# 34.5 KV LINE DIFFERENTIAL SYSTEM
# NAVAL STATION
# GUANTANAMO BAY, CUBA

CONSTRUCTION CONTRACT NO. N62470-99-C-9147

## LIST OF DRAWINGS

| NAVFAC DWG NO | EFD DWG NO | SHEET NO. | TITLE |
|---|---|---|---|
| | | T-1 | TITLE SHEET, DRAWING INDEX, VICINITY MAP |
| | | E-1 | LEGENDS AND ABBREVIATIONS |
| | | E-2 | PILOT WIRE DEMOLITION - MAP 3 |
| | | E-3 | PILOT WIRE DEMOLITION - MAP 5 |
| | | E-4 | PILOT WIRE DEMOLITION - MAP 6 |
| | | E-5 | PILOT WIRE DEMOLITION - MAP 8 |
| | | E-6 | PILOT WIRE DEMOLITION - MAP 9 |
| | | E-7 | PILOT WIRE DEMOLITION - MAP 10 |
| | | E-8 | OPGW PARTIAL SITE PLAN - MAP 3 |
| | | E-9 | OPGW PARTIAL SITE PLAN - MAP 5 |
| | | E-10 | OPGW PARTIAL SITE PLAN - MAP 6 |
| | | E-11 | OPGW PARTIAL SITE PLAN - MAP 7 |
| | | E-12 | OPGW PARTIAL SITE PLAN - MAP 8 |
| | | E-13 | OPGW PARTIAL SITE PLAN - MAP 9 |
| | | E-14 | OPGW PARTIAL SITE PLAN - MAP 10 |
| | | E-15 | PP4 SUBSTATION - SITE PLAN |
| | | E-16 | PP1 SUBSTATION - SITE PLAN |
| | | E-17 | PP2 SUBSTATION - SITE PLAN |
| | | E-18 | TAURMAN AVENUE SUBSTATION - SITE PLAN |
| | | E-19 | CENTRAL AVENUE SUBSTATION - SITE PLAN |
| | | E-20 | VILLAMAR SUBSTATION - SITE PLAN |
| | | E-21 | 34.5 KV ONE-LINE - EXISTING - SHEET 1 |
| | | E-22 | 34.5 KV ONE-LINE - EXISTING - SHEET 2 |
| | | E-23 | 34.5 KV ONE-LINE - EXISTING - SHEET 3 |
| | | E-24 | 34.5 KV ONE-LINE - EXISTING - SHEET 4 |
| | | E-25 | 34.5 KV ONE-LINE - NEW - SHEET 1 |
| | | E-26 | 34.5 KV ONE-LINE - NEW - SHEET 2 |
| | | E-27 | 34.5 KV ONE-LINE - NEW - SHEET 3 |
| | | E-28 | 34.5 KV ONE-LINE - NEW - SHEET 4 |
| | | E-29 | SIMPLIFIED 34.5 KV LINE DIFFERENTIAL DIAGRAM |
| | | E-30 | COMMUNICATION NETWORK DIAGRAM |
| | | E-31 | COMMUNICATION RISER DIAGRAMS - SHEET 1 |
| | | E-32 | COMMUNICATION RISER DIAGRAMS - SHEET 2 |
| | | E-33 | PP4 SUBSTATION - AC SCHEMATIC |
| | | E-34 | PP4 SUBSTATION - DC SCHEMATIC - SHEET 1 |
| | | E-35 | PP4 SUBSTATION - DC SCHEMATIC - SHEET 2 |
| | | E-36 | TYPICAL AC AND DC SCHEMATIC |
| | | E-37 | PP4 SUBSTATION WIRING DETAILS |
| | | E-38 | TYPICAL WIRING DETAILS |
| | | E-39 | SWITCHBOARD MODIFICATIONS - SHEET 1 |
| | | E-40 | SWITCHBOARD MODIFICATIONS - SHEET 2 |
| | | E-41 | FIBER SCHEDULE |
| | | E-42 | POLE SCHEDULES - SHEET 1 |
| | | E-43 | POLE SCHEDULES - SHEET 2 |
| | | E-44 | POLE SCHEDULES - SHEET 3 |
| | | E-45 | POLE SCHEDULES - SHEET 4 |
| | | E-46 | CONDUCTOR SAG AND GUY LEAD SCHEDULES |
| | | E-47 | CONSTRUCTION DETAILS - SHEET 1 |
| | | E-48 | CONSTRUCTION DETAILS - SHEET 2 |
| | | E-49 | CONSTRUCTION DETAILS - SHEET 3 |
| | | E-50 | COMMUNICATION CABINET DETAILS |

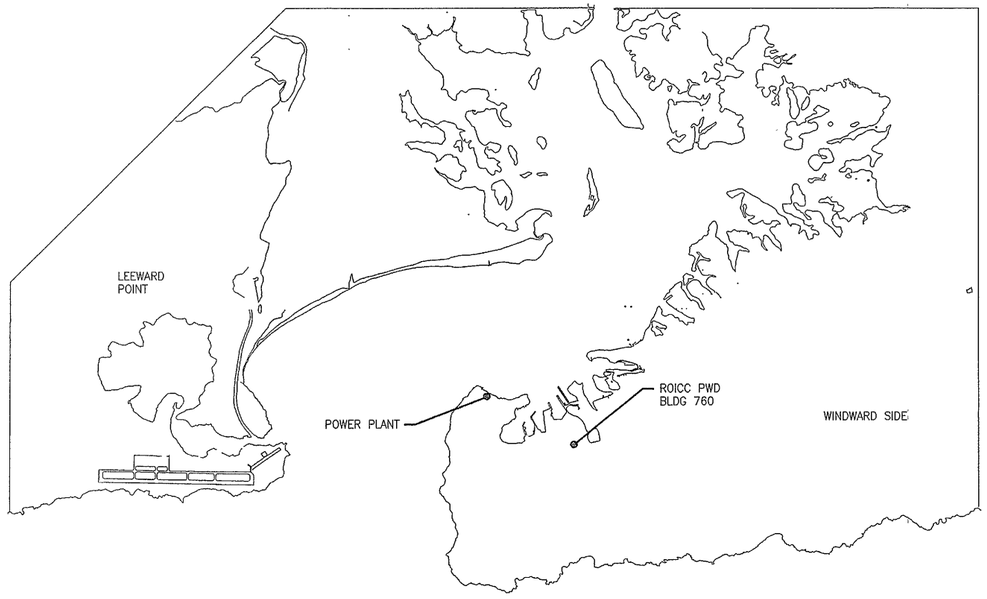


VICINITY MAP

| REVDATE | DESCRIPTION | DATE | APPR |
|---|---|---|---|
| | | | |

Stanley Consultants INC.

SEAL

APPROVED
ACTIVITY - SATISFACTORY TO
DATE
APPROVED
FOR EFD FOR COMMANDER NAVFAC
DATE

| A/E | EFD |
|---|---|
| MLG | DESIGN |
| RJH | DRAWN |
| DPJ | REVIEW |
| MLG | QC |
| | CHIEF ARCH./ ENGR. |

PROJECT MANAGER
FIRE PROTECTION
BRANCH MANAGER
DESIGN DIRECTOR

DEPARTMENT OF THE NAVY
NAVAL FACILITIES ENGINEERING COMMAND
NORFOLK, VIRGINIA
ATLANTIC DIVISION
NAVAL STATION
U.S. NAVAL STATION
GUANTANAMO BAY, CUBA

34.5 KV LINE DIFFERENTIAL SYSTEM

TITLE SHEET, DRAWING INDEX, VICINITY MAP

CODE ID. NO. 80091 | SIZE D

SCALE: NONE
EFD NO.
STA. PROJ. NO. R6-95R1
SPEC. NO.
CONSTR. CONTR. NO. N62470-99-C-9147
NAVFAC DRAWING NO. 4501368
SHEET 1 OF 51

T-1

DRAWING REVISION SEPT 2001

LICENSED PROFESSIONAL ENGINEER
MICHAEL L GOOD 9905
IOWA

I HEREBY CERTIFY THAT REVISION 0 TO THE PORTION OF THIS TECHNICAL SUBMISSION DESCRIBED BELOW WAS PREPARED BY ME OR UNDER MY DIRECT PERSONAL SUPERVISION AND RESPONSIBLE CHARGE. I AM A DULY LICENSED PROFESSIONAL ENGINEER UNDER THE LAWS OF THE STATE OF IOWA.

MICHAEL L. GOOD 08-20-03

MY LICENSE RENEWAL DATE IS 12/31/03.
PAGES OR SHEETS COVERED BY THIS SEAL:
T-1, E-1 THRU E-50

## ELECTRICAL GUIDE LEGEND – (EXTERIOR – OVERHEAD)

- FOSE — FIBER OPTIC SPLICE ENCLOSURE
- ● — POWER POLE (HEIGHT AND CLASS AS INDICATED)
- ● R — REMOVE EXISTING AND PROVIDE NEW POWER POLE (HEIGHT AND CLASS AS INDICATED)
- O — EXISTING POWER POLE (HEIGHT AND CLASS AS INDICATED)
- ⊠ — REMOVE EXISTING POWER POLE (HEIGHT AND CLASS AS INDICATED)
- 2 — DOWN GUY AND ANCHOR – QUANTITY AS INDICATED IF OTHER THAN ONE
- 2 — SPAN GUY AND ANCHOR – QUANTITY AS INDICATED IF OTHER THAN ONE
- REMOVE EXISTING 5/16" EHS STATIC ON EXISTING 34.5 KV LINE AND PROVIDE NEW OPGW
- OPGW — OPTICAL GROUND WIRE
- 34.5 — 34.5 KV, 3 PHASE, 3 WIRE CIRCUIT 3/0 CU, UNLESS OTHERWISE NOTED
- 34.5 — REMOVE EXISTING 34.5 KV – 3/0 CU
- PW — REMOVE EXISTING 25 PR PILOT WIRE CABLE
- 2–PW — REMOVE EXISTING 2–25 PR PILOT WIRE CABLE
- G — REMOVE EXISTING ONE WIRE GROUND (STATIC) 5/16" STEEL

## ELECTRICAL GUIDE LEGEND – (ONE–LINE DIAGRAMS)

- CABLE OR BUS, TYPE AND CHARACTERISTICS AS INDICATED
- EXISTING CABLE OR BUS, TYPE AND CHARACTERISTICS AS INDICATED
- CONTROL CIRCUIT
- EXISTING CONTROL CIRCUIT
- FUSE
- POTENTIAL TRANSFORMER
- CURRENT TRANSFORMER
- GROUNDING ELECTRODE CONNECTION
- MEDIUM VOLTAGE CIRCUIT BREAKER, LOCATION OF CONTROL PANEL AS SHOWN
- DISCONNECT SWITCH
- (A) AMMETER
- (V) VOLTMETER
- (S) SYNCHROSCOPE
- (51) 3 — RELAY AND ANSI CONTROL FUNCTION SYMBOL, NUMBER OUTSIDE CIRCLE INDICATES QUANTITY IF GREATER THAN 1
- AS — AMMETER SWITCH
- VS — VOLTMETER SWITCH
- SS — SYNCHRONIZING SWITCH
- 85 / OCB 602 — DEVICE / DEVICE LOCATION

## ANSI CONTROL FUNCTION SYMBOLS

- (25) SYNCHRONIZING RELAY
- (26) TRANSFORMER THERMAL DEVICE
- (27) UNDER VOLTAGE RELAY
- (32) REVERSE POWER RELAY
- (51) TIME OVERCURRENT RELAY
- (51N) TIME OVERCURRENT RELAY, NEUTRAL
- (67) DIRECTIONAL OVERCURRENT RELAY
- (67N) DIRECTIONAL OVERCURRENT RELAY, NEUTRAL
- (81) FREQUENCY RELAY
- (85) PILOT WIRE RELAY
- (86) LOCKOUT RELAY
- (87B) DIFFERENTIAL RELAY, BUS
- (87L) DIFFERENTIAL RELAY, LINE
- (87T) DIFFERENTIAL RELAY, TRANSFORMER

## ABBREVIATIONS:

| | |
|---|---|
| BRKT | BRACKET |
| C | CONDUIT |
| CKT | CIRCUIT |
| CT | CURRENT TRANSFORMER |
| DE | DEADEND |
| DDE | DOUBLE DEADEND |
| DS | DOUBLE SUSPENSION |
| DPR | DISTRIBUTION PROTECTION RELAY |
| ENCL | ENCLOSURE |
| EXIST | EXISTING |
| EXT | EXTENSION |
| FO | FIBER OPTICS |
| FOSE | FIBER OPTIC SPLICE ENCLOSURE |
| FPR | FEEDER PROTECTION RELAY |
| GCB | GAS CIRCUIT BREAKER |
| LPR | LINE PROTECTION RELAY |
| OCB | OIL CIRCUIT BREAKER |
| OH | OVERHEAD |
| OPGW | OPTICAL GROUNDWIRE |
| OSP | OUTSIDE PLANT |
| PH | PHASE |
| SS | SINGLE SUSPENSION |
| STR | STRUCTURE |
| TPR | TRANSFORMER PROTECTION RELAY |
| VCB | VACUUM CIRCUIT BREAKER |
| XFMR | TRANSFORMER |

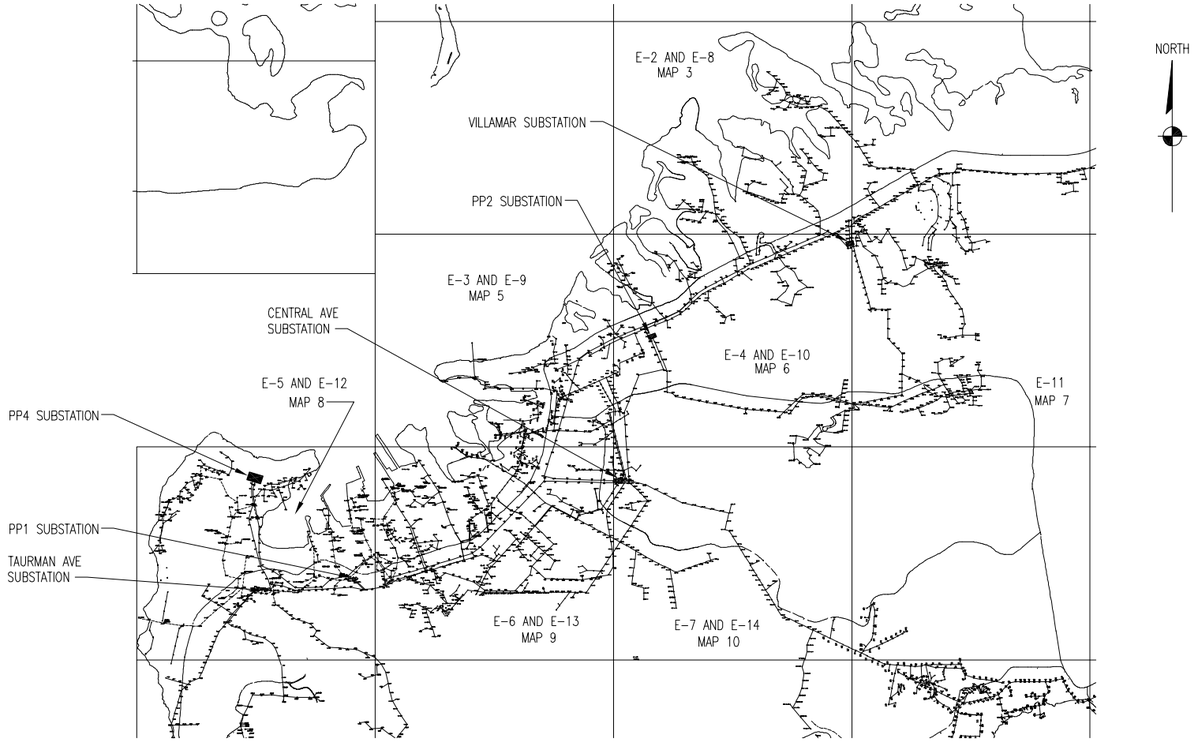


SITE PLAN KEY

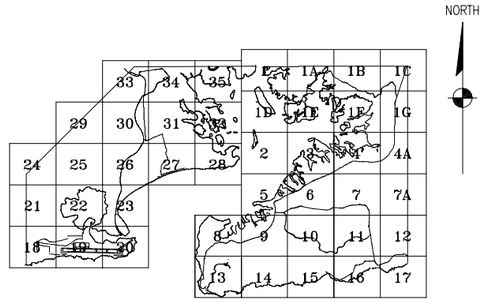


GRID MAP KEY

## GENERAL NOTES:

1. REMOVE EXISTING 5/16" EHS STATIC WIRE AND PROVIDE OPTICAL GROUNDWIRE (OPGW) ON EXISTING 34.5 KV TRANSMISSION LINES AS FOLLOWS:

| | |
|---|---|
| A. CENTRAL AVE SUBSTATION TO VILLAMAR SUBSTATION | 48 FIBERS |
| B. VILLAMAR SUBSTATION TO PP2 SUBSTATION | 48 FIBERS |
| C. PP2 SUBSTATION TO CENTRAL AVE SUBSTATION | 48 FIBERS |
| D. CENTRAL AVE SUBSTATION TO PP1 SUBSTATION | 72 FIBERS |
| E. PP1 SUBSTATION TO TAURMAN AVE SUBSTATION | 72 FIBERS |
| F. CENTRAL AVE SUBSTATION TO PP4 SUBSTATION | 72 FIBERS |
| G. TAURMAN AVE SUBSTATION TO PP4 SUBSTATION | 72 FIBERS |

2. SUBSTATIONS SHALL CONTINUE TO SERVE LOAD DURING CONSTRUCTION. ONLY ONE 34.5 KV CIRCUIT MAY BE TAKEN OUT OF SERVICE AT A TIME. 34.5 KV LOADS (NEX MALL AND SATCOM) SHALL REMAIN IN SERVICE EXCEPT FOR TEMPORARY INTERRUPTIONS AND FINAL CUTOVER.

APPR | DATE | DESCRIPTION | SYM

Stanley Consultants INC.

SEAL

APPROVED

ACTIVITY – SATISFACTORY TO

DATE

APPROVED

FOR EFD FOR COMMANDER NAVFAC

DATE

| A/E | | EFD |
|---|---|---|
| MLG | DESIGN | |
| RJH | DRAWN | |
| DPJ | REVIEW | |
| MLG | QC | |
| | CHIEF ARCH./ ENGR. | |

PROJECT MANAGER

FIRE PROTECTION

BRANCH MANAGER

DESIGN DIRECTOR

DEPARTMENT OF THE NAVY
NAVAL FACILITIES ENGINEERING COMMAND
ATLANTIC DIVISION
NORFOLK, VIRGINIA
NAVAL STATION
U.S. NAVAL STATION
GUANTANAMO BAY, CUBA

# 34.5 KV LINE DIFFERENTIAL SYSTEM

LEGENDS AND ABBREVIATIONS

CODE ID. NO. 80091 | SIZE D

SCALE: NONE

EFD NO.

STA. PROJ. NO. R6-95R1

SPEC. NO.

CONSTR. CONTR. NO.
N62470-99-C-9147

NAVFAC DRAWING NO.
4501369

SHEET 2 OF 51

E-1

DRAWFORM REVISION SEPT 2001

REVDATE

FOR CONTINUATION SEE MAP 6 ON DRAWING E-4

| APPR | DATE | DESCRIPTION | SYM |
|---|---|---|---|
| | | | |

Stanley Consultants INC.

SEAL

APPROVED

ACTIVITY – SATISFACTORY TO

DATE

APPROVED

FOR EFD FOR COMMANDER NAVFAC

DATE

| A/E | EFD |
|---|---|
| MLG | DESIGN |
| RJH | DRAWN |
| DPJ | REVIEW |
| MLG | QC |
| | CHIEF ARCH./ ENGR. |

PROJECT MANAGER

FIRE PROTECTION

BRANCH MANAGER

DESIGN DIRECTOR

DEPARTMENT OF THE NAVY
NAVAL FACILITIES ENGINEERING COMMAND
NORFOLK, VIRGINIA
NAVAL STATION
ATLANTIC DIVISION
U.S. NAVAL STATION
GUANTANAMO BAY, CUBA

# 34.5 KV LINE DIFFERENTIAL SYSTEM

## PILOT WIRE DEMOLITION – MAP 3

| | |
|---|---|
| CODE ID. NO. 80091 | SIZE D |
| SCALE: | 1"=300' |
| EFD NO. | |
| STA. PROJ. NO. | R6-95R1 |
| SPEC. NO. | |
| CONSTR. CONTR. NO. | N62470-99-C-9147 |
| NAVFAC DRAWING NO. | 4501370 |
| SHEET | 3 OF 51 |

E-2

DRAWFORM REVISION SEPT 2001

REVDATE

FOR CONTINUATION SEE MAP 6 ON DRAWING E-4

FOR CONTINUATION SEE MAP 9 DRAWING E-6

NORTH

1"=300' 0' 300' 600' 900' 1200' 1500'

| SYM. | DESCRIPTION | DATE | APPR |
|---|---|---|---|

Stanley Consultants INC.

SEAL

APPROVED

ACTIVITY – SATISFACTORY TO

DATE

APPROVED

FOR EFD FOR COMMANDER NAVFAC

DATE

| A/E | | EFD |
|---|---|---|
| MLG | DESIGN | |
| RJH | DRAWN | |
| DPJ | REVIEW | |
| MLG | QC | |
| | CHIEF ARCH./ ENGR. | |

PROJECT MANAGER
FIRE PROTECTION
BRANCH MANAGER
DESIGN DIRECTOR

DEPARTMENT OF THE NAVY
NAVAL FACILITIES ENGINEERING COMMAND
ATLANTIC DIVISION
NAVAL STATION NORFOLK, VIRGINIA

U.S. NAVAL STATION GUANTANAMO BAY, CUBA

# 34.5 KV LINE DIFFERENTIAL SYSTEM

## PILOT WIRE DEMOLITION – MAP 5

CODE ID. NO. 80091 SIZE D
SCALE: 1"=300'
EFD NO.
STA. PROJ. NO. R6-95R1
SPEC. NO.
CONSTR. CONTR. NO. N62470-99-C-9147
NAVFAC DRAWING NO. 4501371
SHEET 4 OF 51

E-3

DRAWFORM REVISION SEPT 2001

REVDATE

FOR CONTINUATION SEE MAP 3 ON DRAWING E-2

FOR CONTINUATION SEE MAP 10 ON DRAWING E-7

NOTES:
1. SEE PP2 SUBSTATION SITE PLAN ON DRAWING E-17 FOR PILOT WIRE DEMOLITION INSIDE SUBSTATION.
2. SEE VILLAMAR SUBSTATION SITE PLAN ON DRAWING E-20 FOR PILOT WIRE DEMOLITION INSIDE SUBSTATION.

1"=300' 0' 300' 600' 900' 1200' 1500'

| REV | DATE | DESCRIPTION | APPR |
|---|---|---|---|

Stanley Consultants INC.

SEAL

APPROVED

ACTIVITY – SATISFACTORY TO

DATE

APPROVED

FOR EFD FOR COMMANDER NAVFAC

DATE

| A/E | EFD | |
|---|---|---|
| MLG | | DESIGN |
| RJH | | DRAWN |
| DPJ | | REVIEW |
| MLG | | QC |
| | | CHIEF ARCH./ ENGR. |

PROJECT MANAGER

FIRE PROTECTION

BRANCH MANAGER

DESIGN DIRECTOR

DEPARTMENT OF THE NAVY
NAVAL FACILITIES ENGINEERING COMMAND
NAVAL STATION ATLANTIC DIVISION
NORFOLK, VIRGINIA

U.S. NAVAL STATION GUANTANAMO BAY, CUBA

# 34.5 KV LINE DIFFERENTIAL SYSTEM

## PILOT WIRE DEMOLITION – MAP 6

CODE ID. NO. 80091 | SIZE D

SCALE: 1"=300'

EFD NO.

STA. PROJ. NO. R6-95R1

SPEC. NO.

CONSTR. CONTR. NO. N62470-99-C-9147

NAVFAC DRAWING NO. 4501372

SHEET 5 OF 51

E-4

DRAWFORM REVISION SEPT 2001

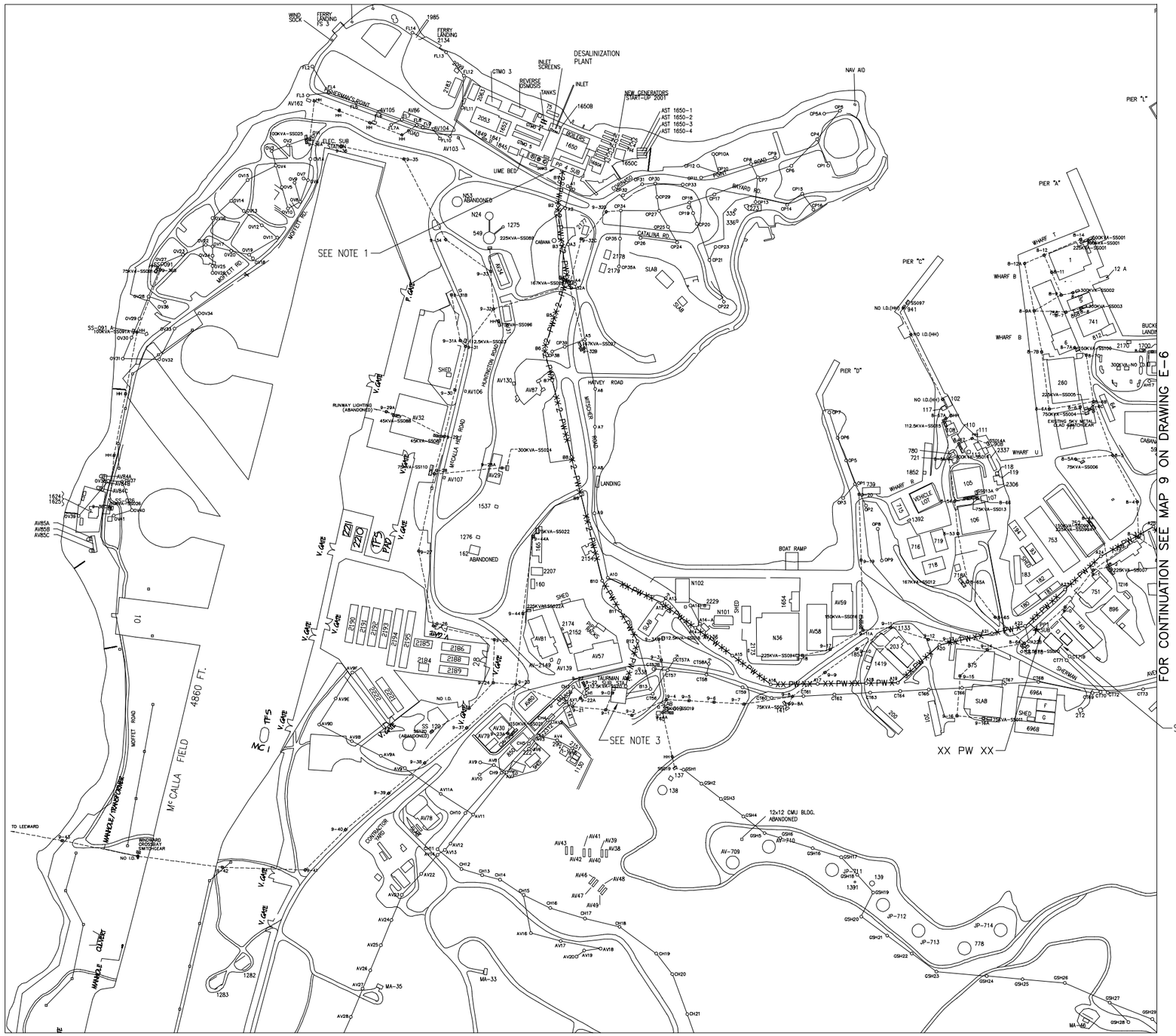


NOTES:

1. SEE PP4 SUBSTATION SITE PLAN ON DRAWING E-15 FOR PILOT WIRE DEMOLITION INSIDE SUBSTATION.
2. SEE PP1 SUBSTATION SITE PLAN ON DRAWING E-16 FOR PILOT WIRE DEMOLITION INSIDE SUBSTATION.
3. SEE TAURMAN AVENUE SUBSTATION SITE PLAN ON DRAWING E-18 FOR PILOT WIRE DEMOLITION INSIDE SUBSTATION.

1"=300' 0' 300' 600' 900' 1200' 1500'

| SYM. | DESCRIPTION | DATE | APPR |
|---|---|---|---|

Stanley Consultants INC.

SEAL

APPROVED

ACTIVITY – SATISFACTORY TO

DATE

APPROVED

FOR EFD FOR COMMANDER NAVFAC

DATE

| A/E | | EFD |
|---|---|---|
| MLG | DESIGN | |
| RJH | DRAWN | |
| DPJ | REVIEW | |
| MLG | QC | |
| | CHIEF ARCH./ ENGR. | |

PROJECT MANAGER

FIRE PROTECTION

BRANCH MANAGER

DESIGN DIRECTOR

DEPARTMENT OF THE NAVY
NAVAL FACILITIES ENGINEERING COMMAND
NAVAL STATION ATLANTIC DIVISION NORFOLK, VIRGINIA
U.S. NAVAL STATION GUANTANAMO BAY, CUBA

# 34.5 KV LINE DIFFERENTIAL SYSTEM

## PILOT WIRE DEMOLITION – MAP 8

CODE ID. NO. 80091 SIZE D

SCALE: 1"=300'

EFD NO.

STA. PROJ. NO. R6-95R1

SPEC. NO.

CONSTR. CONTR. NO. N62470-99-C-9147

NAVFAC DRAWING NO. 4501373

SHEET 6 OF 51

E-5

DRAWFORM REVISION SEPT 2001

REVDATE

FOR CONTINUATION SEE MAP 5 ON DRAWING E-3

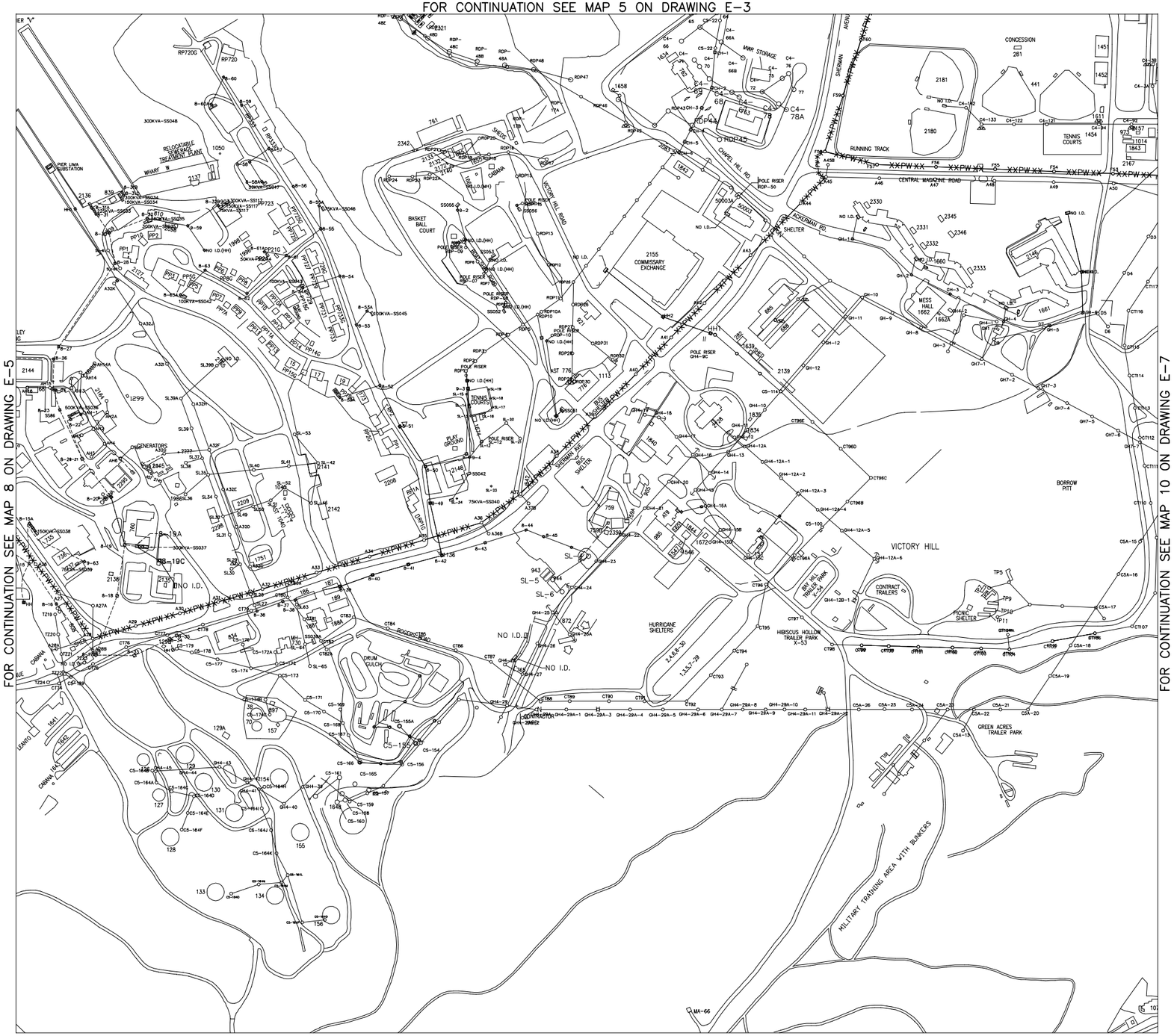


| | | | |
|---|---|---|---|
| APPR | DATE | DESCRIPTION | SYM |

Stanley Consultants INC.

SEAL

APPROVED

ACTIVITY – SATISFACTORY TO

DATE

APPROVED

FOR EFD FOR COMMANDER NAVFAC

DATE

| A/E | EFD |
|---|---|
| MLG | DESIGN |
| RJH | DRAWN |
| DPJ | REVIEW |
| MLG | QC |
| | CHIEF ARCH./ ENGR. |

PROJECT MANAGER

FIRE PROTECTION

BRANCH MANAGER

DESIGN DIRECTOR

DEPARTMENT OF THE NAVY
NAVAL FACILITIES ENGINEERING COMMAND
ATLANTIC DIVISION
NAVAL STATION NORFOLK, VIRGINIA

U.S. NAVAL STATION GUANTANAMO BAY, CUBA

# 34.5 KV LINE DIFFERENTIAL SYSTEM

PILOT WIRE DEMOLITION – MAP 9

CODE ID. NO. 80091 | SIZE D

SCALE: 1"=300'

EFD NO.

STA. PROJ. NO. R6-95R1

SPEC. NO.

CONSTR. CONTR. NO. N62470-99-C-9147

NAVFAC DRAWING NO. 4501374

SHEET 7 OF 51

E-6

DRAWFORM REVISION SEPT 2001

REVDATE

FOR CONTINUATION SEE MAP 6 ON DRAWING E-4

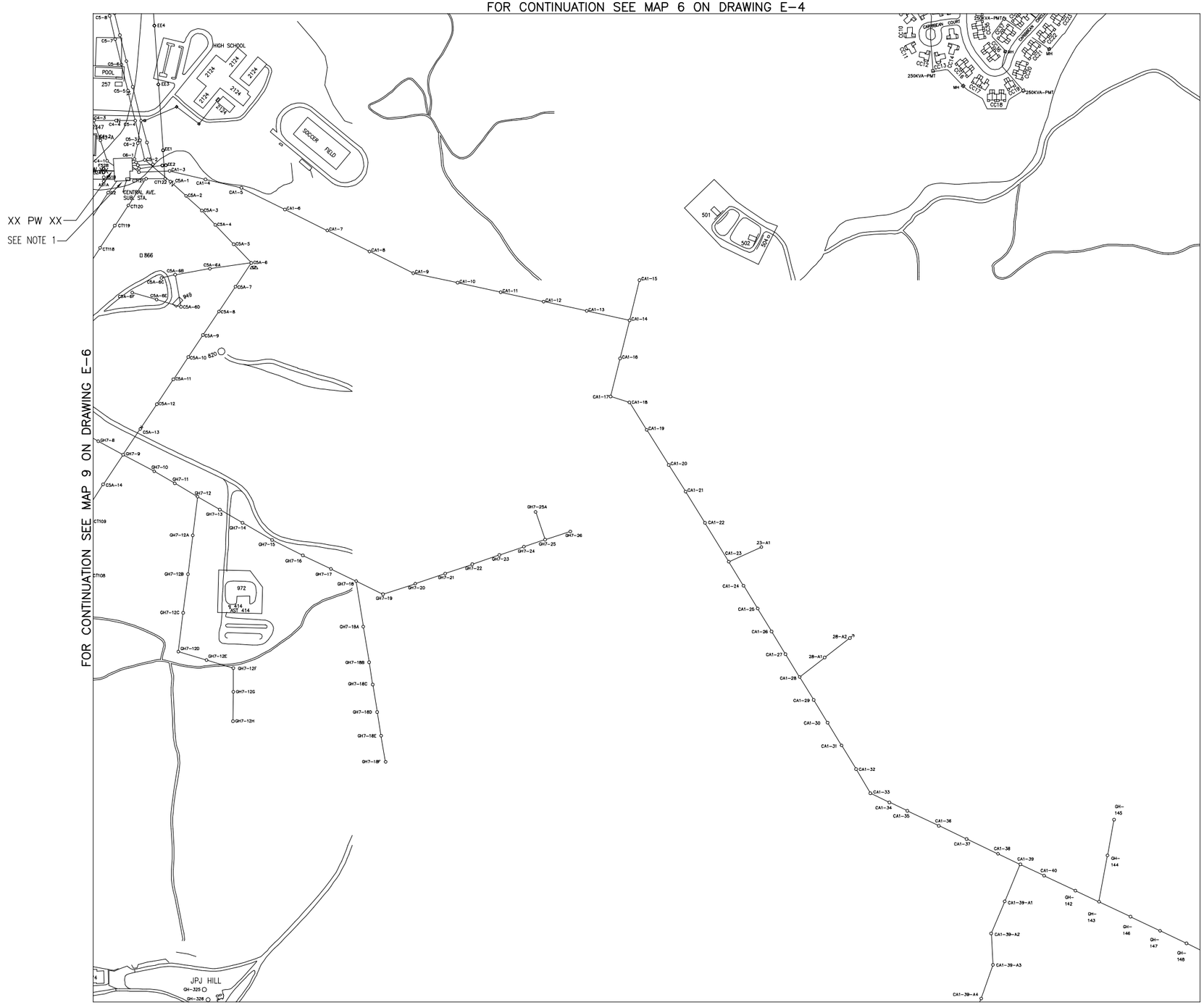


NORTH

NOTES:
1. SEE CENTRAL AVENUE SUBSTATION SITE PLAN ON DRAWING E-19 FOR PILOT WIRE DEMOLITION INSIDE SUBSTATION.

1"=300' 0' 300' 600' 900' 1200' 1500'

| REVDATE | DESCRIPTION | APPR |
|---|---|---|
| | | |

Stanley Consultants INC.

SEAL

APPROVED

ACTIVITY – SATISFACTORY TO

DATE

APPROVED

FOR EFD FOR COMMANDER NAVFAC

DATE

| A/E | EFD |
|---|---|
| MLG | DESIGN |
| RJH | DRAWN |
| DPJ | REVIEW |
| MLG | QC |
| | CHIEF ARCH./ ENGR. |

PROJECT MANAGER

FIRE PROTECTION

BRANCH MANAGER

DESIGN DIRECTOR

DEPARTMENT OF THE NAVY
NAVAL FACILITIES ENGINEERING COMMAND
NORFOLK, VIRGINIA
NAVAL STATION ATLANTIC DIVISION
U.S. NAVAL STATION GUANTANAMO BAY, CUBA

# 34.5 KV LINE DIFFERENTIAL SYSTEM

## PILOT WIRE DEMOLITION – MAP 10

CODE ID. NO. 80091 SIZE D

SCALE: 1"=300'

EFD NO.

STA. PROJ. NO. R6-95R1

SPEC. NO.

CONSTR. CONTR. NO.
N62470-99-C-9147

NAVFAC DRAWING NO.
4501375

SHEET 8 OF 51

E-7

DRAWFORM REVISION SEPT 2001

FOR CONTINUATION SEE MAP 6 ON DRAWING E-10

1"=300' 0' 300' 600' 900' 1200' 1500'

| SYM. | DESCRIPTION | DATE | APPR |
|---|---|---|---|

Stanley Consultants INC.

SEAL

APPROVED

ACTIVITY – SATISFACTORY TO

DATE

APPROVED

FOR EFD FOR COMMANDER NAVFAC

DATE

| A/E | | EFD |
|---|---|---|
| MLG | DESIGN | |
| RJH | DRAWN | |
| DPJ | REVIEW | |
| MLG | QC | |
| | CHIEF ARCH./ ENGR. | |

PROJECT MANAGER

FIRE PROTECTION

BRANCH MANAGER

DESIGN DIRECTOR

DEPARTMENT OF THE NAVY
NAVAL FACILITIES ENGINEERING COMMAND
ATLANTIC DIVISION
NORFOLK, VIRGINIA

NAVAL STATION
U.S. NAVAL STATION
GUANTANAMO BAY, CUBA

# 34.5 KV LINE DIFFERENTIAL SYSTEM

OPGW PARTIAL SITE PLAN – MAP 3

CODE ID. NO. 80091 SIZE D

SCALE: 1"=300'

EFD NO.

STA. PROJ. NO. R6-95R1

SPEC. NO.

CONSTR. CONTR. NO.
N62470-99-C-9147

NAVFAC DRAWING NO.
4501376

SHEET 9 OF 51

E-8

DRAWFORM REVISION SEPT 2001

REVDATE

| SYM. | DESCRIPTION | DATE | APPR |
|---|---|---|---|

Stanley Consultants INC.

SEAL

APPROVED

ACTIVITY – SATISFACTORY TO

DATE

APPROVED

FOR EFD FOR COMMANDER NAVFAC

DATE

| A/E | | EFD |
|---|---|---|
| MLG | DESIGN | |
| RJH | DRAWN | |
| DPJ | REVIEW | |
| MLG | QC | |
| | CHIEF ARCH./ ENGR. | |

PROJECT MANAGER

FIRE PROTECTION

BRANCH MANAGER

DESIGN DIRECTOR

DEPARTMENT OF THE NAVY
NAVAL FACILITIES ENGINEERING COMMAND
ATLANTIC DIVISION
NORFOLK, VIRGINIA

NAVAL STATION
U.S. NAVAL STATION
GUANTANAMO BAY, CUBA

# 34.5 KV LINE DIFFERENTIAL SYSTEM

OPGW PARTIAL SITE PLAN – MAP 5

CODE ID. NO. 80091 | SIZE D

SCALE: 1"=300'

EFD NO.

STA. PROJ. NO. R6-95R1

SPEC. NO.

CONSTR. CONTR. NO. N62470-99-C-9147

NAVFAC DRAWING NO. 4501377

SHEET 10 OF 51

E-9

DRAWFORM REVISION SEPT 2001

REVDATE

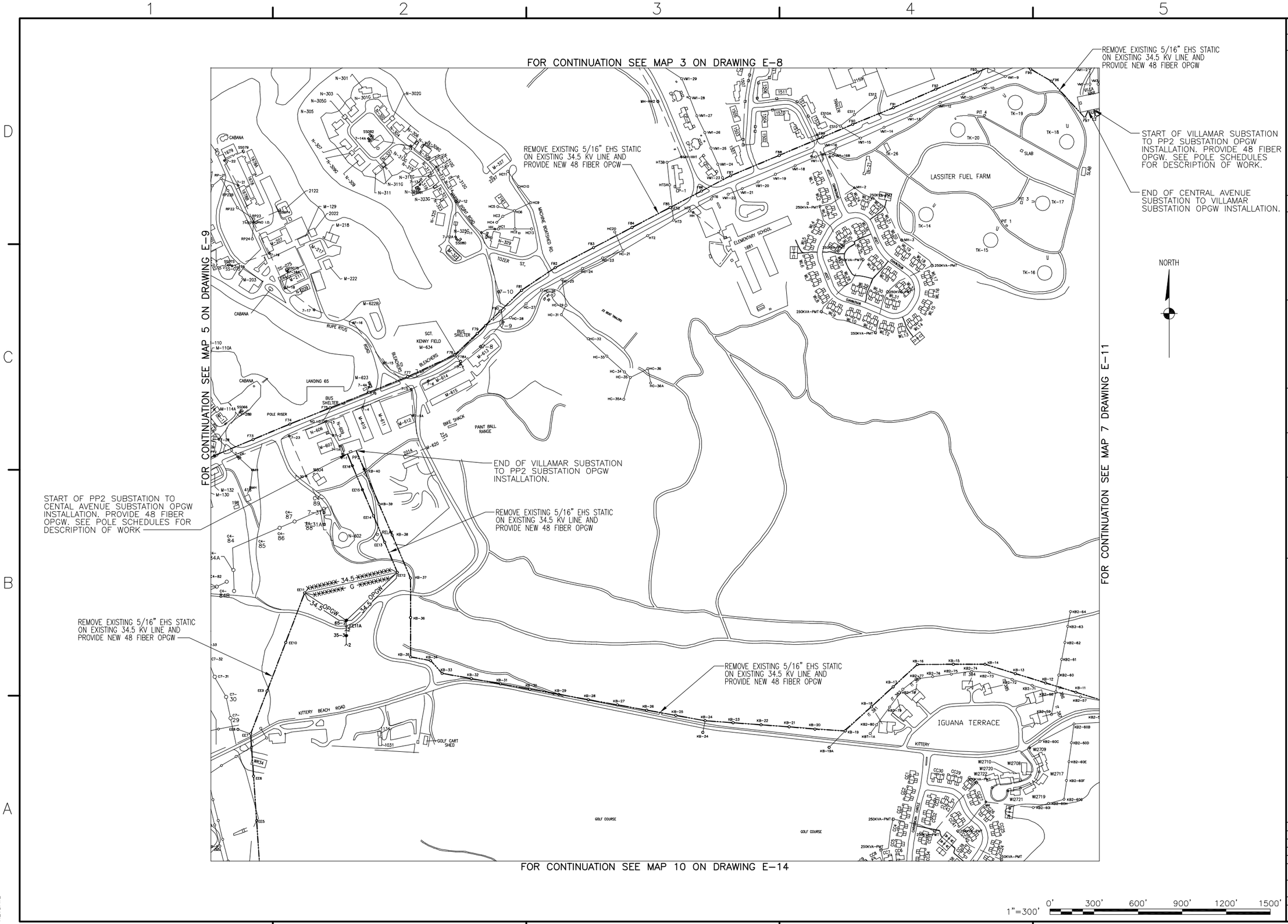


Stanley Consultants INC.

APPROVED

ACTIVITY – SATISFACTORY TO

DATE

APPROVED

FOR EFD FOR COMMANDER NAVFAC

DATE

| A/E | EFD |
|---|---|
| MLG | DESIGN |
| RJH | DRAWN |
| DPJ | REVIEW |
| MLG | QC |
| | CHIEF ARCH./ ENGR. |

PROJECT MANAGER

FIRE PROTECTION

BRANCH MANAGER

DESIGN DIRECTOR

DEPARTMENT OF THE NAVY
NAVAL FACILITIES ENGINEERING COMMAND
ATLANTIC DIVISION
NORFOLK, VIRGINIA
NAVAL STATION
U.S. NAVAL STATION
GUANTANAMO BAY, CUBA

# 34.5 KV LINE DIFFERENTIAL SYSTEM

OPGW PARTIAL SITE PLAN – MAP 6

CODE ID. NO. 80091 SIZE D

SCALE: 1"=300'

EFD NO.

STA. PROJ. NO. R6-95R1

SPEC. NO.

CONSTR. CONTR. NO. N62470-99-C-9147

NAVFAC DRAWING NO. 4501378

SHEET 11 OF 51

E-10

DRAWFORM REVISION SEPT 2001

REV/DATE

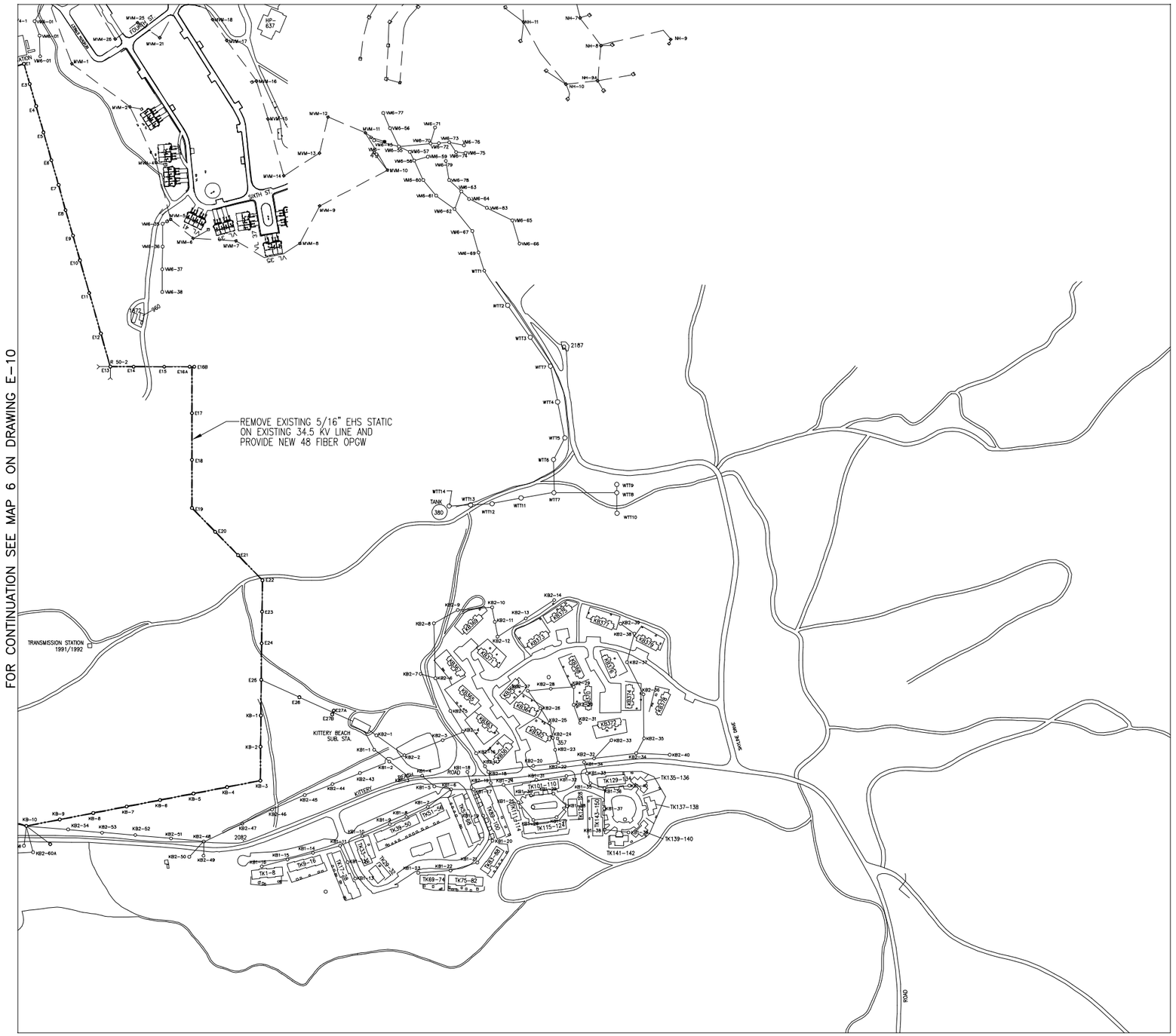


NORTH

1"=300' 0' 300' 600' 900' 1200' 1500'

| SYM. | DESCRIPTION | DATE | APPR |
|---|---|---|---|

Stanley Consultants INC.

SEAL

APPROVED

ACTIVITY – SATISFACTORY TO

DATE

APPROVED

FOR EFD FOR COMMANDER NAVFAC

DATE

| A/E | | EFD |
|---|---|---|
| MLG | DESIGN | |
| RJH | DRAWN | |
| DPJ | REVIEW | |
| MLG | QC | |
| | CHIEF ARCH./ ENGR. | |

PROJECT MANAGER

FIRE PROTECTION

BRANCH MANAGER

DESIGN DIRECTOR

DEPARTMENT OF THE NAVY
NAVAL FACILITIES ENGINEERING COMMAND
ATLANTIC DIVISION
NORFOLK, VIRGINIA
NAVAL STATION
U.S. NAVAL STATION
GUANTANAMO BAY, CUBA

# 34.5 KV LINE DIFFERENTIAL SYSTEM

OPGW PARTIAL SITE PLAN – MAP 7

CODE ID. NO. 80091 SIZE D

SCALE: 1"=300'

EFD NO.

STA. PROJ. NO. R6-95R1

SPEC. NO.

CONSTR. CONTR. NO.
N62470-99-C-9147

NAVFAC DRAWING NO.
4501379

SHEET 12 OF 51

E-11

DRAWFORM REVISION SEPT 2001

REVDATE

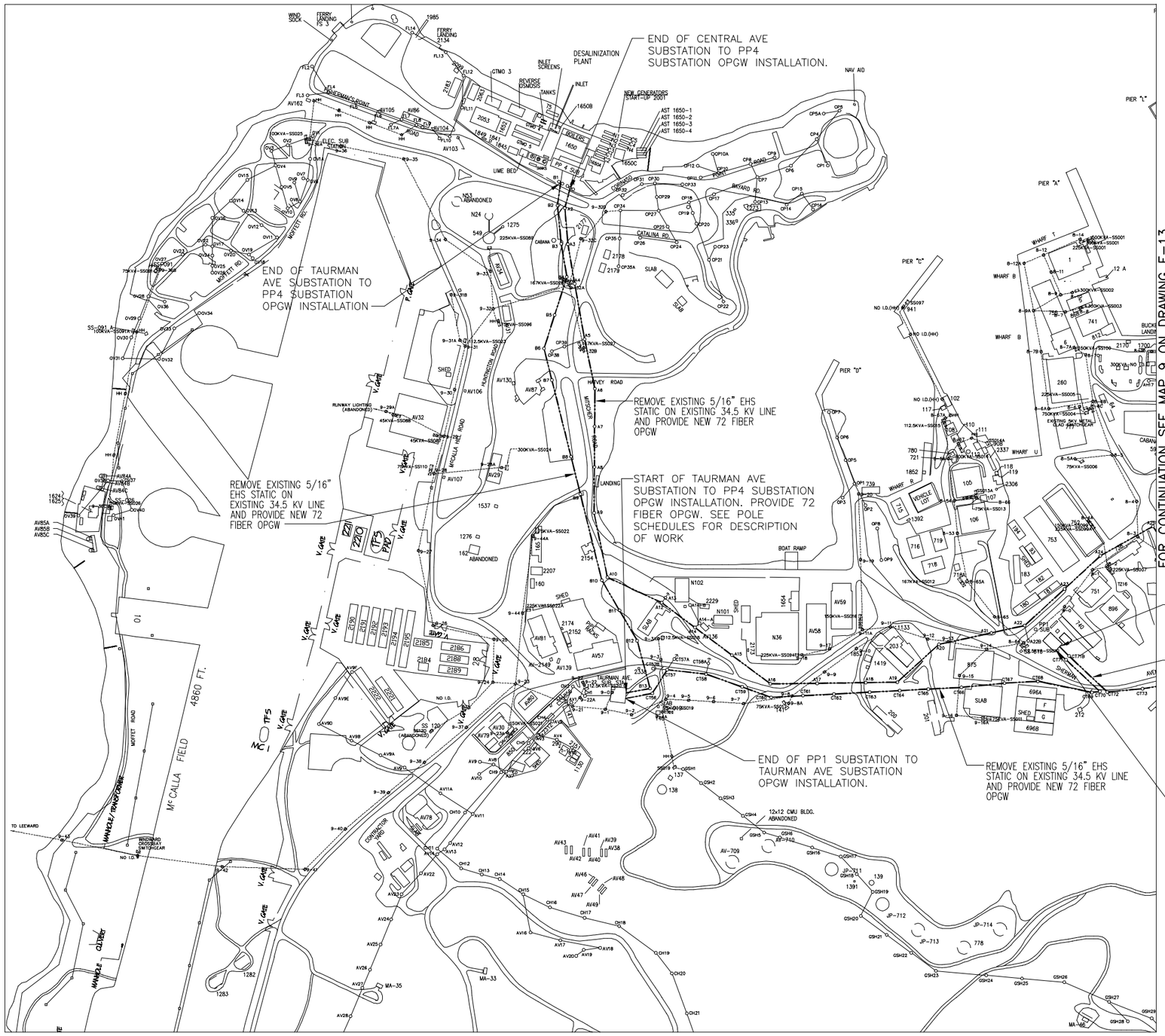


| REVDATE | DESCRIPTION | DATE | APPR |
|---|---|---|---|
| | | | |

Stanley Consultants INC.

APPROVED

ACTIVITY – SATISFACTORY TO

DATE

APPROVED

FOR EFD FOR COMMANDER NAVFAC

DATE

| A/E | EFD |
|---|---|
| MLG | DESIGN |
| RJH | DRAWN |
| DPJ | REVIEW |
| MLG | QC |
| | CHIEF ARCH./ ENGR. |

PROJECT MANAGER

FIRE PROTECTION

BRANCH MANAGER

DESIGN DIRECTOR

DEPARTMENT OF THE NAVY
NAVAL FACILITIES ENGINEERING COMMAND
ATLANTIC DIVISION
NORFOLK, VIRGINIA
NAVAL STATION
U.S. NAVAL STATION
GUANTANAMO BAY, CUBA

# 34.5 KV LINE DIFFERENTIAL SYSTEM

OPGW PARTIAL SITE PLAN – MAP 8

| | |
|---|---|
| CODE ID. NO. 80091 | SIZE D |
| SCALE: 1"=300' | |
| EFD NO. | |
| STA. PROJ. NO. R6-95R1 | |
| SPEC. NO. | |
| CONSTR. CONTR. NO. N62470-99-C-9147 | |
| NAVFAC DRAWING NO. 4501380 | |
| SHEET 13 OF 51 | |

E-12

DRAWFORM REVISION SEPT 2001

FOR CONTINUATION SEE MAP 5 ON DRAWING E-9

FOR CONTINUATION SEE MAP 8 ON DRAWING E-12

FOR CONTINUATION SEE MAP 10 ON DRAWING E-14

REMOVE EXISTING 5/16" EHS STATIC ON EXISTING 34.5 KV LINE AND PROVIDE NEW 48 FIBER OPGW

REMOVE EXISTING 5/16" EHS STATIC ON EXISTING 34.5 KV LINE AND PROVIDE NEW 72 FIBER OPGW

REMOVE EXISTING 5/16" EHS STATIC ON EXISTING 34.5 KV LINE AND PROVIDE NEW 72 FIBER OPGW

NORTH

1"=300' 0' 300' 600' 900' 1200' 1500'

| NO. | DESCRIPTION | DATE | APPR |
|---|---|---|---|
| | | | |

Stanley Consultants INC.

SEAL

APPROVED

ACTIVITY – SATISFACTORY TO

DATE

APPROVED

FOR EFD FOR COMMANDER NAVFAC

DATE

| A/E | | EFD |
|---|---|---|
| MLG | DESIGN | |
| RJH | DRAWN | |
| DPJ | REVIEW | |
| MLG | QC | |
| | CHIEF ARCH./ ENGR. | |

PROJECT MANAGER

FIRE PROTECTION

BRANCH MANAGER

DESIGN DIRECTOR

DEPARTMENT OF THE NAVY
NAVAL STATION
NAVAL FACILITIES ENGINEERING COMMAND
ATLANTIC DIVISION
NORFOLK, VIRGINIA

U.S. NAVAL STATION
GUANTANAMO BAY, CUBA

# 34.5 KV LINE DIFFERENTIAL SYSTEM

OPGW PARTIAL SITE PLAN – MAP 9

CODE ID. NO. 80091 | SIZE D

SCALE: 1"=300'

EFD NO.

STA. PROJ. NO. R6-95R1

SPEC. NO.

CONSTR. CONTR. NO.
N62470-99-C-9147

NAVFAC DRAWING NO.
4501381

SHEET 14 OF 51

E-13

DRAWFORM REVISION SEPT 2001

REVDATE

END OF PP2 SUBSTATION TO CENTRAL AVE SUBSTATION OPGW INSTALLATION

START OF CENTRAL AVE SUBSTATION TO VILLAMAR SUBSTATION OPGW INSTALLATION. PROVIDE 48 FIBER OPGW. SEE POLE SCHEDULES FOR DESCRIPTION OF WORK

START OF CENTRAL AVE SUBSTATION TO PP4 SUBSTATION OPGW INSTALLATION. PROVIDE 72 FIBER OPGW. SEE POLE SCHEDULES FOR DESCRIPTION OF WORK

START OF CENTRAL AVE SUBSTATION TO PP1 SUBSTATION OPGW INSTALLATION. PROVIDE 72 FIBER OPGW. SEE POLE SCHEDULES FOR DESCRIPTION OF WORK

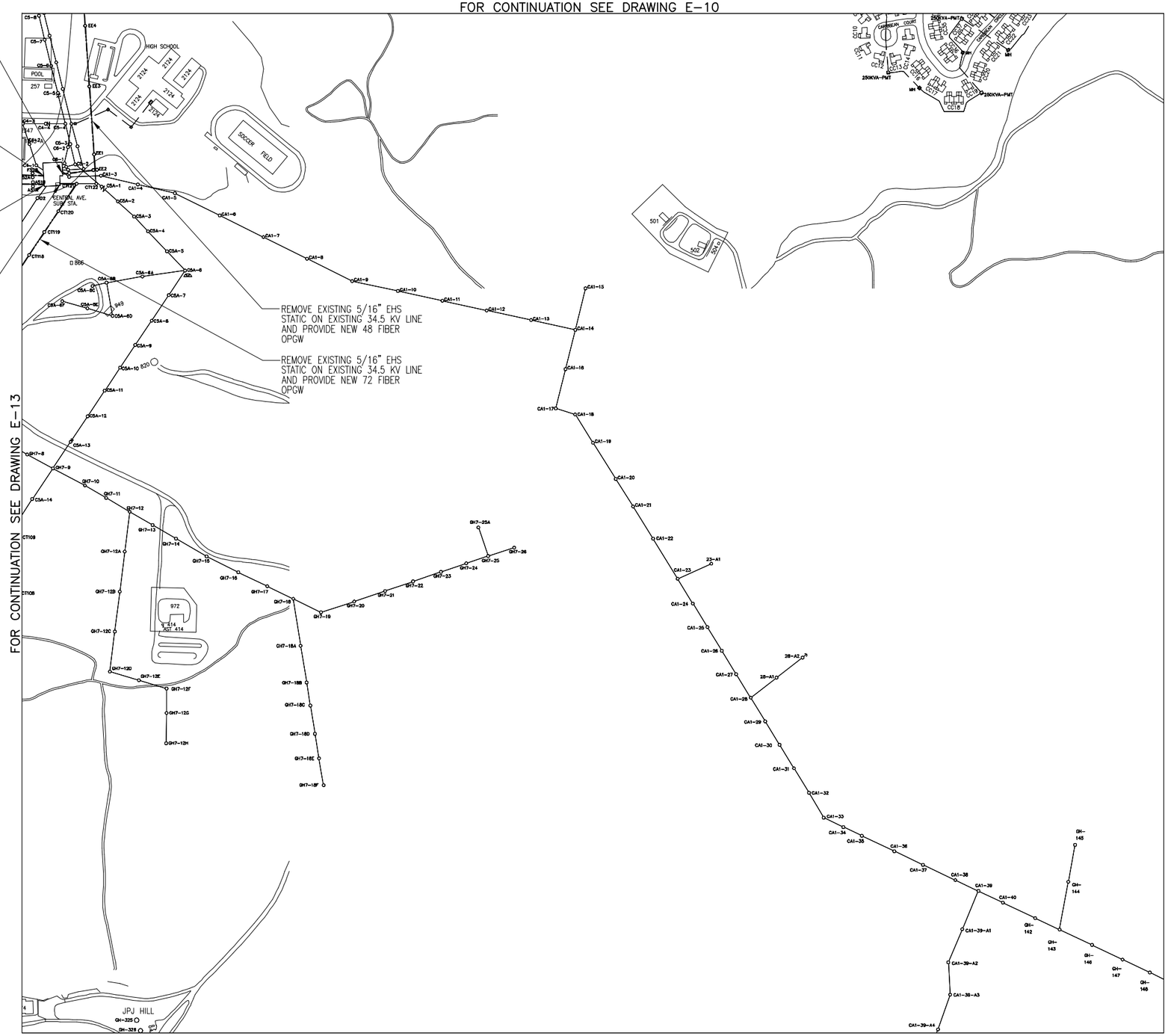


1"=300' 0' 300' 600' 900' 1200' 1500'

| SYM. | DESCRIPTION | DATE | APPR |
|---|---|---|---|

Stanley Consultants INC.

SEAL

APPROVED

ACTIVITY – SATISFACTORY TO

DATE

APPROVED

FOR EFD FOR COMMANDER NAVFAC

DATE

| A/E | | EFD |
|---|---|---|
| MLG | DESIGN | |
| RJH | DRAWN | |
| DPJ | REVIEW | |
| MLG | QC | |
| | CHIEF ARCH./ ENGR. | |

PROJECT MANAGER

FIRE PROTECTION

BRANCH MANAGER

DESIGN DIRECTOR

DEPARTMENT OF THE NAVY
NAVAL FACILITIES ENGINEERING COMMAND
ATLANTIC DIVISION
NORFOLK, VIRGINIA
NAVAL STATION
U.S. NAVAL STATION GUANTANAMO BAY, CUBA

# 34.5 KV LINE DIFFERENTIAL SYSTEM

OPGW PARTIAL SITE PLAN – MAP 10

CODE ID. NO. 80091 | SIZE D

SCALE: 1"=300'

EFD NO.

STA. PROJ. NO. R6-95R1

SPEC. NO.

CONSTR. CONTR. NO. N62470-99-C-9147

NAVFAC DRAWING NO. 4501382

SHEET 15 OF 51

E-14

DRAWFORM REVISION SEPT 2001

REVDATE

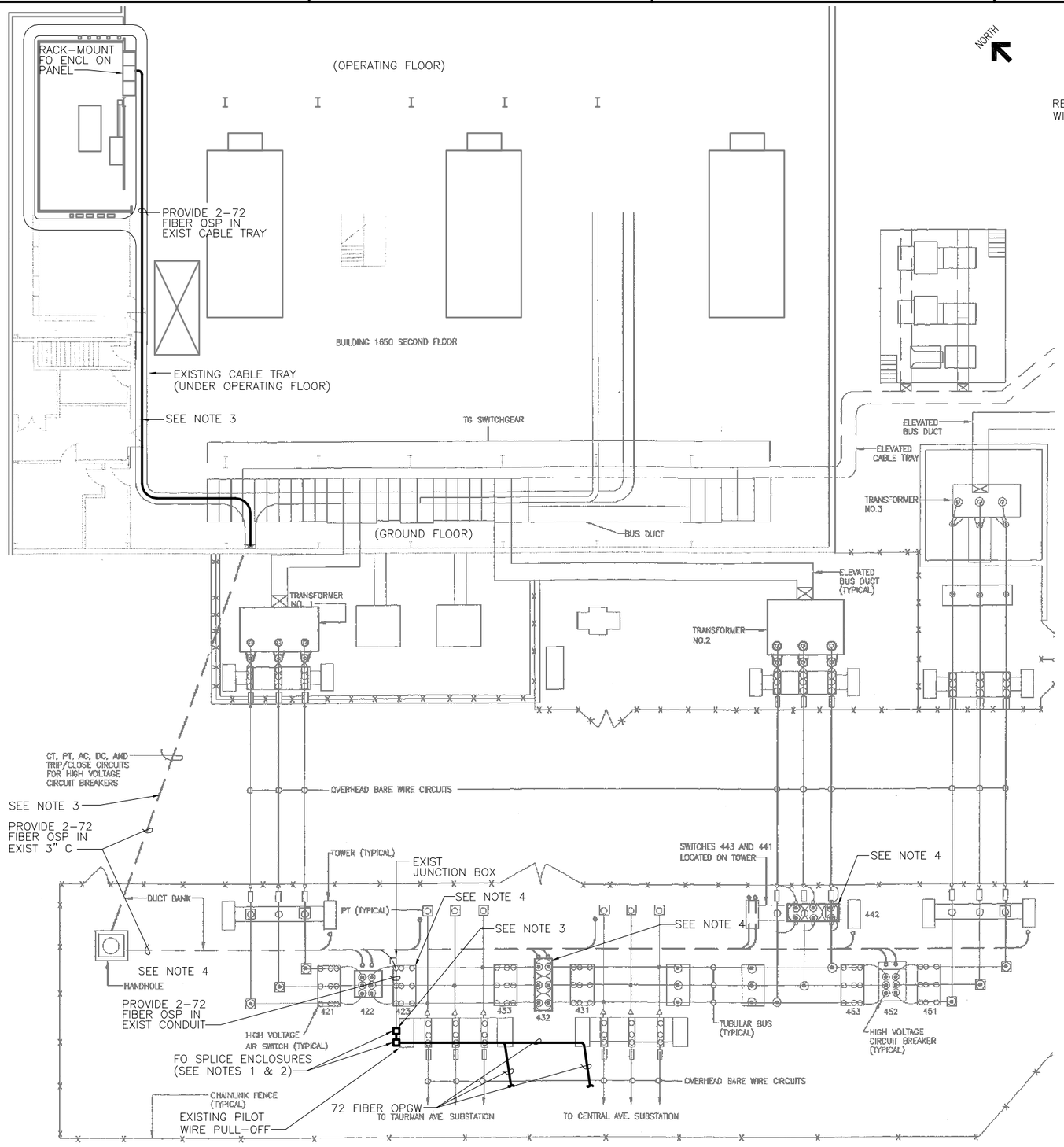


ELECTRICAL SUBSTATION PLAN

OPGW TO TAURMAN AVENUE DEADEND STRUCTURE

OPGW TO CENTRAL AVENUE DEADEND STRUCTURE

NOTES:

1. PROVIDE FO SPLICE ENCLOSURES ON NW FACE OF STRUCTURE. PROVIDE BRACKETS AND HARDWARE AS REQUIRED FOR MOUNTING. PROVIDE 12" X 12" X 8" NEMA 3R JUNCTION BOX BELOW FO SPLICE ENCLOSURES. CONNECT 1-1"C TO BOTTOM OF EACH FO SPLICE ENCLOSURE. SEE DRAWING E-45 AND E-48 FOR OPGW AND FO SPLICE ENCLOSURE ASSEMBLIES AND DETAILS. SEE DRAWING E-31 FOR COMMUNICATION RISER DIAGRAM.
2. REMOVE ONE CONDUIT BETWEEN EXISTING JUNCTION BOX AND PILOT WIRE PULL-OFF. REMOVE PILOT WIRE CONDUIT ABOVE NEW JUNCTION BOX.
3. REMOVE 2 EXISTING PILOT WIRES IN CONDIUT AND CABLE TRAY BETWEEN PILOT WIRE OH PULL-OFF IN 34.5 KV SWITCHYARD AND PILOT WIRE CABINET IN PLANT. LOCATE AND REMOVE PILOT WIRE CABINET.
4. PROVIDE BUSHING CT'S ON EXISTING VACUUM BREAKERS. SEE DRAWING E-28.
5. USE REDUCED TENSION SPAN BETWEEN DEADEND STRUCTURES. INSTALL WITH 2' SAG.

REVDATE

| APPR | DATE | DESCRIPTION | SYM |
|---|---|---|---|

Stanley Consultants INC.

SEAL

APPROVED

ACTIVITY – SATISFACTORY TO

DATE

APPROVED

FOR EFD FOR COMMANDER NAVFAC

DATE

| A/E | | EFD |
|---|---|---|
| DPJ | DESIGN | |
| DLG | DRAWN | |
| MLG | REVIEW | |
| MLG | QC | |
| | CHIEF ARCH./ ENGR. | |

PROJECT MANAGER

FIRE PROTECTION

BRANCH MANAGER

DESIGN DIRECTOR

DEPARTMENT OF THE NAVY
NAVAL FACILITIES ENGINEERING COMMAND
ATLANTIC DIVISION
NORFOLK, VIRGINIA
NAVAL STATION
U.S. NAVAL STATION
GUANTANAMO BAY, CUBA

# 34.5 KV LINE DIFFERENTIAL SYSTEM

## PP4 SUBSTATION – SITE PLAN

CODE ID. NO. 80091 | SIZE D

SCALE: NONE

EFD NO.

STA. PROJ. NO. R6-95R1

SPEC. NO.

CONSTR. CONTR. NO. N62470-99-C-9147

NAVFAC DRAWING NO. 4501383

SHEET 16 OF 51

**E-15**

DRAWFORM REVISION SEPT 2001

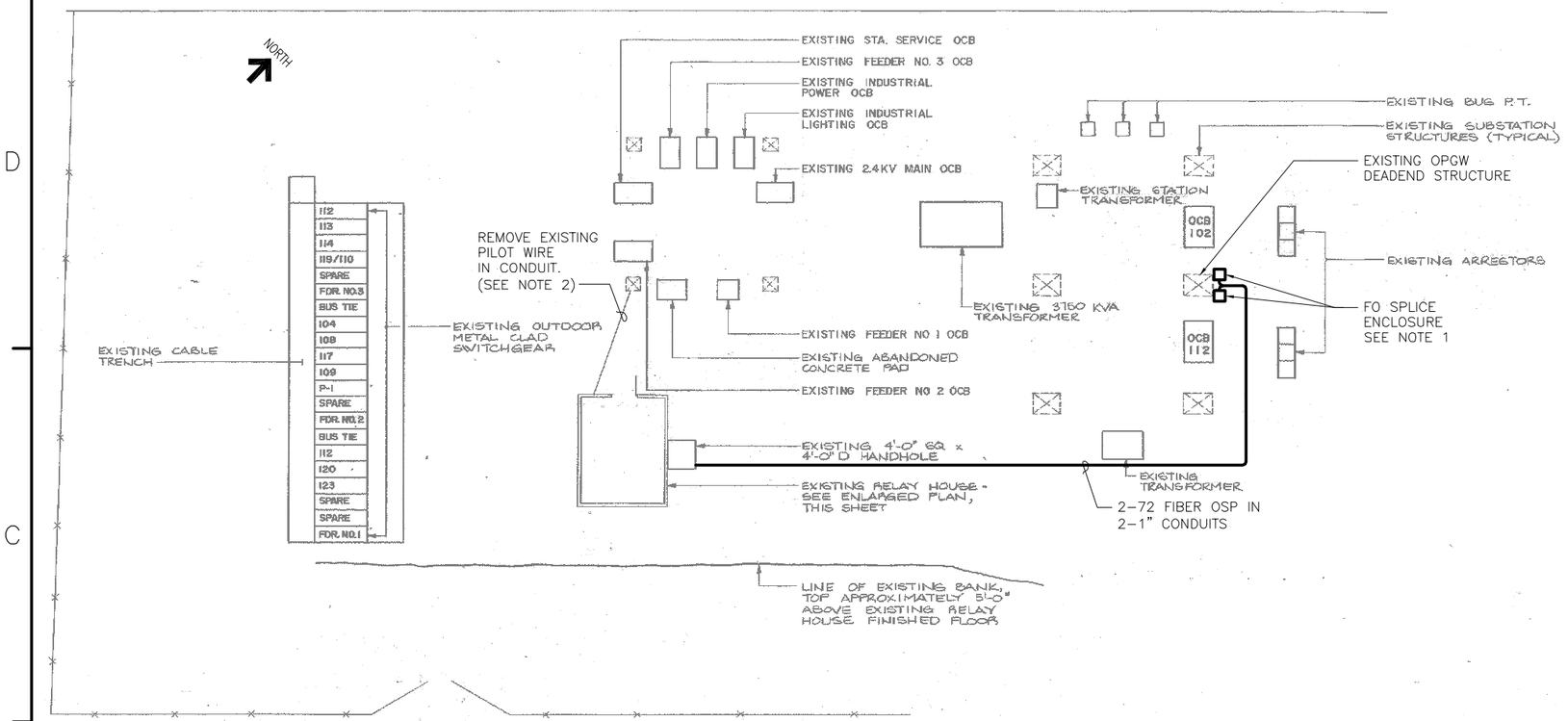


ELECTRICAL SUBSTATION PLAN

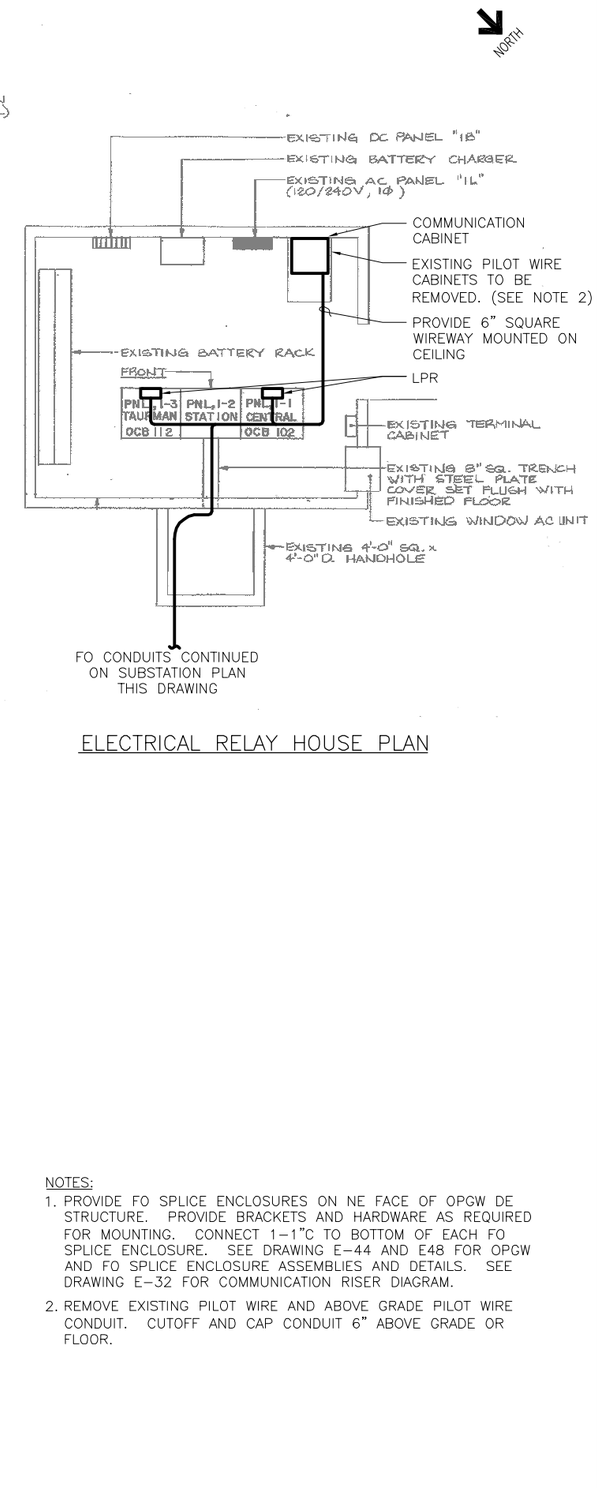


ELECTRICAL RELAY HOUSE PLAN

OPGW DEADEND STRUCTURE

NOTES:

1. PROVIDE FO SPLICE ENCLOSURES ON NE FACE OF OPGW DE STRUCTURE. PROVIDE BRACKETS AND HARDWARE AS REQUIRED FOR MOUNTING. CONNECT 1-1"C TO BOTTOM OF EACH FO SPLICE ENCLOSURE. SEE DRAWING E-44 AND E48 FOR OPGW AND FO SPLICE ENCLOSURE ASSEMBLIES AND DETAILS. SEE DRAWING E-32 FOR COMMUNICATION RISER DIAGRAM.
2. REMOVE EXISTING PILOT WIRE AND ABOVE GRADE PILOT WIRE CONDUIT. CUTOFF AND CAP CONDUIT 6" ABOVE GRADE OR FLOOR.

| REV/DATE | DESCRIPTION | DATE | APPR |
|---|---|---|---|

Stanley Consultants INC.

SEAL

APPROVED

ACTIVITY - SATISFACTORY TO

DATE

APPROVED

FOR EFD FOR COMMANDER NAVFAC

DATE

| A/E | | EFD |
|---|---|---|
| DPJ | DESIGN | |
| DLG | DRAWN | |
| MLG | REVIEW | |
| MLG | QC | |
| | CHIEF ARCH./ ENGR. | |

PROJECT MANAGER

FIRE PROTECTION

BRANCH MANAGER

DESIGN DIRECTOR

DEPARTMENT OF THE NAVY
NAVAL FACILITIES ENGINEERING COMMAND
ATLANTIC DIVISION
NORFOLK, VIRGINIA
NAVAL STATION
U.S. NAVAL STATION
GUANTANAMO BAY, CUBA

# 34.5 KV LINE DIFFERENTIAL SYSTEM

PP1 SUBSTATION - SITE PLAN

CODE ID. NO. 80091 | SIZE D

SCALE: NONE

EFD NO.

STA. PROJ. NO. R6-95R1

SPEC. NO.

CONSTR. CONTR. NO.
N62470-99-C-9147

NAVFAC DRAWING NO.
4501384

SHEET 17 OF 51

E-16

DRAWFORM REVISION SEPT 2001

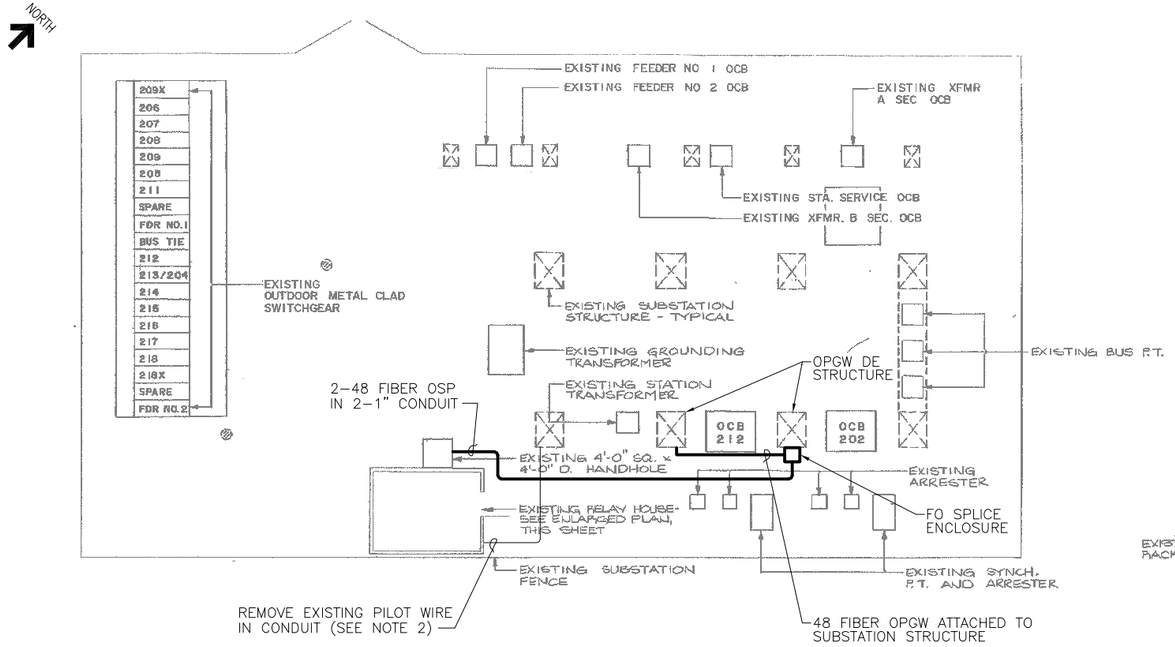


ELECTRICAL SUBSTATION PLAN

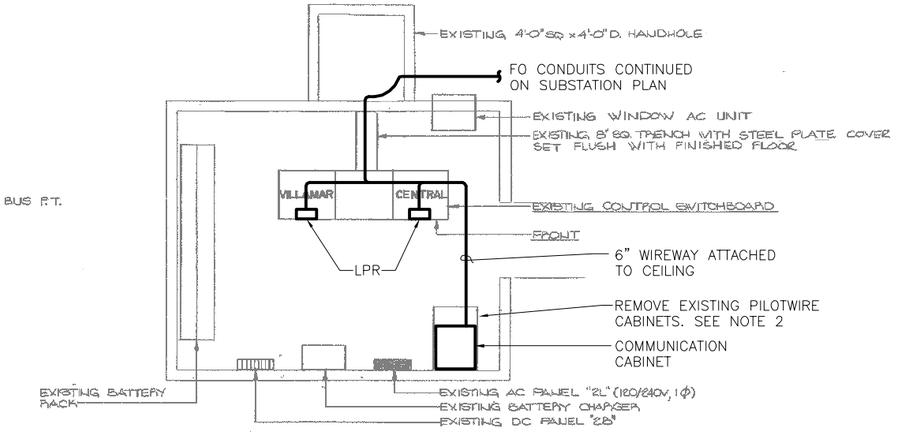


ELECTRICAL RELAY HOUSE PLAN

FO SPLICE ENCLOSURE

OPGW DE STRUCTURE

NOTES:

1. PROVIDE FO SPLICE ENCLOSURE ON SE FACE OF STRUCTURE. PROVIDE BRACKETS AND HARDWARE AS REQUIRED FOR MOUNTING. CONNECT 2-1" C TO BOTTOM OF SPLICE ENCLOSURE. SEE DRAWINGS E-42, E-43, AND E-48 FOR OPGW AND FO SPLICE ENCLOSURE ASSEMBLIES AND DETAILS. SEE DRAWING E-32 FOR COMMUNICATION RISER DIAGRAM.
2. REMOVE EXISTING PILOT WIRE AND ABOVE GRADE PILOT WIRE CONDUIT. CUT OFF AND CAP 6" ABOVE GRADE OR FLOOR.

| APPR | DATE | DESCRIPTION | STA. |
|---|---|---|---|

Stanley Consultants INC.

SEAL

APPROVED

ACTIVITY - SATISFACTORY TO

DATE

APPROVED

FOR EFD FOR COMMANDER NAVFAC

DATE

| A/E | | EFD |
|---|---|---|
| DPJ | DESIGN | |
| DLG | DRAWN | |
| MLG | REVIEW | |
| MLG | QC | |
| | CHIEF ARCH./ ENGR. | |

PROJECT MANAGER

FIRE PROTECTION

BRANCH MANAGER

DESIGN DIRECTOR

DEPARTMENT OF THE NAVY
NAVAL FACILITIES ENGINEERING COMMAND
ATLANTIC DIVISION
NORFOLK, VIRGINIA
NAVAL STATION
U.S. NAVAL STATION
GUANTANAMO BAY, CUBA

34.5 KV LINE DIFFERENTIAL SYSTEM

PP2 SUBSTATION - SITE PLAN

CODE ID. NO. 80091 | SIZE D

SCALE: NONE

EFD NO.

STA. PROJ. NO. R6-95R1

SPEC. NO.

CONSTR. CONTR. NO. N62470-99-C-9147

NAVFAC DRAWING NO. 4501385

SHEET 18 OF 51

E-17

DRAWFORM REVISION SEPT 2001

REVDATE

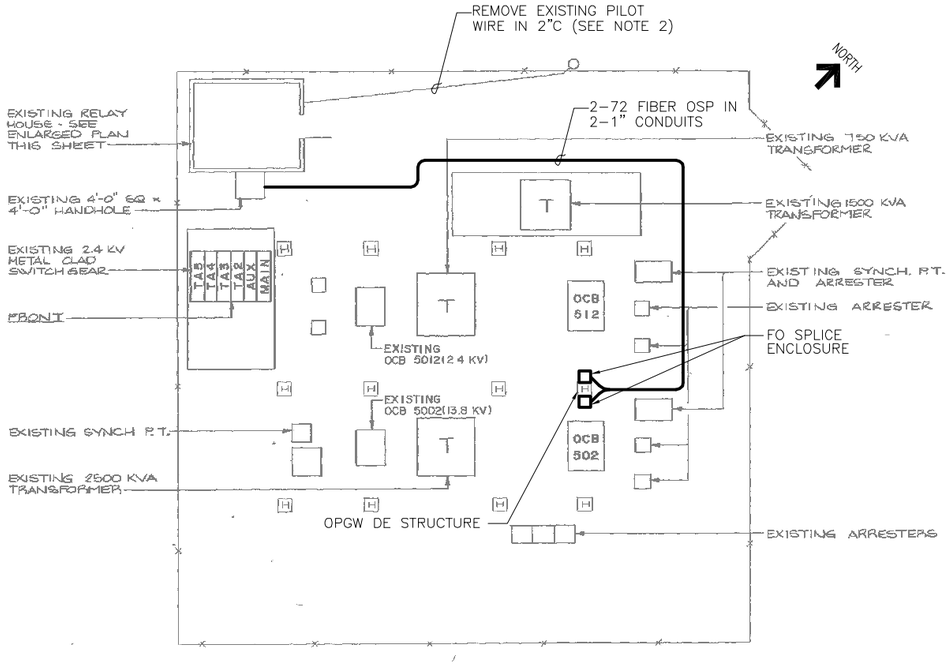


ELECTRICAL SUBSTATION PLAN

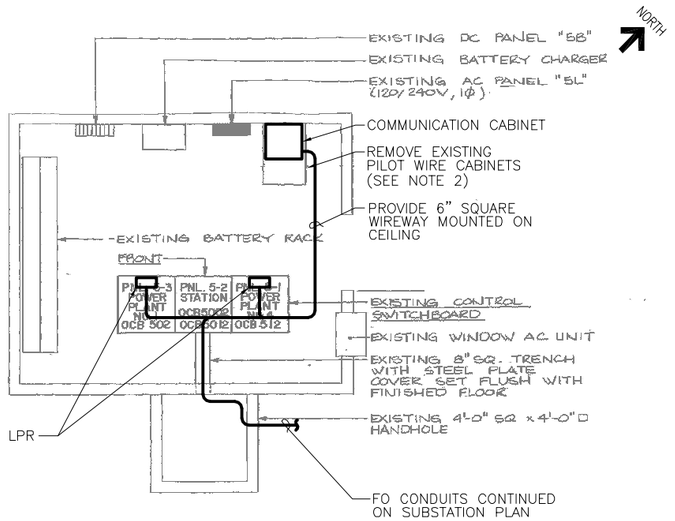


ELECTRICAL RELAY HOUSE PLAN

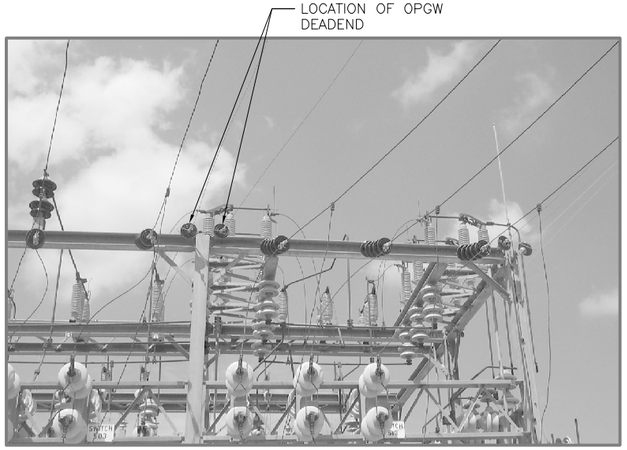


OPGW DEADEND STRUCTURE

NOTES:

1. PROVIDE 2-FO SPLICE ENCLOSURES ON OPGW DEADEND STRUCTURE. PROVIDE BRACKETS AND HARDWARE AS REQUIRED FOR MOUNTING. CONNECT 1"C TO BOTTOM OF EACH FO SPLICE ENCLOSURE. SEE DRAWINGS E-44, E-45, AND E-48 FOR OPGW AND FO SPLICE ENCLOSURE ASSEMBLIES AND DETAILS. SEE DRAWING E-32 FOR COMMUNICATION RISER DIAGRAM.
2. REMOVE EXISTING PILOT WIRE AND ABOVE GRADE PILOT WIRE CONDUIT. CUTOFF AND CAP CONDUIT 6" ABOVE GRADE OR FLOOR.

| APPR | DATE | DESCRIPTION | SYM |
|---|---|---|---|

Stanley Consultants INC.

SEAL

APPROVED

ACTIVITY - SATISFACTORY TO

DATE

APPROVED

FOR EFD FOR COMMANDER NAVFAC

DATE

| A/E | | EFD |
|---|---|---|
| DPJ | DESIGN | |
| DLG | DRAWN | |
| MLG | REVIEW | |
| MLG | QC | |
| | CHIEF ARCH./ ENGR. | |

PROJECT MANAGER

FIRE PROTECTION

BRANCH MANAGER

DESIGN DIRECTOR

DEPARTMENT OF THE NAVY
NAVAL FACILITIES ENGINEERING COMMAND
ATLANTIC DIVISION
NAVAL STATION NORFOLK, VIRGINIA

U.S. NAVAL STATION GUANTANAMO BAY, CUBA

# 34.5 KV LINE DIFFERENTIAL SYSTEM

TAURMAN AVENUE SUBSTATION - SITE PLAN

CODE ID. NO. 80091 | SIZE D

SCALE: NONE

EFD NO.

STA. PROJ. NO. R6-95R1

SPEC. NO.

CONSTR. CONTR. NO. N62470-99-C-9147

NAVFAC DRAWING NO. 4501386

SHEET 19 OF 51

E-18

DRAWFORM REVISION SEPT 2001

REVDATE

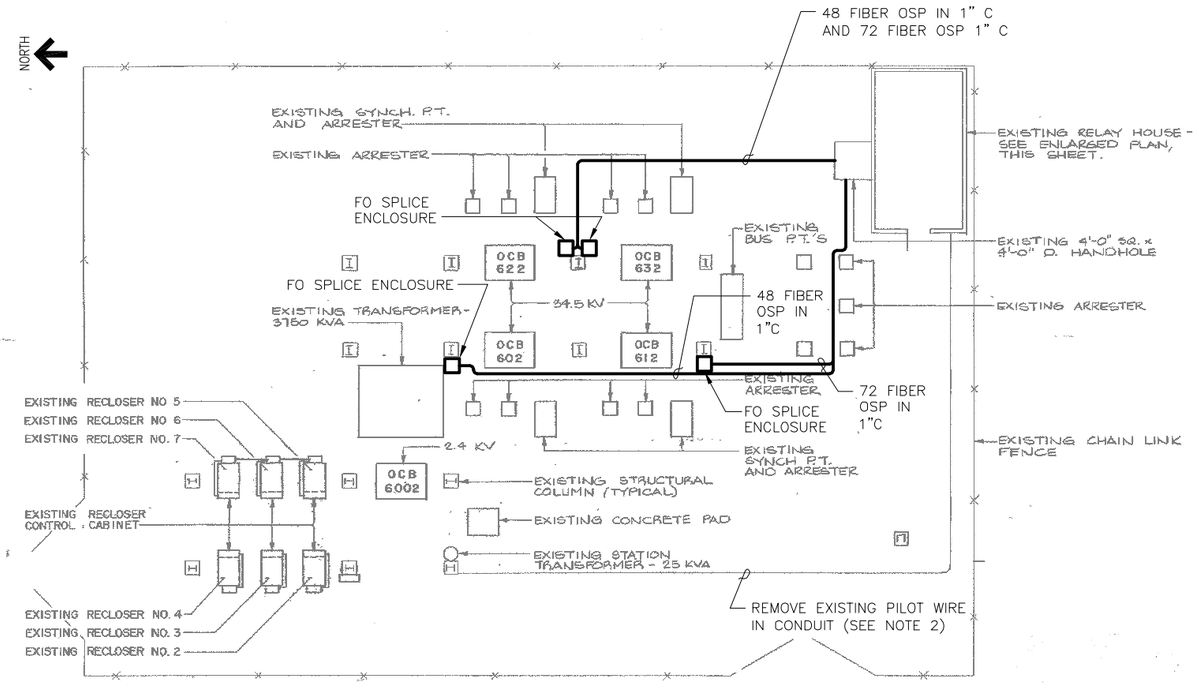


ELECTRICAL SUBSTATION PLAN

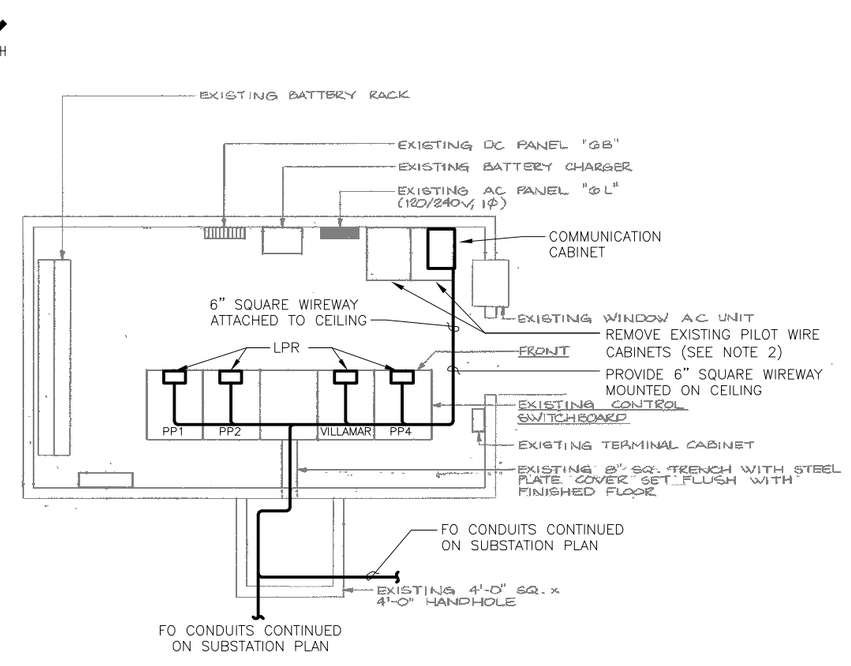


ELECTRICAL RELAY HOUSE PLAN

OPGW DEADEND STRUCTURE – EAST SIDE

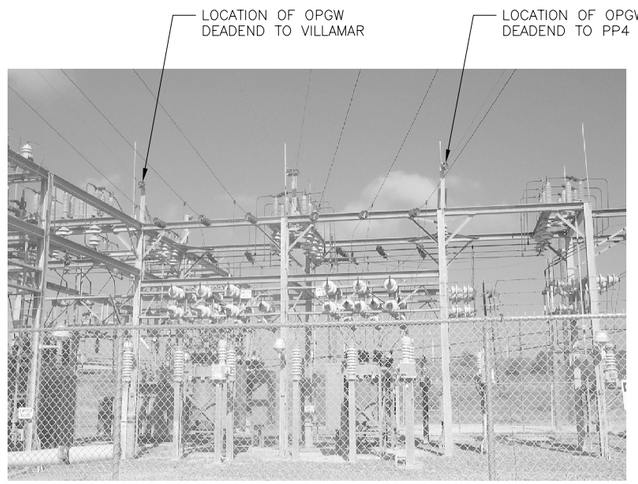


OPGW DEADEND STRUCTURE – WEST SIDE

NOTES:

1. PROVIDE FO SPLICE ENCLOSURES AT LOCATIONS SHOWN. PROVIDE BRACKETS AND HARDWARE AS REQUIRED FOR MOUNTING. CONNECT 1"C TO BOTTOM OF EACH SPLICE ENCLOSURE. SEE DRAWINGS E-42, E-44, E-45, AND E-48 FOR OPGW AND FO SPLICE ENCLOSURE ASSEMBLIES AND DETAILS. SEE DRAWING E-31 FOR COMMUNICATION RISER DIAGRAM.
2. REMOVE EXISTING PILOT WIRE AND ABOVE GRADE PILOT WIRE CONDUIT. CUTOFF AND CAP CONDUIT 6" ABOVE GRADE OR FLOOR.

| APPR | DATE | DESCRIPTION | SYM |
|---|---|---|---|
| | | | |

Stanley Consultants INC.

SEAL

APPROVED

ACTIVITY – SATISFACTORY TO

DATE

APPROVED

FOR EFD FOR COMMANDER NAVFAC

DATE

| A/E | | EFD |
|---|---|---|
| DPJ | DESIGN | |
| DLG | DRAWN | |
| MLG | REVIEW | |
| MLG | QC | |
| | CHIEF ARCH./ ENGR. | |

PROJECT MANAGER

FIRE PROTECTION

BRANCH MANAGER

DESIGN DIRECTOR

DEPARTMENT OF THE NAVY
NAVAL FACILITIES ENGINEERING COMMAND
ATLANTIC DIVISION
NORFOLK, VIRGINIA
NAVAL STATION
U.S. NAVAL STATION
GUANTANAMO BAY, CUBA

# 34.5 KV LINE DIFFERENTIAL SYSTEM

CENTRAL AVENUE SUBSTATION – SITE PLAN

CODE ID. NO. 80091 | SIZE D

SCALE: NONE

EFD NO.

STA. PROJ. NO. R6-95R1

SPEC. NO.

CONSTR. CONTR. NO.
N62470-99-C-9147

NAVFAC DRAWING NO.
4501387

SHEET 20 OF 51

E-19

DRAWFORM REVISION SEPT 2001

REVDATE

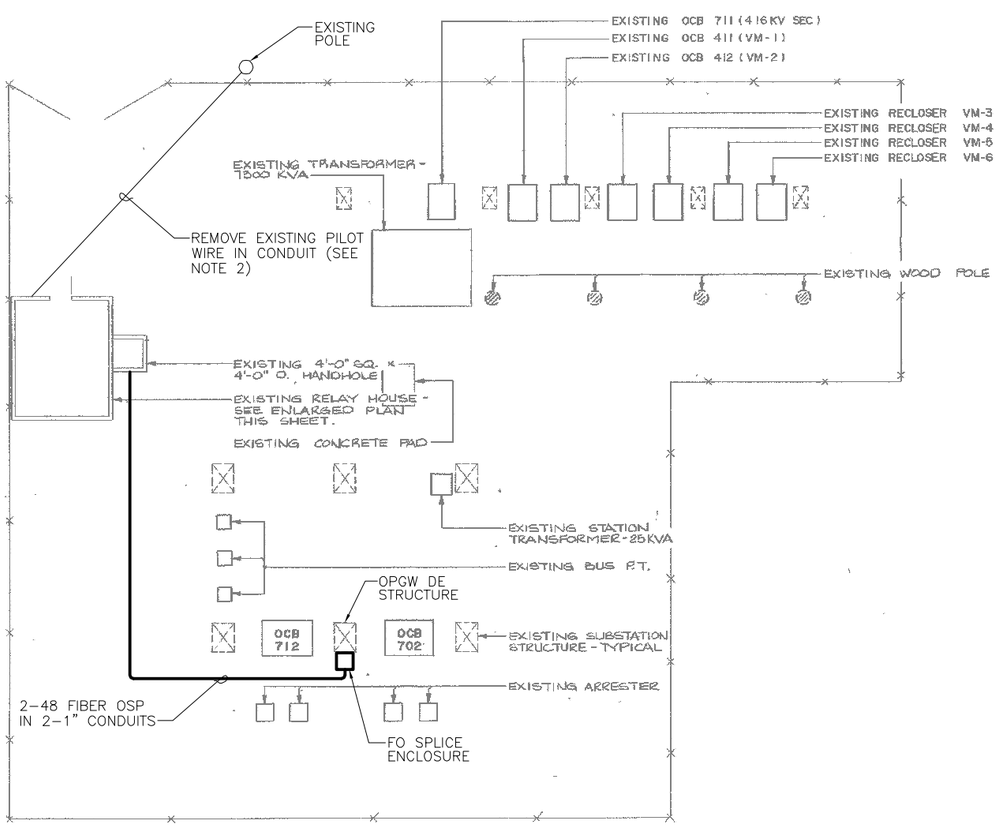


ELECTRICAL SUBSTATION PLAN

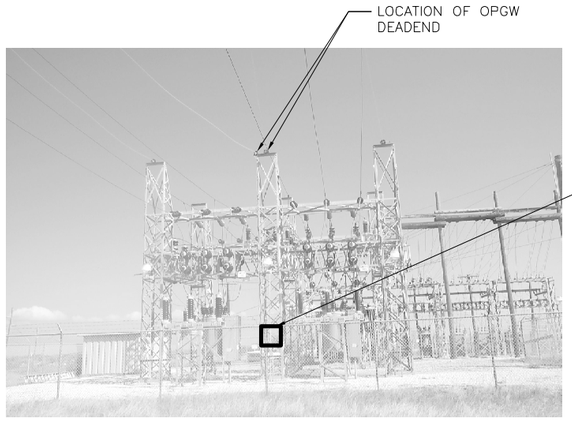


OPGW DEADEND STRUCTURE

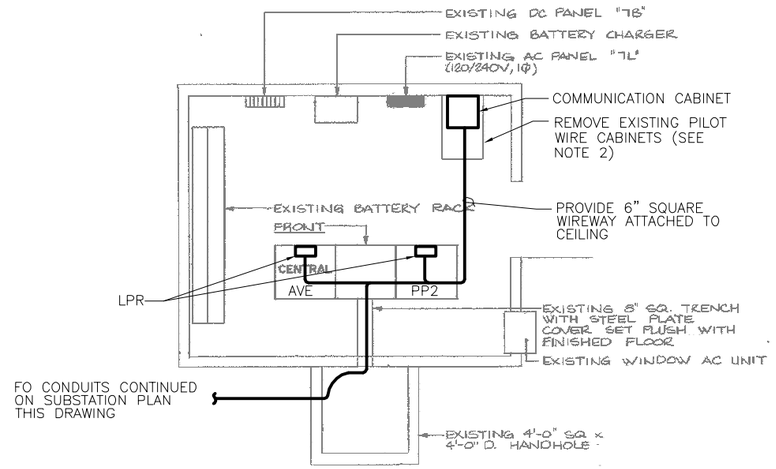


ELECTRICAL RELAY HOUSE PLAN

NOTES:

1. PROVIDE FO SPLICE ENCLOSURE ON SOUTH FACE OF OPGW DE STRUCTURE. PROVIDE BRACKETS AND HARDWIRE AS REQUIRED FOR MOUNTING. CONNECT 2-1"C TO BOTTOM OF FO SPLICE ENCLOSURE. SEE DRAWING E-42, E-43 AND E48 FOR OPGW AND FO SPLICE ENCLOSURE ASSEMBLIES AND DETAILS. SEE DRAWING E-32 FOR COMMUNICATION RISER DIAGRAM.
2. REMOVE EXISTING PILOT WIRE ABOVE GRADE AND PILOT WIRE CONDUIT. CUTOFF AND CAP CONDUIT 6" ABOVE GRADE OR FLOOR.

APPR | DATE | DESCRIPTION | STA.

Stanley Consultants INC.

SEAL

APPROVED

ACTIVITY - SATISFACTORY TO

DATE

APPROVED

FOR EFD FOR COMMANDER NAVFAC

DATE

| A/E | EFD |
|---|---|
| DPJ | DESIGN |
| DLG | DRAWN |
| MLG | REVIEW |
| MLG | QC |
| | CHIEF ARCH./ ENGR. |

PROJECT MANAGER

FIRE PROTECTION

BRANCH MANAGER

DESIGN DIRECTOR

DEPARTMENT OF THE NAVY
NAVAL FACILITIES ENGINEERING COMMAND
ATLANTIC DIVISION
NORFOLK, VIRGINIA
NAVAL STATION
U.S. NAVAL STATION
GUANTANAMO BAY, CUBA

# 34.5 KV LINE DIFFERENTIAL SYSTEM

VILLAMAR SUBSTATION - SITE PLAN

CODE ID. NO. 80091 | SIZE D

SCALE: NONE

EFD NO.

STA. PROJ. NO. R6-95R1

SPEC. NO.

CONSTR. CONTR. NO.
N62470-99-C-9147

NAVFAC DRAWING NO.
4501388

SHEET 21 OF 51

E-20

DRAWFORM REVISION SEPT 2001

REV/DATE

LEGEND

REMOVE DEVICE AND ASSOCIATED WIRING

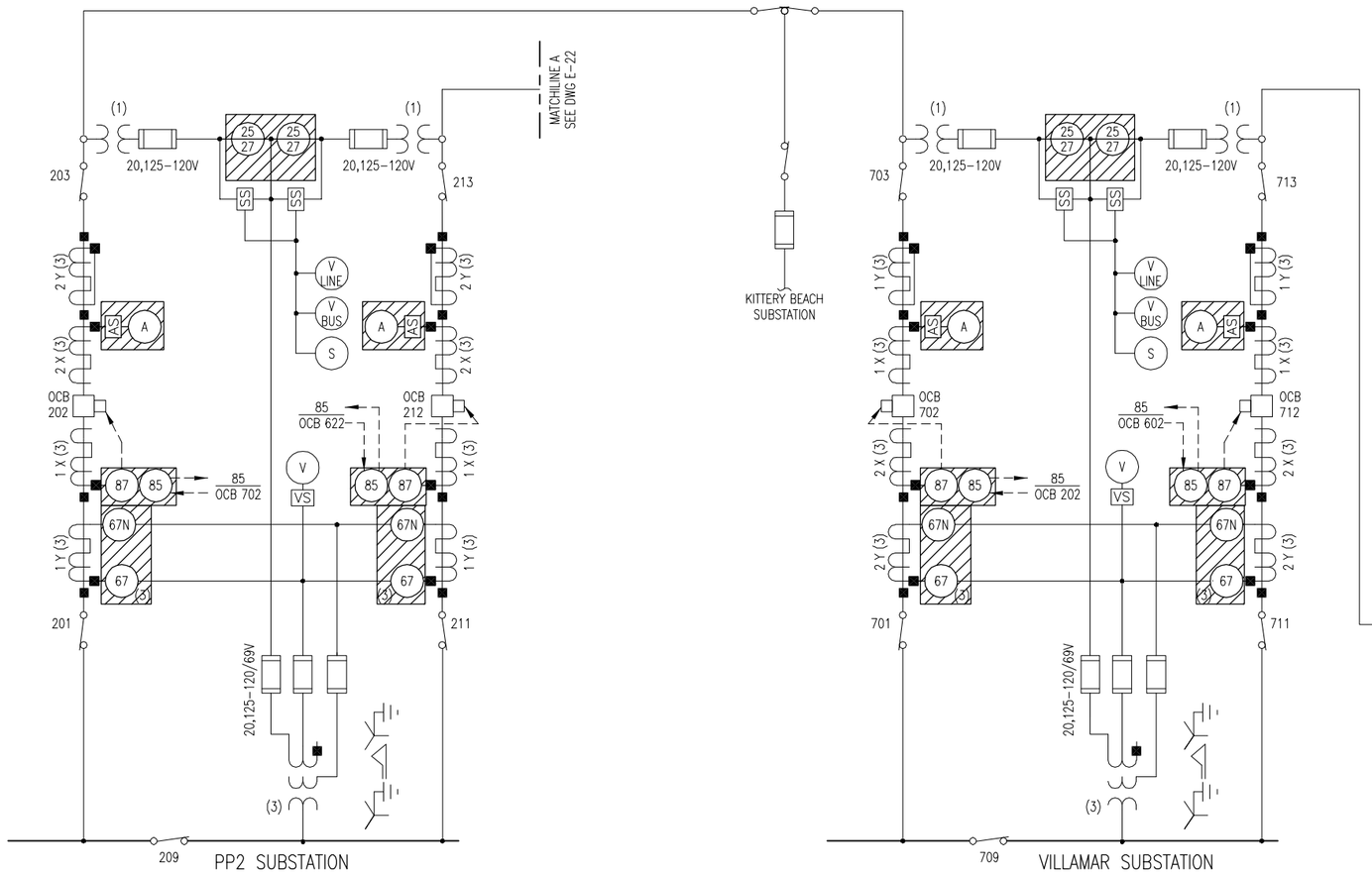


Stanley Consultants INC.

APPROVED

ACTIVITY – SATISFACTORY TO

DATE

APPROVED

FOR EFD FOR COMMANDER NAVFAC

DATE

| A/E | EFD |
|---|---|
| DPJ | DESIGN |
| BMG | DRAWN |
| MLG | REVIEW |
| MLG | QC |
| | CHIEF ARCH./ ENGR. |

PROJECT MANAGER

FIRE PROTECTION

BRANCH MANAGER

DESIGN DIRECTOR

DEPARTMENT OF THE NAVY
NAVAL FACILITIES ENGINEERING COMMAND
ATLANTIC DIVISION
NORFOLK, VIRGINIA
NAVAL STATION
U.S. NAVAL STATION
GUANTANAMO BAY, CUBA

# 34.5 KV LINE DIFFERENTIAL SYSTEM

34.5 KV ONE–LINE – EXISTING – SHEET 1

CODE ID. NO. 80091 | SIZE D

SCALE: NONE

EFD NO.

STA. PROJ. NO. R6–95R1

SPEC. NO.

CONSTR. CONTR. NO. N62470–99–C–9147

NAVFAC DRAWING NO. 4501389

SHEET 22 OF 51

E–21

DRAWFORM REVISION SEPT 2001

REV DATE DESCRIPTION APPR

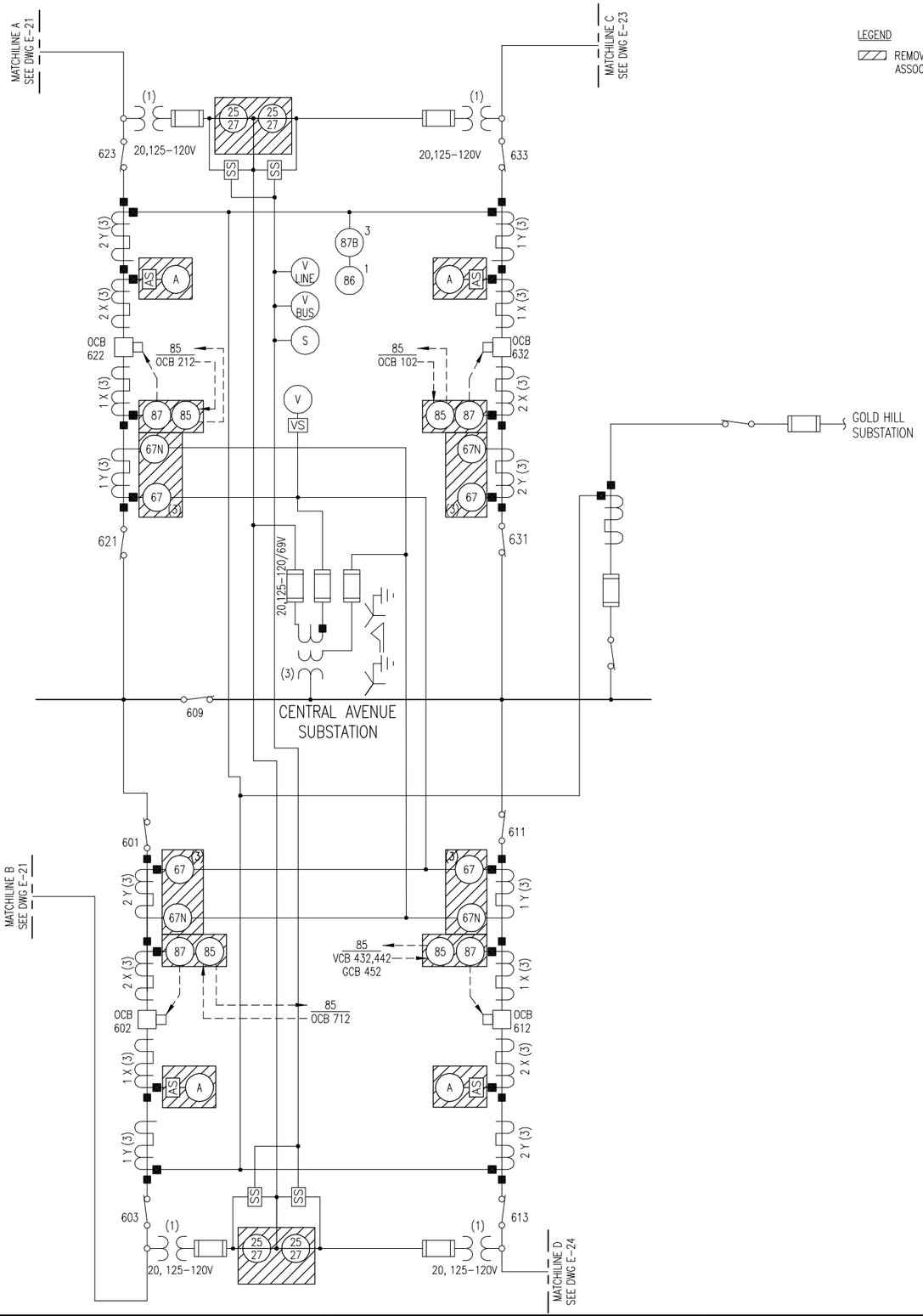


| REV | DATE | DESCRIPTION | APPR |
|---|---|---|---|
| | | | |

Stanley Consultants INC.

SEAL

APPROVED

ACTIVITY – SATISFACTORY TO

DATE

APPROVED

FOR EFD FOR COMMANDER NAVFAC

DATE

| A/E | EFD |
|---|---|
| DPJ | DESIGN |
| BMG | DRAWN |
| MLG | REVIEW |
| MLG | QC |
| | CHIEF ARCH./ ENGR. |

PROJECT MANAGER

FIRE PROTECTION

BRANCH MANAGER

DESIGN DIRECTOR

DEPARTMENT OF THE NAVY
NAVAL STATION
NAVAL FACILITIES ENGINEERING COMMAND
ATLANTIC DIVISION
NORFOLK, VIRGINIA

U.S. NAVAL STATION
GUANTANAMO BAY, CUBA

# 34.5 KV LINE DIFFERENTIAL SYSTEM

34.5 KV ONE-LINE – EXISTING – SHEET 2

CODE ID. NO. 80091 | SIZE D

SCALE: NONE

EFD NO.

STA. PROJ. NO. R6-95R1

SPEC. NO.

CONSTR. CONTR. NO.
N62470-99-C-9147

NAVFAC DRAWING NO.
4501390

SHEET 23 OF 51

E-22

DRAWFORM REVISION SEPT 2001

LEGEND

▨ REMOVE DEVICE AND ASSOCIATED WIRING

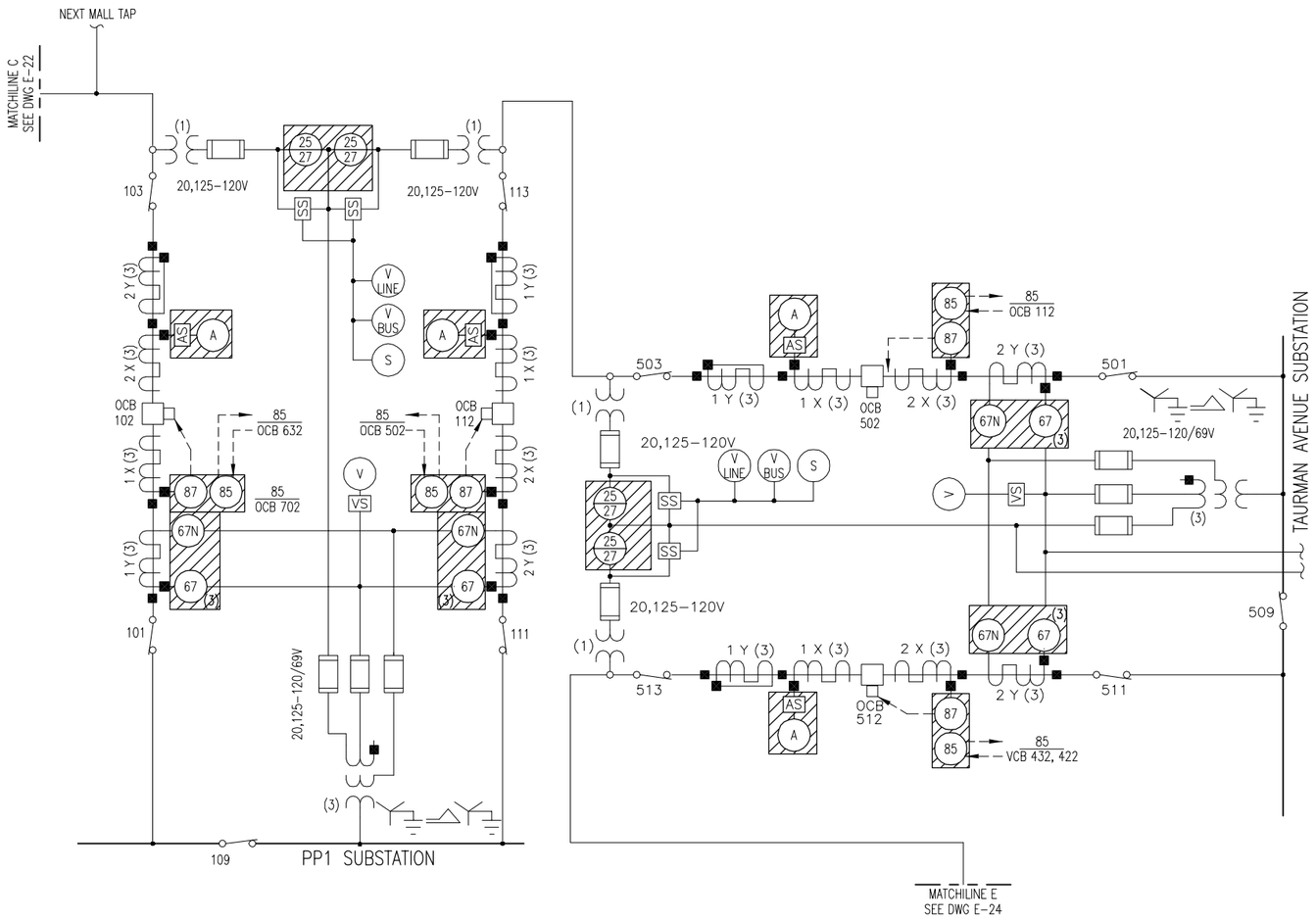


| NO. | DATE | DESCRIPTION | APPR |
|---|---|---|---|
| | | | |

Stanley Consultants INC.

SEAL

APPROVED

ACTIVITY – SATISFACTORY TO

DATE

APPROVED

FOR EFD FOR COMMANDER NAVFAC

DATE

| A/E | EFD | |
|---|---|---|
| DPJ | | DESIGN |
| BMG | | DRAWN |
| MLG | | REVIEW |
| MLG | | QC |
| | | CHIEF ARCH./ ENGR. |

PROJECT MANAGER

FIRE PROTECTION

BRANCH MANAGER

DESIGN DIRECTOR

DEPARTMENT OF THE NAVY
NAVAL FACILITIES ENGINEERING COMMAND
NORFOLK, VIRGINIA
ATLANTIC DIVISION
NAVAL STATION
U.S. NAVAL STATION
GUANTANAMO BAY, CUBA

# 34.5 KV LINE DIFFERENTIAL SYSTEM

34.5 KV ONE-LINE – EXISTING – SHEET 3

CODE ID. NO. 80091 | SIZE D

SCALE: NONE

EFD NO.

STA. PROJ. NO. R6-95R1

SPEC. NO.

CONSTR. CONTR. NO.
N62470-99-C-9147

NAVFAC DRAWING NO.
4501391

SHEET 24 OF 51

E-23

DRAWFORM REVISION SEPT 2001

REVDATE

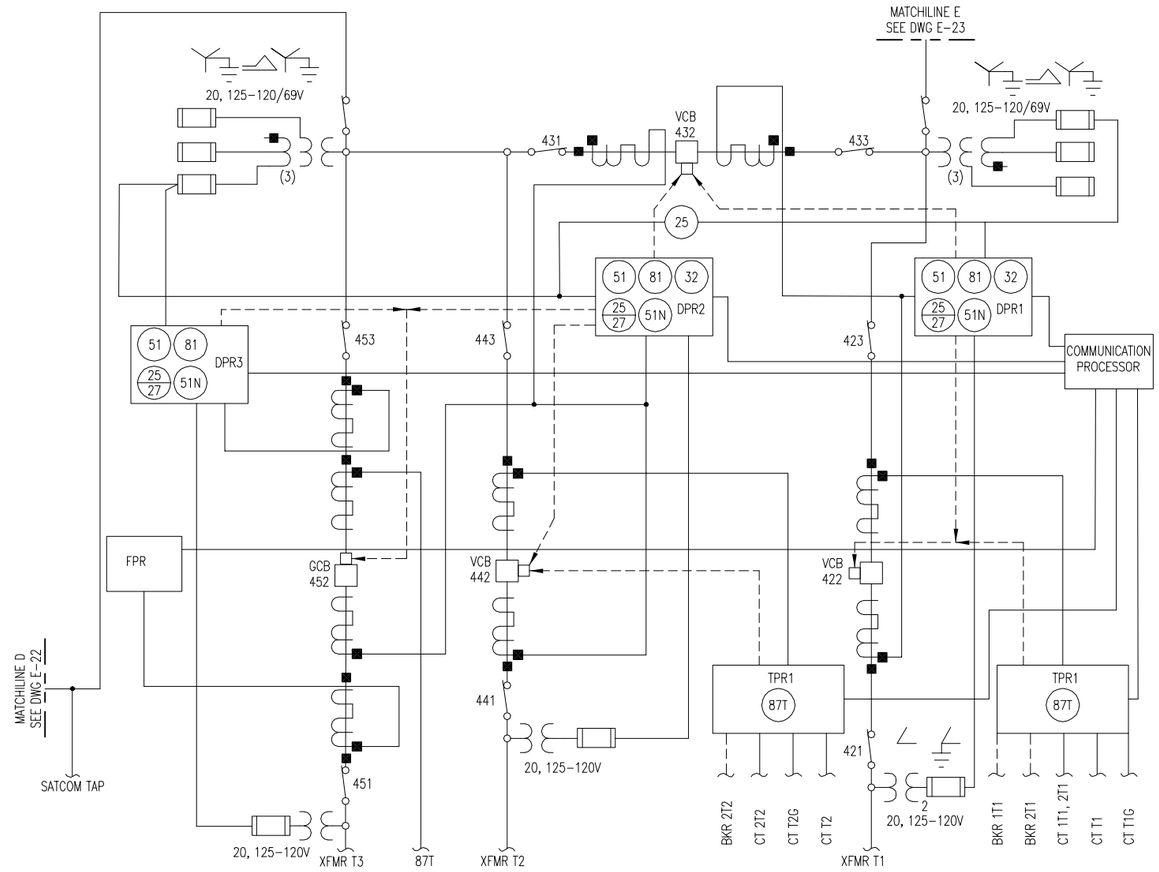


PP4 SUBSTATION

NOTES:

1. DEVICES 85 AND 87 ARE DISCONNECTED, SEE DRAWINGS E-15 AND E-39 FOR REMOVAL.

| REV/DATE | DESCRIPTION | APPR |
|---|---|---|

Stanley Consultants INC.

SEAL

APPROVED

ACTIVITY – SATISFACTORY TO

DATE

APPROVED

FOR EFD FOR COMMANDER NAVFAC

DATE

| A/E | EFD |
|---|---|
| DPJ | DESIGN |
| BMG | DRAWN |
| MLG | REVIEW |
| MLG | QC |
| | CHIEF ARCH./ ENGR. |

PROJECT MANAGER

FIRE PROTECTION

BRANCH MANAGER

DESIGN DIRECTOR

DEPARTMENT OF THE NAVY
NAVAL FACILITIES ENGINEERING COMMAND
NAVAL STATION ATLANTIC DIVISION
NORFOLK, VIRGINIA

U.S. NAVAL STATION GUANTANAMO BAY, CUBA

# 34.5 KV LINE DIFFERENTIAL SYSTEM

34.5 KV ONE-LINE – EXISTING – SHEET 4

CODE ID. NO. 80091 | SIZE D

SCALE: NONE

EFD NO.

STA. PROJ. NO. R6-95R1

SPEC. NO.

CONSTR. CONTR. NO.
N62470-99-C-9147

NAVFAC DRAWING NO.
4501392

SHEET 25 OF 51

E-24

DRAWFORM REVISION SEPT 2001

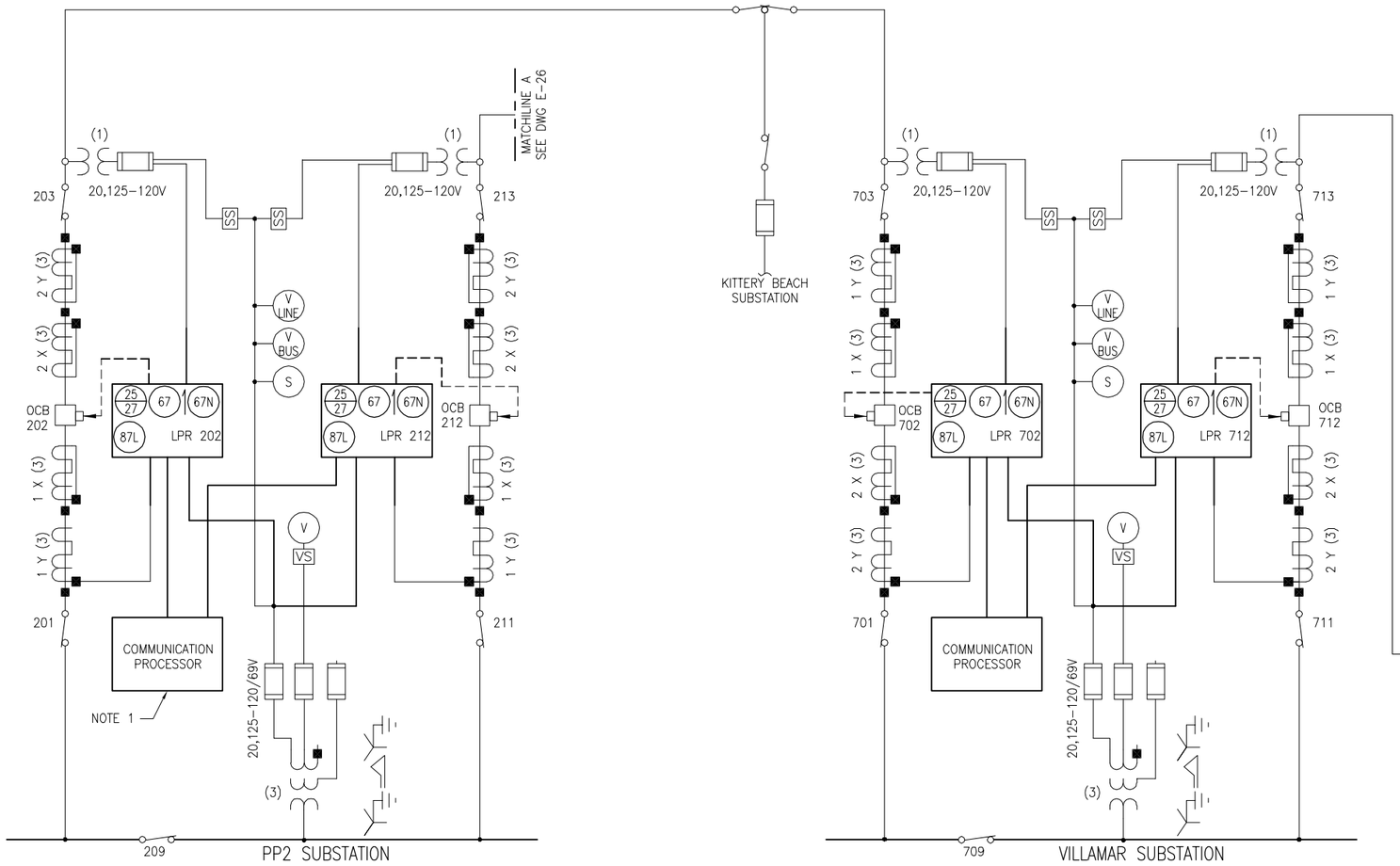


NOTES:

1. REMOVE EXISTING COMMUNICATION PROCESSOR FROM PP4 34.5KV SWITCHBOARD AND INSTALL AT PP2.

| APPR | DATE | DESCRIPTION | SYM |
|---|---|---|---|
| | | | |

Stanley Consultants INC.

SEAL

APPROVED

ACTIVITY – SATISFACTORY TO

DATE

APPROVED

FOR EFD FOR COMMANDER NAVFAC

DATE

| A/E | | EFD |
|---|---|---|
| DPJ | DESIGN | |
| BMG | DRAWN | |
| MLG | REVIEW | |
| MLG | QC | |
| | CHIEF ARCH./ ENGR. | |

PROJECT MANAGER

FIRE PROTECTION

BRANCH MANAGER

DESIGN DIRECTOR

DEPARTMENT OF THE NAVY
NAVAL STATION
ATLANTIC DIVISION
NAVAL FACILITIES ENGINEERING COMMAND
NORFOLK, VIRGINIA

U.S. NAVAL STATION
GUANTANAMO BAY, CUBA

# 34.5 KV LINE DIFFERENTIAL SYSTEM

34.5 KV ONE–LINE – NEW – SHEET 1

CODE ID. NO. 80091 | SIZE D

SCALE: NONE

EFD NO.

STA. PROJ. NO. R6–95R1

SPEC. NO.

CONSTR. CONTR. NO.
N62470–99–C–9147

NAVFAC DRAWING NO.
4501393

SHEET 26 OF 51

E–25

REV DATE

DRAWFORM REVISION SEPT 2001

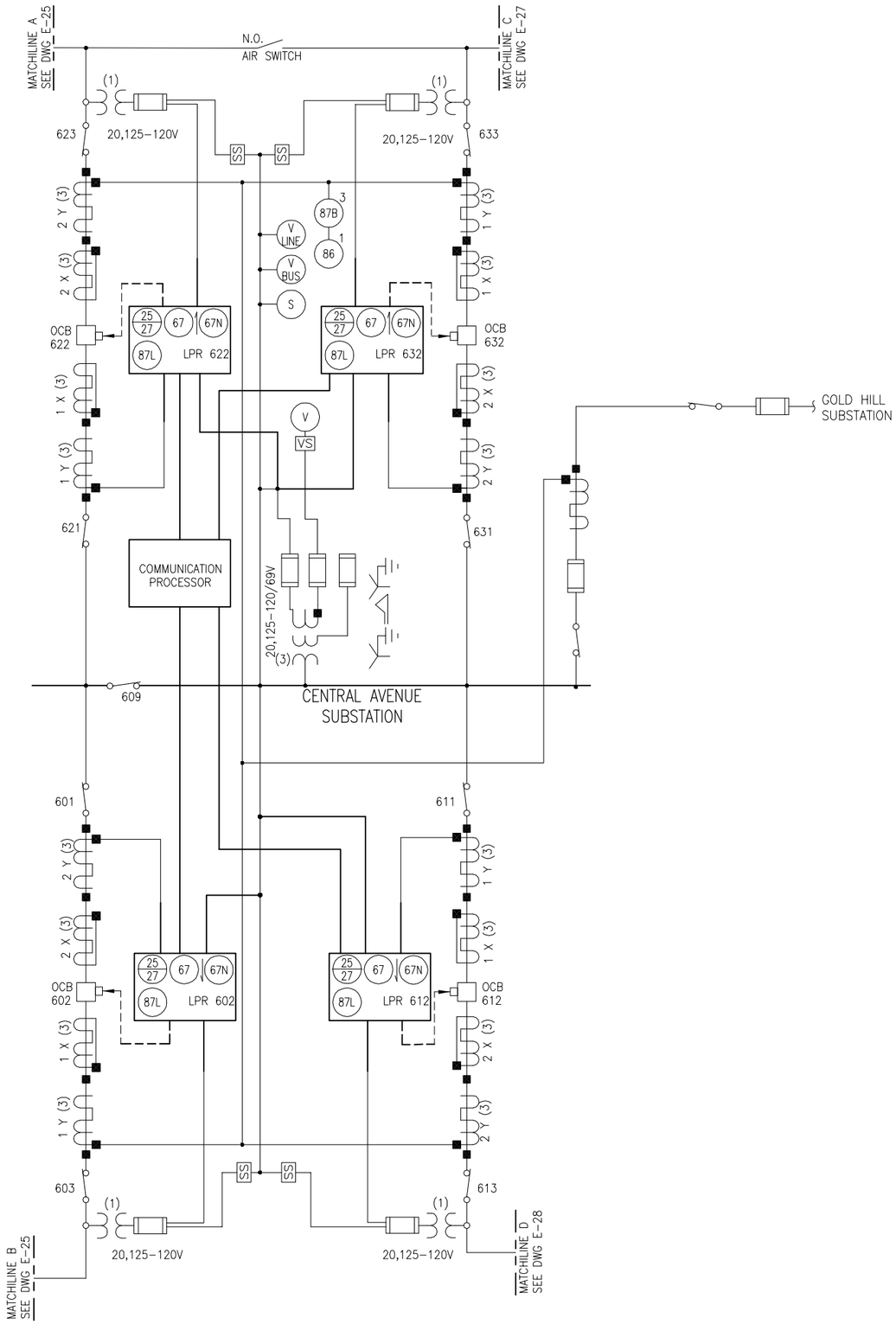


Stanley Consultants INC.

SYM. | DESCRIPTION | DATE | APPR

SEAL

APPROVED

ACTIVITY – SATISFACTORY TO

DATE

APPROVED

FOR EFD FOR COMMANDER NAVFAC

DATE

| A/E | | EFD |
|---|---|---|
| DPJ | DESIGN | |
| BMG | DRAWN | |
| MLG | REVIEW | |
| MLG | QC | |
| | CHIEF ARCH./ ENGR. | |

PROJECT MANAGER

FIRE PROTECTION

BRANCH MANAGER

DESIGN DIRECTOR

DEPARTMENT OF THE NAVY

NAVAL FACILITIES ENGINEERING COMMAND

ATLANTIC DIVISION

NORFOLK, VIRGINIA

NAVAL STATION

U.S. NAVAL STATION GUANTANAMO BAY, CUBA

# 34.5 KV LINE DIFFERENTIAL SYSTEM

34.5 KV ONE-LINE – NEW – SHEET 2

CODE ID. NO. 80091 | SIZE D

SCALE: NONE

EFD NO.

STA. PROJ. NO. R6-95R1

SPEC. NO.

CONSTR. CONTR. NO. N62470-99-C-9147

NAVFAC DRAWING NO. 4501394

SHEET 27 OF 51

E-26

DRAWFORM REVISION SEPT 2001

REVDATE

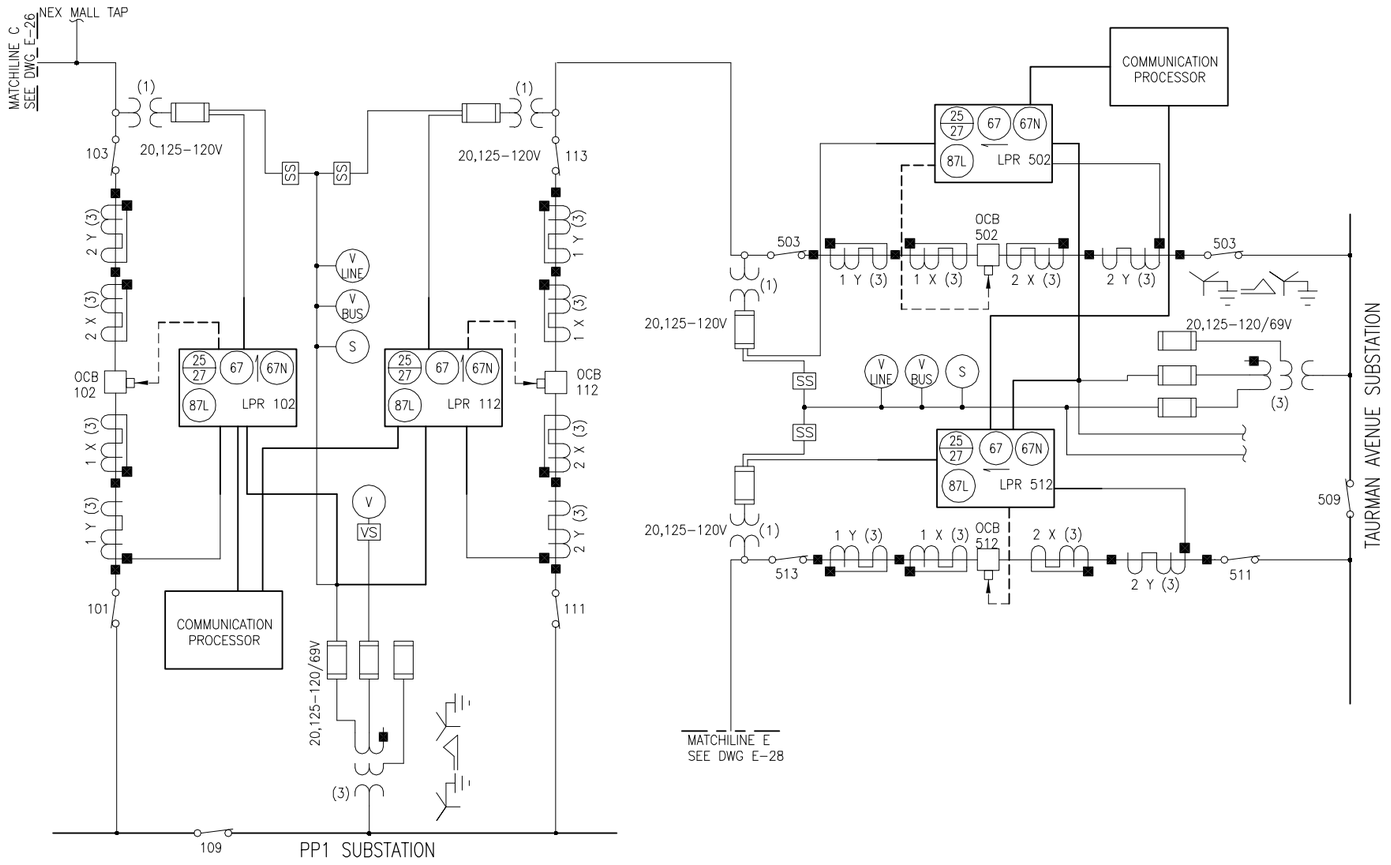


| | |
|---|---|
| APPR | |
| DATE | |
| DESCRIPTION | |
| SYM | |

Stanley Consultants INC.

SEAL

APPROVED

ACTIVITY – SATISFACTORY TO

DATE

APPROVED

FOR EFD FOR COMMANDER NAVFAC

DATE

| A/E | EFD |
|---|---|
| DPJ | DESIGN |
| BMG | DRAWN |
| MLG | REVIEW |
| MLG | QC |
| | CHIEF ARCH./ ENGR. |

PROJECT MANAGER

FIRE PROTECTION

BRANCH MANAGER

DESIGN DIRECTOR

DEPARTMENT OF THE NAVY
NAVAL STATION
NAVAL FACILITIES ENGINEERING COMMAND
ATLANTIC DIVISION
NORFOLK, VIRGINIA

U.S. NAVAL STATION
GUANTANAMO BAY, CUBA

# 34.5 KV LINE DIFFERENTIAL SYSTEM

34.5 KV ONE-LINE - NEW - SHEET 3

CODE ID. NO. 80091 | SIZE D

SCALE: NONE

EFD NO.

STA PROJ. NO. R6-95R1

SPEC. NO.

CONSTR. CONTR. NO.
N62470-99-C-9147

NAVFAC DRAWING NO.
4501395

SHEET 28 OF 51

E-27

DRAWFORM REVISION SEPT 2001

REVDATE

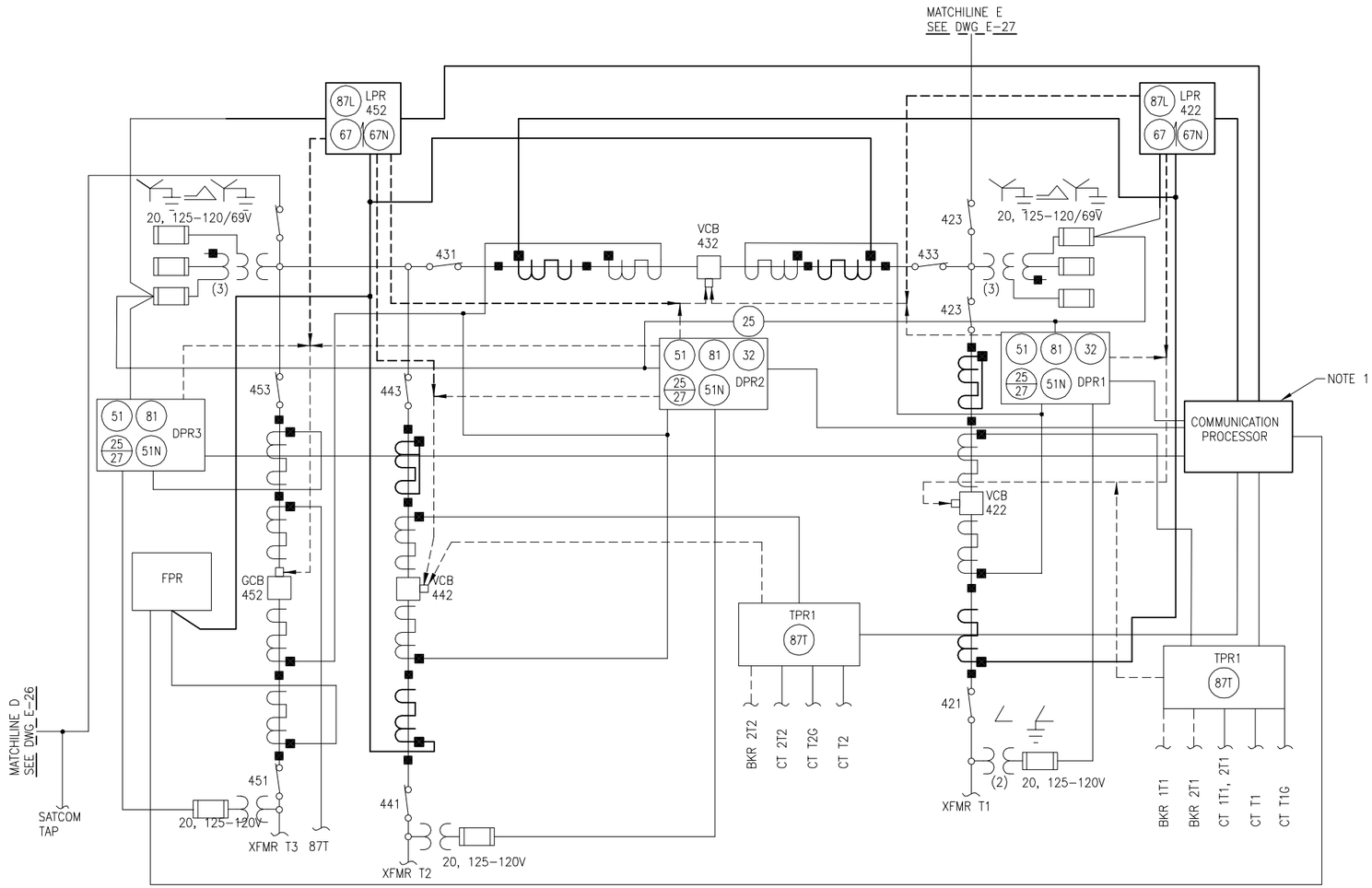


PP4 SUBSTATION

NOTES:

1. PROVIDE COMMUNICATION PROCESSOR. RELOCATE EXISTING COMMUNICATION PROCESSOR TO PP2 SUBSTATION.

REV DATE DESCRIPTION APPR

Stanley Consultants INC.

SEAL

APPROVED

ACTIVITY – SATISFACTORY TO

DATE

APPROVED

FOR EFD FOR COMMANDER NAVFAC

DATE

| A/E | EFD |
|---|---|
| DPJ | DESIGN |
| BMG | DRAWN |
| MLG | REVIEW |
| MLG | QC |
| | CHIEF ARCH./ ENGR. |

PROJECT MANAGER

FIRE PROTECTION

BRANCH MANAGER

DESIGN DIRECTOR

DEPARTMENT OF THE NAVY
NAVAL FACILITIES ENGINEERING COMMAND
NORFOLK, VIRGINIA
NAVAL STATION ATLANTIC DIVISION
U.S. NAVAL STATION GUANTANAMO BAY, CUBA

# 34.5 KV LINE DIFFERENTIAL SYSTEM

34.5 KV ONE-LINE – NEW – SHEET 4

CODE ID. NO. 80091 SIZE D

SCALE: NONE

EFD NO.

STA. PROJ. NO. R6-95R1

SPEC. NO.

CONSTR. CONTR. NO.
N62470-99-C-9147

NAVFAC DRAWING NO.
4501396

SHEET 29 OF 51

E-28

DRAWFORM REVISION SEPT 2001

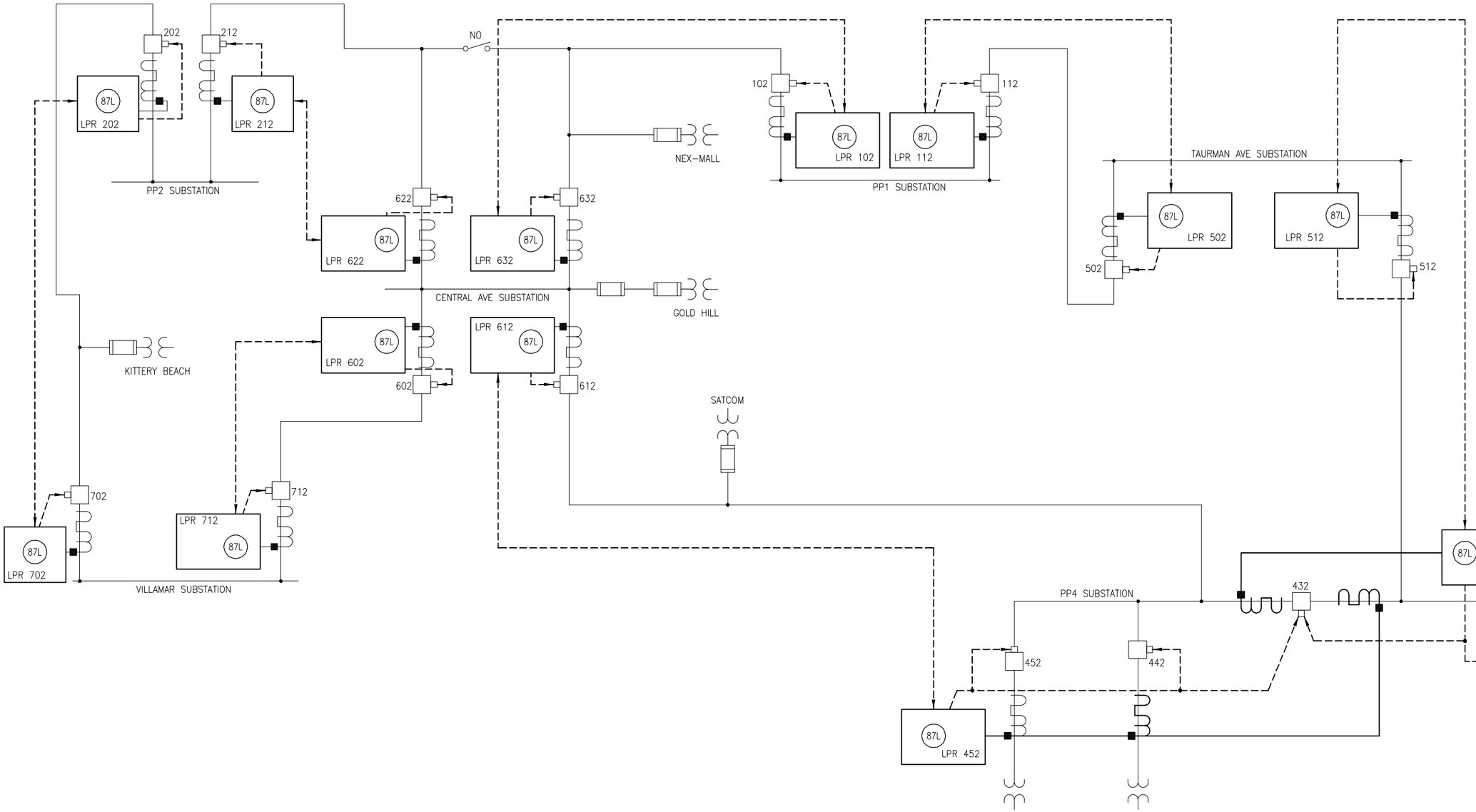


| REV | DATE | DESCRIPTION | APPR |
|---|---|---|---|
| | | | |

Stanley Consultants INC.

SEAL

APPROVED

ACTIVITY – SATISFACTORY TO

DATE

APPROVED

FOR EFD FOR COMMANDER NAVFAC

DATE

| A/E | | EFD |
|---|---|---|
| MLG | DESIGN | |
| BMG | DRAWN | |
| DPJ | REVIEW | |
| MLG | QC | |
| | CHIEF ARCH./ ENGR. | |

PROJECT MANAGER

FIRE PROTECTION

BRANCH MANAGER

DESIGN DIRECTOR

DEPARTMENT OF THE NAVY
NAVAL FACILITIES ENGINEERING COMMAND
NORFOLK, VIRGINIA
NAVAL STATION
ATLANTIC DIVISION
U.S. NAVAL STATION
GUANTANAMO BAY, CUBA

# 34.5 KV LINE DIFFERENTIAL SYSTEM

SIMPLIFIED 34.5 KV LINE DIFFERENTIAL DIAGRAM

| | |
|---|---|
| CODE ID. NO. 80091 | SIZE D |
| SCALE: NONE | |
| EFD NO. | |
| STA. PROJ. NO. R6–95R1 | |
| SPEC. NO. | |
| CONSTR. CONTR. NO. N62470–99–C–9147 | |
| NAVFAC DRAWING NO. 4501397 | |
| SHEET 30 OF 51 | |

E–29

DRAWFORM REVISION SEPT 2001

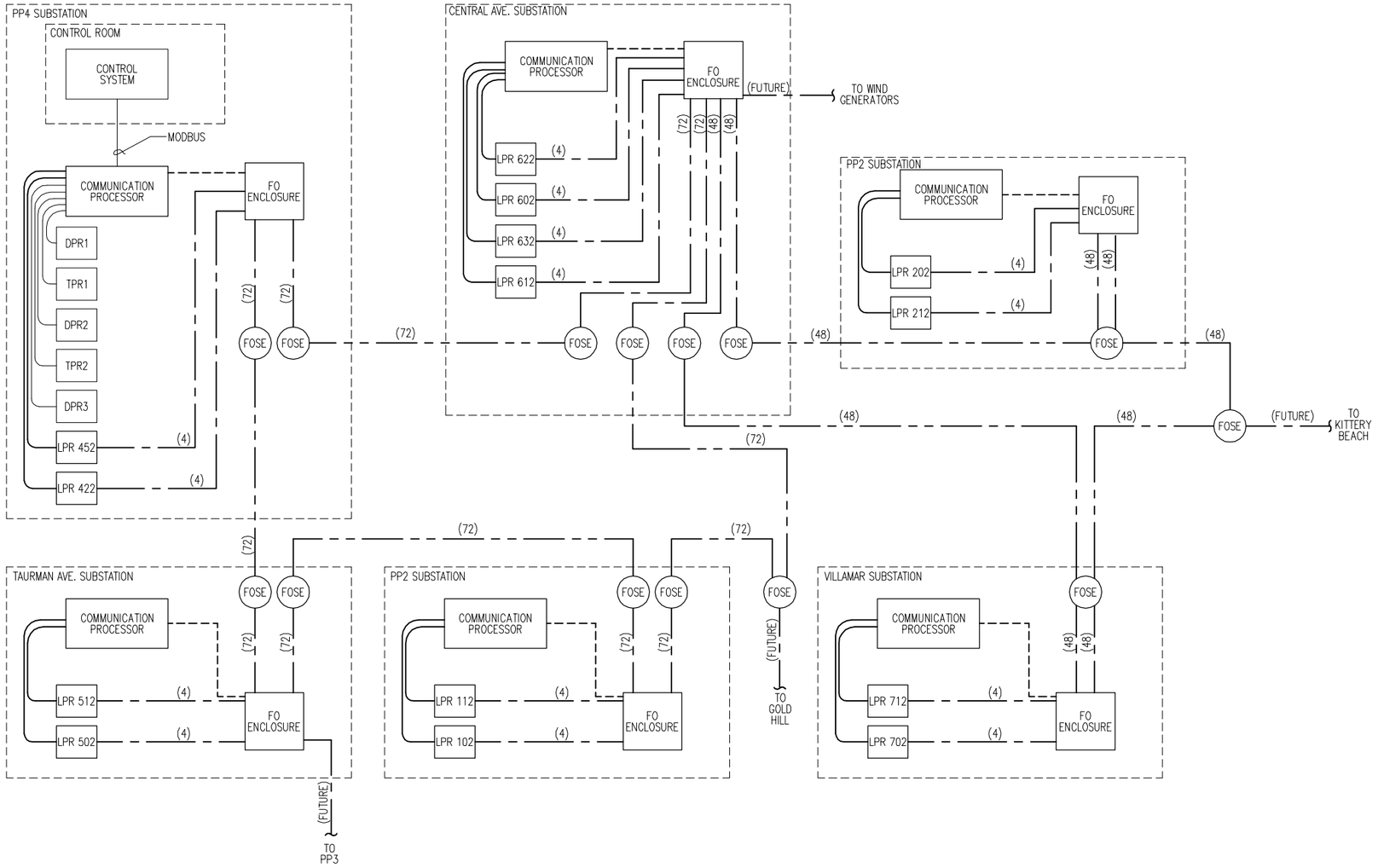


LEGEND

- EXISTING RS232
- RS232
- FO JUMPER
- (72) FO OSP WITH NUMBER OF FIBERS
- (72) FO OPGW WITH NUMBER OF FIBERS

| NO. | DESCRIPTION | DATE | APPR |
|---|---|---|---|
| | | | |

Stanley Consultants INC.

SEAL

APPROVED

ACTIVITY – SATISFACTORY TO

DATE

APPROVED

FOR EFD FOR COMMANDER NAVFAC

DATE

| A/E | | EFD |
|---|---|---|
| MLG | DESIGN | |
| RJH | DRAWN | |
| JCS | REVIEW | |
| MLG | QC | |
| | CHIEF ARCH./ ENGR. | |

PROJECT MANAGER

FIRE PROTECTION

BRANCH MANAGER

DESIGN DIRECTOR

DEPARTMENT OF THE NAVY
NAVAL FACILITIES ENGINEERING COMMAND
NAVAL STATION ATLANTIC DIVISION NORFOLK, VIRGINIA

U.S. NAVAL STATION GUANTANAMO BAY, CUBA

# 34.5 KV LINE DIFFERENTIAL SYSTEM

COMMUNICATION NETWORK DIAGRAM

CODE ID. NO. 80091 | SIZE D

SCALE: NONE

EFD NO.

STA. PROJ. NO. R6-95R1

SPEC. NO.

CONSTR. CONTR. NO. N62470-99-C-9147

NAVFAC DRAWING NO. 4501398

SHEET 31 OF 51

E-30

DRAWFORM REVISION SEPT 2001

REVDATE

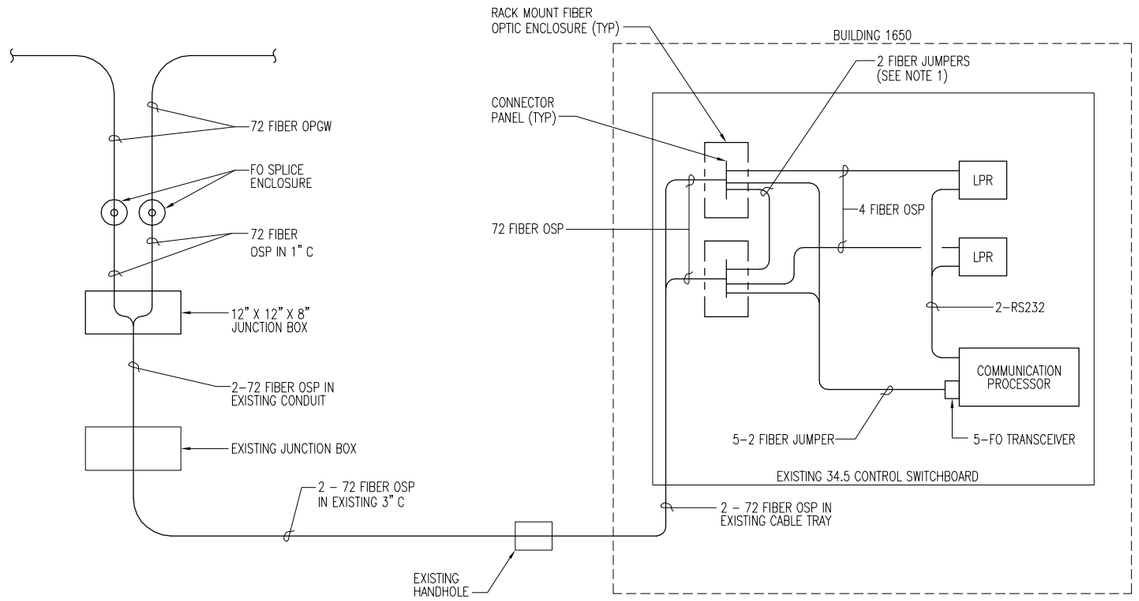


PP4 COMMUNICATION RISER DIAGRAM

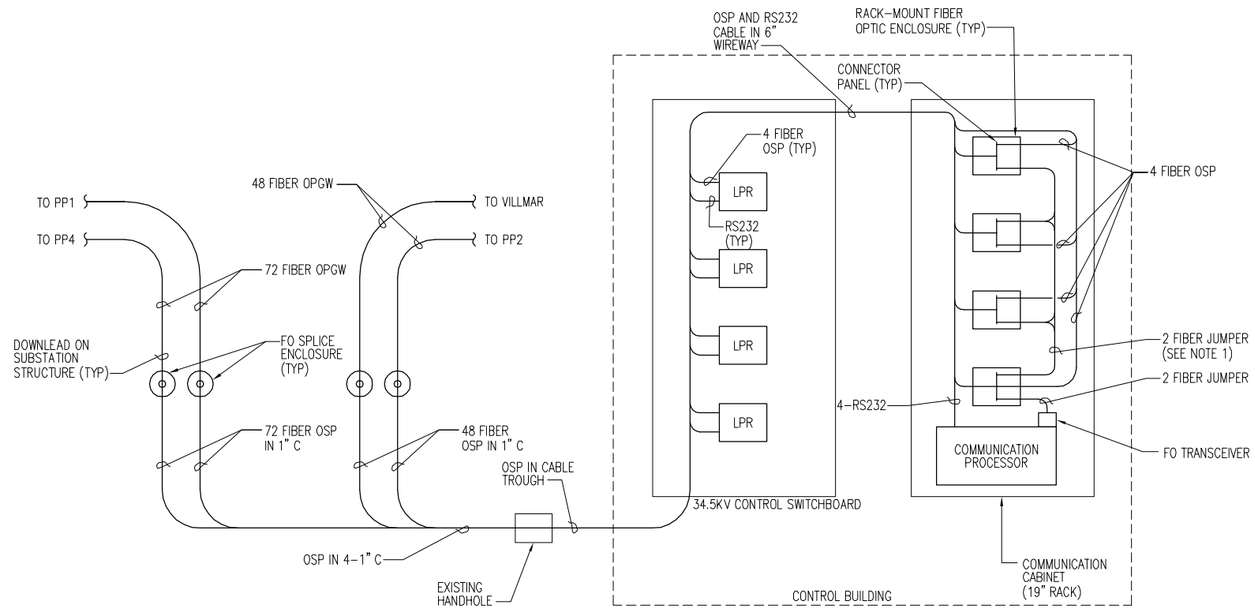


CENTRAL AVENUE COMMUNICATION RISER DIAGRAM

NOTES:
1. PROVIDE JUMPERS AS REQUIRED FOR SIGNAL CONTINUITY FROM SOURCE TO DESTINATION.

APPR | DATE | DESCRIPTION | SYM

Stanley Consultants INC.

SEAL

APPROVED
ACTIVITY – SATISFACTORY TO
DATE
APPROVED
FOR EFD FOR COMMANDER NAVFAC
DATE

| A/E | | EFD |
|---|---|---|
| MLG | DESIGN | |
| RJH | DRAWN | |
| JCS | REVIEW | |
| MLG | QC | |
| | CHIEF ARCH./ ENGR. | |

PROJECT MANAGER
FIRE PROTECTION
BRANCH MANAGER
DESIGN DIRECTOR

DEPARTMENT OF THE NAVY
NAVAL STATION
NAVAL FACILITIES ENGINEERING COMMAND
ATLANTIC DIVISION
NORFOLK, VIRGINIA
U.S. NAVAL STATION
GUANTANAMO BAY, CUBA

# 34.5 KV LINE DIFFERENTIAL SYSTEM

COMMUNICATION RISER DIAGRAMS – SHEET 1

CODE ID. NO. 80091 | SIZE D
SCALE: NONE
EFD NO.
STA. PROJ. NO. R6-95R1
SPEC. NO.
CONSTR. CONTR. NO. N62470-99-C-9147
NAVFAC DRAWING NO. 4501399
SHEET 32 OF 51

E-31

DRAWFORM REVISION SEPT 2001

REVDATE

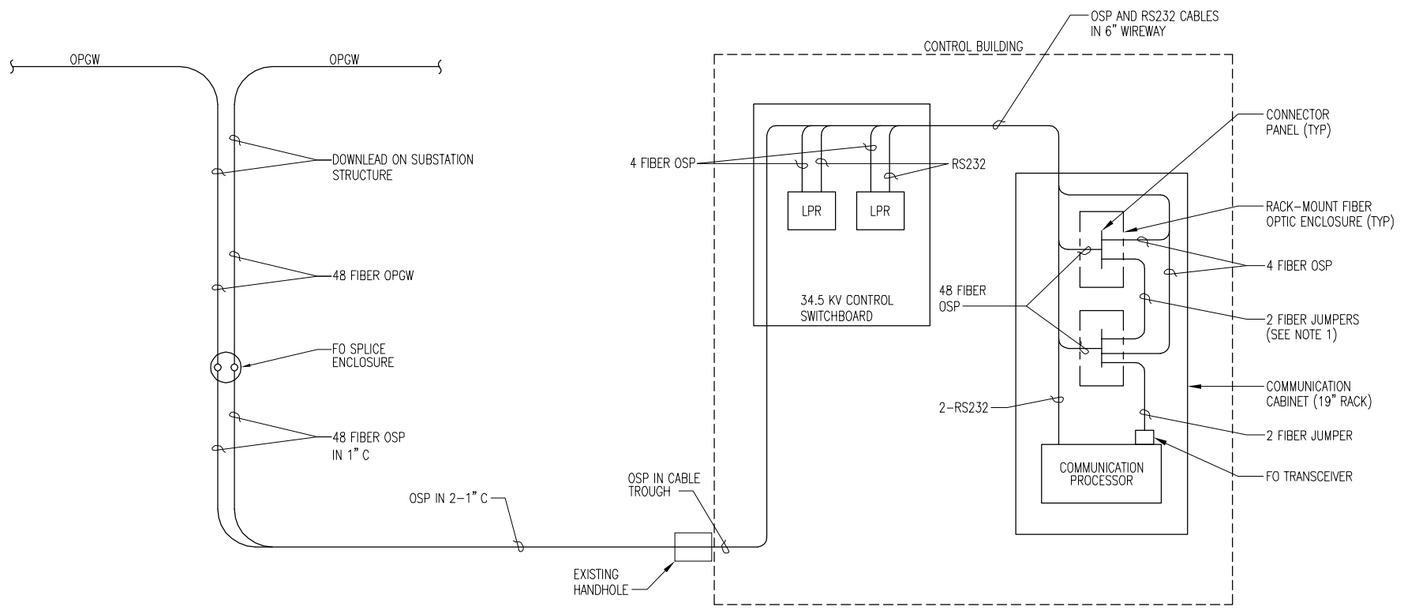


PP2 AND VILLAMAR COMMUNICATION RISER DIAGRAM

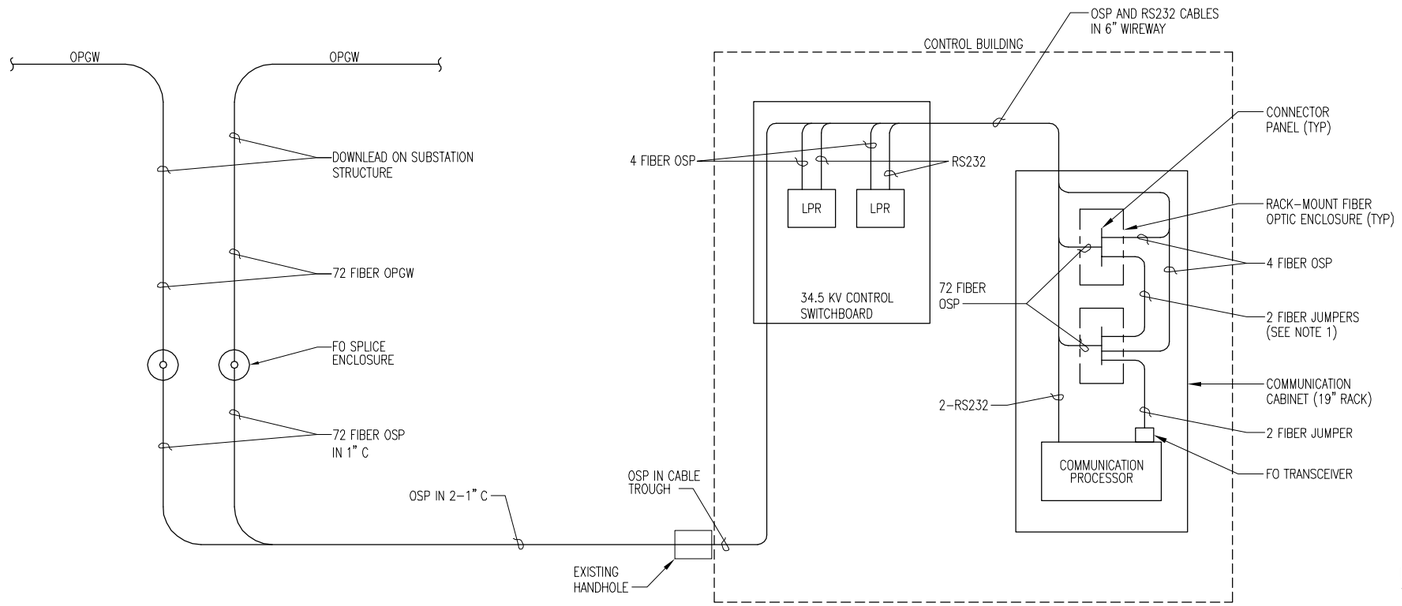


PP1 AND TAURMAN AVENUE COMMUNICATION RISER DIAGRAM

NOTES:
1. PROVIDE JUMPERS AS REQUIRED FOR SIGNAL CONTINUITY FROM SOURCE TO DESTINATION.

APPR | DATE | DESCRIPTION | SYM

Stanley Consultants INC.

SEAL

APPROVED
ACTIVITY – SATISFACTORY TO
DATE
APPROVED
FOR EFD FOR COMMANDER NAVFAC
DATE

| A/E | | EFD |
|---|---|---|
| MLG | DESIGN | |
| RJH | DRAWN | |
| JCS | REVIEW | |
| MLG | QC | |
| | CHIEF ARCH./ ENGR. | |

PROJECT MANAGER
FIRE PROTECTION
BRANCH MANAGER
DESIGN DIRECTOR

DEPARTMENT OF THE NAVY
NAVAL FACILITIES ENGINEERING COMMAND
NAVAL STATION ATLANTIC DIVISION
NORFOLK, VIRGINIA
U.S. NAVAL STATION GUANTANAMO BAY, CUBA

# 34.5 KV LINE DIFFERENTIAL SYSTEM

COMMUNICATION RISER DIAGRAMS – SHEET 2

CODE ID. NO. 80091 | SIZE D
SCALE: NONE
EFD NO.
STA. PROJ. NO. R6-95R1
SPEC. NO.
CONSTR. CONTR. NO. N62470-99-C-9147
NAVFAC DRAWING NO. 4501400
SHEET 33 OF 51

E-32

DRAWFORM REVISION SEPT 2001

REVDATE

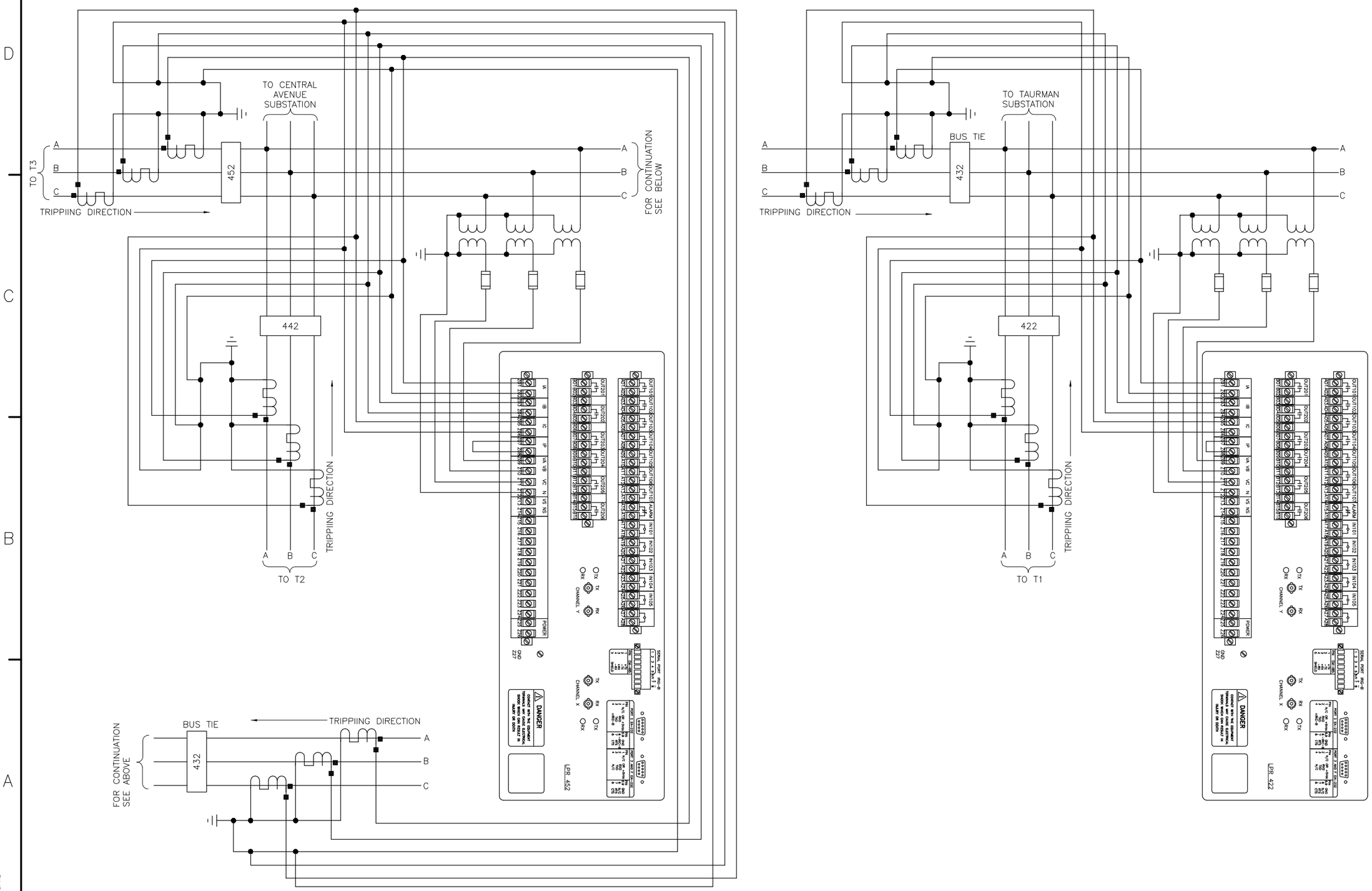


| SYM. | DESCRIPTION | DATE | APPR |
|---|---|---|---|

Stanley Consultants INC.

SEAL

APPROVED

ACTIVITY – SATISFACTORY TO

DATE

APPROVED

FOR EFD FOR COMMANDER NAVFAC

DATE

| A/E | | EFD |
|---|---|---|
| DPJ | DESIGN | |
| BKG | DRAWN | |
| MLG | REVIEW | |
| MLG | QC | |
| | CHIEF ARCH./ ENGR. | |

PROJECT MANAGER

FIRE PROTECTION

BRANCH MANAGER

DESIGN DIRECTOR

DEPARTMENT OF THE NAVY

NAVAL FACILITIES ENGINEERING COMMAND

ATLANTIC DIVISION

NORFOLK, VIRGINIA

NAVAL STATION

U.S. NAVAL STATION

GUANTANAMO BAY, CUBA

# 34.5 KV LINE DIFFERENTIAL SYSTEM

## PP4 SUBSTATION – AC SCHEMATIC

CODE ID. NO. 80091 | SIZE D

SCALE: NONE

EFD NO.

STA. PROJ. NO. R6-95R1

SPEC. NO.

CONSTR. CONTR. NO. N62470-99-C-9147

NAVFAC DRAWING NO. 4501401

SHEET 34 OF 51

E-33

DRAWFORM REVISION SEPT 2001

REVDATE

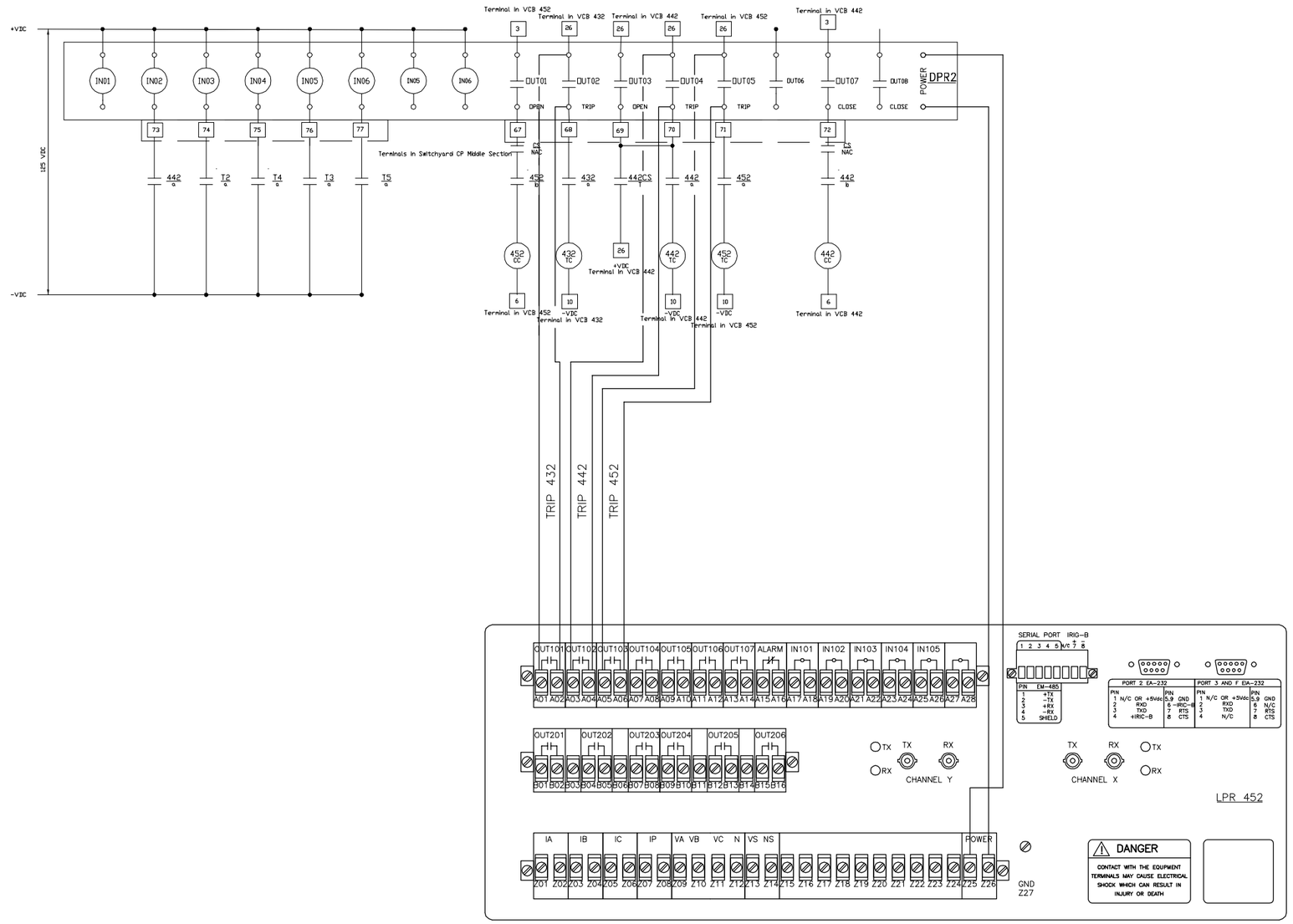


DC CONTROL SCHEMATIC
LINE TO CENTRAL AVE SUBSTATION

| REV | DATE | DESCRIPTION | APPR |
|---|---|---|---|

Stanley Consultants INC.

SEAL

APPROVED

ACTIVITY – SATISFACTORY TO

DATE

APPROVED

FOR EFD FOR COMMANDER NAVFAC

DATE

| A/E | EFD |
|---|---|
| DPJ | DESIGN |
| BKG | DRAWN |
| MLG | REVIEW |
| MLG | QC |
| | CHIEF ARCH./ ENGR. |

PROJECT MANAGER

FIRE PROTECTION

BRANCH MANAGER

DESIGN DIRECTOR

DEPARTMENT OF THE NAVY
NAVAL FACILITIES ENGINEERING COMMAND
NAVAL STATION ATLANTIC DIVISION
NORFOLK, VIRGINIA

U.S. NAVAL STATION GUANTANAMO BAY, CUBA

# 34.5 KV LINE DIFFERENTIAL SYSTEM

PP4 SUBSTATION – DC SCHEMATIC – SHEET 1

CODE ID. NO. 80091 SIZE D

SCALE: NONE

EFD NO.

STA. PROJ. NO. R6-95R1

SPEC. NO.

CONSTR. CONTR. NO.
N62470-99-C-9147

NAVFAC DRAWING NO.
4501402

SHEET 35 OF 51

E-34

DRAWFORM REVISION SEPT 2001

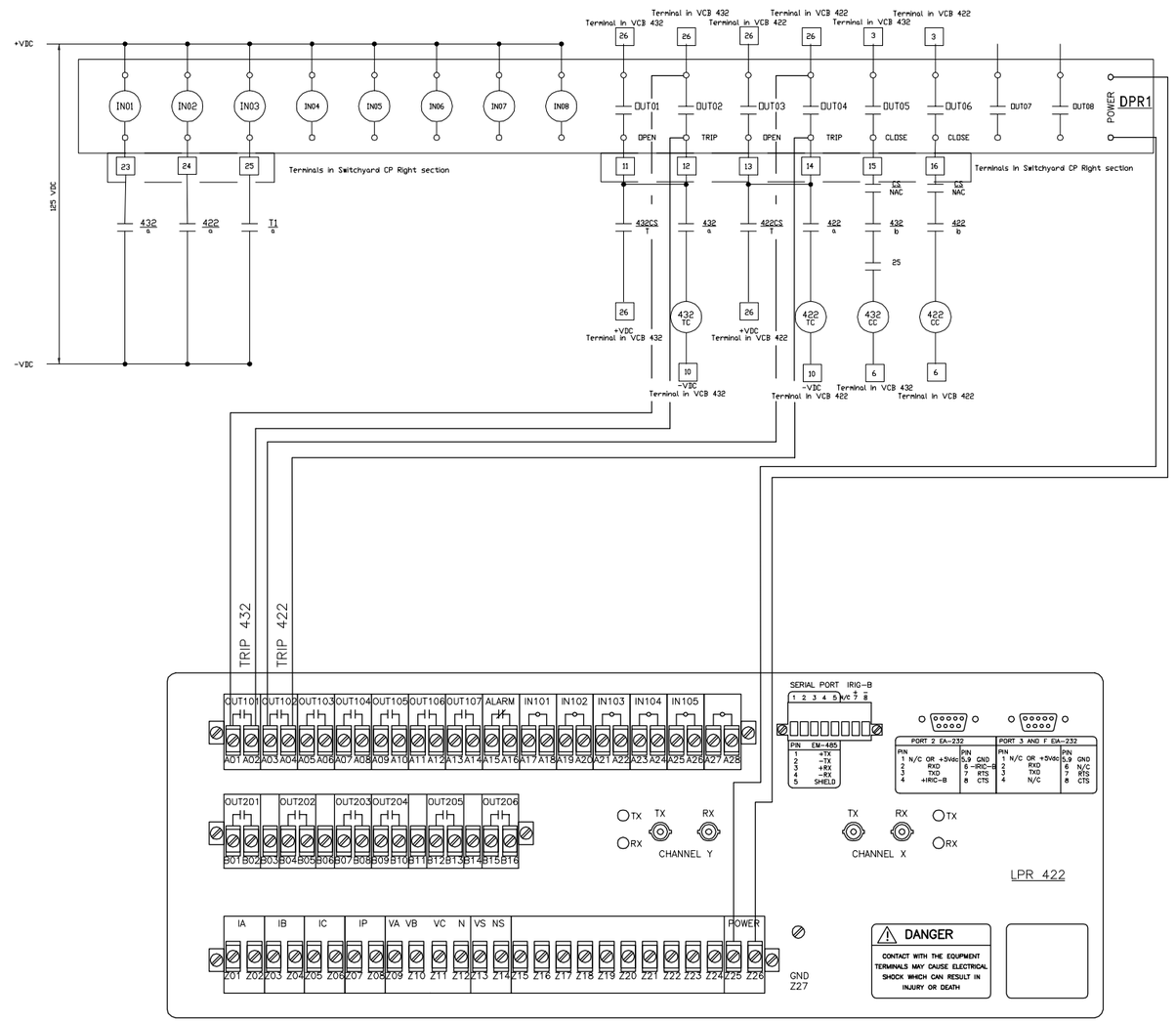


DC CONTROL SCHEMATIC
LINE TO TAURMAN AVE SUBSTATION

| REV | DATE | DESCRIPTION | APPR |
|---|---|---|---|

Stanley Consultants INC.

SEAL

APPROVED

ACTIVITY – SATISFACTORY TO

DATE

APPROVED

FOR EFD FOR COMMANDER NAVFAC

DATE

| A/E | EFD |
|---|---|
| DPJ | DESIGN |
| BKG | DRAWN |
| MLG | REVIEW |
| MLG | QC |
| | CHIEF ARCH./ ENGR. |

PROJECT MANAGER

FIRE PROTECTION

BRANCH MANAGER

DESIGN DIRECTOR

DEPARTMENT OF THE NAVY
NAVAL STATION
NAVAL FACILITIES ENGINEERING COMMAND
ATLANTIC DIVISION
NORFOLK, VIRGINIA
U.S. NAVAL STATION
GUANTANAMO BAY, CUBA

# 34.5 KV LINE DIFFERENTIAL SYSTEM

PP4 SUBSTATION – DC SCHEMATIC – SHEET 2

CODE ID. NO. 80091 | SIZE D

SCALE: NONE

EFD NO.

STA. PROJ. NO. R6-95R1

SPEC. NO.

CONSTR. CONTR. NO.
N62470-99-C-9147

NAVFAC DRAWING NO.
4501403

SHEET 36 OF 51

E-35

DRAWFORM REVISION SEPT 2001

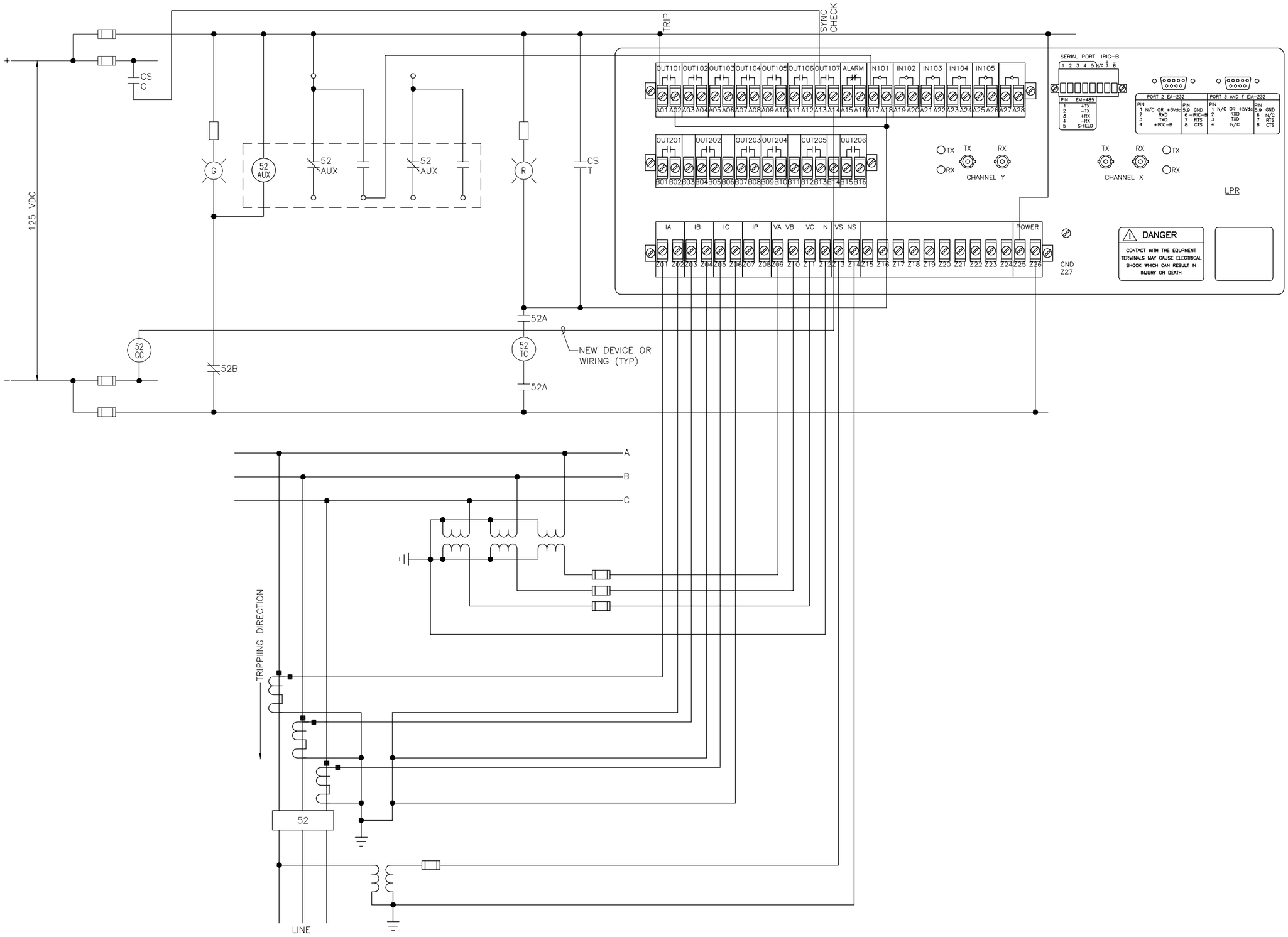


TYPICAL BREAKER AC AND DC SCHEMATIC

| REVDATE | DESCRIPTION | DATE | APPR |
|---|---|---|---|

Stanley Consultants INC.

SEAL

APPROVED

ACTIVITY – SATISFACTORY TO

DATE

APPROVED

FOR EFD FOR COMMANDER NAVFAC

DATE

| A/E | | EFD |
|---|---|---|
| DPJ | DESIGN | |
| BKG | DRAWN | |
| MLG | REVIEW | |
| MLG | QC | |
| | CHIEF ARCH./ ENGR. | |

PROJECT MANAGER

FIRE PROTECTION

BRANCH MANAGER

DESIGN DIRECTOR

DEPARTMENT OF THE NAVY
NAVAL STATION
NAVAL FACILITIES ENGINEERING COMMAND
ATLANTIC DIVISION
NORFOLK, VIRGINIA
U.S. NAVAL STATION
GUANTANAMO BAY, CUBA

# 34.5 KV LINE DIFFERENTIAL SYSTEM

TYPICAL AC AND DC SCHEMATIC

| | |
|---|---|
| CODE ID. NO. 80091 | SIZE D |
| SCALE: NONE | |
| EFD NO. | |
| STA. PROJ. NO. R6-95R1 | |
| SPEC. NO. | |
| CONSTR. CONTR. NO. N62470-99-C-9147 | |
| NAVFAC DRAWING NO. 4501404 | |
| SHEET 36 OF 51 | |

E-36

DRAWFORM REVISION SEPT 2001

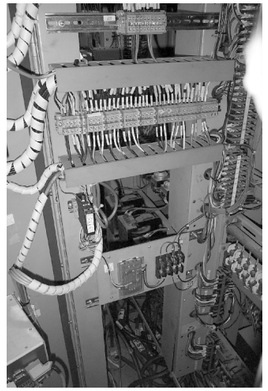

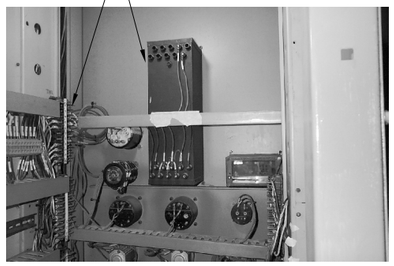

REMOVE EQUIPMENT COMPLETELY INCLUDING ALL WIRING TO TERMINAL BLOCKS

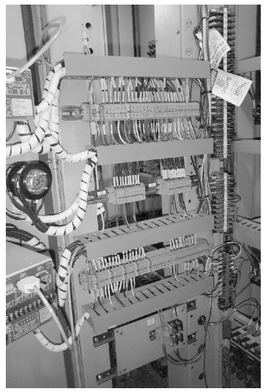

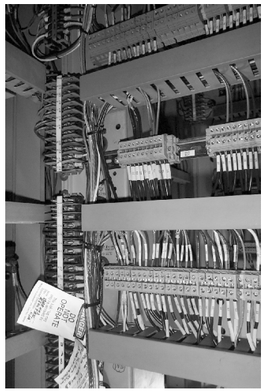

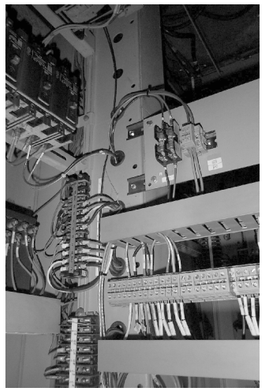

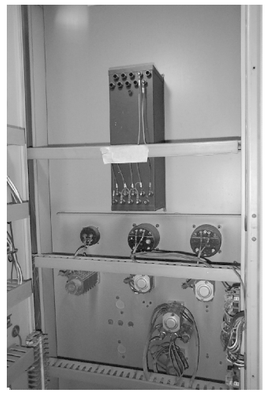

EXISTING TPR, DPR AND FPR ARE MOUNTED ON DOORS ON BACK OF EXISTING PANELS

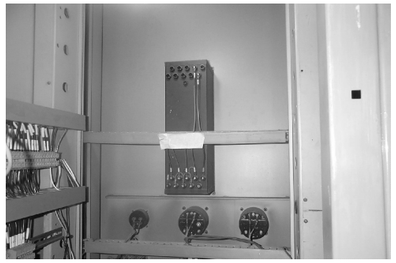

VT CIRCUIT FUSES

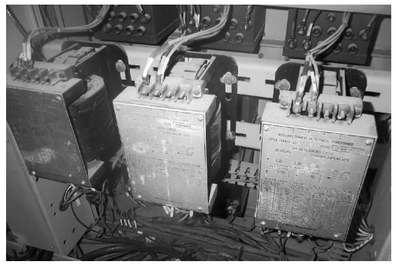

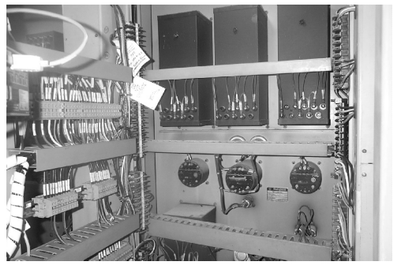

SHORTING TYPE CT TERMINAL BLOCK

| NO. | DESCRIPTION | DATE | APPR |
|---|---|---|---|
| | | | |

Stanley Consultants INC.

SEAL

APPROVED

ACTIVITY – SATISFACTORY TO

DATE

APPROVED

FOR EFD FOR COMMANDER NAVFAC

DATE

| A/E | EFD |
|---|---|
| DPJ | DESIGN |
| BKG | DRAWN |
| MLG | REVIEW |
| MLG | QC |
| | CHIEF ARCH./ ENGR. |

PROJECT MANAGER

FIRE PROTECTION

BRANCH MANAGER

DESIGN DIRECTOR

DEPARTMENT OF THE NAVY
NAVAL FACILITIES ENGINEERING COMMAND
NAVAL STATION ATLANTIC DIVISION NORFOLK, VIRGINIA
U.S. NAVAL STATION GUANTANAMO BAY, CUBA

# 34.5 KV LINE DIFFERENTIAL SYSTEM

PP4 SUBSTATION WIRING DETAILS

CODE ID. NO. 80091 | SIZE D

SCALE: NONE

EFD NO.

STA. PROJ. NO. R6-95R1

SPEC. NO.

CONSTR. CONTR. NO.
N62470-99-C-9147

NAVFAC DRAWING NO.
4501405

SHEET 38 OF 51

E-37

DRAWFORM REVISION SEPT 2001

REV/DATE

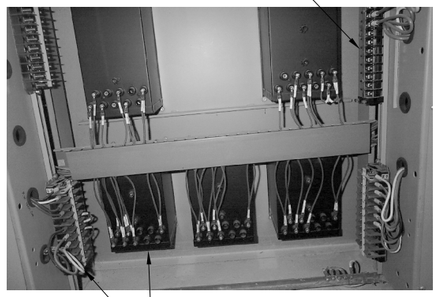


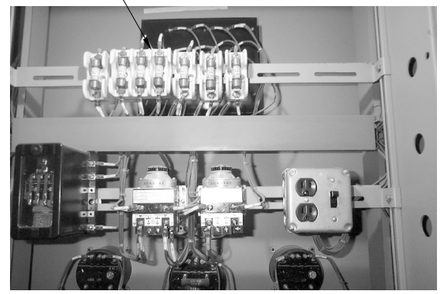


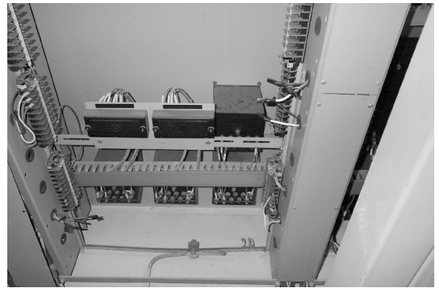

| REV | DATE | DESCRIPTION | BY | APPR |
|---|---|---|---|---|
| | | | | |

Stanley Consultants INC.

SEAL

APPROVED

ACTIVITY – SATISFACTORY TO

DATE

APPROVED

FOR EFD FOR COMMANDER NAVFAC

DATE

| A/E | EFD |
|---|---|
| DPJ | DESIGN |
| BKG | DRAWN |
| MLG | REVIEW |
| MLG | QC |
| | CHIEF ARCH./ ENGR. |

PROJECT MANAGER

FIRE PROTECTION

BRANCH MANAGER

DESIGN DIRECTOR

DEPARTMENT OF THE NAVY
NAVAL FACILITIES ENGINEERING COMMAND
ATLANTIC DIVISION
NORFOLK, VIRGINIA
NAVAL STATION
U.S. NAVAL STATION
GUANTANAMO BAY, CUBA

# 34.5 KV LINE DIFFERENTIAL SYSTEM

TYPICAL WIRING DETAILS

| | |
|---|---|
| CODE ID. NO. 80091 | SIZE D |
| SCALE: NONE | |
| EFD NO. | |
| STA. PROJ. NO. R6-95R1 | |
| SPEC. NO. | |
| CONSTR. CONTR. NO. N62470-99-C-9147 | |
| NAVFAC DRAWING NO. 4501406 | |
| SHEET 39 OF 51 | |

E-38

DRAWFORM REVISION SEPT 2001

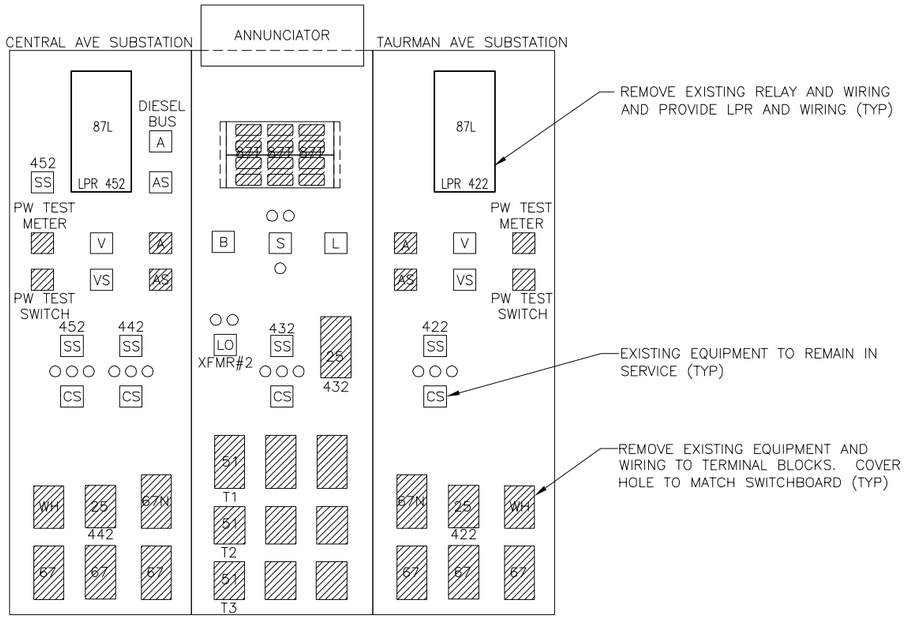


PANEL MODIFICATIONS
PP4 SUBSTATION

APPR | DATE | DESCRIPTION | SYM

Stanley Consultants INC.

SEAL

APPROVED
ACTIVITY – SATISFACTORY TO
DATE
APPROVED
FOR EFD FOR COMMANDER NAVFAC
DATE

| A/E | EFD |
|---|---|
| DPJ | DESIGN |
| RJH | DRAWN |
| MLG | REVIEW |
| MLG | QC |
| | CHIEF ARCH./ ENGR. |

PROJECT MANAGER
FIRE PROTECTION
BRANCH MANAGER
DESIGN DIRECTOR

DEPARTMENT OF THE NAVY
NAVAL FACILITIES ENGINEERING COMMAND
ATLANTIC DIVISION
NORFOLK, VIRGINIA
NAVAL STATION
U.S. NAVAL STATION
GUANTANAMO BAY, CUBA

# 34.5 KV LINE DIFFERENTIAL SYSTEM

SWITCHBOARD MODIFICATIONS – SHEET 1

CODE ID. NO. 80091 | SIZE D
SCALE: NONE
EFD NO.
STA. PROJ. NO. R6-95R1
SPEC. NO.
CONSTR. CONTR. NO.
N62470-99-C-9147
NAVFAC DRAWING NO.
4501407
SHEET 40 OF 51

E-39

DRAWFORM REVISION SEPT 2001

REVDATE

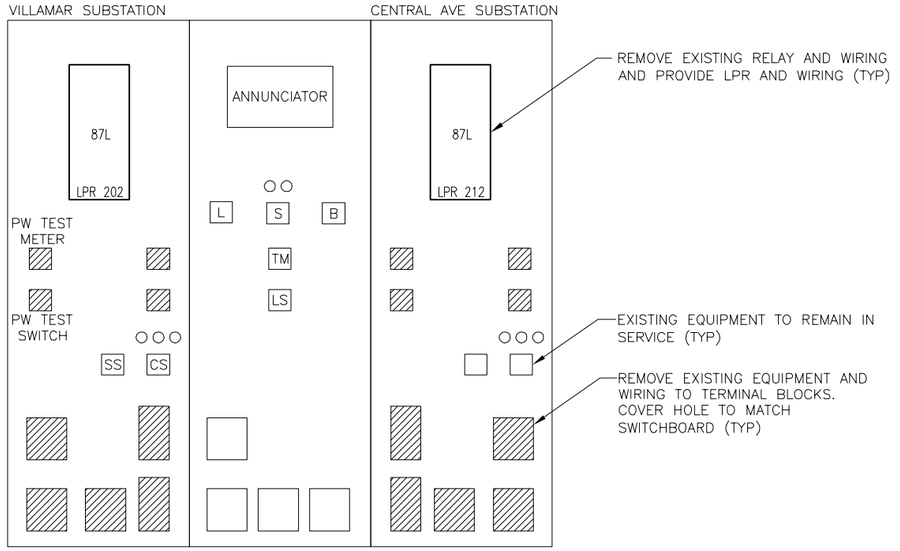


PANEL MODIFICATIONS
PP2 SUBSTATION

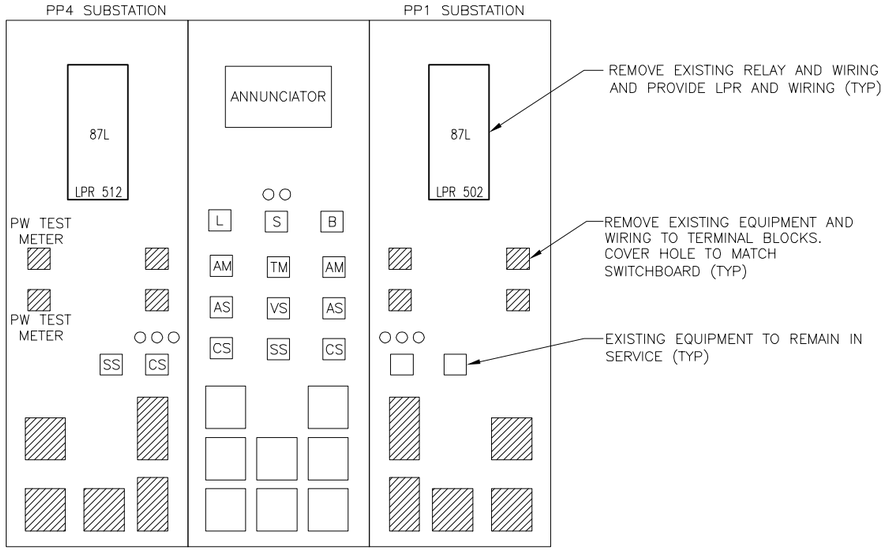


PANEL MODIFICATIONS
TAURMAN AVENUE SUBSTATION

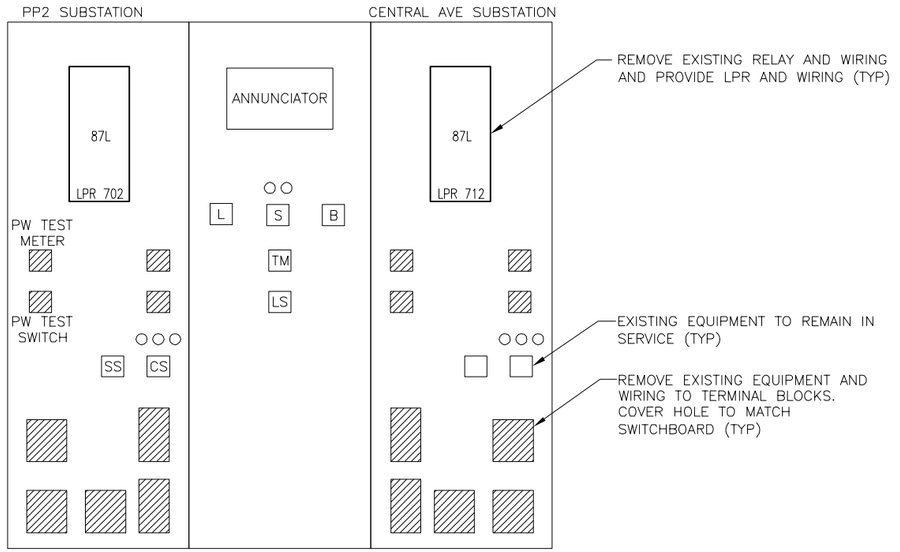


PANEL MODIFICATIONS
VILLAMAR SUBSTATION

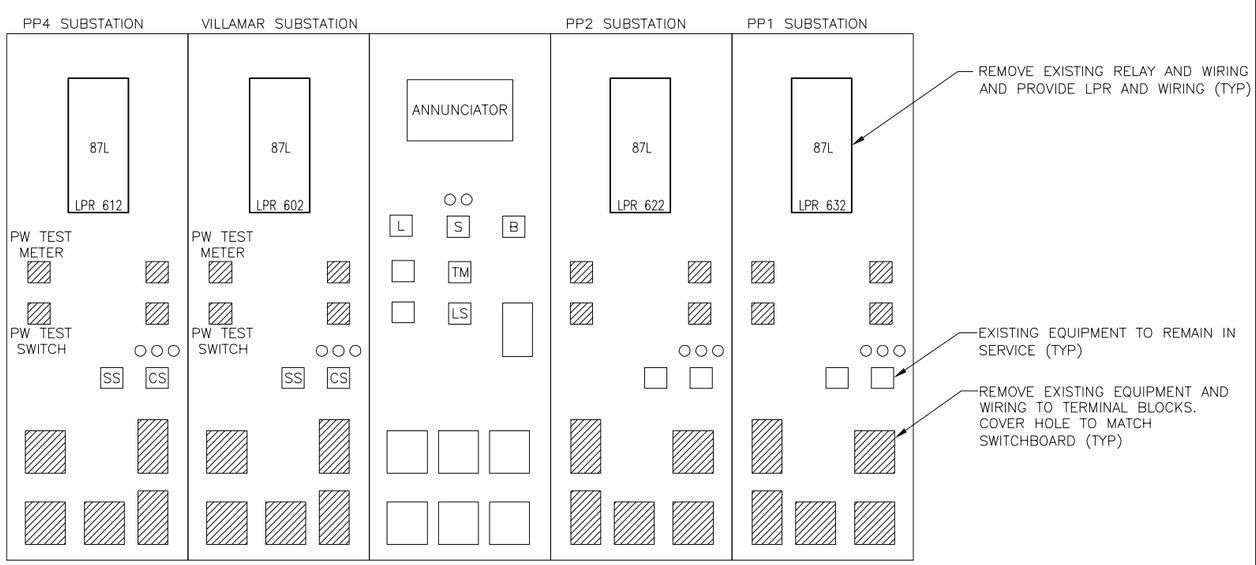


PANEL MODIFICATIONS
CENTRAL AVENUE SUBSTATION

| NO. | DESCRIPTION | DATE | APPR |
|---|---|---|---|
| | | | |

Stanley Consultants INC.

SEAL

APPROVED

ACTIVITY – SATISFACTORY TO

DATE

APPROVED

FOR EFD FOR COMMANDER NAVFAC

DATE

| A/E | | EFD |
|---|---|---|
| DPJ | DESIGN | |
| RJH | DRAWN | |
| MLG | REVIEW | |
| MLG | QC | |
| | CHIEF ARCH./ ENGR. | |

PROJECT MANAGER

FIRE PROTECTION

BRANCH MANAGER

DESIGN DIRECTOR

DEPARTMENT OF THE NAVY
NAVAL FACILITIES ENGINEERING COMMAND
NORFOLK, VIRGINIA
NAVAL STATION ATLANTIC DIVISION
U.S. NAVAL STATION GUANTANAMO BAY, CUBA

# 34.5 KV LINE DIFFERENTIAL SYSTEM

SWITCHBOARD MODIFICATIONS – SHEET 2

CODE ID. NO. 80091 | SIZE D

SCALE: NONE

EFD NO.

STA. PROJ. NO. R6-95R1

SPEC. NO.

CONSTR. CONTR. NO.
N62470-99-C-9147

NAVFAC DRAWING NO.
4501408

SHEET 41 OF 51

E-40

DRAWFORM REVISION SEPT 2001

REVDATE

| TUBE | FIBER | CIRCUIT TYPE | CIRCUIT DESCRIPTION | | | | | | |
|---|---|---|---|---|---|---|---|---|---|
| | | | OPGW SEGMENT PP4 TO TAURMAN AVE | OPGW SEGMENT TAURMAN AVE TO PP1 | OPGW SEGMENT PP1 TO CENTRAL AVE | OPGW SEGMENT CENTRAL AVE TO PP4 | OPGW SEGMENT CENTRAL AVE TO VILLAMAR | OPGW SEGMENT VILLAMAR TO PP2 | OPGW SEGMENT PP2 TO CENTRAL AVE |
| BLUE | BLUE | SCADA (SEE NOTE 3) | TAURMAN AVE | | | CENTRAL AVE | | | |
| BLUE | ORANGE | SCADA (SEE NOTE 3) | TAURMAN AVE | | | CENTRAL AVE | | | |
| BLUE | GREEN | SCADA (SEE NOTE 3) | PP1 | PP1 | | PP2 | | | PP2 |
| BLUE | BROWN | SCADA (SEE NOTE 3) | PP1 | PP1 | | PP2 | | | PP2 |
| BLUE | SLATE | SCADA (SEE NOTE 3) | | | | VILLAMAR | VILLAMAR | | |
| BLUE | WHITE | SCADA (SEE NOTE 3) | | | | VILLAMAR | VILLAMAR | | |
| BLUE | RED | | | | | | | | |
| BLUE | BLACK | | | | | | | | |
| BLUE | YELLOW | | | | | | | | |
| BLUE | VIOLET | | | | | | | | |
| BLUE | ROSE | | | | | | | | |
| BLUE | AQUA | | | | | | | | |
| ORANGE | BLUE | LINE DIFFERENTIAL | CH X LPR-422 TO LPR-512 | CH X LPR-502 TO LPR-112 | CH X LPR-102 TO LPR-632 | CH X LPR-612 TO LPR-452 | CH X LPR-602 TO LPR-712 | CH X LPR-202 TO LPR-702 | CH X LPR-622 TO LPR-212 |
| ORANGE | ORANGE | LINE DIFFERENTIAL | CH X LPR-422 TO LPR-512 | CH X LPR-502 TO LPR-112 | CH X LPR-102 TO LPR-632 | CH X LPR-612 TO LPR-452 | CH X LPR-602 TO LPR-712 | CH X LPR-202 TO LPR-702 | CH X LPR-622 TO LPR-212 |
| ORANGE | GREEN | LINE DIFFERENTIAL | | CH Y LPR-422 TO LPR-512 | CH Y LPR-422 TO LPR-512 | CH Y LPR-422 TO LPR-512 | CH Y LPR-622 TO LPR-212 | CH Y LPR-622 TO LPR-212 | |
| ORANGE | BROWN | LINE DIFFERENTIAL | | CH Y LPR-422 TO LPR-512 | CH Y LPR-422 TO LPR-512 | CH Y LPR-422 TO LPR-512 | CH Y LPR-622 TO LPR-212 | CH Y LPR-622 TO LPR-212 | |
| ORANGE | SLATE | LINE DIFFERENTIAL | CH Y LPR-502 TO LPR-112 | | CH Y LPR-502 TO LPR-112 | CH Y LPR-502 TO LPR-112 | CH Y LPR-202 TO LPR-702 | | CH Y LPR-202 TO LPR-702 |
| ORANGE | WHITE | LINE DIFFERENTIAL | CH Y LPR-502 TO LPR-112 | | CH Y LPR-502 TO LPR-112 | CH Y LPR-502 TO LPR-112 | CH Y LPR-202 TO LPR-702 | | CH Y LPR-202 TO LPR-702 |
| ORANGE | RED | LINE DIFFERENTIAL | CH Y LPR-102 TO LPR-632 | CH Y LPR-102 TO LPR-632 | | CH Y LPR-102 TO LPR-632 | | CH Y LPR-602 TO LPR-712 | CH Y LPR-602 TO LPR-712 |
| ORANGE | BLACK | LINE DIFFERENTIAL | CH Y LPR-102 TO LPR-632 | CH Y LPR-102 TO LPR-632 | | CH Y LPR-102 TO LPR-632 | | CH Y LPR-602 TO LPR-712 | CH Y LPR-602 TO LPR-712 |
| ORANGE | YELLOW | LINE DIFFERENTIAL | CH Y LPR-612 TO LPR-452 | CH Y LPR-612 TO LPR-452 | CH Y LPR-612 TO LPR-452 | | | | |
| ORANGE | VIOLET | LINE DIFFERENTIAL | CH Y LPR-612 TO LPR-452 | CH Y LPR-612 TO LPR-452 | CH Y LPR-612 TO LPR-452 | | | | |
| ORANGE | ROSE | | | | | | | | |
| ORANGE | AQUA | | | | | | | | |
| GREEN | BLUE | | | | | | | | |
| GREEN | ORANGE | | | | | | | | |
| GREEN | GREEN | | | | | | | | |
| GREEN | BROWN | | | | | | | | |
| GREEN | SLATE | | | | | | | | |
| GREEN | WHITE | | | | | | | | |
| GREEN | RED | | | | | | | | |
| GREEN | BLACK | | | | | | | | |
| GREEN | YELLOW | | | | | | | | |
| GREEN | VIOLET | | | | | | | | |
| GREEN | ROSE | | | | | | | | |
| GREEN | AQUA | | | | | | | | |
| BROWN | BLUE | | | | | | | | |
| BROWN | ORANGE | | | | | | | | |
| BROWN | GREEN | | | | | | | | |
| BROWN | BROWN | | | | | | | | |
| BROWN | SLATE | | | | | | | | |
| BROWN | WHITE | | | | | | | | |
| BROWN | RED | | | | | | | | |
| BROWN | BLACK | | | | | | | | |
| BROWN | YELLOW | | | | | | | | |
| BROWN | VIOLET | | | | | | | | |
| BROWN | ROSE | | | | | | | | |
| BROWN | AQUA | | | | | | | | |
| SLATE | BLUE | | | | | | | | |
| SLATE | ORANGE | | | | | | | | |
| SLATE | GREEN | | | | | | | | |
| SLATE | BROWN | | | | | | | | |
| SLATE | SLATE | | | | | | | | |
| SLATE | WHITE | | | | | | | | |
| SLATE | RED | | | | | | | | |
| SLATE | BLACK | | | | | | | | |
| SLATE | YELLOW | | | | | | | | |
| SLATE | VIOLET | | | | | | | | |
| SLATE | ROSE | | | | | | | | |
| SLATE | AQUA | | | | | | | | |
| WHITE | BLUE | | | | | | | | |
| WHITE | ORANGE | | | | | | | | |
| WHITE | GREEN | | | | | | | | |
| WHITE | BROWN | | | | | | | | |
| WHITE | SLATE | | | | | | | | |
| WHITE | WHITE | | | | | | | | |
| WHITE | RED | | | | | | | | |
| WHITE | BLACK | | | | | | | | |
| WHITE | YELLOW | | | | | | | | |
| WHITE | VIOLET | | | | | | | | |
| WHITE | ROSE | | | | | | | | |
| WHITE | AQUA | | | | | | | | |

NOTES:

1. PROVIDE JUMPERS AT EACH SUBSTATION AS REQUIRED FOR SIGNAL CONTINUITY FROM SOURCE TO DESTINATION.
2. PROVIDE 20 SPARE JUMPERS AT EACH SUBSTATION FOR FUTURE USE.
3. SCADA CIRCUITS REPRESENT CIRCUITS BETWEEN THE COMMUNICATION PROCESSOR AT THE SUBSTATION IDENTIFIED IN THE CIRCUIT DESCRIPTION AND THE COMMUNICATION PROCESSOR AT PP4.

APPR | DATE | DESCRIPTION | SYM

Stanley Consultants INC.

SEAL

APPROVED

ACTIVITY – SATISFACTORY TO

DATE

APPROVED

FOR EFD FOR COMMANDER NAVFAC

DATE

| A/E | | EFD |
|---|---|---|
| MLG | DESIGN | |
| RJH | DRAWN | |
| JCS | REVIEW | |
| MLG | QC | |
| | CHIEF ARCH./ ENGR. | |

PROJECT MANAGER

FIRE PROTECTION

BRANCH MANAGER

DESIGN DIRECTOR

DEPARTMENT OF THE NAVY
NAVAL FACILITIES ENGINEERING COMMAND
ATLANTIC DIVISION
NORFOLK, VIRGINIA
NAVAL STATION
U.S. NAVAL STATION
GUANTANAMO BAY, CUBA

# 34.5 KV LINE DIFFERENTIAL SYSTEM

FIBER SCHEDULE

CODE ID. NO. 80091 | SIZE D

SCALE: NONE

EFD NO.

STA. PROJ. NO. R6-95R1

SPEC. NO.

CONSTR. CONTR. NO.
N62470-99-C-9147

NAVFAC DRAWING NO.
4501409

SHEET 42 OF 51

E-41

DRAWFORM REVISION SEPT 2001

REVDATE

## POLE SCHEDULE
### CENTRAL AVENUE SUBSTATION TO VILLAMAR SUBSTATION

| POLE | MAP NO. | SPAN (FT) | LINE ANGLE | REMOVE | PROVIDE | COMMENTS |
|---|---|---|---|---|---|---|
| CA SUB STR | 10 | | | NOTE 1 | OPGW-DE<br>FOSE-3 | SEE CA SITE PLAN |
| F52A & B | 10 | 110 | | NOTE 1 | OPGW-DDE | REUSE STATIC WIRE DE AND CONDUCTOR ON SOUTH SPAN |
| F53 | 9 | 270 | 8 LT | NOTE 1 | OPGW-SS | |
| F54 | 9 | 300 | | NOTE 1 | OPGW-SS | |
| F55 | 9 | 300 | | NOTE 1 | OPGW-SS | |
| F56 | 9 | 300 | | NOTE 1 | OPGW-SS | |
| F57 | 9 | 300 | 10 RT | NOTE 1 | OPGW-SS | |
| F58 | 9 | 275 | 90 RT | NOTE 1 | OPGW-DDE | |
| F59 | 9 | 300 | | NOTE 1 | OPGW-SS | |
| F60 | 9 | 300 | | NOTE 1 | OPGW-SS | |
| F61 | 5 | 300 | | NOTE 1 | OPGW-SS | |
| F62 | 5 | 300 | | NOTE 1 | OPGW-SS | |
| F63 | 5 | 300 | | NOTE 1 | OPGW-SS | |
| F64 | 5 | 300 | | NOTE 1 | OPGW-SS | |
| F65 | 5 | 300 | | NOTE 1 | OPGW-SS | |
| F66 | 5 | 330 | | NOTE 1 | OPGW-SS | |
| F67 | 5 | 220 | | NOTE 1 | OPGW-SS | |
| F68 | 5 | 230 | | NOTE 1 | OPGW-SS | |
| F69 | 5 | 200 | 30 RT | NOTE 1 | OPGW-DS | |
| F70 | 5 | 300 | 22 RT | NOTE 1 | OPGW-SS | |
| F71 | 5 | 350 | | NOTE 1 | OPGW-SS | |
| F72 | 6 | 380 | | NOTE 1 | OPGW-SS | |
| F73 | 6 | 280 | | NOTE 1 | OPGW-SS | |
| F74 | 6 | 270 | | NOTE 1 | OPGW-SS | |
| F75 | 6 | 300 | | NOTE 1 | OPGW-SS | |
| F76 | 6 | 280 | | NOTE 1 | OPGW-SS | |
| F77 | 6 | 280 | | NOTE 1 | OPGW-SS | |
| F78 | 6 | 350 | 20 LT | NOTE 1 | OPGW-SS | |
| F79 | 6 | 200 | | NOTE 1 | OPGW-SS | |
| F80 | 6 | 220 | | NOTE 1 | OPGW-SS | |
| F81 | 6 | 200 | 15 RT | NOTE 1 | OPGW-SS | |
| F82 | 6 | 270 | | NOTE 1 | OPGW-SS | |
| F83 | 6 | 300 | | NOTE 1 | OPGW-SS | |
| F84 | 6 | 300 | | NOTE 1 | OPGW-SS | |
| F85 | 6 | 290 | 8 RT | NOTE 1 | OPGW-SS | |
| F86 | 6 | 240 | | NOTE 1 | OPGW-SS | |
| F87 | 6 | 220 | | NOTE 1 | OPGW-SS | |
| F88 | 6 | 360 | | NOTE 1 | OPGW-SS | |
| F89 | 6 | 320 | | NOTE 1 | OPGW-SS | |
| F90 | 6 | 220 | | NOTE 1 | OPGW-SS | |
| F91 | 6 | 300 | | NOTE 1 | OPGW-SS | |
| F92 | 6 | 310 | | NOTE 1 | OPGW-SS | |
| F93 | 6 | 300 | | NOTE 1 | OPGW-SS | |
| F94 | 3 | 200 | 60 RT | NOTE 1 | OPGW-DDE | |
| F95 | 6 | 200 | | NOTE 1 | OPGW-SS | |
| F96 | 6 | 180 | | NOTE 1 | OPGW-SS | |
| F97 | 6 | 300 | | NOTE 1 | OPGW-DDE | REUSE STATIC WIRE DE AND CONDUCTOR ON WEST SPAN TO SUB. |
| VILLAMAR SUB STR | 6 | 60 | | NOTE 1 | OPGW-DE<br>FOSE-2 | SEE VILLAMAR SUB SITE PLAN. |
| TOTAL DISTANCE | | 12895 | | | | |

## POLE SCHEDULE
### POWER PLANT 2 SUBSTATION TO CENTRAL AVENUE SUBSTATION

| POLE | MAP NO. | SPAN (FT) | LINE ANGLE | REMOVE | PROVIDE | COMMENTS |
|---|---|---|---|---|---|---|
| PP2 SUB STR | | | | NOTE 1 | OPGW-DE | SEE PP2 SITE PLAN |
| EE16 | 6 | 110 | | NOTE 1 | OPGW-DDE | REUSE STATIC WIRE DE AND CONDUCTOR ON WEST SPAN. |
| EE15 | 6 | 180 | | NOTE 1 | OPGW-SS | |
| EE14 | 6 | 200 | | NOTE 1 | OPGW-SS | |
| EE13 | 6 | 200 | | NOTE 1 | OPGW-SS | |
| EE12 | 6 | 220 | 90 RT | NOTE 1<br><br>REMOVE TOP AND<br><br>MIDDLE PH GUYS AND ACHORS | OPGW-DDE<br><br>2) GUY-I<br><br>2) ANCHOR | REUSE STATIC SPAN GUY AND BOTTOM PHASE GUY.<br>ADD TOP AND MIDDLE PHASE GUYS<br><br>ADD ANCHORS, 40 AND 45 FT, BACK |
| EE11A | 6 | | 55 RT | | POLE 65-2<br><br>OPGW-DDE<br><br><br>VA3<br>2) SPAN GUY-I<br>GROUND | SET POLE SUCH THAT EXISTING TELEPHONE POLE IS ON BISECTOR.<br>SPLICE IN PHASE CONDUCTOR LENGTHS AS NEEDED. REFER TO DRAWING E-46 FOR PHASE CONDUCTOR SAG<br>VERIFY CONDUCTOR SIZE.<br>ATTACH SPAN GUYS 2 FT BELOW OPGW AND 2 FT BELOW MIDDLE PHASE. |
| STUB | 6 | | | | 2) GUY<br>2) ANCHOR | USE EXISTING 35-3 TELEPHONE PHONE AS STUB.<br>ADD ANCHORS, 25 FT LEAD, BISECTOR, SPREAD 5 FT |
| EE11 | 6 | 640 | 61 LT | NOTE 1 | OPGW-DDE | |
| EE10 | 6 | 210 | | NOTE 1 | OPGW-SS | |
| EE9 | 6 | 340 | | NOTE 1 | OPGW-SS | |
| EE7 | 6 | 500 | 44 LT | NOTE 1 | OPGW-DDE | |
| EE6 | 6 | 280 | | NOTE 1 | OPGW-SS | |
| EE5 | 6 | 300 | | NOTE 1<br>CROSSARM | OPGW-SS<br>X10-AB | REINSTALL INSULATORS ON NEW CROSSARM. |
| EE4 | 10 | 340 | | NOTE 1<br>CROSSARM | OPGW-SS<br>X10-AB | REINSTALL INSULATORS ON NEW CROSSARM. |
| EE3 | 10 | 225 | | NOTE 1<br>CROSSARM | OPGW-SS<br>X10-AB | REINSTALL INSULATORS ON NEW CROSSARM. |
| EE2L | 10 | 350 | | NOTE 1 | OPGW-SS | |
| EE2 | 10 | 100 | 90 RT | NOTE 1 | OPGW-DDE | |
| EE1 | 10 | 200 | | NOTE 1 | OPGW-DDE | REUSE STATIC WIRE DE AND CONDUCTOR ON N |
| CA SUB STR | 10 | 50 | | NOTE 1 | OPGW-DE<br>FOSE-3 | SEE CENTRAL AVENUE SUB SITE PLAN. |
| TOTAL DISTANCE | | 4445 | | | | |

NOTES:

1. REMOVE 5/16" EHS STATIC WIRE AND ATTACHMENT HARDWARE.
2. SPAN LENGTHS AND LINE ANGLES ARE APPROXIMATE. PROVIDE MEASURED LENGTHS AND ANGLES WITH RECORD DRAWINGS. DO NOT EXCEED 30° ANGLE FOR OPGW-SS ASSEMBLY. DO NOT EXCEED 60° ANGLE FOR OPGW-DS ASSEMBLY.
3. USED REDUCED TENSION FOR SUBSTATION STRUCTURE PULL-OFFS.
4. OPGW-SS, X10-AB, ETC. ARE POLE DETAIL DESIGNATION SYMBOLS. REFER TO DRAWINGS E-47, E-48 AND E-49 FOR AN EXPLANATION OF THE USE AND DESCRIPTION OF EQUIPMENT PROVIDED BY THESE SYMBOLS.
5. PROVIDE GUYS AND ANCHORS AS REQUIRED TO MEET GRADE B GUYING. REFER TO DRAWING E-46 FOR GRADE B GUY LEAD SCHEDULE AND ESTIMATED QUANTITY OF GUYS AND ANCHORS TO BE PROVIDED IN ADDITION TO QUANTITIES SHOWN ON POLE SCHEDULES.

APPR | DATE | DESCRIPTION | SYM

Stanley Consultants INC.

SEAL

APPROVED

ACTIVITY – SATISFACTORY TO

DATE

APPROVED

FOR EFD FOR COMMANDER NAVFAC

DATE

| A/E | EFD |
|---|---|
| MLG | DESIGN |
| RJH | DRAWN |
| MGS | REVIEW |
| MLG | QC |
| | CHIEF ARCH / ENGR. |

PROJECT MANAGER

FIRE PROTECTION

BRANCH MANAGER

DESIGN DIRECTOR

DEPARTMENT OF THE NAVY
NAVAL STATION
NAVAL FACILITIES ENGINEERING COMMAND
ATLANTIC DIVISION
NORFOLK, VIRGINIA
U.S. NAVAL STATION
GUANTANAMO BAY, CUBA

# 34.5 KV LINE DIFFERENTIAL SYSTEM

POLE SCHEDULES – SHEET 1

CODE ID. NO. 80091 | SIZE D

SCALE: NONE

EFD NO.

STA. PROJ. NO. R6-95R1

SPEC. NO.

CONSTR. CONTR. NO.
N62470-99-C-9147

NAVFAC DRAWING NO.
4501410

SHEET 43 OF 51

E-42

DRAWFORM REVISION SEPT 2001

REV/DATE

| POLE SCHEDULE<br>VILLAMAR SUBSTATION TO PP2 SUBSTATION | | | | | | |
|---|---|---|---|---|---|---|
| POLE | MAP NO. | SPAN (FT) | LINE ANGLE | REMOVE | PROVIDE | COMMENTS |
| | | | | | | |
| VILLAMAR SUB STR | 6 | | | NOTE 1 | OPGW-DE | SEE VILLAMAR SITE PLAN. |
| E2 | 6 | 60 | | NOTE 1 | OPGW-DDE | REUSE STATIC WIRE DE AND CONDUCTOR ON EAST SPAN. |
| E1 | 7 | 70 | | NOTE 1<br>STATIC EXT BRKT | OPGW-EXT1<br>OGPGW-SS | |
| E3 | 7 | 100 | | NOTE 1<br>STATIC EXT BRKT | OPGW-EXT1<br>OGPGW-SS | |
| E4 | 7 | 120 | | NOTE 1<br>STATIC EXT BRKT | OPGW-EXT1<br>OGPGW-SS | |
| E5 | 7 | 140 | | NOTE 1<br>STATIC EXT BRKT | OPGW-EXT1<br>OGPGW-SS | |
| E6 | 7 | 150 | | NOTE 1<br>STATIC EXT BRKT | OPGW-EXT1<br>OGPGW-SS | |
| E7 | 7 | 140 | | NOTE 1<br>STATIC EXT BRKT | OPGW-EXT1<br>OGPGW-SS | |
| E8 | 7 | 140 | | NOTE 1<br>STATIC EXT BRKT | OPGW-EXT1<br>OGPGW-SS | |
| E9 | 7 | 140 | | NOTE 1<br>STATIC EXT BRKT | OPGW-EXT1<br>OGPGW-SS | |
| E10 | 7 | 140 | | NOTE 1<br>STATIC EXT BRKT | OPGW-EXT1<br>OGPGW-SS | |
| E11 | 7 | 180 | | NOTE 1<br>STATIC EXT BRKT | OPGW-EXT1<br>OGPGW-SS | |
| E12 | 7 | 220 | | NOTE 1<br>STATIC EXT BRKT | OPGW-EXT1<br>OGPGW-SS | |
| E13 | 7 | 180 | 90 LT | NOTE 1<br>POLE 40'-3<br>2) HORIZONTAL<br>DEADENDS<br>GUYS AND<br>ANCHORS | POLE 50'-2<br>OPGW-DDE<br>2) DX10-DE-AB-BOX-HD<br>2) FDE3<br><br>3) GUY-I<br>3) ANCHOR<br><br>3) GUY-I<br>3) ANCHOR<br>GROUND | TOP ARM 5 FT BELOW POLE TOP<br>FOR CKT TO NORTH.<br><br>BOTTOM ARM 9 FT BELOW POLE TOP.<br>GUYS TO SOUTH ATTACHED<br>9", 1'-6", AND 2'-3" BELOW TOP ARM.<br>ANCHORS AT 25, 20, AND 15 FT SOUTH.<br>GUYS TO WEST ATTACHED 4 FT BELOW POLE TOP<br>AND 9" AND 1'-6" BELOW BOTTOM ARM.<br>ANCHORS AT 22, 17, AND 12 FT WEST.<br>REINSTALL VERTICAL POST INSULATORS FOR<br>JUMPER SUPPORTS. |
| E14 | 7 | 130 | | NOTE 1<br>STATIC EXT BRKT | OPGW-EXT1<br>OGPGW-SS | |
| E15 | 7 | 160 | | NOTE 1 | OPGW-SS | |
| E16 | 7 | 150 | 90 RT | NOTE 1 | OPGW-DDE | |
| E17 | 7 | 240 | | NOTE 1<br>STATIC EXT BRKT | OPGW-EXT1<br>OGPGW-SS | |
| E18 | 7 | 240 | | NOTE 1<br>STATIC EXT BRKT | OPGW-EXT1<br>OGPGW-SS | |
| E19 | 7 | 250 | 20 LT | NOTE 1<br>STATIC EXT BRKT | OPGW-EXT2<br>OGPGW-SS | |
| E20 | 7 | 170 | 23 LT | NOTE 1<br>STATIC EXT BRKT | OPGW-EXT2<br>OGPGW-SS | |
| E21 | 7 | 170 | | NOTE 1 | OPGW-SS | |
| E22 | 7 | 190 | | NOTE 1 | OPGW-SS | |
| E23 | 7 | 160 | | NOTE 1 | OPGW-SS | |
| E24 | 7 | 160 | | NOTE 1 | OPGW-SS | |
| E25 | 7 | 200 | | NOTE 1 | OPGW-DDE<br>FOSE-1 | KITTERY BEACH SWITCH POLE<br>REUSE STATIC WIRE DEADEND TO EAST. |

| POLE SCHEDULE<br>VILLAMAR SUBSTATION TO PP2 SUBSTATION | | | | | | |
|---|---|---|---|---|---|---|
| POLE | MAP NO. | SPAN (FT) | LINE ANGLE | REMOVE | PROVIDE | COMMENTS |
| KB1 | 7 | 190 | | NOTE 1 | OPGW-SS | |
| KB2 | 7 | 170 | | NOTE 1 | OPGW-SS | |
| KB3 | 7 | 180 | 90 RT | NOTE 1 | OPGW-DDE | |
| KB4 | 7 | 180 | | NOTE 1 | OPGW-SS | |
| KB5 | 7 | 180 | 20 RT | NOTE 1 | OPGW-SS | |
| KB6 | 7 | 180 | | NOTE 1 | OPGW-SS | |
| KB7 | 7 | 180 | | NOTE 1 | OPGW-SS | |
| KB8 | 7 | 180 | | NOTE 1 | OPGW-SS | |
| KB9 | 7 | 180 | | NOTE 1 | OPGW-SS | |
| KB10 | 7 | 180 | 30 RT | NOTE 1 | OPGW-DS | |
| KB11 | 6 | 220 | 15 LT | NOTE 1 | OPGW-SS | |
| KB12 | 6 | 210 | 3 LT | NOTE 1 | OPGW-SS | |
| KB13 | 6 | 210 | | NOTE 1 | OPGW-SS | |
| KB14 | 6 | 210 | | NOTE 1 | OPGW-SS | |
| KB15 | 6 | 210 | 20 LT | NOTE 1 | OPGW-SS | |
| KB16 | 6 | 240 | 20 LT | NOTE 1 | OPGW-SS | |
| KB17 | 6 | 220 | | NOTE 1 | OPGW-SS | |
| KB18 | 6 | 200 | | NOTE 1 | OPGW-SS | |
| KB19 | 6 | 240 | 40 RT | NOTE 1 | OPGW-SS | |
| KB20 | 6 | 200 | | NOTE 1 | OPGW-SS | |
| KB21 | 6 | 170 | | NOTE 1 | OPGW-SS | |
| KB22 | 6 | 200 | | NOTE 1 | OPGW-SS | |
| KB23 | 6 | 190 | | NOTE 1 | OPGW-SS | |
| KB24 | 6 | 190 | 5 RT | NOTE 1 | OPGW-SS | |
| KB25 | 6 | 200 | | NOTE 1 | OPGW-SS | |
| KB26 | 6 | 200 | | NOTE 1 | OPGW-SS | |
| KB27 | 6 | 200 | | NOTE 1 | OPGW-SS | |
| KB28 | 6 | 200 | | NOTE 1 | OPGW-SS | |
| KB29 | 6 | 192 | | NOTE 1 | OPGW-SS | |
| KB30 | 6 | 200 | 8 LT | NOTE 1 | OPGW-SS | |
| KB31 | 6 | 200 | | NOTE 1 | OPGW-SS | |
| KB32 | 6 | 200 | | NOTE 1 | OPGW-SS | |
| KB33 | 6 | 200 | 30 RT | NOTE 1 | OPGW-DS | |
| KB34 | 6 | 120 | | NOTE 1 | OPGW-SS | |
| KB35 | 6 | 140 | 70 RT | NOTE 1 | OPGW-DDE | |
| KB36 | 6 | 270 | | NOTE 1 | OPGW-SS | |
| KB37 | 6 | 280 | 40 LT | NOTE 1 | OPGW-DDE | |
| KB38 | 6 | 310 | 5-10 RT | NOTE 1 | OPGW-SS | |
| KB39 | 6 | 230 | | NOTE 1 | OPGW-SS | |
| KB40 | 6 | 260 | | NOTE 1 | OPGW-DDE | REUSE STATIC WIRE DE AND CONDUCTOR ON EAST SPAN TO SUB. |
| PP2 SUB STR | 6 | | | NOTE 1 | OPGW-DE<br>FOSE-2 | SEE PP2 SUB SITE PLAN. |
| TOTAL DISTANCE | | 12092 | | | | |

NOTES:

1. REMOVE 5/16" EHS STATIC WIRE AND ATTACHMENT HARDWARE.
2. SPAN LENGTHS AND LINE ANGLES ARE APPROXIMATE. PROVIDE MEASURED LENGTHS AND ANGLES WITH RECORD DRAWINGS. DO NOT EXCEED 30° ANGLE FOR OPGW-SS ASSEMBLY. DO NOT EXCEED 60° ANGLE FOR OPGW-DS ASSEMBLY.
3. USED REDUCED TENSION FOR SUBSTATION STRUCTURE PULL-OFFS.
4. OPGW-SS, X10-AB, ETC. ARE POLE DETAIL DESIGNATION SYMBOLS. REFER TO DRAWINGS E-47, E-48 AND E-49 FOR AN EXPLANATION OF THE USE AND DESCRIPTION OF EQUIPMENT PROVIDED BY THESE SYMBOLS.
5. PROVIDE GUYS AND ANCHORS AS REQUIRED TO MEET GRADE B GUYING. REFER TO DRAWING E-46 FOR GRADE B GUY LEAD SCHEDULE AND ESTIMATED QUANTITY OF GUYS AND ANCHORS TO BE PROVIDED IN ADDITION TO QUANTITIES SHOWN ON POLE SCHEDULES.

APPR | DATE | DESCRIPTION | SYM

Stanley Consultants INC.

SEAL

APPROVED

ACTIVITY – SATISFACTORY TO

DATE

APPROVED

FOR EFD FOR COMMANDER NAVFAC

DATE

| A/E | EFD |
|---|---|
| MLG | DESIGN |
| RJH | DRAWN |
| MGS | REVIEW |
| MLG | QC |
| | CHIEF ARCH./ ENGR. |
| PROJECT MANAGER | |
| FIRE PROTECTION | |
| BRANCH MANAGER | |
| DESIGN DIRECTOR | |

DEPARTMENT OF THE NAVY
NAVAL STATION
U.S. NAVAL STATION
GUANTANAMO BAY, CUBA
ATLANTIC DIVISION
NAVAL FACILITIES ENGINEERING COMMAND
NORFOLK, VIRGINIA

34.5 KV LINE DIFFERENTIAL SYSTEM

POLE SCHEDULES – SHEET 2

CODE ID. NO. 80091 | SIZE D

SCALE: NONE

EFD NO.

STA. PROJ. NO. R6-95R1

SPEC. NO.

CONSTR. CONTR. NO.
N62470-99-C-9147

NAVFAC DRAWING NO.
4501411

SHEET 44 OF 51

E-43

DRAWFORM REVISION SEPT 2001

REVDATE

## POLE SCHEDULE
### CENTRAL AVENUE SUBSTATION TO PP1 SUBSTATION

| POLE | MAP NO. | SPAN (FT) | LINE ANGLE | REMOVE | PROVIDE | COMMENTS |
|---|---|---|---|---|---|---|
| CA SUB STR | 10 | | | NOTE 1 | OPGW-DE<br>FOSE-3 | SEE CENTRAL AVENUE SUB SITE PLAN |
| CT121 | 10 | 100 | | NOTE 1 | OPGW-DDE | REUSE STATIC WIRE DE AND CONDUCTOR ON S SPAN TO SUB. |
| CT120 | 10 | 170 | | NOTE 1 | OPGW-SS | |
| CT119 | 10 | 130 | | NOTE 1 | OPGW-SS | |
| CT118 | 10 | 140 | 5 LT | NOTE 1 | OPGW-SS | |
| CT117 | 9 | 160 | | NOTE 1 | OPGW-SS | |
| CT116 | 9 | 190 | 28 LT | NOTE 1 | OPGW-DS | |
| CT115 | 9 | 190 | 10 LT | NOTE 1 | OPGW-DDE | ADD DE FOR EXIST STATIC WIRE TO SOUTH. |
| D5 | 9 | 115 | | NOTE 1 | OPGW-DDE | REUSE EXIST STATIC WIRE DEADEND TO NE. |
| D7 | 9 | 290 | | NOTE 1 | OPGW-SS | |
| D8 | 9<br>9 | 270 | | NOTE 1 | OPGW-DDE<br>FOSE-1 | REUSE 2) STATIC WIRE DEADENDS TO GOLD HILL SUB |
| GH7-1 | 9 | 120 | 80 RT | NOTE 1 | OPGW-DDE | |
| GH-3 | 9 | 180 | | NOTE 1 | OPGW-SS | |
| GH-8 | 9 | 190 | | NOTE 1 | OPGW-SS | |
| GH-9 | 9 | 170 | | NOTE 1 | OPGW-SS | |
| GH-10 | 9 | 180 | | NOTE 1 | OPGW-DDE | |
| GH-11 | 9 | 140 | | NOTE 1 | OPGW-SS | |
| GH-12 | 9 | 170 | | NOTE 1 | OPGW-SS | |
| GH-13 | 9 | 160 | | NOTE 1 | OPGW-SS | |
| C5-114 | 9 | 180 | | NOTE 1 | OPGW-EXT3<br>OPGW-DDE | REINSTALL EXISTING STATIC DEADEND TO NORTH |
| CT96E | 9 | 230 | | NOTE 1 | OPGW-SS | |
| CT96D | 9 | 200 | | NOTE 1 | OPGW-SS | |
| CT96C | 9 | 220 | 90 RT | NOTE 1 | OPGW-DDE | |
| CT96B | 9 | 180 | | NOTE 1 | OPGW-SS | |
| C5-100 | 9 | 200 | | NOTE 1 | OPGW-SS | |
| CT96A | 9 | 200 | | NOTE 1 | OPGW-SS | |
| CT96 | 9 | 200 | 25 LT | NOTE 1 | OPGW-DS | |
| CT95 | 9 | 230 | 25 RT | NOTE 1 | OPGW-DS | |
| CT94 | 9 | 190 | | NOTE 1 | OPGW-SS | |
| CT93 | 9 | 180 | | NOTE 1 | OPGW-SS | |
| CT92 | 9<br>9 | 190 | 50 RT | NOTE 1 | OPGW-DDE | |
| CT91 | 9 | 220 | | NOTE 1 | OPGW-SS | |
| CT90 | 9 | 180 | | NOTE 1 | OPGW-SS | |
| CT89 | 9 | 200 | | NOTE 1 | OPGW-SS | |
| CT88 | 9 | 150 | 20 RT | NOTE 1 | OPGW-SS | |
| CT87 | 9 | 340 | 15 RT | NOTE 1 | OPGW-SS | |
| CT86 | 9 | 200 | | NOTE 1 | OPGW-SS | |
| CT85 | 9 | 200 | | NOTE 1 | OPGW-SS | |
| CT84 | 9 | 180 | | NOTE 1 | OPGW-SS | |
| CT83 | 9 | 190 | 45 LT | NOTE 1 | OPGW-DS | |
| CT82 | 9 | 210 | 95 RT | NOTE 1 | OPGW-DDE | |
| CT81 | 9 | 150 | | NOTE 1 | OPGW-SS | |
| CT80 | 9 | 150 | 90 LT | NOTE 1 | OPGW-DDE | |
| CT79 | 9 | 200 | | NOTE 1 | OPGW-SS | |
| CT78 | 9 | 270 | | NOTE 1 | OPGW-SS | |
| CT77 | 9 | 200 | 10 RT | NOTE 1 | OPGW-SS | |
| CT76 | 9 | 220 | 15 LT | NOTE 1 | OPGW-SS | |
| CT75 | 9 | 200 | | NOTE 1 | OPGW-SS | |
| CT74 | 9 | 200 | 10 RT | NOTE 1 | OPGW-SS | |
| CT73 | 8 | 270 | | NOTE 1 | OPGW-SS | |
| CT72 | 8 | 190 | 70 RT | NOTE 1 | OPGW-DDE | |
| CT71B | 8 | 260 | | NOTE 1 | OPGW-DDE | REUSE STATIC WIRE DE AND CONDUCTOR ON E SPAN TO SUB. |
| PP1 SUB STR | 8 | 100 | | NOTE 1 | OPGW-DE<br>FOSE-3 | SEE PP1 SUB SITE PLAN. |
| TOTAL DISTANCE | | 9945 | | | | |

## POLE SCHEDULE
### PP1 SUBSTATION TO TAURMAN AVE SUBSTATION

| POLE | MAP NO. | SPAN (FT) | LINE ANGLE | REMOVE | PROVIDE | COMMENTS |
|---|---|---|---|---|---|---|
| PP1 SUB STR | 8 | | | NOTE 1 | OPGW-DE<br>FOSE-3 | SEE PP1 SUB SITE PLAN |
| CT71A | 8 | 100 | | NOTE 1 | OPGW-DDE | REUSE STATIC WIRE DE AND CONDUCTOR ON W SPAN TO SUB. |
| CT70 | 8 | 250 | 110 RT | NOTE 1 | OPGW-DDE | |
| CT69 | 8 | 50 | | NOTE 1 | OPGW-SS | |
| CT68 | 8 | 280 | 5 LT | NOTE 1 | OPGW-SS | |
| CT67 | 8 | 180 | | NOTE 1 | OPGW-SS | |
| CT66 | 8 | 230 | | NOTE 1 | OPGW-SS | |
| CT65 | 8 | 170 | | NOTE 1 | OPGW-SS | |
| CT64 | 8 | 150 | | NOTE 1 | OPGW-SS | |
| CT63 | 8 | 150 | | NOTE 1 | OPGW-SS | |
| CT62 | 8 | 190 | | NOTE 1 | OPGW-SS | |
| CT61 | 8 | 160 | 10 LT | NOTE 1 | OPGW-SS | |
| CT60 | 8 | 170 | 30 RT | NOTE 1 | OPGW-DS | |
| CT59 | 8 | 160 | | NOTE 1 | OPGW-SS | |
| CT58 | 8 | 200 | 20 LT | NOTE 1 | OPGW-SS | |
| CT57 | 8 | 200 | 50 LT | NOTE 1 | OPGW-DDE | |
| CT56 | 8 | 150 | | NOTE 1 | OPGW-DDE | REUSE STATIC WIRE DE AND CONDUCTOR ON S SPAN TO SUB. |
| TA SUB STR | 8 | 170 | | NOTE 1 | OPGW-DE<br>FOSE-3 | SEE TAURMAN AVE SUB SITE PLAN. |
| TOTAL DISTANCE | | 2960 | | | | |

NOTES:

1. REMOVE 5/16" EHS STATIC WIRE AND ATTACHMENT HARDWARE.
2. SPAN LENGTHS AND LINE ANGLES ARE APPROXIMATE. PROVIDE MEASURED LENGTHS AND ANGLES WITH RECORD DRAWINGS. DO NOT EXCEED 30° ANGLE FOR OPGW-SS ASSEMBLY. DO NOT EXCEED 60° ANGLE FOR OPGW-DS ASSEMBLY.
3. USED REDUCED TENSION FOR SUBSTATION STRUCTURE PULL-OFFS.
4. OPGW-SS, X10-AB, ETC. ARE POLE DETAIL DESIGNATION SYMBOLS. REFER TO DRAWINGS E-47, E-48 AND E-49 FOR AN EXPLANATION OF THE USE AND DESCRIPTION OF EQUIPMENT PROVIDED BY THESE SYMBOLS.
5. PROVIDE GUYS AND ANCHORS AS REQUIRED TO MEET GRADE B GUYING. REFER TO DRAWING E-46 FOR GRADE B GUY LEAD SCHEDULE AND ESTIMATED QUANTITY OF GUYS AND ANCHORS TO BE PROVIDED IN ADDITION TO QUANTITIES SHOWN ON POLE SCHEDULES.

APPR | DATE | DESCRIPTION | SYM

Stanley Consultants INC.

SEAL

APPROVED

ACTIVITY - SATISFACTORY TO

DATE

APPROVED

FOR EFD FOR COMMANDER NAVFAC

DATE

| A/E | EFD |
|---|---|
| MLG | DESIGN |
| RJH | DRAWN |
| MGS | REVIEW |
| MLG | QC |
| | CHIEF ARCH./ ENGR. |

PROJECT MANAGER

FIRE PROTECTION

BRANCH MANAGER

DESIGN DIRECTOR

DEPARTMENT OF THE NAVY
NAVAL STATION
NAVAL FACILITIES ENGINEERING COMMAND
ATLANTIC DIVISION
NORFOLK, VIRGINIA
U.S. NAVAL STATION
GUANTANAMO BAY, CUBA

# 34.5 KV LINE DIFFERENTIAL SYSTEM

POLE SCHEDULES - SHEET 3

CODE ID. NO. 80091 | SIZE D

SCALE: NONE

EFD NO.

STA. PROJ. NO. R6-95R1

SPEC. NO.

CONSTR. CONTR. NO.
N62470-99-C-9147

NAVFAC DRAWING NO.
4501412

SHEET 45 OF 51

E-44

DRAWFORM REVISION SEPT 2001

REV DATE

| POLE SCHEDULE<br>CENTRAL AVENUE SUBSTATION TO PP4 SUBSTATION | | | | | | |
|---|---|---|---|---|---|---|
| POLE | MAP NO. | SPAN (FT) | LINE ANGLE | REMOVE | PROVIDE | COMMENTS |
| CA SUB STR | 10 | | | NOTE 1 | OPGW-DE<br>FOSE-3 | SEE CA SUB SITE PLAN |
| A51A & B | 10 | 100 | | NOTE 1 | OPGW-DDE | REUSE STATIC WIRE DE AND CONDUCTOR ON N SPAN TO SUB. |
| A50 | 9 | 270 | | NOTE 1 | OPGW-SS | |
| A49 | 9 | 300 | | NOTE 1 | OPGW-SS | |
| A48 | 9 | 300 | | NOTE 1 | OPGW-SS | |
| A47 | 9 | 282 | | NOTE 1 | OPGW-SS | |
| A46 | 9 | 300 | | NOTE 1 | OPGW-SS | |
| A45 | 9 | 280 | 45 LT | NOTE 1 | OPGW-DDE | |
| A44 | 9 | 190 | | NOTE 1 | OPGW-SS | |
| A43 | 9 | 380 | | NOTE 1 | OPGW-SS | |
| A42 | 9 | 350 | | NOTE 1 | OPGW-SS | |
| A41 | 9 | 250 | | NOTE 1 | OPGW-SS | |
| A40 | 9 | 270 | | NOTE 1 | OPGW-SS | |
| A39 | 9 | 300 | | NOTE 1 | OPGW-SS | |
| A38 | 9 | 300 | | NOTE 1 | OPGW-SS | |
| A37 | 9 | 270 | 20 RT | NOTE 1 | OPGW-SS | |
| A36 | 9 | 250 | 30 RT | NOTE 1 | OPGW-DS | |
| A35 | 9 | 310 | | NOTE 1 | OPGW-SS | |
| A34 | 9 | 300 | | NOTE 1 | OPGW-SS | |
| A33 | 9 | 290 | | NOTE 1 | OPGW-SS | |
| A32 | 9 | 300 | | NOTE 1 | OPGW-SS | |
| A31 | 9 | 250 | | NOTE 1 | OPGW-SS | |
| A30 | 9 | 210 | | NOTE 1 | OPGW-SS | |
| A29 | 9 | 240 | | NOTE 1 | OPGW-SS | |
| A28 | 9 | 230 | 90 RT | NOTE 1 | OPGW-DDE | |
| A27A | 9 | 180 | 25 LT | NOTE 1 | OPGW-DS | |
| A27 | 9 | 190 | 15 RT | NOTE 1 | OPGW-DS | |
| A26 | 9 | 200 | | NOTE 1 | OPGW-SS | |
| A25 | 8 | 210 | 80 LT | NOTE 1 | OPGW-DDE | |
| A24 | 8 | 310 | 13 LT | NOTE 1 | OPGW-SS | |
| A23 | 8 | 250 | | NOTE 1 | OPGW-SS | |
| A22 | 8 | 290 | 35RT | NOTE 1 | OPGW-SS | |
| A21 | 8 | 180 | | NOTE 1 | OPGW-SS | |
| A20 | 8 | 280 | 50 LT | NOTE 1 | OPGW-DDE | |
| A19 | 8 | 290 | 45 RT | NOTE 1 | OPGW-DS | |
| A18 | 8 | 170 | | NOTE 1 | OPGW-SS | |
| A17 | 8 | 250 | | NOTE 1 | OPGW-SS | |
| A16 | 8 | 240 | 35 RT | NOTE 1 | OPGW-DS | |
| A15 | 8 | 250 | | NOTE 1 | OPGW-SS | |
| A14 | 8 | 240 | | NOTE 1 | OPGW-SS | |
| A12 | 8 | 210 | 30 LT | NOTE 1 | OPGW-DS | |
| A10 | 8 | 310 | 80 RT | NOTE 1 | OPGW-DDE | |
| A9 | 8 | 340 | 5 RT | NOTE 1 | OPGW-SS | |
| A8 | 8 | 250 | | NOTE 1 | OPGW-SS | |
| A7 | 8 | 210 | | NOTE 1 | OPGW-SS | |
| A6 | 8 | 200 | 15 RT | NOTE 1 | OPGW-SS | |
| A5 | 8 | 270 | | NOTE 1 | OPGW-SS | |
| A4 | 8 | 300 | 6 RT | NOTE 1 | OPGW-SS | |
| A3 | 8 | 210 | | NOTE 1 | OPGW-SS | |
| A2 | 8 | 190 | 10 RT | NOTE 1 | OPGW-SS | |
| A1 EAST<br>A1 CENTER<br>A1 WEST | 8<br>8<br>8 | 110 | 10 RT | NOTE 1<br>NOTE1<br>NOTE 1 | OPGW-DDE<br>OPGW-SS<br>OPGW-DDE | REUSE STATIC WIRE DE AND WIRE ON E SPAN TO SUB<br>OPGW TO CROSS FROM E POLE TO W POLE. |
| PP4 SUB STR | 8 | 150 | | NOTE 1 | OPGW-DDE<br>OPGW-DE<br>FOSE-3 | SEE PP4 SUB SITE PLAN |
| TOTAL DISTANCE | | 12802 | | | | |

| POLE SCHEDULE<br>TAURMAN AVENUE SUBSTATION TO PP4 SUBSTATION | | | | | | |
|---|---|---|---|---|---|---|
| POLE | MAP NO. | SPAN (FT) | LINE ANGLE | REMOVE | PROVIDE | COMMENTS |
| TA SUB STR | 8 | | | NOTE 1 | OPGW-DE<br>FOSE-3 | SEE TAURMAN AVE SUB SITE PLAN |
| B13 | 8 | 170 | 90 LT | NOTE 1 | OPGW-DDE | REUSE STATIC WIRE DE AND CONDUCTOR ON N SPAN TO SUB. |
| B12 | 8 | 260 | 20 LT | NOTE 1 | OPGW-SS | |
| B11 | 8 | 180 | | NOTE 1 | OPGW-SS | |
| B10 | 8 | 180 | 15 RT | NOTE 1<br>STATIC EXT BRKT | OPGW-EXT2<br>OPGW-SS | |
| B9 | 8 | 450 | | NOTE 1 | OPGW-SS | |
| B8 | 8 | 200 | | NOTE 1 | OPGW-SS | |
| B7 | 8 | 410 | | NOTE 1 | OPGW-SS | |
| B6 | 8 | 170 | 32 RT | NOTE 1 | OPGW-DS | |
| B5 | 8 | 180 | | NOTE 1 | OPGW-SS | |
| B4 | 8 | 210 | | NOTE 1 | OPGW-SS | |
| B3 | 8 | 180 | | NOTE 1 | OPGW-SS | |
| B2 | 8 | 200 | 6 LT | NOTE 1 | OPGW-SS | |
| B1 | 8 | 130 | 30 RT | NOTE 1 | OPGW-DDE | REUSE STATIC WIRE DE AND CONDUCTOR ON W SPAN TO SUB. |
| PP4 SUB STR | | 150 | | NOTE 1 | OPGW-DE<br>FOSE-3 | SEE PP4 SUB SITE PLAN |
| TOTAL DISTANCE | | 3070 | | | | |

NOTES:

1. REMOVE 5/16" EHS STATIC WIRE AND ATTACHMENT HARDWARE.
2. SPAN LENGTHS AND LINE ANGLES ARE APPROXIMATE. PROVIDE MEASURED LENGTHS AND ANGLES WITH RECORD DRAWINGS. DO NOT EXCEED 30° ANGLE FOR OPGW-SS ASSEMBLY. DO NOT EXCEED 60° ANGLE FOR OPGW-DS ASSEMBLY.
3. USED REDUCED TENSION FOR SUBSTATION STRUCTURE PULL-OFFS.
4. OPGW-SS, X10-AB, ETC. ARE POLE DETAIL DESIGNATION SYMBOLS. REFER TO DRAWINGS E-47, E-48 AND E-49 FOR AN EXPLANATION OF THE USE AND DESCRIPTION OF EQUIPMENT PROVIDED BY THESE SYMBOLS.
5. PROVIDE GUYS AND ANCHORS AS REQUIRED TO MEET GRADE B GUYING. REFER TO DRAWING E-46 FOR GRADE B GUY LEAD SCHEDULE AND ESTIMATED QUANTITY OF GUYS AND ANCHORS TO BE PROVIDED IN addition TO QUANTITIES SHOWN ON POLE SCHEDULES.

APPR | DATE | DESCRIPTION | SYM

Stanley Consultants INC.

SEAL

APPROVED

ACTIVITY – SATISFACTORY TO

DATE

APPROVED

FOR EFD FOR COMMANDER NAVFAC

DATE

| A/E | | EFD |
|---|---|---|
| MLG | DESIGN | |
| RJH | DRAWN | |
| MGS | REVIEW | |
| MLG | QC | |
| | CHIEF ARCH./ ENGR. | |

PROJECT MANAGER

FIRE PROTECTION

BRANCH MANAGER

DESIGN DIRECTOR

DEPARTMENT OF THE NAVY
NAVAL FACILITIES ENGINEERING COMMAND
NAVAL STATION NORFOLK, VIRGINIA
ATLANTIC DIVISION
U.S. NAVAL STATION GUANTANAMO BAY, CUBA

# 34.5 KV LINE DIFFERENTIAL SYSTEM

POLE SCHEDULES – SHEET 4

CODE ID. NO. 80091 | SIZE D

SCALE: NONE

EFD NO.

STA. PROJ. NO. R6-95R1

SPEC. NO.

CONSTR. CONTR. NO.
N62470-99-C-9147

NAVFAC DRAWING NO.
4501413

SHEET 46 OF 51

E-45

DRAWFORM REVISION SEPT 2001

REV/DATE

## GUY LEAD SCHEDULE

| | 1-7/16 HS WITH 1-12M ANCHOR | | | | | | 2-7/16 HS WITH 2-12M ANCHOR | | | | | | 3-7/16 HS WITH 3-12M ANCHOR | | | | | | 4-7/16 HS WITH 4-12M ANCHOR | | | | | | | STUB POLE LEADS | | | | | | | | |
|---|---|---|---|---|---|---|---|---|---|---|---|---|---|---|---|---|---|---|---|---|---|---|---|---|---|---|---|---|---|---|---|---|---|
| | 45 FT POLE | | 50 FT POLE | | 55 FT POLE | | 45 FT POLE | | 50 FT POLE | | 55 FT POLE | | 45 FT POLE | | 50 FT POLE | | 55 FT POLE | | 45 FT POLE | | 50 FT POLE | | 55 FT | | | 1-7/16 HS | | | 2-7/16 HS | | | 3-7/16 HS | | |
| | HOR | VER | HOR | VER | HOR | VER | HOR | VER | HOR | VER | HOR | VER | HOR | VER | HOR | VER | HOR | VER | HOR | VER | HOR | VER | HOR | | | 1-12M ANCHOR | | | 2-12M ANCHOR | | | 3-12M ANCHOR | | |
| | | | | | | | | | | | | | | | | | | | | | | | | | | 30 FT | 35 FT | 40 FT | 30 FT | 35 FT | 40 FT | 30 FT | 35 FT | 40 FT |
| 1:1 LEAD | 33.5 | 33.5 | 38.0 | 38.0 | 42.5 | 42.5 | 36.0 | 31.0 | 40.5 | 35.5 | 45.0 | 40.0 | 35.0 | 33.0 | 39.5 | 37.5 | 44.0 | 42.0 | 34.0 | 34.5 | 38.5 | 39.0 | 43.0 | 1:1 LEAD | | 24.5 | 29.0 | 34.0 | 24.5 | 29.0 | 34.0 | 24.5 | 29.0 | 34.0 |
| ANGLE | | | | | | | | | | | | | | | | | | | | | | | | ANGLE | | | | | | | | | | |
| 1 | 5.5 | 5.0 | 6.0 | 5.5 | 7.0 | 6.5 | | | 3.5 | | 4.0 | 3.5 | | | | | | | | | | | | 1 | | 4.0 | 4.5 | 5.5 | | | | | | |
| 3 | 6.5 | 6.0 | 7.5 | 7.0 | 8.5 | 8.0 | 3.5 | 3.5 | 4.0 | 4.0 | 4.5 | 4.5 | | | | | 3.5 | | | | | | | 3 | | 5.0 | 6.0 | 7.0 | | | 3.5 | | | |
| 5 | 8.0 | 7.0 | 9.0 | 8.5 | 10.5 | 9.5 | 4.5 | 4.0 | 5.0 | 4.5 | 5.5 | 5.0 | | | 3.5 | | 4.0 | 3.5 | | | | | | 5 | | 6.0 | 7.0 | 8.0 | | 3.5 | 4.0 | | | |
| 10 | 11.5 | 10.0 | 13.0 | 11.5 | 14.5 | 13.5 | 6.0 | 5.5 | 6.5 | 6.0 | 7.5 | 7.0 | 4.0 | 4.0 | 4.5 | 4.5 | 5.0 | 5.0 | 3.5 | | 3.5 | 3.5 | 4.0 | 10 | | 8.5 | 10.0 | 11.5 | 4.0 | 5.0 | 5.5 | | 3.5 | 4.0 |
| 15 | 15.0 | 13.5 | 17.5 | 15.5 | 19.5 | 17.5 | 7.5 | 6.5 | 8.5 | 7.5 | 9.5 | 8.5 | 5.0 | 4.5 | 6.0 | 5.5 | 6.5 | 6.0 | 4.0 | 3.5 | 4.5 | 4.0 | 5.0 | 15 | | 11.0 | 13.0 | 15.5 | 5.5 | 6.0 | 7.0 | 4.0 | 4.5 | 5.0 |
| 20 | 19.5 | 16.5 | 22.0 | 19.5 | 25.0 | 22.0 | 9.0 | 8.0 | 10.5 | 9.5 | 11.5 | 10.5 | 6.0 | 5.5 | 7.0 | 6.5 | 8.0 | 7.0 | 5.0 | 4.5 | 5.5 | 5.0 | 6.0 | 20 | | 14.0 | 17.0 | 19.5 | 6.5 | 7.5 | 8.5 | 4.5 | 5.5 | 6.0 |
| 25 | 24.5 | 20.5 | 28.0 | 24.0 | 31.0 | 27.0 | 11.0 | 9.5 | 12.0 | 11.0 | 13.5 | 12.5 | 7.5 | 6.5 | 8.0 | 7.5 | 9.0 | 8.5 | 5.5 | 5.0 | 6.5 | 5.5 | 7.0 | 25 | | 18.0 | 21.0 | 24.5 | 7.5 | 9.0 | 10.0 | 5.5 | 6.0 | 7.0 |
| 30 | 31.0 | 25.0 | 35.0 | 29.0 | 39.5 | 33.0 | 12.5 | 11.0 | 14.0 | 12.5 | 15.5 | 14.5 | 8.5 | 7.5 | 9.5 | 8.5 | 10.5 | 9.5 | 6.5 | 5.5 | 7.0 | 6.5 | 8.0 | 30 | | 22.5 | 26.5 | 31.0 | 8.5 | 10.0 | 12.0 | 6.0 | 7.0 | 8.0 |
| 35 | | 30.5 | | 35.5 | | 41.0 | 14.0 | 12.5 | 16.0 | 14.5 | 18.0 | 16.5 | 9.5 | 8.5 | 10.5 | 9.5 | 12.0 | 10.5 | 7.0 | 6.5 | 8.0 | 7.0 | 9.0 | 35 | | | | | 10.0 | 11.5 | 13.5 | 6.5 | 8.0 | 9.0 |
| 40 | | | | | | | 18.0 | 14.0 | 18.0 | 16.5 | 20.5 | 18.5 | 10.5 | 9.0 | 12.0 | 10.5 | 13.0 | 12.0 | 8.0 | 7.0 | 9.0 | 8.0 | 10.0 | 40 | | | | | 11.0 | 13.0 | 15.0 | 7.5 | 9.0 | 10.0 |
| 45 | | | | | | | 18.0 | 16.0 | 20.5 | 18.0 | 22.5 | 20.5 | 11.5 | 10.0 | 13.0 | 11.5 | 14.5 | 13.0 | 8.5 | 7.5 | 10.0 | 8.5 | 11.0 | 45 | | | | | 12.5 | 14.5 | 17.0 | 8.0 | 9.5 | 11.0 |
| 50 | | | | | | | 20.0 | 17.5 | 22.5 | 20.5 | 25.0 | 23.0 | 12.5 | 11.0 | 14.5 | 12.5 | 16.0 | 14.5 | 9.5 | 8.5 | 10.5 | 9.5 | 12.0 | 50 | | | | | 13.5 | 16.0 | 19.0 | 9.0 | 10.5 | 12.5 |

### CONDUCTOR SAG SCHEDULE

| LOADING DISTRICT: LIGHT | | | | | | |
|---|---|---|---|---|---|---|
| RULING SPAN: 200 THRU 350 FT | | | | | | |
| SPAN | TEMP | | | | | |
| LENGTH | (DEG F) | 70 | 75 | 80 | 85 | 90 |
| (FT) | | | | | | |
| 200 | SAG (FT) | 2.63 | 2.7 | 2.78 | 2.83 | 2.89 |
| 210 | SAG (FT) | 2.9 | 2.98 | 3.05 | 3.12 | 3.19 |
| 220 | SAG (FT) | 3.19 | 3.27 | 3.34 | 3.42 | 3.5 |
| 230 | SAG (FT) | 3.48 | 3.57 | 3.66 | 3.74 | 3.82 |
| 240 | SAG (FT) | 3.79 | 3.89 | 3.98 | 4.07 | 4.16 |
| 250 | SAG (FT) | 4.12 | 4.22 | 4.32 | 4.42 | 4.52 |
| 260 | SAG (FT) | 4.45 | 4.56 | 4.67 | 4.78 | 4.89 |
| 270 | SAG (FT) | 4.8 | 4.92 | 5.04 | 5.16 | 5.27 |
| 280 | SAG (FT) | 5.16 | 5.29 | 5.42 | 5.54 | 5.67 |
| 290 | SAG (FT) | 5.54 | 5.68 | 5.81 | 5.95 | 6.08 |
| 300 | SAG (FT) | 5.93 | 6.07 | 6.22 | 6.37 | 6.51 |
| 310 | SAG (FT) | 6.33 | 6.49 | 6.64 | 6.8 | 6.95 |
| 320 | SAG (FT) | 6.75 | 6.91 | 7.08 | 7.24 | 7.41 |
| 330 | SAG (FT) | 7.17 | 7.35 | 7.53 | 7.7 | 7.88 |
| 340 | SAG (FT) | 7.62 | 7.8 | 7.99 | 8.18 | 8.36 |
| 350 | SAG (FT) | 8.07 | 8.27 | 8.47 | 8.67 | 8.86 |

CONDUCTOR SAG NOTES:

1. USE THIS SCHEDULE FOR SAGGING 3/0 OR 4/0 CU PRESTRETCHED CONDUCTOR TO MATCH EXISTING FINAL SAGS.

GUYING NOTES:

1. USE THIS SCHEDULE FOR GRADE B GUYING REQUIREMENTS FOR NEW OPGW AND EXISTING 3/0 OR 4/0 CU 34.5 KV PHASE CONDUCTORS.
   SCHEDULE BASED ON LIGHT LOADING DISTRICT MAXIMUM DESIGN TENSIONS AS FOLLOWS:
   a. OPGW: 1500 LBS
   b. PHASE: 2000 LBS
2. GUYING FOR UNDERBUILD DISTRIBUTION OR COMMUNICATION CIRCUITS SHALL BE CONSIDERED SEPARATELY FROM ABOVE GUY LEAD SCHEDULE.
3. LEADS LISTED ARE THE AVERAGE GUY LEADS IN FT.
4. RECOMMENDED MINIMUM LEAD TO CLOSEST ANCHOR IS 5 FT
5. THREE PHASE VERTICAL STRUCTURES REQUIRES A MINIMUM OF 2 GUYS. BOTH GUYS MAY BE ATTACHED TO ONE ANCHOR WHEN TABLE INDICATES 1 GUY/ANCHOR IS ADEQUATE.
6. FOR QUANTITY OF O.H. GUYS TO STUB POLE, USE MINIMUM NUMBER OF DOWN GUYS REQURIED FOR THE SAME LINE ANGLE.
7. HOR DESIGNATES HORIZONTAL CROSSARM CONSTRUCTION.
   VER DESIGNATES VERTICAL PHASE OVER PHASE CONSTRUCTION.
8. ANGLE DESIGNATES LINE ANGLE IN DEGREES.
9. PROVIDE GUYS AND ANCHORS FOR TRANSMISSION, OPGW, DISTRIBUTION, AND COMMUNINICATION CIRCUITS AS REQUIRED TO MEET GRADE B GUYING. FOR BIDDING PURPOSES ASSUME 40 GUYS AND ANCHORS WILL BE PROVIDED IN ADDITION TO QUANTITIES SHOWN ON DRAWINGS E-42 THRU E-45.

APPR | DATE | DESCRIPTION | SYM

Stanley Consultants INC.

SEAL

APPROVED

ACTIVITY – SATISFACTORY TO

DATE

APPROVED

FOR EFD FOR COMMANDER NAVFAC

DATE

| A/E | EFD |
|---|---|
| MLG | DESIGN |
| RJH | DRAWN |
| DPJ | REVIEW |
| MLG | QC |

CHIEF ARCH./ ENGR.

PROJECT MANAGER

FIRE PROTECTION

BRANCH MANAGER

DESIGN DIRECTOR

DEPARTMENT OF THE NAVY
NAVAL FACILITIES ENGINEERING COMMAND
ATLANTIC DIVISION
NORFOLK, VIRGINIA
NAVAL STATION
U.S. NAVAL STATION
GUANTANAMO BAY, CUBA

# 34.5 KV LINE DIFFERENTIAL SYSTEM

CONDUCTOR SAG AND GUY LEAD SCHEDULES

CODE ID. NO. 80091 | SIZE D

SCALE: NONE

EFD NO.

STA. PROJ. NO. R6-95R1

SPEC. NO.

CONSTR. CONTR. NO. N62470-99-C-9147

NAVFAC DRAWING NO. 4501414

SHEET 47 OF 51

E-46

DRAWFORM REVISION SEPT 2001

REV/DATE

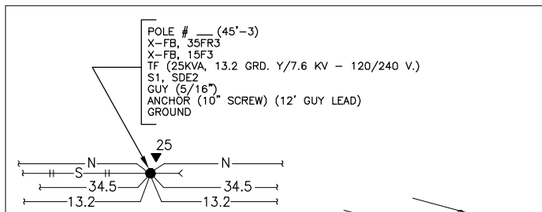


PLAN VIEW

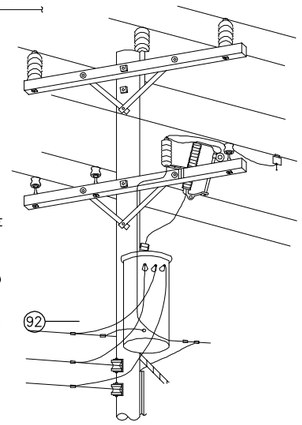


NOTES

1. THE SYMBOLS LISTED ABOVE INCLUDE MATERIALS (DESCRIBED BY OVERHEAD SKETCHES) WHICH ARE GRAPHICALLY ILLUSTRATED BY THIS PICTURE. SEE SKETCH OH-1.3A FOR EXPLANATORY NOTES.
2. EACH SKETCH CONTAINS MATERIAL ITEMS WHICH COMPRISE A PART OF EACH INDIVIDUAL SYMBOL REFERENCED BY THAT SKETCH. THESE ITEMS ARE INDICATED BY CIRCLED NUMERALS WHICH ARE IDENTIFIED BY SKETCHES OH-1.5 AND OH-1.5A.
3. SPACING REQUIREMENTS RELATED TO INDIVIDUAL COMPONENTS OF A SYMBOL ARE INDICATED ON THE APPROPRIATE SKETCH. VERTICAL SPACING REQUIREMENTS BETWEEN CIRCUITS AND/OR SYSTEMS ARE INDICATED ON SKETCH OH-1.4. ALL OTHER SEPARATIONS BETWEEN CIRCUITS, EQUIPMENT, ETC., SHALL CONFORM TO THE NATIONAL ELECTRICAL SAFETY CODE, IEEE C2.

METHOD OF SHOWING SYMBOLS

SKETCH DATE JUNE 2002 | STYLE OH-1.3

## EXPLANATORY NOTES - METHOD OF SHOWING SYMBOLS

1. SYMBOLS ARE SHOWN IN THE BASIC ORDER AS THEY APPEAR ON THE POLE, BY STARTING AT THE TOP AND WORKING DOWN.
2. NUMERALS PRECEDING THE SYMBOL INDICATE THE MINIMUM REQUIRED VOLTAGE (KV) RATING (5,15,35) OF THE ASSEMBLY, IF APPLICABLE.
3. NUMERAL FOLLOWING THE SYMBOL INDICATES THE NUMBER OF CONDUCTORS ASSOCIATED WITH THE ASSEMBLY, IF APPLICABLE.
4. NUMERAL IN PARENTHESIS FOLLOWING THE SYMBOL DENOTES THE NUMBER OF ASSEMBLIES REQUIRED, IF MORE THAN ONE.
5. DATA IN PARENTHESIS FOLLOWING THE SYMBOL PROVIDES INFORMATION RELATIVE TO THE SYMBOL.

## EXPLANATION OF SYMBOLS LISTED FOR POLE ON SKETCH OH-1.3

PROVIDE 45 FOOT LONG, CLASS 3 POLE CONTAINING:

- X-FB - 8' CROSSARM WITH FLAT BRACE
- 35FR3 - 35KV INSULATORS, FLAT (MOUNTED HORIZONTAL ON CROSS-ARM), RIDGE PIN (CENTER PHASE ON POLE TOP PIN), THREE CONDUCTORS
- X-FB - 8' CROSSARM WITH FLAT BRACE
- 15F3 - 15KV INSULATORS, FLAT (MOUNTED HORIZONTAL ON CROSSARM), THREE CONDUCTORS. NOTE: THIS SYMBOL CALLS FOR THREE CROSSARM MOUNTED PINS IN LIEU OF RIDGE PIN ON CENTER PHASE.
- TF - TRANSFORMER ON FLAT (HORIZONTAL) CONSTRUCTION. DATA IN PARENTHESIS DESCRIBES THE TRANSFORMER CHARACTERISTICS.
- S1 - SECONDARY, ONE CONDUCTOR, TANGENT CONSTRUCTION (COMMON NEUTRAL).
- SDE2 - SECONDARY DEADEND, TWO CONDUCTORS, OPEN WIRE
- GUY (5/16") - DOWN GUY - WIRE SIZE 5/16"
- ANCHOR (10" SCREW) - 10" SCREW TYPE ANCHOR WITH 12 FT. GUY LEAD. NOTE: NO PLATE IS INCLUDED FOR THE ANCHOR SYMBOL.
- GROUND - NO EXPLANATION NECESSARY

EXPLANATION OF NOTES/SYMBOLS

SKETCH DATE JUNE 2002 | STYLE OH-1.3A

## POLE LINE MATERIAL LIST

1. FLAT STEEL BRACE (TWO PIECES)
2. MACHINE BOLT, 3/8" X LENGTH NEEDED WITH WASHER, NUT AND LOCKWASHER
3. 8' WOOD CROSSARM WITH CROSS SECTION DIMENSIONS OF 3 1/2" X 4 1/2"
4. MACHINE BOLT, 5/8" X LENGTH NEEDED WITH WASHER, NUT AND LOCKWASHER
5. TIMBER CONNECTOR
6. LAGSCREW, 1/2" X 4"
7. ANGLE STEEL BRACE (TWO PIECES)
8. MACHINE BOLT, 1/2" X LENGTH NEEDED, WITH WASHER, NUT & LOCKWASHER
9. DEADEND BOX
10. STEEL PIN
11. PIN INSULATOR
12. GRID GAIN, USED ONLY WHEN THERE IS NO POLE GAIN
13. ANGLE STEEL BRACE (ONE PIECE)
14. 10' WOOD CROSSARM WITH CROSS SECTION DIMENSIONS OF 3 1/2" X 4 1/2"
15. 5/8" EYE NUT
16. 5/8" EYE BOLT, LENGTH AS NEEDED, WITH WASHER, NUT & LOCKWASHER
17. EXTENSION LINK
18. BELL TYPE SUSPENSION INSULATOR WITH CONNECTING HARDWARE
19. STRAIN CLAMP
20. STEEL ANGLE PIN
21. CLUSTER MOUNTING BRACKET, STEEL
22. TRANSFORMER GROUNDING CONNECTION
23. STIRRUP
24. SECONDARY LEAD SUPPORT BRACKET
25. ADAPTER PLATE FOR CLUSTER MOUNTING
26. CLEVIS BRACKET FOR SPOOL INSULATOR
27. SPOOL INSULATOR
28. U BOLT CLAMP
29. PREFORMED GUY GRIP
30. GUY HOOK
31. GUY STRAIN INSULATOR
32. GUY WIRE, SIZE AS SPECIFIED
33. #4 WP CU, SOFT DRAWN GROUND WIRE
34. GROUND CLAMP
35. CONDUIT COUPLING
36. CONDUIT BEND
37. INSULATED BUSHING
38. PERFORATED STRAPPING, 1-1/2" WIDE
39. HOT LINE CLAMP
40. FUSED CUTOUT, AS SPECIFIED
41. SURGE ARRESTER, AS SPECIFIED
42. POLE TOP PIN (RIDGE PIN)-24 INCHES LONG
43. CROSSARM ANGLE PIN
44. ANGLE POLE TOP PIN
45. WEATHERPROOF SOFT DRAWN WIRE-SIZE
    (a) TO MATCH OR EXCEED AMPACITY OF CONNECTING CABLE, OR
    (b) AT 125% OF TRANSFORMER FULL LOAD CURRENT, BUT NOT LESS THAN NO. 4 AWG

POLE LINE MATERIAL LIST

SKETCH DATE JUNE 2002 | STYLE OH-1.5

## POLE LINE MATERIAL LIST

46. TRI-MOUNT BRACKET
47. TERMINATOR
48. MOUNTING BRACKET
49. CABLE GRIP HANGER
50. HOSE CLAMP
51. STUD, 3/4" X 1-3/4"
52. LINE POST INSULATOR
53. TRIPLE INSULATOR BRACKET
54. ANGLE CLAMP
55. INSULATOR, LINE POST CLAMP
56. 4' CROSSARM
57. CROSSARM GAIN BRACKET
58. PULLEY BRACKET
59. WEDGE CLAMP
60. MIDSPAN SERVICE CLAMP
61. STUD, 7"
62. SADDLE, ANGLE
63. SADDLE CROSSARM
64. FITTING, POLE TOP
65. CONNECTOR
66. SUSPENSION CLAMP
67. TIE, SERVICE CABLE
68. 54" FIBERGLASS STRAIN INSULATOR
69. PVC RISER SHIELD
70. PVC EXTENSION SHIELD
71. PVC BACK PLATE
72. 8' WOOD CROSSARM WITH CROSS SECTION DIMENSIONS OF 4 3/4" X 5 3/4"
73. 10' WOOD CROSSARM WITH CROSS SECTION DIMENSIONS OF 4 3/4" X 5 3/4"
74. BACK-UP CURRENT LIMITING FUSE

POLE LINE MATERIAL LIST

SKETCH DATE JUNE 2002 | STYLE OH-1.5A

## POLE LINE MATERIAL LIST

75. SHIELD WIRE SUPPORT BRACKET
76. THIMBLE CLEVIS
77. EXTENSION LINK
78. OPGW DEADEND, FORMED WIRE TYPE, WITH GROUND ASSEMBLY AND REINFORCING RODS
79. SHOULDER EYEBOLT, 5/8" LENGTH AS NEEDED, WITH 4"X4"X1/4" CURVED WASHER, NUT, AND LOCKWASHER
80. SINGLE SUSPENSION CLAMP WITH REINFORCING RODS AND GROUNDING LUG
81. DOUBLE SUSPENSION CLAMP WITH REINFORCING RODS, GROUNDING LUGS AND YOKE PLATE.
82. ANCHOR SHACKLE
83. 4 AWG CU, STRANDED
84. TERMINAL, 4 CU TO 1/2" BOLT
85. BOLT, 1/2"-13X1-1/2", GALVANIZED, WITH HEX NUT AND LOCKWASHER
86. CLEVIS-EYE CONNECTOR
87. POLE TOP EXTENSION, BAYONET TYPE WITH GOOSENECK SHIELD WIRE ATTACHMENT
88. POLE TOP EXTENSION, 30° MAXIMUM ANGLE
89. POLE TOP EXTENSION, POLE SPLINT TYPE, WITH MOUNTING STRAPS AND BRACKETS
90. EYELET, FOR 5/8" BOLT
91. MACHINE BOLT, 3/4"X LENGTH AS NEEDED WITH WASHER, NUT AND LOCKWASHER
92. WASHER, CURVED, 4"X4"X1/4"
93. OPGW DOWNLEAD GUIDE CLAMP, GALVANIZED, WITH MOUNTING HARDWARE
94. OPGW COIL STORAGE BRACKET, GALVANIZED, WITH MOUNTING HARDWARE AND OPGW DOWNLEAD GUIDE CLAMPS
95. SPLICE ENCLOSURE, GALVANIZED, WITH MOUNTING HARDWARE AND OPGW CONNECTOR KITS
96. FIBER OPTICAL GROUND WIRE (OPGW), LENGTH AS NEEDED, SIZE AS INDICATED ON DRAWINGS

POLE LINE MATERIAL LIST

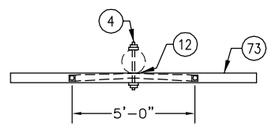


PLAN VIEW

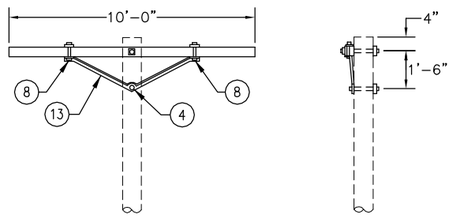


ELEVATIONS

X10-AB

SKETCH DATE JUNE 2002 | STYLE OH-7

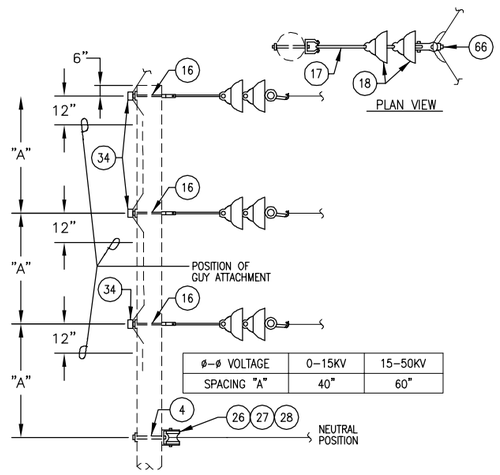


| ø-ø VOLTAGE | 0-15KV | 15-50KV |
|---|---|---|
| SPACING "A" | 40" | 60" |

NOTES

ELEVATION

1. DRAWING REPRESENTS VA3-N. MODIFY INSULATOR ASSEMBLIES AS REQUIRED TO COINCIDE WITH THE NUMBER OF PHASE CONDUCTORS.
2. OMIT ITEMS (4) (26) (27) AND (28) FOR NEUTRAL ON ALL SYMBOLS WHICH DO NOT CONTAIN "N".
3. DRAWING REPRESENTS ASSEMBLY FOR CIRCUIT VOLTAGES >5KV AND ≤15KV. REFER TO SPECIFICATION SECTION 16301 FOR THE REQUIRED NUMBER AND CLASS OF INSULATORS.

VA3-N, VA3, VA2-N, VA2, VA1-N, VA1
(0-50KV)

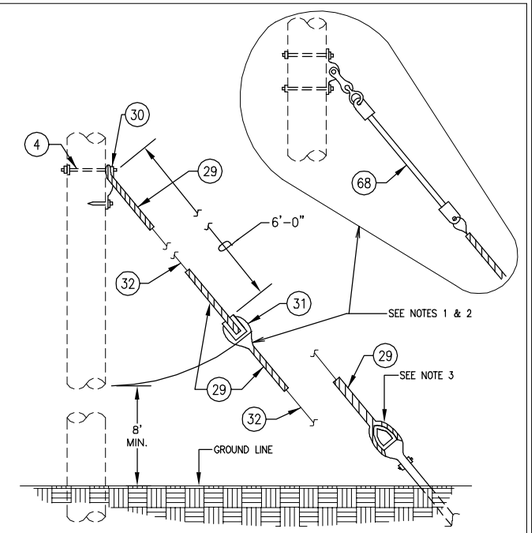


NOTES

1. DRAWING REPRESENTS SYMBOL FOR "GUY-I". OMIT ITEM (31) FOR THE "GUY" SYMBOL.
2. ON CIRCUIT OPERATING VOLTAGES GREATER THAN 15KV, SUBSTITUTE (68) FOR (31).
3. COORDINATE INSTALLATION WITH ANCHOR AS SPECIFIED.
4. UTILIZE ITEM (68) WHEN GUYING ATTACHMENT IS LOCATED IN THE PRIMARY AREA OF THE POLE AS INDICATED BY SPECIFIC DESIGN REQUIREMENTS PROVIDED.
5. BOND ALL GUYS (SUPPLY & COMMUNICATION) AND CONNECT TO POLE GROUND AND SYSTEM NEUTRAL (IF EXISTING).

GUY-I
GUY

SKETCH DATE JUNE 2002 | STYLE OH-32

APPR | DATE | DESCRIPTION | SYM

Stanley Consultants INC.

SEAL

APPROVED

ACTIVITY - SATISFACTORY TO

DATE

APPROVED

FOR EFD FOR COMMANDER NAVFAC

DATE

| A/E | | EFD |
|---|---|---|
| MLG | DESIGN | |
| RJH | DRAWN | |
| MGS | REVIEW | |
| MLG | QC | |
| | CHIEF ARCH./ ENGR. | |

PROJECT MANAGER

FIRE PROTECTION

BRANCH MANAGER

DESIGN DIRECTOR

DEPARTMENT OF THE NAVY
NAVAL FACILITIES ENGINEERING COMMAND
NAVAL STATION ATLANTIC DIVISION
NORFOLK, VIRGINIA
U.S. NAVAL STATION GUANTANAMO BAY, CUBA

# 34.5 KV LINE DIFFERENTIAL SYSTEM

CONSTRUCTION DETAILS - SHEET 1

CODE ID. NO. 80091 | SIZE D

SCALE: NONE

EFD NO.

STA. PROJ. NO. R6-95R1

SPEC. NO.

CONSTR. CONTR. NO. N62470-99-C-9147

NAVFAC DRAWING NO. 4501415

SHEET 48 OF 51

E-47

DRAWFORM REVISION SEPT 2001

REVDATE

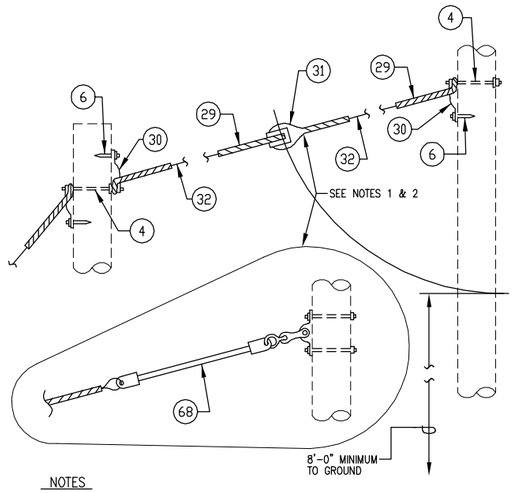


NOTES

1. DRAWING REPRESENTS SYMBOL FOR "SPAN-GUY-I". OMIT ITEM (31) FOR THE "SPAN GUY" SYMBOL.
2. ON CIRCUIT OPERATING VOLTAGES GREATER THAN 15KV, SUBSTITUTE (68) FOR (31).
3. UTILIZE ITEM (68) WHEN GUYING ATTACHMENT IS LOCATED IN THE PRIMARY AREA OF THE POLE AS INDICATED BY SPECIFIC DESIGN REQUIREMENTS PROVIDED.

SPAN GUY-I
SPAN GUY

SKETCH DATE JUNE 2002 | STYLE OH-33

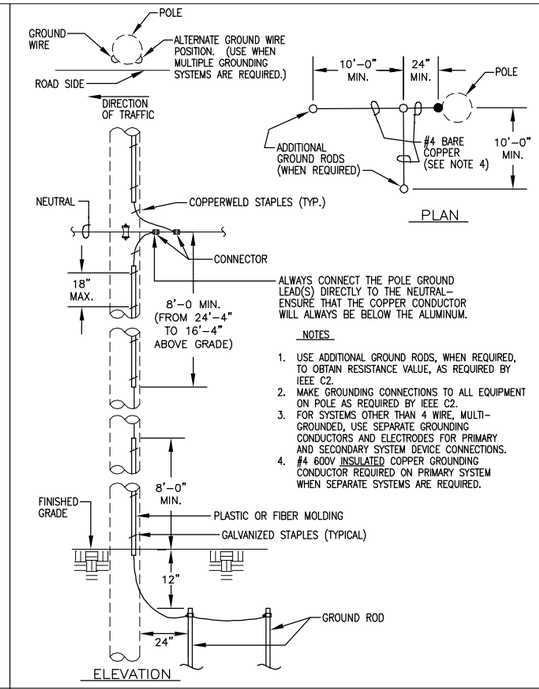


NOTES

1. USE ADDITIONAL GROUND RODS, WHEN REQUIRED, TO OBTAIN RESISTANCE VALUE, AS REQUIRED BY IEEE C2.
2. MAKE GROUNDING CONNECTIONS TO ALL EQUIPMENT ON POLE AS REQUIRED BY IEEE C2.
3. FOR SYSTEMS OTHER THAN 4 WIRE, MULTI-GROUNDED, USE SEPARATE GROUNDING CONDUCTORS AND ELECTRODES FOR PRIMARY AND SECONDARY SYSTEM DEVICE CONNECTIONS.
4. #4 600V INSULATED COPPER GROUNDING CONDUCTOR REQUIRED ON PRIMARY SYSTEM WHEN SEPARATE SYSTEMS ARE REQUIRED.

GROUND

SKETCH DATE JUNE 2002 | STYLE OH-41

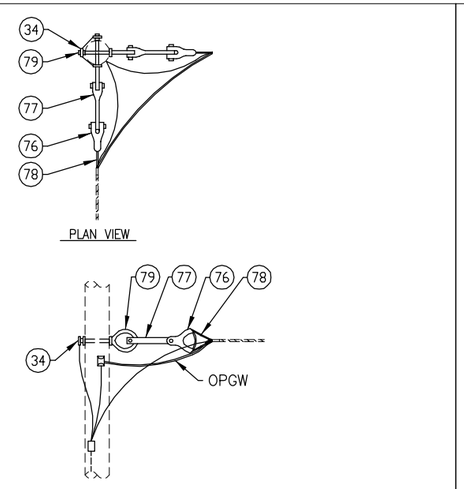


NOTES

1. USE SYMBOL OPGW-DDE AT LARGE ANGLE, DOUBLE DEADEND, AND SPLICE LOCATIONS.
2. SYMBOL OPGW-DDE SHOWN. FOR SINGLE DEADEND USE OPGW-DE.
3. BOND POLE GROUND TO MOUNTING HARDWARE AND EACH DEADEND.

OPGW-DDE, OPGW-DE

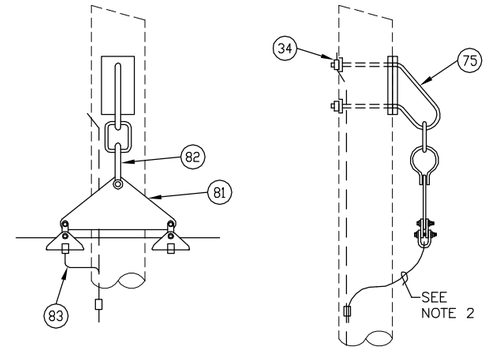


NOTES

1. DRAWING INDICATES SYMBOL OPGW-DS FOR OPGW-SS SUBSTITUTE (80) FOR (81) & (82)
2. BOND POLE GROUND TO BRACKET & SUSPENSION CLAMP.

OPGW-SS, OPGW-DS

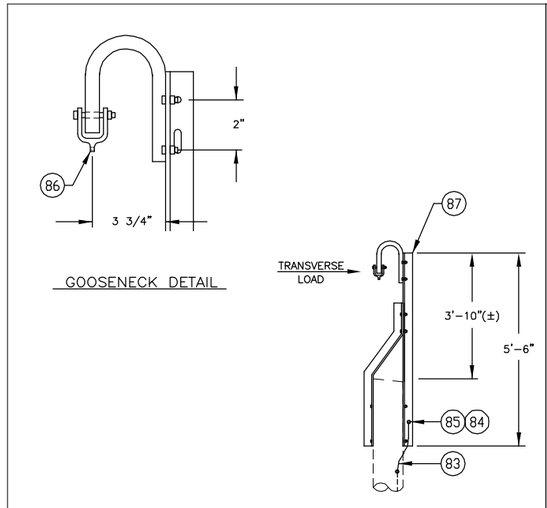


NOTES

1. ULTIMATE TRANSVERSE LOAD RATING OF ASSEMBLY: 375 LBS, MINIMUM.

OPGW-EXT1

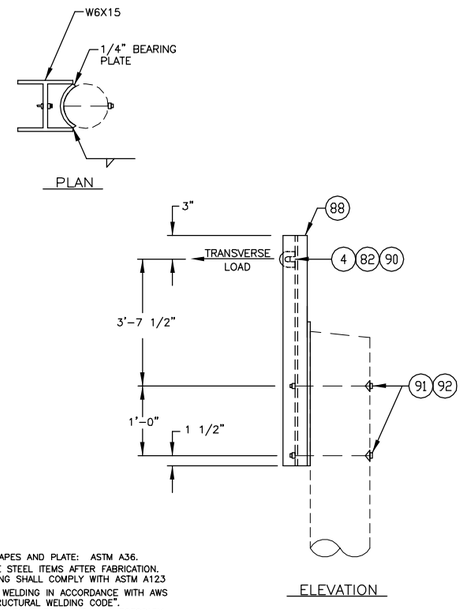


NOTES

1. STEEL SHAPES AND PLATE: ASTM A36.
2. GALVANIZE STEEL ITEMS AFTER FABRICATION. GALVANIZING SHALL COMPLY WITH ASTM A123
3. PERFORM WELDING IN ACCORDANCE WITH AWS D1.1 "STRUCTURAL WELDING CODE".
4. FIELD MEASUREMENTS: MAKE ALL NECESSARY FIELD MEASUREMENTS OF EXISTING STRUCTURES AND EQUIPMENT TO VERIFY DIMENSIONS SHOWN ON DRAWINGS AND TO PROVIDE DIMENSIONS NOT SHOWN, PRIOR TO FABRICATION.

OPGW-EXT2

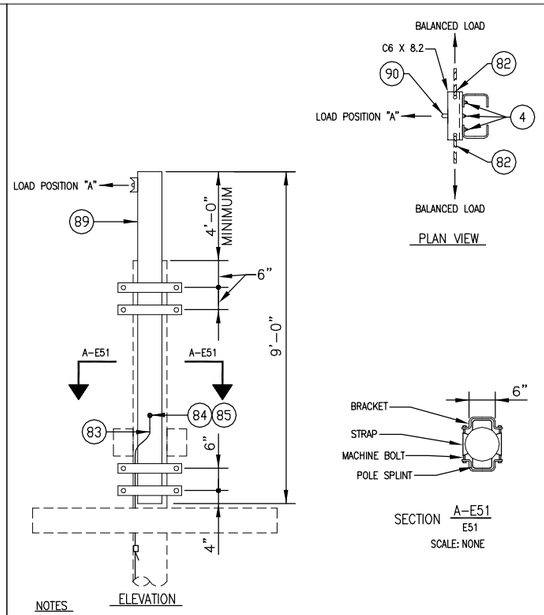


NOTES

1. POLE SPLINTS MANUFACTURED FROM ¼" HIGH – TENSILE STEEL.
2. ULTIMATE LOAD RATING, 3,500 LB MINIMUM AT LOAD POSITION "A".
3. BOND BRACKET TO POLE GROUND.

OPGW-EXT3

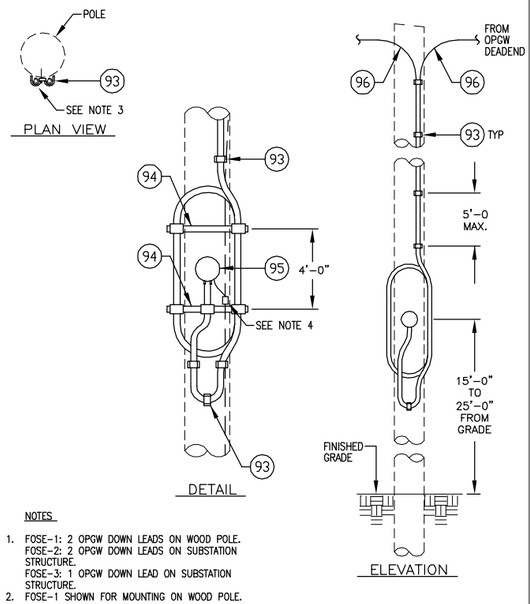


NOTES

1. FOSE-1: 2 OPGW DOWN LEADS ON WOOD POLE.
   FOSE-2: 2 OPGW DOWN LEADS ON SUBSTATION STRUCTURE.
   FOSE-3: 1 OPGW DOWN LEAD ON SUBSTATION STRUCTURE.
2. FOSE-1 SHOWN FOR MOUNTING ON WOOD POLE. FOR FOSE-2 AND FOSE-3, OMIT OPGW COIL AND MOUNT ENCLOSURE 5' – 8' ABOVE GROUND.
3. PLACE DUMMY SECTION OF OPGW IN UNOCCUPIED POSITION OF GUIDE CLAMPS.
4. BOND ENCLOSURE TO POLE GROUND.

FOSE-1, FOSE-2, FOSE-3

APPR | DATE | DESCRIPTION | SYM

Stanley Consultants INC.

SEAL

APPROVED

ACTIVITY – SATISFACTORY TO

DATE

APPROVED

FOR EFD FOR COMMANDER NAVFAC

DATE

| A/E | EFD |
|---|---|
| MLG | DESIGN |
| RJH | DRAWN |
| MGS | REVIEW |
| MLG | QC |
| | CHIEF ARCH./ ENGR. |
| | PROJECT MANAGER |
| | FIRE PROTECTION |
| | BRANCH MANAGER |
| | DESIGN DIRECTOR |

DEPARTMENT OF THE NAVY
NAVAL FACILITIES ENGINEERING COMMAND
ATLANTIC DIVISION
NORFOLK, VIRGINIA
NAVAL STATION
U.S. NAVAL STATION
GUANTANAMO BAY, CUBA

# 34.5 KV LINE DIFFERENTIAL SYSTEM

CONSTRUCTION DETAILS – SHEET 2

CODE ID. NO. 80091 | SIZE D

SCALE: NONE

EFD NO.

STA. PROJ. NO. R6-95R1

SPEC. NO.

CONSTR. CONTR. NO. N62470-99-C-9147

NAVFAC DRAWING NO. 4501416

SHEET 49 OF 51

E-48

DRAWFORM REVISION SEPT 2001

REVDATE

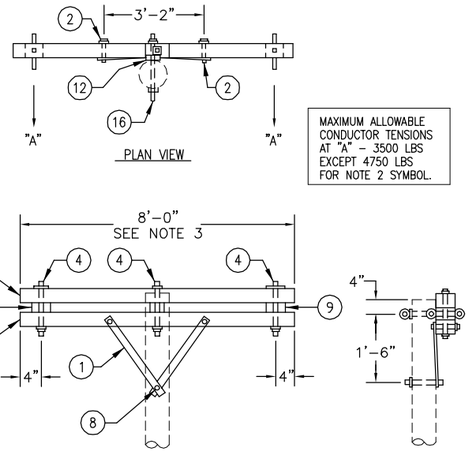


ELEVATIONS

NOTES

1. DRAWING INDICATES SYMBOL DX-DE-FB-BOX. SUBSTITUTE (7) FOR (1) AND (8) FOR (2) ON SYMBOL DX-DE-AB-BOX.
2. SUBSTITUTE (72) FOR (3), (7) FOR (1), AND (8) FOR (2) ON SYMBOL DX-DE-AB-BOX-HD.
3. FOR 10' CROSSARM ASSEMBLY, SUBSTITUTE (72) FOR (3), (7) FOR (1), AND (8) FOR (2) ON SYMBOL DX10-DE-AB-BOX-HD.

DX-DE-FB-BOX, DX-DE-AB-BOX
DX-DE-AB-BOX-HD, DX10-DE-AB-BOX-HD

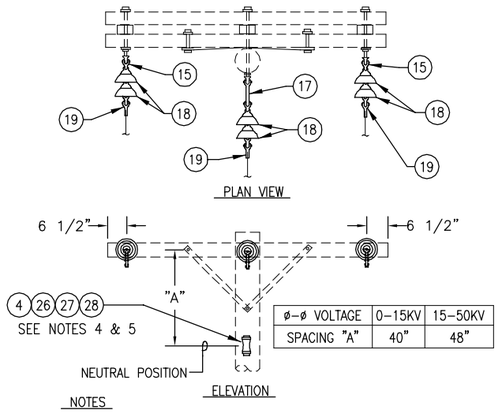


| ø-ø VOLTAGE | 0-15KV | 15-50KV |
|---|---|---|
| SPACING "A" | 40" | 48" |

NOTES

1. DRAWING REPRESENTS SYMBOL FDE3-N. ELIMINATE INSULATOR ASSEMBLY FOR MIDDLE PHASE ON SYMBOLS FDE2 AND FDE2-N.
2. DRAWING REPRESENTS DEADEND ASSEMBLY FOR CIRCUIT VOLTAGES >5KV AND ≤15KV. REFER TO SPECIFICATIONS SECTION 16301 FOR NUMBER AND CLASS OF INSULATORS REQUIRED FOR EACH VOLTAGE LEVEL.
3. OMIT ITEMS (4), (26) (27) AND (28) FOR NEUTRAL ON FDE2 AND FDE3.
4. FOR NEUTRAL CONDUCTOR LARGER THAN #2 AWG, SUBSTITUTE (19) FOR (26), (27) AND (28).
5. MODIFY THE NEUTRAL SPACING "A" AS INDICATED ON OTHER SKETCHES FOR TRANSFORMER AND U.G. TERMINAL INSTALLATIONS.

FDE3-N, FDE3, FDE2-N, FDE2
(0-50KV)

| | | SKETCH DATE | JUNE 2002 | STYLE | OH-15 |
|---|---|---|---|---|---|

| REVDATE | APPR | DATE | DESCRIPTION | SYM |
|---|---|---|---|---|

Stanley Consultants INC.

SEAL

APPROVED

ACTIVITY - SATISFACTORY TO

DATE

APPROVED

FOR EFD FOR COMMANDER NAVFAC

DATE

| A/E | EFD |
|---|---|
| MLG | DESIGN |
| RJH | DRAWN |
| MGS | REVIEW |
| MLG | QC |
| | CHIEF ARCH./ ENGR. |
| PROJECT MANAGER | |
| FIRE PROTECTION | |
| BRANCH MANAGER | |
| DESIGN DIRECTOR | |

DEPARTMENT OF THE NAVY
NAVAL FACILITIES ENGINEERING COMMAND
ATLANTIC DIVISION
NORFOLK, VIRGINIA
NAVAL STATION
U.S. NAVAL STATION
GUANTANAMO BAY, CUBA

# 34.5 KV LINE DIFFERENTIAL SYSTEM

CONSTRUCTION DETAILS - SHEET 3

CODE ID. NO. 80091 | SIZE D

SCALE: NONE

EFD NO.

STA. PROJ. NO. R6-95R1

SPEC. NO.

CONSTR. CONTR. NO.
N62470-99-C-9147

NAVFAC DRAWING NO.
4501417

SHEET 50 OF 51

E-49

DRAWFORM REVISION SEPT 2001

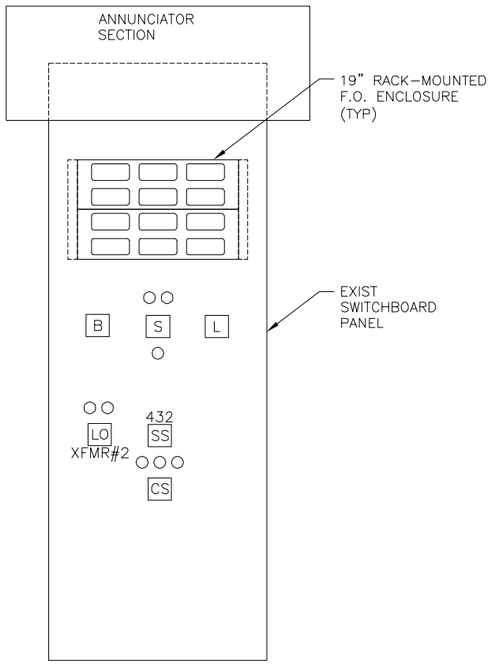


FO ENCLOSURE MOUNTING DETAIL
PP4

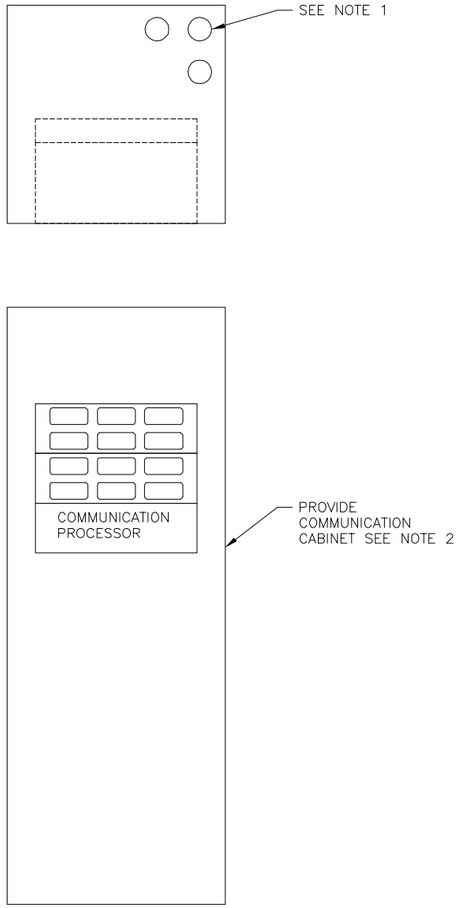


COMMUNICATION CABINET DETAIL
TYPICAL FOR PP1, PP2, TAURMAN AVE, VILLAMAR

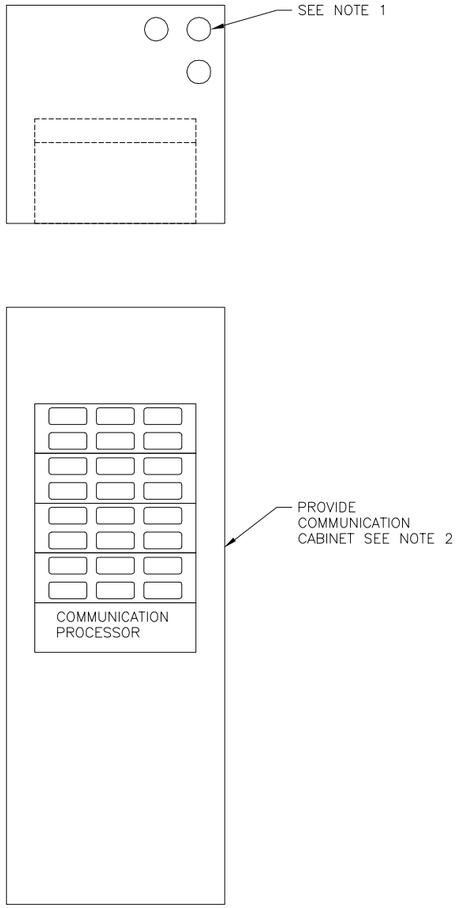


COMMUNICATION CABINET DETAIL
CENTRAL AVENUE

NOTES:
1. PROVIDE 3-2 1/2" INSULATED BUSHINGS IN TOP COVER BELOW WIREWAY.
2. PROVIDE HOLE SPACING FOR 19" RACK MOUNTING.

| REV | DATE | DESCRIPTION | APPR |
|---|---|---|---|

Stanley Consultants INC.

SEAL

APPROVED
ACTIVITY - SATISFACTORY TO
DATE
APPROVED
FOR EFD FOR COMMANDER NAVFAC
DATE

| A/E | | EFD |
|---|---|---|
| MLG | DESIGN | |
| RJH | DRAWN | |
| JCS | REVIEW | |
| MLG | QC | |
| | CHIEF ARCH./ ENGR. | |

PROJECT MANAGER
FIRE PROTECTION
BRANCH MANAGER
DESIGN DIRECTOR

DEPARTMENT OF THE NAVY
NAVAL FACILITIES ENGINEERING COMMAND
ATLANTIC DIVISION
NORFOLK, VIRGINIA
NAVAL STATION
U.S. NAVAL STATION
GUANTANAMO BAY, CUBA

# 34.5 KV LINE DIFFERENTIAL SYSTEM

COMMUNICATION CABINET DETAILS

CODE ID. NO. 80091 | SIZE D
SCALE: NONE
EFD NO.
STA. PROJ. NO. R6-95R1
SPEC. NO.
CONSTR. CONTR. NO. N62470-99-C-9147
NAVFAC DRAWING NO. 4501418
SHEET 51 OF 51

E-50

DRAWFORM REVISION SEPT 2001