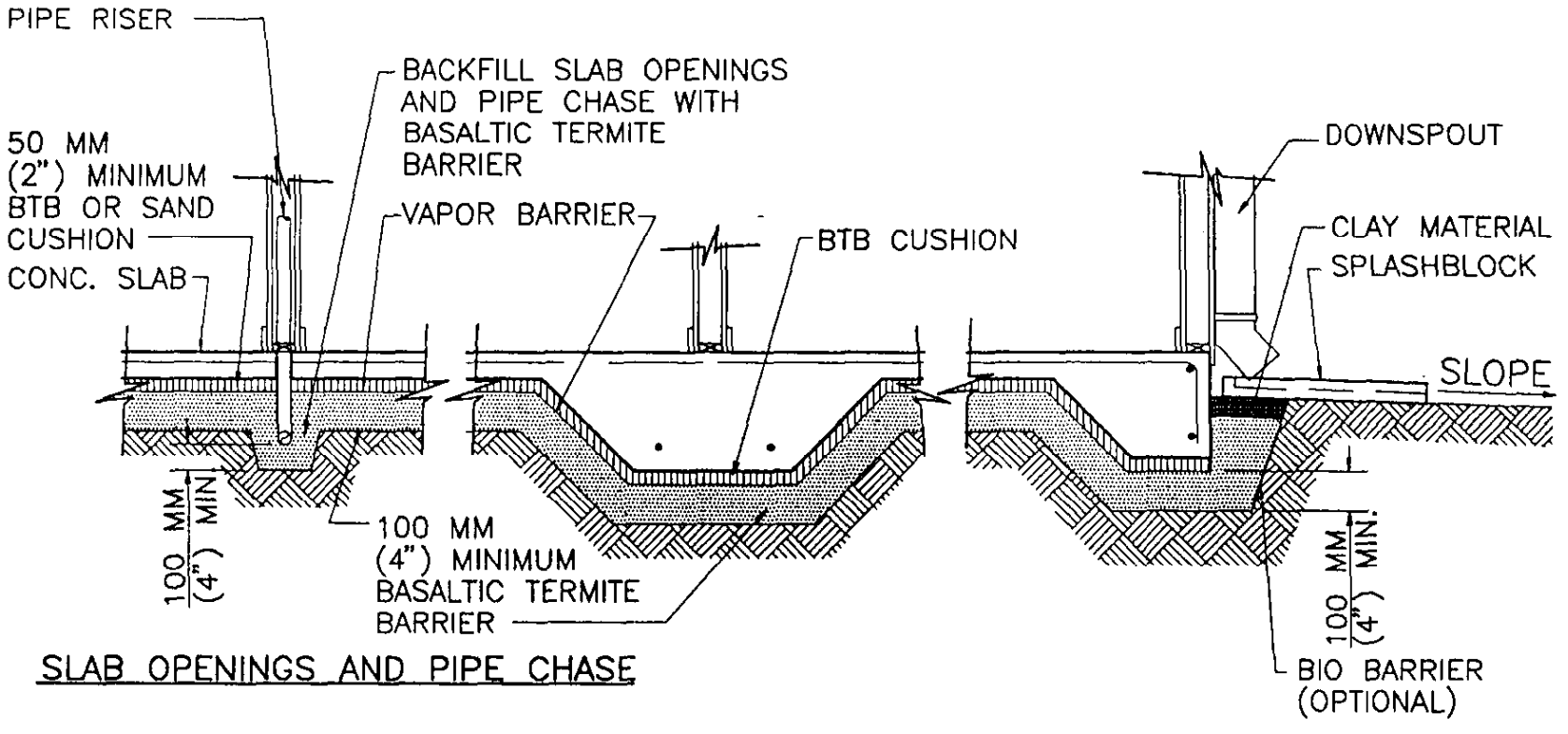

SLAB OPENINGS AND PIPE CHASE

NOTE:
BASALTIC TERMITE BARRIER DETAILS PRESENTED FOR COMMON RESIDENTIAL CONSTRUCTION.

TYPICAL DETAILS

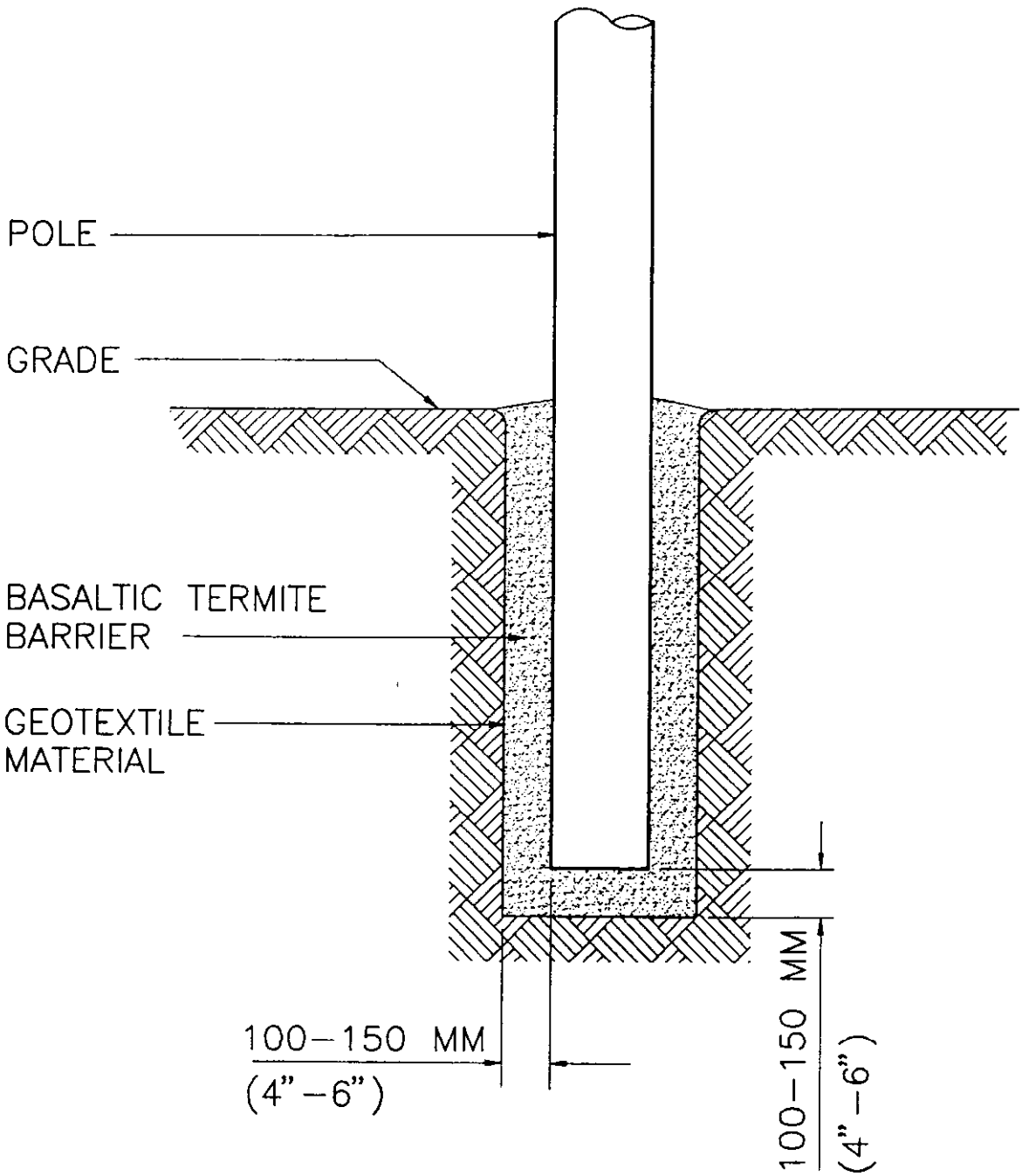

SETTING UTILITY POLE IN GROUND WITH BASALTIC TERMITE BARRIER FILL

SKETCH – 3

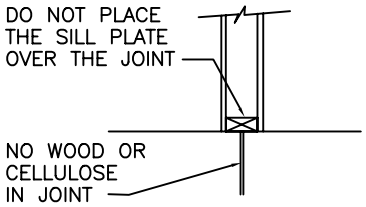

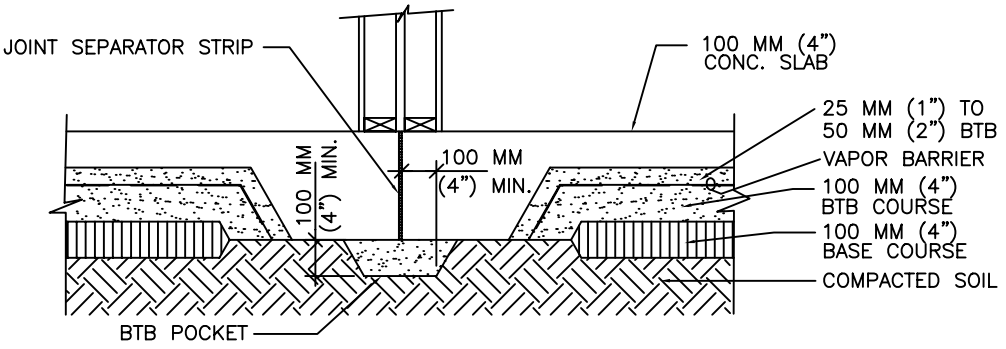

DETAIL @ INTERIOR EXPANSION JOINT

SKETCH – 4

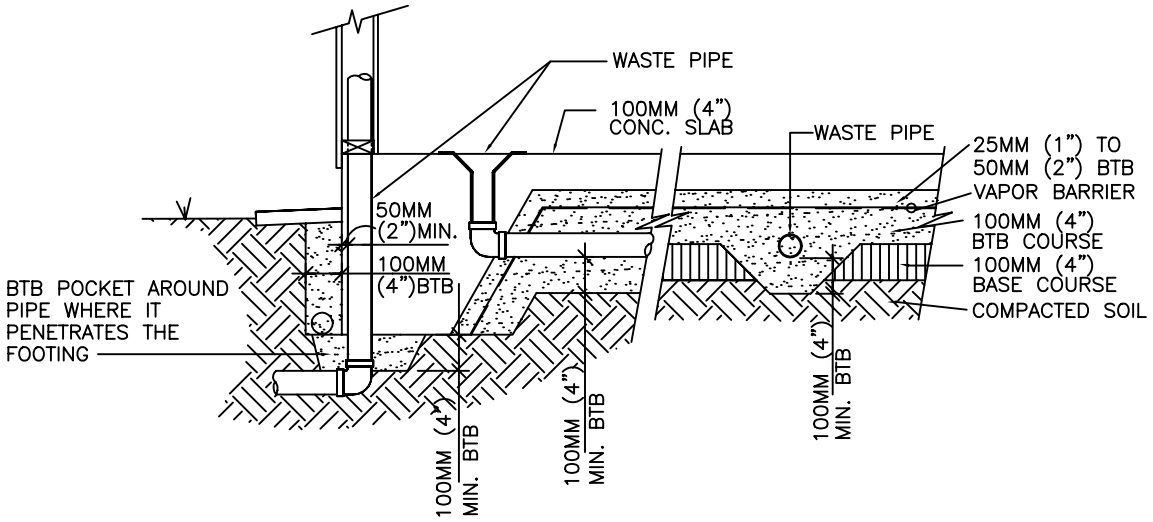

DETAILS AT SUBSLAB DRAIN PIPING

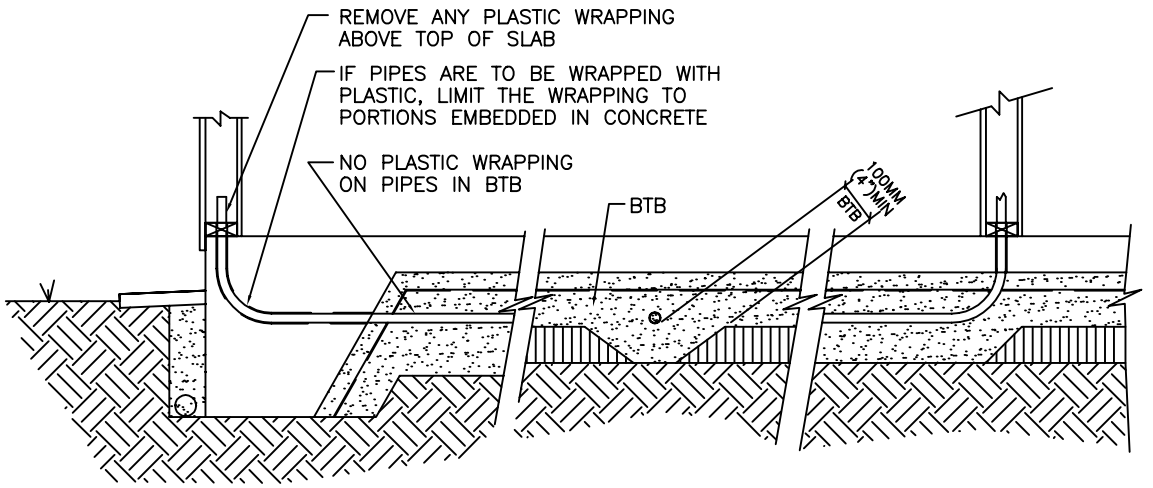

DETAILS AT SUBSLAB WATER PIPING

SKETCH – 5

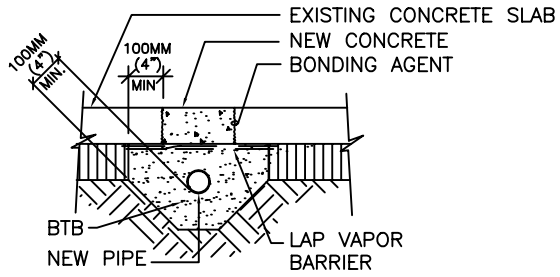

RENOVATION DETAIL
FOR ADDED PIPE

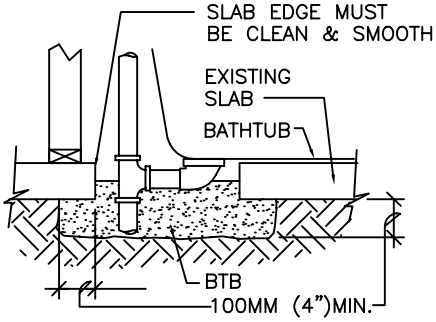

REMEDIAL DETAIL AT
BATHTUB BLOCKOUT

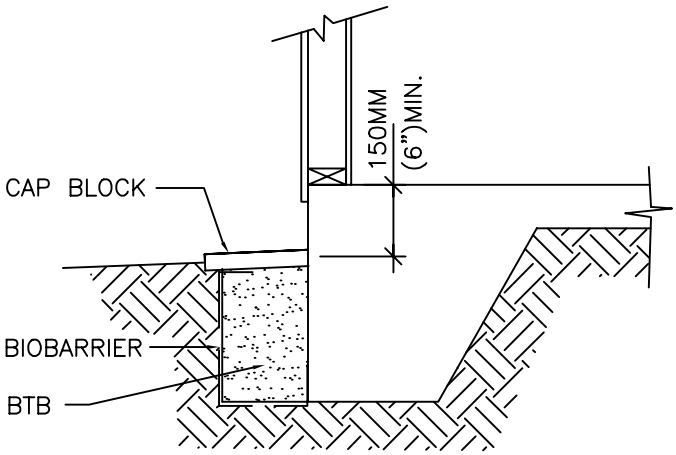

REMEDIAL DETAIL FOR
PERIMETER PROTECTION

SKETCH – 6

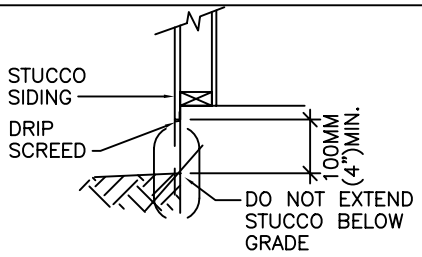

DETAIL AT STUCCO SIDING

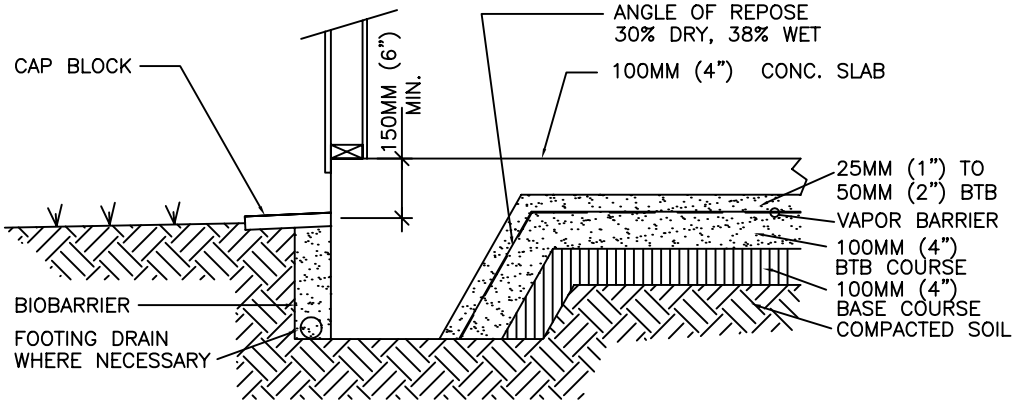

DETAIL AT TYPICAL SLAB EDGE

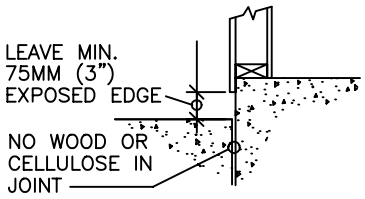

DETAIL AT SIDING

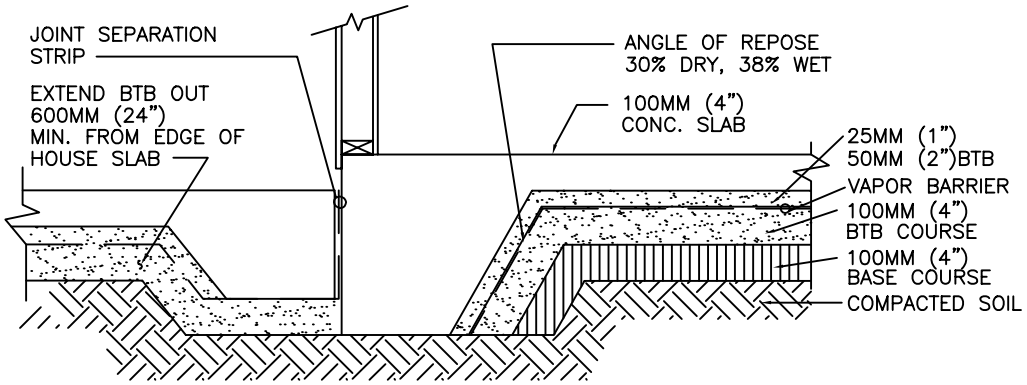

DETAIL AT GARAGE OR LANAI SLAB TO HOUSE SLAB

SKETCH – 7

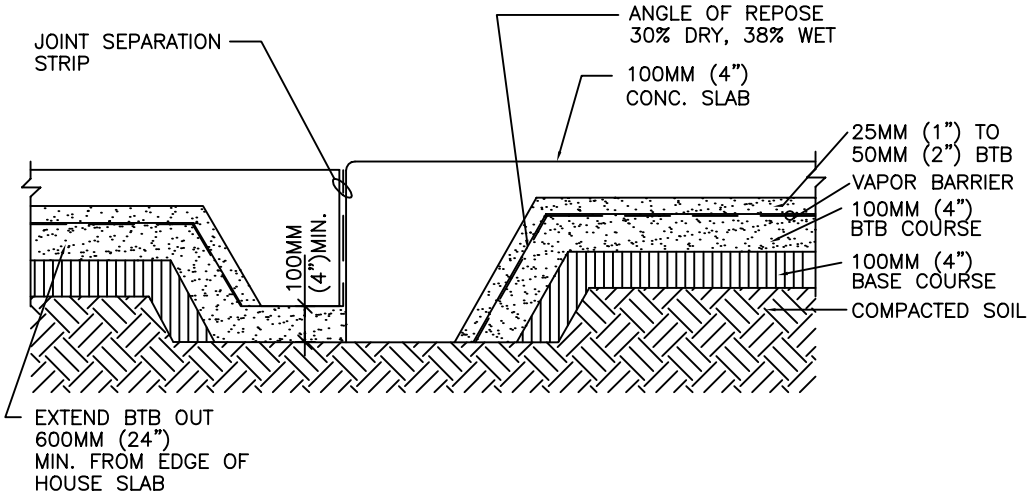

DETAIL AT DRIVEWAY SLAB TO GARAGE SLAB

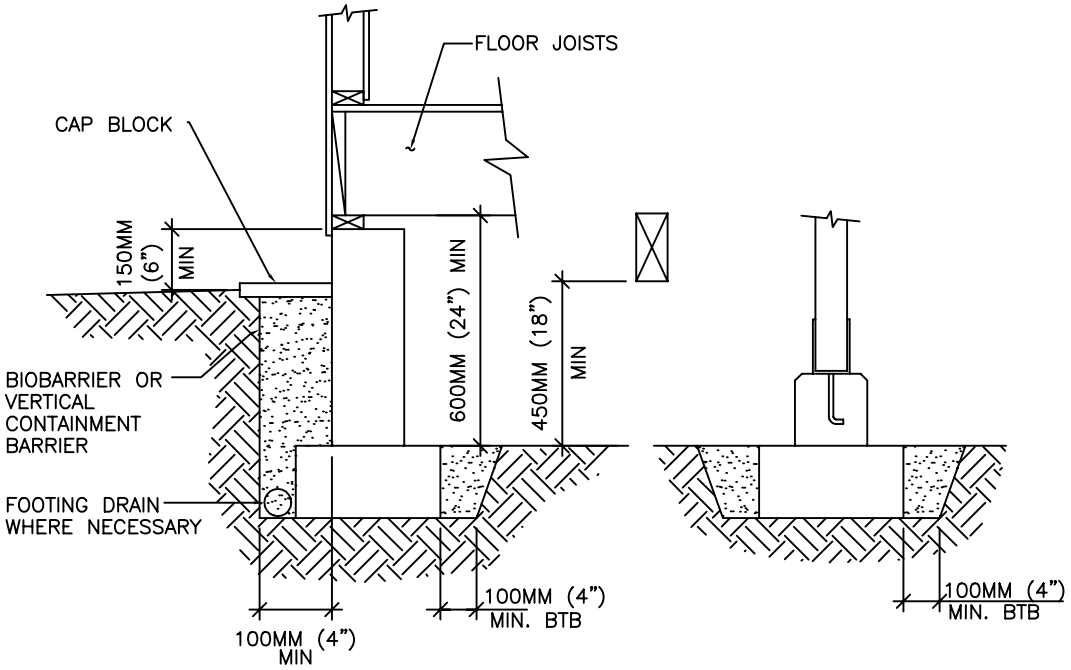

DETAIL @ PERIMETER FOUNDATION

DETAIL @ INTERIOR FOUNDATION

SKETCH – 8

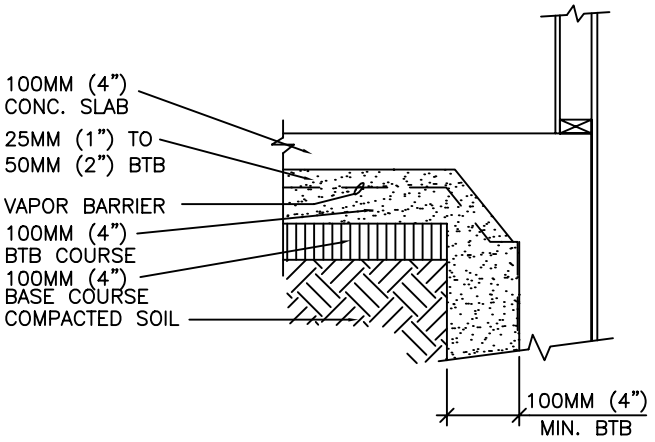

DETAIL @ SLAB ON RETAINING WALL

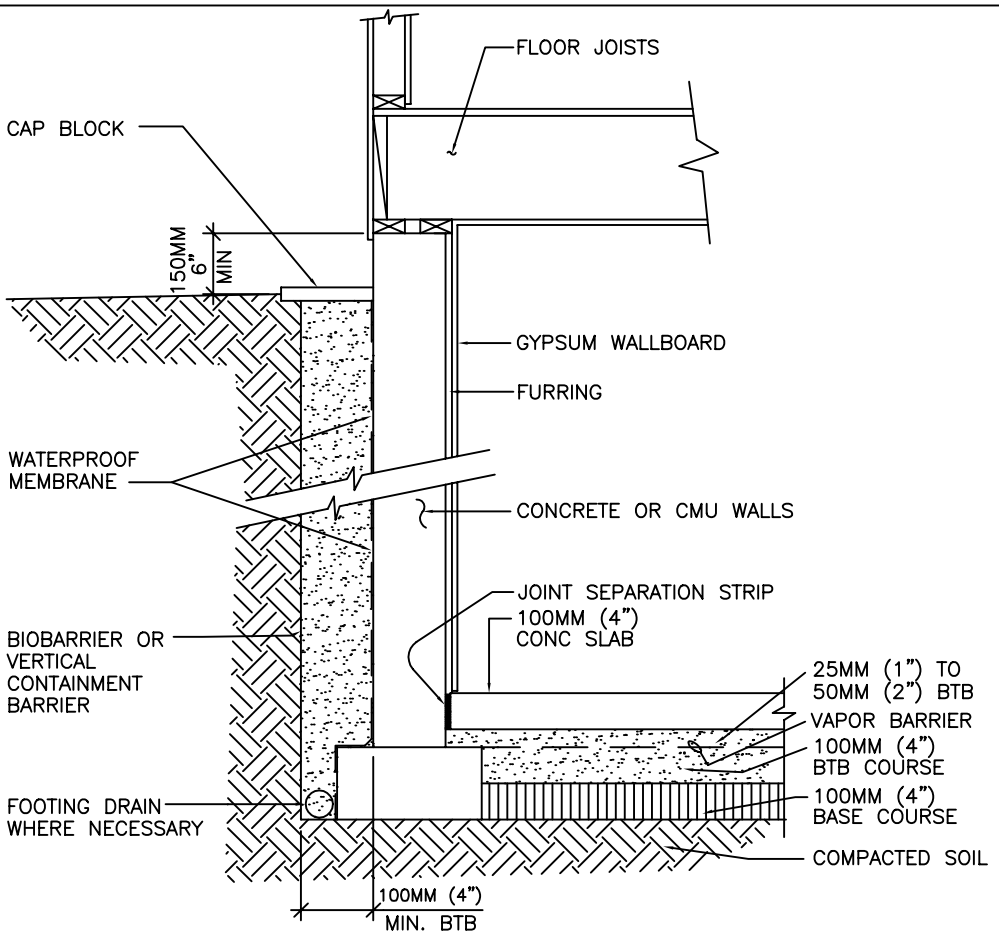

DETAIL @ RETAINING WALL
W\ WALL FOOTING

SKETCH – 9

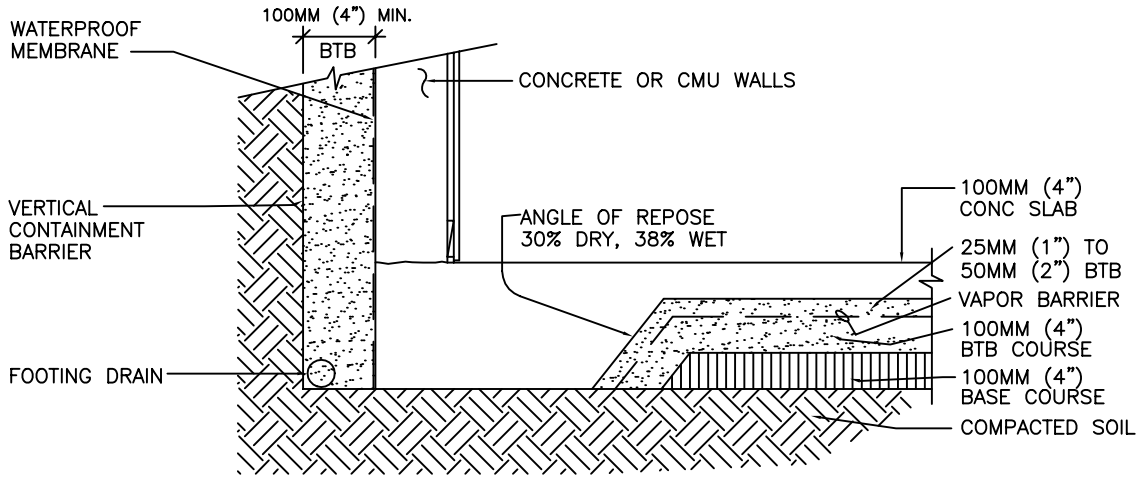

DETAIL @ RETAINING WALL
W\ THICKENED SLAB EDGE

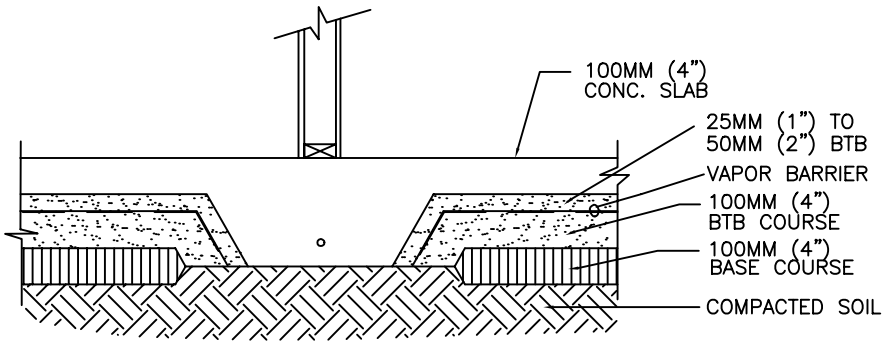

DETAIL @ INTERIOR THICKENED SLAB