NAVAIR 51-50AAA-2

~~1 JULY 1998~~XX APRIL 2002

DRAFT

DRAFT TECHNICAL MANUAL

GENERAL REQUIREMENTS

FOR

SHOREBASED AIRFIELD

MARKING AND LIGHTING

DISTRIBUTION STATEMENT C. Distribution authorized to U.S. Government agencies and their contractors to protect publications required for official use or for administrative or operational purposes only (1 October 1987). Other requests for this document shall be referred to Commanding Officer, Naval Air Technical Services Facility, 700 Robbins Avenue, Philadelphia, PA 19111-5097.

DESTRUCTION NOTICE - For unclassified, limited documents, destroy by any method that will prevent disclosure of contents or reconstruction of the document.

Published by Direction of

Commander, Naval Air Systems Command

THIS REVISION REPLACES THE EDITION DATED 1 JULY 1998

DRAFT

NUMERICAL INDEX OF EFFECTIVE WORK PACKAGE

List of Current Changes

Original 0 .....

Only those work packages assigned to the manual are listed in this index. Insert change , date . Dispose of superseded work packages. If change pages are issued to a work package, insert the changed pages in the applicable work package. The portion of the text affected in a changed or revised work package is indicated by change bars or the change symbol "R" in the outer margin of each column of text. Changes to illustrations are indicated by pointing hands or change bars, as applicable.

WP Number	Title	Change Number
Title		0
Page A		0
001 00	Alphabetical Index	0
002 00	Introduction	0
003 00	Approach Visual Aids	0
003 01	Airfield Identification Marking	0
003 02	Airport Beacons	0
003 03	Wind Indicators	0
003 04	Circling Guidance Lights (CGL)	0
003 05	Runway End Identification Lights (REIL)	0
003 06	Approach Lights, Category I - ALSF-1	0
003 07	Approach Lights, Category II And Category III - ALSF-2	0
003 08	Short Approach Light System (SALS)	0
003 09	Obstruction Markings	0
003 10	Obstruction Lightings	0
003 11	Visual Approach Slope Indicator (VASI) System	0
003 12	Precision Approach Path Indicator (PAPI) System	0
003 13	Optical Landing Aids (OLA)	0
003 14	Medium-Intensity Approach Light System With Runway Alignment Indicator Lights (MALSR)	0
004 00	Runway Visual Aids	0
004 01	Runway Markings	0
004 02	Runway Threshold Lights	0
004 03	Displaced Threshold Lights And Markings	0
004 04	Runway End Lights	0
004 05	High-Intensity Runway Edge Lights (HIRL)	0
004 06	Runway Centerline Lights (RCL)	0
004 07	Touchdown Zone Lights (TDZL)	0
004 08	Runway Exit Lights (TDLZ)	0
004 09	Runway Distance Markers (RDM)	0
004 10	Arresting Gear Markers And Markings	0
005 00	Taxiway Visual Aids	0
005 01	Taxiway Markings	0
005 02	Taxiway Edge Lights	0
005 03	Taxiway Centerline Lights	0
005 04	Taxiway Guidance Signs	0
005 05	Special Taxiway Signs (TACAN, Billboards)	0

NUMERICAL INDEX OF EFFECTIVE WORK PACKAGE (Continued)

WP Number	Title	Change Number
005 06	Holding Position Signs and Lights for Intersections with Runways	0
005 07	Taxiway Lights for Runways Used as Taxiways	0
006 00	Special Lights and Markings Visual Aids	0
006 01	Apron and Parking Area Markings	0
006 02	Apron and Parking Area Lights	0
006 03	Wheels-up and Wave-off Lights	0
006 04	Simulated Aircraft Carrier Deck Lights and Markings	0
006 05	Fueling Area Lights	0
006 06	Portable Emergency Airfield Lights	0
007 00	Helipad Visual Aids	0
007 01	Helipad Markings	0
007 02	Helipad Perimeter Lights	0
007 03	Helipad Approach Lights	0
007 04	Heliport Runway Lights and Markings ~~*(to be provided)*~~	0
007 05	Heliport Taxiway Lights and Markings ~~*(to be provided)*~~	0
007 06	Special Helipad Lights	0
~~007 07~~	~~Helicopter Elevated Platforms *(to be provided)*~~	~~0~~
008 00	Auxiliary Landing Field Lighting and Marking	0
009 00	Electrical Power and Control for Visual Aids	0
009 01	Auxiliary Power and Power Transfer Equipment	0
009 02	Constant-Current Regulators	0
009 03	Isolation and Distribution Transformers	0
009 04	Special Power Supplies	0
009 05	Airfield Lighting Control Panels	0
009 06	Special Remote Control Equipment	0

This revision supercedes NAVAIR51-50 AAA-2 dated 1 July 1998 in its entirety. Changes or additions are shown with a change bar located on the page border. Various specifications and standards which were cancelled were deleted. Light fixture photometric figures were deleted, as the information is contained in the FAA documents. IFLOLS (Improved Fresnel Optical Landing System) was added to WP 003 13 and 006 04. ALSF-1 WP 003 06 Approach Light System is replaced by MALSR WP 003 14 for CAT 1 operations.

ALPHABETICAL INDEX

TECHNICAL MANUAL

GENERAL REQUIREMENTS FOR

SHOREBASED AIRFIELDS

MARKING AND LIGHTING

Title	WP Number
Approach Light System, Medium-Intensity with Runway Alignment Indicator Lights (MALSR)	003 14
Approach Light System, Short, (SALS)	003 08
Approach Lights, Category I — ALSF-1	003 06
Approach Lights, Category II and Category III — ALSF-2	003 07
Approach Lights, Helipad	007 03
Approach Path Indicator Systems, Precision, (PAPI)	003 12
Approach Slope Indicator Systems, Visual, (VASI)	003 11
Approach Visual Aids	003 00
Approach Light System, Medium-Intensity with Runway Alignment Indicator Lights (MALSR)	003 14
Approach Light System, Short, (SALS)	003 08
Approach Lights, Category I — ALSF-1	003 06
Approach Lights, Category II and Category III — ALSF-2	003 07
Beacons, Airport	003 02
Circling Guidance Lights (CGL)	003 04
Identification Marking, Airfield	003 01
Obstruction Lightings	003 10
Obstruction Markings	003 09
Optical Landing Aids (OLA)	003 13
Precision Approach Path Indicator (PAPI) Systems	003 12
Runway End Identification Lights (REIL)	003 05
Visual Approach Slope Indicator (VASI) Systems	003 11
Wind Indicators	003 03
Apron and Parking Area Lights	006 02
Apron and Parking Area Markings	006 01
Arresting Gear Markers And Markings	004 10
Auxiliary Landing Field Lighting and Marking	008 00
Auxiliary Power and Power Transfer Equipment	009 01
Beacons, Airport	003 02
Carrier Deck Lights and Markings, Simulated, Aircraft	006 04
Centerline Lights, Runway, (RCL)	004 06
Centerline Lights, Taxiway	005 03
Circling Guidance Lights (CGL)	003 04
Control Panels, Lighting, Airfield	009 05
Displaced Threshold Lights And Markings	004 03
Distance Markers, Runway, (RDM)	004 09
Edge Lights, High-Intensity, Runway, (HIRL)	004 05
Edge Lights, Taxiway	005 02

DRAFT

ALPHABETICAL INDEX (Continued)

Title	Number
Emergency Lights, Airfield ,Portable	006 06
End Lights, Runway	004 04
Equipment, Auxiliary Power and Power Transfer	009 01
Exit Lights, Runway	004 08
Fueling Area Lights	006 05
Guidance Signs, Taxiway	005 04
Helipad Visual Aids	007 00
Approach Lights, Helipad	007 03
Lights, Special, Helipad	007 06
Markings, Helipad	007 01
Perimeter Lights, Helipad	007 02
~~Platforms, Elevated, Helicopter (Reserved)~~	~~007 07~~
Runway Lights and Markings, Heliport ~~(Reserved)~~	007 04
Taxiway Lights and Markings, Heliport ~~(Reserved)~~	007 05
Holding Position Signs and Lights for Intersections with Runways	005 06
Identification Lights, Runway End, (REIL)	003 05
Identification Marking, Airfield	003 01
Introduction	002 00
Isolation and Distribution Transformers	009 03
Landing Aids, Optical, (OLA)	003 13
Lighting and Marking, Auxiliary Landing Field	008 00
Lighting, Obstruction	003 10
Lights and Markings, Aircraft Carrier Deck, Simulated	006 04
Lights And Markings, Displaced Threshold	004 03
Lights and Markings, Runway, Heliport (Reserved)	007 04
Lights and Markings, Taxiway, Heliport (Reserved)	007 05
Lights, Apron and Parking Area	006 02
Lights, Centerline, Runway (RCL)	004 06
Lights, Circling Guidance (CGL)	003 04
Lights, End, Runway	004 04
Lights, Fueling Area	006 05
Lights, Runway Exit	004 08
Lights, Special Helipad	007 06
Lights, Taxiway, for Runways Used as Taxiways	005 07
Lights, Threshold, Runway	004 02
Lights, Touchdown Zone, (TDZL)	004 07
Lights, Wheels-up and Wave-off	006 03
Markers And Markings, Arresting Gear	004 10
Markers, Runway Distance, (RDM)	004 09
Markers, Apron and Parking Area	006 01
Markers, Helipad	007 01
Markers, Obstruction	003 09
Markers, Runway	004 01
Markers, Taxiway	005 01
Obstruction Lightings	003 10
Obstruction Markings	003 09
Optical Landing Aids (OLA)	003 13
Perimeter Lights, Helipad	007 02
Platforms, Elevated, Helicopter (Reserved)	007 07
Power and Control for Visual Aids, Electrical	009 00

ALPHABETICAL INDEX (Continued)

Title	WP Number
Auxiliary Power and Power Transfer Equipment	009 01
Control Panels, Lighting, Airfield	009 05
Power Supplies, Special	009 04
Regulators, Constant-Current	009 02
Remote Control Equipment, Special	009 06
Transformers, Isolation and Distribution	009 03
Power Supplies, Special	009 04
Precision Approach Path Indicator (PAPI) Systems	003 12
Regulators, Constant-Current	009 02
Remote Control Equipment, Special	009 06
Runway End Identification Lights (REIL)	003 05
Runway Lights and Markings, Heliport (Reserved)	007 04
Runway Markings	004 01
Runway Visual Aids	004 00
Arresting Gear Markers And Markings	004 10
Centerline Lights, Runway, (RCL)	004 06
Displaced Threshold Lights And Markings	004 03
Distance Markers, Runway, (RDM)	004 09
Edge Lights, High-Intensity, Runway (HIRL)	004 05
End Lights, Runway	004 04
Exit Lights, Runway	004 08
Markings, Runway	004 01
Threshold Lights, Runway	004 02
Touchdown Zone Lights (TDZL)	004 07
Signs and Lights, Holding Position, for Intersections with Runways	005 06
Signs, Guidance, Taxiway	005 04
Signs, Special, (TACAN, Billboards), Taxiway	005 05
Special Lights and Markings Visual Aids	006 00
Apron and Parking Area Lights	006 02
Apron and Parking Area Markings	006 01
Carrier Deck Lights and Markings, Simulated	006 04
Emergency Lights, Airfield, Portable	006 06
Fueling Area Lights	006 05
Wheels-up and Wave-off Lights	006 03
Taxiway Lights and Markings, Heliport (Reserved)	007 05
Taxiway Visual Aids	005 00
Centerline Lights, Taxiway	005 03
Edge Lights, Taxiway	005 02
Guidance Signs, Taxiway	005 04
Holding Position Signs and Lights for Intersections with Runways	005 06
Lights, Taxiway, for Runways Used as Taxiways	005 07
Markings, Taxiway	005 01
Signs, Special, (TACAN, Billboards), Taxiway	005 05
Threshold Lights, Runway	004 02
Touchdown Zone Lights (TDZL)	004 07
Transformers, Isolation and Distribution	009 03
Visual Aids, Lights and Markings, Special	006 00
Visual Approach Slope Indicator (VASI) Systems	003 11
Wheels-up and Wave-off Lights	006 03
Wind Indicator	003 03

ALPHABETICAL INDEX (Continued)

Title	WP Number

INTRODUCTION

TECHNICAL MANUAL

GENERAL REQUIREMENTS FOR

SHOREBASED AIRFIELDS

MARKING AND LIGHTING

Alphabetical Index

Subject **Page No.**

Airfield Safety Clearances.... 4
Application. 3
Approach Min~~m~~imums.... 5
Background.... 3
Cross Reference Of Abbreviations, Symbols, Terms.... 6
Decision Height (DH).... 5
Deviations And Approvals.... 3
Equipment.... 6
Existing Facilities.... 4
Flight Rules 4
History. 3
Instrument Flight Rules (IFR) 4
International Military Standards.... 3
Justification For Installations. 3
Maintenance. 6
Meteorological Flight Rules.... 4
Other Factors.... 5
Precedence.... 2
Procedures For Recommending Changes To The Manual.... 2
Purpose And Scope.... 2
Purpose. 2
Reference Material.... 7
Related Design Manuals.... 3
Runway Visual Range (RVR). 5
Safety. 5
Scope.... 2
Technical Manual Updates 2
Use Of Manual. 3
Visual Flight Rules (VFR) 4

Record of Applicable Technical Directives

None

1. PURPOSE AND SCOPE.

2. PURPOSE.

The purpose of this manual is to provide the general requirements for airfield Visual Landing Aids for approaches, landings, takeoffs, taxiing, and surface maneuvering of aircraft on Navy and Marine Corps shorebased airfields. **This manual should not be used for designing or planning of Expeditionary Airfields (EAF).** The standard configurations and permitted variations are described. Installation requirements affecting the configurations and performances are discussed. The types of equipment which are currently approved for use in new installations are indicated. It is not the intent of this manual to direct or request implementation, but to establish guidance information for use when implementation is directed.

3. SCOPE.

This manual provides information and requirements for designing and installing the various visual landing aids systems used for shorebased Navy airfields and heliports. These visual landing aids include lighting, signs, and markings. Typical installations are described indicating the configurations and equipment which comply with Navy requirements presently in effect. This manual is a requirements guide to be used for new installations and for improving existing installations and is divided into sections of visual aids intended to support different phases of aircraft operations at airfields. Each section of the manual is composed of one or more Work Packages (WP) describing the configurations and requirements for a particular visual aid system. The first WP of each section identifies each type of visual landing aid system included in that section. The visual aids sections of the manual are as follows:

a. Approach Visual Aids (WP003 00),

b. Runway Visual Aids (WP004 00),

c. Taxiway Visual Aids (WP005 00),

d. Special Lights and Markings Visual Aids (WP006 00),

e. Helipad Visual Aids (WP007 00),

f. Auxiliary Landing Fields Lighting and Markings (WP008 00),

g. Electrical Power and Control for Visual Aids (WP009 00).

4. PRECEDENCE.

This manual supersedes and replaces Technical Manual, NAVAIR 51-50AAA-2, General Requirements for Shorebased Airfield Marking and Lighting, 1 September 1986, with change 1 of 30 June 1988, in its entirety.

5. PROCEDURES FOR RECOMMENDING CHANGES TO THE MANUAL.

6. TECHNICAL MANUAL UPDATES.

7. Obtaining And Identifying Manuals.

To receive future changes and revisions to this manual automatically, all activities shall submit their automatic distribution requirements on the Automatic Distribution Requirements Listings floppy disk from the Naval Air Technical Services Facilities (NATSF) Technical Publications Library (TPL). The TPL program is available from the NATSF technical publications specialist in your area or from NATSF (215) 697-4879 or DSN 442-4879. Additional copies of this manual and changes thereto may be procured by submitting a MILSTRIP Form DD 1348 to Navy Publications and Forms Center (NPFC), 5801 Tabor Avenue, Philadelphia, PA 19120. Refer to NAVSUP Publication 2002 to obtain Federal Stock Numbers. Use of this form will not place you on automatic distribution.

8. Change And Revision Of Manuals.

Visual Landing Aid manuals are brought up-to-date periodically, when procedures and other important information are added. Manuals are current to the revision or change data on the title page. The following information applies:

a. A manual CHANGE is not a complete publication; only changed or added pages are issued. The title page of the change contains a change notice and a change data. A complete list of changed pages with their change date is given on the A-page following the title page. The portion of the text affected by the current change is indicated by a vertical line in the outer margins of the page.

b. A manual REVISION is a completely new manual and supercedes the entire preceding issue and its changes. The revision data appears only on the title page. For later changes, the revision date is retained on the title page, with the change noted underneath.

9. MANUAL DEFICIENCY REPORTING OPNAV Form 4790/66 (Rev. 5/88), "TECHNICAL PUBLICATIONS DEFICIENCY REPORT" has been devised to make it as easy as possible for the using activity to suggest corrections, revision, or innovations to the manuals to better serve the user of such information. A sample of this form is shown in figure 1. Only OPNAV Form 4790/66 (Rev. 5/88) may be used for

making comments on NAVAIR manuals. OPNAV Form 4790/66 (Rev. 5/88) will be stocked in the Forms and Publications Segment of the Navy Supply System and may be requisitioned in accordance with NAVSUP Publication #2002.

a. Forward original and one copy to:

Commanding Officer
Naval Air Technical Services Facility
QA Department (04)
700 Robbins Avenue
Philadelphia, PA 19111

b. Forward a copy to:

Commanding Officer
Naval Air Warfare Center
Aircraft Division
~~48J300B596-2~~**4.8.10.300B562-2**
Route 547
Lakehurst, NJ 08733

10. BACKGROUND.

11. HISTORY.

The requirement for visual aids (wind indicators) has existed from the first flight. As aviation progressed to flying at night and in low visibility, more complex visual aids have been required. The present status of air operations is such that new developments in visual landing aids have slowed and standardization has increased. Standardization of visual aids facilities is essential for promoting operational safety and makes it possible for a pilot to rapidly interpret and react to guidance information with a minimum amount of mental concentration. The visual landing aids for both military and civilian airfields are nearly standard, except for the differences in mission and operational procedures.

12. INTERNATIONAL MILITARY STANDARDS.

The Navy and other U.S. military agencies have agreements with the North Atlantic Treaty Organization (NATO) and the Air Standardization Coordinating Committee (ASCC) to develop standardization of airfield visual aids. The requirements of the Air Standards of ASCC and the Standards Agreements (STANAG) of NATO have been considered in developing the requirements for the visual landing aids in this manual.

13. RELATED DESIGN MANUALS.

The Technical Manual provides the general requirements for the visual landing aid standards. For other Navy manuals which have details for design and installation of these visual aids or provide criteria for installations on which these requirements are based refer to the following:

a. ~~MIL-HDBK-1023/1~~**UFC 3-535-02**	~~Airfield Lighting~~**Design Drawings for Visual Air Navigation Facilities**
b. NAVFAC P-80.3 Appendix E	Facility Planning Factor Criteria for Navy and Marine Corps Shore Installations

14. APPLICATION.

15. USE OF MANUAL.

The criteria contained in this manual shall be followed in planning, budgeting, and installing visual aids. The requirements of this manual shall apply for all new and replacement visual landing aids installations at Navy and Marine Corps shorebased airfields except when:

a. International agreements require differences,

b. Only part of an installation configured to prior standards and giving satisfactory performance is to be replaced but differences in configuration or equipment would not be compatible,

c. Where it is impractical to make a standard installation and the request for waivers has been approved.

16. DEVIATIONS AND APPROVALS.

This manual contains the requirements for visual aid installations. Any deviations from these requirements must be authorized by Naval Air Systems Command. Any request for waivers or deviations shall be submitted to NAVAIR Code ~~09YIG~~ **AIR 8.3MB** for approval. Any deviations from the requirements of this manual shall be clearly defined with specific reasons justifying the deviations before approval will be considered.

17. JUSTIFICATION FOR INSTALLATIONS.

This Manual recommends the requirement level for each type of visual aid to be provided for each category of operations. These recommendations are as a general class for Navy airfields. The mission demands, frequency of use of this visual aid, cost of making the installation, the availability of other aids to provide the guidance, and the availability of funding are other factors considered in authorizing installation of a specific visual aid for a given airfield. This Manual does not approve or justify requests for installing a particular visual aid. It

may be one factor among others to be considered in requesting approval for an installation.

18. AIRFIELD SAFETY CLEARANCES.

The visual aids installations shall comply with the requirements of NAVFAC P-80.3 Appendix E and Federal Aviation Regulation (FAR) Part 77. Certain visual aids are exempt from waiver requirements~~, if they are located in accordance with NAVFAC P-272 or MIL-HDBK-1023/1~~.

19. EXISTING FACILITIES.

Existing visual landing aids installed in accordance with requirements in effect at the time of installation may continue to be used and maintained if they provide satisfactory performance for the mission requirements of the airfield. If only a minor part of the system requires replacement, the configurations and equipment may be in accordance with that of the original system. If an appreciable part of the visual aids requires replacement, upgrading to the requirements of this manual should be considered. If the major part of the installation must be replaced, the entire installation shall conform to the requirements of this manual.

20. METEOROLOGICAL FLIGHT RULES.

Each runway of an airfield shall be provided with visual landing aids which will satisfy the requirements for the minimum meteorological conditions for approach, landing, and takeoff operations under the visibility category authorized. It should be noted that OPNAV Inst. 3721.1 establishes the criteria for categorizing Naval Airfields with a category letter based on equipment and services required. This Manual re-defines the "runway" categories with a numerical rating for precision IFR conditions ~~based on STANAGs and ICAO standards~~ and lists the "visual landing aids" required for each category. For other related equipment requirements refer to OPNAV Inst. 3721.1 **and OPNAV Inst. 3722.16 (TERPS)**.

a. Visual Flight Rules (VFR). Rules that govern the procedures for conducting flights under visual conditions. The term "VFR" is also used in the United States to indicate weather conditions that are equal to or greater than minimum VFR requirements. Internationally, the conditions for these operations are referred to as Visual Meteorological Conditions (VMC), which is expressed in terms of visibility, distance from clouds, and weather ceiling equal or greater than the specified minima. The minimum conditions in which VFR operations are permitted is a minimum cloud ceiling of 1000 feet and ground visibility of 3 miles.

b. Instrument Flight Rules (IFR). Rules governing the procedures for conducting instrument flight. (Also a term used by pilots and air traffic controllers to indicate a type of flight plan.) IFR flight operations are dependent upon pilots use of instrument guidance. Internationally, the conditions for these operations are referred to as Instrument Meteorological Conditions (IMC) which is expressed in terms of visibility, distance from clouds, and ceiling less than the minima specified for VMC, i.e., low ceiling and/or poor visibility. As a ceiling becomes lower or the visibility more restrictive, the more precise the electronic and visual guidance must be as required for the following categories:

(1) Nonprecision IFR. IFR operations ~~which~~ **that** use nonprecision electronic aids (TACAN, VORTAC, etc.) to provide directional guidance for straight-in approaches to a Minimum Descent Altitude (MDA) as low as 260 feet and one mile visibility or 5000 feet RVR.

(2) Precision IFR, PAR. Requires precision approach radar and visual aids for approach minimums of not less than 100 feet decision height (DH) and 1600 feet runway visual range (RVR).

~~(2)~~**(3)** Precision IFR, Category I. Require precision electronic aids (ILS~~, PAR,~~ or MLS) and visual aids for approach minimums of 200 feet Decision Height (DH) and 2400 (some cases 1600) feet runway visual range (RVR).

~~(3)~~**(4)** Precision IFR, Category II. Requires precision electronic aids (~~precision~~ ILS or MLS) and visual aids for approach minimums of 100 feet DH and 1200 feet RVR.

~~(4)~~**(5)** Precision IFR, Category IIIA. Requires precision electronic aids (~~precision~~ ILS or MLS) and visual aids for approach minimums of 0 feet DH and 700 feet RVR.

~~(5)~~**(6)** Precision IFR, Category IIIB. Requires precision electronic aids (~~precision~~ ILS or MLS) and visual aids for approach minimums of 0 feet DH and 150 feet RVR.

~~(6)~~**(7)** Precision IFR, Category IIIC. Requires precision electronic aids (~~precision~~ ILS or MLS) and visual aids for approach minimums of 0 feet DH and 0 feet RVR.

21. APPROACH MINIMUMS.

The minimum visibility prescribed for landing an aircraft while utilizing instrument approach procedures. The minimums apply with other limitations set forth in FAR Part 91 with respect to Minimum Descent Altitude

(MDA) or Decision Height (DH) prescribed in instrument approach procedures as follows:

a. Straight-in landing minimums - A statement of MDA and visibility, or DH and visibility, required for straight-in landing on a specified runway.

b. Circling minimums - A statement of MDA and visibility required for the circle-to-land maneuver.

The minimums depend on several factors including the following:

a. Type of instrument approach,

b. Aircraft approach category,

c. Controlling obstacles,

d. Local terrain,

e. Airport lighting (runway and approach lighting systems),

f. Runway visual range.

For the method to determine the approach minimums for an approach to a given runway, refer to OPNAV Inst. 3722.16.

22. RUNWAY VISUAL RANGE (RVR).

An instrumentally derived value, based on standard calibrations, that represents the horizontal distance a pilot will see down the runway from the approach end. It is based on the sighting of either high intensity runway Lights or visual contrast of other targets whichever yields the greater visual range. RVR, in contrast to prevailing or runway visibility, is based on what a pilot in a moving aircraft should see looking down the runway. RVR is horizontal visual range, not slant visual range. It is based on a device used to measure the transmission of light through a medium made near the touchdown point of the instrument runway and is reported in hundreds of feet. Internationally, RVR is the maximum distance in the direction of takeoff or landing at which the runway or the specified Lights or markers delineating it can be seen from a specified point on its centerline at a height corresponding to the average eye level of pilots at touchdown.

23. DECISION HEIGHT (DH).

The DH is height above the runway in an IFR approach at which a missed approach shall be initiated if the required visual references have not been observed. The DH is specified in feet above mean sea level. The DH applies only where an electronic glide slope, such as PAR, ILS, or MLS, provides the electronic reference for descent. The DH shall be established with respect to the obstacle clearance requirements for the approach.

24. OTHER FACTORS.

25. SAFETY.

Visual aids installations shall be designed to provide safety to aircraft and personnel. The configurations of this manual included safety as well as performance in the design. Although exemptions to waivers are permitted for several types of visual aids, the installation of visual aids shall provide the required safety. The safety considerations shall include aircraft departing the full strength pavements or flight paths. These safety considerations should include the following:

a. The height of elevated Lights and equipment shall be kept to a minimum.

b. All elevated Lights and signs near traffic areas shall be mounted on frangible supports and be of frangible construction.

c. Elevated approach Lights shall use frangible or low-impact-resistant supports.

d. The tops of concrete bases and foundations shall be at ground surface level.

e. Concrete bases and foundations within 50 feet of runways and taxiways should be designed to prevent or reduce damage to landing gear and aircraft.

f. Use isolation transformers to keep high voltage of the primary circuit away from light fixtures.

g. Provide safe clearance in the vault around generators and other equipment for maintenance and servicing.

h. Identify and clearly label all electrical cables at all points where they may be available for connections or inspection.

26. MAINTENANCE.

Design visual landing aids for easy access and rapid servicing or replacement when performing maintenance in order to reduce down time for that runway or taxiway. **A complete guide to maintaining airfield equipment can be found in MIL-HDBK 1023/4, Maintenance of Visual Air Navigation Facilities, and MIL-HDBK 1023/5, Maintenance Standards for Visual Air Navigation Facilities (a pocket Field Guide version of MIL-HDBK 1023/4).**

27. EQUIPMENT.

The visual aids equipment designated in the equipment schedule of the individual WP were the approved items

at the time of the manual preparation. If the type of equipment is optional, any approved type may be used; however, to reduce the amount of spares which must be maintained, all fixtures for a particular purpose of a given visual aids installation should be the same.

28. CROSS REFERENCE OF ABBREVIATIONS, SYMBOLS, TERMS.

A list of abbreviations, symbols, and terms is as follows:

Abbreviation	Term
AC	Advisory Circular
ALSF	Approach Lighting System with Sequence Flashing Lights
ALSF-1	Approach Lighting System with Sequence Flashing Lights for Category I Meteorological Conditions
ALSF-2	Approach Lighting System with Sequence Flashing Lights for Category II Meteorological Conditions
ASCC	Air Standardization Coordinating Committee
AWG	American Wire Gauge
CGL	Circling Guidance Light
DH	Decision Height
DM	Design Manual
EAF	**Expeditionary Airfield**
FAA	Federal Aviation Administration
FLOLS	Fresnel Lens Optical Landing System
HDBK	Handbook
HIRL	High-Intensity Runway Edge Lights
IFLOLS	**Improved Fresnel Lens Optical Landing System**
IFR	Instrument Flight Rules
ILS	Instrument Landing System
IMC	Instrument Meteorological Conditions
LSO	Landing Signal Officer
MALS	Medium-intensity Approach Light System
MALSR	Medium-intensity Approach Light System with RAIL
MDA	Minimum Descent Altitude
MLS	Microwave Landing System
MOLS	Mirror Optical Landing System
MOVLAS	Manually Operated Visual Landing Aid System
NATO	North Atlantic Treaty Organization
OLA	Optical Landing Aid
OLS	Optical Landing System
PAPI	Precision Approach Path Indicator
PAR	Precision Approach Radar
RAIL	Runway Alignment Indicator Light
RCL	Runway Centerline Light
RDM	Runway Distance Marker
REIL	Runway End Identification Light
RIL	Runway Identification Light
RRP	Runway Reference Point
RVR	Runway Visual Range
SALS	Short Approach Light System
SFL	Sequence Flashing Light
STANAG	Standards Agreement
TDZL	Touchdown Zone Light
TERPS	Terminal Instrument Procedures
UFC	**Unified Facilties Criteria**
VASI	Visual Approach Slope Indicator
VFR	Visual Flight Rules
VHF	Very High Frequency
VMC	Visual Meteorological Conditions
VOR	VHF Omnidirectional Range
WP	Work Package

Term	Abbreviation
Advisory Circular	AC
Air Standardization Coordinating Committee	ASCC
American Wire Gauge	AWG
Approach Lighting System with Sequence Flashing Lights	ALSF
Approach Lighting System with Sequence Flashing Lights for Category I Meteorological Conditions	ALSF-1
Approach Lighting System with Sequence Flashing Lights for Category II Meteorological Conditions	ALSF-2
Circling Guidance Light	CGL
Decision Height	DH
Design Manual	DM
Expeditionary Airfield	**EAF**
Federal Aviation Administration	FAA
Fresnel Lens Optical Landing System	FLOLS
Handbook	HDBK
High-Intensity Runway Edge Lights	HIRL
Improved Fresnel Lens Optical Landing System	**IFLOLS**
Instrument Flight Rules	IFR
Instrument Landing System	ILS
Instrument Meteorological Conditions	IMC
Landing Signal Officer	LSO
Manually Operated Visual Landing Aid System	MOVLAS
Medium-intensity Approach Light System	MALS
Medium-intensity Approach Light	MALSR

System with RAIL	
Microwave Landing System	MLS
Minimum Descent Altitude	MDA
Mirror Optical Landing System	MOLS
North Atlantic Treaty Organization	NATO
Optical Landing Aid	OLA
Optical Landing System	OLS
Precision Approach Path Indicator	PAPI
Precision Approach Radar	PAR
Runway Alignment Indicator Light	RAIL
Runway Centerline Light	RCL
Runway Distance Marker	RDM
Runway End Identification Light	REIL
Runway Identification Light	RIL
Runway Reference Point	RRP
Runway Visual Range	RVR
Sequence Flashing Light	SFL
Short Approach Light System	SALS
Standards Agreement	STANAG
Terminal Instrument Procedures	TERPS
Touchdown Zone Light	TDZL
Unified Facilities Criteria	**UAF**
Very High Frequency	VHF
VHF Omnidirectional Range	VOR
Visual Approach Slope Indicator	VASI
Visual Flight Rules	VFR
Visual Meteorological Conditions	VMC
Work Package	WP

29. REFERENCE MATERIAL.

The following is a list of the materials referenced in the WP:

Publication Number	Title
Federal Aviation Administration Publications	
Advisory Circulars **may be viewed or downloaded from web site:**	
WWW.FAA.GOV/ARP/150ACS.HTM	
AC 70/7460-1	Obstruction Marking and Lighting
AC 150/5210-5	Painting, Marking and lighting of Vehicles Used on an Airport
AC 150/5340-1	Marking of Paved Areas on Airports
AC 150/5340-28	**Low Visibility Taxiway Lighting Systems**
AC 150/5345-3	Specification for L-821 Panels for Remote Control of Airport Lighting
AC 150/5345-5	Circuit Selector Switch
AC 150/5345-7	Specification for L-824 Underground Electrical Cable for Airport Lighting Circuits
AC 150/5345-10	Specification for Constant Current Regulators and Regulator Monitors
AC 150/5345-12	Specification for Airport and Heliport Beacons
AC 150/5345-13	Specification for L-841 Auxiliary Relay Cabinet Assembly for Pilot Control of Airport Lighting Circuits
AC 150/5345-26	Specification for L-823 Plug and Receptacle, Cable Connectors
AC 150/5345-27	Specifications for Wind Cone Assemblies
AC 150/5345-28	Precision Approach Path Indicator (PAPI) Systems
AC 150/5345-42	Specifications for Airport Light Bases, Transformer Housings, Junction Boxes, and Accessories
AC 150/5345-43	Specification for Obstruction Lighting Equipment
AC 150/5345-44	Specification for Taxiway and Runway Signs
AC 150/5345-45	Lightweight Approach Light Structure
AC 150/5345-46	Specification for Runway and Taxiway Light Fixtures
AC 150/5345-47	Isolation Transformers for Airport Lighting Systems
AC 150/5345-49	Specification L-854, Radio Control Equipment
AC 150/5345-50	Specification for Portable Runway Lights
AC 150/5345-51	Specification for Discharge-Type Flashing Light Equipment
AC 150/5345-52	Generic Visual Glideslope Indicators (GVGI)
AC 150/5345-53	**Airport Lighting Equipment Certification Program (lists sources of qualified equipment)**
AC 150/5370-10	Standards for Specifying Construction of Airports
Federal Aviation Administration Specifications	
FAA-E-982	PAR-56 Lampholder
FAA-E-2159	Runway End Identifier Light System (REIL)
FAA-E-2204	Diesel Engine Generator Sets, 5KW to 300KW
FAA-E-2325	Medium Intensity Approach Lighting System with

	Runway Alignment Indicator Lights (MALSR)
FAA-E-2628	Sequence Flashing Lighting System, Elevated and Semi-Flush with Dimming and Monitoring
FAA-E-2690	Isolation Transformer for High-Intensity Approach Light Systems (1500 Watts)
FAA-E-2702	Low-Impact-Resistant Approach Light Supports
FAA-E-2756	Specification, Four-Box Precision Approach Path Indicator

Federal Publications

Federal Air Regulations

FAR Part 77	Objects Affecting Navigable Airspace
FAR Part 91	General Operating Flight Rules

Federal Specifications

FED W-T-631	Transformer, Power, Distribution
~~FED-TT-P-85~~	~~Paint, Traffic and Airfield Marking, Solvent Base~~
~~FED-TT-P-110~~	~~Paint, Traffic, Black (Nonretroreflective)~~
FED TT-B-1325	Beads (Glass Spheres); Retro-Reflective
FED KKK-A-1872	Ambulance Emergency Medical Care Surface Vehicle
FED TT-P-1952	Paint, Traffic and Airfield Marking, Water Emulsion Base

Federal Standard

FED-STD-595	Colors**, Use in Government Procurement**

International Standard

ICAO Annex 14, Vol. 1, App. 1	Aeronautical Ground Light and Surface Marking Colors

Military Publications

Military Specifications

MIL-L-6273	Light, Navigational, Beacon, Obstacle or Code, G-1
~~MIL-L-7082~~	~~Light, Runway Marker, Elevated, Type M-1~~
MIL-L-7158	Light, Beacon, Rotating, 24-Inch
MIL-P-8944	Panels, Airport Lighting Control, General Specification for
MIL-B-8954	Base and Accessories, Airport Marker Lights, General Specification for
MIL-L-19661	Light, Marker, Portable, Emergency, Battery Operated
MIL-L-26202	Light, Markers, Airport, Semiflush, General Specification for
MIL-L-29575	Light, Wave-off, Flashing, Capacitance-Discharge

Naval Air Systems Command Publications

NAVAIR 51-40ABA-14	Portable Shore-Based Fresnel Lens Optical Landing System MK 8 MODs 0 and 1
NAEC-91-8082 (PAPI)	Navy Precision Approach Path Indicator Certification Requirements
NAEC-91-8071	Certification Test Procedure for Visual Approach Slope Indicator System
NAVAIR 51-40ACA-3	Manually Operated Visual Landing Aids System MK 2 MOD 2
NAVAIR 51-50AAA-4	**Precision Approach Path Indicator (PAPI) Type L-880, Style A, Class II**

Naval Facilities Engineering Command Publications

MIL-HDBK 1023/4	**Maintenance of Visual Air Navigation Facilities ***
MIL-HDBK 1023/5	**Maintenance Standards for Visual Air Navigation Facilities (a pocket Field Guide version of MIL-HDBK 1023/4) ***
NAVFAC P-80.3 Appendix E	Facilities Planning Factors Criteria for Navy and Marine Corps Shore Installations

Chief of Naval Operations Instructions

OPNAV Inst. 3721.1	Air Traffic Control Facilities Manual
OPNAV Inst. 3721.2	
OPNAV Inst. 3722.16	United States Standard for Terminal Instrument Procedures (TERPS)

Unified Facilities Criteria Publication
UFC 3-535-02 Design Drawings for Visual Aid Navigation Facilities *

* Available on the NAVFACENGCOM web site:
http://www.efdlant.navfac.navy.mil/lantops_15/

OPNAV 4790.2D

TECHNICAL PUBLICATIONS DEFICIENCY REPORT

NAVAIRTECHSERVFAC USE ONLY	a. QA SEQUENCE NUMBER	b. DATA MANAGER CODE	c. CFA/PRIME CODE

1. REPORTING ACTIVITY	2. REPORT CONTROL NO.		
	3. REPORT DATE (YRMODA)	4. WEAPONS SYSTEM APPLICATION	5. DISCREPANCY CODE

6. TECHNICAL MANUAL NUMBER	7. TECH. MAN. DATE	8. CHG. NO DATE	9. W/P NO.

10. SEC/PG NO.	11. PARA NO.	12. FIG/TBL NO.	13. CART NO.	14. CART DATE	15. FRAME NO.

16. DEFICIENCY

17. RECOMMENDATION

18. IMPACT

19. MEDIA EVALUATED (ONLY ONE CHECK BLOCK IS REQUIRED PER ITEM)

☐ FILM ☐ PAPER ☐ PAPER & FILM

REMARKS

20. REPORTED BY (NAME, RANK/RATE) AUTOVON	21. RELEASED BY (NAME, RANK/RATE) AUTOVON

OPNAV 4790/66 (Rev. 5-88) S/N 0107-LF-002-440 INSTRUCTIONS ON REVERSE SIDE

Figure 1. Technical Publication Deficiency Report (Sheet 1 of 2)

DRAFT

OPNAV 4790.2D

INSTRUCTIONS

1. FROM: (Reporting Activity) The Reporting Activity will enter complete mailing address.

2. REPORT CONTROL NUMBER: Enter the Report Control Number (RCN).

3. REPORT DATE: This identifies the year, month, and day that the report was prepared, and consists of six digits. The date 15 June 1989 would be presented in the following format: 890615. The first two digits indicating the year (89), the second two digits indicate the month (06), and the remaining two digits specify the day (15).

4. WEAPONS SYSTEM APPLICATION: Give the specific weapons system against which the deficiency is detected.

5. DISCREPANCY CODE: This is a numeric code used to describe the type of discrepancy found in the technical publication being reported deficient. A complete list of codes are as follows:

1. Typographical Errors
2. Incorrect Procedures
3. Schematic Errors
4. Part Number Errors
5. SM&R Code Errors
6. Illustration Errors
7. Incorrect Values/Tolerances
8. Incorrect References
9. Safety (Cautions & Warnings)
10. Indexing Problems
11. Illegible
12. Print Error (Head to Toe or Information Cut Off)
13. Missing/Improperly Collated Pages
14. Film Density
15. Cartridge Loading (Wrong Film, Cartridge Indexing, No Film, and Inverted Loading)
16. Other

6. TECHNICAL MANUAL NUMBER: Give the complete NAVAIR number assigned to the manual being reported as deficient. Only one Technical Manual should be reported per TPDR.

7. TECHNICAL MANUAL DATE: This date appears on the bottom right hand corner of the title page. The date shall be presented in the format described in Item 3.

8. CHANGE NUMBER AND DATE: This appears directly under the basic date of the manual on which the deficiency is located. Present date in same format as Item 3.

9. WORK PACKAGE NUMBER: Enter the number in which the deficiency is located.

10. SECTION/PAGE NUMBER: Enter the number of the page of the technical manual on which the deficiency is located.

11. PARAGRAPH NUMBER: Enter the specific number in which the deficiency is located.

12. FIGURE/TABLE: Enter when an illustration or table is involved in the deficiency.

13. CARTRIDGE NUMBER: Enter the number being reported deficient.

14. CARTRIDGE DATE: The date shall be presented in the format described in Item 3.

15. FRAME NUMBER: Enter the frame number of the cartridge on which the deficiency is located.

16. DEFICIENCY: Be very specific. Provide complete information regarding discrepancy, including drawings, schematics, sketches, and references. If necessary, attach copies.

17. RECOMMENDATION: Be very specific. Provide complete information regarding the corrective action required, including drawings, schematics, sketches, and references. If necessary, attach copies.

18. IMPACT: Enter concise statement of the impact of this discrepancy on work load/operational readiness.

19. MEDIA EVALUATED: Check applicable block for media that is being reported deficient.

20. REPORTED BY: Give name, rate/rank, and autovon number of person reporting deficiency to ensure receipt by reported of notification of action taken.

21. RELEASED BY: Name, rank/rate, title, and autovon number of releasing official.

MAIL ORIGINAL AND 1 COPY TO:

Commanding Officer, Naval Air Technical Services Facility, Quality Assurance
700 Robbins Ave., Philadelphia, Pa

COPY TO COGNIZANT FIELD ACTIVITY

OPNAV 4790/66 (Rev. 5-88) (Back) U.S. GOVERNMENT PRINTING OFFICE: 1989 - 704-010/00914 2-1

Figure 1. Technical Publication Deficiency Report (Sheet 2)

TECHNICAL MANUAL

APPROACH VISUAL AIDS

SHOREBASED AIRFIELDS

Reference Material

Introduction 002 00
~~Definitive Designs for Naval Shorebased Facilities ..... NAVFAC P-272~~
Airfield Identification Marking 003 01
Airport Beacons 003 02
Wind Indicators 003 03
Circling Guidance Lights (CGL) 003 04
Runway End Identification Lights (REIL) 003 05
Approach Lights, Category I - ALSF-1 ..... 003 06
Approach Lights, Category II and Category III - ALSF-2 ..... 003 07
Short Approach Light System (SALS) 003 08
Obstruction Markings 003 09
Obstruction Lighting 003 10
Visual Approach Slope Indicator (VASI) Systems 003 11
Precision Approach Path Indicator (PAPI) Systems 003 12
Optical Landing Aids (OLA) 003 13
Medium-Intensity Approach Light Systems with Runway Alignment Indicator Lights (MALSR) 003 14
~~Airfield Lighting ..... MIL-HDBK-1023/1~~
Design Drawings for Visual Air Navigation Facilities ..... UFC 3-535-02
Terminal Instrument Procedures (TERPS) ..... OPNAV Inst. 3722.16

Alphabetical Index

Subject **Page No.**

Approach Visual Aids Requirements 3
Existing Installations 2
Flight Rules. 2
General — Flight Rules 2
General Information. 2
IFR Categories 2
Instrument Flight Rules (IFR). 2
Purpose. 2
Scope 2
Selection Of Approach Visual Aids. 2
Standardization. 2
Visual Flight Rules (VFR) 2

Record of Applicable Technical Directives

None

1. GENERAL INFORMATION.

2. PURPOSE.

Approach visual aids provide visual cues to the pilot in the transition from navigational flight to the approach zone to touchdown, landing, and ground operations, so that he can perform the maneuver safely and rapidly in varied weather conditions both day and night. The approach aids enhance the pilot's ability to acquire the runway visually and to accurately position the aircraft for landing by furnishing direction and roll guidance as well as distance and approach angle information. The approach visual aids are a continuation of the guidance initially furnished by electronic navigational aids and complete the transition to a safe landing.

3. SCOPE.

This approach aids section of the Technical Manual contains the configuration requirements, applications, equipment, and basic design and installation criteria required for U.S. Navy shore based airfields. The requirements specified in the Work Package(s) (WP) for each visual aid system are to be used for new installations. Existing installation of similar systems may be used and maintained as installed as long as the essential guidance required for the mission is provided. Major modifications and upgrading of existing installations shall comply with the requirements of the applicable WP.

4. STANDARDIZATION.

The requirements of the WP for each visual aid system establishes the standard to be used for most Navy airfields. By combining the WP for all the approach visual aids required for the mission and special characteristics of the airport, standardization of approach visual aids for Navy airfields is attained. Standardization of visual aids on a nation-wide basis is essential to safe and efficient landing operations. When deviations of installations are necessary, these changes shall be authorized in accordance with the approval procedures of WP002 00. In addition to standardization for Navy airfields, similar national and international standards are desirable. To provide national standards, the Navy coordinates with the Air Force, Army, and Federal Aviation Administration (FAA) on the requirements for approach visual aids. The differences in mission, operating procedures, and typed of aircraft result in variations of requirements for some visual aids. Internationally, the Navy coordinates the visual aids requirements with the Air Standardization Coordinating Committee (ASCC) and the Standards Agreements (STANAGs) of the North Atlantic Treaty Organization (NATO).

5. FLIGHT RULES.

6. GENERAL.

The types of approach visual aids required for an airfield depend on the kind of flight operations that will be performed. Flight operations are separated into visual flight rules operations and instrument flight rules operations (WP002 00). Major airfields usually have both types of operations. The approach visual aids associated with the different flight rules are indicated in table 1.

7. VISUAL FLIGHT RULES (VFR).

The minimum meteorological conditions, for which VFR operations are permitted, are weather ceiling height of 1000 feet and visibility of 3 miles. To permit flight operations at the VFR minimums, certain approach and runway visual aids are required. See WP002 00 for the criteria.

8. INSTRUMENT FLIGHT RULES (IFR).

For flight operations in IFR conditions the electronic and visual landing aids must be of types approved for the IFR category approved. The approach light system to be installed shall be designed to meet the most restrictive IFR category required by the operations mission to be used for the runway approach. For a given runway approach, the IFR approach minimums are determined in accordance with the methods used in OPNAV Instruction 3722.16. From this information the authorized approach minimums and the required Runway Visual Range (RVR), Minimum Descent Altitude (MDA), and Decision Height (DH) values are determined.

9. IFR CATEGORIES.

The approach minimums for the ~~F~~IFR categories are found in WP002 00.

10. SELECTION OF APPROACH VISUAL AIDS.

11. The type of approach visual aids required depends on the mission and the approach minimums which may be necessary. Table 1 is a guide for determining the aids to be provided. The design requirements are found in the WP for each type of approach aid. For installation details refer to **UFC 3-535-02**~~MIL-HDBK-1023/1 and NAVFAC P-272~~.

TABLE 1. APPROACH VISUAL AIDS REQUIREMENTS

Visual Aids System	Authorized Operations						
		IFR Category					
	VFR	Non-Prec	I	II	IIIA	IIIB	IIIC
Identification Marking (WP003 01)	C	C	NR	NR	NR	NR	NR
Airport Beacons (WP003 02)	R	R	-	-	-	-	-
Wind Indicators (WP003 03)	OPT	OPT	-	-	-	-	-
Circling Guidance Lights (WP003 04)	RS	RS	NR	NR	NR	NR	NR
REIL (WP003 05)	C	C	-	NR	NR	NR	NR
ALSF-1 (WP003 06) ***(see note)***	NR	NR	NR	NR	NR	NR	NR
ALSF -2 (WP003 07)	NR	RS	NR	R	R	R	R
SALS (WP003 08)	NR	RS	NR	NR	NR	NR	NR
Obstruction Markings (WP003 09)	R	R	-	-	-	-	-
Obstruction Lights (WP003 10)	R	R	R	R	-	-	-
VASI (WP003 11)	~~RS-~~	~~RS-~~	~~RS-~~	-	-	-	-
PAPI (WP003 12)	RS	RS	RS	-	-	-	-
Optical Landing Aid (OLA) (WP003 13)	RS	RS	RS	-	-	-	-
MALSR (WP003 14)	RS	RS	**R-**	-	-	-	-

C - Recommended
R - Required (These visual aids are required for operating in the IFR Category, but other factors may negate approval for installation. See Justification for Installation, WP002 00.)
RS - Required under special conditions. *An example: Only if highspeed exit is installed.
OPT - Option as recommended by air station commander and approved by NAVAIR.
\- - No entries are made where requirements have not been determined or where the system would have limited usefulness under the particular category.
NR - Not Required.

NOTE For CAT I approach systems use MALSR

DRAFT

TECHNICAL MANUAL

AIRFIELD IDENTIFICATION MARKING

SHOREBASED AIRFIELDS

Reference Material

Airport Beacons 003 02
Wind Indicators 003 03
Runway Markings 004 01

Alphabetical Index

Subject **Page No.**

Border Outlines 2
Controls 2
Description 2
Dimensions 2
Existing Installations 1
Floodlighting 2
General Information. 1
Installations 2
Justification Requirements. 2
Location. 2
Materials. 2
Methods Of Installation. 2
Paint 2
Power 2
Purpose. 1
Related Facilities 2

Record of Applicable Technical Directives

None

1. GENERAL INFORMATION.

2. PURPOSE.

This Work Package (WP) contains the requirements for Airfield Identification Marking. These requirements are a guide for developing a suitable marking instead of providing standardization of airfield identification markings. The airfield identification marking is used only if the airfield does not have sufficient means of visual identification for air operations during daylight conditions. These requirements for airfield identification marking apply for new installations. For existing installations, these requirements should be considered for capability of improving identification. If the airfield identification marking is to be installed, the actual design and location should be the responsibility of the airfield authority.

3. JUSTIFICATION REQUIREMENTS.

The justification for installing an airfield identification marking depends on the need for improving identification and the effectiveness that such a marking can provide. Past experience is usually the source indicating the need for improved identification. The local situation must be evaluated to determine if effective improvement in identification is practical.

4. RELATED FACILITIES.

The airfield identification marking serves an independent function for special conditions during daytime operations. Runway marking (WP004 01) may provide some or adequate airfield identification and wind indicators (WP003 03) assist in providing airfield identification. For airfield identification at night, the airport rotating beacon and identification code beacon (WP003 02) provide the airfield identification.

5. DESCRIPTION.

6. The airfield identification marking shall be the name of the airfield located in a prominent position. The marking should ensure maximum visibility from all approach directions. The color should contrast adequately with its background. White or light-colored markings are used for dark backgrounds, and orange or black are effective against light backgrounds. The airfield name may need to face in opposite directions to be legible from different approach directions.

7. LOCATION.

The airfield identification marking shall be located where it will be prominent and most effective. Preferably the site should be on the airfield, but a site near the airfield that is more prominent may be used. The following sites may be considered in selecting the location of this marking.

a. Runways.

b. An embankment on or near the airfield built for this specific purpose provided it is not an obstruction.

c. The roof of a large building or structure such as a hangar on or near the airfield.

d. A water tower or other structure on or near the airfield.

e. Natural terrain features such as a hillside or mesa near the airfield.

8. INSTALLATIONS.

9. METHODS OF INSTALLATION.

The methods of installing an airfield identification marking will vary with the design of the markings and the type of support. Painting is the common means of marking, but sometimes colored stones, plants, or other natural materials may be used. The method of painting shall provide a top quality product for continuous exterior service and provide several years service in the environment. Black borders or outlines of the characters can be used to improve the contrast with the background.

10. DIMENSIONS.

The airfield identification markings should use block type letters and numbers. These characters (figure 1) shall be 10 feet tall minimum. The size of the characters used depends on the distance at which the marking should be readable and the projected height of the marking from the viewing direction.

11. MATERIALS.

The materials required for the airfield identification markings will vary with the design for the particular airfield. The types of materials are optional but must be suitable for the purpose and the environmental conditions. The materials frequently used are:

a. Paint. The paint shall be of high quality, exterior type, suitable for the surfaces to which it will be applied. The color should provide good contrast with the background.

b. Surface. The surface for the characters will depend on the design for the markings. Surfaces for painting may be plywood, sheet metal, roofing, stones, or other materials.

c. Supports. The supports for the marking will vary with the location and design but shall provide stability for several years of service.

d. If the marking is to be floodlighted, commercial type floodlights may be used. The floodlights should have an adequate number of fixtures, properly located and aimed to illuminate the marking uniformly and at an acceptable brightness for reading. The input power for the floodlights may be 120 or 240 volts. The controls may be automatic photoelectric switches or manual switching.

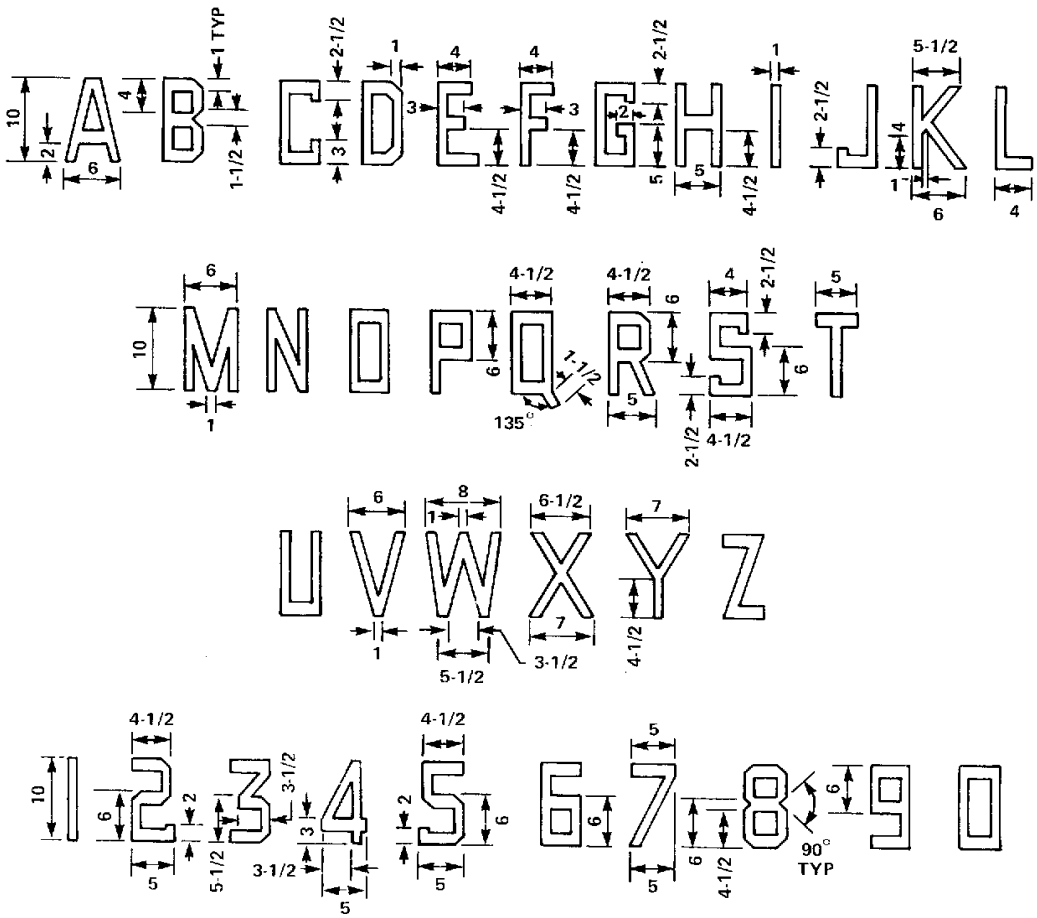

VERTICAL STROKES ARE 1 UNIT WIDE. INCLINED STROKES ARE 1 UNIT WIDE. HORIZONTAL STROKES ARE 1-1/2 UNITS WIDE. NUMBERS SHALL BE 8 UNITS O.C. EXCEPT "1" IN CONJUNCTION WITH "1" TO BE 4-1/2 UNITS O.C. AND "1" IN CONJUNCTION WITH ANY OTHER NUMBER TO BE 6-1/4 UNITS O.C. LETTERS SHALL BE 10 UNITS O.C. EXCEPT "T" OR "I" WITH ANY OTHER LETTER TO BE 8 INITS O.C.

NOTE:

DIMENSIONS FOR NUMBERING AND LETTERING ARE GIVEN IN UNITS PROPORTIONALLY APPLICABLE FOR ANY HEIGHT NUMBER OR LETTER. ALL CHARACTERS SHALL BE 4-1/2 UNITS WIDE UNLESS OTHERWISE INDICATED.

EXAMPLE:

FOR LETTERS OR NUMBERS 50 FT. HIGH, MULTIPLY EACH DIMENSION BY 5.

Figure 1. Characters for airfield identification marking

DRAFT

TECHNICAL MANUAL

AIRPORT BEACONS

SHOREBASED AIRFIELDS

Reference Material

Introduction 002 00
Approach Visual Aids 003 00
Obstruction Lighting 003 10
Runway Visual Aids 004 00
Special Helipad Lights 007 06
Auxiliary Landing Field Lighting and Marking 008 00
Auxiliary Power and Power Transfer Equipment 009 01
Airfield Lighting Control Panels 009 05
Light, Navigational, Beacon, Code, Type G-1 ..... MIL-L-6273
Light, Beacon, Rotating, 24-Inch MIL-L-7158
Aeronautical Ground Light and Surface Marking Colors ..... ICAO, Annex 14, Vol. 1, App. 1

Alphabetical Index

Subject **Page No.**

Aiming 5
Airfield Rotating Beacon. 2
Controls 6
Description 2
Deviations 2
Equipment 5
Existing Installations 2
Fixtures. 5
General Information. 2
Grounding 5
Hazard Or Obstruction Beacon. 2
Heliport Beacon 2
Identification Or Code Beacon 2
Installation Requirements 5
Installations 5
Justification Requirements. 2
Locations. 5
Methods Of Installation. 5
Photometric Requirements. 5
Power And Controls 5
Power. 5
Purpose. 2
Related Facilities 2
Schedule Of Lighting Equipment For Airport Beacons 6

Record of Applicable Technical Directives

None

1. GENERAL INFORMATION.

2. PURPOSE.

This Work Package (WP) contains the requirements for airport beacons. Airport beacons are high-intensity flashing lights which provide a visual signal to pilots to assist in locating and identifying the airfield or a hazardous obstruction at night or in restricted visibility conditions. These beacons may be rotating or fixed but shall provide the signal through 360º of azimuth. Airport beacons with different visual signals are used for the following functions.

a. Airfield rotating beacons.

b. Identification or code beacons.

c. Heliport beacons.

d. Obstruction or hazard beacons.

These requirements are to be used for new installations of airport beacons. Existing installations may continue to be used and maintained, but major replacements or upgrading shall comply with the applicable requirements of this WP.

3. JUSTIFICATION REQUIREMENTS.

Justification for providing each type of airport beacon is as follows:

4. Airfield Rotating Beacon.

Navy airfields authorized for operations at night shall have an airfield rotating beacon, except if two or more airfields are closely located where one beacon serves more than one airfield.

5. Identification Or Code Beacon.

An identification beacon is additionally required if the rotating beacon is more than one mile from the runway or where one rotating beacon serves more than one airfield.

6. Heliport Beacon.

A helipad or heliport intended for operations at night that is not located at an airfield should have a heliport beacon. See WP007 06 for details of heliport beacons.

7. Hazard Or Obstruction Beacon.

Any structure or natural feature on the airfield that is 150 feet or more above the airfield elevation and in some cases objects near the airfield that are 150 feet or more above the ground surface shall be marked with red hazard or obstruction beacons. For details on hazard or obstruction beacons see WP003 10.

8. Deviations.

If deviations from these requirements are necessary, follow the procedures of WP002 00 for obtaining approval.

9. RELATED FACILITIES.

Airfield rotating beacons and identification or code beacons are usually used only for airfields lighted for flight operations at night. Several types of approach and runway lights may be required for a particular airfield. The types of lighting systems that may be used are discussed in WP003 00 for approach lights and WP004 00 for runway lights.

10. DESCRIPTION.

11. AIRFIELD ROTATING BEACON.

Each lighted Navy airfield, except where one rotating beacon serves more than one airfield in close proximity or for auxiliary landing fields (WP008 00), shall use a high-intensity military type beacon. This beacon (figure 1) shall have a double-peaked white beam to denote a military airfield and a single-peaked green beam to indicate that the airfield has lighted facilities for operations at night or in restricted visibility. The two beams shall be directed 180º apart. The signal from the beacon shall be visible through 360º of azimuth by rotating at six revolutions per minute (RPM). The beacon shall automatically change to a new lamp when the operating lamp fails. The airfield rotating beacon shall be operated during twilight and night hours and during daytime when Instrument Flight Rules (IFR) are in effect.

12. IDENTIFICATION OR CODE BEACON.

The identification beacon is used only at airfields where the airfield rotating beacon is located more that 5000 feet from the nearest runway or where the airfield rotating beacon serves more than one airfield. The identification beacon (figure 2) is a nonrotating flashing omnidirectional light visible through 360º. This beacon flashes a green coded signal at approximately 40 flashes per minute. The signal is an assigned code of characters to identify the particular airfield. The identification beacon shall be operated whenever the associated airfield rotating beacon is operated.

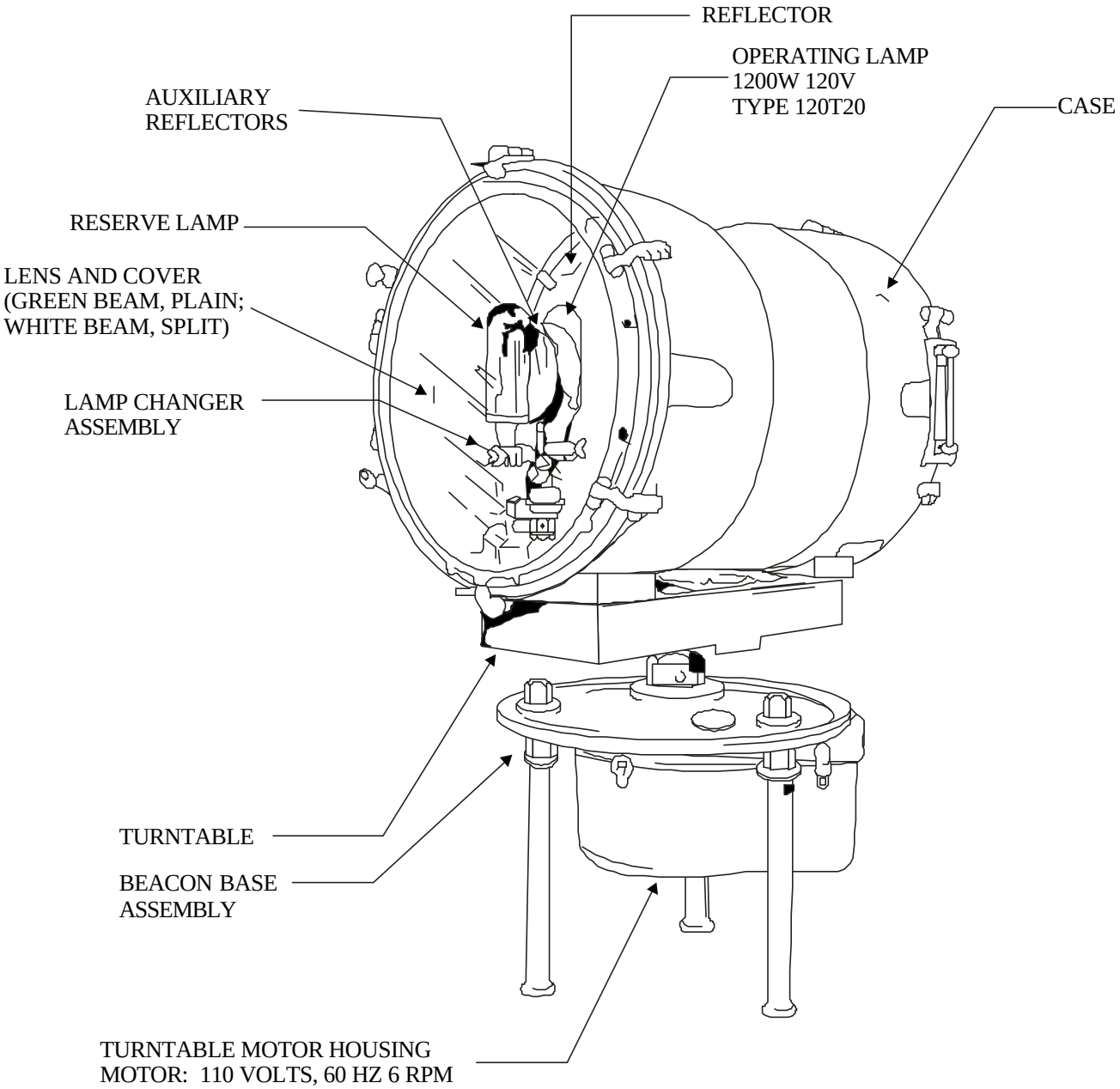

Figure 1. Typical airfield rotating beacon, MIL-L-7158

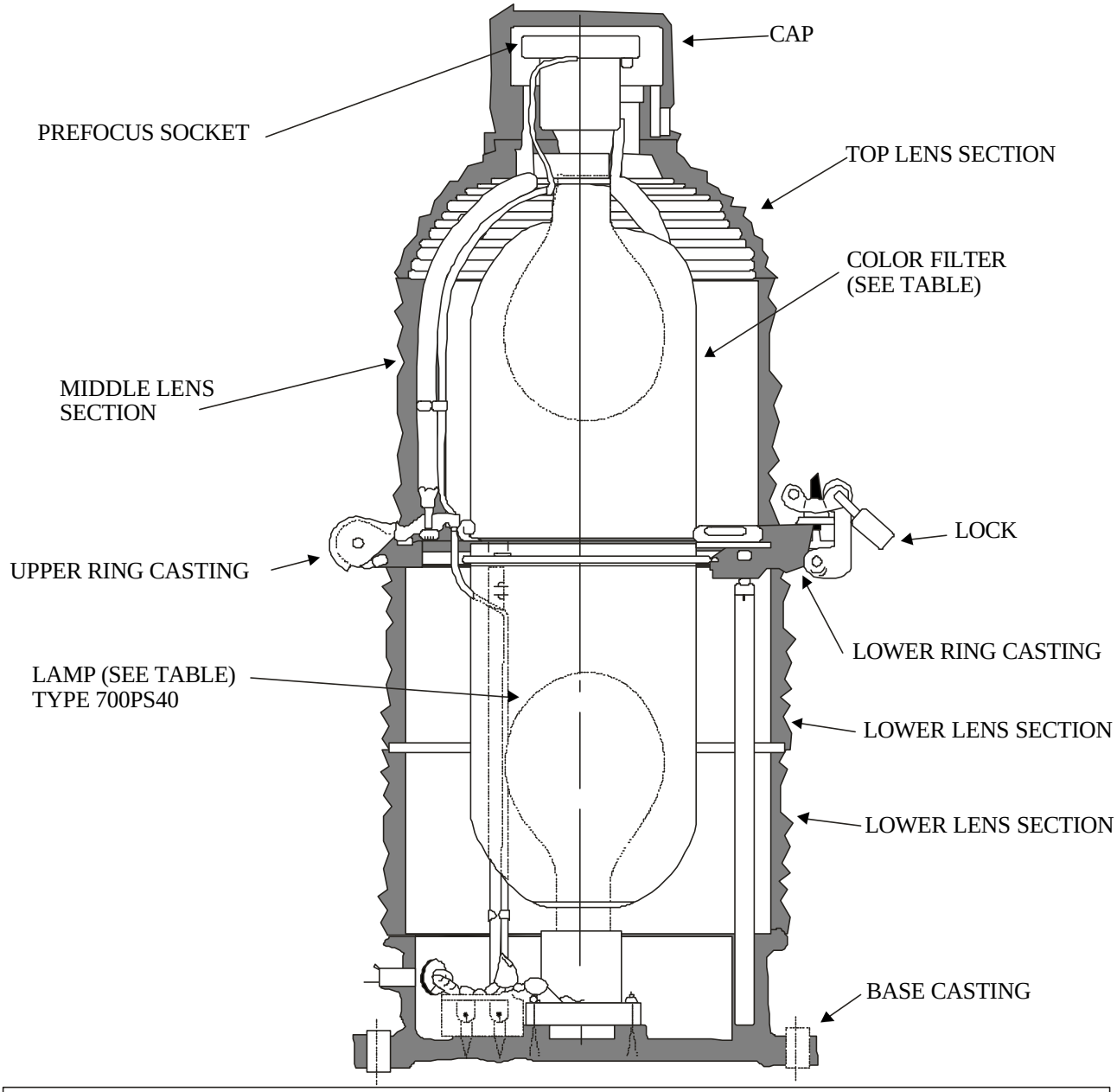

G-1 BEACON - SPECIFICATION MIL-L-6273					
LAMP			FILTER, MIL-L-6273		
NO. REQD.	WATTS	VOLTS	COLOR	NO. REQD.	USE
2	700	120	RED GREEN YELLOW	2 2 2	AS OBSTRUCTION BEACON AS IDENTIFICATION OR CODE BEACON SEADROME IDENTIFICATION BEACON

Figure 2. Typical identification or code beacon, type G-1

13. INSTALLATIONS.

14. INSTALLATION REQUIREMENTS.

General design and installation requirements for airfield beacons are discussed below. For installation details refer to the manufacturer's instructions.

15. METHODS OF INSTALLATION.

These beacons may be mounted on existing structures or separate towers. Typical structures for mounting the beacons are elevated water tanks, hangar roofs, and other existing buildings. The beacons shall be permanently mounted on a stable, level platform. Safe access for maintenance shall be provided. Usually the beacon will be equipped with double obstruction lights. The beacon and its supports should be grounded to reduce damage from lightning.

16. LOCATION.

The standard location for the airfield rotating beacon or the identification beacon shall be:

a. Visible through 360º of azimuth if possible.

b. Not less than 1000 feet from the centerline or centerline extended of the nearest runway.

c. Not in the line of sight from the control tower to the approach zone of any runway or to within 75 feet vertically over any runway.

d. 750 feet or more from the control tower.

e. Not more than 5000 feet from the nearest point of usable landing area, except if surrounding terrain will restrict visibility of the beacon through an appreciable angle in some directions or the beacon will serve more than one airfield. If terrain restricts viewing the beacon, the distance of the beacon from the nearest runway may be increased to not more than two miles.

f. The base is not less than 20 feet higher than the elevation of the floor of the control tower cab.

g. If the airfield rotating beacon is located more than 5000 feet from the nearest point of usable landing area, an identification beacon shall be installed as in paragraphs a through f and not more than 5000 feet from the nearest point of usable landing area.

NOTE: Under certain conditions the beacon may be mounted on the control tower provided. The beacon and its supporting structure must by below the 7:1 transition surface. If atmospheric conditions create glare and flashback in the tower, the beacon must be relocated to satisfy the requirements listed above. This change will only impact new construction and demolition of structures that support rotating beacons. Air stations should be prudent in the selection of the tower mount option so as not to incur the additional cost of having to relocate the beacon if local atmospheric conditions create a glare problem.

17. AIMING.

The vertical aiming of the beacons should be properly focused and aimed when manufactured, and leveling should be all that is required for aiming during installation. The axes of the beams vertically should be approximately five degrees above the horizontal for the rotating beacon. For the identification beacon, the center of the beam shall be approximately three degrees above horizontal.

18. EQUIPMENT.

19. FIXTURES.

The airfield rotating beacon and the identification beacon equipment shall be as shown in table 1 and in figures 1 and 2. The identification beacon shall be provided with a keyer to flash the assigned code.

20. PHOTOMETRIC REQUIREMENTS.

The photometric requirements for the airfield rotating beacon and the identification beacon shall be:

a. Colors. The color of the emitted light shall be in accordance with ICAO, Annex 14, Vol. 1, App. 1.

b. Airfield rotating beacon. With the lenses and the color filters removed and the beacon stationary and operating at rated voltage, the intensity in white light of each beam shall be not less than 1,200,000 candelas for a distribution not less than one degree horizontally and 4.5 degrees vertically.

c. Identification beacon. With the beacon operating steadily (not flashing) at rated voltage, the intensity of the green light shall be not less than 1500 candelas for a distribution through 360 degrees horizontally and 2 degrees vertically. The areas of the beam where the support rods are located may be less than these required intensities.

21. POWER AND CONTROLS.

22. POWER.

The electrical power requirement for the beacons is 120 volts. The source of power may be from the airfield lighting vault or from a local source that is continuously available. If the distance from the power source is long and the line voltage drop is large, transmission of power at a higher voltage and step-down to 120 volts at the site may be desirable. The step-down transformer should be

rated at not less than 3 KVA for the rotating beacon or 2 KVA for the identification beacon. Emergency power is not required for the airport beacons, but should be used if it is available (WP009 01).

23. CONTROLS.

The controls for the airport beacons are only those required to energize and switch off the beacon and its drive motor or keyer. Preferably, these beacons should be controlled remotely from the lighting control panel (WP009 05) in the control tower or the airfield lighting vault. Control may be furnished by an automatic photoelectric switch or a clock-driven timer.

TABLE 1. SCHEDULE OF LIGHTING EQUIPMENT FOR AIRPORT BEACONS

Purpose and Type of Fixture	Lamp Rating and Type	Power Transformer	
		Rating	Type
Airfield rotating beacon. [1/] Light, beacon MIL-L-7158 24-inch, Duplex, Split white and green	1200 W 115 V, [2/] type 1200T20	3KVA, 120V output.	Commercial
Identification or code beacon. [3/] Light, beacon, MIL-L-6273, type G-1, green	700W 120V, [4/]	2KVA, 120V output.	Commercial

[1/] Usually one beacon per airfield but some beacons serve more than one airfield.

[2/] Each beacon has two operating lamps and two spares in the lamp changers.

[3/] Only used if rotating beacon is more than 5000 feet from any runway or if rotating beacon serves more than one airfield.

[4/] Two lamps operating simultaneously for each beacon.

TECHNICAL MANUAL

WIND INDICATORS

SHOREBASED AIRFIELDS

Reference Material

Introduction 002 00
Approach Visual Aids 003 00
Airfield Identification Marking 003 01
Obstruction Lighting 003 10
Runway Visual Aids 004 00
High-Intensity Runway Edge Lights (HIRL) 004 05
Special Helipad Lights 007 06
Auxiliary Landing Field Lighting and Marking 008 00
Auxiliary Power and Power Transfer Equipment 009 01
Special Power Supplies 009 04
Airfield Lighting Control Panels 009 05
Specification for Wind Cone Assemblies ..... FAA AC 150/5345-27

Alphabetical Index

Subject **Page No.**

Controls 3
Description 2
Equipment 3
Existing Installations 2
General Information. 2
Grounding 2
Installation Requirements 2
Installations 2
Justification Requirements. 2
Location. 2
Photometric Requirements. 3
Power And Controls 3
Power. 3
Purpose. 2
Related Facilities 2
Schedule Of Equipment For Wind Indicators 3
Wind Socks 2

Record of Applicable Technical Directives

None

1. GENERAL INFORMATION.

2. PURPOSE.

This Work Package (WP) contains the requirements for visual wind indicators to be used at Navy airfields. The purpose of the wind indicator is to provide visual information of the surface wind direction and general indication of the wind speed to the pilot. This wind information is most useful during takeoff, for orientation to make an approach, and in the final phase of approach prior to touchdown. Wind cones (socks) are the standard wind indicators. These requirements apply for all new installations of wind indicators. Existing installations may continue to be used and maintained. Existing installations may include wind tees or tetrahedrons as well as wind cones. Replacements of wind indicators shall use these requirements.

NOTE

These indicators do not provide the signal for the wind information used and reported by air traffic control.

3. JUSTIFICATION REQUIREMENTS.

Navy airfields shall be provided with one or more wind indicators. The wind indicator is often located at a central position on the airfield. If the runways are long, wind cones should be installed near the thresholds of the runways. One wind cone may serve two runway thresholds to reduce costs and hazards to aircraft. If the runway is authorized for flight operations at night, the wind indicator shall be lighted. Helipads shall be provided with wind cones unless they are located near an existing wind indicator. Approval for deviations from these requirements shall follow the procedures in WP002 00.

4. RELATED FACILITIES.

The use of wind indicators is not directly related to other visual aids. They may be associated with the following visual aids:

a. One may be located at the identification marking (WP003 01) if this marking is located on the airfield.

b. The wind indicator may use the runway edge light circuit (WP004 05) as a source of power for illumination and obstruction lights.

c. The wind indicators shall be lighted if runway visual aids (WP004 00) and approach visual aid (WP003 00) are lighted.

d. These indicators may be used to provide wind information for helipads (WP007 06) and auxiliary landing fields (WP008 00).

5. DESCRIPTION.

The standard wind indicator (figure 2) used for Navy airfields is the 12-foot wind cone and is often called the wind sock. This wind cone is a fabric, truncated cone 12 feet long. The throat, or entrance for air into the cone, shall be 36 inches in diameter to fit over a framework 54 inches long to hold the cone open. The color of the cone may be orange or white and shall provide a good contrast with its background when viewed from an altitude of 1000 feet. The support for the wind vane and illumination and obstruction lights, if used, shall be pivoted for lowering the cone and lights for maintenance. If the airfield or runway has lighting facilities for flight operations at night, the cone shall be illuminated.

6. Eight-Foot Wind Cone.

An 8-foot wind cone (figure 1) may be approved for use on small secondary airfields, helipads, or if necessary to locate the wind indicator closer than standard to the runway. This 8-foot cone has a throat diameter of 18 inches and is rigidly supported for 36 inches. The support may be pivoted for maintenance or of low mass design to reduce damage if inadvertently struck by an aircraft. These wind cones may be lighted for night operations or unlighted if used in daytime only.

7. INSTALLATIONS.

8. INSTALLATION REQUIREMENTS.

General design and installation requirements for wind cones are given below. For installation details refer to the manufacturer's instructions. An obstruction light (WP003 10) shall be provided if the wind cone penetrates any runway clearance surface or is considered a possible hazard to aircraft. The support shall be grounded.

9. LOCATION.

The 12-foot wind cone should be located as follows:

a. Near the runway threshold not less than 400 feet from the runway centerline.

b. Preferably between 500 feet and 1500 feet down the runway from the threshold.

c. In an area free from the effects of local air disturbance. This may require clearing of brush and vegetation.

d. One wind cone may serve the ends of two runways if the distance from either runway centerline is not more than 1000 feet. Eight-foot wind cones, if approved for use at small secondary airfields or near the runway, should be installed as follows:

e. At a central site for small airfields without lights.

DRAFT

f. Not less than 150 feet from the runway edge where clearance space or wind disturbances are not suitable for the 12-foot wind cone. If the wind cone is less than 300 feet from the runway edge, the support shall be low-mass or light-weight type.

10. EQUIPMENT.

The wind indicator equipment shall be as shown in table 1 and for typical installation refer to figures 1 and 2.

11. PHOTOMETRIC REQUIREMENTS.

If lighted, the illumination of a surface in a horizontal plane with a radius not less than the length of the fully extended wind sock at the elevation of the top of the cone shall be not less than two foot-candles. The obstruction lights shall meet the requirements for steady-burning red obstruction lights (WP003 10).

12. POWER AND CONTROLS.

13. POWER.

The electrical power required for the wind indicators is only for the illumination lights and the obstruction lights if required. This power shall be 120 volts and not more than 1000 VA. Emergency power is not required for wind indicators, but it is desirable if it is available (WP009 01). The sources for this power may be from the airfield lighting vault, a local source of continuous power, or for runway ends from the runway edge light circuit (WP004 05). If power is provided by the runway edge light circuit, a series circuit to 120 volt power adapter (WP009 04) that will not reduce the illumination on the wind cone to less than 50 percent of full intensity for any intensity setting is required.

14. CONTROLS.

The only controls required are for switching the wind indicators lights ON and OFF. For power sources from the lighting vault or local sources, the preferred arrangement is for remote control at the lighting control panel (WP009 05) in the control tower and alternate control at the airfield lighting vault. If remote control for power from local sources is not practical, the switching can be provided by photoelectric switches or time clocks. If power is obtained from the runway edge lights, the wind indicator lights are controlled with the runway lights.

TABLE 1. SCHEDULE OF EQUIPMENT FOR WIND INDICATORS

Purpose and Type of Fixture	Lamp Rating and Type	Power Transformer		
		Rating	Type	Adapter
12-foot wind cone. [1/] FAA AC 150/5345-27, type L-807, style I or II, size 2	(4) 200W 120V, type 200 PS 30/45	120V output 1000VA if needed	Commercial	If on series circuit, 20A or 6.6A/120V, 1000VA
8-foot wind cone. [1/] FAA AC 150/5345-27, type L-806, style I or II, size 1	(4) 150W 120V type 150 PS25	120V output 1000VA	Commercial	If on series circuit, 20A or 6.6A/120V, 1000VA

[1/] The number of wind cones varies with the size and configuration of the airfield.

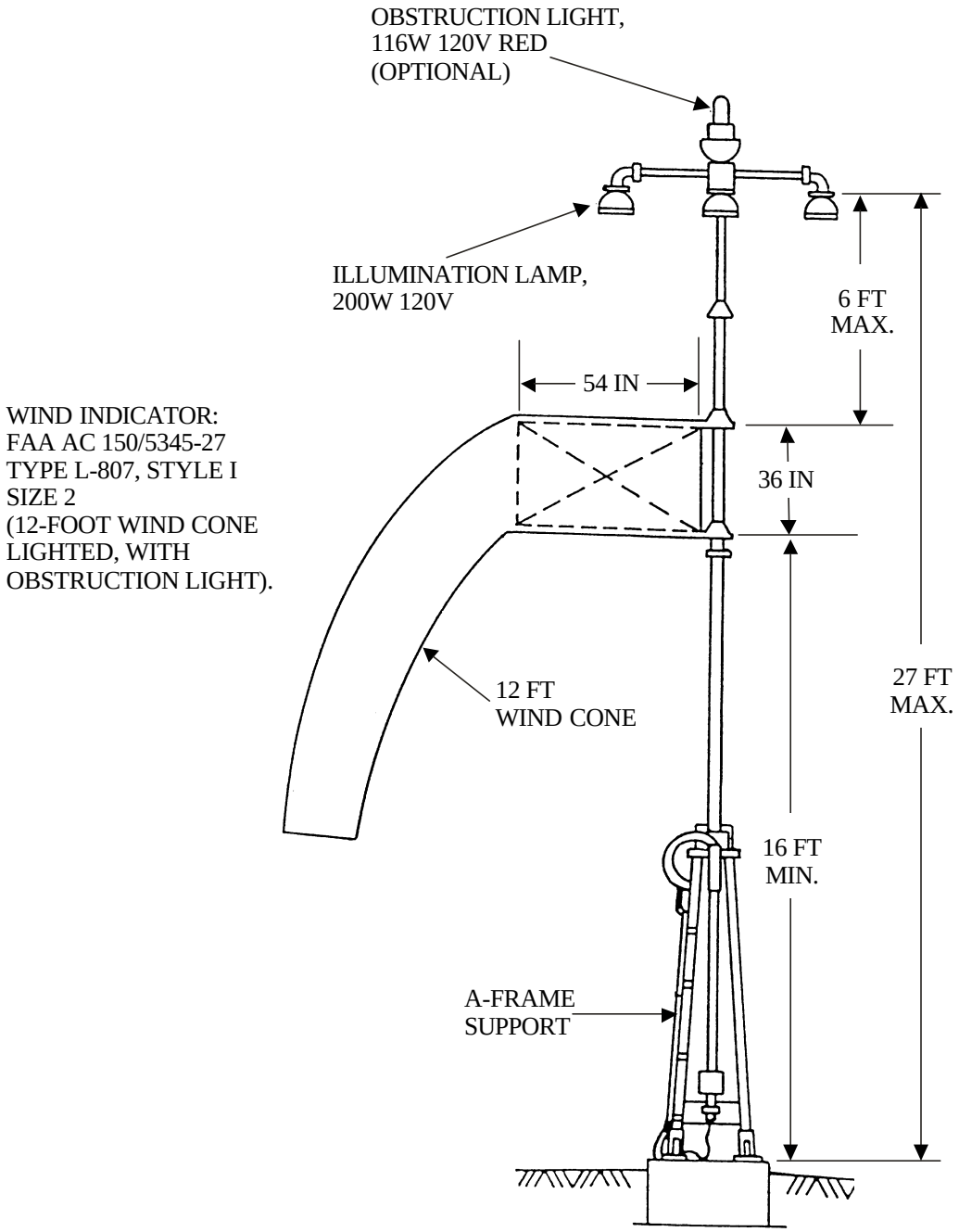

Figure 1. Typical Wind Indicator, 12-foot, type L-807

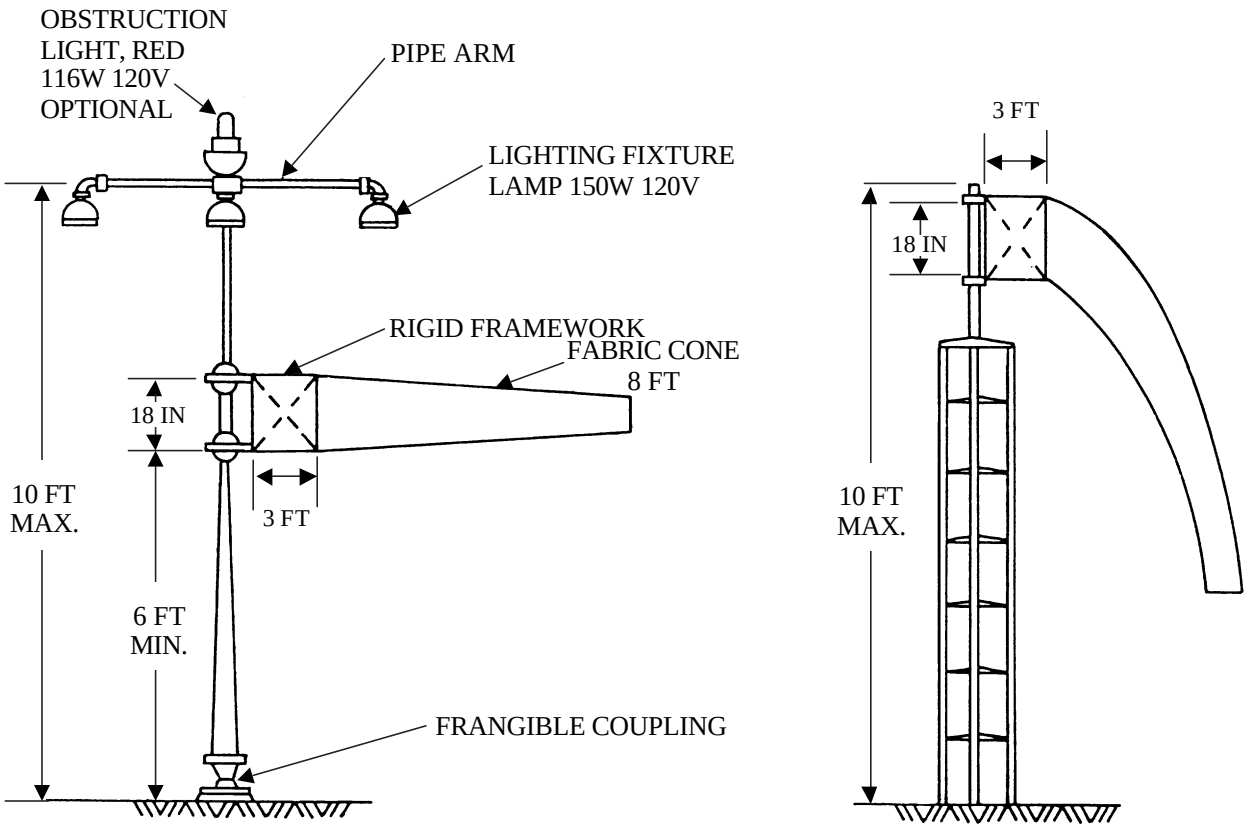

A. WIND INDICATOR
8 FT WIND CONE
LIGHTED
LOW-MASS DESIGN
STRUCTURE
FAA AC 150/5345-27
TYPE L-806 STYLE I
SIZE 1

B. WIND INDICATOR
8 FT WIND CONE
UNLIGHTED
LIGHTWEIGHT
STRUCTURE
FAA AC 150/5345-27
TYPE L-806 STYLE II
SIZE 1

(DIMENSIONS ARE FOR REFERENCE ONLY)

Figure 2. Typical wind indicators, 8-foot wind cones, type L-806

DRAFT

TECHNICAL MANUAL

CIRCLING GUIDANCE LIGHTS (CGL)

SHOREBASED AIRFIELDS

(NO LONGER USED – Runway edge lights provide adequate guidance)

~~Reference Material~~

~~Definitive Designs for Naval Shore Facilities.....NAVFAC P-272~~
~~Introduction.....002 00~~
~~Runway End Identification Lights (REIL).....003 05~~
~~Runway Threshold Lights.....004 02~~
~~High Intensity Runway Edge Lights (HIRL).....004 05~~
~~Runway Distance Markers (RDM).....004 09~~
~~Electrical Power and Control for Visual Aids.....009 00~~
~~Constant Current Regulators.....009 02~~
~~Airfield Lighting.....MIL-HDBK-1023/1~~
~~Circling Guidance Light, Specification.....MIL-L-22252~~
~~Aeronautical Ground Light and Surface Marking Colors.....ICAO, Annex 14, Vol. 1, App. 1~~
~~Isolation Transformer for Airport Lighting.....FAA AC 150/5345-47~~

~~Alphabetical Index~~

~~Subject~~ ~~Page No.~~

~~Controls.....5~~
~~Description.....2~~
~~Dimensions.....2~~
~~Equipment.....2~~
~~Existing Installations.....2~~
~~General Information.....2~~
~~Installation Requirements.....2~~
~~Installations.....2~~
~~Justification Requirements.....2~~
~~Light Intensity and Distribution Requirements.....5~~
~~Location and Dimensions.....2~~
~~Methods of Installation.....2~~
~~Photometric Requirements.....5~~
~~Power and Control.....5~~
~~Power.....5~~
~~Purpose.....2~~
~~Related Facilities.....2~~
~~Schedule of Lighting Equipment for CGL.....4~~
~~Tolerances.....2~~

~~Record of Applicable Technical Directives~~

~~None~~

~~1.GENERAL INFORMATION.~~

~~2.PURPOSE.~~

~~This Work Package (WP) contains the requirements for the Circling Guidance Lights (CGL). The purpose of the CGL is to enable the pilot to locate the runway from a distance and to provide visual guidance when flying the traffic pattern. The CGL provides visual cues for location of the runway and distance and alignment information for the downwind leg of the traffic pattern. These requirements apply for new installations. Existing installations shall be maintained unless changes in the approach procedures or runway edge lights indicate that CGL are no longer needed. Circling approach patterns are used for Visual Flight Rules (VFR) operations and some nonprecision Instrument Flight Rules (IFR) approaches (WP002 00). These lights are required only for operations at night. If the runway edge lights and other lights provide satisfactory guidance, CGL are not required.~~

~~3.JUSTIFICATION REQUIREMENTS.~~

~~The CGL shall be installed only on lighted runways which have procedures for circling approaches and where visual guidance from the runway edge lights is unsatisfactory. Some conditions for which CGL may be especially helpful are as follows:~~

~~a.Where runway edge lights are mostly semiflush lights.~~

~~b.If the type of runway edge lights emits low intensity away from the runway.~~

~~c.Where special meteorological conditions exist such as frequent shallow ground fog.~~

~~d.Where the downwind leg of the traffic pattern is distant from the runway.~~

~~4.RELATED FACILITIES.~~

~~The CGL shall be used only for lighted runways which have procedures for circling approaches. The runway threshold lights (WP004 02) and Runway End Identifier Lights (REIL) (WP003 05) may provide visual cues for turning onto the base leg, and the runway edge lights (WP004 05) provide guidance for the final approach.~~

~~5.DESCRIPTION.~~

~~6. The CGL shall consist of two straight lines of white steady burning lights with one line on each side of the runway (figure 1). For parallel runways with centerlines not more than 3000 feet apart, the lines of CGL may be along the outer edges of the parallel set of runways. The lights for the CGL shall be elevated, bidirectional lights with the axes of the beams toed out approximately 20 degrees from the runway.~~

~~7.INSTALLATIONS.~~

~~8.INSTALLATION REQUIREMENTS.~~

~~For installation details of CGL refer to MIL-HDBK-1023/1 and NAVFAC P-272. General design and installation requirements are given below.~~

~~9.METHODS OF INSTALLATION.~~

~~The elevated CGL fixtures may be installed on marker bases or conduit in concrete foundations and shall be mounted on frangible couplings.~~

~~10.LOCATION AND DIMENSIONS.~~

~~(See figure 1.) The CGL shall be in straight lines parallel to the runway centerline. For single runways, a line of lights shall be located near each edge of the runway. For parallel runways, the lights may be near the outer edges of the set of runways. The lines of lights shall be not less than 50 feet and not more than 75 feet from the runway edge. The lights shall be spaced 1000 ±100 feet apart with the first (end) lights not less than 1000 feet from the runway ends. If the runway length is not an exact multiple of 1000 feet, the extra distance is equally divided into two parts and added to the distance of the first lights from the runway ends. As an example, if the runway length is 6500 feet, the extra 500 feet adds 250 feet for a total of 1250 feet as the distance the first lights are from the runway ends. This method of adjusting for odd runway lengths permits spacing of all lights at 1000-foot intervals. If runway distance markers (WP004 09) are installed near the CGL, the CGL shall be not less than 10 feet farther from the runway edge than the runway distance markers. The CGL fixtures shall be mounted on frangible couplings at a height not more than 36 inches above the surface of the runway shoulder. The CGL fixtures shall be oriented horizontally with the direction arrow (0 degrees azimuth) towards and perpendicular to the runway centerline with a tolerance of ±3 degrees. The vertical alignment is fixed and only requires the reference plane of the fixture to be level.~~

~~11.EQUIPMENT.~~

~~The lighting equipment required for CGL installation is given in table 1 and shown in figure 2.~~

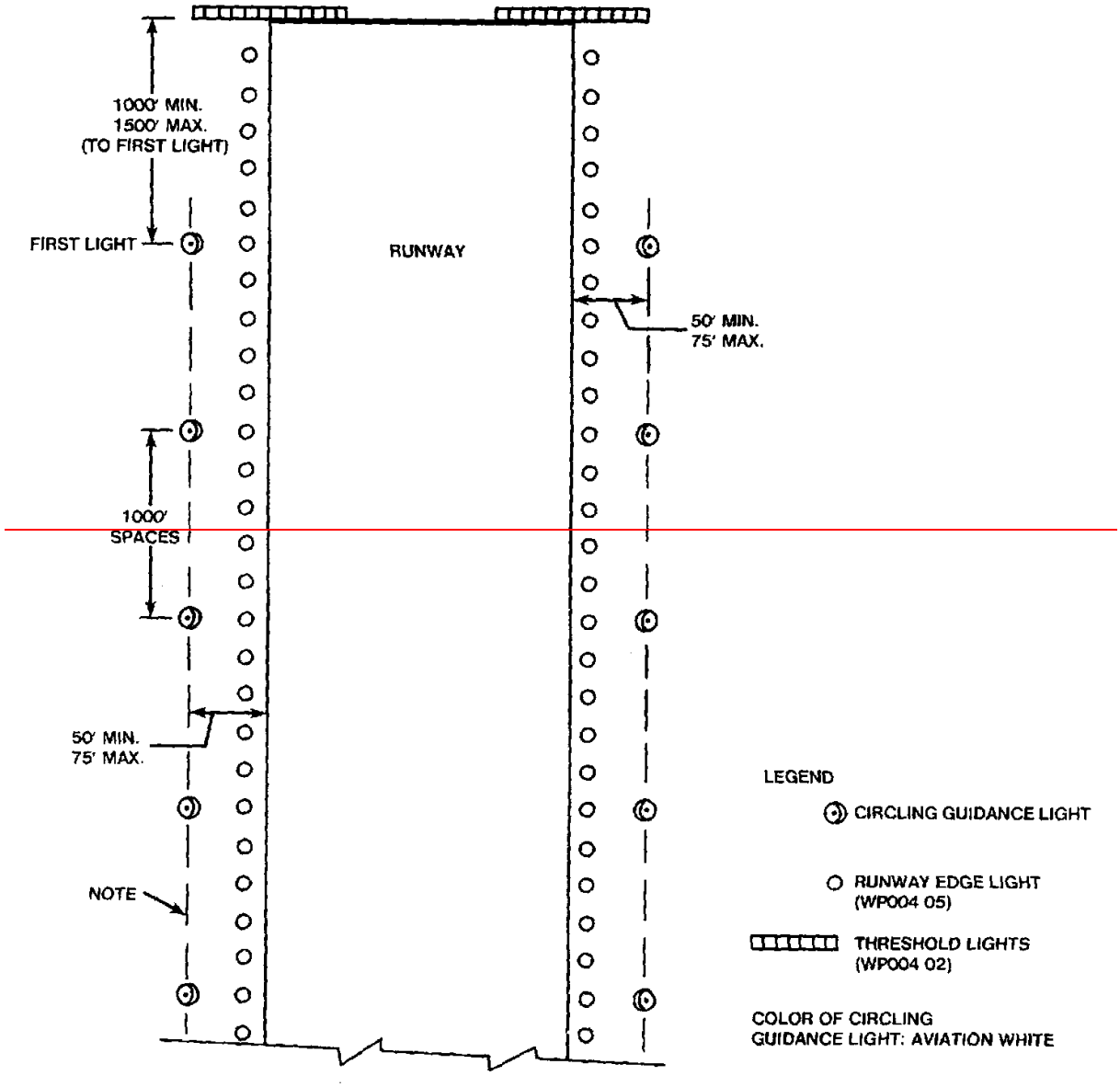

~~NOTE: TOLERANCE OF LIGHTS FROM THIS LINE - 2 FEET~~

~~Figure 1. Plan for installation of circling guidance lights (CGL)~~

~~TABLE 1. SCHEDULE OF LIGHTING EQUIPMENT FOR CGL[1/]~~

~~Type of Fixture~~	~~Lamp Rating and Type~~	~~Isolation Transformer~~	
		~~Rating~~	~~FAA Type AC150/5345-47~~
~~Elevated lights.[1/]~~			
~~MIL-L-22252~~	~~503W 20A, 20A/T20/3~~	~~500W 6.6/20A or 500W 0/20A~~	~~L-830-12 L-830-13~~

~~[1/] Number of lights required varies with the runway length.~~

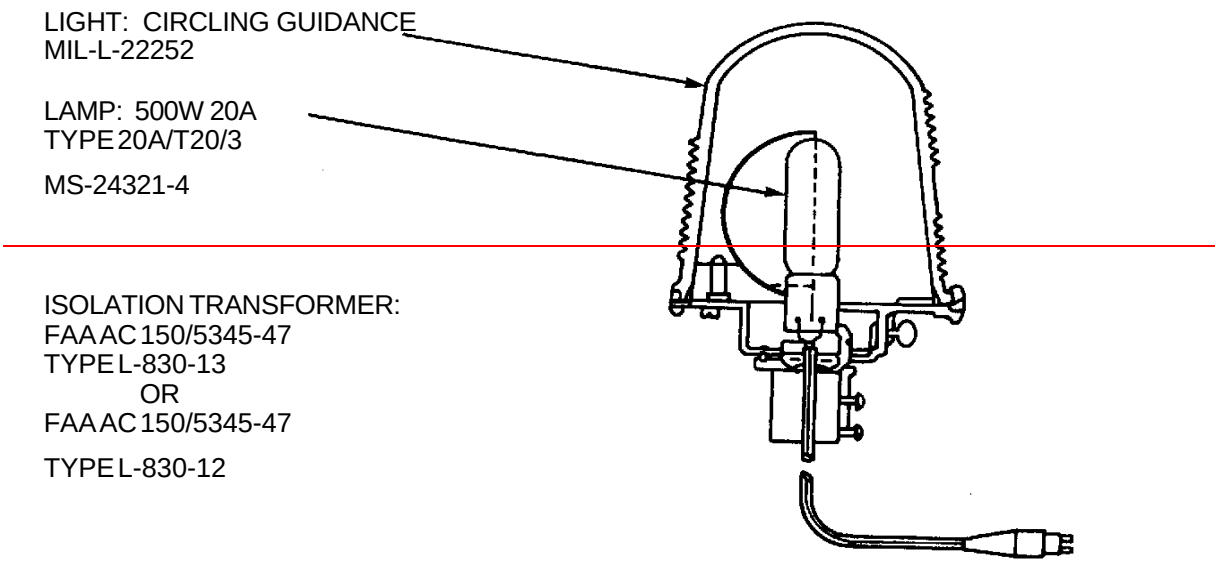

~~Figure 2. Typical circling guidance light (CGL)~~

~~12.PHOTOMETRIC REQUIREMENTS.~~

~~The emitted light shall be bidirectional with the axes of the beams nearly parallel to the runway but toed out 20 degrees. The axes of the beams shall be 5 degrees above horizontal. The color of the emitted light shall be aviation white in accordance with ICAO, Annex 14, Vol. 1, App. 1. The horizontal orientation of the lights shall be with 0 degrees of azimuth toward and perpendicular to the runway centerline. The tolerance for distribution of light shall be ±1 degree. The intensity and beamspread requirements shall be as indicated in table 2.~~

~~13.POWER AND CONTROL.~~

~~14.POWER.~~

~~The electrical power for the CGL shall be provided by a series circuit (WP009 00) and constant current regulator (WP009 02) of suitable current and kilowatt rating. Preferably the CGL power shall be provided by a separate circuit and regulator with 3 or more intensity steps, but they may be connected to the runway edge light circuit (WP004 05). Emergency power and automatic power transfer is not required for CGL, but should be used if available.~~

~~15.CONTROLS.~~

~~The primary control for the CGL is manually switched ON and OFF from the air traffic control tower. An alternate control station should be in the field lighting vault. This control may be combined with the energizing controls for the runway edge lights. Preferable the CGL shall be provided with 3 intensity steps which shall be separate from the runway edge light intensity control. The minimum intensity shall be not less than four percent of rated intensity. The CGL should be operated at all times when the runway edge lights are operated at intensity steps 1, 2, or 3. The CGL may be switched OFF for precision IFR conditions.~~

~~TABLE 2. LIGHT INTENSITY AND DISTRIBUTION REQUIREMENTS~~

~~Elevation Angle (degrees)~~	~~Horizontal Angle (degrees)~~	~~Intensity (candelas)~~
~~Light emitted outboard of the runway, minimum intensity.~~		
~~2 to 8~~	~~100 to 200~~	~~6,000~~
~~2 to 8~~	~~240 to 260~~	~~6,000~~
~~2 to 8~~	~~120 to 240~~	~~4,000~~
~~2 to 8~~	~~95 to 100~~	~~2,000~~
~~2 to 8~~	~~260 to 265~~	~~2,000~~
~~0 to 2 and 8 to 12~~	~~100 to 120~~	~~4,000~~
~~0 to 2 and 8 to 12~~	~~240 to 260~~	~~4,000~~
~~0 to 2 and 8 to 12~~	~~120 to 240~~	~~2,000~~
~~0 to 2 and 8 to 12~~	~~95 to 100~~	~~1,000~~
~~0 to 2 and 8 to 12~~	~~260 to 265~~	~~1,000~~
~~12 to 20~~	~~95 to 265~~	~~400~~
~~20 to 60~~	~~95 to 265~~	~~100~~
~~All other directions above horizontal.~~		~~10~~
~~Light emitted towards the runway, maximum intensity.~~		
~~0 to 30~~	~~300 to 60~~	~~100~~
~~0 to 30~~	~~280 to 300~~	~~200~~
~~0 to 30~~	~~60 to 80~~	~~200~~
~~0 to 30~~	~~270 to 280~~	~~500~~
~~0 to 30~~	~~80 to 90~~	~~500~~

DRAFT

TECHNICAL MANUAL

RUNWAY END IDENTIFICATION LIGHTS (REIL)

SHOREBASED AIRFIELDS

Reference Material

Introduction 002 00
~~Definitive Designs for Naval Shore Facilities ..... NAVFAC P-272~~
Approach Visual Aids 003 00
Visual Approach Slope Indicator (VASI) Systems 003 11
Precision Approach Path Indicator (PAPI) Systems 003 12
Runway Markings 004 01
Runway Threshold Lights 004 02
Displaced Threshold Lights and Markings 004 03
High-Intensity Runway Edge Lights (HIRL) 004 05
Auxiliary Power and Power Transfer Equipment 009 01
Special Power Supplies 009 04
Airfield Lighting Control Panels 009 05
~~Airfield Lighting ..... MIL-HDBK-1023/1~~
Design Drawings for Visual Air Navigation Facilities ..... UFC 3-535-02
Runway End Identifier Light System (REIL) FAA-E-2159
Specification for Discharge-Type Flashing Light Equipment ..... FAA AC 150/5345-51

Alphabetical Index

Subject **Page No.**

Aiming 2
Controls 6
Description 2
Effective Intensity 4
Equipment 4
Existing Installations 2
General Information. 2
Installation Requirements 2
Installations 2
Justification Requirements. 2
Locations. 2
Photometric Requirements. 4
Power And Controls 6
Power. 6
Purpose. 2
Related Facilities 2
Schedule Of Lighting Equipment For REIL 4
Series-Circuit Power Adapter 6

Record of Applicable Technical Directives

None

1. GENERAL INFORMATION.

2. PURPOSE.

This Work Package (WP) contains the requirements for the Runway End Identifier Lights (REIL) consisting of two flashing lights, one on each side of the runway, at the runway threshold. The purpose of the REIL is to provide the pilot with rapid and positive identification of the runway threshold during an approach for landing. The REIL assists the pilot in making landings in Visual Flight Rules (VFR) conditions and in non-precision instrument approaches in Instrument Flight Rules (IFR) conditions (WP002 00 and WP003 00). These requirements are to be used for new installations of REIL. The existing installations of REIL or Runway Identification Lights (RIL) may continue to be used and maintained, but replacement or upgrading of either type of light shall require a new REIL installation.

3. JUSTIFICATION REQUIREMENTS.

The REIL is not considered a precision approach aid. Approaches to runways provided with approach lights usually are not provided with the REIL, but the runway threshold for approaches from the opposite direction may need the REIL. The approval for an installation or for deviations from these requirements shall follow the procedures of WP002 00.

4. RELATED FACILITIES.

The following airfield visual aids are required with the use of the REIL:

a. High-Intensity Runway Edge Lights (HIRL) (WP004 05),

b. Runway threshold lights (WP004 02) or displaced threshold lights (WP004 03),

c. Runway Markings (WP004 01).

The Visual Approach Slope Indicator (VASI) system (WP003 11) or Precision Approach Path Indicator (PAPI) system (WP003 12) may be an associated visual aid.

5. DESCRIPTION.

6. The REIL consists of two flashing light fixtures (strobe lights), one located on each side of the runway threshold. The REIL lights are usually unidirectional but omnidirectional lights may be used for special operational conditions. These lights flash simultaneously. The REIL shall have a minimum of three intensity settings. There should be provisions for shielding the light to prevent objectionable glare. Each light fixture may have a power unit but the light (flasher head) shall be capable of separation from the power unit. One light fixture, which controls the time of flashing, is called the master light and the other is the slave light.

7. INSTALLATIONS.

8. INSTALLATION REQUIREMENTS.

For details on installing the REIL refer to ~~MIL-HDBK-1023/1 and NAVFAC P-272~~**UFC 3-535-02**. General design and installation requirements are discussed below.

9. LOCATIONS.

The optimum location of the lights shall be 40 feet from the runway edge and in line with the existing runway threshold lights. The light units may be located laterally up to 75 feet from the runway edge and longitudinally 40 feet downwind or 90 feet upwind from the runway threshold (figure 1). When possible, the two light units shall be equidistant from the runway centerline. When location adjustments are necessary, the difference in the distance of the two lights to the centerline shall not exceed 10 feet. Each light unit shall be a minimum of 40 feet from the edge of taxiways and runways. The elevation of both units shall be within 3 feet of a horizontal plane through the runway centerline, with the maximum height above ground limited to 3 feet. When the centerline elevation varies, the centerline point in line with the two units shall be used to measure the centerline elevation. Both light units shall be within 10 feet of a line perpendicular to the runway centerline. Orient the beam axis of an unbaffled unit 15 degrees outward from a line parallel to the runway and inclined at an angle 10 degrees above the horizontal. If this standard setting is operationally objectionable, provide optical baffles and orient the beam axis of the unit 10 degrees outward from a line parallel to the runway centerline and inclined at an angle of 3 degrees above the horizontal. Details pertaining to baffles are contained in Specification L-849 (table 1). The REILs emit white light and have no intensity control.

~~The preferred location for the REIL is for the flasher heads (lights) to be symmetrical about the runway centerline, in line with the line of threshold lights, and 50 feet outboard from the runway edge (figure 1). The lateral distance may be between 50 feet and 75 feet from the runway edge but not less than 10 feet from the outermost threshold lights. Both flasher heads shall be at the same elevation and not more than 54 inches above or below the elevation of the crown of the runway at the~~

DRAFT

~~threshold. The elevation of the power unit shall be not more than 54 inches above the crown of the runway. The flasher head or power unit shall be not less than 50 feet from the edge of any runway or taxiway. If necessary, the flasher heads and power units may be located not more than 50 feet ahead of the line of threshold lights. The power adapter for connecting the REIL to the HIRL circuit, if used, may be placed at any convenient position with the required clearances but often is located up to 10 feet further from the runway edge than the master power unit.~~

10. AIMING.

The preferred aiming of the REIL flasher heads (lights) is for the axes of the beams of the unidirectional lights to be away from the extended runway centerline at 15 degrees from a line through the light parallel to the runway centerline. Vertically, the beam axes should be aimed 10 degrees above horizontal. The omnidirectional lights have fixed vertical aiming and are leveled on the support. If glare is objectionable for the unidirectional lights, the horizontal and vertical aiming may be adjusted. The horizontal aiming of the beam axis shall be not less than 10 degrees nor more than 20 degrees outward from the line parallel to the runway centerline. Shielding or baffling should not be utilized unless flight inspection findings, complaints of dangerous glare, or environmental impact require this method of correction.

NOTES

1. THE OPTIMUM LOCATION FOR EACH LIGHT UNIT IS IN LINE WITH THE RUNWAY THRESHOLD AT 40 FT FROM THE RUNWAY EDGE.
2. A 90 FT UPWIND AND A 40 FT DOWNWIND LONGITUDINAL TOLERANCE IS PERMITTED FROM THE RUNWAY THRESHOLD IN LOCATING THE LIGHT UNITS.
3. THE LIGHT UNITS SHALL BE EQUALLY SPACED FROM THE RUNWAY CENTERLINE. WHEN ADJUSTMENTS ARE NECESSARY THE DIFFERENCE IN THE DISTANCE OF THE UNITS FROM THE RUNWAY CENTERLINE SHALL NOT EXCEED 10 FT.
4. THE BEAM CENTERLINE (AIMING ANGLE) OF EACH LIGHT UNIT IS AIMED 15 DEGREES OUTWARD FROM A LINE PARALLEL TO THE RUNWAY CENTERLINE AND INCLINED AT AN ANGLE 10 DEGREES ABOVE THE HORIZONTAL. IF ANGLE ADJUSTMENTS ARE NECESSARY, PROVIDE AN OPTICAL BAFFLE AND CHANGE THE ANGLES TO 10 DEGREES HORIZONTAL AND 20 DEGREES VERTICAL.
5. LOCATE THE ADL EQUIPMENT A MINIMUM DISTANCE OF 40 FT FROM OTHER RUNWAYS AND TAXIWAYS.
6. IF REILS ARE USED WITH VASI OR PAPI-2, INSTALL REILS AT 75 FT FROM THE RUNWAY EDGE. WHEN INSTALLED WITH OTHER FACILITIES REILS SHALL BE I NSTALLED AT 40 FT FROM THE RUNWAY EDGE.
7. THE ELEVATION OF BOTH UNITS SHALL BE WITHIN 3 FT OF THE HORIZONTAL PLANE THROUGH THE RUNWAY CENTERLINE.

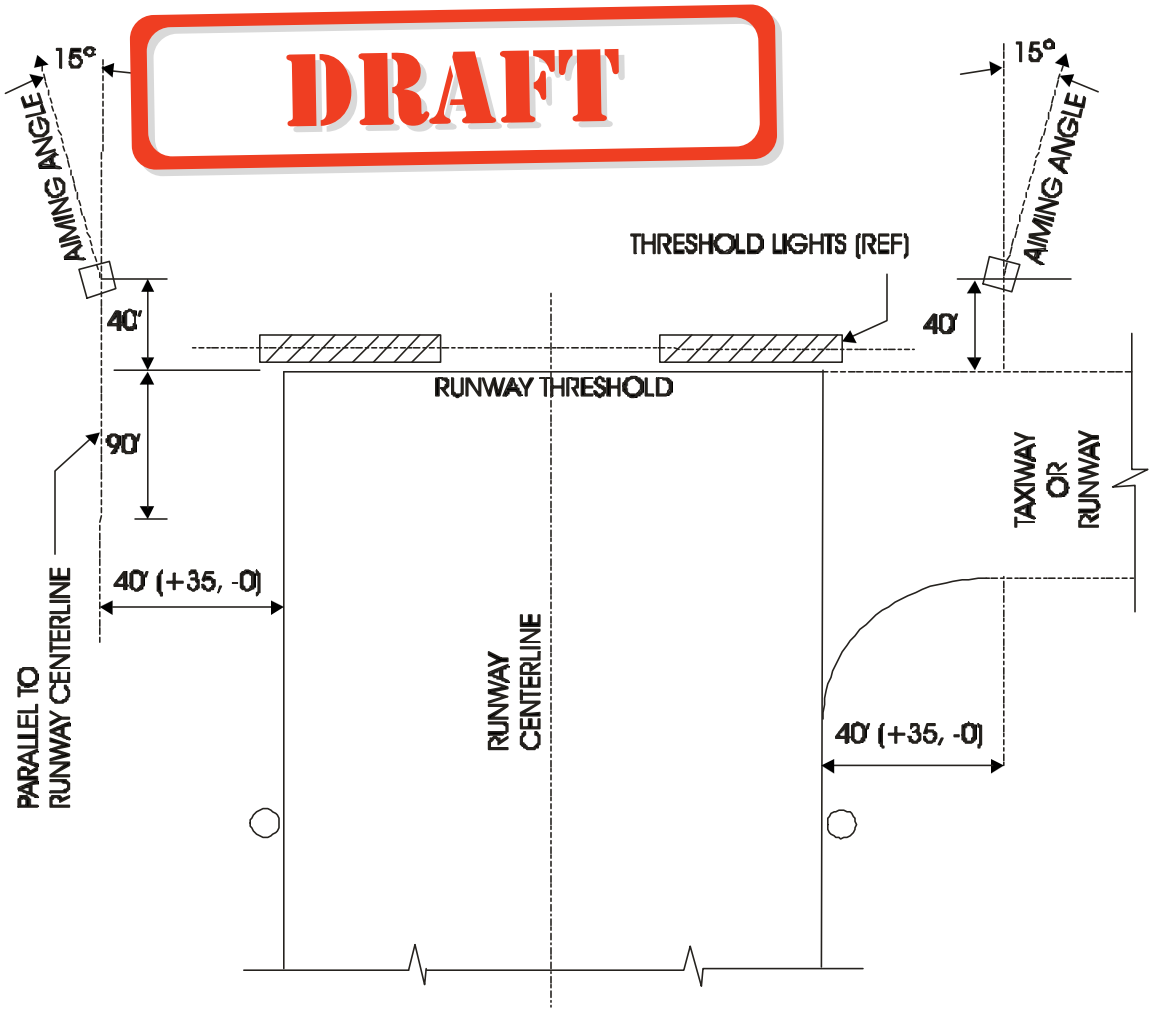

Figure 1. Configuration of REIL installation

11. EQUIPMENT.

The REIL equipment shall be as given in table 1 and shown in figure 2. The lights, power units, and power adapters, if used and elevated, shall be mounted on frangible couplings. External, separate light shields or baffles may be installed, if required.

12. PHOTOMETRIC REQUIREMENTS.

The color of the REIL flashing lights shall be white or bluish-white of xenon-discharge lights. These unidirectional strobe lights at the rated intensity setting shall provide an effective intensity of not less than 15,000 candelas at the following five points: the beam axis, plus and minus 15 degrees horizontally, and plus and minus 5 degrees vertically. ~~The effective intensity is determined by the equation:~~

$$\cancel{I_e = \frac{\int_{t_1}^{t_2} I\,dt}{0.2 + t_2 - t_1}}$$

~~where~~ ~~I_e is the effective intensity,~~

~~I is the instantaneous intensity, and~~

~~t_1 and t_2 are the times in seconds of the beginning and end of that part of the flash when the value of I exceeds I_e. The choice of times t_1 and t_2 maximizes the value of I_e.~~

The omnidirectional strobe lights at rated intensity setting shall provide an average effective intensity, ~~I_e,~~ of not less than 5,000 candelas through 360 degrees horizontally and between 2 and 10 degrees vertically. These strobe lights shall be capable of providing any one of three intensity settings. For unidirectional strobes the settings shall be approximately 100, 10, and 2 percent of rated intensity and for omnidirectional strobes 100, 33, and 6 percent of rated intensity. Both lights shall flash simultaneously at a rate of 90 ±30 flashes per minute.

TABLE 1. SCHEDULE OF LIGHTING EQUIPMENT FOR REIL

Purpose and Type of Fixture	Lamp Rating and Type	Power Units	
		Rating	Type
Runway End Identifier Lights (REIL) system.. [1/]			
Light, flashing, unidirectional, FAA-E-2159 or FAA AC 150/5345-51, type L-849, style E.	Capacitor-discharge, type as determined by manufacturer.	120/240V or 20A/120-240V	Separate source, or Series circuit power adapter, type as determined by manufacturer.
Light, flashing, omnidirectional, FAA AC 150/5345-51, type L-849, style F.	Capacitor-discharge, type as determined by manufacturer.	120/240V or 20A/120-240V	Separate source, or Series circuit power adapter, type as determined by manufacturer.

[1/] Two lights, flasher head and power unit, one is the master light and one is the slave light.

REIL FIXTURE: UNIDIRECTIONAL 240V, FAA AC 150/5345-51, TYPE L-849, STYLE E, (FLASHER HEAD AND POWER UNIT MAY BE MOUNTED SEPARATELY).

LAMP: AS DETERMINED BY MANUFACTURER.

POWER: 240V INPUT, 500VA EACH LIGHT. IF SOURCE IS HIRL CIRCUIT, USE POWER ADAPTER, 20A SERIES TO 240V 1000VA.

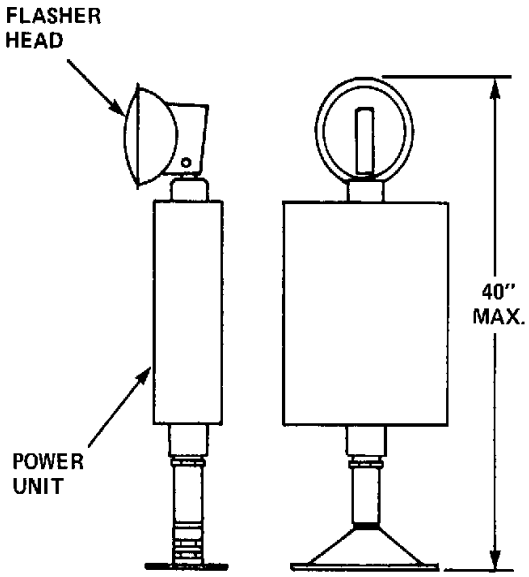

A. UNIDIRECTIONAL

REIL FIXTURE: OMNIDIRECTIONAL, 240V, FAA AC 150/5345-51, TYPE L-849, OR L-859, STYLE F, (FLASHER HEAD AND POWER UNIT MAY BE MOUNTED SEPARATELY).

LAMP: AS DETERMINED BY MANUFACTURER.

POWER: 240V INPUT, 500VA EACH LIGHT, IF SOURCE IS HIRL CIRCUIT, USE POWER ADAPTER, 20A SERIES TO 240V 1000VA.

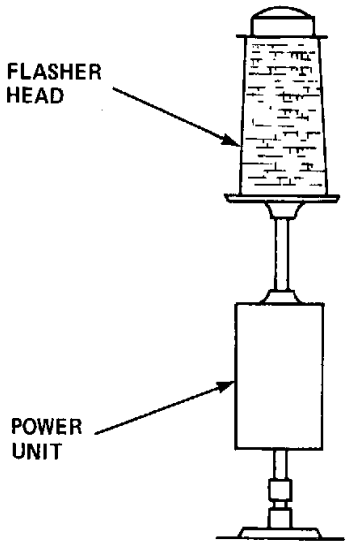

B. OMNIDIRECTIONAL

Figure 2. Typical runway end identification light (REIL) type FAA L-849

13. POWER AND CONTROLS.

14. POWER.

The input power to the REIL is usually 240 volts. The source may be a separate circuit from the airfield lighting vault or from a local continuous voltage source. If the local source is 120 volts, a 120 volt to 120/240 volt power transformer with 1000 VA rating may be required. Emergency power and automatic power transfer (WP009 01) is not required but can be used if available.

15. Series-Circuit Power Adapter.

If it is not practical to provide 120 or 240 volt power, the REIL may be connected to the HIRL series circuit using a suitable power adapter (WP009 04). This power adapter shall include sensors to select the correct intensity step for the REIL for any intensity setting of the HIRL. One power adapter should provide the power for both REIL fixtures.

16. CONTROLS.

The preferred controls for the REIL are independent ON-OFF and intensity settings remotely controlled from the airfield lighting control panels (WP009 05) in the air traffic control tower and the airfield lighting vault. If the power for the REIL is obtained from the HIRL series circuit, the ON-OFF switching and intensity setting may be automatically controlled with the HIRL.

DRAFT

TECHNICAL MANUAL

APPROACH LIGHTS, CATEGORY I - ALSF-1

SHOREBASED AIRFIELDS

Reference Material

Introduction 002 00
~~Definitive Designs for Naval Shore Facilities ..... NAVFAC P-272~~
Approach Visual Aids 003 00
Approach Lights, Category II and Category III - ALSF-2 ..... 003 07
Obstruction Lights 003 10
Runway Markings 004 01
Runway Threshold Lights 004 02
Displaced Threshold Lights and Markings 004 03
Runway End Lights 004 04
High-Intensity Runway Edge Lights (HIRL) 004 05
Runway Centerline Lights (RCL) 004 06
Electrical Power and Control for Visual Aids 009 00
Auxiliary Power and Power Transfer Equipment 009 01
Constant-Current Regulators 009 02
Special Power Supplies 009 04
Airfield Lighting Control Panels 009 05
PAR-56 Lampholder FAA-E-982
~~Airfield Lighting ..... MIL-HDBK-1023/1~~
Design Drawings for Visual Air Navigation Facilities ..... UFC 3-535-02
Sequence Flashing Lighting System, Elevated and Semi-Flush with Dimming and Monitoring FAA-E-2628
Isolation Transformer for High-Intensity Approach Light Systems (1500 Watts) FAA-E-2690
Low-Impact-Resistant Approach Light Supports FAA-E-2702
Aeronautical Ground Light and Surface Marking Colors ..... ICAO, Annex 14, Vol. 1, App. 1
Light, Markers, Airport, Semiflush MIL-L-26202
Light, Marker, Airport Approach, High Intensity, Type MB-1 ..... MIL-L-26990
Specification for Runway and Taxiway Light Fixtures ..... FAA AC 150/5345-46
Isolation Transformers for Airport Lighting Systems ..... FAA AC 150/5345-47
Specification for Discharge-Type Flashing Light Equipment ..... FAA AC 150/5345-51

Alphabetical Index

Subject **Page No.**

Access For Servicing. 8
Aiming Criteria. 8
Approach Lighting Controls 18
Approach Lighting Vault. 18
Approach Threshold Lights 14
Associated Facilities. 3
Barrette 4
Centerline Lights 8
Centerline Lights Description. 8
Centerline Lights Equipment 11

Alphabetical Index (Continued)

Centerline Lights Installation. 9
Centerline Lights Locations. 9
Constant-Current Regulators 18
Controls 18
Elevation-setting Angles for ALSF-1 Elevated Unidirectional Lights 9
Engine-Generator Set 18
Existing Installations 3
Frangible Supports 9
General Information. 4
Installation Requirements 8
Intensity of Steady-Burning Lights 16
Interleaving 18
Introduction. 3
Justification Requirements. 3
Light Location Identification 8
Light Planes 4
Lighting Equipment 8
Master Control Unit 18
Obstruction Clearances 4
Obstruction Lights 8
1000-Foot Crossbar 12
1000-Foot Crossbar Description. 12
1000-Foot Crossbar Equipment. 12
1000-Foot Crossbar Installation. 12
1000-Foot Crossbar Location. 12
Photometric Requirements. 16
Power And Controls 18
Power Sources. 18
Power Transfer Equipment 18
Prethreshold Wing Bar Lights 14
Purpose. 3
Regulators 18
Schedule Of Lighting Equipment For ALSF-1 6
Sequence Flashing Lights (SFL) 11
SFL Description. 11
SFL Equipment 12
SFL Installation. 12
SFL Locations. 11
Station Location 8
Supports for Lights 11
System Description. 4
System Power 18
Terminating Bar 12
Terminating Bar Description. 12
Terminating Bar Equipment. 14
Terminating Bar Installation 14
Terminating Bar Location. 14
Threshold Lights. 14
Threshold Lights Description. 14
Threshold Lights Equipment. 16
Threshold Lights Installation 14
Tolerances 8

Type Of Project. 4
Vault 18
Wing Bar Lights. 14
Wing Bar Lights Description/Location 14
Wing Bar Lights Equipment 14
Wing Bar Lights Installation. 14

Record of Applicable Technical Directives

None

1. INTRODUCTION.

This WP is for reference only. For approach lights used for CAT I conditions use MALSR at WP 003 14.

2. PURPOSE.

This Work Package (WP) contains the requirements for the centerline Approach Light System with Sequence Flashers (ALSF-1) required for operations in Category I conditions. These requirements are to be used for new installations and for upgrading existing installations. Category I conditions require Instrument Flight Rule (IFR) operations (WP002 00). The ALSF-1 is the standard high-intensity approach light system to provide visual guidance for precision IFR approaches. This system provides the visual guidance for alignment of the aircraft with the runway and final corrections before landing at night and during low visibility weather conditions. Approval of plans or requests for deviations shall be processed as directed in WP002 00.

3. JUSTIFICATION REQUIREMENTS.

Any runway that is equipped with a precision electronic approach aid such as an Instrument Landing System (ILS), Microwave Landing System (MLS), or Precision Approach Radar (PAR) should qualify for an ALSF-1 (WP003 00). The exceptions are approaches with an ALSF-2 for Category II conditions (WP003 07) or if it is not feasible to install an ALSF-2. Criteria to be considered for obtaining approval for an ALSF-1 include:

a. Mission requirements for operations in Category I conditions.

b. The frequency of occurrence of IFR conditions.

c. Terrain features in the approach areas that do no provide adequate visual guidance or produce misleading or deceptive cues to the pilots.

d. Fixed objects or hazards near the approach path or runway end that could endanger aircraft deviating from the approach or undershooting the runway.

4. ASSOCIATED FACILITIES.

In addition to the ILS, MLS, or PAR electronic aids, other airfield facilities required for use with the ALSF-1 for operations in Category I conditions should include the following:

a. The runway should be paved and not less than 150 feet wide. The runway length shall not be less than 6000 feet, but shorter runway lengths may be approved for special operating conditions.

b. The runway should be equipped with the following:

(1) Precision approach runway markings (WP004 01),

(2) High-intensity runway edge lights (HIRL) (WP004 05),

(3) High-intensity threshold lights (WP004 02),

(4) Runway end lights (WP004 04).

c. The approach should have a paved or stabilized end zone area extending 1000 feet into the approach area and not less than the width of the runway. The first 300 feet of this paved or stabilized area should have the same slope as the first 1000 feet of the runway. The remainder of the paved or stabilized area may have a slope of not more than ±1.5 percent.

d. The runway should have an RVR system.

e. Air traffic control should be provided during normal operating hours.

5. TYPE OF PROJECT.

The requirements for the ALSF-1 are for new installations; however, these requirements can apply for projects that replace or upgrade existing approach light

systems. Existing equipment that is in excess of these requirements may be removed. As an example, remove the flush-type sequence-flashing lights in the end zone area.

6. GENERAL INFORMATION.

7. SYSTEM DESCRIPTION.

The ALSF-1 is a system of light bars and barrettes in the approach zone immediately ahead of the runway threshold. The standard length of an ALSF-1 is 3000 feet unless terrain or other local conditions prevent a full length installation. Then the length may be shortened to not less than 2400 feet. The plan of the ALSF-1 is shown in figure 1 and the schedule of lighting equipment is given in table 1. The ALSF-1 consists of centerline light barrettes, sequence flashing lights, 1000-foot crossbar, terminating bar, prethreshold wing bars, and threshold lights. A barrette is three or more lights closely spaced in a transverse line so that from a distance they appear as a single short illuminated bar. For the ALSF-1, the length of a barrette shall not exceed 15 feet and the center-to-center spacing of the lights shall not exceed 5 feet.

8. OBSTRUCTION CLEARANCES.

The following restrictions apply:

a. No object will be permitted to obstruct the visibility of any approach light from the viewing window. As shown in figure 2, the viewing window is a rectangular area 100 feet above and below and 250 feet left and right of the ideal glide path at 4500 feet before the runway threshold.

b. A light plane or planes (figure 3), in which the lights of the system are located, are used for determining obstruction clearances of the approach lights. The side boundaries of the light plane are 200 feet on each side of the runway centerline extended. The end boundaries are at the runway threshold and at 200 feet before the start of the approach light system. All lines in the plane perpendicular to the centerline are level. The ideal light plane is a single horizontal plane through the runway threshold. If the 1000 feet of runway at the threshold end is sloped, the first 300 feet of the paved or stabilized area of the end zone and light plane for this area shall continue with the same slope. The final 700 feet of the paved or stabilized area may have a slope of not more than 1.5 percent up or down. From the 1000 foot crossbar to the beginning of the approach light system, the preferred light plane is horizontal and will include the 1000-foot crossbar lights. If the clearance of obstructions or terrain prohibits using a horizontal light plane, this plane may be sloped. The slope of this plane shall not exceed 2 percent up or 1.5 percent down. The preferred light plane in the area beyond the 1000-foot crossbar is a single plane, but changes in the slope of the plane are permitted. All light planes shall start and end at a light station and shall contain not less than three light stations.

c. No objects, except elevated lights of the ALSF-1 in the end zone, should be permitted to extend above the light planes within the boundaries. All railroads are considered as objects which extend 23 feet above the rails. Interstate highways are considered as objects 17 feet above the highest point of the road surface. Other highways, public roads, and parking areas are considered as objects which extend 15 feet above the surface. Private or military roads are considered as objects 10 feet or higher except for airport service roads where all vehicular traffic is controlled by the airport control tower or have signs requiring stopping and visual clearance for aircraft before proceeding and prohibits parking or stopping between the signs.

d. Every effort must be made to remove or relocate objects which penetrate the light plane. For objects which cannot be moved, such as an ILS localizer, the height must be kept to a minimum and shall be located as far from the threshold as possible.

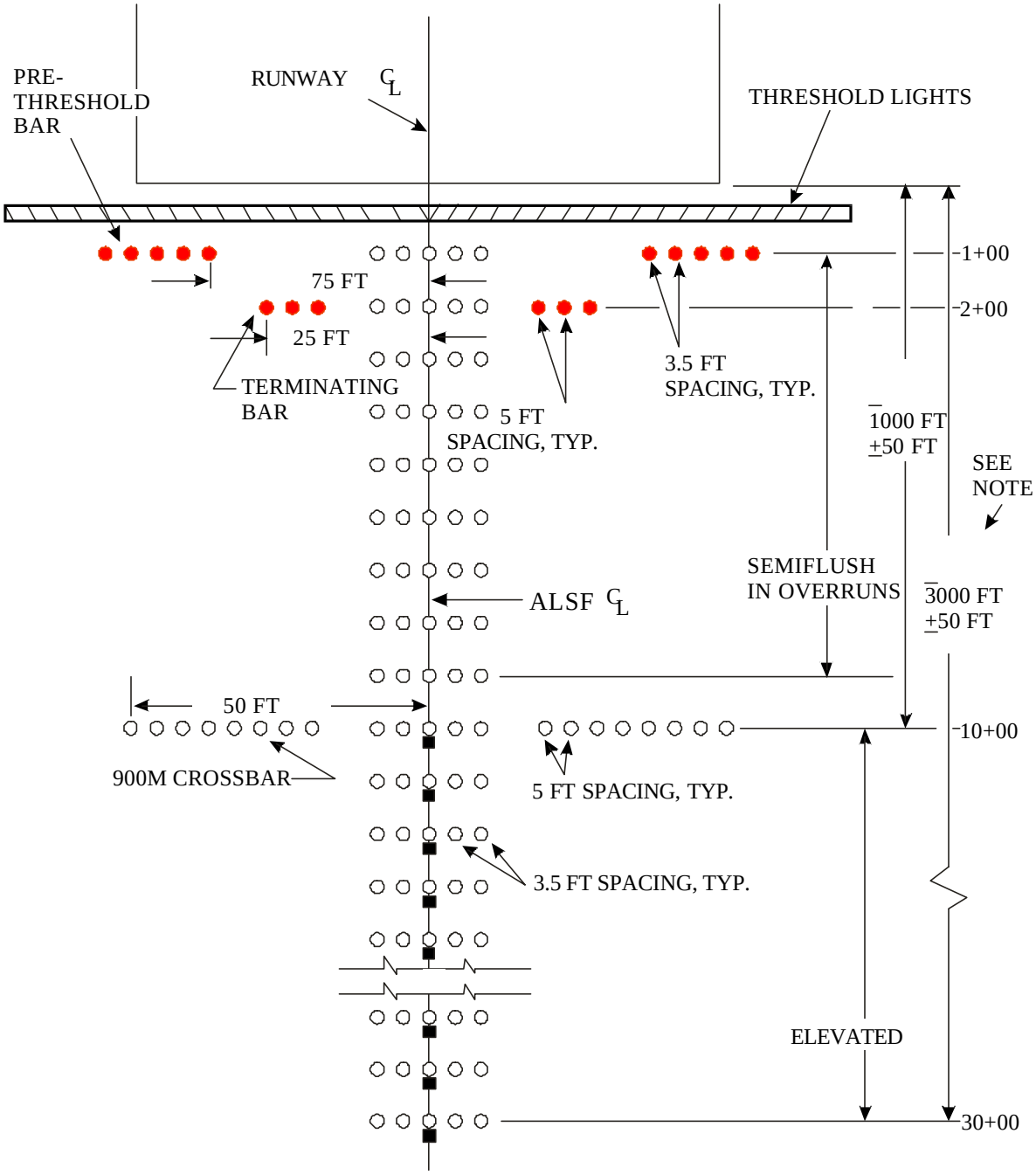

LEGEND:

- ○ WHITE LIGHTS
- ● RED LIGHTS
- ■ SFL

NOTE: SEE TEXT FOR ADJUSTMENTS AND TOLERANCES.

Figure 1. Plan for approach light system, Category I - ALSF-1

DRAFT

System Component	Fixture: Quantity and Mounting	Fixture: Type and Specification FAA	Fixture: Color	Lamp: Rating and Type	Isolation Transformer: Rating	Isolation Transformer: FAA Type AC 150/5345-47
CENTERLINE LIGHTS						
Centerline Barrettes 1+00 to 9+00	45 Semiflush	L-850E D38 [1/] AC150/5345-46	White	As determined by manufacturer	200W, 20/6.6A or two 150W, 20/6.6A	L-830-7 L-830-11
Centerline Barrettes 10+00 to 30+00	105 Elevated	FAA-E-982	White	300W, 20A Q20A/PAR56	300W, 20/20A	L-830-9
Sequence Flashing Lights (SFL)	21 Elevated	FAA-E-982 type 1, or FAA AC 150/ 5345-51, type L-849, style E	Bluish-White	As determined by manufacturer	Special power unit and control	
1000-FOOT CROSSBAR						
10+00 Side Bars	16 Elevated	FAA-E-982	White	300W, 20A Q20A/PAR56	300W, 20/20A	L-830-9
TERMINATING BAR LIGHTS						
Side Barrettes 2+00	6 Elevated	FAA-E-982	Red	500W, 20A Q20A/PAR56/1	500W, 20/20A	L-830-13
PRETHRESHOLD WING BAR						
Side Barrettes 1+00	10 Elevated	FAA-E-982	Red	500W, 20A Q20A/PAR56/1	500W, 20/20A	L-830-13
APPROACH THRESHOLD LIGHTS						
Center Section Threshold Bar	7 or 8 Semiflush (optional)	L-850D or E [1/] AC150/5345-46	Grn 180° Red 180°	As determined by manufacturer	One or two 200W, 20/6.6A	L-830-7
Outer Section Threshold Bar	0, 6, 14 [2/] Elevated	-	Grn 180° Red 180°	500W, 20A Q20A/T20/3	500W, 20/20A	L-830-13
		FAA-E-982	Green	500W, 20A Q20A/PAR56/1	500W, 20/20A	L-830-13

[1/] Existing installations using MIL-L-26202 lights may continue using these lights for replacement only.

[2/] Minimum number of elevated lights for runway widths of 150', 200', and 300' respectively, with an equal number of elevated lights on each side.

TABLE 1. SCHEDULE OF LIGHTING EQUIPMENT FOR ALSF-1

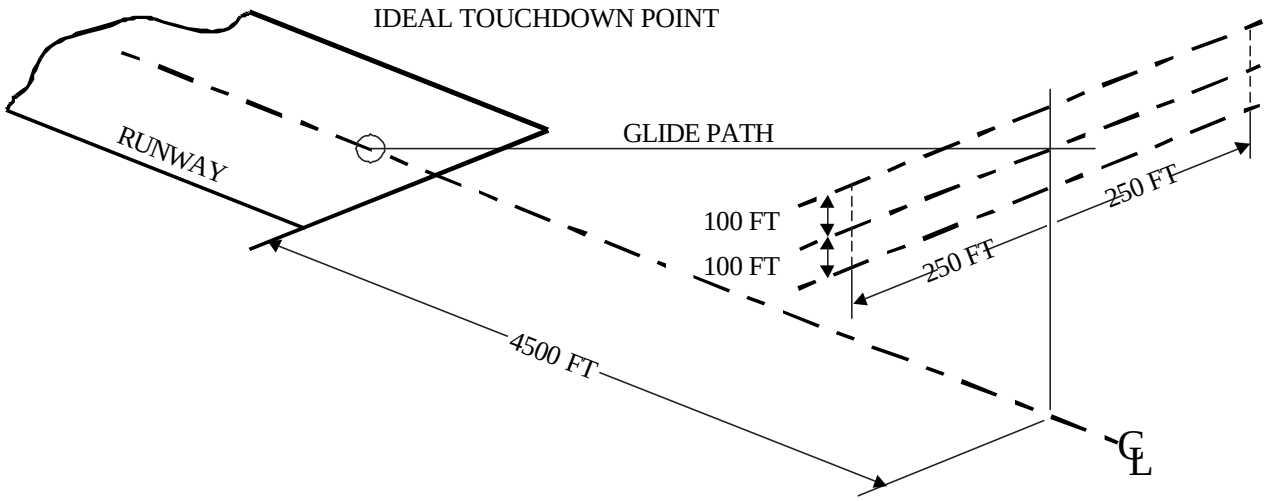

NOTE: OBSTRUCTIONS SHOULD BE CLEARED SO THAT ALL LIGHTS OF THE APPROACH PATH WILL BE VISIBLE FROM ANY POINT IN A 200 FT X 500 FT RECTANGLE, CENTERED ON THE GLIDE PATH, 4500 FT FROM THE THRESHOLD.

Figure 2. Viewing window for approach lights

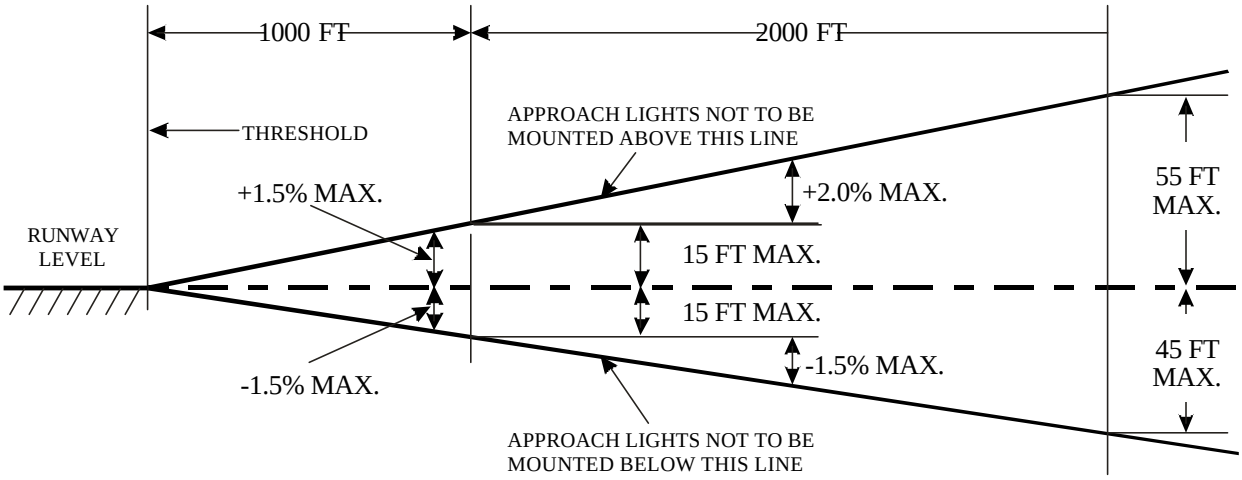

NOTE: THE BOUNDARIES OF THE LIGHT PLANES ARE THE RUNWAY THRESHOLD, 200 FT AHEAD OF THE END LIGHT STATION, AND 200 FT EACH SIDE OF CENTERLINE.

Figure 3. Light plane limits for elevations of approach lights

a. For objects which are not feasible to remove, lower, or relocate and cannot be cleared by the permitted slopes, a waiver may be granted (WP002 00) to exceed the slope limits.

b. Obstruction lights (WP003 10) are required on all objects protruding through the light plane with the exception of frangible-mounted elevated lights of the approach light system.

9. INSTALLATION REQUIREMENTS.

For details on design and installations of the ALSF-1 refer to **UFC 3-535-02**~~MIL-HDBK-1023/1 and NAVFAC P-272~~. General requirements for installation are given in this WP under the discussions of each type of light.

10. TOLERANCES.

The approved tolerances for positioning steady-burning ALSF-1 lights are as follows:

a. Lateral tolerance of a bar is ±3 inches.

b. Distance between individual light centers is ±1 inch.

c. Height for light centers up to 6 feet is ±1 inch.

d. Height for light centers between 6 and 40 is ±2 inches.

e. Height for light centers over 40 feet is ±3 inches.

~~k.~~**f.** Tolerance for vertical aiming of light units is ±1.0 degree.

g. Tolerance for horizontal aiming of light unit is ±5 degrees.

h. Longitudinal tolerance for the light bar from the designated station is ±10 feet, except light bars may be displaced 50 feet to avoid omitting a barrette where obstructions cannot be removed or cleared by acceptable clearance planes. Where barrettes must be located more than 10 feet from the usual station position, the nearby barrettes may be located to provide more uniform spacing between barrettes.

11. LIGHT LOCATION IDENTIFICATION (STATION LOCATION).

Positions of the lights may be identified by station or distance. Stations are the longitudinal distances in feet into the approach zone from the runway threshold. The runway threshold is station 0+00. An item located 745 feet from the threshold would be at station 7+45. This item may be located on or off the centerline. Lateral, vertical, and some longitudinal distances are given in feet and inches.

12. AIMING CRITERIA.

The beams of all approach lights shall be aimed into the approach and away from the runway threshold (figure 1). Some approach threshold lights are bidirectional and will have the red beam (as runway end lights) aimed along the runway.

13. All lights, except bidirectional lights with toe-in, shall be aimed in azimuth with the beam axes parallel to the extended runway centerline. Some elevated threshold lights and some existing semiflush threshold lights have 3.5 to 4 degrees toe-in toward the runway centerline which shall be allowed in aiming.

14. The vertical aiming of the elevated, unidirectional, steady-burning lights shall be aimed with elevation angles in accordance with table 2. These aiming angles are based on a glide-slope angle of three degrees. If other glide-slope angles are used, the vertical aiming shall be adjusted for the difference. The semiflush lights and the elevated bidirectional threshold lights have fixed elevation angles for the beams. Some existing SFL may also have fixed elevation angles for the beam.

15. ACCESS FOR SERVICING.

Provisions for servicing the ALSF-1 system should be provided by such facilities as access roads, footpaths, and catwalks.

16. LIGHTING EQUIPMENT.

The lighting equipment for the ALSF-1 shall be as given in table 1 and shown in figure 1.

17. CENTERLINE LIGHTS.

18. DESCRIPTION.

The centerline lights are white, incandescent, steady-burning lights located in barrettes along the centerline of the runway. In the end zone semiflush type lights are used in paved areas but elevated lights may be used in unpaved areas. In the outer approach area including those at station 10+00, elevated type lights are used. All these centerline lights are arranged in 5-light barrettes.

TABLE 2. ELEVATION-SETTING ANGLES FOR ALSF-1 ELEVATED UNIDIRECTIONAL LIGHTS

A. Steady-burning type MB-2 and FAA-E-982 lights

Station	Setting Angle above Horizontal* (Degrees)		Station	Setting Angle above Horizontal* (Degrees)	
	Preferred	Permitted		Preferred	Permitted
30+00	8.0	8.0	14+00	7.0	7.0
29+00	7.9	8.0	13+00	6.9	7.0
28+00	7.9	8.0	12+00	6.9	7.0
27+00	7.8	8.0	11+00	6.8	7.0
26+00	7.7	7.5	10+00	6.7	6.5
25+00	7.7	7.5	9+00	6.7	6.5
24+00	7.6	7.5	8+00	6.6	6.5
23+00	7.6	7.5	7+00	6.5	6.5
22+00	7.5	7.5	6+00	6.5	6.5
21+00	7.4	7.5	5+00	6.4	6.5
20+00	7.4	7.5	4+00	6.3	6.5
19+00	7.3	7.5	3+00	6.3	6.5
18+00	7.2	7.0	2+00	6.2	6.0
17+00	7.2	7.0	1+00	6.2	6.0
16+00	7.1	7.0	0+00	6.1	6.0
15+00	7.0	7.0			

* For approach slopes other than 3 degrees, the setting angles shall be adjusted for the difference.

B. Elevated SFL are all aimed 6 degrees above horizontal.

19. LOCATIONS.

(See figure 1.) The centerline lights are located at 100-foot intervals from station 1+00 to the outer end of the system. The barrettes are each perpendicular to the runway centerline. The middle light of each barrette shall be centered on the runway centerline, except if the runway has or will be equipped with runway centerline lights. Then the middle light will be on a line with the runway centerline lights (WP004 06). This line may be offset a maximum of 24 inches to either side of the runway centerline. The barrettes may be located ±10 feet from its base station to avoid local installation problems. To avoid major obstructions such as roads, buildings, railroads, and large objects that cannot be removed, the barrette may be displaced up to 50 feet from its station. Omit the barrette if larger displacement is necessary.

NOTE

Never omit more than one barrette in sequence.

If displacement greater than the 10-foot tolerance is necessary, the adjacent barrette ahead of and behind this station may be relocated to obtain more uniform spacing.

20. INSTALLATION.

The light fixtures within the centerline barrettes shall be uniformly spaced between 40 and 42 inches apart. The light-center heights shall be level. The semiflush lights shall be mounted on airport marker light bases imbedded in a concrete foundation for each barrette. The bases shall be installed to provide the proper height, horizontal aiming, and level for each light. The elevated lights shall be mounted on frangible supports and aimed vertically as shown in table 2. The mounting of the elevated lights shall be as follows:

DRAFT

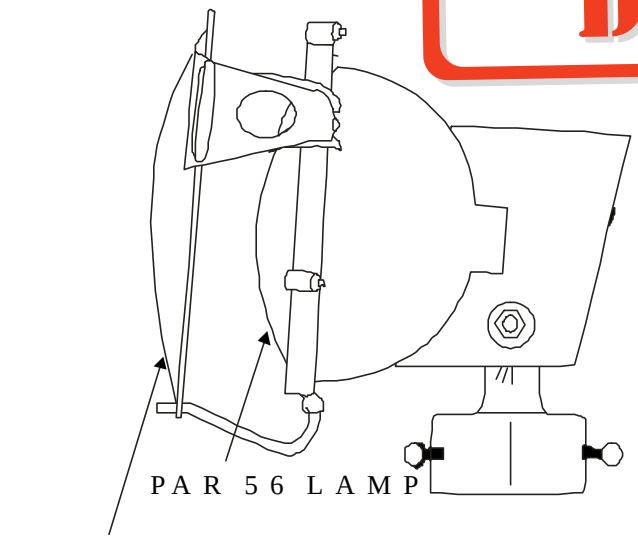

LIGHT: TYPE FAA-E-982, ELEVATED,
UNIDIRECTIONAL

ISOLATION TRANSFORMER:
FAA AC 150/5345-47, TYPE L-830-9

OR

FAA AC 150/5345-47, TYPE L-830-13

LOCATED AT CENTERLINE BARRETTES STATIONS 10+00 TO 30+00 AND 1000-FT CROSSBAR - 300W LAMPS AND ISOLATION TRANSFORMERS; OUTER TERMINATING BARRETTES AND PRETHRESHOLD BAR BARRETTES -- 500W LAMPS AND ISOLATION TRANSFORMERS

Figure 4. Typical elevated centerline, 1000-foot crossbar, terminating bar and prethreshold bar lights

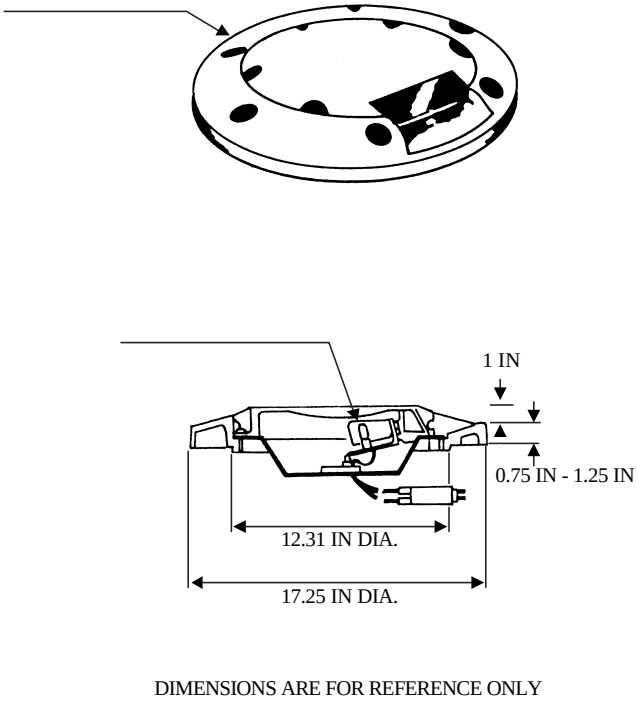

Figure 5. Typical semiflush centerline barrette light, FAA L-850E

a. For heights up to 6 feet, the support shall be mounted on a frangible coupling for each light. The support shall be conduit.

b. For light heights between 6 and 40 feet, the lights shall be mounted on low-impact-resistant support towers.

c. If the height of the lights is more than 40 feet, semifrangible supports should be used. Semifrangible supports have the top 20 feet low-impact resistant and the bottom section rigid.

21. EQUIPMENT.

The centerline lights are both elevated and semiflush incandescent light fixtures (table 1 and figures 4 and 5). For photometric requirements refer to PHOTOMETRIC REQUIREMENTS in ~~this Wp~~**the FAA Advisory Circular for the specific light fixture**. The semiflush lights shall be installed on light bases. The frangible-mounted elevated lights use frangible couplings and the proper length of conduit. The low-impact-resistant and semifrangible supported lights require type FAA-E-2702 fiberglass supports, type FAA-E-2690 1500-watt isolation transformers, type FAA-E-982 lampholders with failed-lamp shorting devices, and quick-disconnect cable connectors at the support base for all electrical wiring.

22. SEQUENCE FLASHING LIGHTS (SFL).

23. DESCRIPTION.

This lighting system consists of the Sequence Flashing Lights (SFL) and the master control unit. The SFL are high-intensity blue-white flashing lights usually of the capacitance-discharge type. The lights are flashed in sequence starting from the outer or approach end of the system. The system flashes twice per second with an interval of 1/60 second between adjacent stations and a pause before repeating. The standard 3000-foot ALSF-1 uses 21 elevated, unidirectional SFL. Each SFL system has a master control unit that provides power for the system, the trigger signals for the flashing sequence, and the monitoring function. The purpose of these lights is to provide early identification of the approach lighting system and centerline alignment information during final approach.

24. LOCATIONS.

One SFL unit shall be located at each centerline light barrette from station 10+00 to the outer end of the system (figure 1). These lights shall be not more than 5 feet from the centerline of the approach light system. All SFL shall be along the same line on or parallel to the centerline. If necessary the SFL may be displaced not more than 5 feet in front of the corresponding centerline barrette. The master control unit may be located in the

approach lighting vault or other site and shall be not less than 200 feet from the light system centerline and shall not be an obstruction.

25. INSTALLATION.

The flasher head may be mounted as part of the unit power supply or separated to allow the proper positioning of the light. If the centerline lights are mounted on frangible or low-impact-resistant supports, the flasher heads are remotely mounted usually be the same method as are the steady-burning lights. The row of flasher heads shall be in a line in or just below the light plane. The preferred height is the same as the centerline lights for the station. The row of SFL flasher heads shall be not more than 4 feet below the elevation of the centerline lights. The flasher heads shall be aimed with the axes of the beams six degrees above the horizontal for all stations. The power supply units are usually mounted at the base of the supports for the flasher head with the cable length to be not more than 150 feet.

26. EQUIPMENT.

The sequence flashing lighting shall consist of the master control unit and 15 to 21 SFL (table 1). The SFL shall be the elevated type (figure 6) which permit the flasher heads to be located away from the power supply units. For photometric requirements refer to PHOTOMETRIC REQUIREMENTS ~~in this Wp~~**listed in the FAA Advisory Circular for the specific light fixture**. The frangible-mounted SFL use frangible couplings and a proper length of conduit. The low-impact-resistant and semi-frangible supported SFL shall be mounted on the same supports as the centerline lights. The wiring to these lights shall use quick-disconnect cable connectors at the base of the support. The SFL system shall provide one of three intensities as selected. The master control unit shall provide the power at the selected intensity and the trigger signal for each of the SFL. The control of the SFL shall be interlocked with the steady-burning lights so the SFL cannot operate unless the steady-burning lights are operating. Refer to APPROACH LIGHTING CONTROLS this WP.

27. 1000-FOOT CROSSBAR.

28. DESCRIPTION.

The 1000-foot crossbar consists of a bar of elevated, white, steady-burning lights on each side of the centerline light barrette at station 10+00. The purpose of this light crossbar is to indicate to the approaching pilot that the runway threshold is 1000 feet away. It also serves as a visual roll attitude reference to assist in keeping the aircraft level during final approach.

29. LOCATION.

The 1000-foot crossbar is normally located at station 10+00 (figure 1). The lights of the crossbar are located in line with the lights of the centerline barrette at this station. These lights, including the centerline lights, form a bar of lights 100 feet long that is symmetrical about the ALSF-1 system.

30. INSTALLATION.

The 1000-foot crossbar uses elevated lights only, but it is also the terminal for the end zone light plane. If the end zone light plane is too low for mounting the elevated lights, the height of the 1000-foot crossbar lights shall be at the minimum height of the fixture above the end zone plane at this station. The outer approach lighting plane shall be through the light centers of the 1000-foot crossbar lights. All lights of the 1000-foot crossbar, including the centerline barrette, shall be at the elevation of this line. The 1000-foot crossbar shall have 8 lights on each side at 5-foot spacing starting 15 feet from the approach lighting centerline (figure 1). The crossbar shall be perpendicular to the centerline. The lights shall be mounted on frangible couplings or low-impact-resistant supports. The aiming of these crossbar lights shall be the same as for the centerline barrette lights at this station.

31. EQUIPMENT.

The 1000-foot crossbar lights are elevated, white, unidirectional light fixtures (table 1 and figure 4). For photometric requirements refer to PHOTOMETRIC REQUIREMENTS **listed in the FAA Advisory Circular for the specific light fixture**~~this WP~~.

32. TERMINATING BAR.

33. DESCRIPTION.

The terminating bar lights indicate the end of the approach light system and start the transition to the runway light system. The red side-barrette lights are used to show that the area is unsafe for touchdown. This bar also serves as a visual roll attitude reference to assist the pilot in keeping the aircraft level. The centerline barrette is part of the centerline lights, but also forms part of the terminating bar.

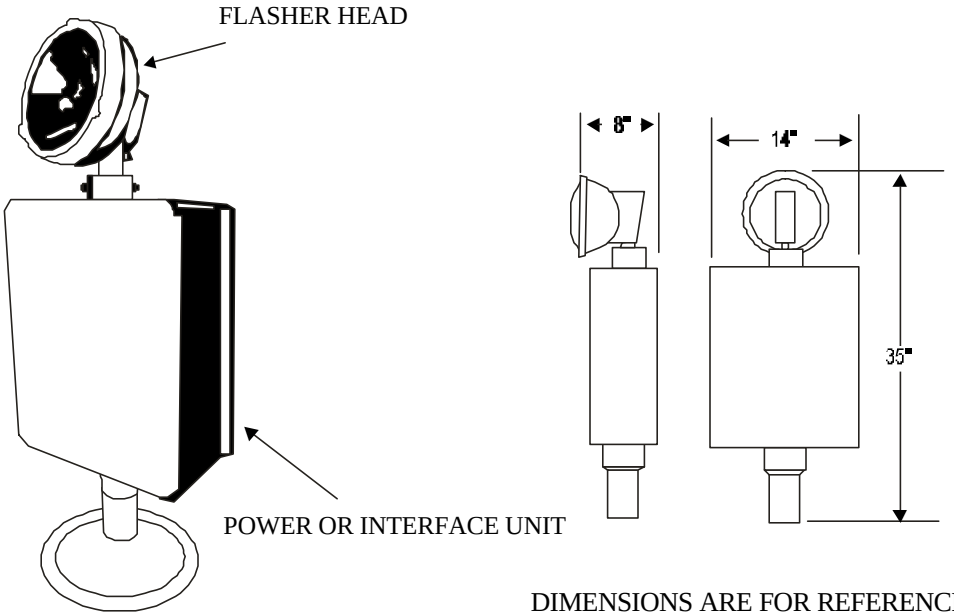

DIMENSIONS ARE FOR REFERENCE ONLY
OUTLINE DIMENSIONS

LIGHT: SEQUENCE FLASHING, ELEVATED, FAA-E-2628, OR FAA AC 150/5345-51, TYPE L-849M STYLE E.

LAMP: PAR56, FLASH TUBE, TYPE AS DETERMINED BY MANUFACTURER

POWER OR INTERFACE UNIT: TYPE AS DETERMINED BY MANUFACTURER

MASTER CONTROLLER: (NOT SHOWN) AS DETERMINED BY MANUFACTURER

LOCATION: ONE AT EACH CENTERLINE BARRETTE, STATIONS 10+00 TO 30+00

Figure 6. Typical sequence flashing light (SFL)

34. LOCATION.

The terminating bar lights are 200 feet into the approach area at station 2+00 (figure 1). The 5-light barrette across the approach lighting centerline is part of the centerline lights. The innermost lights of the 3-light barrettes shall be 36 feet from the centerline of the approach light system.

35. INSTALLATION.

The 3-light barrettes on each side of the centerline shall be elevated lights with 5-foot spacings, and the light centers may be at the minimum height above the end zone light plane. The lights of the 3-light barrettes shall have the beams parallel to the runway centerline in azimuth and shall be aimed vertically as shown in table 2 for this station.

36. EQUIPMENT.

The lights are red, unidirectional, elevated lights (table 1). These lights are shown in figure 4. These lights shall use red filters. For photometric requirements refer to PHOTOMETRIC REQUIREMENTS this WP. Frangible couplings are required for these lights.

37. PRETHRESHOLD WING BAR LIGHTS.

38. DESCRIPTION/LOCATION.

The prethreshold wing bar lights (also called wing bar lights) are located 100 feet into the approach zone (station 1+00) from the runway threshold. The two bars consist of 5-light barrettes with a barrette on each side of the centerline. The inner light of each barrette shall be 75 feet from the centerline.

39. INSTALLATION.

The prethreshold wing bar lights shall be in a line perpendicular to the approach light centerline with the lights spaced at 3.5-foot intervals (figure 1). These elevated lights may be above the light plane to avoid having part of the light below the surface of the blast pad. The height of the lights above the light plane shall be not more than the minimum mounting height of the fixture. These lights shall have the beams parallel to the runway centerline in azimuth and shall be aimed vertically as shown in table 2.

40. EQUIPMENT.

The prethreshold wing bar lights are red, elevated, unidirectional light fixtures (table 1). These lights are shown in figure 4. For photometric requirements refer to PHOTOMETRIC REQUIREMENTS ~~in~~ **listed in the FAA Advisory Circular for the specific light fixture**~~this WP~~. Frangible couplings are required for mounting these lights.

41. APPROACH THRESHOLD LIGHTS.

42. DESCRIPTION.

The approach threshold lights are those threshold lights which are powered by the approach lighting circuits. These lights are located only at the approach threshold between the lines of runway threshold lights (see figure 1). These approach lights should be in line with the runway threshold lights (WP004 02 or WP004 03). The lights are unidirectional but may use bidirectional fixtures emitting green light toward the approach and red light toward the runway. Both semiflush and elevated lights are used. The purpose of the approach threshold lights is to augment the runway threshold lights for marking the beginning of the runway. The red beams of bidirectional lights serve as runway end lights to mark the rollout end of the runway for landings from the opposite direction or the beginning of the runway for taking off.

43. INSTALLATION.

The approach threshold lights shall be installed in line with the runway threshold lights. The approach threshold lights shall be equally spaced between the innermost lights of the runway threshold lights except a gate 35 feet each side of the runway centerline may be without lights to prevent tail-hook bounce. The spacing shall be not more than 10 feet. The line of threshold lights shall be at right angles to the runway centerline. If threshold lights are installed in the center section gate, unidirectional semiflush lights shall be used. At light positions 36 feet or more from the centerline, the lights may be elevated or semiflush types. The semiflush lights shall be mounted on light bases with the top of the base below the runway surface as recommended by the manufacturer. The lights shall be level with the axes of the beams parallel in azimuth to the runway centerline. The elevated lights shall be mounted on frangible couplings and leveled and may be unidirectional or bidirectional types. If the type of lights used have the toe-in, the toe-in of these lights shall be towards the runway centerline with equal angles for both beams. The elevated lights may extend above the light plane, but the height shall be not more than the minimum mounting height for the fixtures.

DRAFT

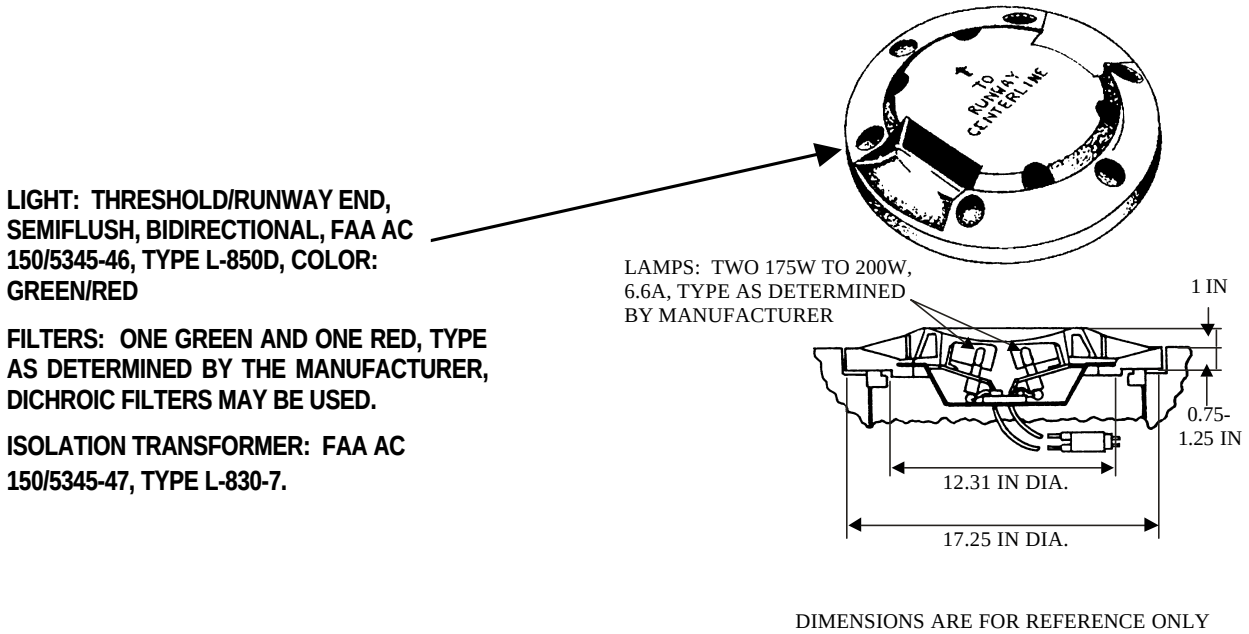

A. BIDIRECTIONAL LIGHT

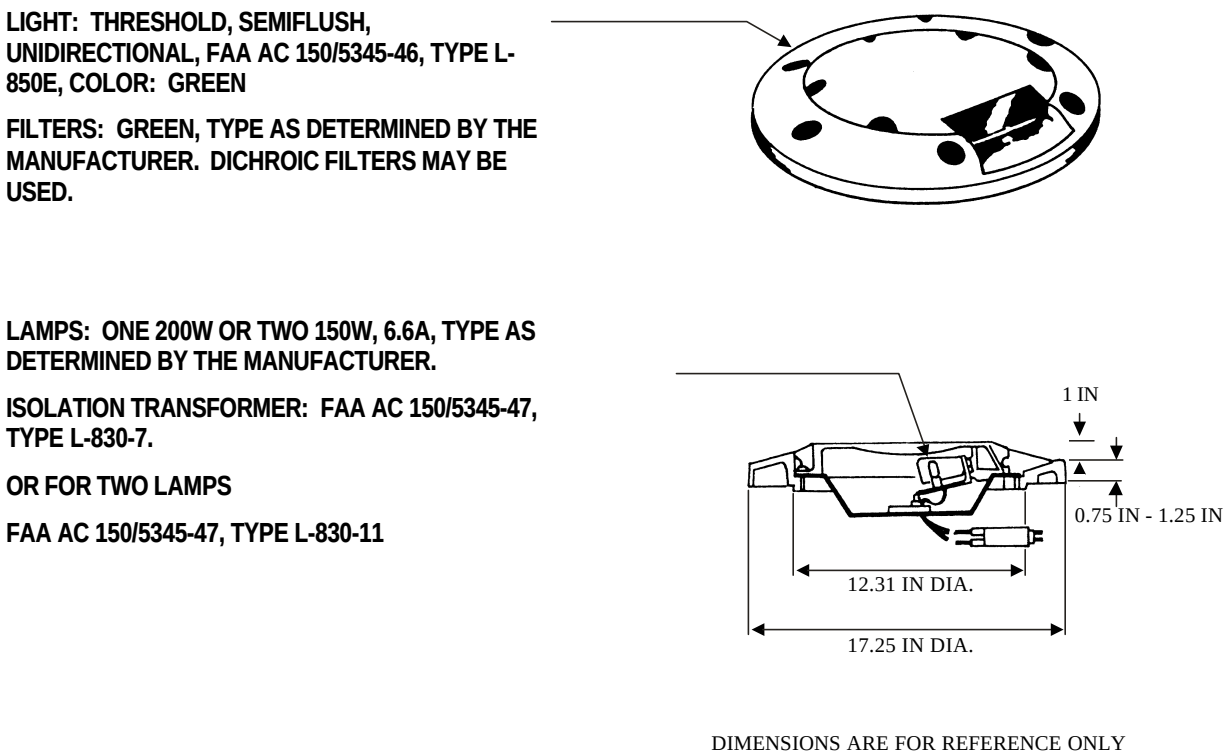

B. UNIDIRECTIONAL LIGHT

Figure 7. Typical semiflush approach threshold lights, type FAA L-850D or L-850E

LIGHT: THRESHOLD ELEVATED, BIDIRECTIONAL, MIL-L-26990 TYPE MB-1, GREEN/RED

LAMP: 500W, 20A, TYPE Q20A/T20/3

FILTER: GREEN 180°, RED 180°

ISOLATION TRANSFORMER: FAA AC 150/5345-47 TYPE L-830-13

LOCATED AT APPROACH THRESHOLD BAR - OUTER SECTIONS OF INBOARD LIGHTS

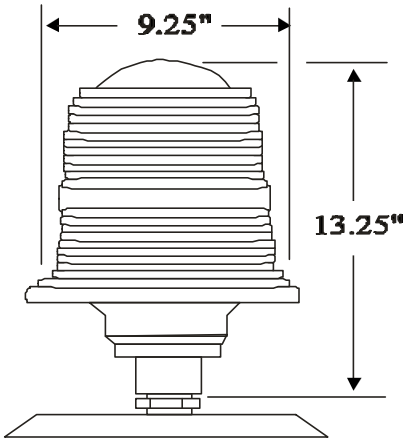

DIMENSIONS ARE FOR REFERENCE ONLY

Figure 8. Typical bidirectional, elevated approach threshold light, type MB-1

44. EQUIPMENT.

The approach threshold lights are as required in table 1. If used, there shall be approximately 8 semiflush lights (figure 7). If bidirectional lights are used, green filters are required for the threshold light beams and red filters for the beams toward the runway. Unidirectional lights shall have green filters. Dichroic filters may be used. The lamps are the type determined by the manufacturer. The number of elevated lights will vary with the width of the runway, but for a 200-foot wide runway there shall be approximately 4 additional lights. These elevated lights may be either unidirectional lights (figure 4) or bidirectional lights (figure 8). The bidirectional elevated lights shall have green and red filters and unidirectional lights shall have green filters. These elevated lights shall be mounted on frangible couplings.

45. PHOTOMETRIC REQUIREMENTS.

46. All the approach lights shall be unidirectional lights except the inboard threshold lights may be bidirectional lights as combination threshold and runway end lights. The axes of the beams shall be parallel to the runway centerline in azimuth, except the elevated inboard threshold lights, if bidirectional, may be toed-in towards the runway centerline at not more than 4.5 degrees. For elevation of the beam axis, refer to AIMING CRITERIA, in this WP. The color of the emitted lights shall be in accordance with ~~Specification~~ **ICAO, Annex 14, Vol. 1, App. 1**~~MIL-C-25050~~ as follows:

a. Centerline and 1000-foot crossbar lights - aviation white,

b. Terminating side barrettes and prethreshold wing bars lights - aviation red,

c. Threshold lights - aviation green,

d. Sequence flashing lights (SFL) - white or bluish-white which may not meet aviation white requirements.

47. Intensity Of Steady-Burning Lights.

The intensity of these lights shall be variable in five steps of 100, 20, 4, 0.8, and 0.2 percent of rated intensity for the steady burning lights. The intensity-beamspread for these lights at rated current shall be as shown in ~~figure 9. The average intensity of the main beam shall be the arithmetic mean of all points inside contour I on a uniform grid with points not more than one degree apart for each coordinate axis~~**the FAA AC for the specific light fixture**.

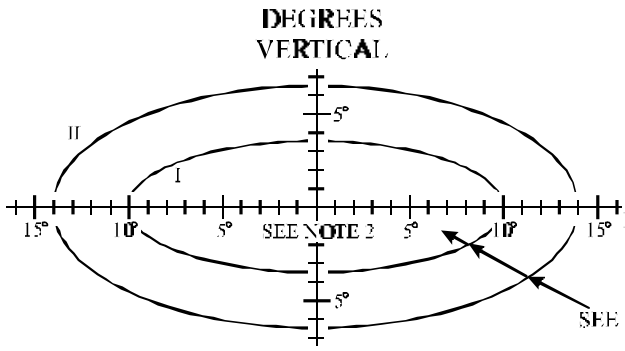

A. ELEVATED APPROACH LIGHTS; CENTERLINE 300M (1000FT) CROSSBAR (STA 10+00 TO 30+00)

	I=50%	II=10%
a	10.0°	14.0°
b	5.0°	6.5°

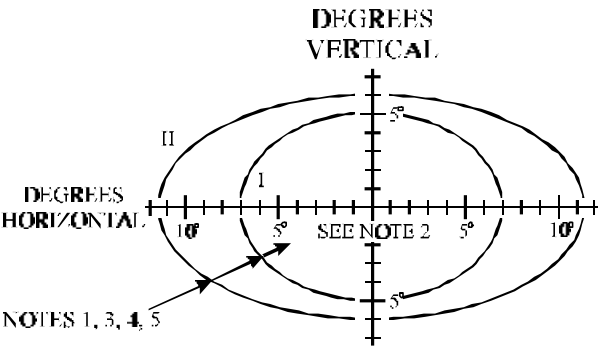

B. SEMIFLUSH WHITE OR RED APPROACH LIGHTS; CENTERLINE OR SIDE ROW (STA 1+00 TO 9+00)

	I=50%	II=10%
a	7.0°	11.5°
b	5.0°	6.0°

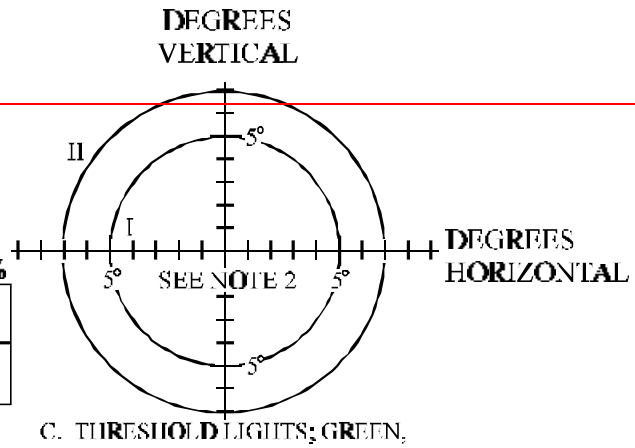

	I=50%	II=10%
a	5.5°	7.5°
b	4.5°	6.0°

C. THRESHOLD LIGHTS; GREEN, ELEVATED OR SEMIFLUSH

NOTES:

1. ALL CONTOURS ARE ELLIPSES CALCULATED BY EQUATION $\frac{X^2}{a^2} + \frac{Y^2}{b^2} = 1$
2. THE MINIMUM AVERAGE INTENSITY OF THE MAIN BEAM (INSIDE CONTOUR I) IS 20,000 CD FOR WHITE, OR 5000 CD FOR RED.
3. MAXIMUM INTENSITY SHOULD NOT EXCEED 1.5 TIMES ACTUAL AVERAGE INTENSITY.
4. MINIMUM INTENSITY OF I–50% AND II–10% OF REQUIRED MAIN BEAM INTENSITY.
5. FOR SEMIFLUSH UNITS, THE PORTION OF LIGHT CUT OFF BY THE MOUNTING SURFACE MAY BE DISREGARDED.

~~Figure 9. Photometric intensity distribution requirements of steady-burning high-intensity approach lights~~

48. Intensity of SFL.

The intensities of these lights shall be progressively variable in three steps of 100, 10, and 2 percent of the rated intensity of the SFL. The SFL at the rated intensity setting shall provide an effective intensity of not less than 15,000 candelas at the following five points: the beam axis, plus and minus 15 degrees horizontally, and plus and minus 5 degrees vertically. ~~The effective intensity is determined by the equation:~~

$$\cancel{I_e = \frac{\int_{t_1}^{t_2} I\,dt}{0.2 + t_2 - t_1}}$$

~~where~~ ~~I_e is the effective intensity,~~

~~I is the instantaneous intensity, and~~

~~t_1 and t_2 are the times in seconds of the beginning and end of that part of the flash when the value of I exceeds I_e. The choice of times t_1 and t_2 maximizes the value of I_e.~~

Each SFL shall flash twice per second with the duration of the effective portion of the flash between 250 and 5500 microseconds. The SFL shall flash sequentially towards the runway thresholds at intervals of 1/60 second between adjacent lights.

49. POWER AND CONTROLS.

50. POWER SOURCES.

The primary source of power for the ALSF-1 approach light system is usually from commercial electrical power sources (WP009 00) via appropriate distribution transformers. Since the use of the approach lights is critical for air operations, a secondary or emergency power source, usually an engine-generator set, is provided (WP009 01). An automatic transfer, which switches to the emergency power source in less than 15 seconds when the primary power source fails, shall be provided.

51. SYSTEM POWER.

The ALSF-1 incandescent steady-burning lights are powered by three series circuits (~~figure 10~~**figure 9**). Each series circuit consists of a constant-current regulator, power cables, and isolation transformers. The constant-current regulators (WP009 02) shall be 30KW or 50KW size with 5-step intensity settings. These regulators shall be located in the regulator room of the approach lighting vault. The cables shall be types appropriate for overhead or underground installation. Lights shall be equipped with series isolation transformers of the proper type. The light circuits may be interleaved to provide lights throughout the system if one circuit should become inoperative. Power to the SFL shall be from the primary or emergency source through suitable distribution transformers and the master control unit. Multiple type circuits supply the power to each light (WP009 04).

52. APPROACH LIGHTING CONTROLS.

The ALSF-1 approach lights shall be remotely controlled from the airfield lighting control panel (WP009 05) in the air traffic control tower and from the approach lighting vault. The steady-burning lights are controlled as one unit for operating the lights and for selecting any of five intensity settings. The sequence flashing lights have a separate control for switching but can be operated only when the steady-burning lights are operating. The three intensity settings shall also be interlocked with the steady-burning light intensity as follows:

a. The SFL shall be on high intensity only if the steady-burning lights are on intensity steps 4 or 5.

b. The SFL shall be on medium intensity only if steady-burning lights are on intensity step 3.

c. The SFL shall be on low intensity only if steady-burning lights are on steps 1 or 2.

53. APPROACH LIGHTING VAULT.

Each ALSF-1 approach light system should be provided with an approach lighting vault to house the power and control equipment. This vault should have three or more compartments containing the following:

a. The lighting control compartment.

b. The generator room with the emergency engine-generator set and the automatic power transfer equipment.

c. The regulator room with the constant-current regulators, distribution transformers, and major switching components. The size of this room should allow space for additional regulators and equipment.

The SFL master control unit may be located in the regulator room or it may be located separately at a more convenient location.

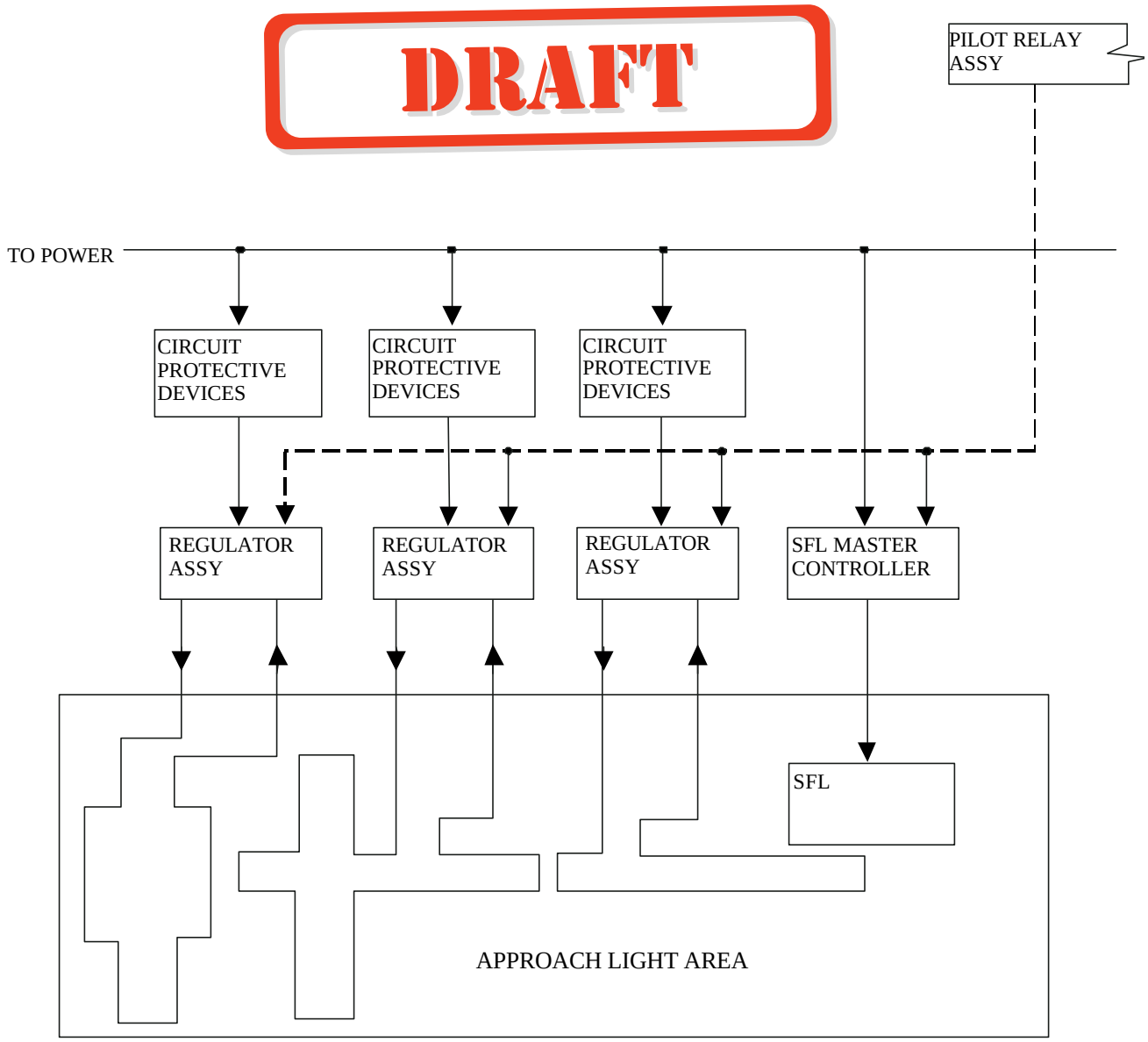

~~Figure 10~~**Figure 9**. Block diagram - approach light circuits

DRAFT

DRAFT

TECHNICAL MANUAL

APPROACH LIGHTS, CATEGORY II AND CATEGORY III - ALSF-2

SHOREBASED AIRFIELDS

Reference Material

Introduction 002 00
~~Definitive Designs for Naval Shore Facilities ..... NAVFAC P-272~~
Approach Visual Aids 003 00
~~Approach Lights, Category I - ALSF-1 ..... 003 06~~
Obstruction Lights 003 10
Runway Markings 004 01
Runway Threshold Lights 004 02
Displaced Threshold Lights and Markings 004 03
Runway End Lights 004 04
High-Intensity Runway Edge Lights (HIRL) 004 05
Runway Centerline Lights (RCL) 004 06
Touchdown Zone Lights (TDZL) 004 07
Electrical Power and Control for Visual Aids 009 00
Auxiliary Power and Power Transfer Equipment 009 01
Constant-Current Regulators 009 02
Special Power Supplies 009 04
Airfield Lighting Control Panels 009 05
PAR-56 Lampholder FAA-E-982
Design Drawings for Visual Air Navigation Facilities ..... UFC 3-535-02
~~Airfield Lighting ..... MIL-HDBK-1023/1~~
Sequence Flashing Lighting System, Elevated and Semi-Flush with Dimming and Monitoring FAA-E-2628
Isolation Transformer for High-Intensity Approach Light Systems FAA-E-2690
Low-Impact-Resistant Approach Light Supports FAA-E-2702
Aeronautical Ground Light and Surface Marking Colors ..... ICAO, Annex 14, Vol. 1, App. 1
Light, Marker, Airport Approach, High Intensity, Type MB-1 ..... MIL-L-26990
Specification for Runway and Taxiway Light Fixtures ..... FAA AC 150/5345-46
Isolation Transformers for Airport Lighting Systems ..... FAA AC 150/5345-47
Specification for Discharge-Type Flashing Light Equipment ..... FAA AC 150/5345-51

Alphabetical Index

Subject **Page No.**

Access For Servicing. 8
Aiming Criteria. 8
Approach Lighting Controls 18
Approach Lighting Vault. 20
Approach Threshold Lights 14
Associated Facilities. 3
Barrette 4
Centerline Lights 8
Centerline Lights Description. 8
Centerline Lights Equipment 9

Centerline Lights Installation. 9
Centerline Lights Locations. 8
Controls 18
Engine-Generator Set 18
Existing Installations 3
500-Foot Crossbar 13
500-Foot Crossbar Description. 13
500-Foot Crossbar Equipment 14
500-Foot Crossbar Installation. 13
500-Foot Crossbar Location. 13
Frangible Supports 9
General Information. 4
Installation Requirements 4
Intensity of Steady-Burning Lights 18
Intensity Of SFL. 18
Interleaving. 18
Introduction. 3
Justification Requirements. 3
Light Location Identification 8
Light Planes 4
Lighting Equipment 8
Master Control Unit 11
Obstruction Clearances 4
Obstruction Lights 4
1000-Foot Crossbar 13
1000-Foot Crossbar Description. 13
1000-Foot Crossbar Equipment. 13
1000-Foot Crossbar Installation. 13
1000-Foot Crossbar Location. 13
~~Photometric Requirements. 16~~
Power And Controls 18
Power Sources. 18
Power Transfer Equipment 20
Purpose. 3
Regulators 18
Schedule Of Lighting Equipment For ALSF-2 6
Sequence Flashing Lights (SFL) 11
SFL Description. 11
SFL Equipment 13
SFL Installation. 11
SFL Locations. 11
Side Row Lights. 14
Side Row Lights Description. 14
Side Row Lights Equipment 14
Side Row Lights Installation. 14
Side Row Lights Location. 14
Station Location 8
Supports for Lights 9
System Description. 4
System Power 18
Threshold Lights. 14
Threshold Lights Description. 14
Threshold Lights Equipment. 16

DRAFT

Threshold Lights Installation.....14
Tolerances.....8
Type Of Project.....3
Vault.....18

Record of Applicable Technical Directives

None

1. INTRODUCTION.

2. PURPOSE.

This Work Package (WP) contains the requirements for the centerline Approach Light System with Sequence Flashers (ALSF-2) required for operations in Category II and Category III conditions. These requirements are to be used for new installations and for upgrading existing installations. Category II and Category III conditions require Instrument Flight Rules (IFR) operations (WP002 00). The ALSF-2 is similar to the ALSF-1 (WP003 06) approach light system with additional lights intended to provide visual guidance for precision IFR approaches in very low visibilities. This system provides the visual guidance for alignment of the aircraft with the runway and final corrections before landing at night and during low visibility weather conditions. Approval of plans or requests for deviations shall be processed as directed in WP002 00.

3. JUSTIFICATION REQUIREMENTS.

Any runway that is equipped with a precision electronic approach aid such as a precision Instrument Landing System (ILS), precision Microwave Landing System (MLS), or Precision Approach Radar (PAR) and intended for operation in RVR conditions below 1600 feet should qualify for an ALSF-2 (WP003 00). Criteria to be considered for obtaining approval for an ALSF-2 include:

a. Mission requirements for operations in Category II or Category III conditions.

b. The frequency of occurrence of these low RVR conditions.

4. ASSOCIATED FACILITIES.

In addition to the precision ILS, precision MLS, or precision PAR electronic aids, other airfield facilities required for use with the ALSF-2 for operations in Category II and III should include the following:

a. The runway should be paved and not less than 150 feet wide. The runway length shall not be less than 6000 feet.

b. The runway should be equipped with the following:

(1) Precision approach instrument runway markings (WP004 01),

(2) High-intensity runway edge lights (HIRL) (WP004 05),

(3) High-intensity threshold lights (WP004 02),

(4) Runway end lights (WP004 04),

(5) Runway centerline lights (WP004 06),

(6) Touchdown zone lights (TDZL) (WP004 07).

c. The approach should have a paved or stabilized end zone area extending 1000 feet into the approach area and not less than the width of the runway. The first 300 feet of this paved or stabilized area should have the same slope as the first 1000 feet of the runway. The remainder of the paved or stabilized area may have a slope of not more than ±1.5 percent.

d. The runway should have two or more RVR systems.

e. Air traffic control shall be provided during normal operating hours.

5. TYPE OF PROJECT.

The requirements for the ALSF-2 are for new installations; however, these requirements can apply for projects that replace existing ALSF-2 approach light systems or to upgrade ALSF-1 approach light systems.

6. GENERAL INFORMATION.

7. SYSTEM DESCRIPTION.

The ALSF-2 is a system of light bars and barrettes in the approach zone immediately ahead of the runway threshold. The standard length of an ALSF-2 is 3000

feet unless terrain or other local conditions prevent a full length installation. Then the length may be shortened to not less than 2400 feet. The plan of the ALSF-2 is shown in figure 1 and the schedule of lighting equipment is given table 1. The ALSF-2 consists of centerline light barrettes, sequence flashing lights, 1000-foot crossbar, 500-foot crossbar, side row barrettes, and threshold lights. A barrette is three or more lights closely spaced in a transverse line so that from a distance they appear as a single short illuminated bar. For the ALSF-2, the length of a barrette shall not exceed 15 feet and the center-to-center spacing of the lights shall not exceed 5 feet.

8. OBSTRUCTION CLEARANCES.

The following restrictions apply:

a. No object will be permitted to obstruct the visibility of any approach light from the viewing window. As shown in figure 2, the viewing window is a rectangular area 100 feet above and below and 250 feet left and right of the ideal glide path at 4500 feet before the runway threshold.

b. A light plane or planes (figure 3), in which the lights of the system are located, are used for determining obstruction clearances of the approach lights. The side boundaries of the light plane are 200 feet on each side of the runway centerline extended. The end boundaries are at the runway threshold and at 200 feet before the start of the approach light system. All lines in the plane perpendicular to the centerline are level. The ideal light plane is a single horizontal plane through the runway threshold. If the 1000 feet of runway at the threshold end is sloped, the first 300 feet of the paved or stabilized area of the end zone and light plane for this area shall continue with the same slope. The final 700 feet of the paved or stabilized area may have a slope of not more than 1.5 percent up or down. From the 1000-foot crossbar to the beginning of the approach light system, the preferred light plane is horizontal and will include the 1000-foot crossbar lights. If the clearance of obstructions or terrain prohibits using a horizontal light plane, this plane may be sloped. The slope of this plane shall not exceed 2 percent up or 1.5 percent down. The preferred light plane in the area beyond the 1000-foot crossbar is a single plane, but changes in the slope of the plane are permitted. All light planes shall start and end at a light station and shall contain not less than three light stations.

c. No objects, except elevated lights of the ALSF-2 in the end zone, should be permitted to extend above the light planes within the boundaries. All railroads are considered as objects which extend 23 feet above the rails. Interstate highways are considered as objects 17 feet above the highest point of the road surface. Other highways, roads, and parking areas are considered as objects which extend 15 feet above the surface. Private or military roads are considered as objects 10 feet or higher except for airport service roads where all vehicular traffic is controlled by the airport control tower or have signs requiring stopping and visual clearance for aircraft before proceeding and prohibits parking or stopping between the signs.

d. Every effort must be made to remove or relocate objects which penetrate the light plane. For objects which cannot be moved, such as an ILS localizer, the height must be kept to a minimum and shall be located as far from the threshold as possible.

e. For objects which are not feasible to remove, lower, or relocate and cannot be cleared by the permitted slopes, a waiver may be granted (WP002 00) to exceed the slope limits.

f. Obstruction lights (WP003 10) are required on all objects protruding through the light plane with the exception of frangible-mounted elevated lights of the approach light system.

9. INSTALLATION REQUIREMENTS.

The details on design and installations of the ALSF-2 are given in ~~MIL-HDBK-1023/1 and NAVFAC P-272~~**UFC 3-535-02**. General requirements for installation are given in this WP under the discussions of each type of light.

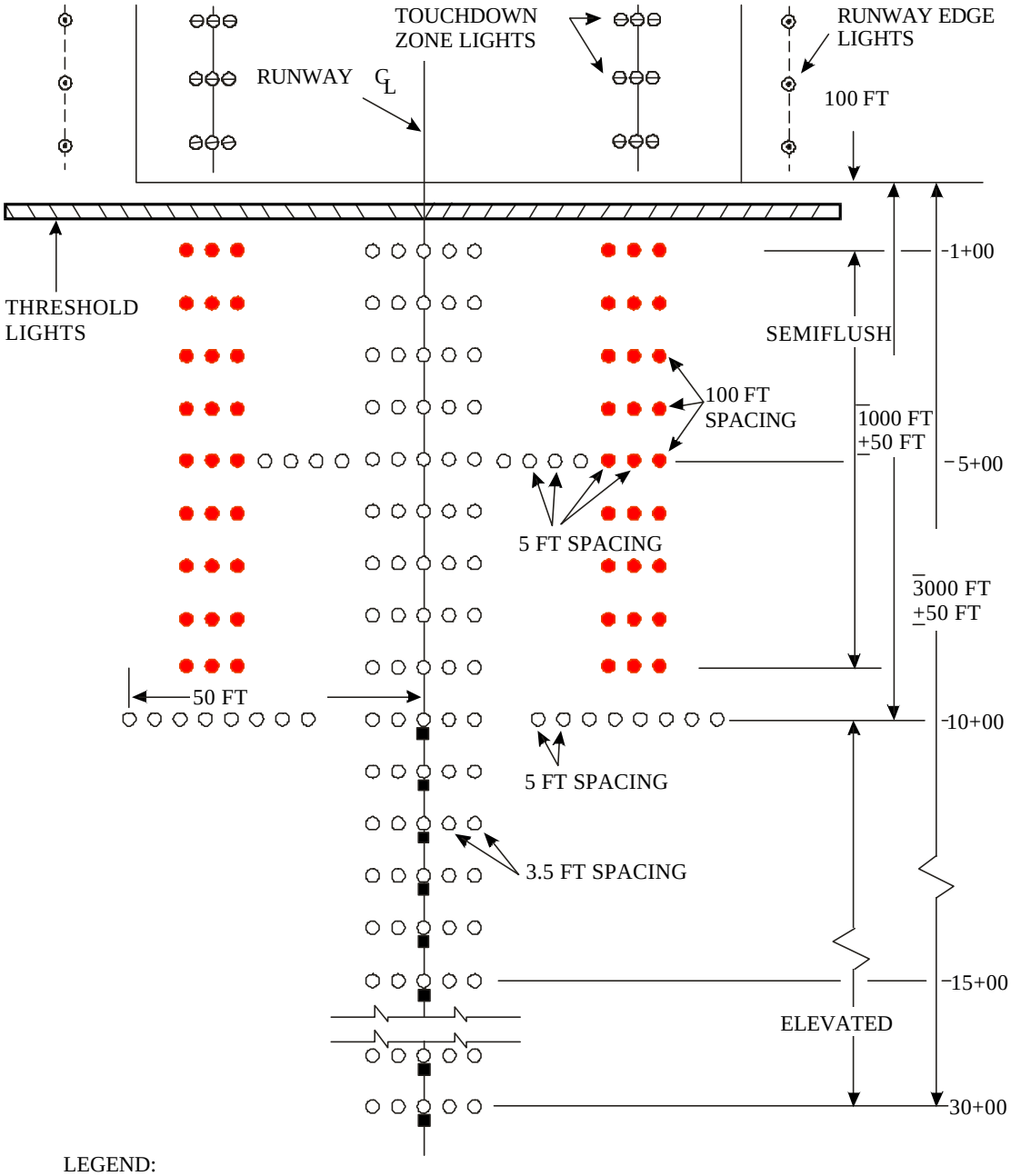

LEGEND:

- WHITE LIGHTS
- RUNWAY EDGE LIGHTS
- TOUCHDOWN ZONE LIGHTS
- RED SIDE ROW LIGHTS
- SFL

NOTE: GAUGE OF SIDE ROW LIGHTS IS 72 FT OR EQUAL TO TDZ LIGHTS IF INSTALLED.

Figure 1. Plan for approach light system, Category II - ALSF-2

DRAFT

System Component	Fixture: Quantity and Mounting	Fixture: Type and Specification[1/] FAA	Fixture: Color	Lamp: Rating and Type	Isolation Transformer: Rating	Isolation Transformer: FAA[1/] Type AC 150/5345-47
CENTERLINE LIGHTS						
Centerline Barrettes 1+00 to 9+00	45 Semiflush	L-850E [2/] AC150/5345-46	White	As determined by manufacturer	200W, 20/6.6A or 300W, 20/6.6A	L-830-7 L-830-11
Centerline Barrettes 10+00 to 30+00	105 Elevated	FAA-E-982	White	300W, 20A Q20A/PAR56	300W, 20/20A	L-830-9
Sequence Flashing Lights (SFL)	21 Elevated	FAA-E-2628 type 1, or AC 150/5345-51, type L-849, style E	Bluish-White	As determined by manufacturer	Special power unit and control	
1000-FOOT CROSSBAR						
10+00 Side Bars	16 Elevated	FAA-E-982	White	300W, 20A 20A/PAR56	300W, 20/20A	L-830-9
SIDE ROW LIGHTS						
Side Row Barrettes 1+00 to 9+00	54 Elevated		Red	500W, 20A Q20A/PAR56/1	500W, 20/20A	L-830-13
500-FOOT CROSSBAR LIGHTS						
Side Barrettes 5+00	8 Semiflush	L-850E [2/] AC150/5345-46	White	As determined by manufacturer	200W, 20/6.6A or 300W, 20/6.6A	L-830-7 or L-830-11
APPROACH THRESHOLD LIGHTS						
Center Section Threshold Bar	14 or 15 Semiflush	L-850D or E [2/] AC150/5345-46	Grn 180° Red 180°	As determined by manufacturer	200W, 20/6.6A (One or two transformers per light)	L-830-7
Outer Section Threshold Bar	8, 18, 38 [3/] Elevated	-	Grn 180° Red 180°	500W, 20A Q20A/T20/3	500W, 20/20A	L-830-13
		FAA-E-982	Green	500W, 20A Q20A/PAR56/1	500W, 20/20A	L-830-13

[1/] Either Military or FAA types may be used, but a single type for each installation is preferred.
[2/] Existing installations using MIL-L-26202 lights may continue using these lights for replacement only.
[3/] Minimum number of elevated lights for runway widths of 150', 200', and 300' respectively, with an equal number of elevated lights on each side.

TABLE 1. SCHEDULE OF LIGHTING EQUIPMENT FOR ALSF-2

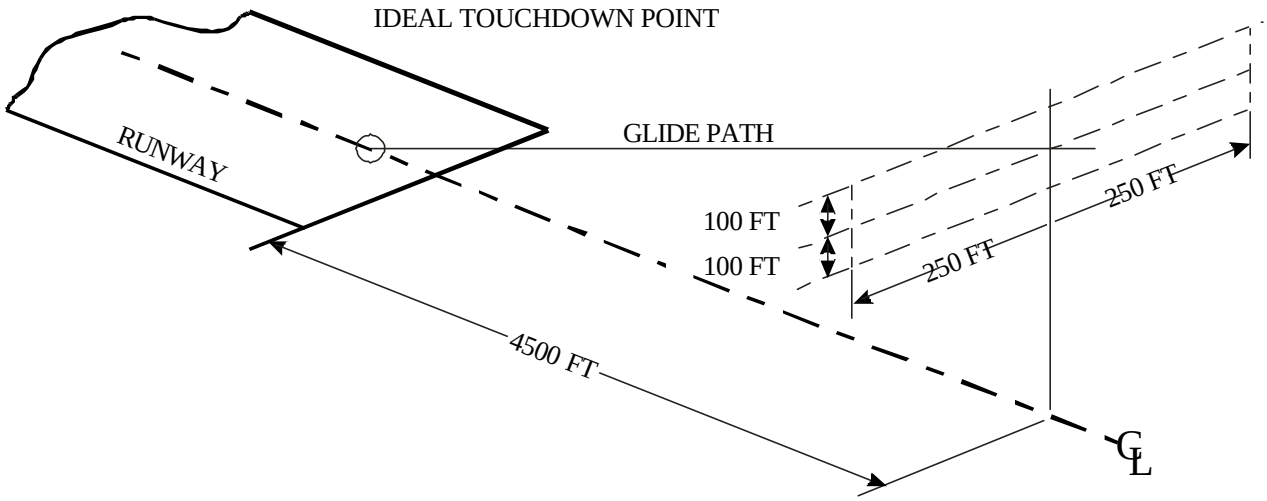

NOTE: OBSTRUCTIONS SHOULD BE CLEARED SO THAT ALL LIGHTS OF THE APPROACH PATH WILL BE VISIBLE FROM ANY POINT IN A 200 FT X 500 FT RECTANGLE, CENTERED ON THE GLIDE PATH, 4500 FT FROM THE THRESHOLD.

Figure 2. Viewing window for approach lights

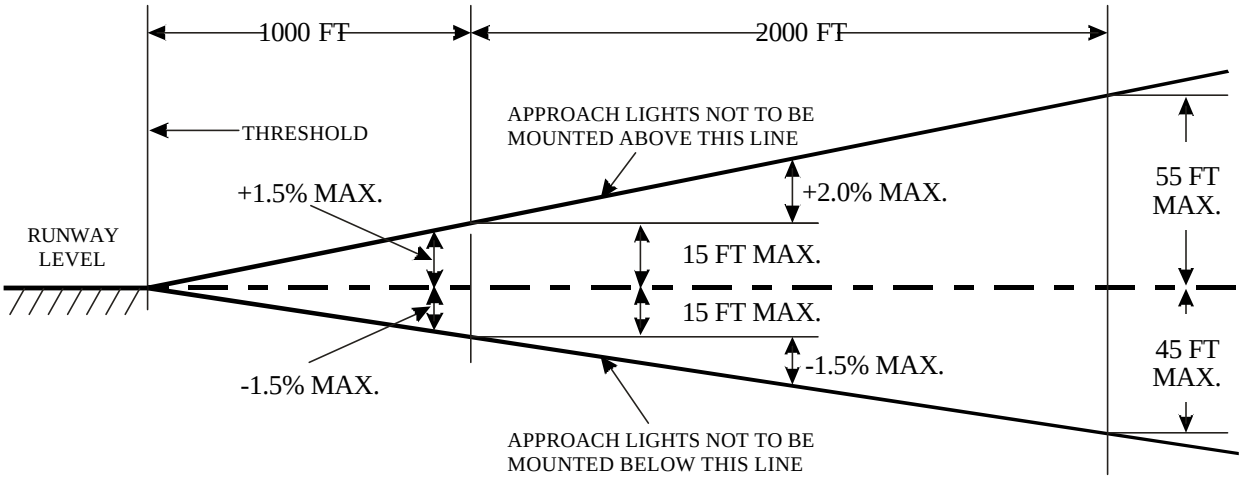

NOTE: THE BOUNDARIES OF THE LIGHT PLANES ARE THE RUNWAY THRESHOLD, 200 FT AHEAD OF THE END LIGHT STATION, AND 200 FT EACH SIDE OF CENTERLINE.

Figure 3. Light plane limits for elevations of approach lights

10. TOLERANCES.

The approved tolerances for positioning steady-burning ALSF-2 lights are as follows:

a. Lateral tolerance of a bar is ±3 inches.

b. Distance between individual light centers is ±1 inch.

c. Height for light centers up to 6 feet is ±1 inch.

d. Height for light centers between 6 and 40 is ±2 inches.

e. Height for light centers over 40 feet is ±3 inches.

f. Tolerance for vertical aiming of light units is ±1.0 degree.

g. Tolerance for horizontal aiming of light units is ±5 degrees.

h. Longitudinal tolerance for the light bar from the designated station is ±10 feet, except light bars may be displaced 50 feet to avoid omitting a barrette where obstructions cannot be removed or cleared by acceptable clearance planes. Where barrettes must be located more than 10 feet from the usual station position, the nearby barrettes may be located to provide more uniform spacing between barrettes.

11. LIGHT LOCATION IDENTIFICATION (STATION LOCATION).

Positions of the lights may be identified by station or distance. Stations are the longitudinal distances in feet into the approach zone from the runway threshold. The runway threshold is station 0+00. An item located 745 feet from the threshold would be at station 7+45. This item may be located on or off the centerline. Lateral, vertical, and some longitudinal distances are given in feet and inches.

12. AIMING CRITERIA.

The beams of all approach lights shall be aimed into the approach and away from the runway threshold (figure 1). Some approach threshold lights are bidirectional and will have the red beam (as runway end lights) aimed along the runway.

13. All lights, except bidirectional lights with toe-in, shall be aimed in azimuth with the beam axes parallel to the extended runway centerline. Some elevated threshold lights and some existing semiflush threshold lights have 3.5 to 4 degrees toe-in toward the runway centerline which shall be allowed in aiming.

14. The vertical aiming of the elevated, unidirectional, steady-burning lights shall be aimed with elevation angles in accordance with table 2. These aiming angles are based on a glide-slope angle of 3 degrees. If other glide-slope angles are used, the vertical aiming shall be adjusted for the difference. The semiflush lights and the elevated bidirectional threshold lights have fixed elevation angles for the beams. Some existing SFL may also have fixed elevation angles for the beam.

15. ACCESS FOR SERVICING.

Provisions for servicing the ALSF-2 system should be provided by such facilities as access roads, footpaths, and catwalks.

16. LIGHTING EQUIPMENT.

The lighting equipment for the ALSF-2 shall be as given in table 1 and shown in figure 1.

17. CENTERLINE LIGHTS.

18. DESCRIPTION.

The centerline lights are white, incandescent, steady-burning lights located in barrettes along the centerline of the runway. In the end zone semiflush type lights are used in paved areas but elevated lights may be used in unpaved areas. In the outer approach area including those at station 10+00, elevated type lights are used. All these centerline lights are arranged in 5-light barrettes.

19. LOCATIONS.

(See figure 1.) The centerline lights are located at 100-foot intervals from station 1+00 to the outer end of the system. The barrettes are each perpendicular to the runway centerline. The middle light of each barrette shall be centered on the extended runway centerline lights (WP004 06). This line may be offset a maximum of 24 inches to either side of the runway centerline. The barrettes may be located ±10 feet from its base station to avoid local installation problems. To avoid major obstructions such as roads, buildings, railroads, and large objects that cannot be removed, the barrette may be displaced up to 50 feet from its station. Omit the barrette if larger displacement is necessary.

NOTE

Never omit more than one consecutive barrette in sequence.

If displacement greater than the 10-foot tolerance is necessary, the adjacent barrette ahead of and behind this station may be relocated to obtain more uniform spacing.

20. INSTALLATION.

The light fixtures within the centerline barrettes shall be uniformly spaced between 40 and 42 inches apart. The

TABLE 2. ELEVATION-SETTING ANGLES FOR ALSF-2 ELEVATED UNIDIRECTIONAL LIGHTS

A. Steady-burning type MB-2 and FAA-E-982 lights

Station	Setting Angle above Horizontal* (Degrees)		Station	Setting Angle above Horizontal* (Degrees)	
	Preferred	Permitted		Preferred	Permitted
30+00	8.0	8.0	14+00	7.0	7.0
29+00	7.9	8.0	13+00	6.9	7.0
28+00	7.9	8.0	12+00	6.9	7.0
27+00	7.8	8.0	11+00	6.8	7.0
26+00	7.7	7.5	10+00	6.7	6.5
25+00	7.7	7.5	9+00	6.7	6.5
24+00	7.6	7.5	8+00	6.6	6.5
23+00	7.6	7.5	7+00	6.5	6.5
22+00	7.5	7.5	6+00	6.5	6.5
21+00	7.4	7.5	5+00	6.4	6.5
20+00	7.4	7.5	4+00	6.3	6.5
19+00	7.3	7.5	3+00	6.3	6.5
18+00	7.2	7.0	2+00	6.2	6.0
17+00	7.2	7.0	1+00	6.2	6.0
16+00	7.1	7.0	0+00	6.1	6.0
15+00	7.0	7.0			

* For approach slopes other than 3 degrees, the setting angles shall be adjusted for the difference.

B. Elevated SFL are all aimed 6 degrees above horizontal.

light-center heights shall be level. The semiflush lights shall be mounted on airport marker light bases imbedded in a concrete foundation for each barrette. The bases shall be installed to provide the proper height, horizontal aiming, and level for each light. The elevated lights shall be mounted on frangible supports and aimed vertically as shown in table 2. The mounting of the elevated lights shall be as follows:

a. For heights up to 6 feet, the support shall be mounted on a frangible coupling for each light. The support shall be conduit.

b. For light heights between 6 and 40 feet, the lights shall be mounted on low-impact-resistant support towers.

c. If the height of the lights is more than 40 feet, semifrangible supports should be used. Semifrangible supports have the top 20 feet low-impact resistant and the bottom section rigid.

21. EQUIPMENT.

The centerline lights are both elevated and semiflush incandescent light fixtures (table 1 and figures 4 and 5). For photometric requirements refer to PHOTOMETRIC REQUIREMENTS ~~this W~~**in the FAA AC for the specific light fixture**. The semiflush lights shall be installed on light bases. The frangible-mounted elevated lights use frangible couplings and the proper length of conduit. The low-

DRAFT

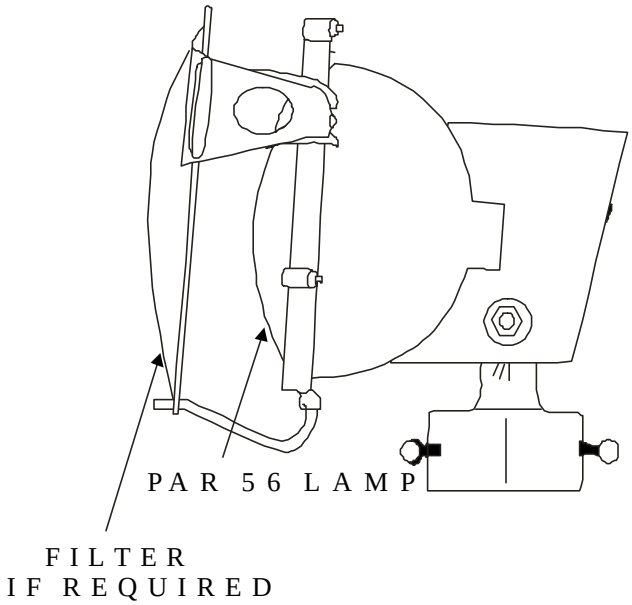

LIGHT: TYPE FAA-E-982, ELEVATED,
UNIDIRECTIONAL

TRANSFORMER: 500W, 20/20A,
FAA AC 150/5345-47, TYPE L-830-13

LOCATED AT CENTERLINE BARRETTES
STATIONS 10+00 TO 30+00 AND 1000-FT
CROSSBAR - 300W LAMPS AND ISOLATION
TRANSFORMERS; SIDE ROW BARRETTES --
500W LAMPS AND ISOLATION TRANSFORMERS

Figure 4. Typical elevated centerline, 1000-foot crossbar, side row, and threshold lights

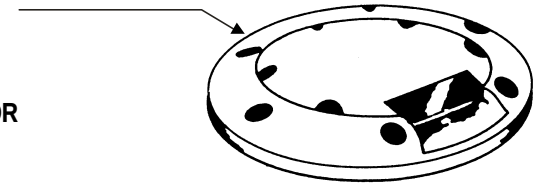

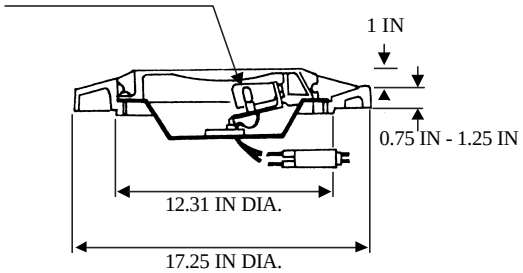

DIMENSIONS ARE FOR REFERENCE ONLY

Figure 5. Typical semiflush centerline barrette and 500-foot crossbar light, FAA L-850E

impact-resistant and semifrangible supported lights require type FAA-E-2702 fiberglass supports, type FAA-E-2690 1500-watt isolation transformers, type FAA-E-982 lampholders with failed-lamp shorting devices, and quick-disconnect cable connectors at the support base for all electrical wiring.

22. SEQUENCE FLASHING LIGHTS (SFL).

23. DESCRIPTION.

This lighting system consists of the Sequence Flashing Lights (SFL) and the master control unit. The SFL are high-intensity blue-white flashing lights usually of the condenser-discharge type. The lights are flashed in sequence starting from the outer or approach end of the system. The system flashes twice per second with an interval of 1/60 second between adjacent stations, with a pause before repeating. The standard 3000-foot ALSF-2 uses 21 elevated, unidirectional SFL. Each SFL system has a master control unit that provides power for the system, the trigger signals for the flashing sequence, and the monitoring function. The purpose of these lights is to provide early identification of the approach lighting system and centerline alignment information during final approach.

24. LOCATIONS.

One SFL unit shall be located at each centerline light barrette from station 10+00 to the outer end of the system (figure 1). These lights shall be not more than 5 feet from the centerline of the approach light system. All SFL shall be along the same line on or parallel to the centerline. If necessary the SFL may be displaced not more than 5 feet in front of the corresponding centerline barrette. The master control unit may be located in the approach lighting vault or other site and shall be not less than 200 feet from the light system centerline and shall not be an obstruction.

25. INSTALLATION.

The flasher head may be mounted as part of the unit power supply or separated to allow the proper positioning of the light. If the centerline lights are mounted on frangible or low-impact-resistant supports, the flasher heads are remotely mounted usually by the same method as are the steady-burning lights. The row of flasher heads shall be in a line in or just below the light plane. The preferred height is the same as the centerline lights for the station. The row of SFL flasher heads shall be not more than 4 feet below the elevation of the centerline lights. The flasher heads shall be aimed with the axes of the beams 6 degrees above the

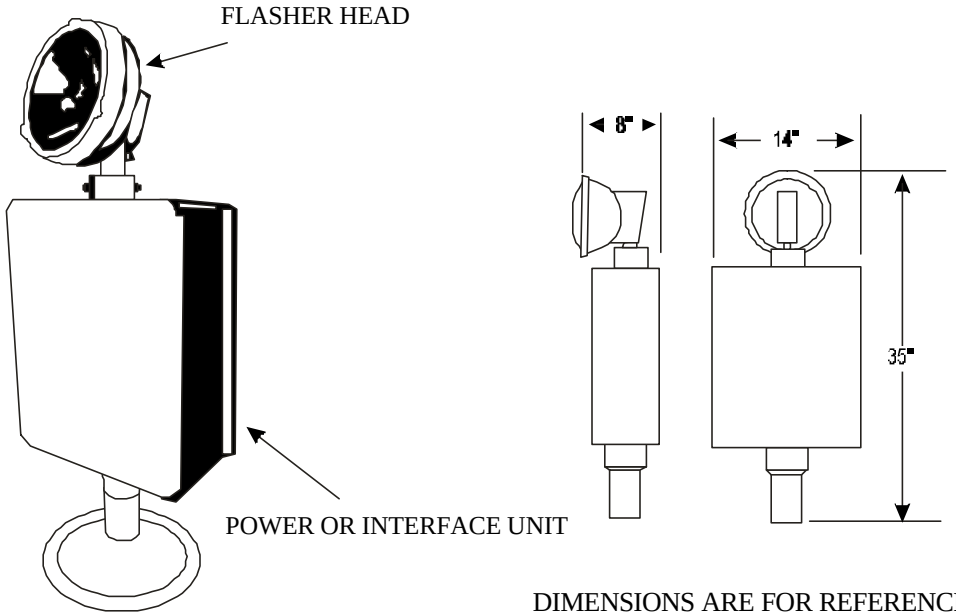

DIMENSIONS ARE FOR REFERENCE ONLY
OUTLINE DIMENSIONS

LIGHT: SEQUENCE FLASHING, ELEVATED, FAA-E-2628, OR FAA AC 150/5345-51, TYPE L-849M STYLE E.

LAMP: PAR56, FLASH TUBE, TYPE AS DETERMINED BY MANUFACTURER

POWER OR INTERFACE UNIT: TYPE AS DETERMINED BY MANUFACTURER

MASTER CONTROLLER: (NOT SHOWN) AS DETERMINED BY MANUFACTURER

LOCATION: ONE AT EACH CENTERLINE BARRETTE, STATIONS 10+00 TO 30+00

DRAFT

Figure 6. Typical sequence flashing light (SFL)

horizontal for all stations. The power supply units are usually mounted at the base of the supports for the flasher head with the cable length to be not more than 150 feet.

26. EQUIPMENT.

The sequence flashing lighting shall consist of the master control unit and 15 to 21 SFL (table 1). The SFL shall be the elevated type (figure 6) which permit the flasher heads to be located away from the power supply units. For photometric requirements refer to PHOTOMETRIC REQUIREMENTS **in the FAA AC for the specific light fixture**~~in this WP~~. The frangible-mounted SFL use frangible couplings and a proper length of conduit. The low-impact-resistant and semifrangible supported SFL shall be mounted on the same supports as the centerline lights. The wiring to these lights shall use quick-disconnect cable connectors at the base of the support. The SFL system shall provide one of three intensities as selected. The master control unit shall provide the power at the selected intensity and the trigger signal for each of the SFL. The control of the SFL shall be interlocked with the steady-burning lights so the SFL cannot operate unless the steady-burning lights are operating. Refer to APPROACH LIGHTING CONTROLS this WP.

27. 1000-FOOT CROSSBAR.

28. DESCRIPTION.

The 1000-foot crossbar consists of a bar of elevated, white, steady-burning lights on each side of the centerline light barrette at station 10+00. The purpose of this light crossbar is to indicate to the approaching pilot that the runway threshold is 1000 feet away. It also serves as a visual roll attitude reference to assist in keeping the aircraft level during final approach.

29. LOCATION.

The 1000-foot crossbar is normally located at station 10+00 (figure 1). The lights of the crossbar are located in line with the lights of the centerline barrette at this station. These lights, including the centerline lights, form a bar of lights 100 feet long that is symmetrical about the ALSF-2 system.

30. INSTALLATION.

The 1000-foot crossbar uses elevated lights only, but it is also the terminal for the end zone light plane. If the end zone light plane is too low for mounting the elevated lights, the height of the 1000-foot crossbar lights shall be at the minimum height of the fixture above the end zone plane at this station. The outer approach lighting plane shall be through the light centers of the 1000-foot crossbar lights. All lights of the 1000-foot crossbar, including the centerline barrette, shall be at the elevation of this line. The 1000-foot crossbar shall have 8 lights on each side at 5-foot spacing starting 15 feet from the approach lighting centerline (figure 1). The crossbar shall be perpendicular to the centerline. The lights shall be mounted on frangible couplings or low-impact-resistant supports. The aiming of these crossbar lights shall be the same as for the centerline barrette lights at this station.

31. EQUIPMENT.

The 1000-foot crossbar lights are elevated, white, unidirectional light fixtures (table 1 and figure 4). For photometric requirements refer to PHOTOMETRIC REQUIREMENTS this WP.

32. 500-FOOT CROSSBAR.

33. DESCRIPTION.

The 500-foot crossbar consists of a bar of semiflush, white, steady-burning lights across the centerline at station 5+00. This crossbar includes the centerline barrettes at this station. The purpose of this crossbar is to visually inform the approaching pilot that the runway threshold is 500 feet away and provide roll attitude reference. In the low visibilities for Category II and Category III condition, the 1000-foot crossbar may not be sighted or may be out of view before the threshold is visible. In addition to the centerline barrette, a four-light barrette is located on each side of the centerline barrette.

34. LOCATION.

The 500-foot crossbar is located at station 5+00 (figure 1). The lights of this crossbar are in line with the centerline barrette at this station. The four-light barrettes on each side are located midway between the centerline barrette and the side row barrettes.

35. INSTALLATION.

All lights of the 500-foot crossbar, including the centerline barrette, are semiflush lights if the end zone is paved. The elevation of these lights is the surface of the pavement or, if unpaved, in a horizontal plane. The spacing of light centers in the four-light barrettes is five feet. The line of lights in these barrettes shall be perpendicular to the centerline. The end lights of these barrettes will be 7 feet from the end light of the centerline barrette and 7 feet from the inner lights of the side row barrettes. These semiflush lights shall be mounted on light marker bases set in the concrete foundation for the barrette. The light bases shall be

oriented to direct the light beam parallel to the runway centerline. If the area is not paved, elevated lights may be used.

36. EQUIPMENT.

The lights for the four-light barrettes shall be eight semiflush, white, unidirectional fixtures (tables 1 and figure 5). These light fixtures and accessories should be the same as the centerline lights. For photometric requirements refer to PHOTOMETRIC REQUIREMENTS **in the FAA AC for the specific light fixture**~~in this WP~~. In unpaved areas, elevated light (figure 4) may be used.

37. SIDE ROW LIGHTS.

38. DESCRIPTION.

The side row lights are a row of three-light barrettes on each side of the centerline between the threshold and the 1000-foot crossbar. The barrettes are in pairs spaced at 100-foot intervals. The lights in these barrettes are elevated red lights. The purpose of the side row lights is to indicate that this area is not intended for landings and to provide transition to the touchdown zone lights. The number of lights and the spacing of lights in the barrettes and the location of the barrettes in relation to the centerline should be the same as for the Touchdown Zone Lights (TDZL) (WP004 07).

39. LOCATION.

The side row lights are in a pair of three-light barrettes at stations 1+00 through 9+00 (figure 1). The barrettes shall be in line with the centerline barrettes and symmetrical about the approach light centerline. The spacing between light centers in the barrettes shall be 5 feet. The inner lights of each pair of barrettes shall be 36 feet from the centerline, except if the TDZL are already installed, the side row lights shall be in line with the TDZL.

40. INSTALLATION.

The lights of the barrettes shall be the elevated type with 5-foot spacing between centers. The line of lights in the barrette shall be perpendicular to the centerline. The lights shall be mounted on frangible couplings which may be on light bases or conduit set in the concrete foundation. These lights may be above the light plane, but the height shall be kept at the minimum. The axes of the light beams shall be parallel to the centerline in azimuth and aimed vertically in accordance with table 2.

41. EQUIPMENT.

The fixtures are 54 elevated red, unidirectional lights as shown in table 1 and figure 4. For photometric requirements refer to PHOTOMETRIC REQUIREMENTS **in the FAA AC for the specific light fixture**~~in this WP~~. Red filters and frangible couplings are required for these lights.

42. APPROACH THRESHOLD LIGHTS.

43. DESCRIPTION.

The approach threshold lights are those threshold lights which are powered by the approach lighting circuits. These lights are located only at the approach threshold between the lines of runway threshold lights (see figure 1). These approach lights should be in line with the runway threshold lights (WP004 02 or WP004 03). The lights are unidirectional but may use bidirectional fixtures emitting green light toward the approach and red light toward the runway. Both semiflush and elevated lights are used. The purpose of the approach threshold lights is to augment the runway threshold lights for marking the beginning of the runway. The red beams of bidirectional lights serve as runway end lights to mark the rollout end of the runway for landing from the opposite direction or the beginning of the runway for taking off.

44. INSTALLATION.

The approach threshold lights shall be installed in line with the runway threshold lights. These approach threshold lights together with the runway threshold lights shall be equally spaced across the threshold between the lines of runway lights. The spacing of threshold lights shall be not more than 5 feet. Approach threshold lights shall be continuous between the runway threshold light bars and shall alternate with runway threshold lights, if needed, across the remainder of the threshold. The line of threshold lights shall be at right angles to the runway centerline. Within 36 feet of the runway centerline, semiflush lights shall be used. The semiflush lights shall be unidirectional or alternating unidirectional and bidirectional. At light positions 36 feet or more from the centerline, the lights may be elevated or semiflush types. The semiflush lights shall be mounted on light bases with the top of the base below the runway surface as recommended by the manufacturer. The lights shall be level with the axes of the beams parallel in azimuth to the runway centerline. The elevated lights shall be

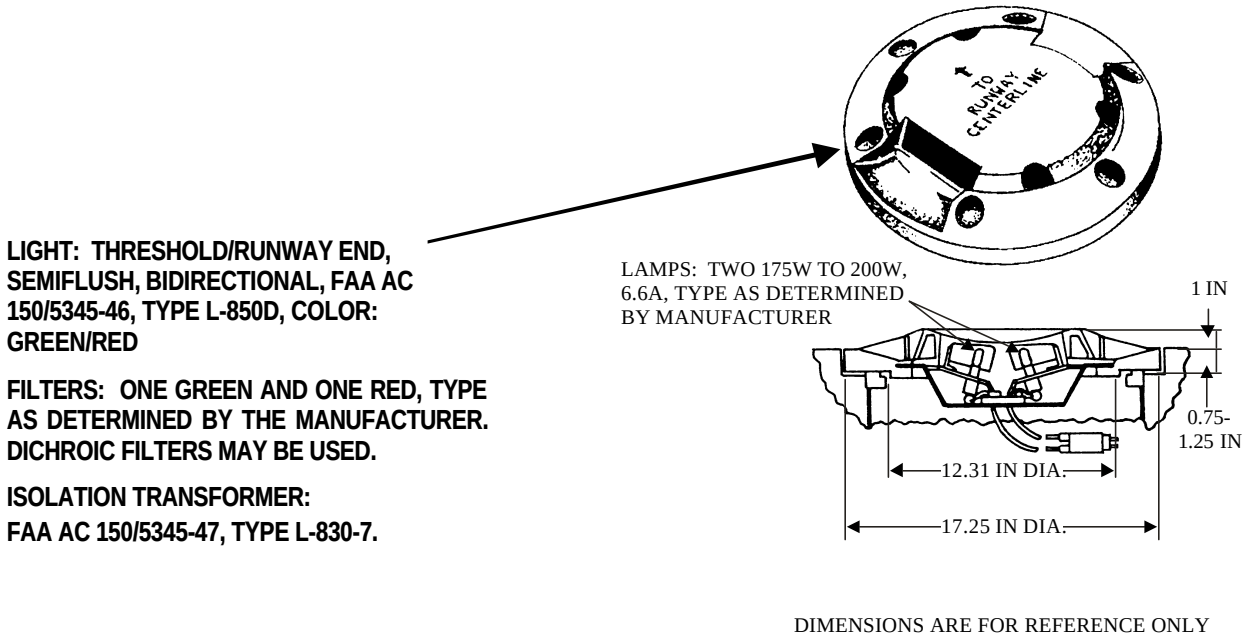

DIMENSIONS ARE FOR REFERENCE ONLY

A. BIDIRECTIONAL LIGHT

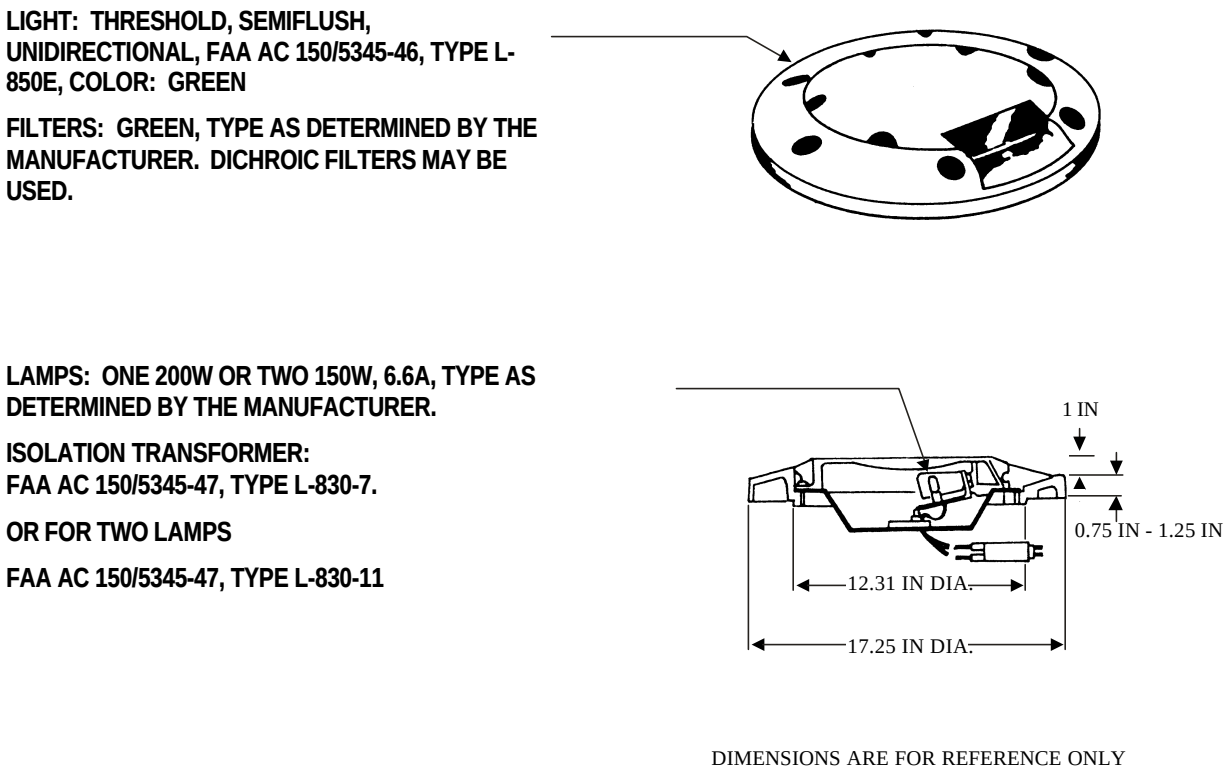

DIMENSIONS ARE FOR REFERENCE ONLY

B. UNIDIRECTIONAL LIGHT

Figure 7. Typical semiflush approach threshold lights, type FAA L-850D or L-850E

DRAFT

LIGHT: THRESHOLD ELEVATED, BIDIRECTIONAL, MIL-L-26990 TYPE MB-1, GREEN/RED

LAMP: 500W, 20A, TYPE Q20A/T20/3

FILTER: GREEN 180°, RED 180°

ISOLATION TRANSFORMER: FAA AC 150/5345-47 TYPE L-830-13

LOCATED AT APPROACH THRESHOLD BAR - OUTER SECTIONS OF INBOARD LIGHTS

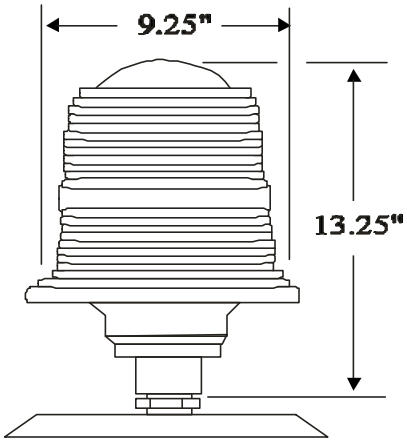

DIMENSIONS ARE FOR REFERENCE ONLY

Figure 8. Typical bidirectional, elevated approach threshold light, type MB-1

mounted on frangible couplings and leveled and may be unidirectional or bidirectional types. If the type of lights used have the toe-in, the toe-in of these lights shall be towards the runway centerline with equal angles for both beams. The elevated lights may extend above the light plane, but the height shall be not more than the minimum mounting height for the fixtures.

45. EQUIPMENT.

The approach threshold lights are as required in table 1. There shall be approximately 15 semiflush lights (figure 7), but semiflush lights may be used instead of elevated type lights. If bidirectional lights are used, green filters are required for the threshold light beams and red filters for the beams toward the runway. Dichroic filters may be used. The lamps are the type determined by the manufacturer. The number of elevated lights will vary with the width of the runway but for a 200-foot wide runway approximately 18 additional lights are required. These elevated lights may be either unidirectional lights (figure 4) or bidirectional lights (figure 8). The bidirectional elevated lights shall have green filters for the beam toward the approach zone and red filters toward the runway. Unidirectional lights shall have green filters. These elevated lights shall be mounted on frangible couplings.

46. PHOTOMETRIC REQUIREMENTS.

47. All the approach lights shall be unidirectional lights except the inboard threshold lights may be bidirectional lights as combination threshold and runway end lights. The axes of the beams shall be parallel to the runway centerline in azimuth, except the elevated inboard threshold lights, if bidirectional, may be toed-in towards the runway centerline at not more than 4.5 degrees. For elevation of the beam axis, refer to AIMING CRITERIA, this WP. The color of the emitted lights shall be in accordance with ~~Specification~~ **ICAO, Annex 14, Vol. 1, App. 1**~~MIL-C-25050~~ as follows:

a. Centerline and 500-foot and 1000-foot crossbar lights - aviation white,

b. Side row lights - aviation red,

c. Threshold lights - aviation green,

d. Sequence flashing lights (SFL) - white or bluish-white which may not meet aviation white requirements.

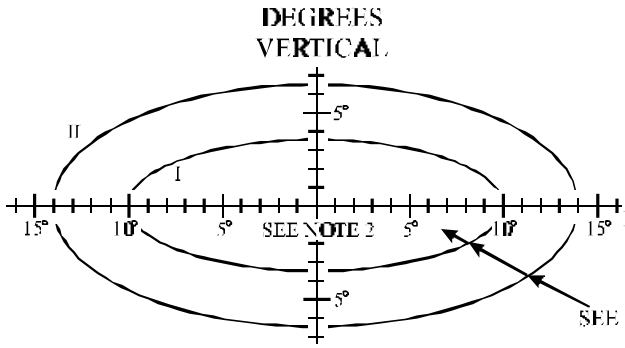

A. ELEVATED APPROACH LIGHTS; CENTERLINE 300M (1000FT) CROSSBAR (STA 10+00 TO 30+00)

	I=50%	II=10%
a	10.0°	14.0°
b	5.0°	6.5°

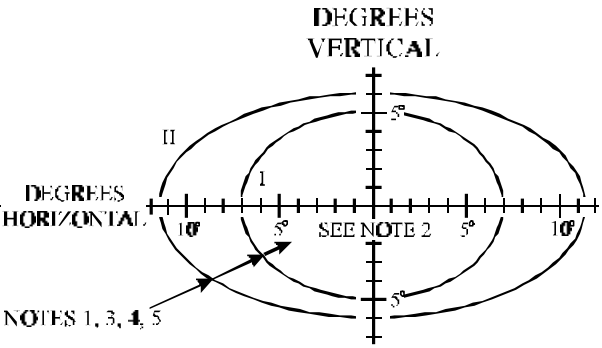

B. SEMIFLUSH WHITE OR RED APPROACH LIGHTS; CENTERLINE OR SIDE ROW (STA 1+00 TO 9+00)

	I=50%	II=10%
a	7.0°	11.5°
b	5.0°	6.0°

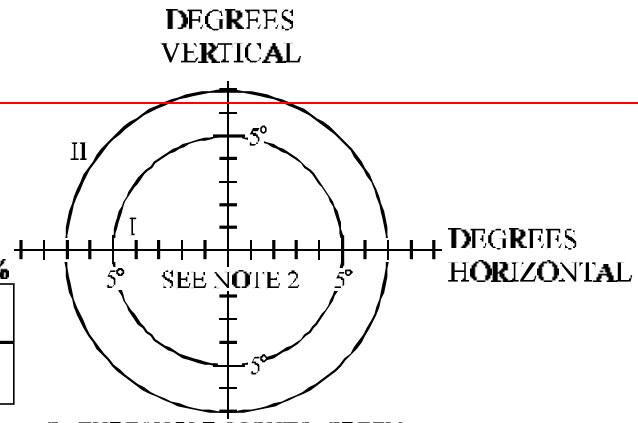

	I=50%	II=10%
a	5.5°	7.5°
b	4.5°	6.0°

C. THRESHOLD LIGHTS; GREEN, ELEVATED OR SEMIFLUSH

NOTES:

1. ALL CONTOURS ARE ELLIPSES CALCULATED BY EQUATION $\frac{X^2}{a^2} + \frac{Y^2}{b^2} = 1$
2. THE MINIMUM AVERAGE INTENSITY OF THE MAIN BEAM (INSIDE CONTOUR I) IS 20,000 CD FOR WHITE, OR 5000 CD FOR RED.
3. MAXIMUM INTENSITY SHOULD NOT EXCEED 1.5 TIMES ACTUAL AVERAGE INTENSITY.
4. MINIMUM INTENSITY OF I–50% AND II–10% OF REQUIRED MAIN BEAM INTENSITY.
5. FOR SEMIFLUSH UNITS, THE PORTION OF LIGHT CUT OFF BY THE MOUNTING SURFACE MAY BE DISREGARDED.

~~Figure 9. Photometric intensity-distribution requirements of steady-burning high-intensity approach lights~~

DRAFT

48. Intensity Of Steady-Burning Lights.

The intensity of these lights shall be variable in five steps of 100, 20, 4, 0.8, and 0.2 percent of rated intensity for the steady burning lights. ~~The intensity beamspread for these lights at rated current shall be as shown in figure 9. The average intensity of the main beam shall be the arithmetic mean of all points inside contour I on a uniform grid with points not more than one degree apart for each coordinate axis.~~

49. Intensity of SFL.

The intensities of these lights shall be progressively variable in three steps of 100, 10, and 2 percent of the rated intensity of the SFL. Each SFL light at the rated intensity setting shall provide an effective intensity of not less than 15,000 candelas at the following five points: the beam axis, plus and minus 15 degrees horizontally, and plus and minus 5 degrees vertically. ~~The effective intensity is determined by the equation:~~

$$\cancel{OI_e = \frac{\int_{t_1}^{t_2} I\,dt}{0.2 + t_2 - t_1}}$$

~~where~~ ~~I_e is the effective intensity,~~

~~I is the instantaneous intensity, and~~

~~t_1 and t_2 are the times in seconds of the beginning and end of that part of the flash when the value of I exceeds I_e. The choice of times t_1 and t_2 maximizes the value of I_e.~~

The SFL system shall flash twice per second with the duration of the effective portion of the flash between 250 and 5500 microseconds. The SFL shall flash sequentially towards the runway thresholds at intervals of 1/60 second between adjacent lights.

50. POWER AND CONTROLS.

51. POWER SOURCES.

The primary source of power for the ALSF-2 approach light system is usually from commercial electrical power sources via appropriate distribution transformers (WP009 00). Since the use of the approach lights is critical for air operations, a secondary or emergency power source is provided (WP009 01). This usually is an engine-generator set. An automatic transfer, which switches to the emergency power source in less than one second when the primary power source fails, shall be provided. This power transfer time may be accomplished by using the secondary power source to energize the airfield lights during Category II or III conditions which with power failure shall transfer to the primary source in 1 second.

52. SYSTEM POWER.

The ALSF-2 incandescent steady-burning lights are powered by four series circuits (~~figure 10~~**figure 9**). Each series circuit consists of a constant-current regulator, power cables, and isolation transformers. The constant-current regulators (WP009 02) shall be 30KW or 50KW size with 5-step intensity settings. These regulators shall be located in the regulator room of the approach lighting vault. The cables shall be types appropriate for overhead and underground installation. Lights shall be equipped with series isolation transformers of the proper type. The light circuits may be interleaved to provide lights throughout the system if one circuit should become inoperative. Power to the SFL shall be from the primary or emergency source through suitable distribution transformers and the master control unit. Multiple type circuits supply the power to each light (WP009 04).

53. APPROACH LIGHTING CONTROLS.

The ALSF-2 approach lights shall be remotely controlled from the airfield lighting control panel (WP009 05) in the air traffic control tower and from the approach lighting vault. The steady-burning lights are controlled as one unit for operating the lights and for selecting any of five intensity settings. The sequence flashing lights have a separate control for switching but can be operated only when the steady-burning lights are operating. The three intensity settings shall also be interlocked with the steady-burning light intensity as follows:

a. The SFL shall be on high intensity only if the steady-burning lights are on intensity steps 4 or 5..

b. The SFL shall be on medium intensity only if the steady-burning lights are on intensity step 3.

c. The SFL shall be on low intensity only if the steady-burning lights are on steps 1 or 2.

DRAFT

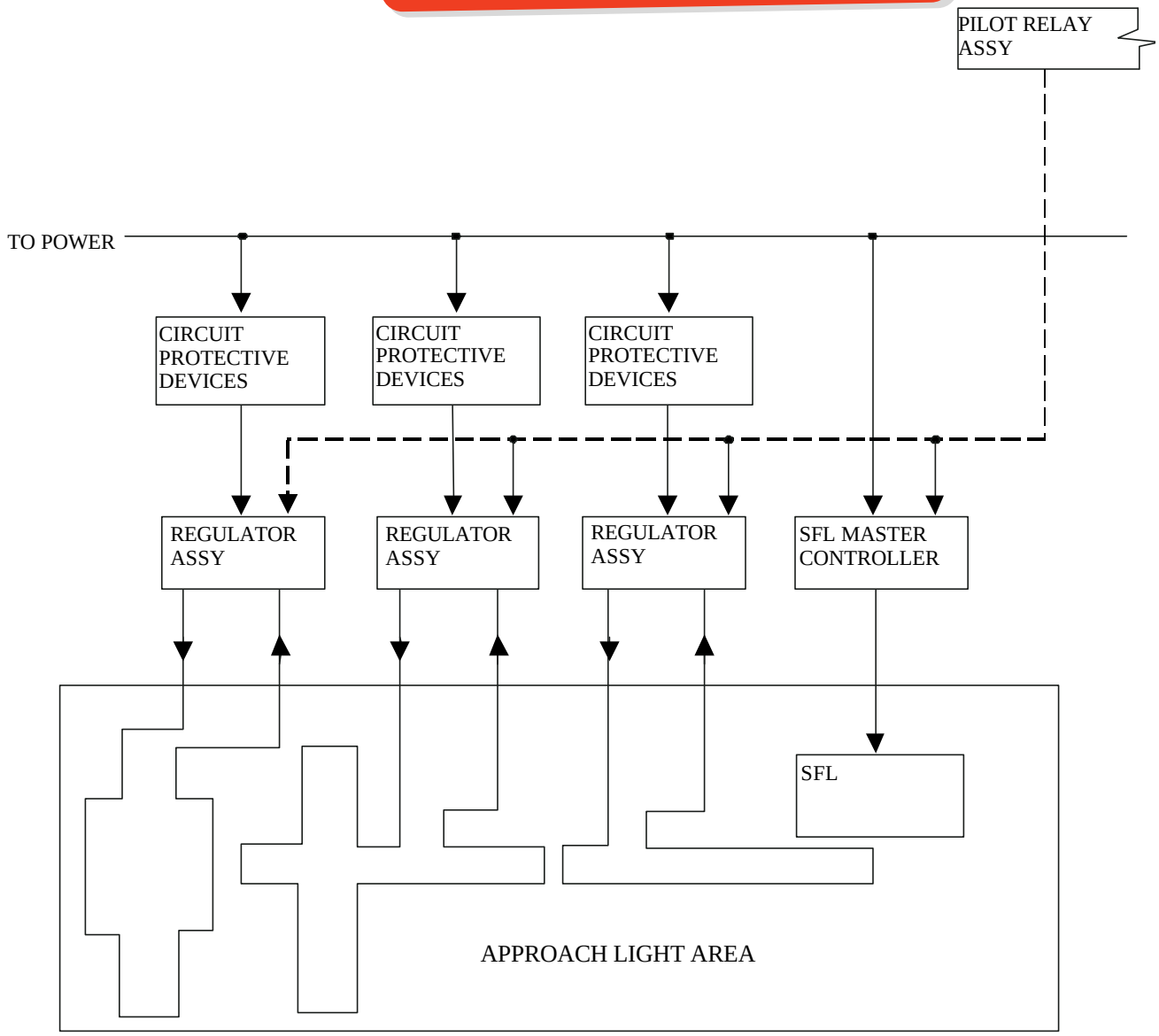

~~Figure 10~~**Figure 9**. Block diagram - approach light circuits for ALSF-2

54. APPROACH LIGHTING VAULT.

Each ALSF-2 approach light system should be provided with an approach lighting vault to house the power and control equipment. This vault should have three or more compartments containing the following:

a. The lighting control compartment.

b. The generator room with the emergency engine-generator set and the automatic power transfer equipment.

a. The regulator room with the constant-current regulators, distribution transformers, and major switching components. The size of this room should allow space for additional regulators and equipment.

The SFL master control unit may be located in the regulator room or it may be located separately at a more convenient location.

DRAFT

TECHNICAL MANUAL

SHORT APPROACH LIGHT SYSTEM (SALS)

SHOREBASED AIRFIELDS

Reference Material

Introduction 002 00
~~Definitive Designs for Naval Shore Facilities ..... NAVFAC P-272~~
Approach Visual Aids 003 00
Approach Lights, Category I - ALSF-1 ..... 003 06
Approach Lights, Category II and Category III - ALSF-2 ..... 003 07
Obstruction Lights 003 10
Runway Markings 004 01
Runway Threshold Lights 004 02
Displaced Threshold Lights and Markings 004 03
Runway End Lights 004 04
High-Intensity Runway Edge Lights (HIRL) 004 05
Runway Centerline Lights (RCL) 004 06
Electrical Power and Control for Visual Aids 009 00
Auxiliary Power and Power Transfer Equipment 009 01
Constant-Current Regulators 009 02
Special Power Supplies 009 04
Airfield Lighting Control Panels 009 05
PAR-56 Lampholder FAA-E-982
Design Drawings for Visual Air Navigation Facilities ..... UFC 3-535-02
~~Airfield Lighting ..... MIL-HDBK-1023/1~~
Sequence Flashing Lighting System, Elevated and Semiflush with Dimming and Monitoring FAA-E-2628
Isolation Transformer for High-Intensity Approach Light Systems (1500 Watts) FAA-E-2690
Low-Impact-Resistant Approach Light Supports FAA-E-2702
Terminal Instrument Procedures (TERPS) ..... OPNAV Inst. 3722.16
Aeronautical Ground Light and Surface Marking Colors ..... ICAO, Annex 14, Vol. 1, App. 1
Light, Marker, Airport Approach, High Intensity, Type MB-1 ..... MIL-L-26990
Specification for Runway and Taxiway Light Fixtures ..... FAA AC 150/5345-46
Isolation Transformers for Airport Lighting Systems ..... FAA AC 150/5345-47
Specification for Discharge-Type Flashing Light Equipment ..... FAA AC 150/5345-51

DRAFT

Alphabetical Index

Subject **Page No.**

Access For Servicing. 8
Aiming Criteria. 8
Approach Lighting Controls 19
Approach Lighting Vault. 19
Approach Threshold Lights 14
Associated Facilities. 3
Barrette. 4
Centerline Lights 8
Centerline Lights Description. 8

Centerline Lights Equipment....11
Centerline Lights Installation....9
Centerline Lights Locations....9
Constant-Current Regulators....19
Controls....19
Elevation-Setting Angles for SALS Elevated Unidirectional Lights....9
Engine-Generator Set....19
Existing Installations....4
Frangible Supports....9
General Information....4
Installation Requirements....8
Intensity of Steady-Burning Lights....16
Interleaving....19
Introduction....3
Justification Requirements....3
Light Location Identification....8
Light Planes....4
Lighting Equipment....8
Master Control Unit....13
Obstruction Clearances....4
Obstruction Lights....8
1000-Foot Crossbar....13
1000-Foot Crossbar Description....13
1000-Foot Crossbar Equipment....13
1000-Foot Crossbar Installation....13
1000-Foot Crossbar Location....13
~~Photometric Requirements....16~~
Power And Controls....19
Power Sources....19
Power Transfer Equipment....19
Prethreshold Wing Bar Lights....14
Purpose....3
Regulators....19
Schedule Of Lighting Equipment For SALS....6
Sequence Flashing Lights (SFL)....11
SFL Description....11
SFL Equipment....13
SFL Installation....13
SFL Locations....11
Station Locations....8
Supports for Lights....9
System Description....4
System Power....19
Terminating Bar....13
Terminating Bar Description....13
Terminating Bar Equipment....14
Terminating Bar Installation....14
Terminating Bar Location....13
Threshold Lights....14
Threshold Lights Description....14
Threshold Lights Equipment....16
Threshold Lights Installation....14
Tolerances....8

DRAFT

Type Of Project. 4
Vault 19
Wing Bar Lights 14
Wing Bar Lights Description/Location 14
Wing Bar Lights Equipment 14
Wing Bar Lights Installation. 14

DRAFT

Record of Applicable Technical Directives

None

1. INTRODUCTION.

2. PURPOSE.

This Work Package (WP) contains the requirements for the centerline Short Approach Light System (SALS). The SALS may be installed where there is a requirement for a high-intensity visual approach system when it is not practical to install a standard Approach Light System, Category I ALSF-1 (WP003 06) or Category II ALSF-2 (WP003 07). The length of the SALS system shall be between 2300 feet and 1500 feet measured from the runway threshold. The SALS provides guidance for operations in Visual Flight Rules (VFR) and some Instrument Flight Rules (IFR) conditions (WP002 00). The SALS does not provide the standard approach visual aids requirements to qualify for Category I operations (WP003 00). However, approach visibility minimums of 4000 feet Runway Visual Range (RVR) or less with precision electronic approach aids may be permitted. Refer to OPNAV Inst. 3722.16. This system provides the visual direction and roll guidance for alignment of the aircraft with the runway and final corrections before landing at night and during low visibility weather conditions. Approval of plans or requests for deviations shall be processed as directed in WP002 00.

3. JUSTIFICATION REQUIREMENTS.

Any runway that is equipped with a precision electronic approach aid such as a precision Instrument Landing System (ILS), Microwave Landing System (MLS), or Precision Approach Radar (PAR) but where an ALSF-1 is not practical should qualify for a SALS. The SALS may be used for approaches without precision electronic aids (WP003 00) if approved by Naval Air Systems Command. Criteria to be considered for obtaining approval for a SALS include:

a. Mission requirements for operations in restricted visibility conditions.

b. The frequency of occurrence of IFR conditions.

c. Terrain features in the approach areas that do not provide adequate visual guidance or produce misleading or deceptive cues to the pilots.

d. Fixed objects or hazards near the approach path or runway end that could endanger aircraft deviating from the approach course or undershooting the runway.

4. ASSOCIATED FACILITIES.

In addition to the electronic approach aids, other airfield facilities required for use with the SALS should include the following:

a. The runway should be paved and not less than 150 feet wide. The runway length shall not be less than 6000 feet, but shorter runway lengths may be approved for special operating conditions.

b. The runway should be equipped with the following:

(1) Precision approach instrument runway markings (WP004 01),

(2) High-intensity runway edge lights (HIRL) (WP004 05),

(3) High-intensity threshold lights (WP004 02),

(4) Runway end lights (WP004 04).

c. The approach should have a paved or stabilized end zone area extending 1000 feet into the approach area and not less than the width of the runway. The first 300 feet of this paved or stabilized area should have the same slope as the first 1000 feet of the runway. The remainder of the paved or stabilized area may have a slope of not more than ±1.5 percent.

d. The runway may have an RVR system.

e. If approved, the runway may be equipped with runway centerline lights (WP004 06) or displaced threshold lights (WP004 03).

f. Air traffic control should be provided during normal operating hours.

5. TYPE OF PROJECT.

These requirements for the SALS shall apply for new installations; however, these requirements should apply for projects that replace or upgrade existing SALS approach light systems. Existing equipment that is in excess of these requirements may be removed. As an example, remove the sequence-flashing lights in the end zone area.

6. GENERAL INFORMATION.

7. SYSTEM DESCRIPTION.

The SALS is a system of light bars and barrettes in the approach zone immediately ahead of the runway threshold. The length of a SALS is 1500 to 2300 feet where terrain or other local conditions prevent an ALSF-1 installation. The plan of the SALS is shown in figure 1 and the schedule of lighting equipment is given table 1. The SALS consists of centerline light barrettes, sequence flashing lights, 1000-foot crossbar, terminating bar, prethreshold wing bars, and threshold lights. A barrette is three or more lights closely spaced in a transverse line so that from a distance they appear as a single short illuminated bar. For the SALS, the length of a barrette shall not exceed 15 feet and the center-to-center spacing of the lights shall not exceed 5 feet.

8. OBSTRUCTION CLEARANCES.

The following restrictions apply:

a. No object will be permitted to obstruct the visibility of any approach light from the viewing window. As shown in figure 2, the viewing window is a rectangular area 100 feet above and below and 250 feet left and right of the ideal glide path at 4500 feet before the runway threshold.

b. A light plane or planes (figure 3), in which the lights of the system are located, are used for determining obstruction clearances of the approach lights. The side boundaries of the light plane are 200 feet on each side of the runway centerline extended. The end boundaries are at the runway threshold and at 200 feet before the start of the approach light system. All lines in the plane perpendicular to the centerline are level. The ideal light plane is a single horizontal plane through the runway threshold. If the 1000 feet of runway at the threshold end is sloped, the first 300 feet of the paved or stabilized area of the end zone and light plane for this area shall continue with the same slope. The final 700 feet of the paved or stabilized area may have a slope of not more than 1.5 percent up or down. From the 1000-foot crossbar to the beginning of the approach light system, the preferred light plane is horizontal and will include the 1000-foot crossbar lights. If the clearance of obstructions or terrain prohibits using a horizontal light plane, this plane may be sloped. The slope of this plane shall not exceed 2 percent up or 1.5 percent down. The preferred light plane in the area beyond the 1000-foot crossbar is a single plane, but changes in the slope of the plane are permitted. All light planes shall start and end at a light station and shall contain not less than three light stations.

c. No objects except elevated lights of the SALS in the end zone, should be permitted to extend above the light planes within the boundaries. All railroads are considered as objects which extend 23 feet above the rails. Interstate highways are considered as objects 17 feet above the highest point of the road surface. Other highways, public roads, and parking areas are considered as objects which extend 15 feet above the surface. Private or military roads are considered as objects 10 feet or higher except for airport service roads where all vehicular traffic is controlled by the airport control tower or have signs requiring stopping and visual clearance for aircraft before proceeding and prohibits parking or stopping between the signs.

d. Every effort must be made to remove or relocate objects which penetrate the light plane. For objects which cannot be moved, such as an ILS localizer, the height must be kept to a minimum and shall be located as far from the threshold as possible.

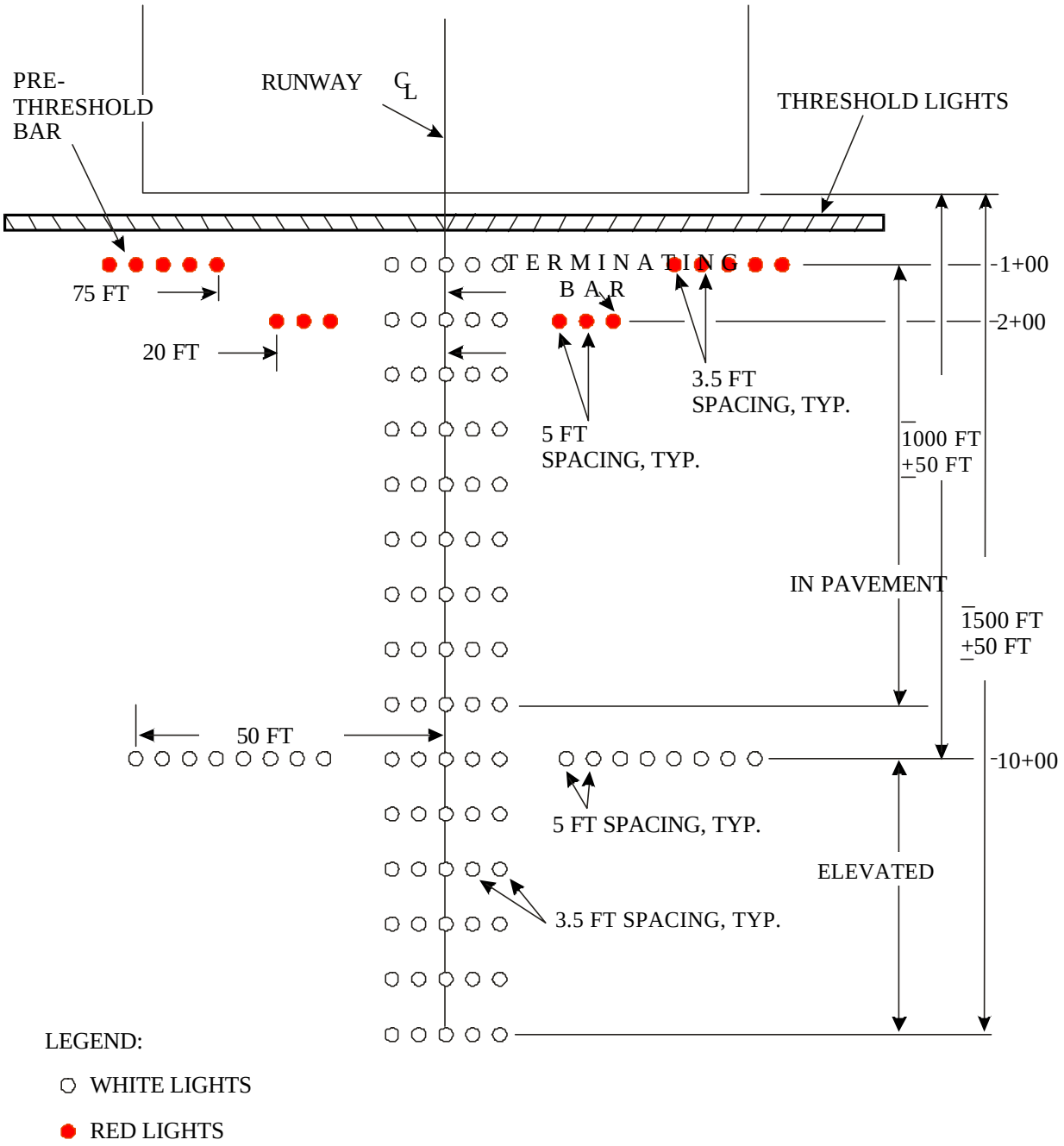

Figure 1. Plan for approach light system, SALS

DRAFT

TABLE 1. Schedule of lighting equipment for SALS

System Component	Fixture: Quantity and Mounting	Fixture: Type and Specification[1/] FAA	Fixture: Color	Lamp: Rating and Type	Isolation Transformer[1/]: Rating	Isolation Transformer[1/]: FAA Type AC 150/5345-47
CENTERLINE LIGHTS						
Centerline Barrettes 1+00 to 9+00	45 Semiflush	L-850E [2/] AC150/5345-46	White	As determined by manufacturer	200W, 20/6.6A 300W, 20/6.6A	L-830-7 L-830-11
Centerline Barrettes 10+00 - 15+00 or 23+00	30 to 70 Elevated	FAA-E-982	White	300W, 20A Q20A/PAR56	300W, 20/20A	L-830-9
Sequence Flashing Lights (SFL)	6 to 14 Elevated	FAA-E-2628, type 1, or FAA AC 150/ 5345-51, type L-849, style E	Bluish-White	As determined by manufacturer	Special power unit and control	
1000-FOOT CROSSBAR						
10+00 Side Bars	16 Elevated	FAA-E-982	White	300W, 20A 20A/PAR56	300W, 20/20A	L-830-9
TERMINATING BAR LIGHTS						
Side Barrettes 2+00	6 Elevated	FAA-E-982	Red	500W, 20A Q20A/PAR56/1	500W, 20/20A	L-830-13
PRETHRESHOLD WING BAR						
Side Barrettes 1+00	10 Elevated	FAA-E-982	Red	500W, 20A Q20A/PAR56/1	500W, 20/20A	L-830-13
APPROACH THRESHOLD LIGHTS						
Center Section Threshold Bar	7 or 8 Semiflush (optional)	L-850D [2/] AC150/5345-46	Grn 180° Red 180°	As determined by manufacturer	One or two 200W, 20/6.6A	L-830-7
Outer Section Threshold Bar	0, 4, 14 [3/] Elevated	-	Grn 180° Red 180°	500W, 20A Q20A/T20/3	500W, 20/20A	L-830-13
		FAA-E-982	Green	500W, 20A Q20A/PAR56/1	500W, 20/20A	L-830-13

[1/] Either Military or FAA types may be used, but a single type for each installation is preferred.
[2/] Existing installations using MIL-L-26202 lights may continue using these lights for replacement only.
[3/] Minimum number of elevated lights for runway widths of 150', 200', and 300' respectively, with an equal number of elevated lights on each side.

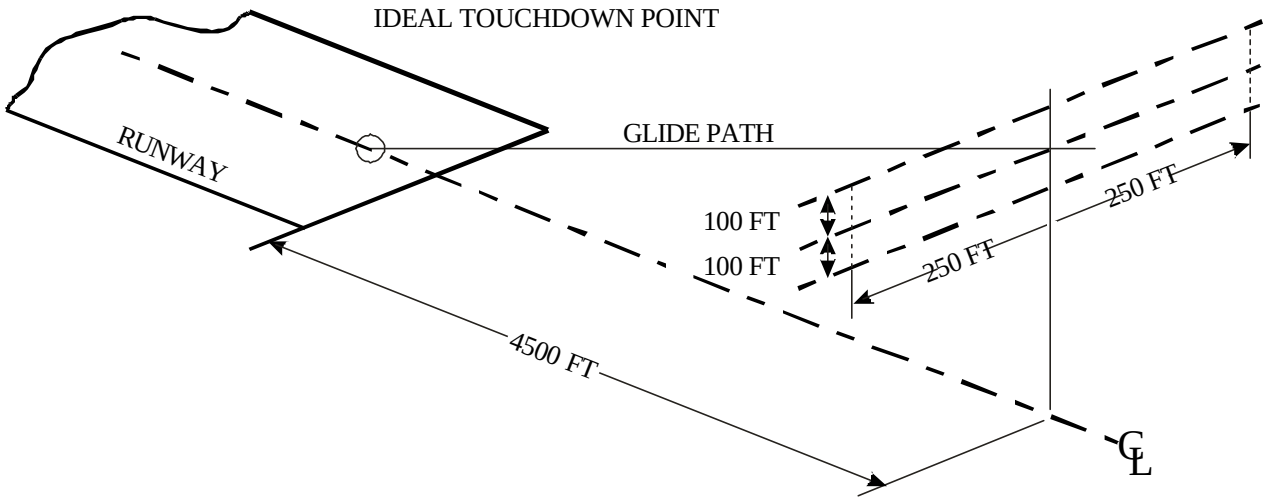

NOTE: OBSTRUCTIONS SHOULD BE CLEARED SO THAT ALL LIGHTS OF THE APPROACH PATH WILL BE VISIBLE FROM ANY POINT IN A 200 FT X 500 FT RECTANGLE, CENTERED ON THE GLIDE PATH, 4500 FT FROM THE THRESHOLD.

Figure 2. Viewing window for approach lights

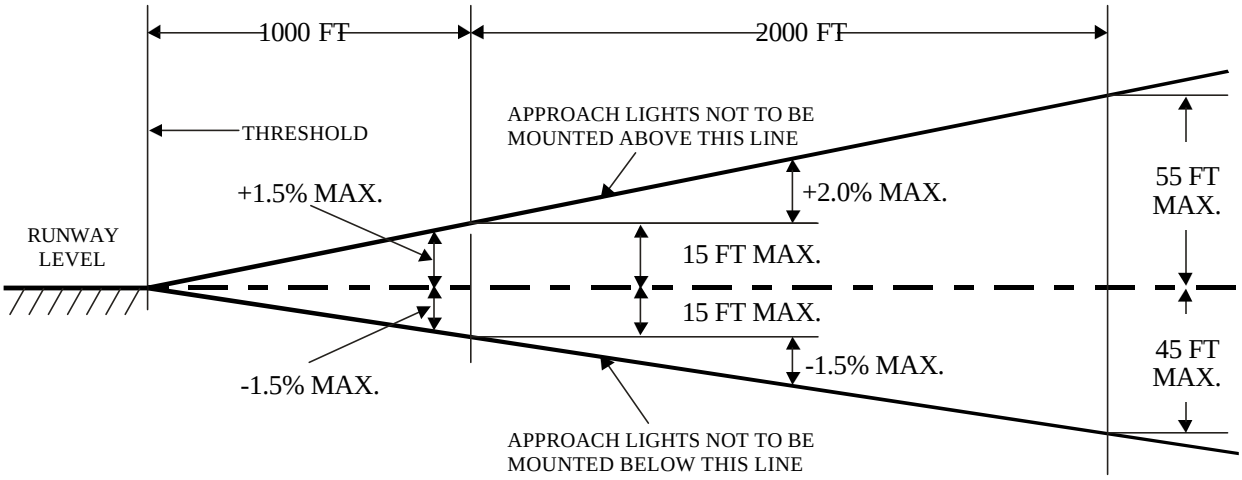

NOTE: THE BOUNDARIES OF THE LIGHT PLANES ARE THE RUNWAY THRESHOLD, 200 FT AHEAD OF THE END LIGHT STATION, AND 200 FT EACH SIDE OF CENTERLINE.

Figure 3. Light plane limits for elevations of approach lights

a. For objects which are not feasible to remove, lower, or relocate and cannot be cleared by the permitted slopes, a waiver may be granted (WP002 00) to exceed the slope limits.

b. Obstruction lights (WP003 10) are required on all objects protruding through the light plane with the exception of frangible-mounted elevated lights of the approach light system.

9. INSTALLATION REQUIREMENTS.

For the details on design and installations of the SALS, refer to ~~MIL-HDBK-1023/1 and NAVFAC P-272~~**UFC 3-535-02**. General requirements for installation are given in this WP under the discussions of each type of light.

10. TOLERANCES.

The approved tolerances for positioning steady-burning SALS lights are as follows:

a. Lateral tolerance of a bar is ±3 inches.

b. Distance between individual light centers is ±1 inch.

c. Height for light centers up to 6 feet is ±1 inch.

d. Height for light centers between 6 and 40 is ±2 inches.

e. Height for light centers over 40 feet is ±3 inches.

f. Tolerance for vertical aiming of light units is ±1.0 degree.

g. Tolerance for horizontal aiming of light unit is ±5 degrees.

h. Longitudinal tolerance for the light bar from the designated station is ±10 feet, except light bars may be displaced 50 feet to avoid omitting a barrette where obstructions cannot be removed or cleared by acceptable clearance planes. Where barrettes must be located more than 10 feet from the usual station position, the nearby barrettes may be located to provide more uniform spacing between barrettes.

11. LIGHT ~~LOCATION~~ IDENTIFICATION (STATION LOCATION).

Positions of the lights may be identified by station or distance. Stations are the longitudinal distances in feet into the approach zone from the runway threshold. The runway threshold is station 0+00. An item located 745 feet from the threshold would be at station 7+45. This item may be located on or off the centerline. Lateral, vertical, and some longitudinal distances are given in feet and inches.

12. AIMING CRITERIA.

The beams of all approach lights shall be aimed into the approach and away from the runway threshold (figure 1). Some approach threshold lights are bidirectional and will have the red beam (as runway end lights) aimed along the runway.

13. All lights, except bidirectional lights with toe-in, shall be aimed in azimuth with the beam axes parallel to the extended runway centerline. Some elevated threshold lights and some existing semiflush threshold lights have 3.5 to 4 degrees toe-in toward the runway centerline which shall be allowed in aiming.

14. The vertical aiming of the elevated, unidirectional, steady-burning lights shall be aimed with elevation angles in accordance with table 2. These aiming angles are based on a glideslope angle of three degrees. If other glideslope angles are used, the vertical aiming shall be adjusted for the difference. The semiflush lights and the elevated bidirectional threshold lights have fixed elevation angles for the beams. Some existing SFL may also have fixed elevation angles for the beam.

15. ACCESS FOR SERVICING.

Provisions for servicing the SALS system should be provided by such facilities as access roads, footpaths, and catwalks.

16. LIGHTING EQUIPMENT.

The lighting equipment for the SALS shall be as given in table 1 and shown in figure 1.

17. CENTERLINE LIGHTS.

18. DESCRIPTION.

The centerline lights are white, incandescent, steady-burning lights located in barrettes along the centerline of the runway. In the end zone semiflush type lights are used in paved areas but elevated lights may be used in unpaved areas. In the outer approach area including those at station 10+00, elevated type lights are used. All these centerline lights are arranged in 5-light barrettes.

TABLE 2. ELEVATION-SETTING ANGLES FOR SALS ELEVATED UNIDIRECTIONAL LIGHTS

A. Steady-burning type MB-2 and FAA-E-982 lights

Station	Setting Angle above Horizontal* (Degrees)		Station	Setting Angle above Horizontal* (Degrees)	
	Preferred	Permitted		Preferred	Permitted
23+00	7.6	7.5	11+00	6.8	7.0
22+00	7.5	7.5	10+00	6.7	6.5
21+00	7.4	7.5	9+00	6.7	6.5
20+00	7.4	7.5	8+00	6.6	6.5
19+00	7.3	7.5	7+00	6.5	6.5
18+00	7.2	7.0	6+00	6.5	6.5
17+00	7.2	7.0	5+00	6.4	6.5
16+00	7.1	7.0	4+00	6.3	6.5
15+00	7.0	7.0	3+00	6.3	6.5
14+00	7.0	7.0	2+00	6.2	6.0
13+00	6.9	7.0	1+00	6.2	6.0
12+00	6.9	7.0	0+00	6.1	6.0

* For approach slopes other than 3 degrees, the setting angles shall be adjusted for the difference.

B. Elevated SFL are all aimed 6 degrees above horizontal.

19. LOCATIONS.

(See figure 1.) The centerline lights are located at 100-foot intervals from station 1+00 to the outer end of the system. The barrettes are each perpendicular to the runway centerline. The middle light of each barrette shall be centered on the runway centerline, except if the runway has or will be equipped with runway centerline lights. The middle light will be on a line with the runway centerline lights (WP004 06). This line may be offset a maximum of 24 inches to either side of the runway centerline. The barrettes may be located ±10 feet from its base station to avoid local installation problems. To avoid major obstructions such as roads, buildings, railroads, and large objects that cannot be removed, the barrette may be displaced up to 50 feet from its station. Omit the barrette if larger displacement is necessary.

If displacement greater than the 10-foot tolerance is necessary, the adjacent barrette ahead of and behind this station may be relocated to obtain more uniform spacing.

20. INSTALLATION.

The light fixtures within the centerline barrettes shall be uniformly spaced between 40 and 42 inches apart. The light-center heights shall be level. The semiflush lights shall be mounted on airport marker light bases imbedded in a concrete foundation for each barrette. The bases shall be installed to provide the proper height, horizontal aiming, and level for each light. The elevated lights shall be mounted on frangible supports and aimed vertically as shown in table 2. The mounting of the elevated lights shall be as follows:

a. For heights up to 6 feet, the support shall be mounted on a frangible coupling for each light. The support shall be conduit.

b. For light heights between 6 and 40 feet, the lights shall be mounted on low-impact-resistant support towers.

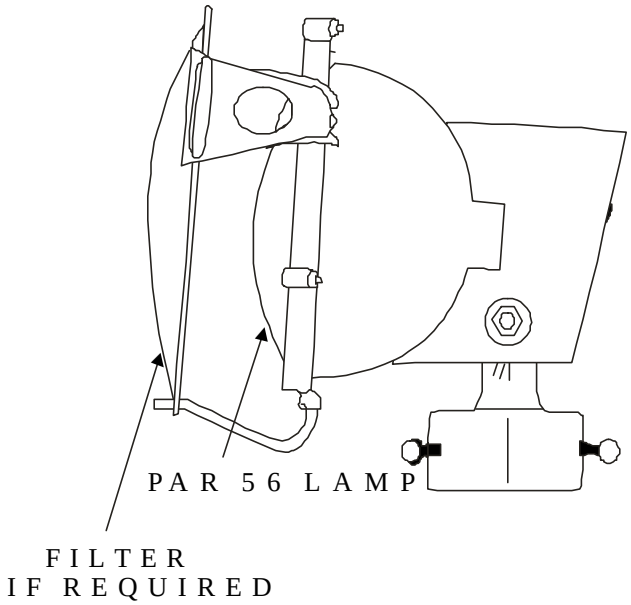

LIGHT: TYPE FAA-E-982, ELEVATED, UNIDIRECTIONAL

ISOLATION TRANSFORMER: 500W, 20/20A, FAA AC 150/5345-47, TYPE L-830-13

LOCATED AT CENTERLINE BARRETTES STATIONS 10+00 TO 30+00 AND 1000-FT CROSSBAR - 300W LAMPS AND ISOLATION TRANSFORMERS; OUTER TERMINATING BARRETTES AND PRETHRESHOLD BAR BARRETTES -- 500W LAMPS AND ISOLATION TRANSFORMERS

Figure 4. Typical elevated centerline, 1000-foot crossbar, terminating bar and prethreshold lights.

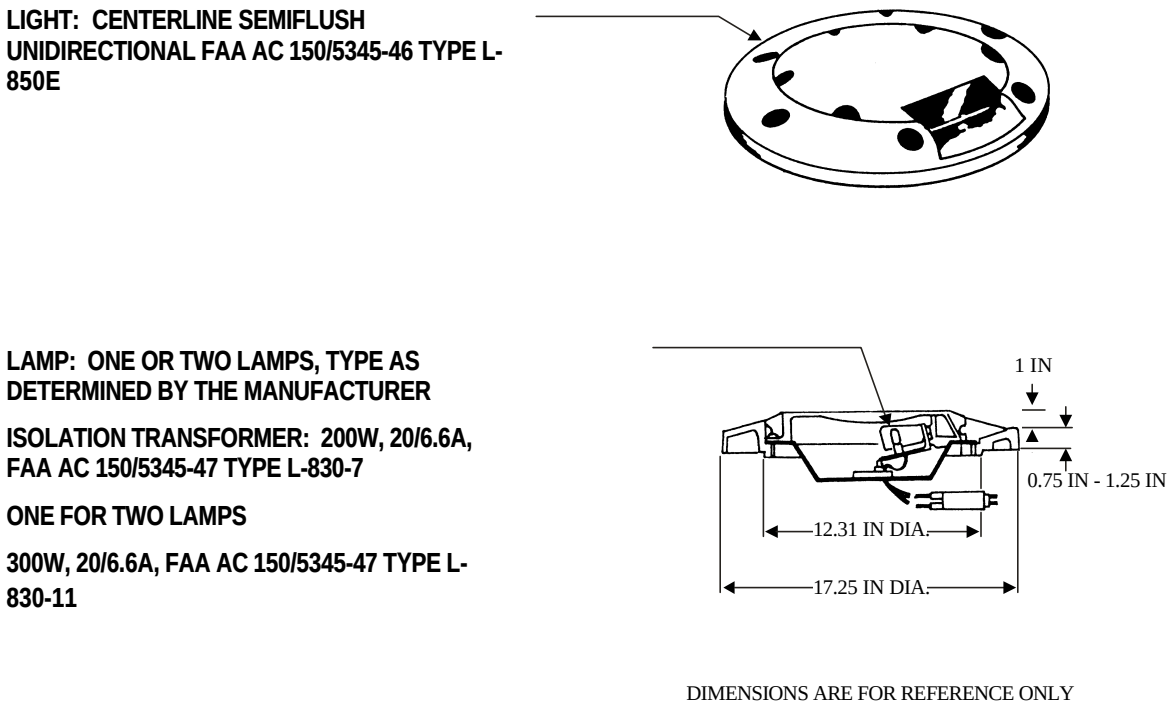

Figure 5. Typical semiflush centerline barrette light and 500-foot crossbar light, FAA L-850E

a. If the height of the lights is more than 40 feet, semifrangible supports should be used. Semifrangible supports have the top 20 feet low-impact resistant and the bottom section rigid.

21. EQUIPMENT.

The centerline lights use both elevated and semiflush incandescent light fixtures (table 1 and figures 4 and 5). For photometric requirements refer to PHOTOMETRIC REQUIREMENTS the WP. The semiflush lights shall be installed on light bases. The frangible-mounted elevated lights use frangible couplings and the proper length of conduit. The low-impact-resistant and semifrangible supported lights require type FAA-E-2702 fiberglass supports, type FAA-E-2690 1500-watt isolation transformers, type FAA-E-982 lampholders with failed-lamp shorting devices, and quick-disconnect cable connectors at the support base for all electrical wiring.

22. SEQUENCE FLASHING LIGHTS (SFL).

23. DESCRIPTION.

This lighting system consists of the Sequence Flashing Lights (SFL) and the master control unit. The SFL are high-intensity blue-white flashing lights usually of the capacitance-discharge type. The lights are flashed in sequence starting from the outer or approach end of the system. The system flashes twice per second with an interval of 1/60 second between adjacent stations and a pause before repeating. The SALS uses 6 to 14 elevated, unidirectional SFL. Each SFL system has a master control unit that provides power for the system, the trigger signals for the flashing sequence, and the monitoring function. The purpose of these lights is to provide early identification of the approach lighting system and centerline alignment information during final approach.

24. LOCATIONS.

One SFL unit shall be located at each centerline light barrette from station 10+00 to the outer end of the system (figure 1). These lights shall be not more than 5 feet from the centerline of the approach light system. All SFL shall be along the same line on or parallel to the centerline. If necessary the SFL may be displaced not more than 5 feet in front of the corresponding centerline barrette. The master control unit may be located in the approach lighting vault or other site and shall be not less than 200 feet from the light system centerline and shall not be an obstruction.

DRAFT

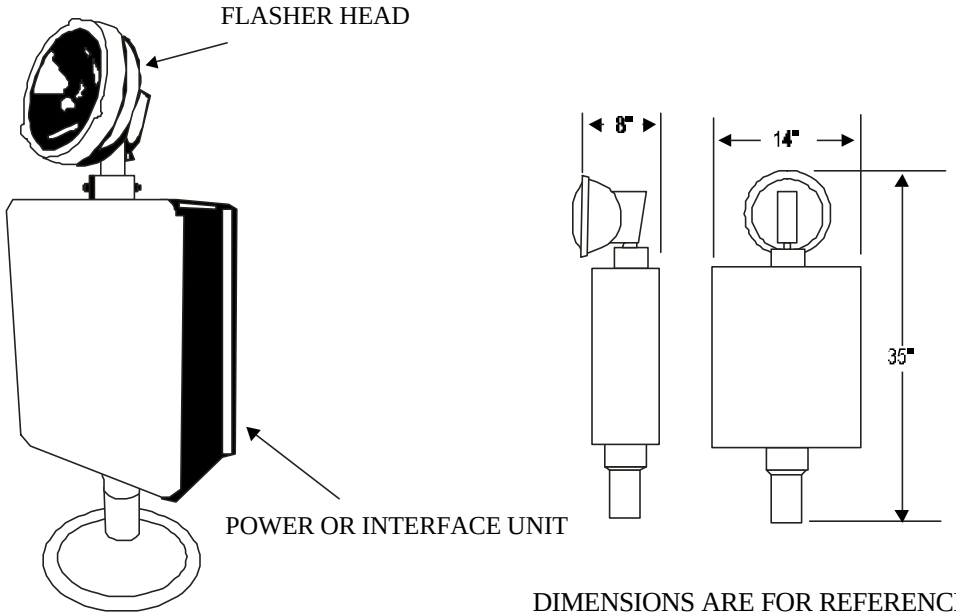

DIMENSIONS ARE FOR REFERENCE ONLY
OUTLINE DIMENSIONS

LIGHT: SEQUENCE FLASHING, ELEVATED, FAA-E-2628, OR FAA AC 150/5345-51, TYPE L-849M STYLE E.

LAMP: PAR56, FLASH TUBE, TYPE AS DETERMINED BY MANUFACTURER

POWER OR INTERFACE UNIT: TYPE AS DETERMINED BY MANUFACTURER

MASTER CONTROLLER: (NOT SHOWN) AS DETERMINED BY MANUFACTURER

LOCATION: ONE AT EACH CENTERLINE BARRETTE, STATIONS 10+00 TO 30+00

Figure 6. Typical sequence flashing light (SFL)

DRAFT

25. INSTALLATION.

The flasher head may be mounted as part of the unit power supply or separated to allow the proper positioning of the light. If the centerline lights are mounted on frangible or low-impact-resistant supports, the flasher heads are remotely mounted usually by the same method as are the steady-burning lights. The row of flasher heads shall be in a line in or just below the light plane. The preferred height is the same as the centerline lights for the station. The row of SFL flasher heads shall be not more than 4 feet below the elevation of the centerline lights. The flasher heads shall be aimed with the axes of the beams six degrees above the horizontal for all stations. The power supply units are usually mounted at the base of the supports for the flasher head with the cable length to be not more than 150 feet.

26. EQUIPMENT.

The sequence flashing lighting shall consist of the master control unit and 6 to 14 SFL (table 1). The SFL shall be the elevated type (figure 6) which permit the flasher heads to be located away from the power supply units. For photometric requirements refer to PHOTOMETRIC REQUIREMENTS ~~in this Wp~~**listed in the FAA AC for the specific fixture**. The frangible-mounted SFL use frangible couplings and a proper length of conduit. The low-impact-resistant and semifrangible supported SFL shall be mounted on the same supports as the centerline lights. The wiring to these lights shall use quick-disconnect cable connectors at the base of the support. The SFL system shall provide one of three intensities as selected. The master control unit shall provide the power at the selected intensity and the trigger signal for each of the SFL. The control of the SFL shall be interlocked with the steady-burning lights so the SFL cannot operate unless the steady-burning lights are operating. Refer to APPROACH LIGHTING CONTROLS this WP.

27. 1000-FOOT CROSSBAR.

28. DESCRIPTION.

The 1000-foot crossbar consists of a bar of elevated, white, steady-burning lights on each side of the centerline light barrette at station 10+00. The purpose of this light crossbar is to indicate to the approaching pilot that the runway threshold is 1000 feet away. It also serves as a visual roll attitude reference to assist in keeping the aircraft level during final approach.

29. LOCATION.

The 1000-foot crossbar is normally located at station 10+00 (figure 1). The lights of the crossbar are located in line with the lights of the centerline barrette at this station. These lights, including the centerline lights, form a bar of lights 100 feet long that is symmetrical about the SALS system.

30. INSTALLATION.

The 1000-foot crossbar uses elevated lights only, but it is also the terminal for the end zone light plane. If the end zone light plane is too low for mounting the elevated lights, the height of the 1000-foot crossbar lights shall be at the minimum height of the fixture above the end zone plane at this station. The outer approach lighting plane shall be through the light centers of the 1000-foot crossbar lights. All lights of the 1000-foot crossbar, including the centerline barrette, shall be at the elevation of this line. The 1000-foot crossbar shall have 8 lights on each side at 5-foot spacing starting 15 feet from the approach lighting centerline (figure 1). The crossbar shall be perpendicular to the centerline. The lights shall be mounted on frangible couplings or low-impact-resistant supports. The aiming of these crossbar lights shall be the same as for the centerline barrette lights at this station.

31. EQUIPMENT.

The 1000-foot crossbar lights are elevated, white, unidirectional light fixtures (table 1 and figure 4). For photometric requirements refer to PHOTOMETRIC REQUIREMENTS **listed in the FAA AC for the specific fixture**~~in this WP~~.

32. TERMINATING BAR.

33. DESCRIPTION.

The terminating bar lights indicate the end of the approach light system and start the transition to the runway light system. The red side-barrette lights are used to show that the area is unsafe for touchdown. This bar also serves as a visual roll attitude reference to assist the pilot in keeping the aircraft level. The centerline barrette is part of the centerline lights, but also forms part of the terminating bar.

34. LOCATION.

The terminating bar lights are 200 feet into the approach area at station 2+00 (figure 1). The 5-light barrette across the approach lighting centerline is part of the centerline lights. The innermost lights of the 3-light

barrettes shall be 36 feet from the centerline of the approach light system.

35. INSTALLATION.

The 3-light barrettes on each side of the centerline shall be elevated lights with 5-foot spacings, and the light centers may be at the minimum height above the end zone light plane. The lights of the 3-light barrettes shall have the beams parallel to the runway centerline in azimuth and shall be aimed vertically as shown in table 2 for this station.

36. EQUIPMENT.

The lights are red, unidirectional, elevated lights (table 1). These lights are shown in figure 4. These lights shall use red filters. For photometric requirements refer to PHOTOMETRIC REQUIREMENTS **listed in the FAA AC for the specific fixture**~~in this WP~~. Frangible couplings are required for these lights.

37. PRETHRESHOLD WING BAR LIGHTS.

38. DESCRIPTION/LOCATION.

The prethreshold wing bar lights (also called wing bar lights) are located 100 feet into the approach zone (station 1+00) from the runway threshold. The two bars consist of 5-light barrettes with a barrette on each side of the centerline. The inner light of each barrette shall be 75 feet from the centerline.

39. INSTALLATION.

The prethreshold wing bar lights shall be in a line perpendicular to the approach light centerline with the lights spaced at 3.5-foot intervals (figure 1). These elevated lights may be above the light plane to avoid having part of the light below the surface of the blast pad. The height of the lights above the light plane shall be not more than the minimum mounting height of the fixture. These lights shall have the beams parallel to the runway centerline in azimuth and shall be aimed vertically as shown in table 2.

40. EQUIPMENT.

The prethreshold wing bar lights are red, elevated, unidirectional light fixtures (table 1). These light are shown in figure 4. For photometric requirements refer to PHOTOMETRIC REQUIREMENTS **listed in the FAA AC for the specific fixture**~~this WP~~. Frangible couplings are required for mounting these lights.

41. APPROACH THRESHOLD LIGHTS.

42. DESCRIPTION.

The approach threshold lights are those threshold lights which are powered by the approach lighting circuits. These lights are located only at the approach threshold between the lines of runway threshold lights (see figure 1). These approach lights should be in line with the runway threshold lights (WP004 02 or WP004 03). The lights are unidirectional but may use bidirectional fixtures emitting green light toward the approach and red light toward the runway. Both semiflush and elevated lights are used. The purpose of the approach threshold lights is to augment the runway threshold lights for marking the beginning of the runway. The red beams of bidirectional lights serve as runway end lights to mark the rollout end of the runway for landings from the opposite direction or the beginning of the runway for taking off.

43. INSTALLATION.

The approach threshold lights shall be installed in line with the runway threshold lights. The approach threshold lights shall be equally spaced between the innermost lights of the runway threshold lights except a gate 35 feet each side of the runway centerline may be without lights. The spacing shall be not more than 10 feet. The line of threshold lights shall be at right angles to the runway centerline. If approach threshold lights are installed in the center section gate, unidirectional semiflush lights shall be used. At light positions 36 feet or more from the centerline, the lights may be elevated or semiflush types. The semiflush lights shall be mounted on light bases with the top of the base below the runway surface as recommended by the manufacturer. The lights shall be level with the axes of the beams parallel in azimuth to the runway centerline. The elevated lights shall be mounted on frangible couplings and leveled and may be unidirectional or bidirectional types. If the type of lights used have the toe-in, the toe-in of these lights shall be towards the runway centerline with equal angles for both beams. The elevated lights may extend above the light plane, but the height shall be not more than the minimum mounting height for the fixtures.

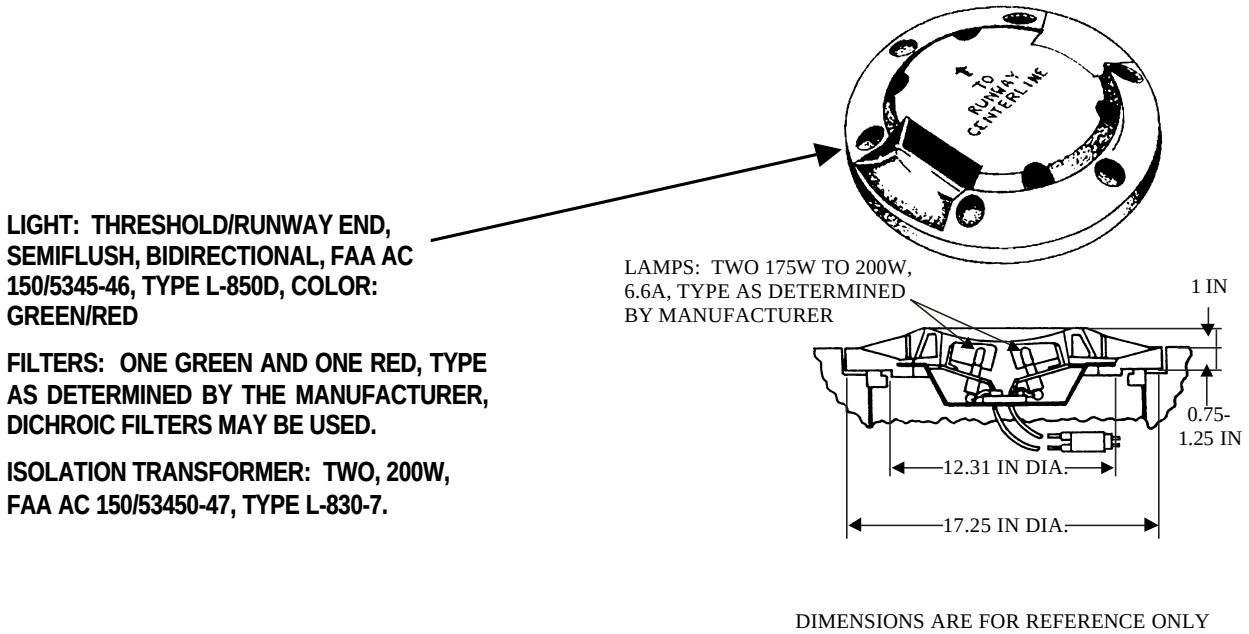

DIMENSIONS ARE FOR REFERENCE ONLY

A. BIDIRECTIONAL LIGHT

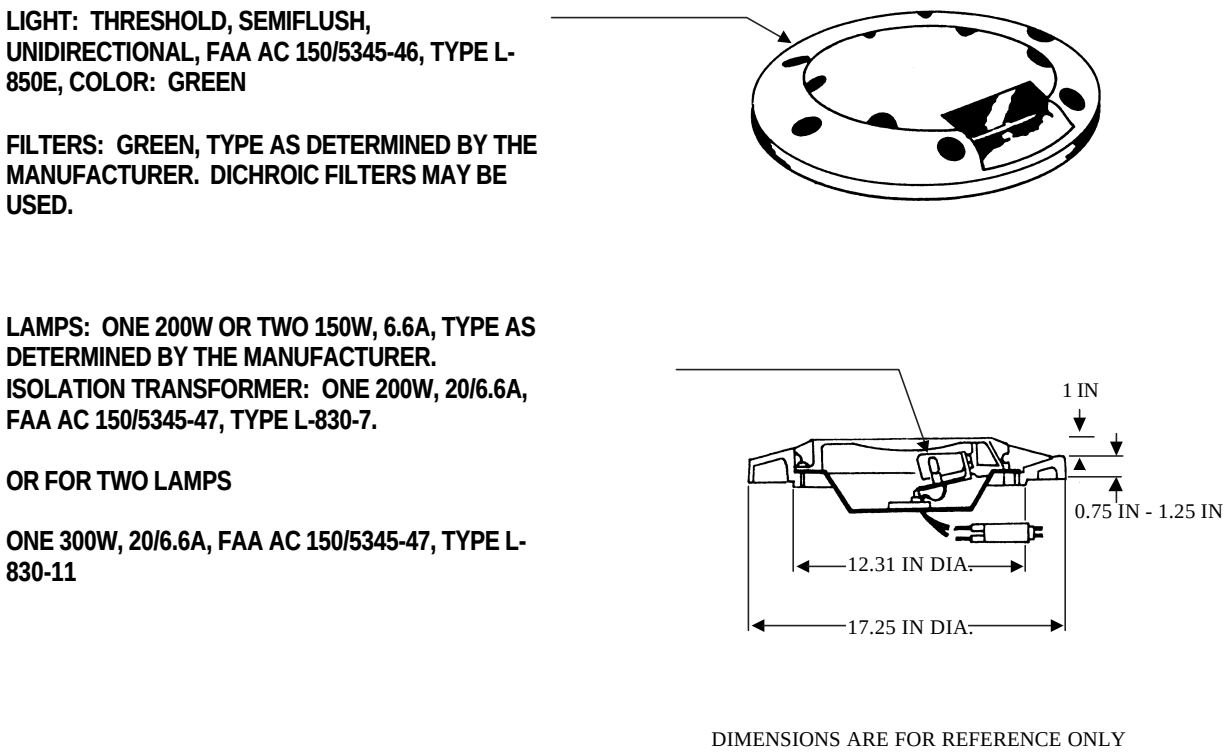

DIMENSIONS ARE FOR REFERENCE ONLY

B. UNIDIRECTIONAL LIGHT

Figure 7. Typical semiflush approach threshold lights, type FAA L-850D or L-850E

LIGHT: THRESHOLD ELEVATED, BIDIRECTIONAL, MIL-L-26990 TYPE MB-1, GREEN/RED

LAMP: 500W, 20A, TYPE Q20A/T20/3

FILTER: GREEN 180°, RED 180°

ISOLATION TRANSFORMER: FAA AC 150/5345-47 TYPE L-830-13

LOCATED AT APPROACH THRESHOLD BAR - OUTER SECTIONS OF INBOARD LIGHTS

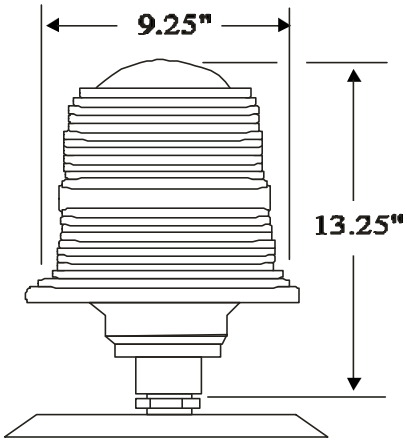

DIMENSIONS ARE FOR REFERENCE ONLY

Figure 8. Typical bidirectional, elevated approach threshold light, type MB-1

44. EQUIPMENT.

The approach threshold lights are as required in table 1. If used, these shall be approximately 8 semiflush lights (figure 7). If bidirectional lights are used, green filters are required for the threshold light beams and red filters for the beams toward the runway. Unidirectional lights shall have green filters. Dichroic filters may be used. The lamps are the type determined by the manufacturer. The number of elevated lights will vary with the width of the runway, but for a 200-foot wide runway there shall be approximately 4 additional lights. These elevated lights may be either unidirectional lights (figure 4) or bidirectional lights (figure 8). The bidirectional elevated lights shall have green and red filters and unidirectional lights shall have green filters. These elevated lights shall be mounted on frangible couplings.

45. PHOTOMETRIC REQUIREMENTS.

46. All the approach lights shall be unidirectional lights except the inboard threshold lights may be bidirectional lights as combination threshold and runway end lights. The axes of the beams shall be parallel to the runway centerline in azimuth, except the elevated inboard threshold lights, if bidirectional, may be toed-in towards the runway centerline at not more than 4.5 degrees. For elevation of the beam axis, refer to AIMING CRITERIA, this WP. The color of the emitted lights shall be in accordance with **ICAO, Annex 14, Vol. 1, App. 1**~~MIL-C-25050~~ as follows:

a. Centerline and 1000-foot crossbar lights - aviation white,

b. Terminating side barrettes and prethreshold wing bars lights - aviation red,

c. Threshold lights - aviation green,

Sequence flashing lights (SFL) - white or bluish-white which may not meet aviation white requirements.

47. Intensity Of Steady-Burning Lights.

The intensity of these lights shall be variable in five steps of 100, 20, 4, 0.8, and 0.2 percent of rated intensity for the steady-burning lights. ~~The intensity-beamspread for these lights at rated current shall be as shown in figure 9. The average intensity of the main beam shall be the arithmetic mean of all points inside contour I on a uniform grid with points not more than one degree apart for each coordinate axis.~~

DRAFT

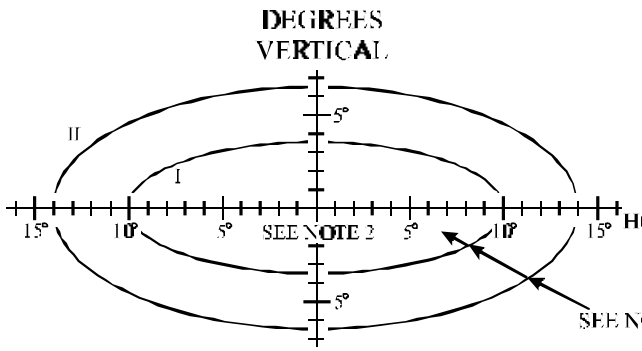

A. ELEVATED APPROACH LIGHTS; CENTERLINE 300M (1000FT) CROSSBAR (STA 10+00 TO 30+00)

	I=50%	II=10%
a	10.0°	14.0°
b	5.0°	6.5°

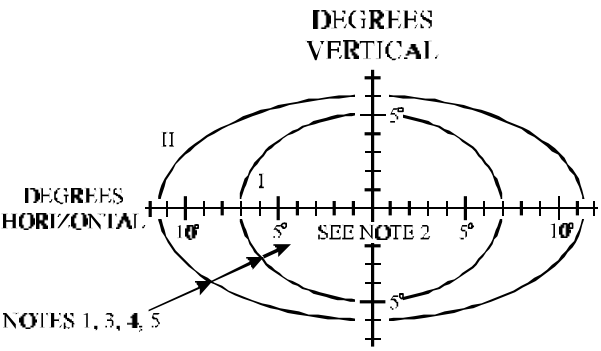

B. SEMIFLUSH WHITE OR RED APPROACH LIGHTS; CENTERLINE OR SIDE ROW (STA 1+00 TO 9+00)

	I=50%	II=10%
a	7.0°	11.5°
b	5.0°	6.0°

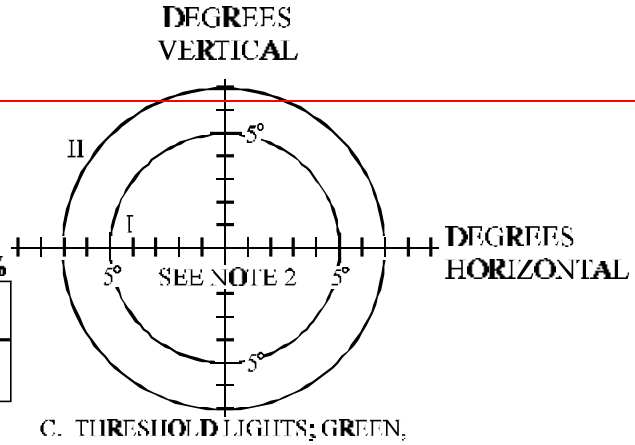

	I=50%	II=10%
a	5.5°	7.5°
b	4.5°	6.0°

C. THRESHOLD LIGHTS; GREEN, ELEVATED OR SEMIFLUSH

NOTES:

1. ALL CONTOURS ARE ELLIPSES CALCULATED BY EQUATION $\frac{X^2}{a^2} + \frac{Y^2}{b^2} = 1$
2. THE MINIMUM AVERAGE INTENSITY OF THE MAIN BEAM (INSIDE CONTOUR I) IS 20,000 CD FOR WHITE, OR 5000 CD FOR RED.
3. MAXIMUM INTENSITY SHOULD NOT EXCEED 1.5 TIMES ACTUAL AVERAGE INTENSITY.
4. MINIMUM INTENSITY OF I–50% AND II–10% OF REQUIRED MAIN BEAM INTENSITY.
5. FOR SEMIFLUSH UNITS, THE PORTION OF LIGHT CUT OFF BY THE MOUNTING SURFACE MAY BE DISREGARDED.

~~Figure 9. Photometric intensity distribution requirements of steady-burning high-intensity approach lights~~

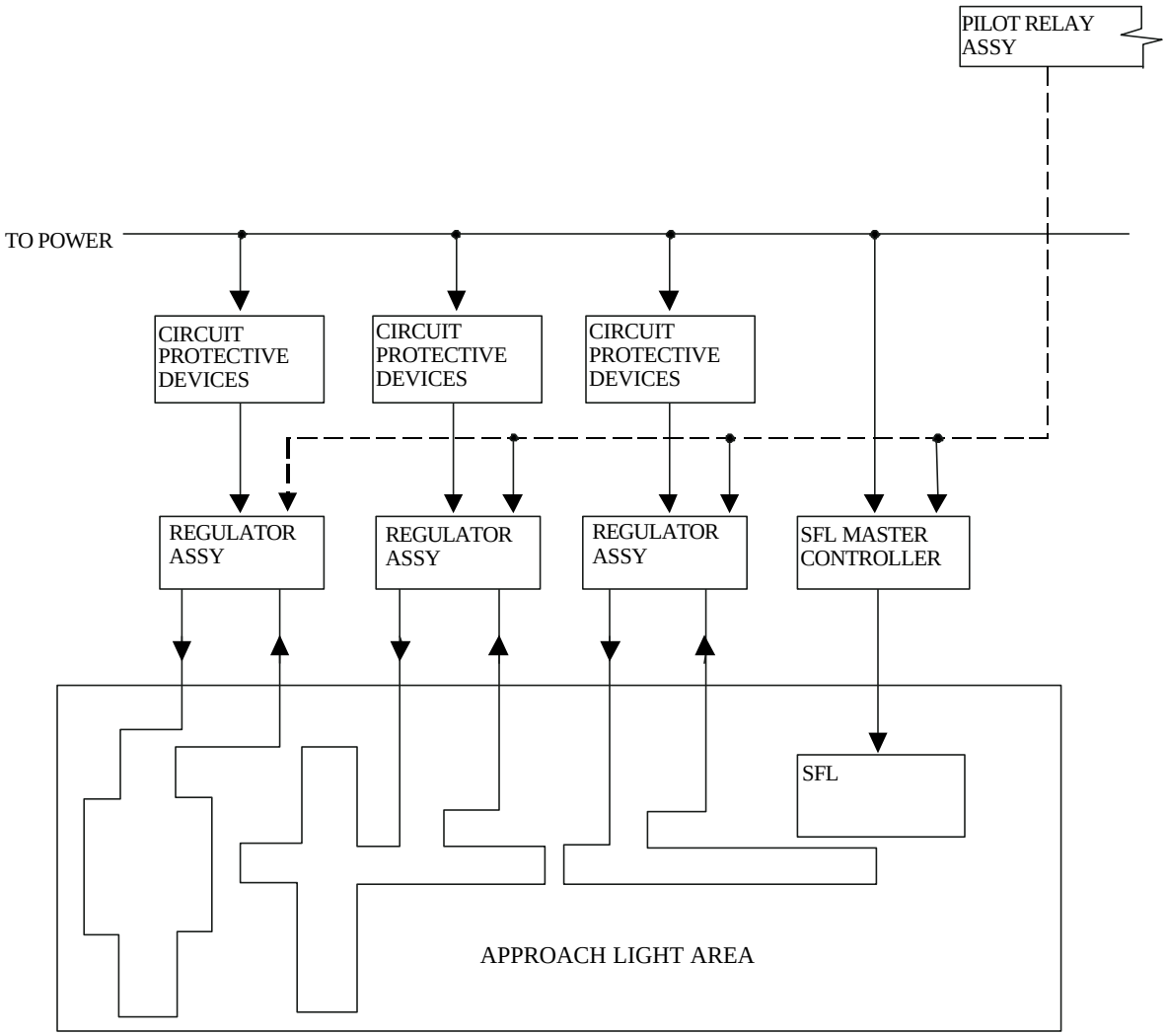

~~Figure 10~~**Figure 9**. Block diagram - approach light circuits

48. Intensity of SFL.

The intensities of these lights shall be progressively variable in three steps of 100, 10, and 2 percent of the rated intensity of the SFL. Each SFL light at the rated intensity setting shall provide an effective intensity of not less than 15,000 candelas at the following five points: the beam axis, plus and minus 15 degrees horizontally, and plus and minus 5 degrees vertically. ~~The effective intensity is determined by the equation:~~

$$\cancel{I_e = \frac{\int_{t_1}^{t_2} I\,dt}{0.2 + t_2 - t_1}}$$

~~where~~ ~~I_e is the effective intensity,~~

~~I is the instantaneous intensity, and~~

~~t_1 and t_2 are the times in seconds of the beginning and end of that part of the flash when the value of I exceeds I_e. The choice of times t_1 and t_2 maximizes the value of I_e.~~

The SFL system shall flash twice per second with the duration of the effective portion of the flash between 250 and 5500 microseconds. The SFL shall flash sequentially towards the runway thresholds at intervals of 1/60 second between adjacent stations and a pause before repeating.

49. POWER AND CONTROLS.

50. POWER SOURCES.

The primary source of power for the SALS approach light system is usually from commercial electrical power sources via appropriate distribution transformers (WP009 00). Since the use of the approach lights is critical for air operations, a secondary or emergency power source is provided (WP009 01). This emergency power source is usually an engine-generator set. An automatic transfer, which switches to the emergency power source preferably in less than 15 seconds when the primary power source fails, shall be provided.

51. SYSTEM POWER.

The SALS incandescent steady-burning lights are powered by three series circuits (~~figure 10~~**figure 9**). Each series circuit consists of a constant-current regulator, power cables, and isolation transformers. The constant-current regulators (WP009 02) shall be 30KW or 50KW size with 5-step intensity settings. These regulators shall be located in the regulator room of the approach lighting vault. The cables shall be types appropriate for overhead and underground installation. Lights shall be equipped with series isolation transformers of the proper type. The light circuits may be interleaved to provide lights throughout the system if one circuit should become inoperative. Power to the SFL shall be from the primary or emergency source through suitable distribution transformers and the master control unit. Multiple type circuits supply the power to each light (WP009 04).

52. APPROACH LIGHTING CONTROLS.

The SALS approach lights shall be remotely controlled from the airfield lighting control panel (WP009 05) in the air traffic control tower and the approach lighting vault. The steady-burning lights are controlled as one unit for operating the lights and for selecting any of five intensity settings. The sequence flashing lights have a separate control for switching but can be operated only when the steady-burning lights are operating. The three intensity settings shall also be interlocked with the steady-burning light intensity as follows:

a. The SFL shall be on high intensity only if the steady-burning lights are on intensity steps 4 or 5.

b. The SFL shall be on medium intensity only if the steady-burning lights are on intensity step 3.

c. The SFL shall be on low intensity only if the steady-burning lights are on intensity steps 1 or 2.

53. APPROACH LIGHTING VAULT.

Each SALS approach light system should be provided with an approach lighting vault to house the power and control equipment. This vault should have three or more compartments containing the following:

a. The lighting control compartments.

b. The generator room with the emergency engine-generator set and the automatic power transfer equipment.

c. The regulator room with the constant-current regulators, distribution transformers, and major switching components. The size of this room should allow space for additional regulators and equipment.

The SFL master control unit may be located in the regulator room or it may be located separately at a more convenient location.

DRAFT

TECHNICAL MANUAL

OBSTRUCTION MARKINGS

SHOREBASED AIRFIELDS

Reference Material

Objects Affecting Navigable Airspace - Federal Aviation Regulation ..... FAR Part 77
Facilities Planning Factor Criteria for Navy and Marine Corp Shore Installations ..... NAVFAC P-80.3
Introduction 002 00
Obstruction Lighting 003 10
Colors FED-STD-595
Obstruction Marking and Lighting ..... FAA AC 70/7460-1
Painting, Marking, and Lighting of Vehicles Used on an Airport ..... FAA AC 150/5210-5

Alphabetical Index

Subject **Page No.**

Alternate Color Bands 3
Checkerboard Patterns. 3
Coordination With The FAA. 2
Description 3
Equipment And Materials 8
Existing Obstruction Markings 2
Flag Markers 8
General Information. 2
General Description 3
Identifying Obstructions. 2
Installation Requirements 8
Installations 8
Justification Requirements. 2
Markers 8
New or Unmarked Objects 2
Overhead Wire Markers 8
Painted Markings. 3
Patterns 3
Power And Controls 8
Purpose. 2
Related Facilities 2
Solid Patterns 3
Spherical Markers. 8
Teardrop Patterns. 3
Vehicle Markings 8

Record of Applicable Technical Directives

None

1. GENERAL INFORMATION.

2. PURPOSE.

This Work Package (WP) contains the requirements for obstruction markings. The purpose is to provide visual identification of objects which are potentially hazardous to safe air navigation and to warn airmen of their presence during daylight hours. These requirements shall be used to mark objects which are new or unmarked where investigation has determined they are hazards to air operations. Existing obstruction markings may continue in service until repainting is necessary. Deviations from these requirements shall be approved using the procedures of WP002 00 and also obtaining approval of the Federal Aviation Administration (FAA).

3. IDENTIFYING OBSTRUCTIONS.

Obstructions are usually objects that extend above the air safety clearance surfaces established for the airfield. For these clearance requirements refer to NAVFAC P-80.3 and FAA FAR Part 77. The FAA has primary responsibility for identifying obstructions. FAA investigation may determine that objects which do not penetrate any safety clearance surface are obstructions. Such objects are usually isolated and have heights more than 200 feet above the terrain. Also the FAA investigation may find that objects which penetrate the safety clearance surfaces do not require obstruction marking. Any object which has been identified as an obstruction shall be treated as follows:

a. Remove the object if practical.

b. Reduce the height of the object below the hazard level.

c. Mark the object as an obstruction.

d. High- or medium-intensity white obstruction lights for daytime. (See WP003 10.)

4. JUSTIFICATION REQUIREMENTS.

Obstruction removal or marking may or may not be the responsibility of the Airfield. The owner of the facility or property usually is required to provide and maintain the obstruction markings. The Airfield's responsibility for marking obstructions may include the following:

a. All obstructions on the Airfield.

b. Navigation installations or facilities that are obstructions and are located off the Airfield property.

c. Structures or natural objects that existed before the Airfield was installed or before the change in operational procedures that results in the object being classified as an obstruction.

5. RELATED FACILITIES.

The only airfield visual aids related to the use of obstruction markings are obstruction lighting (WP003 10). However, certain lights and facilities for visual aids may be obstructions and require obstruction marking.

6. COORDINATION WITH THE FAA.

The Federal Aviation Administration (FAA) has responsibility for promoting air safety. For primary guides for obstruction marking refer to FAA AC 70/7460-1. All Government agencies and organizations are required to be in compliance with these recommendations. Therefore, the latest issue of the Advisory Circular shall be used to determine the minimum requirements in designing and installing obstruction markings. The determination of which objects are obstructions or hazards to air operations should be coordinated with the FAA Regional Office. If the obstruction presents special problems in marking, a further determination may be made with the FAA on whether the marking can be modified or a deviation from the standard is permitted. Modifications or deviations of markings which may be approved are as follows:

a. Marking only a portion of the object. An example is only the upper portion of the object above the terrain or surrounding objects requires marking.

b. No marking is required. The location with respect to terrain or other objects or the conspicuity of the object makes marking the obstruction unnecessary.

c. Modifying the marking pattern. The shape or height of the obstruction may be such that modifying the marking pattern will be more effective and more practical to install.

d. Dimensions of patterns.

e. Colors.

f. Use of high- or medium-intensity white obstruction lights instead of marking.

7. DESCRIPTION.

8. GENERAL.

The details for obstruction markings requirements are given in FAA AC 70/7460-1 and shall be followed. The descriptions given here are only for general information

which is not likely to be changed by revisions of the Advisory Circular. The markings for different types of obstructions may vary depending on the nature of the object and its location. The types of markings or markers used for obstructions are as follows:

a. Painted markings,

b. Markers,

c. Vehicle markings.

9. PAINTED MARKINGS.

Most obstructions are marked by painting the surface. The obstruction marking colors are aviation surface orange chip #12197 and aviation surface white chip #17875 as specified by FED-STD-595. Other colors sometimes used are yellow, black, red, and aluminum. Enamel paint is often used but other types of paint may be suitable depending on the surface and material. Painted surfaces change color with time, and repainting is necessary whenever the change in color, scaling, or chipping is noticeable. Patterns of various types are used for painted surface markings of obstructions. Normally, the size and shape of the obstruction will determine the pattern to be used.

10. Solid Patterns.

Obstructions, for which the projections on any vertical plane has both horizontal and vertical dimensions less than 10.5 feet, shall be a solid pattern. The color shall be aviation surface orange.

11. Alternate Color Bands.

Obstructions which are basically tall and narrow shall be painted with alternate bands of aviation surface orange and aviation surface white (figure 1). These types of obstructions include:

a. Radio and television towers.

b. Supporting structures for overhead transmission lines and cables.

c. Utility poles.

d. Smokestacks and chimneys.

e. Skeletal framework for storage tanks and similar structures.

f. Structures which appear narrow from some views.

g. Wind turbine generator support structures including the nacelle or generator housing.

h. Buildings with horizontal siding.

There shall be not less than seven bands of equal width with the end bands orange in color. The width of the bands shall be not less than 1.5 feet or greater than 100 feet. The bands shall be perpendicular to the vertical axis of the obstruction. Alternate color bands may be used for long, narrow obstructions which have the major dimension horizontal instead of vertical. The bands shall be perpendicular to the long axis of the object. Skeletal framework objects shall be painted on all surfaces, both inner and outer, to increase the effectiveness.

12. Checkerboard Patterns.

Obstructions which are large in both dimensions and normally continuous surfaces should be marked with a checkerboard pattern of alternate rectangles of aviation surface orange and aviation surface white (figures 2 and 3). Examples of obstructions for which this pattern is used include:

a. Buildings.

b. Water, gas, chemical, and grain storage tanks, excluding skeletal framework.

c. Structures which appear broad horizontally with the horizontal dimensions not less than 10.5 feet.

The sides of the checkerboard rectangles shall be not less than 5 feet or more than 20 feet. Whenever possible the corner surfaces of the checkerboard shall be orange in color. Curved or odd shapes may require the shape of the rectangles to be modified to fit the surface.

13. Teardrop Patterns.

Spherical shaped storage tanks with a single pedestal support may be painted with a teardrop striped pattern (figure 4), instead of the checkerboard pattern. The color of the stripes shall be alternate aviation surface orange and aviation surface white. The stripes shall extend from the top center of the tank to its supporting pedestal. The width of the stripes shall be equal and shall be not less than five feet nor more than 15 feet at

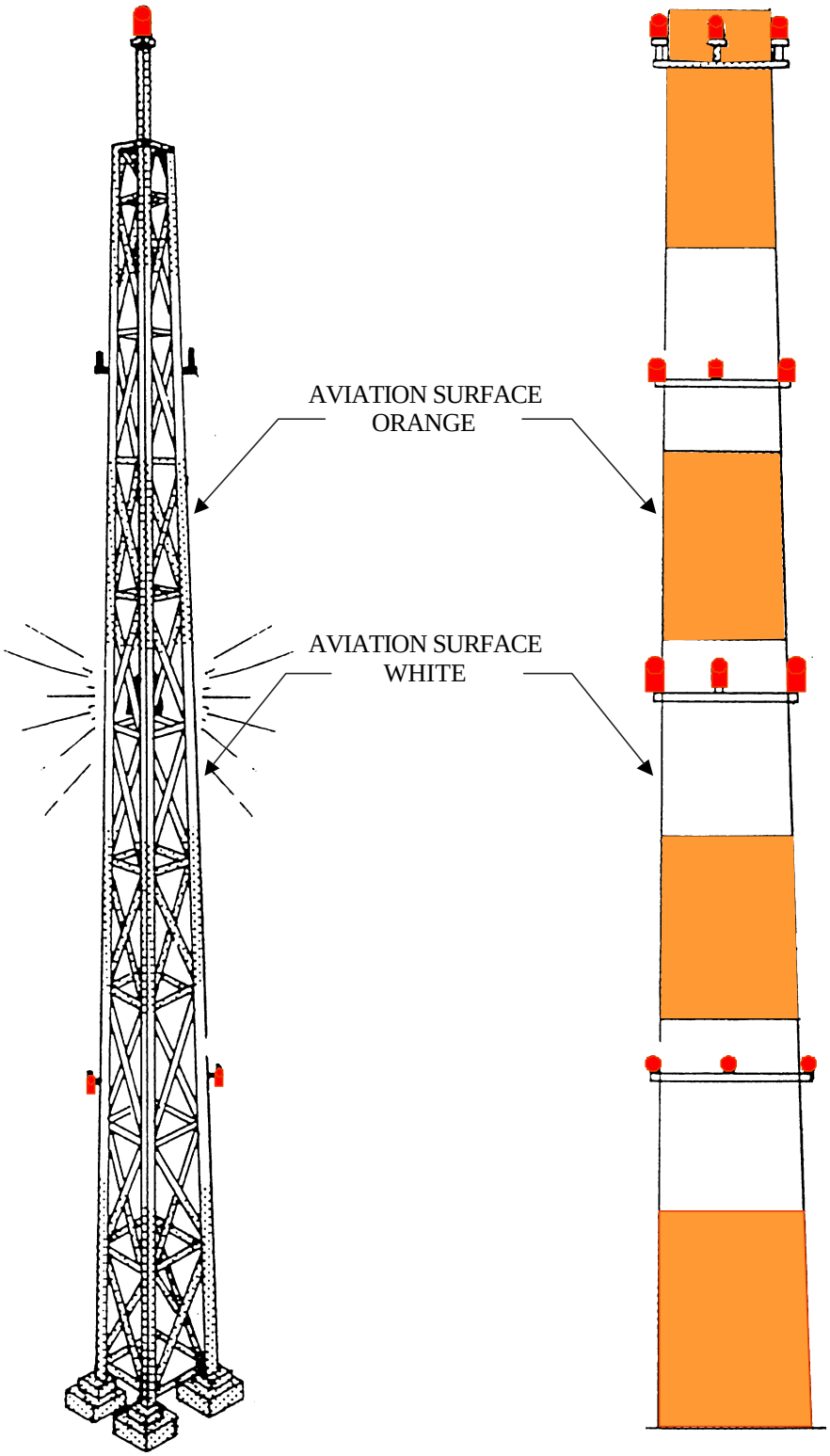

Figure 1. Examples of alternate color bands obstruction markings

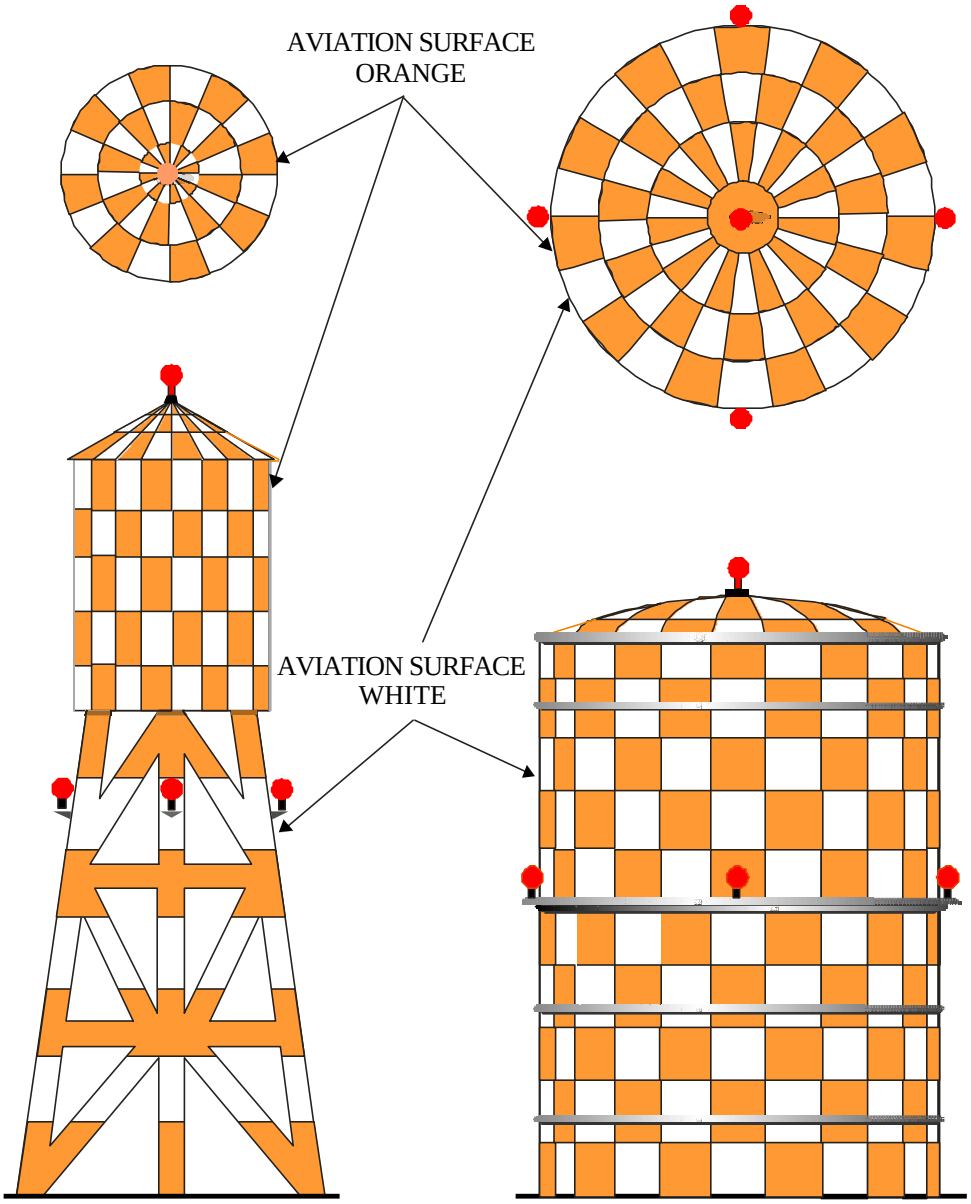

A. COMBINATION OF CHECKERBOARD AND BANDED PATTERN

B. CHECKERBOARD PATTERN

Figure 2. Examples of checkerboard pattern obstruction markings

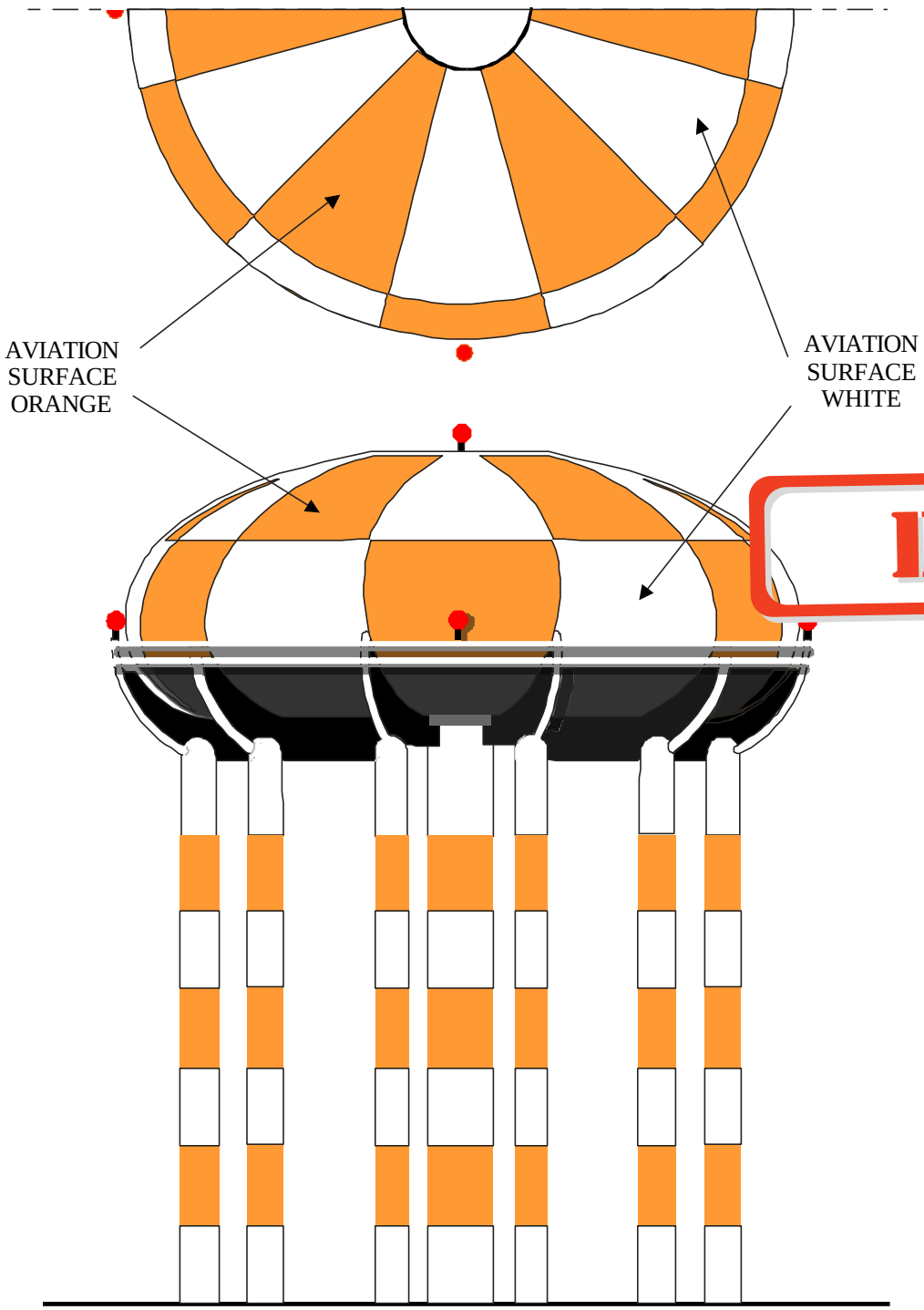

DRAFT

Figure 3. An example of checkerboard pattern obstruction marking on a rounded surface

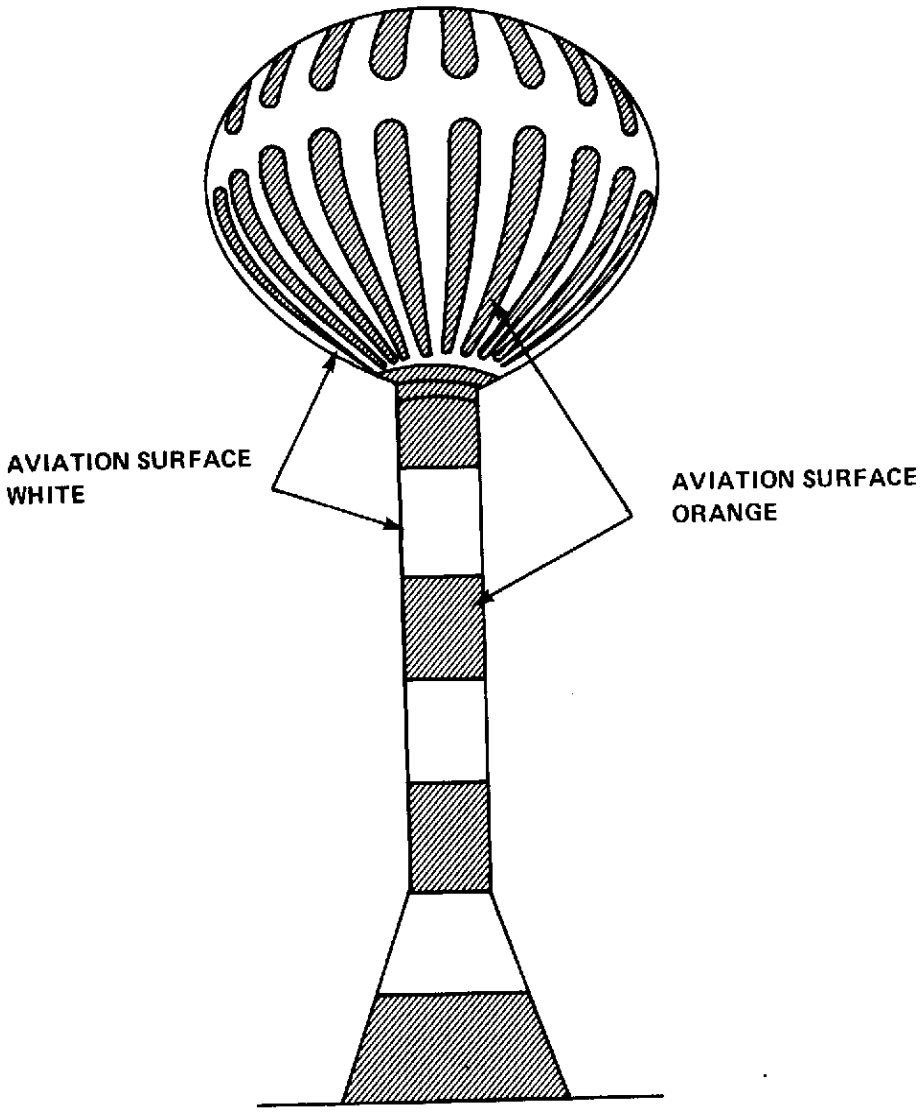

Figure 4. An example of teardrop or beachball pattern obstruction markings

the greatest girth of the tank. If it is desirable to paint the name of the community on the side of the tank the stripe pattern may be broken with a maximum height of 3 feet to serve this purpose.

14. MARKERS.

Markers should be used to mark obstructions where it is impractical to mark the obstruction by painting. Markers may also be used in addition to painted markings if such markers may improve the conspicuity of the obstruction. These markers shall be displayed in conspicuous positions on or adjacent to the obstructions so as to retain the general definition of the obstruction. These markers shall be distinctively shaped to avoid being mistaken for markers for other purposes. The markers should not increase the hazard which they mark. The two types of obstruction markers used are:

a. Spherical markers.

b. Flag markers.

15. Spherical Markers.

Spherical obstruction markers are normally used to identify overhead wires. Often these overhead wires are not above the airspace safety clearance surfaces but are considered a hazard because of the location and difficulty in seeing the wires. The spherical markers should be not less than 36 inches in diameter and shall be not less than 20 inches in diameter and should be solid aviation surface orange in color. In some cases the color may be yellow or white. The top of the markers shall not be lower than the highest wire. The markers shall be displayed at equal intervals of not more than 200 feet. For wires in critical areas near runway ends, closer intervals should be used. If the markers can be installed on more than one wire, the markers may be placed alternately on the wires at the standard intervals to distribute the weight and wind loading on the wires. These markers may be shapes other than spherical provided the projected area of such markers are not less than that presented by the sphere. Alternating color schemes can provide more conspicuity against variations in background.

16. Flag Markers.

Flags may be used to mark obstructions when it has been determined that the use of painted surfaces or spherical markers is impractical. Temporary construction equipment, cranes, derricks, and drilling rigs are examples; but catenaries must use spherical markers. The flag markers shall be rectangular in shape and have stiffeners to keep them from drooping in calm wind. The color of flag markers may be solid aviation surface orange, triangular aviation surface orange and aviation surface white, forming a rectangle not less than 2 feet on each side, or checkerboard aviation surface orange and aviation surface white. The flag markers shall be displayed around, on top of, or around the highest edge of the obstruction. When flag markers are used to mark extensive obstructions or closely grouped obstruction the spacings shall be approximately 50 feet apart. The supports for the flags shall keep them free of the ground, vegetation, or nearby surfaces without increasing the hazard of the obstruction.

17. VEHICLE MARKINGS.

Vehicles used in the aircraft operational areas of the airfield shall be painted and marked as recommended by FAA Advisory Circular AC 150/5210-5.

18. INSTALLATIONS.

19. INSTALLATION REQUIREMENTS.

For details for installing the obstruction markings and markers refer to FAA AC 70/7460-1.

20. EQUIPMENT AND MATERIALS.

Obstruction markings by painting requires only the paints of the colors specified and the materials and equipment used in preparing the surfaces and applying the paint. Commercial paints appropriate for the surfaces and conditions of exposure shall be used. Obstruction markers, either spherical or flags, may be obtained from commercial sources or fabricated locally.

21. POWER AND CONTROLS.

22. Obstruction markings do not require electrical power or control.

DRAFT

TECHNICAL MANUAL

OBSTRUCTION LIGHTINGS

SHOREBASED AIRFIELDS

Reference Material

Objects Affecting Navigable Airspace - Federal Aviation Regulation ..... FAR Part 77
Facilities Planning Factor Criteria for Navy and Marine Corp Shore Installations ..... NAVFAC P-80.3
Introduction 002 00
Obstruction Marking 003 09
Ambulance Emergency Medical Care Surface Vehicle FED-KKK-A-1822
Light, Navigational, Beacon, Obstacle or Code, Type G-1 ..... MIL-L-6273
Light, Beacon, Rotating, 24-Inch MIL-L-7158
Aeronautical Ground Light and Surface Marking Colors ..... ICAO, Annex 14, Vol. 1, App. 1
Obstruction Marking and Lighting ..... FAA AC 70/7460-1
Painting, Marking, and Lighting of Vehicles Used on an Airport ..... FAA AC 150/5210-5
Specification for Obstruction Lighting Equipment ..... FAA AC 150/5345-43
Isolation Transformers for Airport Lighting Systems ..... FAA AC 150/5345-47

Alphabetical Index

Subject **Page No.**

Beacons 3
Colors 4
Controls 12
Coordination With The FAA. 2
Description 3
Duel Red and Higher-Intensity White Lights 3
Equipment 4
Existing Obstruction Lights 2
Fixtures. 4
Flash Characteristics 4
General Description. 3
General Information. 2
Higher Intensity Obstruction Lighting Systems 3
High-Intensity White Obstruction Lights 3
Installation Requirements 4
Installations 4
Intensity-Distribution Requirements 12
Justification Requirements. 2
Medium Intensity White Obstruction Lights 3
Monitoring. 12
Nonstandard Lights. 4
Overhead Wire Lighting 3, 12
Photometric Characteristics 4
Power. 12
Power And Controls 12
Purpose. 2

Red Obstruction Lighting System. 3
Related Facilities. 2
Required Effective Intensities of Obstruction Lights 11
Schedule Of Equipment For Obstruction Lighting. 9
Steady-Burning Lights 3
Temporary Obstruction Lighting. 3
Vehicle Obstruction Lighting. 4

DRAFT

Record of Applicable Technical Directives

None

1. GENERAL INFORMATION.

2. PURPOSE.

This Work Package (WP) contains the requirements for obstruction lighting. The purpose of obstruction lighting is to provide visual identification of objects at night, or in some cases in day times, which are potentially hazardous to air navigation. These requirements shall be used to light obstructions when an investigation has determined that the object is a hazard to air operations or when replacement of existing obstruction lights is required. Existing obstruction lighting may continue to be used if serviceable.

3. JUSTIFICATION REQUIREMENTS.

Any object that projects above the airspace safety clearance surfaces and has been determined to be an obstruction or a hazard shall be lighted. For determining these clearances refer to NAVFAC P-80.3 and FAA FAR Part 77. Objects determined to be obstructions or hazards should be considered for action as follows:

a. Removal of object if practical.

b. Lowering the objects below the height considered to be an obstruction or hazard.

c. Lighting the object as an obstruction.

Hazards are objects which do not project through an airspace safety clearance surface but should be marked as obstructions, especially if the height is more than 200 feet above the surrounding terrain, because they are potential hazards to air operations. The obstructions which are the responsibility of the Navy for lighting include the following:

a. All obstructions on the Air Station.

b. Navigation installations or facilities that are obstructions which may be located elsewhere than on the Air Station property.

c. Natural objects or structures which existed before the Air Station or before a change in procedures that resulted in the object being classified as an obstruction.

The approval of deviations from these requirements shall follow the procedures of WP002 00.

4. RELATED FACILITIES.

The only airfield visual aids related to the use of obstruction lighting are obstruction markings (WP003 09). Normally, objects requiring obstruction markings also require obstruction lighting including certain lights and facilities for visual aids.

5. COORDINATION WITH THE FAA.

The Federal Aviation Administration (FAA) has responsibility for promoting air safety. For primary guides for obstruction lighting refer to FAA Advisory Circular 70/7460-1. The latest issue of the above Advisory Circular shall be used to determine the minimum requirements in designing and installing obstruction lighting. The determination of which objects are obstructions or hazards should be coordinated with the FAA Regional Office. If the obstruction presents special problems in lighting, a further determination may be made with the FAA on whether the lighting can be modified or a deviation from the standard is permitted. Approval for these modifications or deviations which may be approved are as follows:

a. Lighting only a portion of the object. Example: Only the upper portion of the object above the terrain or surrounding objects requires lighting.

b. No lighting required. Example: The location with respect to terrain or other objects or the conspicuity of the obstruction makes lighting the obstruction unnecessary.

c. Modifying the lighting configuration. Example: The shape or height of the obstruction may be such that modifying the lighting configuration will be more effective or more practical.

d. Using an alternate system. Example: A high-intensity flashing white light system may be more effective.

6. DESCRIPTION.

7. GENERAL.

For details of obstruction lighting requirement refer to FAA AC 70/7460-1. The descriptions given here are for general information and guidance that is not likely to be changed by revisions to the FAA Advisory Circular. The lighting for different types of obstructions may vary depending on configuration of the object and its location. The obstruction light systems commonly used at Navy airfields are the red obstruction lights and flashing red beacons; however, the FAA Advisory Circular permits other systems to be installed. One of the alternate systems may be more effective for some types of obstructions such as very tall towers and smokestacks and long spans of overhead power cables or transmission lines.

8. RED OBSTRUCTION LIGHTING SYSTEM.

The red obstruction lighting system consists of steady-burning red lights, flashing red beacons, or a combination of these lights used during hours of darkness and limited daytime conditions. Painted markings (see WP003 09) provide identification in usual daytime hours. Steady-burning lights are continuously lighted, omnidirectional lights and beacons are flashing omnidirectional lights. The configuration, type, and number of lights depends on the height and type of obstruction to be identified and on its surroundings. For objects less than 150 feet in height only steady-burning lights mounted at the top are used. For objects more than 150 feet in height a combination of one or more beacons and one or more levels of steady-burning lights are used. For each required lighting level not less than one beacon or two lights shall be visible at any azimuth angle and at all approach angles. Some obstructions may require several lights or beacons at each level. Some large-sized obstructions which need more conspicuous lighting or longer range identification may use the 24-inch rotating beacon with red lenses.

9. HIGHER INTENSITY OBSTRUCTION LIGHTING SYSTEMS.

Some obstructions require higher intensity lighting to provide identification and adequate clearance of the object in restricted visibility, especially during daylight hours. These objects are typically tall antenna towers, transmission lines, and tall stacks or chimneys. Flashing higher intensity obstruction lighting systems which may be more effective and more economical to install and maintain are permitted. These lighting systems include the following:

a. High-intensity white obstruction lights. Flashing high-intensity white lights provide greater visual range during daylight hours and have reduced intensities for twilight and night operations. These lights are used mostly for structures 500 feet or more in height or on supports for transmission lines with long spans. The distinctive flashes provide good identification and in some cases surface markings may be omitted. Multiple fixtures may be necessary to provide coverage in all directions of azimuth.

b. Medium-intensity white obstruction lights. Structures less than 500 feet in height may use flashing medium-intensity white lights instead of orange and white paint or other lighting systems. The intensity of these lights shall be automatically reduced to the selected value for twilight and nighttime operation. These medium-intensity white lights are not recommended for structures less than 200 feet above ground level unless approved by an FAA aeronautical study.

c. Dual red and higher-intensity white lights. A combination of steady-burning and flashing red lights for night operations and higher-intensity flashing white lights for daytime operations may be used for some structures. With this dual system the painted markings may be omitted.

10. TEMPORARY OBSTRUCTION LIGHTING.

Where an obstruction to air navigation is presented during construction of a structure or other temporary object, temporary obstruction lighting, similar to that recommended for a permanent installation, shall be installed and operated. Temporary obstruction lighting is required for cranes and construction equipment as well as the structure. At least two lights should be installed at the uppermost part of the structure or object to ensure unobstructed viewing of at least one light by a pilot on a potential collision course. The temporary lights should be similar to those recommended by the FAA study for a permanent installation (red, medium-

intensity white, or high-intensity white lights) during periods of darkness. For daytime marking, flags may be used instead of painted markings or red lights, but for medium- or high-intensity flashing lights, the lights should be operated 24 hours per day. As the height increases past each level for lights, two or more temporary lights shall be installed at the higher level. Temporary obstruction lighting may be one of the following:

a. Red steady-burning lights.

b. Red flashing beacons.

c. High-intensity white flashing obstruction lights.

d. Medium-intensity white flashing obstruction lights.

11. NONSTANDARD LIGHTS.

Obstruction lights other than those described may be used if approved by FAA. Such lighting installations shall provide equal intensity to that specified for approved obstruction light assemblies in all angles of azimuth and elevation. The nonstandard lights should provide the same color and flash characteristics with equal or greater dependability as approved lights. Moored balloons, chimneys, church steeples, and similar obstructions may be floodlighted by fixed projectors installed at three or more equidistant points about the base of the obstruction. The average illumination over the top one-third of the obstruction shall be not less than 15 foot candles.

12. VEHICLE OBSTRUCTION LIGHTING.

Vehicles or mobile equipment operating within the aircraft traffic areas other than aprons are considered obstructions or hazards and shall be lighted. For these vehicle lighting requirements refer to FAA Advisory Circular 150/5210-5. Fire and rescue vehicles should have flashing red or combination red and white beacons. Service vehicles shall have flashing (rotating) yellow beacons. Ambulances lighting shall be in accordance with Federal Specification KKK-A-1822.

13. INSTALLATIONS.

14. INSTALLATION REQUIREMENTS.

For details on installing obstruction lighting refer to FAA AC 70/7460-1. Typical examples of obstruction lighting are shown in figures 1, 2, and 3.

15. EQUIPMENT.

16. FIXTURES.

The approved equipment for the obstruction lighting is given in table 1. Typical fixtures for red obstruction lighting are shown in figure 4 and for white obstruction lights in figure 5.

17. PHOTOMETRIC CHARACTERISTICS.

The light emitted by the obstruction lighting fixtures shall have the following photometric characteristics:

a. Colors. The colors of obstruction lights shall be as follows:

(1) Steady-burning red lights and the red flashing beacons shall be aviation red in accordance with specification ICAO, Annex 14, Vol. 1, App. 1.

(2) High-intensity and medium intensity flashing white lights shall be aviation white in accordance with ICAO, Annex 14, Vol. 1, App. 1 or xenon gas discharge white.

(3) Vehicle flashing beacons shall be aviation red, aviation white, or aviation yellow, as required, in accordance with ICAO, Annex 14, Vol. 1, App. 1.

b. Flash Characteristics. The flashing characteristics of obstruction lights shall be as follows:

(1) Steady-burning red lights shall operate continuously except some installations may flash these lights simultaneously with the red beacons.

(2) The red beacons shall flash simultaneously. Incandescent beacons flash rate shall be between 20 and 40 flashes per minute. Discharge type beacons rate shall be 40 flashes per minute. Discharge type beacons rate shall be 40 flashes per minute. The duration of emitted lights shall be between 50 and 67 percent of the cycle.

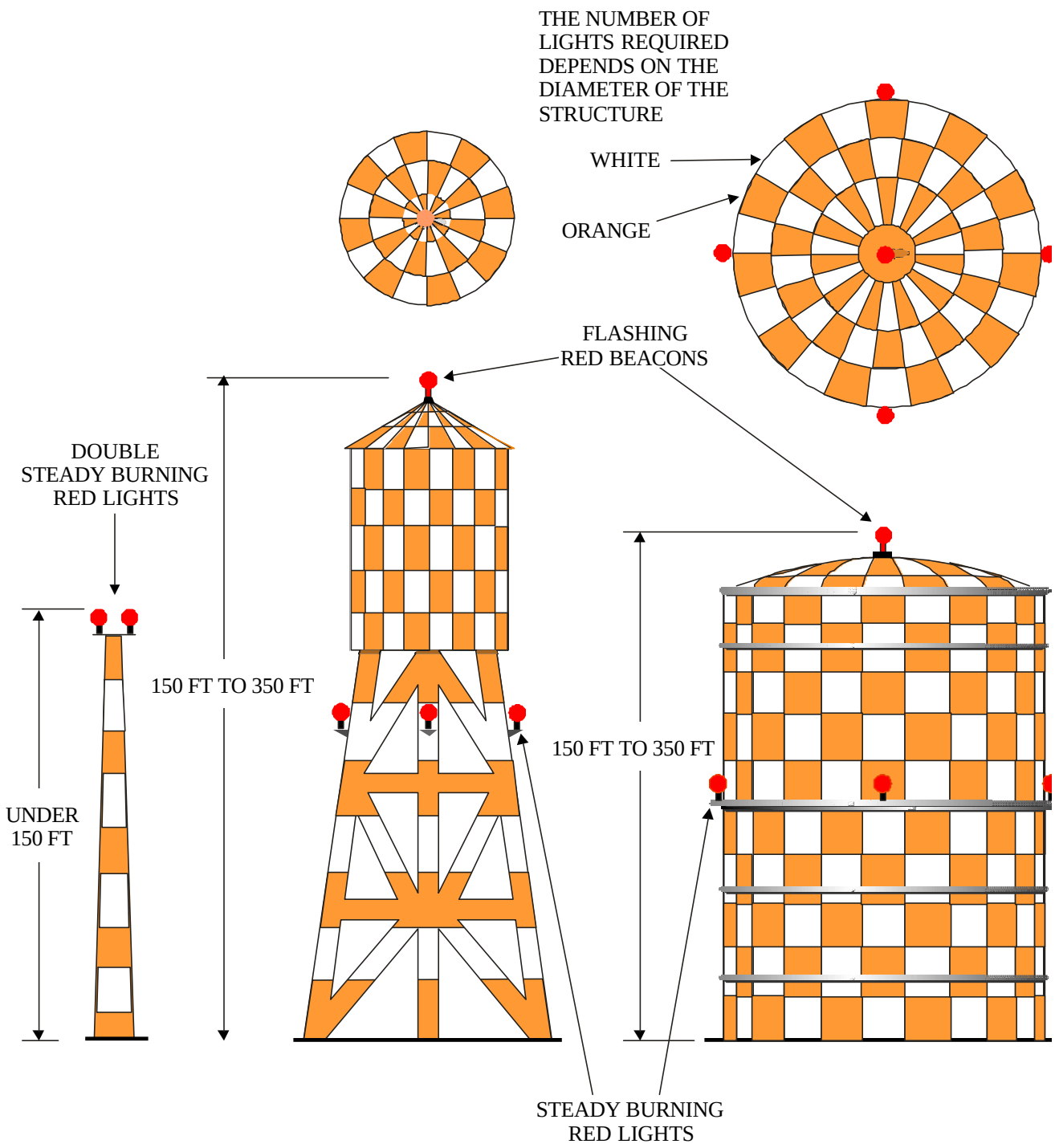

Figure 1. Example of obstruction lighting for objects of height up to 350 feet.

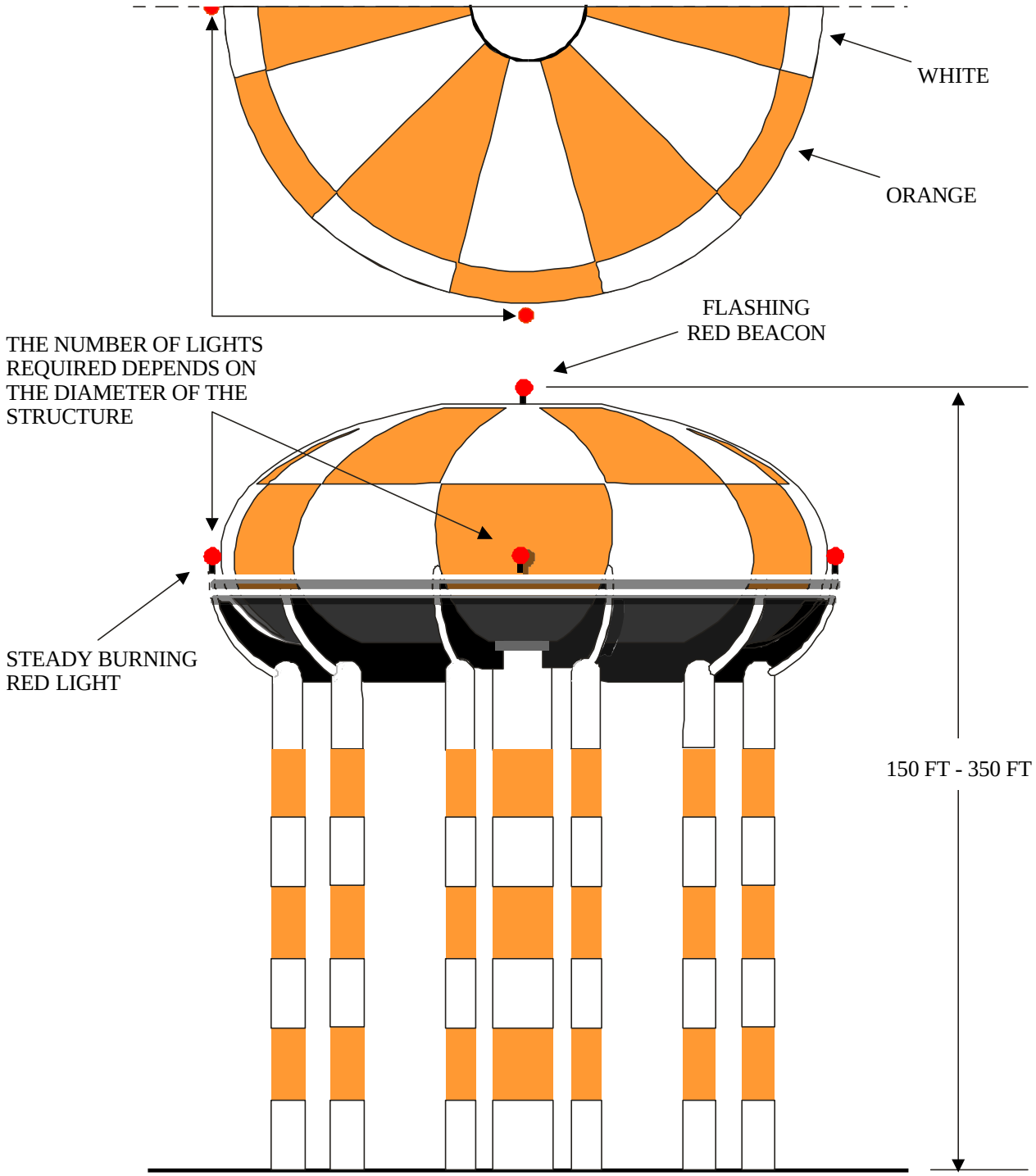

Figure 2. An example of obstruction lighting for large tanks on open structure supports of height between 150 feet and 350 feet

DRAFT

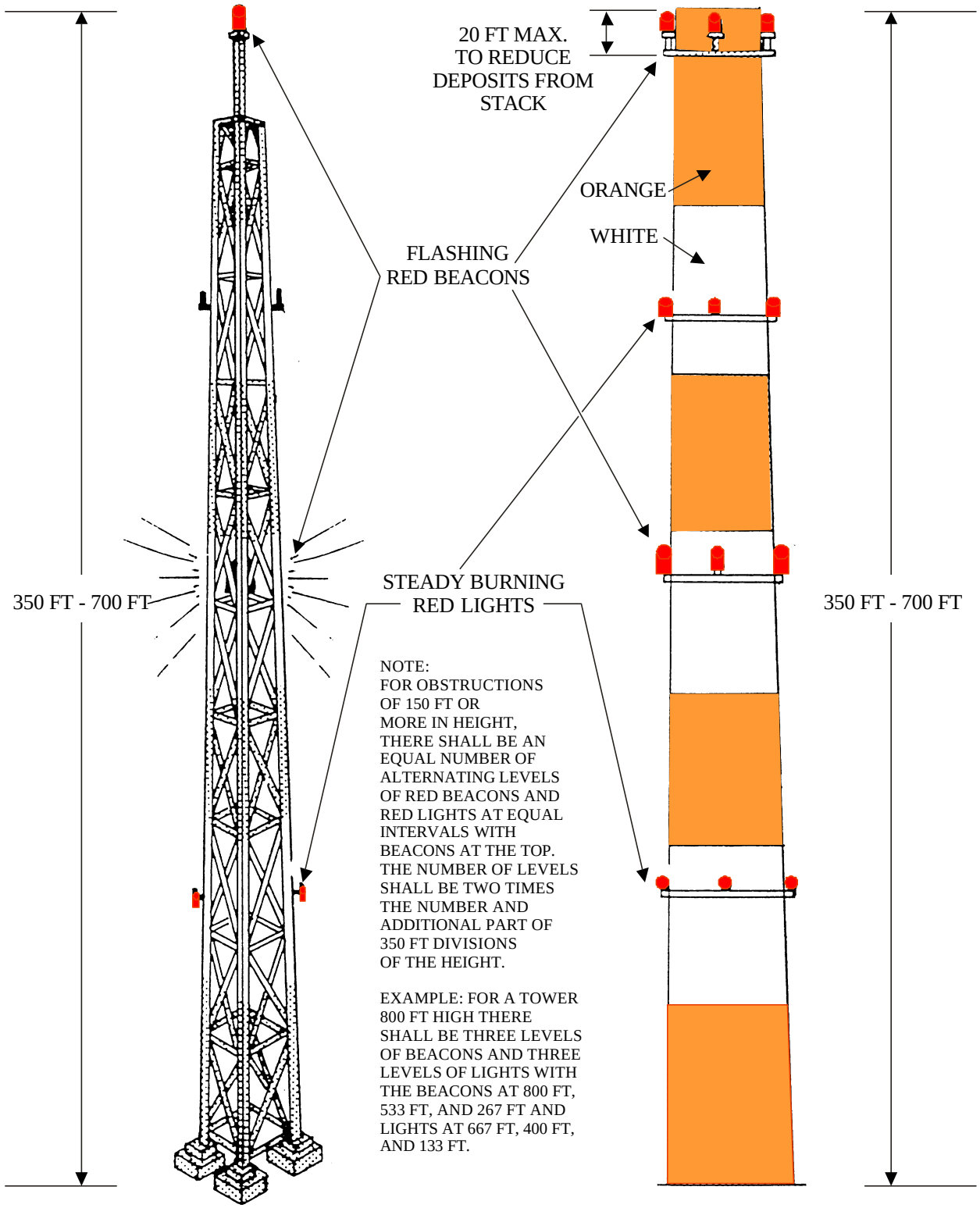

Figure 3. Examples of obstruction lighting for towers and stacks of height between 350 feet and 700 feet

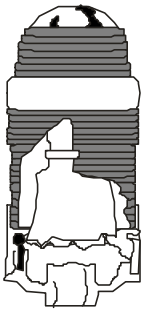

a. SINGLE STEADY-BURNING LIGHTS,
FAA-AC 150/5345-43 TYPE L-810

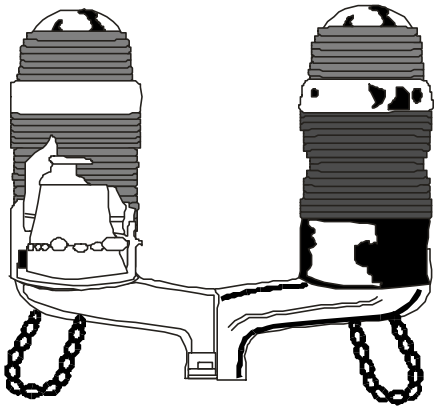

b. DOUBLE STEADY-BURNING LIGHTS
FAA AC 150/5345-43 TYPE L-810

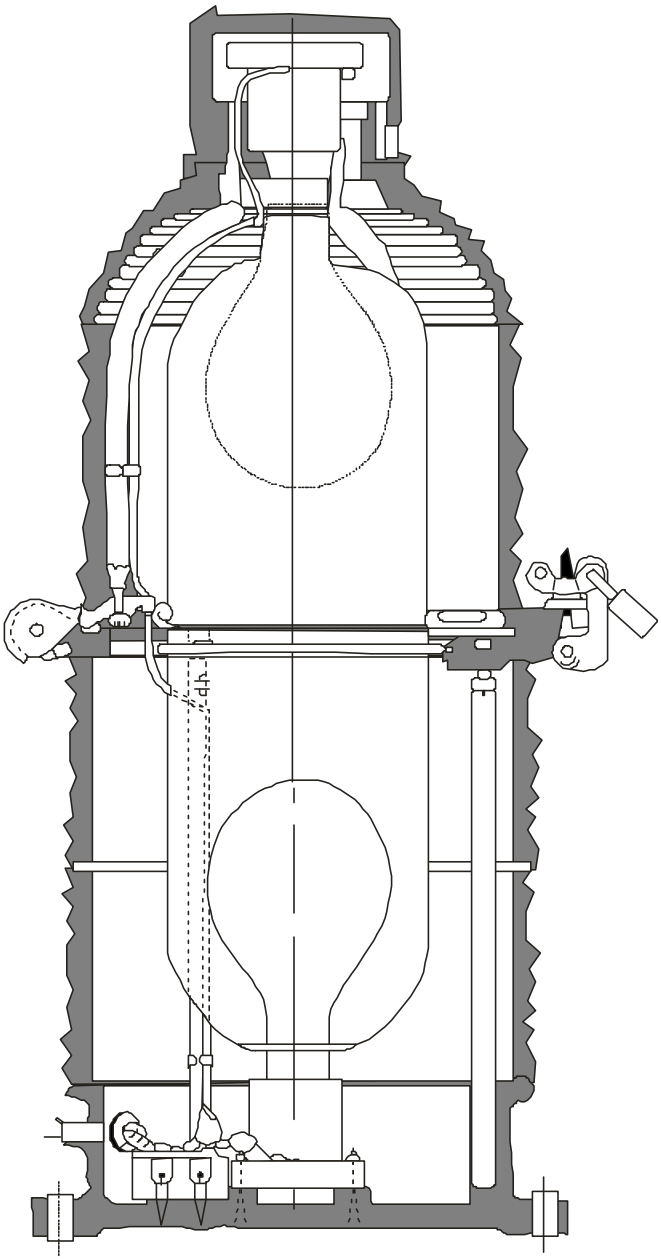

c. FLASHING BEACONS, FAA AC 150/5345-43
L-864, OR MIL-L-6273 TYPE G-1
TWO 700W 120V TYPE 700PS40P LAMPS

Figure 4. Typical red obstruction lights

Table 1. SCHEDULE OF EQUIPMENT FOR OBSTRUCTION LIGHTING.[1/]

Purpose Type of Fixture	Lamp Rating and Type	Power Transformer or Comments	
		Rating	FAA Type AC150/5345-47
Steady-burning red lights.			
FAA AC 150/5345-43, Type L-810	125W 120V 125 A21/P	6.6/6.6A 100W for single light 6.6/6.6A 200W for double light	L-830-4 L-830-6
Flashing red beacon, medium intensity.			
MIL-L-6273 type G-1 or FAA AC 150/ 5345-43, type L-864	Two 700W 120V 700PS40P Two 700W 120V 700PS40P	Includes flasher unit.	
Flashing red beacon, rotating high-intensity, for extensive obstructions.			
MIL-L-7158	Two 1200W 120V, 1200T20	Red covers without split beam.	
High-intensity, flashing white light.			
FAA AC 150/5345-43, Type L-856, L-857	As determined by manufacturer.	Controller unit includes flasher and power supply.	
Medium-intensity, flashing, white system, dual system, or appurtenance light, omnidirectional.			
FAA AC 150/5345-43, Type L-865, L-866	As determined by manufacturer.	Controller unit includes flasher and power supply.	
Vehicle obstruction beacon, rotating, flashing.			
Red and white or red only commercial Yellow only, commercial	As determined by manufacturer.		

[1/] Number of units varies with type and height of obstruction.

DRAFT

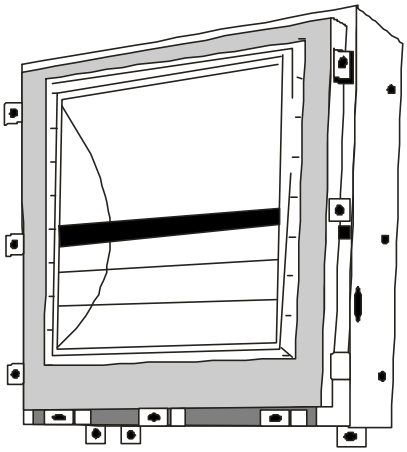

HIGH-INTENSITY WHITE
OBSTRUCTION LIGHT,
FAA AC 150/5345-43,
TYPE L-856.

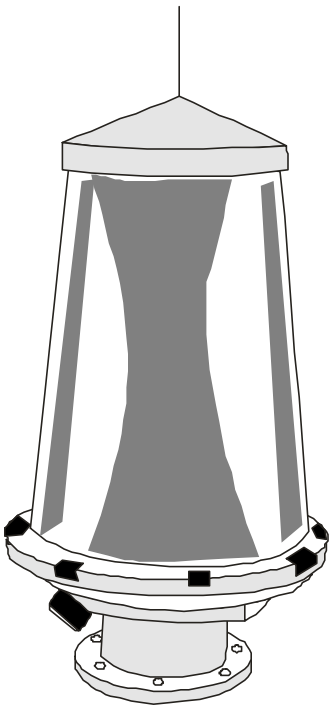

MEDIUM-INTENSITY WHITE
OBSTRUCTION LIGHT,
FAA AC 150/5345-43
TYPE L865, L866

Figure 5. Typical white obstruction lights

Table 2. REQUIRED EFFECTIVE INTENSITIES OF OBSTRUCTION LIGHTS

Intensity step	Minimum Beamspread Vertical (degrees)	Minimum Horizontal (degrees)	Intensity Peak (candelas)
Steady-burning red lights			
Full	10	360	30-150
Flashing red beacon, medium intensity			
Full	3	360	2,000 ±25%
Flashing red beacon, rotating			
Full	10	360	20,000 min.
Flashing white beacons, medium intensity			
Day/Twilight	3	360	20,000 ±25%
Night	3	360	2,000 ±25%
High-intensity flashing white lights, towers and stacks[1/]			
Day	3 to 7	360	270,0000 ±25%
Twilight	3 to 7	360	20,000 ±25%
Night	3 to 7	360	2,000 ±25%
High-intensity flashing white lights, transmission line supports[1/]			
Day	3 to 7	180 or 360	140,0000 ±25%
Twilight	3 to 7	180 or 360	20,000 ±25%
Night	3 to 7	180 or 360	2,000 ±25%
Vehicle obstruction beacons			
Full	10	360	40 min 400 max[2/]

[1/] Multiple lights may be used to obtain horizontal coverage.

[2/] The minimum and maximum are for the horizontal plane, but the peak may be greater at higher vertical angles.

(1) High-intensity white flashing lights on obstructions other than supports for overhead transmission lines shall flash simultaneously at 40 flashes per minute. The effective flash duration shall be not more than 10 milliseconds for day intensity, not more than 10 milliseconds for twilight intensity, and between 100 and 250 milliseconds for night intensity.

(2) High-intensity white flashing lights on supports for overhead transmission lines are mounted at the top of the structure, at the height of the lowest point in the catenary, and midway between the other two lights. The flashing sequence shall be middle, top, and bottom lights with the time between corresponding adjacent flashes of 1/13, 2/13, and 10/13 seconds. The flash rate for each light shall be 60 flashes per minute. The flash duration shall be not more than 10 milliseconds for day intensity, not more than 10 milliseconds for twilight intensity, and between 100 and 250 milliseconds for night intensity.

(3) Medium-intensity white flashing lights on obstructions other than supports for overhead transmission lines shall flash simultaneously at 40 flashes per minute. The effective flash duration shall be less than 10 milliseconds for day and twilight intensities and between 100 and 250 milliseconds for night intensity.

(4) Medium-intensity white flashing lights on supports for overhead transmission lines are mounted at the top of the structure, at the height of the lowest point in the catenary, and midway between the other two lights. The flashing sequence shall be middle, top, and bottom lights with the time between flashes of 1/13, 2/13, and 10/13 seconds. The flash rate for each light shall be 60 flashes per minute. The flash duration shall be less than 10 milliseconds for day and twilight intensities and between 100 and 250 milliseconds for night intensity.

(5) Vehicle lights. The flash rate shall be between 60 and 90 flashes per minute.

b. Intensity-Distribution Requirements. The intensity and distribution requirements shall be as indicated in table 2.

18. POWER AND CONTROLS.

19. POWER.

The electrical power for obstruction lights are usually energized from multiple circuits but some steady-burning lights may use 6.6 ampere series circuits. The power source may be from a central location such as the airfield lighting vault or from a local source. If the lights are energized from a series circuit, a constant voltage regulator of suitable capacity and output current is required. Lights energized from multiple circuits usually operate from 120, 208, 240, or 480 volts. Some lights may be capable of operating at more than one voltage. Emergency power is not essential, but it is desirable if available.

20. CONTROLS.

The obstruction lights may be controlled manually from the air traffic control tower or automatic local control using photoelectric switches. Manual control in the tower is usually preferred for the red lighting systems. This control is usually only switching the lights on and off but may be used in restricted visibility during daylight hours. For many obstructions it is not practical to provide manual control. The automatic local controls for red lighting systems use photoelectric switches which energize the lights before the north sky illuminance decreases below 35 footcandles (Fc) and turns off the lights before this illuminance increases above 58 Fc. For obstruction lights using more than one intensity setting, the automatic control switches at the following north sky illuminance levels:

Day to twilight	60 and 30 Fc
Twilight to night	5 to 2 Fc
Night to twilight	2 to 5 Fc
Twilight to day	30 to 60 Fc

21. MONITORING.

Monitoring of obstruction lights is required and may be accomplished by visual observation once each 24 hours. If visual monitoring is not practical and for some especially hazardous obstructions such as tall towers, remote monitoring is required. The top lights and all beacons and high-intensity flashing white lights shall be included in remote monitoring of the system.

TECHNICAL MANUAL

VISUAL APPROACH SLOPE INDICATOR (VASI) SYSTEM

REFERENCE ONLY

SHOREBASED AIRFIELDS

Reference Material

Introduction 002 00
~~Definitive Designs for Naval Shorebased Facilities ..... NAVFAC P-272~~
Precision Approach Path Indicator (PAPI) Systems 003 12
Runway Markings 004 01
Runway Threshold Lights 004 02
Runway End Lights 004 04
High-Intensity Runway Edge Lights (HIRL) 004 05
Electrical Power and Control for Visual Aids 009 00
Constant-Current Regulators 009 02
Airfield Lighting Control Panels 009 05
Aeronautical Ground Light and Surface Marking Colors ..... ICAO, Annex 14, Vol. 1, App. 1
Specification L-828, Constant-Current Regulators ..... FAA AC 150/5345-10
Isolation Transformers for Airport Lighting Systems ..... FAA AC 150/5345-47
Generic Visual Glideslope Indicators (GVGI) ..... FAA AC 150/5345-52

Alphabetical Index

Subject **Page No.**

Aiming 7
Approach Path Angle 4
Certification 7
Controls 7
Description 2
Determining The Runway Reference Point And Approach Path Angle 4
Dimensions 4
Equipment 5
Existing Installations 2
General Description. 2
General Information. 2
Installation Requirements 4
Installations 4
Justification Requirements. 2
Location Of The Light Units. 5
Location Of VASI Bars. 5
Locations And Dimensions. 4
Photometric Characteristics 5
Power. 7
Power And Controls 7
Purpose. 2
Related Facilities 2

DRAFT

Runway Referense Point (RRP) 4
Schedule Of Equipment For VASI System 7
Tolerances 5
Transition Sector 5
VASI-4 4
VASI-12 4
VASI-16 4

Record of Applicable Technical Directives

None

1. GENERAL INFORMATION.

NOTE

The installation criteria in this WP is for reference only. New systems should not be installed. Only PAPI systems (WP003 12) are to be used for new installations.

2. PURPOSE.

This Work Package (WP) contains the requirements for the Visual Approach Slope Indicator (VASI) systems. The VASI system provides the pilot with visual approach slope angle information while on final approach. The VASI system is helpful during day or night operations and for Visual Flight Rules (VFR) and Instrument Flight Rules (IFR) operations (WP002 00). These requirements apply only for existing VASI installations. For complete replacement use Precision Approach Path Indicator (PAPI) System (WP003 12).

3. JUSTIFICATION REQUIREMENTS.

Existing VASI systems may be maintained only for approaches to runways for which existing visual cues do not provide adequate approach path angle guidance. Approaches equipped with a Precision Approach Path Indicator (PAPI) System (WP003 12) should not install a VASI system. Approvals for deviations from these requirements shall follow the procedures in WP002 00.

~~**NOTE**~~

~~**The installation criteria in this WP is for reference only. New systems should not be installed. Only PAPI systems (WP003 12) are to be used for new installations.**~~

4. Criteria For Justifying A VASI System.

Conditions that may justify the requirement for a VASI installation are:

c. The runway is used by aircraft with such characteristics that the approach angle must be maintained within close limits including speed and rate of descent.

d. The runway is situated in an area where the pilots of some aircraft may have difficulty in judging the proper approach angle for any of the following reasons:

(1) The approach is over water or featureless terrain that does not provide adequate visual cues.

(2) Absence of sufficient extraneous lights in the approach area at night.

(3) Visual information is misleading; e.g., deceptive terrain or sloping runways may cause false impressions.

e. Objects in the approach area which may be a serious hazard if an aircraft descends below the normal approach path.

f. Conditions at the runway ends may present special hazards to aircraft undershooting or over-running the runway.

g. Terrain or meteorological conditions that create severe or unusual turbulence along the approach path.

5. RELATED FACILITIES.

The use of a VASI system during daylight hours may not require additional visual aids, except runway markings (WP004 01), but may be used with any other aids except the OLS or PAPI. To use the VASI at night requires the use of the following lights:

a. Runway edge lights (WP004 05).

b. Runway threshold lights (WP004 02).

c. Runway end lights (WP004 04).

6. DESCRIPTION.

DRAFT

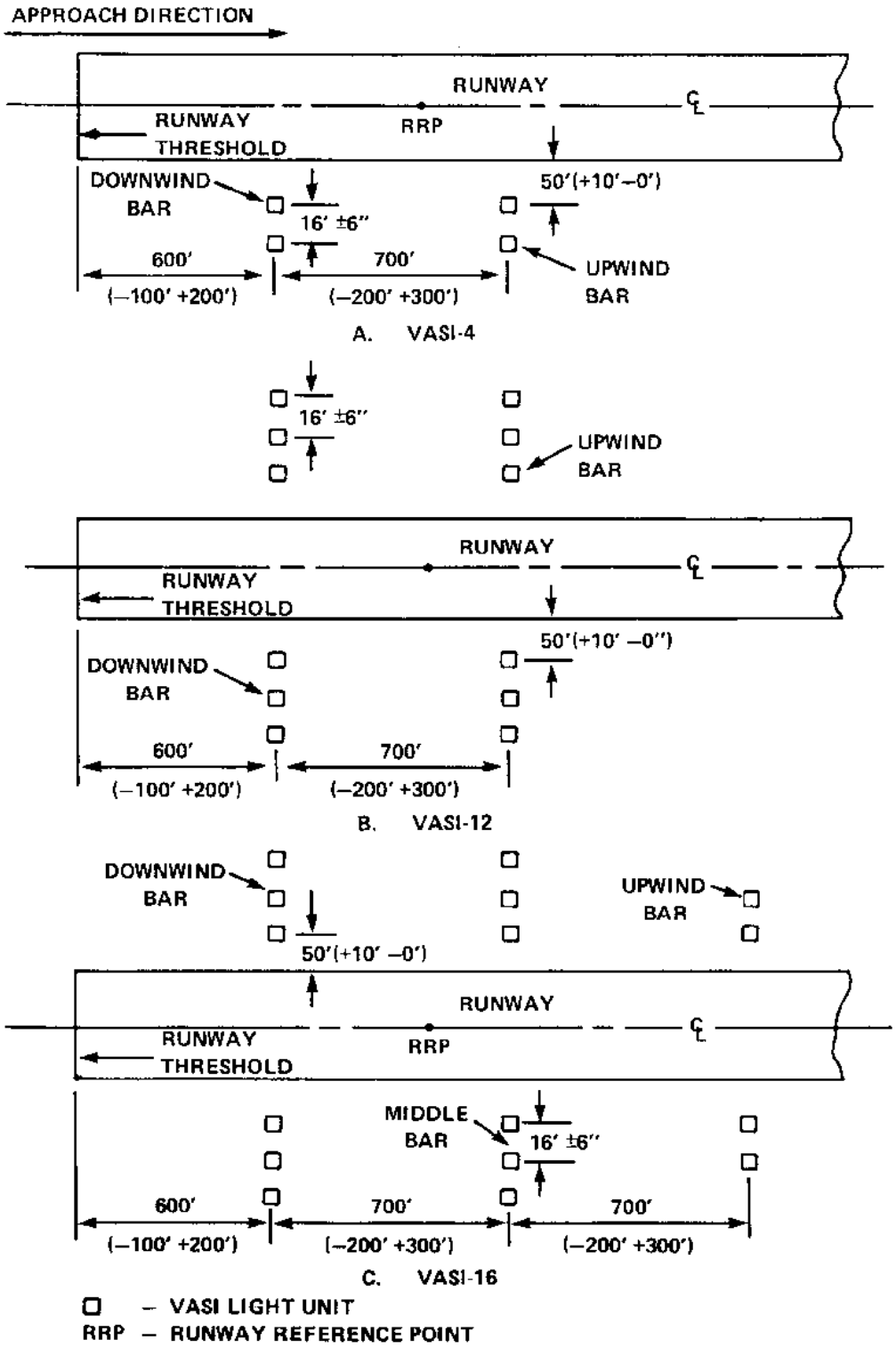

NOTE: THE CENTERLINE OF THE INBOARD LIGHT UNITS SHALL BE NOT LESS THAN 50' OR MORE THAN 60' FROM THE RUNWAY EDGE.

Figure 1. Typical configurations for VASI systems

7. GENERAL.

The VASI system consists of several light units arranged in two or three bars near the edges of the runway in the touchdown zone (figure 1). Each light unit projects a beam, fan-shaped in azimuth and split vertically with a white sector above and a red sector below. The light units are arranged in rows or bars on one or both sides of the runway. Each bar consists of two or three light units. If the bars are on both sides of the runway, the opposite bars shall be in the same line. The bar nearest the runway threshold is referred to as the downwind bar. The bar farthest from the threshold is the upwind bar. If the system has three bars, the bar between the others is the middle bar. A pilot making an approach and observing a two-bar VASI system will see one of the following configurations:

a. On the established approach path angle, the downwind bar will be white and the upwind bar will be red.

b. Below the established approach path angle, both bars will be red.

c. Above the established approach path angle, both bars will be white. In the transition sector where the light changes color, a narrow sector of the beam may appear to be pink. For a three-bar VASI system, which creates two approach path angles, the pilot uses the approach path angle established for his type of aircraft, and the third bar, although visible, is not part of his guidance system.

8. VASI-4.

The VASI-4 system is a two-bar, four light unit system. There are two light units in each bar and are located only on one side, usually the left, of the runway (figure 1A). Some Navy airfields may have this system.

9. VASI-12.

The VASI-12 system is a two-bar, 12 light unit system. There are three light units in each bar located on both sides of the runway (figure 1B). This is the system for joint use airfields with international civilian airline operations and some existing VASI installations at Navy airfields use this system.

10. VASI-16.

The VASI-16 system is a three-bar, 16 light unit system. There are three light units in each bar located on both sides of the runway for the downwind and middle bars and two lights on each side of the runway for the upwind bar (figure 1C). This system is used for airfields qualified for international civilian operations using large aircraft.

NOTE

Some runways may have nonstandard VASI configurations. These installations should be identified by the number of bars and the number of light units. For example, one-half of VASI-12 on one side of the runway should be called a two-bar six-unit VASI, not a VASI-6.

11. INSTALLATIONS.

12. INSTALLATION REQUIREMENTS.

~~For details of the VASI installations refer to NAVFAC P-272.~~ All light units are elevated lights and shall be installed on stable concrete pads or bases. Each leg or support of the unit shall be mounted on a frangible coupling. General design and installation requirements are given below.

13. LOCATIONS AND DIMENSIONS.

(Figure 1.) The light units in each bar shall be perpendicular within ±1 degree to the runway centerline. If the bar is on both sides of the runway each bar shall be symmetrical about the runway centerline.

14. Determining The Runway Reference Point (RRP) And The Approach Path Angle.

The primary controlling factors for locating the bars are the Runway Reference Point (RRP) and the approach path angle. For approaches with precision electronic approach aids, such as Instrument Landing Systems (ILS), or Precision Approach Radar (PAR), the RRP and approach path angle are determined by the electronic aids installation. Normally approach path angles are 3 degrees. For some approaches, the location of the RRP and the approach path angle may have to be determined in designing the VASI installation, but they should conform to Air Traffic Control and Air Operations procedures. The preferred approach angle is three degrees and the RRP 950 to 1000 feet from the runway threshold. Local conditions that affect the location of the RRP and the approach path angle may include the following:

a. Aircraft Size and Attitude. The most critical aircraft using the VASI system shall have a minimum wheel clearance at the threshold of not less than 30 feet. The pilot's eye height will be several feet higher and should be considered in establishing the RRP.

b. Obstructions or Severe Turbulence Areas. Obstructions and hazards in the approach area or for approaches with frequent severe turbulence problems shall be provided with a safe minimum clearance. The low signal (red) of the downwind bar shall be not less than 20 feet plus 0.75 degree over any obstruction. Turbulence problems in the approach area may be aided by locating the VASI farther from the threshold. This may increase the RRP distance or in some cases require a steeper approach path angle.

c. Length of Runway. Shorter runways may require locating the VASI nearer the runway threshold to provide a maximum length for landing rollout.

d. Airfield Traffic Areas Configuration. No VASI light unit centerline may be less than 75 feet from the edge of any other runway, taxiway, or apron area.

e. Heavy Snowfall Areas. If the VASI light unit aperture is more than 12 inches above the crown of the runway to provide clearance from snow accumulation, the location of the VASI bars shall be placed nearer the threshold to allow for the projected distance to the runway surface. The RRP is not shifted for this adjustment.

15. Location Of The VASI Bars.

(See figure 1.) The preferred locations are 600 feet from threshold to the downwind bar and at 700-foot intervals for the other one or two bars. The RRP is normally located midway between the downwind and upwind bars of two-bar VASIs or downwind and middle bar of three-bar VASIs installations. Because of problems discussed above in determining the position for the RRP, VASI bars may placed at other than the preferred locations, but the downwind bar shall not be less than 500 feet or more than 800 feet from the runway threshold. The other bar or bars shall be not less than 500 feet or more than 900 feet from the adjacent bar.

16. Location Of The Light Units.

The centerline of the innermost light unit of each bar shall be not less than 50 feet and not more than 60 feet from the runway edge and not less than 75 feet from the edge of any other runway, taxiway, or apron area. The inmost light units of all bars of the system shall be the same distance from the runway edge. The light units for each bar shall be equally spaced at 16 feet ±6 inches on centers starting from the inmost light units. The elevation of the horizontal apertures of the light units shall be within ±12 inches of the crown of the runway, except in areas with deep snow accumulations (see Paragraph 14e). There the light units may be installed with the apertures not to exceed 48 inches above the ground surface. For installations with light units on both sides of the runway, the elevations of the lights on opposite sides shall not differ by more than 12 inches. The apertures of the light units in a bar may have a tolerance of ±1 inch horizontally and vertically from the line of the bar.

17. AIMING.

The light units shall normally be aimed horizontally with the axes of the beams parallel to the runway centerline. One side of the beam may be baffled or shielded to avoid projecting the visual signal at or within two degrees of an obstruction hazard in or near the approach area. The vertical aiming shall use the aiming line and aiming device designed or specified by the manufacturer. This aiming shall be accurate to ±2 minutes of arc (figure 2). All light units in a bar shall be aimed at the same angle as follows:

a. The upwind and middle bar lights shall be aimed above the horizontal at the same angle as the established approach path angle as shown in figure 2.

b. The downwind bar lights shall be aimed 0.5 degree less than the approach path angle and the upwind bar lights.

18. EQUIPMENT.

The approved equipment for VASI systems is given in table 1. A typical VASI light unit is shown in figure 3. Each unit has three incandescent light sources projecting their beams through a filter or lens-filter and through a narrow horizontal slot or aperture. The beam projected from the aperture is white over red.

19. PHOTOMETRIC CHARACTERISTICS.

Each light unit shall have the following characteristics:

a. Colors. The colors of the emitted light shall be in accordance with ICAO Annex 14, Vol. 1, App. 1.

b. Intensity. The minimum peak intensity at rated current shall be 60,000 candelas in white and 12,000 candelas in red.

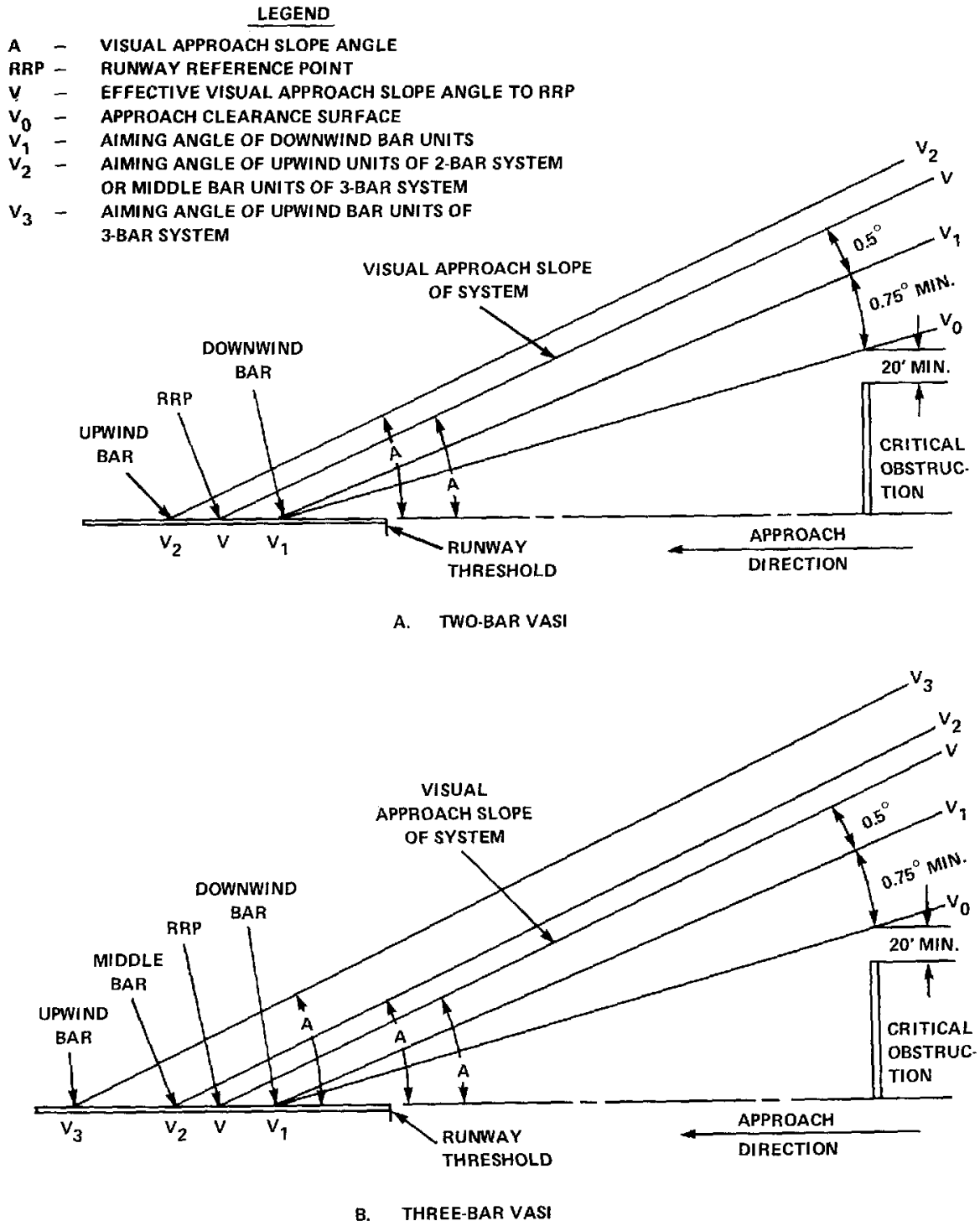

Figure 2. Aiming diagram for VASI systems

TABLE 1. SCHEDULE OF EQUIPMENT FOR VASI SYSTEMS

Purpose and Type of Fixture	Lamp Rating and Type	Isolation Transformer		
		Rating	MIL Type[2/] MIL T-27535	FAA Type[2/] AC 150/5345-47
VASI light units, all systems[1/]				
FAA AC 150/5345-52, type L-882 VASI	300W 6.6A Q6.6A/PAR64/3P	300W 6.6/6.6A (3 each unit)	MS27134-1	L-830-10
Regulator, constant-current, for VASI-4[1/]				
FAA AC 150/5345-10, type L-828, size 10, type I, style II, 4 to 10KW, 6.6A output, 5-steps.				
Regulator, constant-current, for VASI-12 or VASI-16[1/]				
FAA AC 150/5345-10, type L-828, size 15, type I, style II, Class II, 15KW, 6.6A output, 5-step, 2400 V input.				

[1/] The number of light units is 4 for VASI-4, 12 for VASI-12, and 16 for VASI-16.
[2/] Either Military or FAA types may be used, but a single type for each system is preferred.

c. Beamspread. The beamspread at 5,000 candelas white and 1,000 candelas red shall be not less than the following:

(1) Horizontal - 18 degrees

(2) Vertical - white 3 degrees above the transitions sector
- red 3 degrees below the transition section

d. Transition sector. This sector may be pink in color between the white and red sectors and shall be a maximum of 15 minutes of arc vertically.

20. POWER AND CONTROLS.

21. POWER.

The electrical power for the VASI system shall be from a 6.6A series circuit energized by a separate constant-current regulator through an isolation transformer for each lamp (three lamps for each light unit). The constant-current regulator (WP009 02) shall have adequate capacity for the system, 6.6 amperes output, and five intensity steps. The regulator should be 4 to 10KW for a VASI-4 and 15KW for a VASI-12 or VASI-16. Emergency power is not essential, but if available, it should be used with the same emergency transfer as for the HIRL. Monitoring is not required.

22. CONTROLS.

The preferred controls shall be by remote control from the Air Traffic Control tower with alternate control from the airfield lighting vault (WP009 00). Both the power on-off control and the 3- or 5-step intensity control shall be from the airfield lighting control panel (WP009 05). The intensities for 5-step control shall be 100, 20, 4, 0.8 and 0.16 percent of rated intensity for corresponding intensity steps 5, 4, 3, 2, and 1. If it is not practical to provide separate remote control such as from a local source the VASI may be automatically controlled by a photoelectric switch. For automatic control, the VASI is at 100 percent intensity during daytime and at 4 percent intensity at night only when the runway edge lights are operating. The lower power setting selected by the photoelectric switch at night is also controlled by a current-sensing relay connected to the runway edge light circuit.

23. CERTIFICATION.

The VASI System requires an annual certification procedure be accomplished in accordance with NAEC-91-8071, “Certification Test Procedure for Visual Approach Slope Indicator System.”

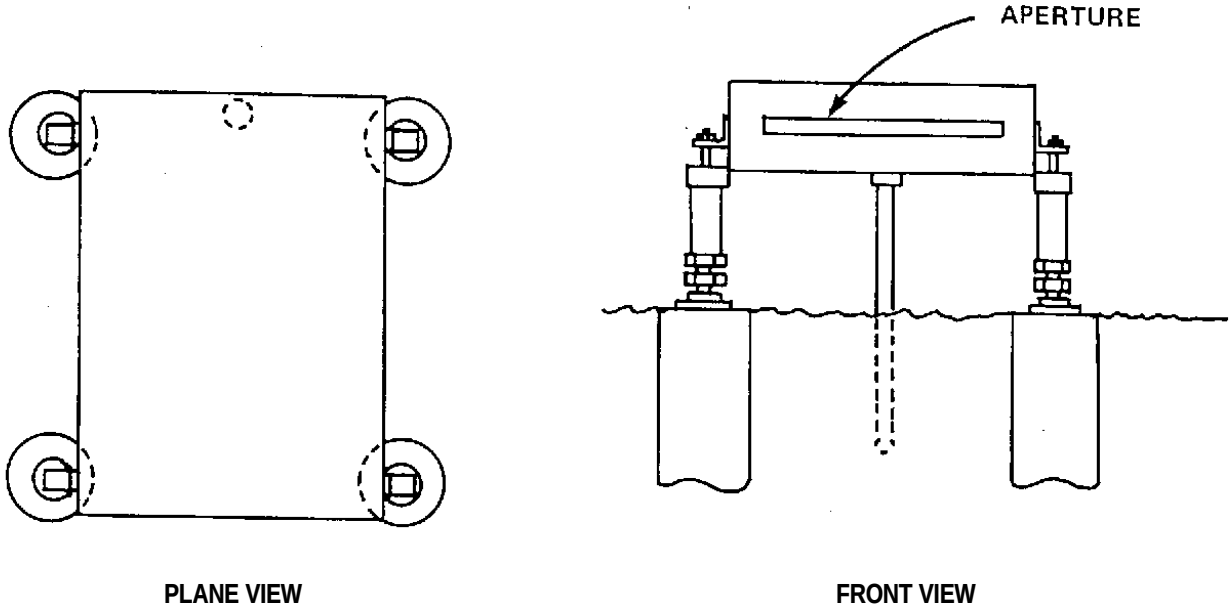

LIGHT UNIT: FAA AC 150/5345-28, TYPE L-851 VASI,

LAMP: THREE 300W 6.6A, TYPE Q6.6A/PAR64/3P.

ISOLATION TRANSFORMERS: THREE 300W 6.6/6.6A, FAA AC 150/5345-47, TYPE L-830-10

Figure 3. Typical VASI light unit, type L-851

DRAFT

TECHNICAL MANUAL

PRECISION APPROACH PATH INDICATOR (PAPI) SYSTEM

SHOREBASED AIRFIELDS

Reference Material

Introduction 002 00
~~Definitive Designs for Naval Shorebased Facilities ..... NAVFAC P-272~~
Visual Approach Slope Indicator (VASI) Systems 003 11
Optical Landing Aids (OLA) 003 13
Runway Markings 004 01
Runway Threshold Lights 004 02
Runway End Lights 004 04
High-Intensity Runway Edge Lights (HIRL) 004 05
Runway Centerline Lights (RCL) 004 06
Electrical Power and Control for Visual Aids 009 00
Auxiliary Power and Power Transfer Equipment 009 01
Constant-Current Regulators 009 02
Airfield Lighting Control Panels 009 05
Specification, Four-Box Precision Approach Path Indicator FAA-E-2765
Design Drawings for Visual Air Navigation Facilities ..... UFC 3-535-02
Aeronautical Ground Light and Surface Marking Colors ..... ICAO, Annex 14, Vol. 1, App. 1
Specification L-828, Constant-Current Regulators ..... FAA AC 150/5345-10
Precision Approach Path Indicator (PAPI) Systems ..... FAA AC 150/5345-28
Isolation Transformers for Airport Lighting ..... FAA AC 150/5345-47

Alphabetical Index

Subject **Page No.**

Aiming 4
Approach Slope Angle 4
Certification 7
Controls 7
Criteria For Justifying A PAPI System 2
Description 4
Dimensions 4
Equipment 6
Fixtures. 6
General Information. 2
Installation Requirements 4
Installations 4
Justification Requirements. 2
Location. 4
Photometric Characteristics 6
Power. 7
Power And Controls 7
Purpose. 2

DRAFT

Related Facilities..... 2
Schedule Of Equipment For PAPI Systems 6
Tolerances..... 6

Record of Applicable Technical Directives

None

1. GENERAL INFORMATION.

2. PURPOSE.

This Work Package (WP) contains the requirements for the Precision Approach Path Indicator (PAPI) systems. The PAPI system provides the pilot approaching for a landing with approach slope angle information and assists him in intercepting and maintaining the correct approach slope angle. The PAPI system provides this information during the day and night for Visual Flight Rules (VFR) and Instrument Flight Rules (IFR) operations as low as Category I conditions (WP002 00).

3. JUSTIFICATION REQUIREMENTS.

A PAPI system shall be installed for an approach to any runway for which existing visual cues do not provide adequate approach slope guidance or where more accurate touchdown position is desired. Approaches equipped with an operational Optical Landing Aids (OLA) (WP003 13) should not install a PAPI system. However, a PAPI system may replace a VASI installation. Approval for deviations for these PAPI requirements shall follow the procedures in WP002 00.

4. Criteria For Justifying A PAPI System.

Conditions that may justify the requirement for a PAPI installation are:

a. When the runway is used by aircraft with such characteristics that the approach angle must be maintained within close limits including speed and rate of descent.

b. When the runway is situated in an area where the pilots of some aircraft may have difficulty in judging the proper approach angle for any of the following reasons:

(1) The approach is over water or featureless terrain that does not provide adequate visual cues.

(2) Lack of sufficient extraneous lights in the approach area at night.

(3) Visual information is misleading, as may be produced by deceptive terrain or slope of the runway.

c. Objects in the approach area which may be a serious hazard if an aircraft descends below the normal approach path.

d. Conditions at the runway ends may present special hazards to aircraft undershooting or over-running the runway.

e. Terrain or meteorological conditions that create severe or unusual turbulence along the approach path.

f. The runway length is short and there is serious danger of overrun if the touchdown is long.

5. RELATED FACILITIES.

The use of a PAPI system provides approach slope information independent of other visual aids. However, it does not provide longitudinal alignment information. This alignment information is provided by the runway markings (WP004 01) during the day and by the following runway lights at night:

a. Runway edge lights (WP004 05),

b. Runway threshold lights (WP004 02),

c. Runway end lights (WP004 04), and

d. Runway centerline lights (WP004 06), if available.

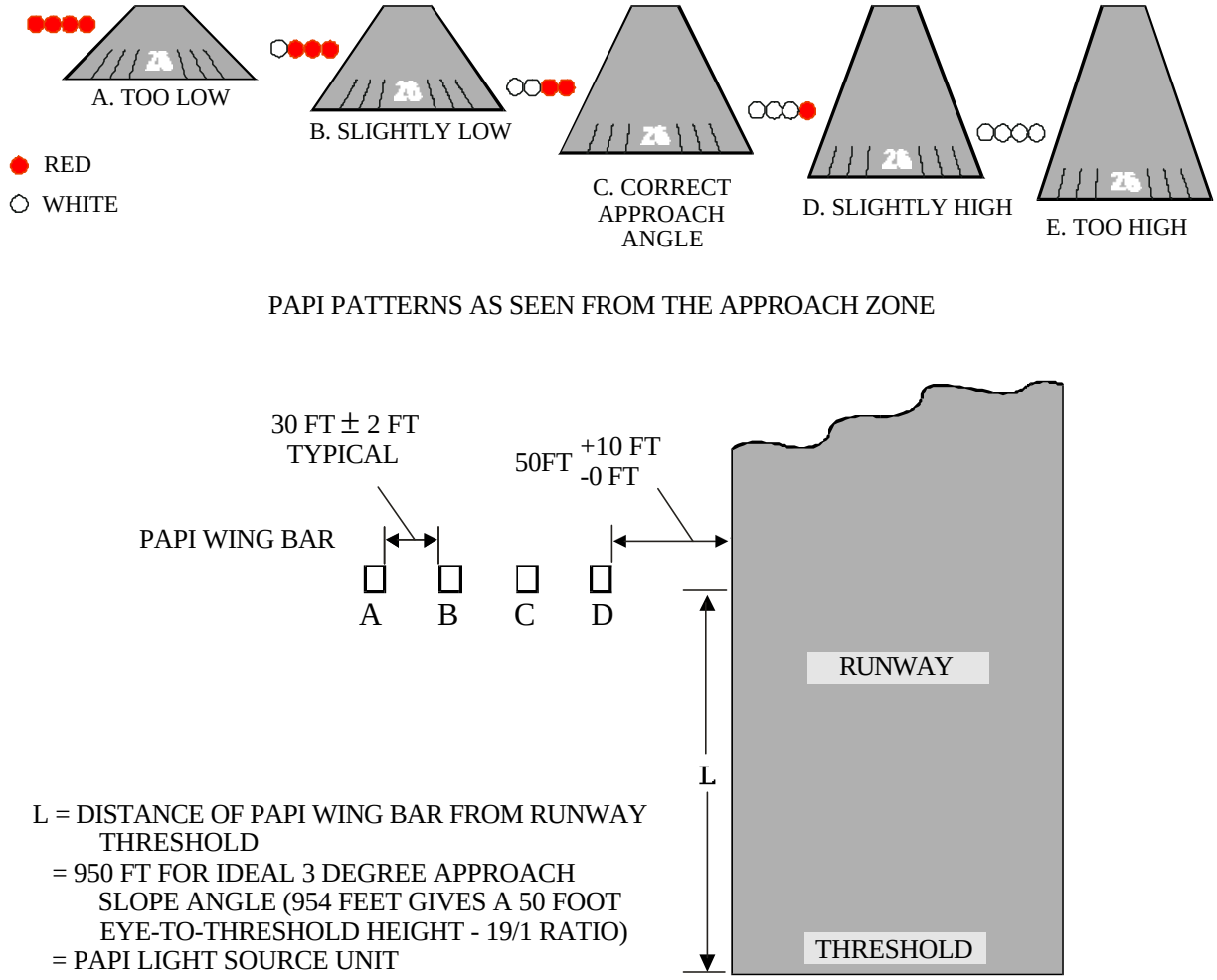

Figure 1. Typical PAPI layout and approach patterns

6. DESCRIPTION.

7. The PAPI system consists of four light source units arranged in a wing bar near the edges of the runway in the touchdown area. Each light unit consists of two or more lamps and projects a beam of light, fan-shaped in azimuth and split vertically with a white sector above and a red sector below the transition zone. Each light unit is aimed at a slightly different elevation angle to present a different color pattern to a pilot on final approach depending on his position relative to the established approach slope (figure 1). When observed from the ideal approach slope the two inboard light units are seen as red and the two outboard units as white. If more light units are red, the pilot is too low, and if more are white, he is too high. The lights also provide information on how much too high or too low he is. The four light units are operated simultaneously whenever this runway approach is active.

8. INSTALLATIONS.

9. INSTALLATION REQUIREMENTS.

For details of the PAPI installations refer to ~~NAVFAC P-272~~**UFC 3-535-02**. The light units shall be installed on stable concrete bases and mounted on a frangible coupling. General design and installation requirements are given below.

10. LOCATION.

The PAPI system location for an ideal installation shall be as shown in figures 1 and 2. The wing bar shall be in a horizontal line at 90 ±1 degrees to the runway centerline and should be on the left hand side of the runway as observed from the approach zone. To avoid intersecting runways or taxiways or other major installation problems, the PAPI may be located on the right side of the runway. The individual light units shall not be more than 3 inches longitudinally or in elevation from the line for the wing bar. The elevation of the line of the wing bar at the exit lenses or windows should be not more than 12 inches above or below the runway centerline elevation at this line, except in areas of deep snow accumulation the height above the runway may be increased. The location of the edge of the light unit nearest the runway shall be not less than 50 feet or more than 60 feet from the runway edge with 50 feet preferred. The other units shall be equally spaced at 30 ±2 feet. The preferred distance (L) of the wing bar upwind from the runway threshold should be 1000 ±100 feet. The actual location of this wing bar may be affected by the following conditions:

a. The distance L shall be such as to have the visual approach slope coincide with the established glide path angle of the Precision Approach Radar (PAR), the Instrument Landing System (ILS), or other precision electronic approach aid.

b. No light source unit shall be less than 75 feet from the edge of any other runway or any taxiway.

c. The distance L shall ensure the minimum wheel clearance at threshold, usually 30 feet, of the most critical aircraft normally using the runway or of obstacle clearance when the pilot is at or above the transition sector from red to white for the light source unit with lowest vertical aiming angle.

d. The distance L shall be adjusted to compensate for the differences in elevation between the light exit windows and the runway threshold for sloping runways or for extra high installations to clear snow accumulations.

e. The distance L shall provide adequate landing distance for stopping the most critical aircraft using this approach.

11. AIMING.

The light source units shall be aligned in azimuth with the axes of the beams parallel ±2 degrees to the runway centerline. The aiming in elevation of the transition from the red sector to the white sector shall be as shown in figure 2 for the established approach slope angle which is normally 3 degrees. The differential increments in elevation angles shall be progressive from one unit to the next with light unit A, the unit farthest from the runway edge, having the lowest elevation angle, and light unit D, the unit nearest the runway, having the highest elevation angle. The arithmetic mean of the angles for light units B and C, (angle B + angle C)/2, shall equal the established approach slope angle. For approach slope angles other than 3 degrees, the elevation angle aiming shall be as follows:

a. Lights units B and C shall be aimed so the arithmetic mean of their angles is the established approach slope angle. The preferred approach angle is 3 degrees but other angles may be established for one of the following reasons:

(1) To provide not less than 1.2 degrees clearance of any obstruction.

(2) To coincide with the approach angle established for the electronics approach aids.

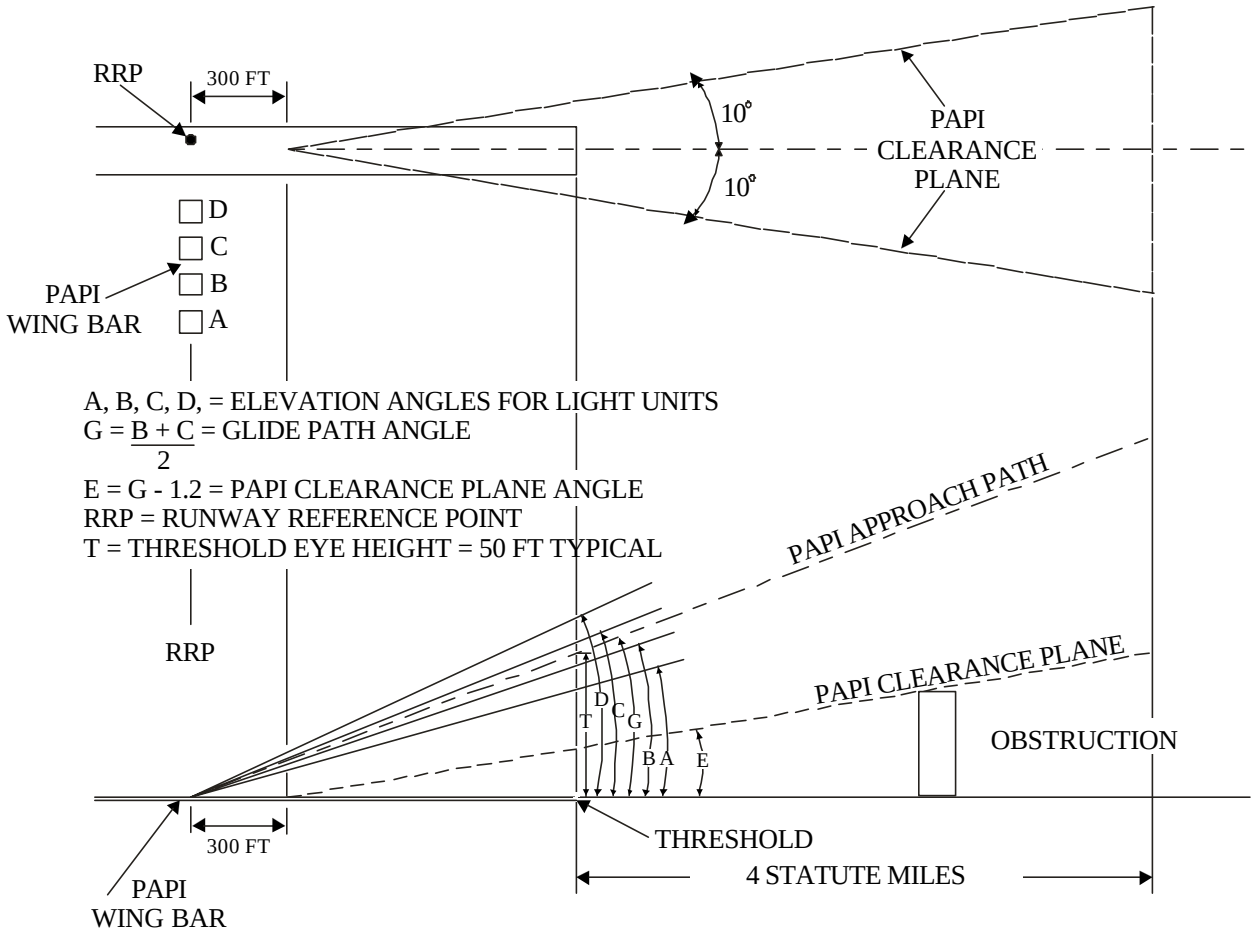

Figure 2. Typical PAPI clearance plane and elevation aiming

TABLE 1. SCHEDULE OF EQUIPMENT FOR PAPI SYSTEMS

Purpose and Type of Fixture	Lamp Rating and Type	Isolation Transformer	
		Rating	FAA Type AC 150/5345-47
	Light source units, (4).		
FAA AC 150/5345-28, type L-880, style B	Two or three, 6.6A, type and watts as determined by manufacturer.	Two or three, 6.6/6.6A, watts as required.	Type as required by wattage
	or		
FAA-E-2756	Three, 6.6A, type and watts as determined by manufacturer.	Three, 6.6/6.6A, watts as required	Type as required by wattage
	Constant-current regulator, (1).		
FAA AC 150/5345-10, type L-828, 4KW 240V input, 6.6A output, 5-step intensity control.			

(1) To provide the required threshold clearance height for wide-body or other aircraft with extra cockpit height when in the landing configuration.

(2) To provide the correct approach angle for helipads or other landing areas requiring specific approach angles.

b. The differential setting angle between adjacent units shall be:

Approach Angles	Differential Setting Angle
2° to 4°	00° 20’
4° to 7°	00° 30’
over 7°	01° 00’

The tolerances for setting the elevation angles shall be not more than 2 minutes of arc.

12. EQUIPMENT.

13. FIXTURES.

The approved fixtures for PAPI systems are given in table 1. A typical light unit is shown in figure 3. Each light unit shall have not less than two lamps and usually not more than three lamps. The lamps or sources may be enclosed in a single housing or in separate housings assembled as a unit. The light units shall provide for elevation aiming of the transition plane over a range not less than 2 to 6 degrees above the horizontal. If one lamp fails, the other lamps in the light unit shall continue to operate.

14. PHOTOMETRIC CHARACTERISTICS.

Each light source unit shall have the following characteristics:

a. The peak intensity from the light unit at rated current shall be not less than 30,000 candelas in aviation white and 15,000 candelas in aviation red. The maximum intensity should be less than 200,000 candelas.

b. The intensity-beamspread of a light unit at rated current shall be not less than shown in figure 4.

c. The transition zone from red to white shall be not more than 3 minutes of arc at the center of the beam and not more than 5 minutes of arc at 10 degrees horizontally to either side of the beam axis.

d. The transmittance of the red filters shall be not less than 0.15.

e. The aviation white and aviation red light shall be in accordance with ICAO, Annex 14, Vol. 1, App. 1.

LIGHT SOURCE UNIT: FAA AC 150/5345-28, TYPE L-880 OR L-881 OR FAA-E-2756

LAMP: TWO OR THREE 6.6A, TYPE AS REQUIRED BY MANUFACTURER.

ISOLATION TRANSFORMER: TWO OR THREE 6.6/6.6A FAA AC 150/5345-47, TYPE AS REQUIRED FOR WATTS.

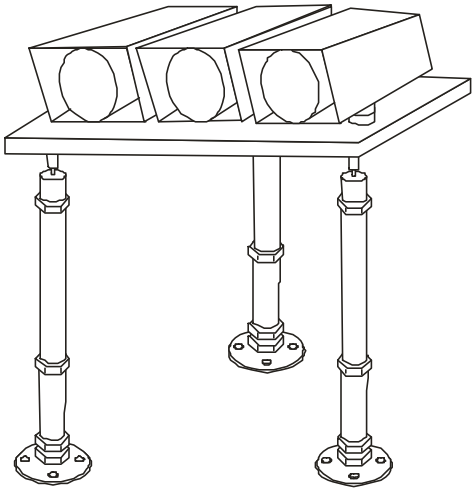

Figure 3. Typical PAPI light source unit

f. The lights shall be provided with three or five intensity steps.

15. POWER AND CONTROLS.

16. POWER.

The electrical power for the PAPI system shall be from a 6.6A series circuit (WP009 00). The circuit shall be energized by a constant-current regulator (WP009 02). This regulator should be a FAA type L-828 4KW with five intensity steps. The lights shall be connected to the series circuit by series isolation transformers of suitable capacity for each lamp. Emergency power is not essential but it should be used if available. The emergency transfer of power (WP009 01) should be the same as the runway edge lights. Monitoring of the PAPI is not required except for daily visual checks of operations.

17. CONTROLS.

The controls for the PAPI shall be by remote control from the Air Traffic Control tower with alternate control from the airfield lighting vault (WP009 00). Both the power on-off control and the 5-step intensity control shall be at the airfield lighting control panel (WP009 05). The intensities shall be 100, 20, 4, 0.8 and 0.2 percent of rated intensity corresponding to intensity steps 5, 4, 3, 2, and 1. If it is not practical to provide remote control, the PAPI may be automatically controlled by a photoelectric switch with power from a local source instead of the vault. For automatic control, the PAPI is at 100 percent intensity (step 5) during daytime and at 4 percent intensity (step 3) at night. The PAPI should operate at night only when the runway edge lights are operating.

18. CERTIFICATION.

The PAPI System requires an annual certification procedure be accomplished in accordance with NAEC-91-8082, “Navy Precision Approach Path Indicator Certification Requirements.”

DRAFT

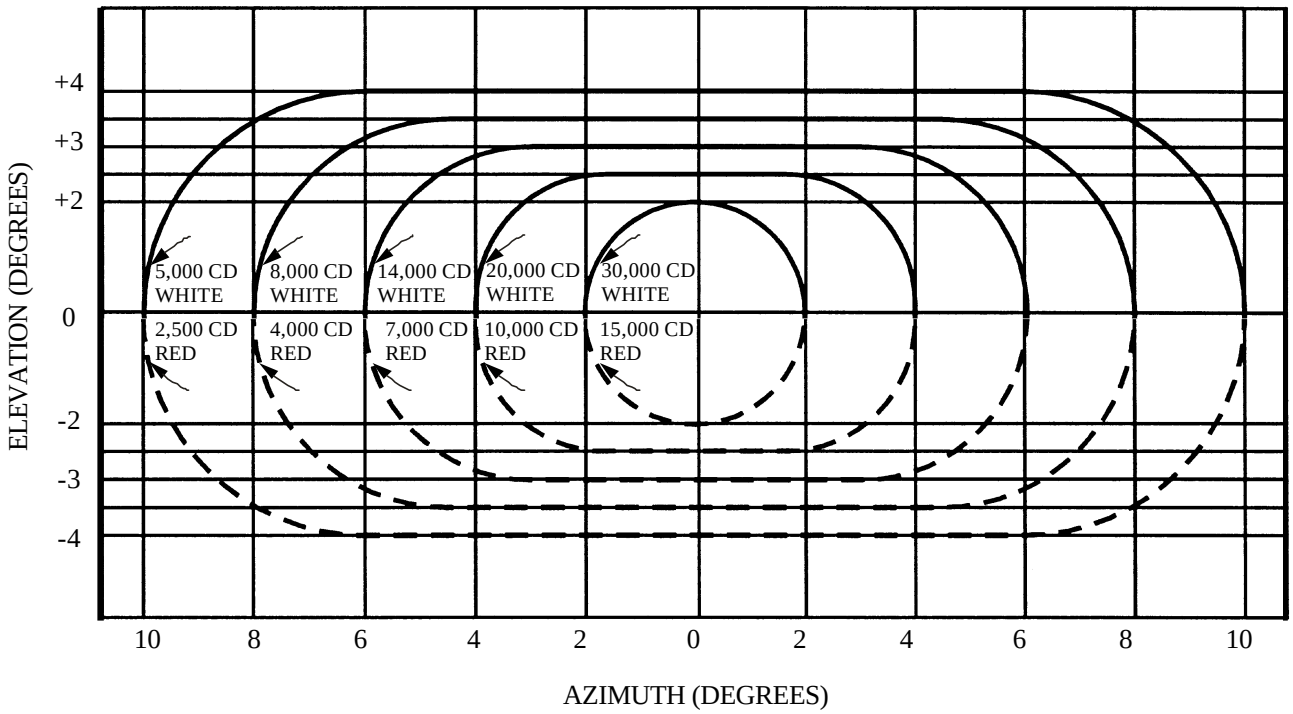

Figure 4. Intensity requirements for PAPI light unit

DRAFT

TECHNICAL MANUAL

OPTICAL LANDING AIDS (OLA)

SHOREBASED AIRFIELDS

Reference Material

Design Drawings for Visual Air Navigation Facilities ..... UFC 3-535-02
~~Definitive Designs for Naval Shorebased Facilities ..... NAVFAC P-272~~
Portable Shore-Based Fresnel Lens Optical Landing System MK 8 MOD 0 ..... NAVAIR 51-40ABA-14
Portable Shore-Based Fresnel Lens Optical Landing System MK 8 MOD 1 ..... NAVAIR 51-40ABA-15
Portable Shorebased Improved Fresnel Lens Optical Landing System MK14 MO00 ..... NAVAIR 51-40ABA-24
Manually Operated Visual Landing Aids System MK 2 MOD 2 ..... NAVAIR 51-40ACA-3
Runway Markings 004 01
High-Intensity Runway Edge Lights (HIRL) 004 05
Runway Centerline Lights (RCL) 004 06
Simulated Carrier Deck Lights and Markings 006 04
Auxiliary Power and Power Transfer Equipment 009 01
Aeronautical Ground Light and Surface Marking Colors ..... ICAO, Annex 14, Vol. 1, App. 1

Alphabetical Index

Subject **Page No.**
Controls 6
Cut Lights 2
Datum Lights 2
Description 2
Dimensions 4
Equipment 4
Fresnel Lens Optical Landing System (FLOLS) 2
General Description. 2
General Information. 2
Installation Requirements 4
Installations 4
Justification Requirements. 2
Locations. 4
Manually Operated Visual Landing Aid System (MOVLAS) 4
Meatball 2
OLA Site 4
OLA Systems. 2
Photometric Requirements. 4
Power. 6
Power And Controls 6
Purpose. 2
Related Facilities 2
Source Lights 2
Wave-off Lights 2

Record of Applicable Technical Directives

None

1. GENERAL INFORMATION.

2. PURPOSE.

This Work Package (WP) contains the requirements for Optical Landing Aids (OLA) for shorebased airfields. The purpose of the OLA is to provide the pilot approaching for a landing with a visual signal to assist in intercepting and maintaining the correct approach glide slope. The OLA is a required visual aid for landings on aircraft carriers, but on shorebased airfields the OLA is primarily an aid for training or practice. The OLA may be used during day or night operations and in all weather conditions.

3. JUSTIFICATION REQUIREMENTS.

Each runway landing area with or programmed for a simulated carrier deck lighting installation shall be provided with a site installation and OLA equipment. Most OLA systems are portable and may be moved to different sites as the approach runway is changed. The use of OLA is intended for runway ends with simulated carrier deck lighting. Airfields without simulated carrier deck lights may have a need for proficiency that justifies the installation of OLA sites and equipment.

4. RELATED FACILITIES.

Each simulated carrier deck lighting installation (WP006 04) should be provided with an OLA system. The OLA provides approach glide slope information independent of other visual aids; however, it does not provide longitudinal alignment information. The alignment information is obtained from the runway centerline markings (WP004 01) during the day and runway edge lights (WP004 05) or runway centerline lights (WP004 06) at night and during low visibility conditions.

5. <u>DESCRIPTION.</u>

6. GENERAL.

The OLA systems are located near the touchdown point on the runway and consist of the following lighting components:

a. Source lights. The source lights are a yellow line of lights or images often referred to as the "meatball." Some systems present a red signal when the aircraft is too low. The source lights may be formed by reflections in a special mirror or a vertical stack of lens cells or closely spaced lights.

b. Datum lights. The datum lights are a horizontal bar of green lights that provides a visual reference for determining the aircraft's position in relation to the ideal approach glide path. The datum lights bar is in two groups of lights with a group on each side of the source lights. The visual signals presented to a pilot making an approach for landing are the same as his position relative to the glide slope path. If the source light appears to be above the datum lights he is too high, or if the source light appears to be below the datum lights he is too low and should adjust his approach path angle to obtain the correct on glide-path signal with the source light in line with the datum lights.

c. Wave-off lights. The wave-off lights are flashing red lights along each side of the source lights. The wave-off lights are activated only to inform the pilot that he must execute a missed approach procedure.

d. Cut lights. Some optical landing systems have flashing green lights located above the source lights which are activated to instruct the pilot of propeller-driven aircraft to cut engine power.

7. OLA SYSTEMS.

The FLOLS is a fixed signal system which automatically indicates to the pilot his position in relation to the established glide path. The MOVLAS is a temporary replacement system for which the LSO controls the position of the source (meatball) light.

a. Fresnel Lens Optical Landing System (FLOLS). The FLOLS consists of five yellow source light cell assemblies arranged vertically, 12 green datum lights, 10 red wave-off lights, and some models have 4 green cut lights (figure 1). The stack of lens cells are all lighted but usually only one cell is visible to the pilot. The relation of this cell to the datum lights indicates the pilot's position relative to the proper glideslope. These lights are trailer-mounted for portability to move from one site to another.

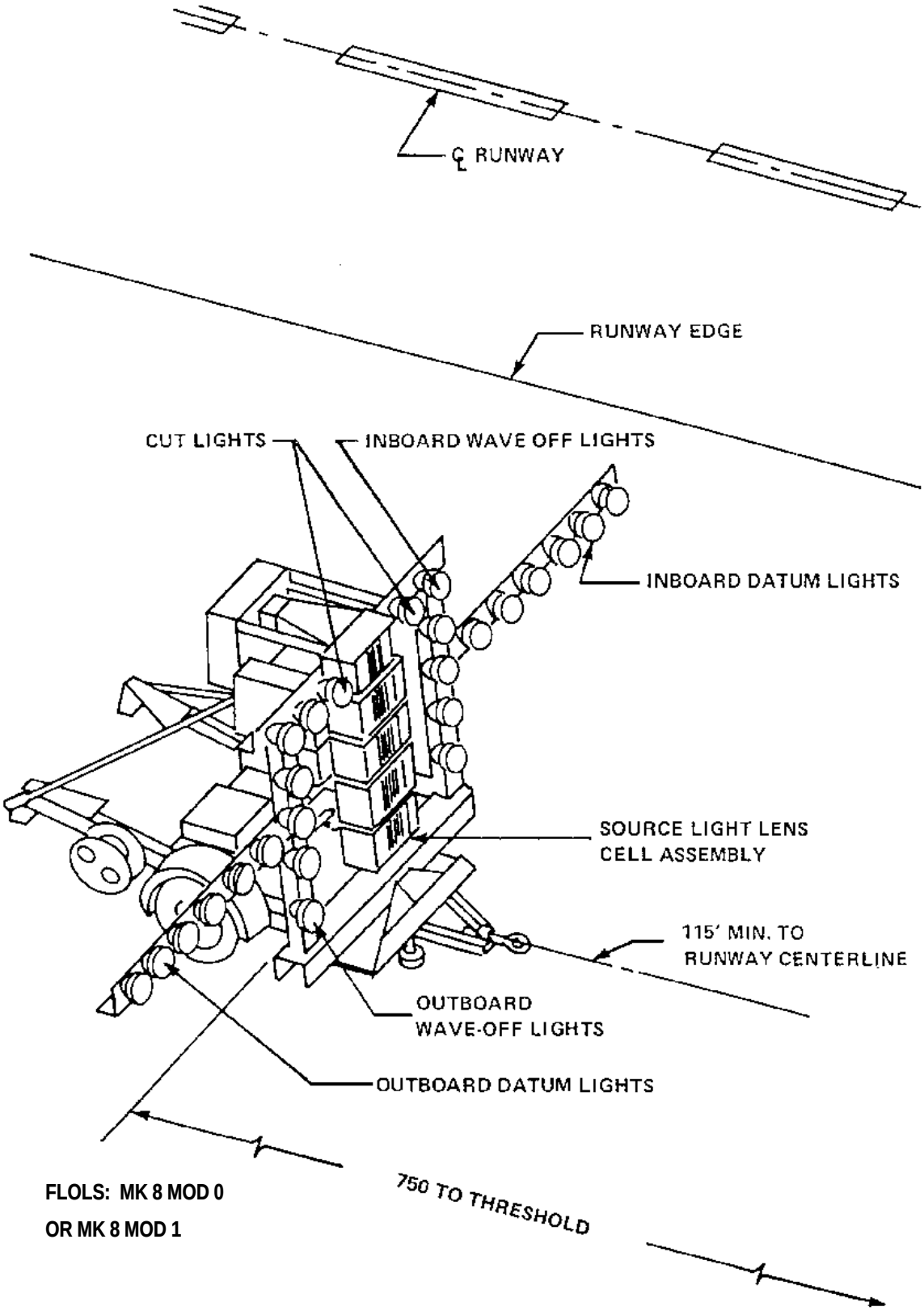

Figure 1. A typical Fresnel lens optical landing system (FLOLS)

~~a.~~**b.** Manually Operated Visual Landing Aid System (MOVLAS). The MOVLAS is an emergency system to be used when the FLOLS or MOLS is inoperable (figure 3). The MOVLAS source light is operated by the LSO using a special controller. The source lights are 23 lights arranged in two closely spaced vertical rows. The six lowest lights are red and the other 17 are yellow. Three lights at adjacent heights are operated to form the source lights. As the controller handle is moved upward, the source lights are switched on progressively towards the top in clusters of three. This gives an approaching pilot the signal to increase his elevation as directed by the LSO. The LSO therefore guides the pilot by signaling to raise or lower his altitude to achieve the proper glideslope. The MOVLAS is provided with 10 green datum lights, 8 red wave-off lights, and 2 green cut lights.

c. Improved Fresnel Lens Optical Landing System (IFLOLS). The land-based Improved Fresnel Lens Optical Landing System MK 14 MOD 0 (IFLOLS) is the replacement system for the FLOLS MK 8 MOD 0 and MK 8 MOD 1 land-based systems. The IFLOLS consists of 12 cells which provide greater sensitivity and resolution to the light in the cell seen by the pilot ("meatball") than the FLOLS system. The position of the "meatball" relative to the datum lights indicates to the pilot where he is relative to proper glideslope. The IFLOLS system also has greater acquisition distance than the FLOLS system. The land-based IFLOLS is also trailer-mounted for easy portability.

8. INSTALLATIONS.

9. INSTALLATION REQUIREMENTS.

The OLA equipment is portable for transporting from one prepared site to another. For details on installing the site refer to ~~NAVFAC P-272~~**UFC 3-535-02**. The instructions on assembling and positioning the equipment are given in the Technical Manual for the particular type and model as referred to in EQUIPMENT of this WP. General design and site installations requirements are discussed below.

NOTE: Any new OLA pads installed at an FCLP shall be made to accommodate an IFOLS configuration. Pad size 11 feet x 17 feet, distance from runway edge is 15 feet, pad elevation same as FCLP centerline. See NAVAIR 51-40ABA-24 for complete details.

10. LOCATIONS.

The OLA site shall be located on the left hand side of the runway as viewed by the approaching pilots. If the OLA is associated with a simulated carrier deck installation, the face of the lens cells or mirror shall be located 430 feet forward of the ramp athwartship lights. If the OLA is an independent installation for a three degree glideslope, the preferred location of the face of the lens cells or mirror is 750 ±10 feet forward of the runway threshold but may be influenced by the following factors:

a. The glide path angle for the primary electronic approach system.

b. Special threshold crossing height requirements.

c. Special ground point intercept for the runway or instrument approach system.

d. Approach zone obstruction clearance requirements.

e. Intersecting runways or taxiways.

The mounting pad shall be located so that the centerline of the lens cells or mirror is not less than 115 feet from the runway centerline and not less than 10 feet from the runway edge. The height of the mounting pad ~~should~~ **shall** be the same as the runway ~~centerline~~**edge**. The mounting pad should be not less than 15 feet square, level, and have a permanent survey marker for correct location and alignment of the centerline of the FLOLS cells or MOLS mirror. At 150 feet toward the runway threshold from the position for the face of the cells on a line parallel to the runway centerline, a survey monument for the siting mirror station for the FLOLS shall be installed. This monument or pad shall have a permanent survey marker for correct location of this equipment and should be at the same elevation as the mounting pad.

NOTE: Contact NAWCADLKE for data on locating and alignment of the FLOLS for wide-body aircraft operations.

11. EQUIPMENT.

12. The OLA equipment is Government Furnished Equipment (GFE) and is obtained from the Naval Depot. It shall be one of the following;

a. FLOLS. Two models of FLOLS may be used (figure 1).

(1) FLOLS MK 8 MOD 0. For a description of this equipment refer to NAVAIR 51-40ABA-14.

(2) FLOLS MK 8 MOD 1. For a description of this equipment refer to NAVAIR 51-40ABA-15.

(3) IFLOLS MK 14 MOD 0. For a description of this equipment refer to NAVAIR 51-40ABA-24.

b. MOVLAS MK 2 MOD 2. One model of MOVLAS is used (figure 3). For a description of this equipment refer to NAVAIR 51-40ACA-3.

13. PHOTOMETRIC REQUIREMENTS.

The lamps and light sources are specified for this service and shall be as required. The intensity settings may be several steps or continuously variable. The colors of the lights shall be aviation yellow for source lights, aviation green for datum and cut lights, and aviation red for wave-off lights in accordance with ICAO, Annex 14, Vol. 1, App. 1.

DRAFT

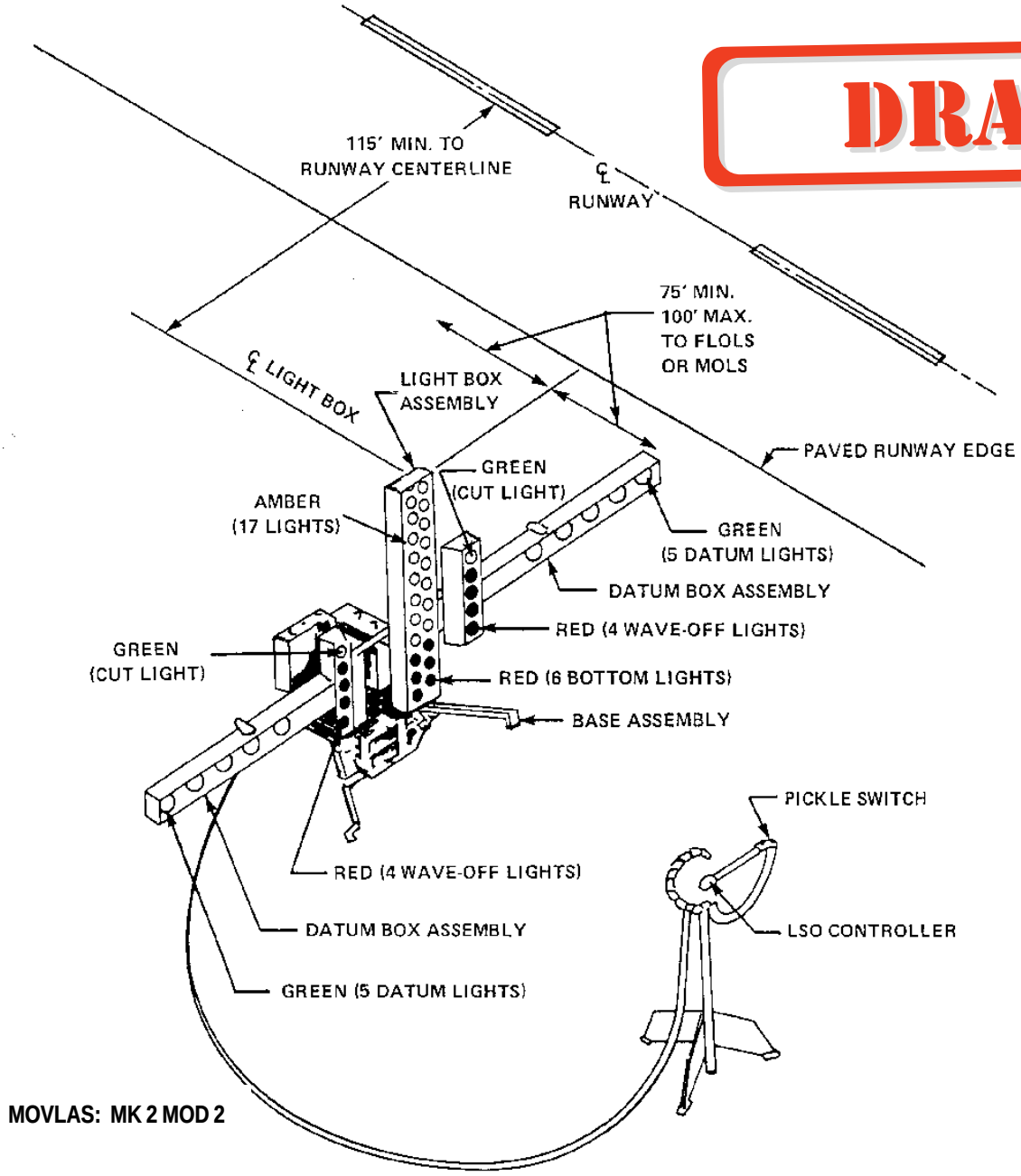

Figure 2. A typical manually operated visual landing aid system (MOVLAS)

14. POWER AND CONTROLS.

15. POWER.

The power for the OLA may be from the airfield lighting vault or from a portable engine-generator set. Emergency power and automatic power transfer should be provided if available (WP009 01). The power requirements are as follows:

a. FLOLS. 20 KVA, 120/240V single-phase 4-wire. The current rating should be not less than 50 amperes, 60Hz.

b. MOVLAS. 3KVA, 120V single-phase.

c. IFLOLS. 4.8 KVA, 120/240V three phase 5-wire. The current rating should be not less than 40 amperes, 60 Hz.

16. CONTROLS.

Local operating procedures shall prescribe the intensity setting for the various light conditions. The wave-off lights on these systems when FCLPs are conducted shall be operated by the LSO.

DRAFT

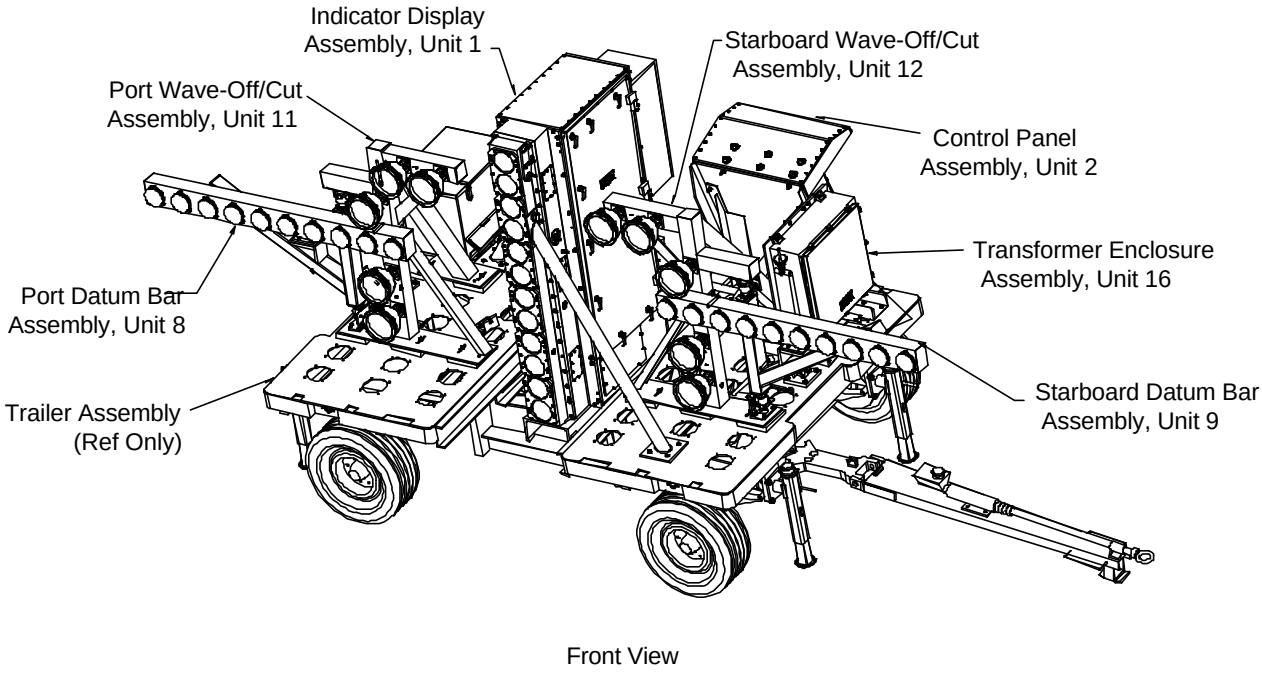

Figure 3. **Improved Fresnel Optical Landing System (IFLOLS)**

TECHNICAL MANUAL

MEDIUM-INTENSITY APPROACH LIGHT SYSTEM WITH RUNWAY ALIGNMENT INDICATOR LIGHTS (MALSR)

SHOREBASED AIRFIELDS

Reference Material

Introduction 002 00
~~Definitive Designs for Naval Shorebased Facilities ..... NAVFAC P-272~~
Approach Visual Aids 003 00
Approach Lights, Category I - ALSF-1 ..... 003 06
Approach Lights, Category II and Category III - ALSF-2 ..... 003 07
Short Approach Light System (SALS) 003 08
Obstruction Lighting 003 10
Visual Approach Slope Indicator (VASI) Systems 003 11
Precision Approach Path Indicator (PAPI) Systems 003 12
Optical Landing Aids (OLA) 003 13
Runway Markings 004 01
Runway Threshold Lights 004 02
Displaced Threshold Lights 004 03
High-Intensity Runway Edge Lights (HIRL) 004 05
Auxiliary Power and Power Transfer Equipment 009 01
Special Power Supplies 009 04
Airfield Lighting Control Panels 009 05
Design Drawings for Visual Air Navigation Facilities ..... UFC 3-535-02
~~Airfield Lighting ..... MIL-HDBK-1023/1~~
Medium Intensity Approach Lighting System (MALSR) FAA-E-2325
Sequence Flashing Lights System, Elevated With Dimming and Monitoring FAA-E-2628
Low-Impact-Resistant Approach Light Support FAA-E-2702
Aeronautical Ground Light and Surface Marking Colors ..... ICAO, Annex 14, Vol. 1, App. 1
Lightweight Approach Light Structure ..... FAA AC 150/5345-45
Specification for Runway and Taxiway Light Fixtures ..... FAA AC 150/5345-46
Specification for Discharge-Type Flashing Light Equipment ..... FAA AC 150/5345-51

Alphabetical Index

Subject **Page No.**

Access For Servicing. 7
Aiming Criteria. 8
Associated Facilities. 3
Barrette 3
Centerline Light Barrettes 3
Controls 11
Description 3
Elevation-Setting Angles for MALSR Elevated Unidirectional Lights 8
Equipment 8
Existing Installations 3

Fixtures And Components 8
Frangible Supports 8
General Information. 3
Installation Requirements 7
Installations 7
Intensity Control 10
Introduction. 2
Justification Requirements. 2
Light Location Identification 7
Light Planes 7
Light Supports 10
Locations. 8
Low-Impact-Resistant Supports 8
Monitoring. 11
Mounting The Lights 8
Obstruction Clearances 3
Obstruction Lights 7
1000-Foot Crossbar 3
Photometric Requirements. 10
Power. 11
Power And Controls 11
Purpose. 2
Runway Alignment Indicator Lights (RAIL) 3
Schedule Of Lighting Equipment For MALSR 5
Semifrangible Supports 8
Sequence Flashing Lights 3
Station Location 7
System Description. 3
Threshold Lights 3
Tolerances 7

DRAFT

Record of Applicable Technical Directives

None

1. INTRODUCTION.

2. PURPOSE.

This Work Package (WP) contains the requirements for the Medium-intensity Approach Lights Systems with RAIL (MALSR). RAIL is Runway Alignment Indicator Lights. The MALSR may be installed where there is a need for a medium-intensity approach light system. The MALSR is ~~not~~ intended to be used for precision-approach instrument operations**, CAT I conditions**. ~~It may be used for Visual Flight Rules (VFR) and non-precision Instrument Flight Rules (IFR) operations only (WP002 00 and WP003 00). It should not be installed on a runway approach equipped with an electronic precision approach aid.~~ If the approach is planned for upgrading the visual aids to an Approach Light, ~~Category I (ALSF-1) (WP003 06), Approach Lights,~~ Category II (ALSF-2) (WP003 07), or a Short Approach Light System (SALS) (WP003 08), a MALSR should not be installed because it cannot be converted to the high-intensity type systems. The MALSR provides visual approach area identification, centerline alignment, and roll reference for aircraft making approaches for landings during day or night operations. Approval of plans or requests for deviations shall use the procedures as directed in WP002 00.

3. **JUSTIFICATION REQUIREMENTS.**

Any runway that is equipped with a precision electronic approach aid such as an Instrument Landing System (ILS), Microwave Landing System (MLS), or Precision Approach Radar (PAR) should qualify for a MALSR. The exceptions are approaches with an ALSF-2 for Category II conditions (WP003 07) or if it is not feasible to install

an ALSF-2. Criteria to be considered for obtaining approval for an ALSF-1 include:

a. **Mission requirements for operations in Category I conditions.**

b. **The frequency of occurrence of IFR conditions.**

c. **Terrain features in the approach areas that do no provide adequate visual guidance or produce misleading or deceptive cues to the pilots.**

d. **Fixed objects or hazards near the approach path or runway end that could endanger aircraft deviating from the approach or undershooting the runway.**

4. **ASSOCIATED FACILITIES.**

In addition to the ILS, MLS, or PAR electronic aids, other airfield facilities required for use with the MALSR for operations in Category I conditions should include the following:

a. **The runway should be paved and not less than 150 feet wide. The runway length shall not be less than 6000 feet, but shorter runway lengths may be approved for special operating conditions.**

b. **The runway should be equipped with the following:**

(1) **Precision approach runway markings (WP004 01),**

(2) **High-intensity runway edge lights (HIRL) (WP004 05),**

(3) **High-intensity threshold lights (WP004 02),**

(4) **Runway end lights (WP004 04).**

c. **The approach should have a paved or stabilized end zone area extending 1000 feet into the approach area and not less than the width of the runway. The first 300 feet of this paved or stabilized area should have the same slope as the first 1000 feet of the runway. The remainder of the paved or stabilized area may have a slope of not more than ±1.5 percent.**

d. **The runway should have an RVR system.**

e. **Air traffic control should be provided during normal operating hours. The runway may also be equipped with a PAPI system.**

~~3.JUSTIFICATION REQUIREMENTS.~~

~~A MALSR may be approved for installation on approaches needing improved visual guidance but will not be provided with precision approach electronic or visual aids. Criteria which may be considered for obtaining approval for installing a MALSR may include:~~

~~a.Obstacles or hazards near the approach path or runway that could endanger aircraft deviating from the approach course or undershooting the runway,~~

~~b.Terrain features in the approach area that produce misleading or deceptive visual cues to the pilots,~~

~~c.Inadequate visual cues in the approach area (over water or terrain without prominent visual features) requiring better visual guidance for correcting aircraft misalignment during approaches,~~

~~d.A high percentage of the landings use this secondary runway approach.~~

~~These requirements for the MALSR are for new installations or upgrading of existing medium-intensity approach lighting systems.~~

~~4.ASSOCIATED FACILITIES.~~

~~The approach system may be provided with nonprecision electronic approach aids and the runway shall be provided with the following visual aids:~~

~~a.Nonprecision instrument or Precision approach instrument runway markings (WP004 01),~~

~~b.High intensity Runway edge Lights (HIRL) (WP004 05),~~

~~c.Threshold lights (WP004 02) or displaced threshold lights (WP004 03).~~

~~The runway may also be equipped with a Precision Approach Path Indicator (PAPI) (WP003 12), Visual Approach Slope Indicator (VASI) (WP003 11), or an Optical Landing System (OLS) (WP003 13).~~

5. GENERAL INFORMATION.

6. SYSTEM DESCRIPTION.

The MALSR is a system of light bars, barrettes, and Sequence Flashing Lights (SFL) in the approach zone immediately ahead of the runway threshold. The preferred length of a MALSR is 2400 feet but may be shortened to not less than 1380 feet where space or impractical construction problems exist. The plan of the MALSR is shown in figure 1 and the schedule of lighting equipment is given in table 1. The MALSR consists of centerline light barrettes, 1000-foot crossbar,

and the RAIL or sequence flashing lights. In the MALSR, a barrette is three or more lights closely spaced in a transverse line for which the length shall not exceed 15 feet and the center-to-center spacing of the lights shall not exceed 5 feet.

a. Centerline Light Barrettes. The centerline lights consist of seven 5-light barrettes of steady-burning, unidirectional, white, elevated lights. For runways with displaced thresholds or paved overruns, the centerline lights on the runway and overrun shall be semiflush type lights.

b. 1000-Foot Crossbar. The crossbar is 1000 feet from the runway threshold and consists of the centerline barrette and a 5-light barrette on each side of the centerline. All the lights of the crossbar are steady-burning, unidirectional, white, elevated lights.

c. The RAIL. The RAIL consists of five single Sequence Flashing Lights (SFL) on the runway centerline in the approach area ahead of the centerline barrette lights. These lights are capacitance-discharge, unidirectional, white, elevated lights which are flashed in sequence from the approach end towards the runway thresholds. Preferably, the SFL shall be located between 1600 feet and 2400 feet from the runway threshold. If the length of the MALSR is less than 2380 feet, for each SFL deleted at the beginning of the RAIL a SFL may be placed progressively at a centerline barrette until the 1000-foot crossbar is reached. If the total length of the MALSR is less than 1980 feet reduce the number of SFL used.

NOTE

Do not use less than three SFL which may be located at the three outer centerline barrettes.

d. Threshold Lights. The MALSR does not require special threshold lights. The runway threshold lights provide adequate lights for marking the threshold.

7. OBSTRUCTION CLEARANCES.

The following restrictions apply for a MALSR installation:

a. No object will be permitted to obstruct the visibility of any approach light from the viewing window. The viewing window is a rectangular area 100 feet above and below and 250 feet left and right of the ideal glide path at 4500 feet before the runway threshold (figure 2).

DRAFT

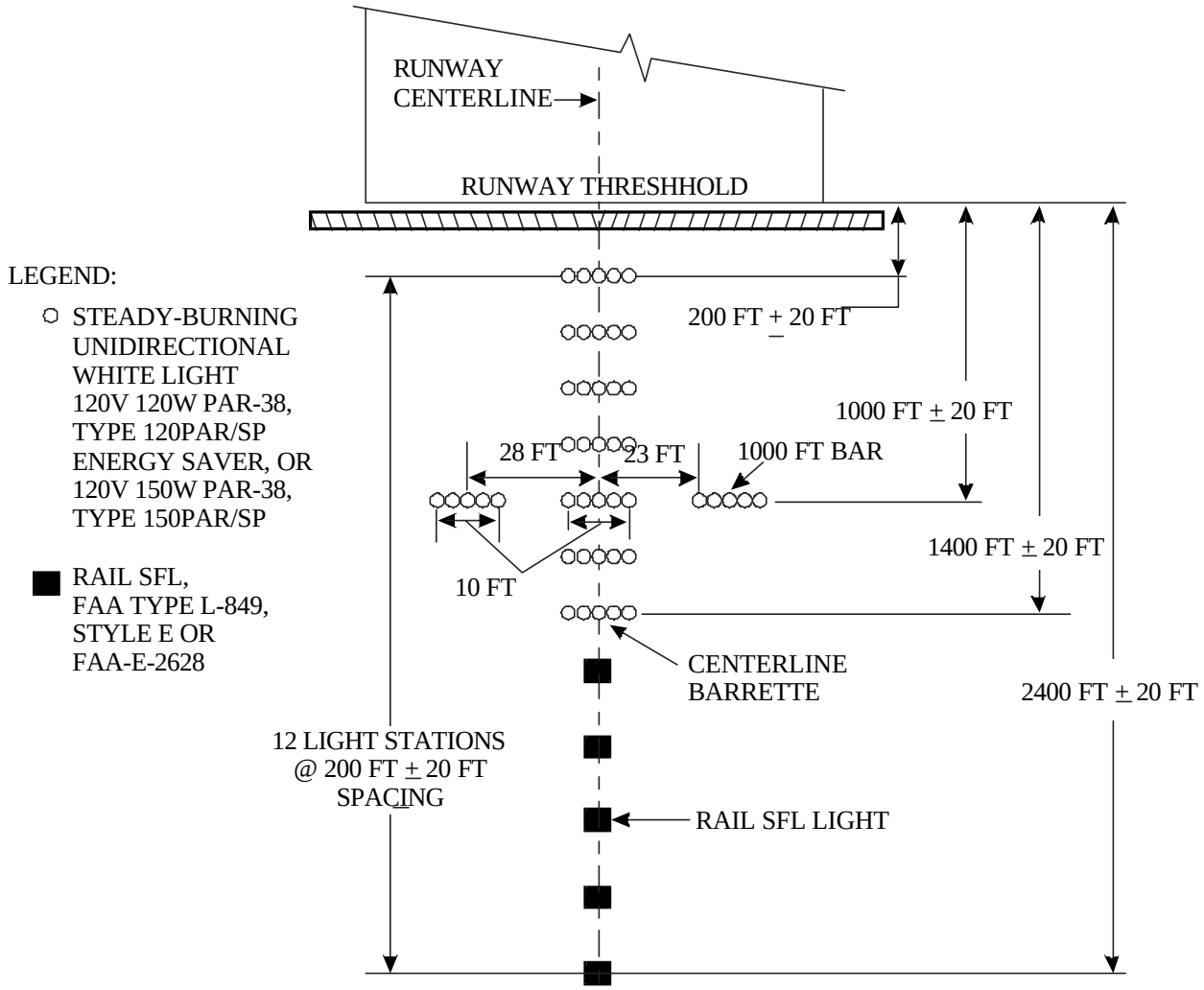

Figure 1. Typical configuration for MALSR system

TABLE 1. SCHEDULE OF LIGHTING EQUIPMENT FOR MALSR

Purpose and Type of Fixture	Lamp Rating and Type	Power Supply	
		Rating	Type
LIGHTING SYSTEMS,			
Incandescent, 45 lights FAA-E-2325	120V 150W PAR-38, 150PAR/SP or 120V 120W PAR-38 120PAR/SP, energy saving	One, 10KVA, 120/240V, 3-wire, 3-step intensity	Type as determined by manufacturer.
SFL, 5 lights, FAA-E-2628	Type as determined by manufacturer.	Master control unit	Type as determined by manufacturer.
CENTERLINE LIGHTS, steady-burning, white, (35), (7 barrettes).			
Lampholder PAR-38, outdoors, type as required by manufacturer	120V 120W PAR-38, 120PAR/SP Energy-saving type or 120V 150W PAR-38 150 PAR/SP	One, 7.5 or 10KVA, 120/240V 3-wire 3-step intensity	Type as determined by manufacturer.
Light, semiflush, displaced threshold, FAA AC 150/5345-46 type L-850B	200W 6.6A, as determined by manufacturer	Transformer 240/30V, or 120/30V, step-down, commercial.	
1000-FOOT CROSSBAR, steady-burning, white, 10 (2 barrettes).			
Lampholder PAR-38, outdoors, type as required by manufacturer	120V 120W PAR-38, 120PAR/SP Energy-saving type or 120V 150W PAR-38, 150 PAR/SP	(Included with centerline lights.)	
RAIL, centerline, sequence flashing (SFL), white, (5) is standard.			
SFL light: FAA AC 150/5345-51, type L-849, style E	As determined by manufacturer.	120V, 3-step intensity	Type as determined by manufacturer.
SUPPORTS.			
Up to 6 feet. - Frangible couplings with 2-inch conduit. 6 to 40 feet. - Low-impact-resistant supports for each barrette or SFL, FAA-E-2702. over 40 feet. - Semifrangible supports for each barrette or SFL, FAA-E-2702.			

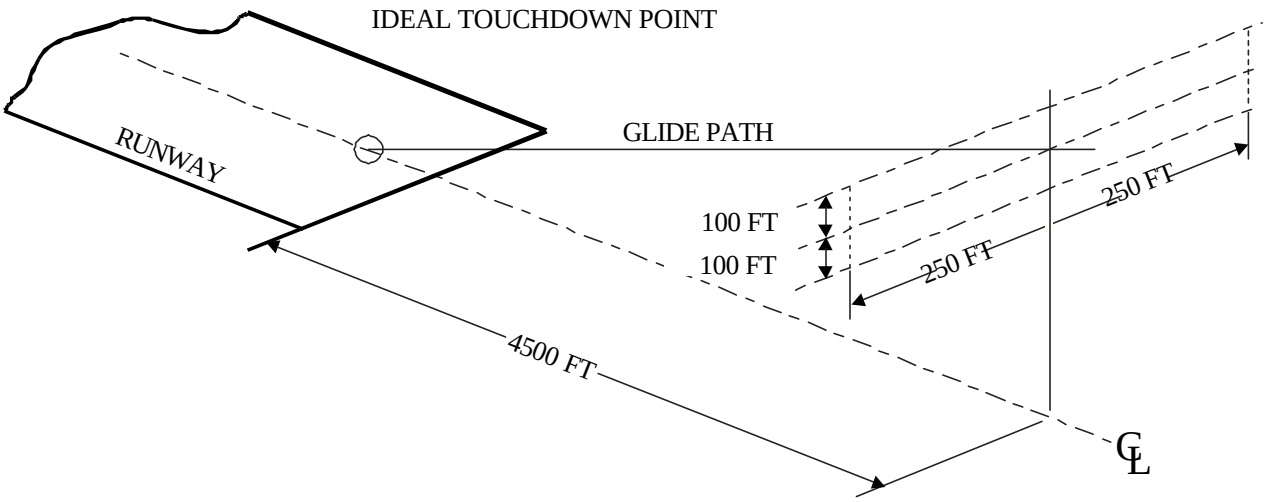

NOTE: OBSTRUCTIONS SHOULD BE CLEARED SO THAT ALL LIGHTS OF THE APPROACH PATH WILL BE VISIBLE FROM ANY POINT IN A 200 FT X 500 FT RECTANGLE, CENTERED ON THE GLIDE PATH, 4500 FT FROM THE THRESHOLD.

Figure 2. Viewing window for approach lights

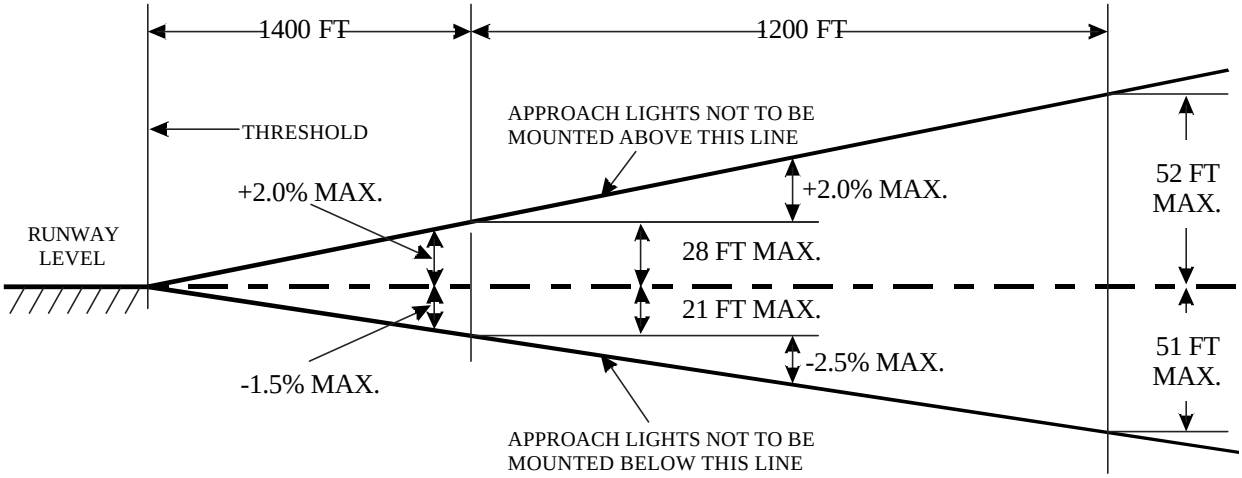

NOTE: THE BOUNDARIES OF THE LIGHT PLANES ARE THE RUNWAY THRESHOLD, 200 FT AHEAD OF THE END LIGHT STATION, AND 200 FT EACH SIDE OF CENTERLINE.

Figure 3. Light plane limits for elevations MALSR of approach lights

a. Light plane or planes (figure 3). The approach light plane(s) is an area 400 feet wide centered on the extended runway centerline which begins at the runway threshold and extends 200 feet beyond the outermost light in which the approach light centers are located. All lines in the planes perpendicular to the runway centerline are horizontal. Ideally all the lights will be installed in a single horizontal plane at the same elevation as the runway threshold without any penetrations by fixed solid objects. Where deviations are necessary for terrain or objects which cannot be removed, the sections starting from the first approach light station from the threshold shall have minimum slope which shall not exceed +2.0 percent (upward) or -1.0 percent (downward) for the steady-burning barrette lights. For the RAIL section, the slope of the light plane(s) shall not exceed +2.0 percent of -2.5 percent. Any sloping or horizontal plane shall contain not less than three light stations.

~~d.~~**b.** No objects, except elevated lights of the MALSR in the end zone, should be permitted to extend above the light planes within the boundaries. All railroads are considered as objects which extend 23 feet above the rails. Interstate highways are considered as objects 17 feet above the highest point on the road surface. Other highways, public roads, and parking areas are considered as objects which extend 15 feet above the road surface. Private or military roads are considered as objects 10 feet or higher except for airport service roads where all vehicular traffic is controlled by the airport control tower or have signs requiring all vehicles to stop and visually check for aircraft before proceeding and prohibiting parking or stopping between the signs.

c. Every effort must be made to remove or relocate objects which penetrate the light plane. For objects which cannot be moved, the height must be kept to a minimum and shall be located as far from the threshold as possible.

d. For objects which are not feasible to remove, lower, or relocate and cannot be cleared by the positive slope, permission may be granted (WP002 00) to exceed the two percent slope for the light plane.

e. Obstruction lights (WP003 10) are required on all objects protruding through the light plane except frangible-mounted elevated lights of the approach light system.

8. LIGHT LOCATION IDENTIFICATION (STATION LOCATION).

Positions of the lights may be identified by station or by distance. Stations are the longitudinal distances in feet into the approach zone from the runway threshold. The runway threshold is station 0+00. An item located 820 feet from the threshold would be at station 8+20. This item may be located on or off the centerline. Lateral, vertical, and some longitudinal distances are given in feet and inches.

9. ACCESS FOR SERVICING.

Provisions for servicing the MALSR system should be provided by such facilities as access roads, footpaths, and catwalks.

10. INSTALLATIONS.

11. INSTALLATION REQUIREMENTS.

For details on design and installations of the MALSR refer to ~~MIL-HDBK-1023/1 and NAVFAC P-272~~**UFC 3-535-02**. General requirements for installation are given in this WP. All elevated lights shall be mounted on frangible couplings or if more than 6 feet above the surface on low-impact-resistant supports.

12. TOLERANCES.

The approved tolerances for positioning steady-burning MALSR lights are as follows:

a. Lateral tolerance of a bar is ±6 inches.

b. Distance between individual light centers in a barrette is ±2 inches.

c. Height for light centers up to 6 feet is ±2 inches.

d. Height for light centers between 6 and 40 feet is ±4 inches.

e. Height for light centers over 40 feet is ±6 inches.

f. Tolerance for vertical aiming of light units is ±1.0 degree.

g. Tolerance for horizontal aiming of light unit is ±5 degrees.

h. Longitudinal deviation for light bars or single SFL from a designated station is ±20 feet, except light stations may be displaced 100 feet to avoid omitting a light station where obstructions cannot be removed or cleared by acceptable clearance planes. Where a light station must be located more than 20 feet from the usual station position, the nearby light

TABLE 2. ELEVATION-SETTING ANGLES FOR MALSR ELEVATED UNIDIRECTIONAL LIGHTS

A. Steady-burning lights

Station	Setting Angle above Horizontal (Degrees)		Station	Setting Angle above Horizontal (Degrees)	
	Preferred	Permitted		Preferred	Permitted
14+00	3.7	3.5	6+00	3.4	3.5
12+00	3.6	3.5	4+00	3.3	3.5
10+00	3.5	3.5	2+00	3.2	3.0
8+00	3.4	3.5			

B. Elevated SFL are all aimed 6 degrees above horizontal.

station positions may be located to provide more uniform spacing between lights.

13. AIMING CRITERIA.

The beams of all approach lights shall be aimed into the approach and away from the runway threshold with the axes of the beams parallel in azimuth to the extended runway centerline. The vertical aiming of the elevated lights shall be in accordance with table 2. The semiflush lights have fixed elevation angles for the beams. These lights only require that the light base flange be level.

14. LOCATIONS.

The configuration for the MALSR system shall be as shown in figure 1. The centerline barrettes and the single SFL shall be located at 200-foot intervals from station 2+00 to the end of the system. The center of the barrette shall be on the runway centerline with the axis of the barrette horizontal and perpendicular to the centerline. If a barrette or light is displaced more than 20 feet longitudinally to avoid a major obstruction, the spacing of the lights at adjacent stations may be adjusted to obtain more uniform spacing. The spacing between lights centers in a barrette shall be equal and nominally 2.5 feet. The wing barrettes for the 1000-foot crossbar (station 10+00) shall be the same as for the centerline barrettes except the center of the barrette shall be 28 ±2 feet from the runway centerline. The axes of these barrettes shall be in line with the centerline barrette at this station.

15. MOUNTING THE LIGHTS.

Semiflush light should be used only in displaced threshold areas or paved overruns. These semiflush lights shall be mounted on steel light bases set in a concrete foundation. These lights may project not more than one inch above the paved surface. The elevated lights are mounted at the correct height on frangible, low-impact-resistant, or semifrangible supports. Frangible supports are used for heights of 6 feet or less. The support consists of a frangible coupling and sections of 2-inch diameter conduit for each light. The frangible coupling may be mounted on a steel light base or 2-inch diameter conduit elbows set in a concrete foundation. For heights more than 6 feet, the barrettes or individual SFL shall be placed on low-impact resistant or semifrangible supports.

16. EQUIPMENT.

17. FIXTURES AND COMPONENTS.

The lighting equipment for the MALSR shall be as shown in table 1. Typical elevated steady-burning lights for the centerline lights and 1000-foot bar lights are shown in figure 4.A. A typical semiflush light for use as centerline lights in displaced threshold areas is shown in figure 4.B. A special power unit or distribution transformer with appropriate intensity settings shall be used to provide power to these lights. A typical SFL is shown in figure 5. Each SFL shall consist of a flasher head and a power supply unit. The flasher head and power supply unit may be combined to install as a single light unit, or the flasher head may be

LAMPHOLDER: PAR-38, OUTDOORS, COMMERCIAL TYPE AS DETERMINED BY THE MANUFACTURER.

LAMP: 120V 120W PAR-38 TYPE 120PAR/SP ENERGY SAVING, OR 120V 150W PAR-38 TYPE 150PAR/SP.

POWER UNIT: (NOT SHOWN) DISTRIBUTION VOLTAGE TO 120V RATED, 3-INTENSITY SETTINGS AS REQUIRED BY MANUFACTURER (ONE UNIT FOR SYSTEM)

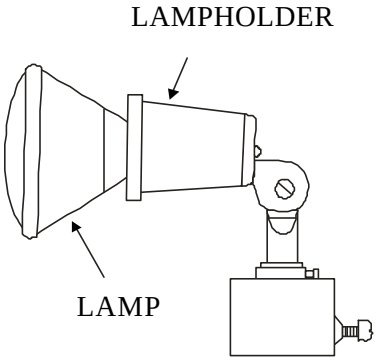

A. ELEVATED BARRETTE LIGHT

LIGHT: FAA AC 150/5345-46 TYPE L-850B

BASE: FAA AC 150/5345-42 TYPE L-868 SIZE B.

OR FOR INSET LIGHTS FAA AC 150/5345-46 TYPE L-850BS SPECIAL SHALLOW BASE.

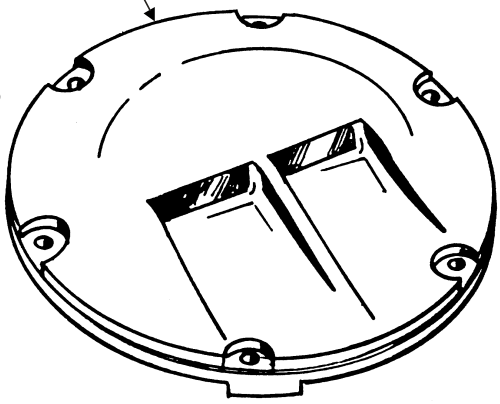

LAMP: 200W, 6.6A TYPE AS DETERMINED BY MANUFACTURER

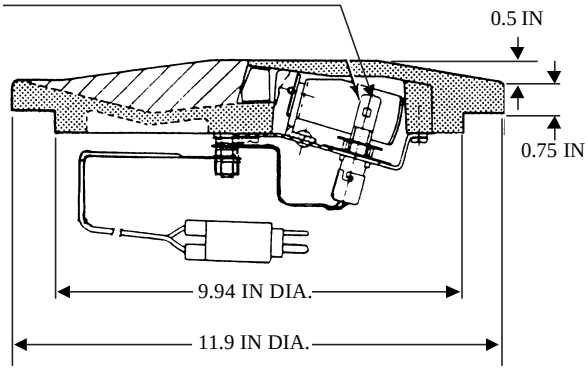

DIMENSIONS ARE FOR REFERENCE ONLY

B. SEMIFLUSH BARRETTE LIGHT

NOTE: THE BEAM OF THESE LIGHTS SHALL BE TOED-IN TOWARDS THE RUNWAY CENTERLINE AND WILL REQUIRE RIGHT-HAND AND LEFT-HAND FIXTURES.

Figure 4. Typical centerline barrette lights for MALSR

SFL FIXTURE: UNIDIRECTIONAL 240V, FAA AC 150/5345-51, TYPE L-849, STYLE E, (FLASHER HEAD AND POWER UNIT MAY BE MOUNTED SEPARATELY).

LAMP: AS DETERMINED BY MANUFACTURER.

POWER: 120V OR 240V INPUT, 500VA EACH LIGHT.

MASTER CONTROLLER: (NOT SHOWN)

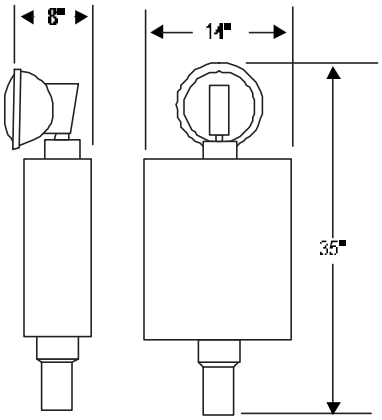

DIMENSIONS ARE FOR REFERENCE ONLY
OUTLINE DIMENSIONS

Figure 5. Typical SFL for MALSR, type FAA L-849E

installed at any distance of not more than 150 feet from the power supply unit. A master control unit shall furnish the power, intensity setting, and triggering signal for all the SFL in the system.

18. LIGHT SUPPORTS.

The type of supports for the MALSR lights depends on the height of the light or barrette above the surface as follows:

a. Elevated light heights 6 feet or less use frangible supports. Refer to MOUNTING THE LIGHT this WP.

b. Light heights between 6 feet and 40 feet use low-impact-resistant supports. The individual SFL or 5-light barrettes shall be installed on low-impact-resistant supports of the correct height. These supports may be non-metallic, FAA-E-2702 supports or triangular, antenna support type, FAA AC 150/5345-45.

c. Light heights more than 40 feet should use semifrangible supports. Individual SFL or 5-light barrettes shall have the top 20 feet of the support of the low-impact-resistant type installed on a rigid support of the correct height.

19. PHOTOMETRIC REQUIREMENTS.

See the appropriate FAA AC for the specific fixture photometrics. The color of the steady-burning lights shall be aviation white for the centerline and 1000-foot crossbar lights as required by ICAO, Annex 14, Vol. 1, App. 1. The color of SFL may be aviation white or bluish-white similar to xenon gas discharge lights. The intensity steps based on rated intensity shall be 100 percent for HIGH setting, 20 percent for MEDIUM setting, and 4 percent for LOW setting for the steady-burning centerline and 1000-foot crossbar lights and 100 percent for HIGH setting, 10 percent for MEDIUM setting, and 2 percent for LOW setting for the SFL. The SFL shall flash in sequence from the outer end toward the runway threshold at a steady rate between 60 and 120 times per minute. The interval between flashes of adjacent lights shall nominally be 1/30 seconds. The intensity-distribution of the lights shall be as follows:

a. Steady-burning white lights. The peak intensity for the elevated lights at the rated 120 volts shall be not less than 10,000 candelas and the intensity shall be not less than 1000 candelas at any angle up to 15 degrees from the beam axis. For the semiflush lights the peak intensity shall be not less than ~~10,000~~**5,000** candelas with the beamspreads from the beam axis at 2500 candelas not less than ±5 degrees horizontally and ±3.5 degrees vertically and at 500 candelas not less than ±7 degrees horizontally and ±5.5 degrees vertically.

b. SFL. The rated effective intensity shall be not less than 7500 candelas or more than 22,500 candelas for 15 degrees horizontally and 5 degrees vertically from the beam axis.

20. POWER AND CONTROLS.

21. POWER.

The electrical power for the MALSR approach lights shall be as follows:

a. For the centerline and 1000-foot crossbar steady-burning lights, a special power unit shall furnish power to these lights from a multiple circuit rated at 120 volts or 120/240 volts 3-wire. This power unit shall energize the lights at either of the three intensity settings as selected.

b. For the SFL, the power to operate these lights shall be 120 volts multiple circuit furnished by the master control unit (WP009 04) for the RAIL section of the system. The master control unit controls the flashing sequence of the lights and the intensity setting as selected. These lights have individual power supply units which may be combined with or separated from the flasher head.

Emergency power is not essential for the MALSR system, but if emergency power is available, it should be used with the automatic emergency power transfer (WP009 01).

22. CONTROLS.

The MALSR shall be remotely controlled from the airfield lighting control panel (WP009 05) in the control tower. Alternate control from the airfield lighting vault is desirable. A separate control shall provide for switching ON and OFF and for selecting the intensity setting of the centerline lights, the 1000-foot bar lights, and the SFL.

23. MONITORING.

The operation of the MALSR system, including the intensity selection, should be visually observed at least once each day. Automatic monitoring is not required, but it may be used if the equipment installed has this capability.

TECHNICAL MANUAL

RUNWAY VISUAL AIDS

SHOREBASED AIRFIELDS

Reference Material

Introduction 002 00
~~Definitive Designs for Naval Shorebased Facilities ..... NAVFAC P-272~~
Approach Visual Aids 003 00
Runway Markings 004 01
Runway Threshold Lights 004 02
Displaced Threshold Lights and Markings 004 03
Runway End Lights 004 04
High-Intensity Runway Edge Lights (HIRL) 004 05
Runway Centerline Lights (RCL) 004 06
Touchdown Zone Lights (TDZL) 004 07
Runway Exit Lights 004 08
Runway Distance Markers (RDM) 004 09
Arresting Gear Markers and Markings 004 10
Design Drawings for Visual Air Navigation Facilities ..... UFC 3-535-02
~~Airfield Lighting ..... MIL-HDBK-1023/1~~
Terminal Instrument Procedures (TERPS) ..... OPNAV Inst. 3722.16
Marking of Paved Areas on Airports ..... FAA AC 150/5340-1
Standards for Specifying Construction of Airports ..... FAA AC 150/5370-10

Alphabetical Index

Subject **Page No.**

Approach Minimums. 2
Approach Visual Aids Requirements 3
Description Of Runway Visual Aids 3
Existing Installations 2
Flight Rules. 2
General Flight Rules. 2
General Information. 2
IFR Categories 3
Implementation 4
Instrument Flight Rules (IFR). 2
Purpose. 2
Runway Visual Range (RVR). 3
Scope 2
Selection Of Runway Visual Aids 4
Standardization. 2
Visual Flight Rules (VFR) 2

Record of Applicable Technical Directives

None

1. GENERAL INFORMATION.

2. PURPOSE.

Runway visual aids consist of marking and lighting on or near the runway. The purpose of these visual aids is to provide guidance to pilots for safe takeoffs and landings during any operational condition. They shall clearly define the runway surface and its limits and provide directional and distance cues for properly orienting and controlling the aircraft. The information must be easily recognized and used in fair weather and in restricted visibility conditions, day or night, to the minimums authorized for the runway.

3. SCOPE.

The runway visual aids section of this Technical Manual contains the configuration requirements, applications, basic design and installation criteria, and equipment required for the runways of Navy shorebased airfields. Each runway shall have the visual aids which will satisfy the requirements for the operations authorized for that runway. The requirements contained in the individual Work Package(s) (WP) provide guidance for all personnel servicing existing systems or designing complete new installations. Existing installations of similar aids may be used and maintained as installed. Extensions, major modifications, or upgrading of existing installations shall comply with the requirements of the WP for the individual aid.

4. STANDARDIZATION.

The WP for each runway visual aid establishes the requirements to be used for most Navy airfields. By combining the WP for all the runway visual aids required for the mission and special characteristics of the airfield, standardization of runway visual aids for Navy airfields is attained. Standardization of visual aids on a nation wide basis is essential to promote operational safety. When deviation of installations are necessary, these changes shall be authorized in accordance with the approved procedures of WP002 00.

5. FLIGHT RULES.

6. GENERAL.

The types of runway visual aids required for an airfield depends on the flight operations that will be performed and the approach visual aids (WP003 00) that are installed. Flight operations are separated into Visual Flight Rules (VFR) operations and Instrument Flight Rules (IFR) operations. Major airfields usually have both types of operations. The runway visual aids associated with the different flight rules are indicated in table 1.

7. VISUAL FLIGHT RULES (VFR).

Flight operations for which the approach and landing guidance depends mostly on visual contact with the ground may follow VFR. VFR requires good visibility and may apply for day or night flights. Internationally, the conditions for these operations are referred to as Visual Meteorological Conditions (VMC). See WP002 00 for the criteria. The runway visual aids for these operations are basic for any runway.

8. INSTRUMENT FLIGHT RULES (IFR).

Flight operations for which at least part of the navigation depends on electronic guidance must use IFR. IFR involve low ceilings or poor visibility or both whether day or night. Internationally, the conditions for these operations are referred to as Instrument Meteorological Conditions (IMC). See WP002 00 for criteria. As the ceiling becomes lower or the visibility more restricted, the more precise the visual information must be.

9. APPROACH MINIMUMS.

To be permitted to make approaches to a given runway the weather conditions must be at or above specified levels called approach minimums. These minimums depend on several factors including the following:

a. Type of aircraft.

b. Minimum visibility or Runway Visual Range (RVR).

c. Minimum height of ceiling.

d. Minimum Descent Altitude (MDA) or Decision Height (DH).

e. Type of approach and runway visual aids.

f. Type of approach.

For methods to determine approach minimums refer to OPNAV Inst. 3722.16.

10. RUNWAY VISUAL RANGE (RVR).

Runway visual range is a system of measuring the visibility along the runway. It is an instrumentally derived value that represents the horizontal distance a pilot will see down the runway from the approach end. It is based on the sighting of either High Intensity Runway edge Lights (HIRL) or the visual contrast of other targets, whichever yields the greater visual range.

11. IFR CATEGORIES.

To permit flight operations at different approach minimums IFR operations have been divided into categories which are defined in WP002 00.

12. DESCRIPTION OF RUNWAY VISUAL AIDS.

13. The runway visual aids consist of markings and lighting installed on or near the runway. The runway lights include the basic edge lights, the low-visibility runway lights, and the supplemental runway lights. The basic runway lights define the limits of the runway surface. These are the edge lights, the threshold lights, and the runway end lights. Some runways may have displaced threshold lights and markings. The low-visibility runway lights are the centerline and touchdown zone lights. The supplemental runway lights may be runway exit lights, runway distance markers, and arresting gear markers. The configuration of the markings differs for the class of the runway. The marking and types of light may be different for runway on the same air field.

14. SELECTION OF RUNWAY VISUAL AIDS.

15. The types of runway visual aids required depend on the mission and the approach minimums which may be necessary. Table 1 is a guide for determining the aids to be provided. The design requirements are found in the WP for each type of approach aid. Installation details are given in ~~MIL-HDBK-1023/1 and NAVFAC P-272~~**UFC 3-535-02** for runway lights and signs and FAA AC 150/5340-1 and AC 150/5370-10 for runway markings.

16. IMPLEMENTATION.

The WP and requirements of this section of the Manual are not intended to direct or request implementation but are to establish uniformity when implementation is undertaken.

TABLE 1. APPROACH VISUAL AIDS REQUIREMENTS

Visual Aids System	Authorized Operations						
		IFR Category					
	VFR	Non-Prec	I	II	IIIA	IIIB	IIIC
Runway Marking (WP004 01)	R	R	R	R	R	R	IN
Runway Threshold Lights (WP004 02)	R	R	R	R	R	R	IN
Displaced Threshold Lights and Markings (WP004 03)	RS	RS	RS	RS	RS	RS	IN
Runway End Lights (WP004 04)	R	R	R	R	R	R	IN
Runway Edge Lights (HIRL) (WP004 05)	R	R	R	R	R	R	IN
Runway Centerline Lights (WP004 06)	NR	C	C	R	R	R	IN
Touchdown Zone Lights (TDZL) (WP004 07)	NR	RS	OPT	R	R	R	IN
Runway Exit Lights (WP004 08)*	RS	RS	RS	RS	RS	RS	IN
Runway Distance Markers (RDM) (WP004 09)	R	R	R	R	R	IN	IN
Arresting Gear Markers (WP004 10)	R	R	R	R	R	IN	IN

C - Recommended
R - Required (These visual aids are required for operating in the IFR Category, but other factors may negate approval for installation. See Justification for Installation, WP002 00.)
RS - Required under special conditions. *An example: Only if highspeed exit is installed.
OPT - Option as recommended by air station commander and approved by NAVAIR.
IN - Installation necessary.
NR - Not Required.

TECHNICAL MANUAL

RUNWAY MARKINGS

SHOREBASED AIRFIELDS

Reference Material

Paint, Airfield Marking, Solvent Base ..... FED TT-P-85
Paint, Black ..... FED TT-P-110
Introduction 002 00
Runway Visual Aids 004 00
Displaced Threshold Lights and Markings 004 03
Arresting Gear Markers and Markings 004 10
Taxiway Markings 005 01
Colors FED-STD-595
Simulated Carrier Deck Lights and Markings 006 04
Design Drawings for Visual Air Navigation Facilities ..... UFC 3-535-02
~~Airfield Lighting ..... MIL-HDBK-1023/1~~
Beads (Glass Spheres), Retroreflective ..... FED TT-B-1325
Paint, Airfield Marking, Water Emulsion FED-TT-P-1952
Marking of Paved Areas on Airports ..... FAA AC 150/5340-1
Standards for Specifying Construction of Airports ..... FAA AC 150/5370-10

Alphabetical Index

Subject **Page No.**

Basic Runway Markings. 3
Borders For Markings 8
Centerline Markings 3
Closed Or Nonoperational Runway Markings. 7
Description 2
Direction Markings 3
Existing Installations 2
Fixed Distance Markings ..... 2 and 7
Frost Heaves 10
General Description 2
General Information. 2
Installation Requirements 10
Installations 10
Intersections of Runways ..... 7 and 10
Justification Requirements. 2
Materials. 10
Nonprecision Instrument Runway Markings 3
Overrun Markings. 8
Precedence Of Markings 10
Precision Approach Instrument Runway Markings. 3
Purpose. 2
Related Facilities 2
Restrictions 11

Runway Centerline Markings..... 3
Runway Designation Markings..... 3
Runway Shoulder Markings..... 8
Side Stripes Markings..... 7
Striated Markings..... 10
Supplemental Runway Markings..... 3
Threshold Markings..... 7
Touchdown Zone Markings..... 7

Record of Applicable Technical Directives

None

1. GENERAL INFORMATION.

2. PURPOSE.

This Work Package (WP) contains the requirements for the Runway Markings for paved runways on shorebased airfields. These markings provide visual cues to pilots for runway identification, longitudinal alignment information, touchdown zone, and runway edges for paved runways. These cues assist pilots in operating aircraft during landings, rollouts and takeoffs. These requirements establish uniformity for ease of recognition and use in the interest of safety and efficient aircraft operations. The complexity of the markings vary with the operational class of the runway. The classes of runways for markings are:

a. Basic runways,

b. Nonprecision instrument runways, and

c. Precision-approach instrument runways.

The markings for paved overruns, stabilized runway shoulders, and closed runways are included in this WP. These marking requirements shall be used for all new or resurfaced runways and at any time the existing markings are to be repainted. Existing runway markings may be used until repainting is needed provided they meet the minimum requirements for the runway classification.

3. JUSTIFICATION REQUIREMENTS.

The runway markings are basic visual aids for aircraft landings and takeoffs. All paved runways shall be marked with at least the minimum requirements for the runway.

a. Basic runways are intended for Visual Flight Rules (VFR) operations (WP004 00) only.

b. Nonprecision instrument runways permit Instrument Flight Rules (IFR) operations (WP004 00) of nonprecision approaches and VFR operations only.

c. Precision-approach instrument runways permit IFR operations in Category I or Category II conditions, nonprecision IFR, and VFR operations.

Additional markings of a higher level may be approved for special site or operating conditions (WP002 00).

4. RELATED FACILITIES.

Other markings on the runway may include:

a. Displaced threshold markings (WP004 03),

b. Arresting gear markings (WP004 10),

c. Simulated carrier deck markings (WP006 04), and

d. Taxiway entrance and exit markings (WP005 01).

5. DESCRIPTION.

6. GENERAL.

The runway markings consist of a system of markings identified by the functions which they serve. These markings are similar to those required by the FAA in their requirements in Advisory Circular AC 150/5340-1. The standard elements of runway markings are as follows:

a. Runway designation markings,

b. Centerline markings,

c. Threshold markings,

d. Side stripes markings,

e. Touchdown zone markings, and

f. Fixed distance markings.

7. BASIC RUNWAY MARKINGS.

(See figure 1.a.) The minimum markings for the basic runway class are:

a. Runway designation markings, and

b. Centerline markings.

Threshold markings should be used if the runway requires better identification or if international commercial aircraft use this runway. Side stripes may be added if the runway edges are not easily recognized. Fixed distance markings shall be added for runways 4,000 feet or more in length and used by jet aircraft.

8. NONPRECISION INSTRUMENT RUNWAY MARKINGS.

(See figure 1.b.) The minimum markings for the nonprecision instrument runways are:

a. Runway designation markings,

b. Centerline markings, and

c. Threshold markings.

Touchdown zone markings may be added for runways 5000 feet or more in length. Side stripes may be added if the runway edges are not easily recognized. Refer to SIDE STRIPES MARKINGS this WP. Fixed distance markings shall be added for runways 4,000 feet or more in length and used by jet aircraft.

9. PRECISION APPROACH INSTRUMENT RUNWAY MARKINGS.

(See figure 1.c.) The markings for precision approach instrument runways include all elements for runway markings. Refer to GENERAL DESCRIPTION this WP.

10. SUPPLEMENTAL RUNWAY MARKINGS.

Some runways require supplemental markings to provide information on runways with special features associated with the runway. These supplemental markings are:

a. Displaced threshold markings (WP004 03),

b. Closed or nonoperational runway markings,

c. Arresting gear and barrier markings (WP004 10),

d. Simulated carrier deck markings (WP006 04),

e. Overrun markings,

f. Runway shoulder markings, and

g. Taxiway entrance and exit markings (WP005 01).

11. RUNWAY DESIGNATION MARKINGS.

(See figures 2 and 3.) The runway designation (direction) markings consist of a number indicating the direction of the runway **by its magnetic azimuth** and, in cases of parallel runways, a letter. The designation number shall be the whole number from 1 to 36 to the nearest one-tenth of the azimuth (in degrees) of the runway centerline. The azimuth is measured clockwise from magnetic north as viewed from the approach direction. If the whole number is less than “10”, the designation number shall be preceded by a “0”. Examples; if the centerline magnetic azimuth is 183° the number is “18”; for the opposite approach - azimuth 03° - the number is “36”. If the centerline magnetic azimuth is 87°, the number is “09” and the number for the opposite runway end is “27”. The numbers on opposite ends of the same runway shall be a difference of 18. If the runway is one of two or three parallel runways, a letter is added to the runway designation marking. For two parallel runways, the letters are “L” and “R”. For three parallel runways, the letters are “L”, “C”, and “R”. The letters shall be located between the runway threshold or threshold marking and the number as shown in figure 2. The color of the designation markings shall be retroreflective white. The numbers and letter shall be block type as shown in figure 3. Refer to figure 2 for specific location and dimensions of markings.

12. RUNWAY CENTERLINE MARKINGS.

(See figure 2). The centerline markings shall be centered on the runway centerline. The markings shall consist of a broken line of 100’ (minimum) to 150’ (maximum) long stripes separated by blank spaces of 60 feet minimum and a maximum space of the line length. The first stripe from each end shall be 40 feet from the top of the designation number. The width of the stripes shall be 12 to 18 inches wide for basic runways and a minimum of 36 inches wide for other runways. The color of these markings shall be retroreflective white.

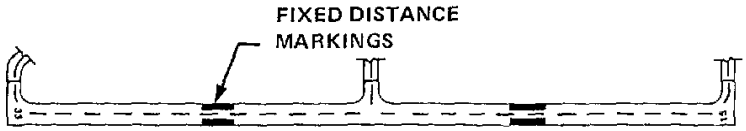

A. BASIC RUNWAY

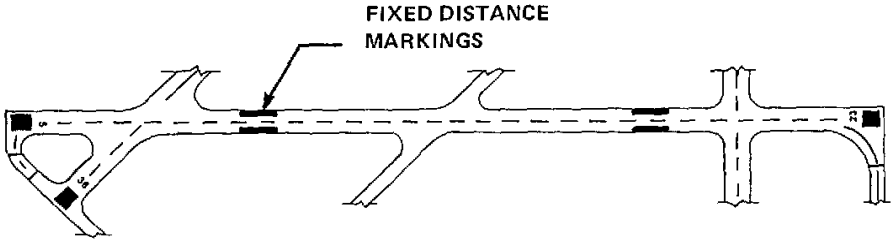

B. NONPRECISION INSTRUMENT RUNWAY

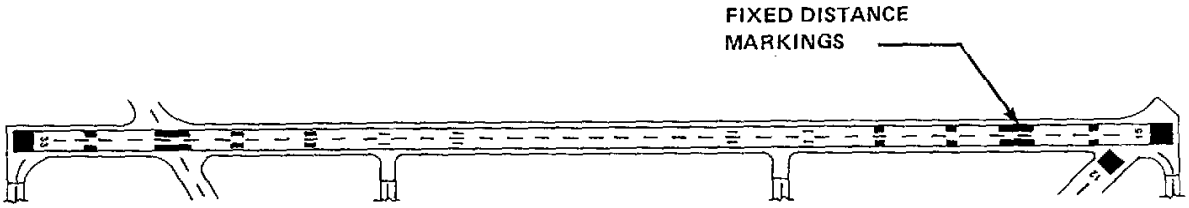

C. PRECISION APPROACH INSTRUMENT RUNWAY

NOTE: COLOR OF MARKINGS SHALL BE RETROREFLECTIVE WHITE.

Figure 1. Typical layout for runway markings by class

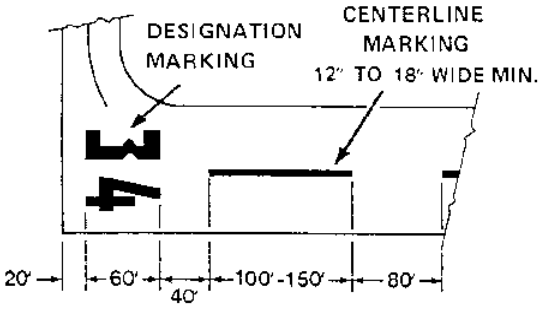

A. BASIC RUNWAY DETAILS

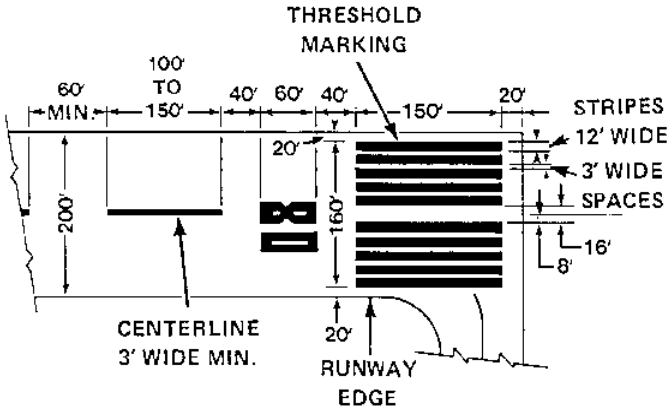

B. NONPRECISION INSTRUMENT RUNWAY DETAILS

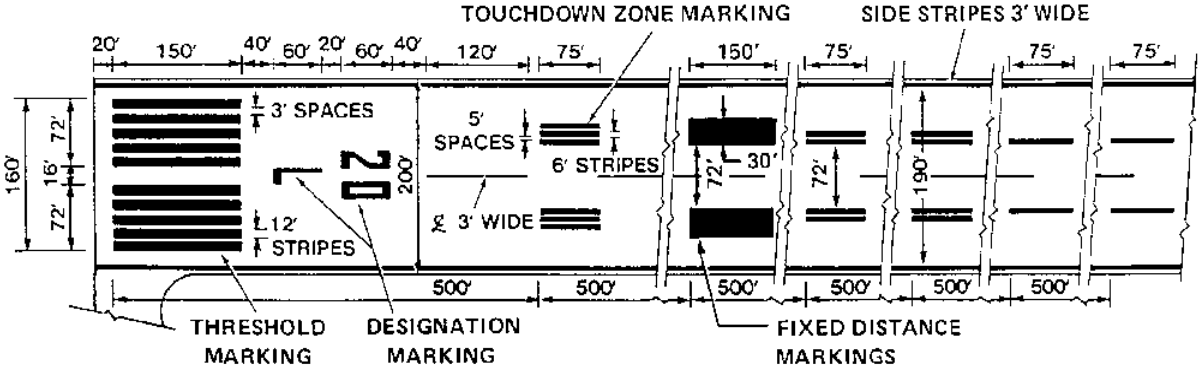

C. PRECISION APPROACH INSTRUMENT RUNWAY DETAILS

Figure 2. Typical details for runway markings

NOTES

1. **THE COLOR OF RUNWAY MARKINGS, EXCEPT FOR RUNWAY EXIT MARKINGS, SHALL BE RETROREFLECTIVE WHITE.**
2. **FOR RUNWAYS WITH SIMULATED CARRIER DECK INSTALLATIONS, THE CARRIER DECK SHALL HAVE PRECEDENCE OVER THE RUNWAY MARKINGS.**
3. **TO INCREASE VISIBILITY ON LIGHT COLORED SURFACES, THE MARKINGS SHOULD BE OUTLINED WITH A BLACK PAINTED BORDER OF 6 INCHES MINIMUM IN WIDTH.**

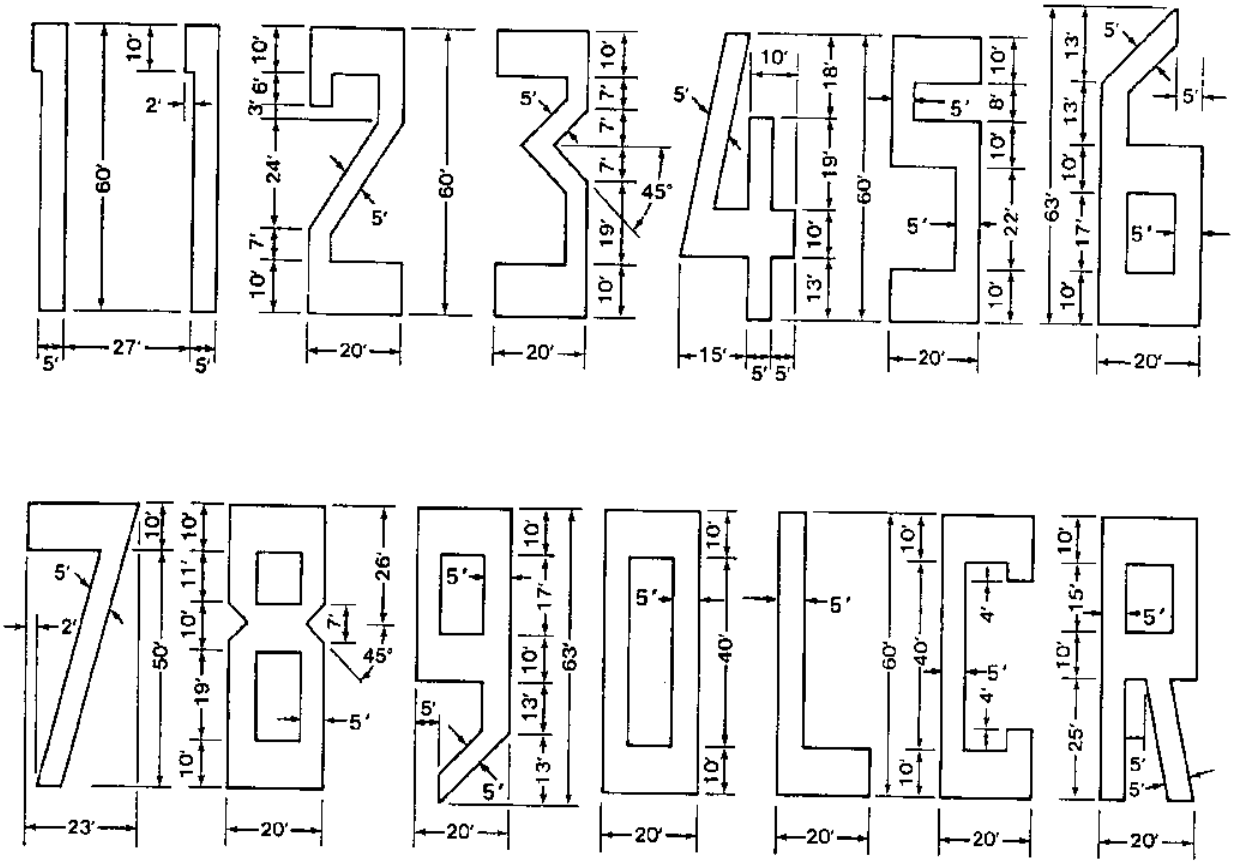

NOTES: 1. THE DIMENSIONS ARE IN FEET.

2. SPACING BETWEEN TWO DIGIT NUMBERS IS 15 FEET, EXCEPT FOR 11.

3. COLOR OF RUNWAY DESIGNATION MARKINGS SHALL BE RETROREFLECTIVE WHITE.

Figure 3. Details for runway designation markings

13. THRESHOLD MARKINGS.

The threshold markings shall consists of ten stripes, five on each side, parallel to and symmetrical about the runway centerline. See figure 2 for location and dimensions for these markings. The color of these markings shall be retroreflective white. If the runway is less than 200 feet wide, the overall width of the threshold markings shall be 20 feet less than the runway width. The width of the stripes and the spaces between stripes shall be reduced proportionally.

14. SIDE STRIPES MARKINGS.

(See figure 2.) The side stripes markings shall be continuous lines near each edge of the runway parallel to the runway centerline. The stripes shall be 3 feet wide. For runways 200 feet or less in width, the outer edge of these stripes shall be at the designated edge of the runway. For runways more than 200 feet wide, the inner edges of the side stripes shall be 200 feet apart and symmetrical about the runway centerline. If the runway has a displaced threshold, the side stripes shall continue through the displaced section. Preferably, the side stripes shall extend to the runway ends but may terminate in line with the beginning of the threshold markings except where the threshold is displaced from the runway end. The color of the side stripes shall be retroreflective white.

15. TOUCHDOWN ZONE MARKINGS.

(See figure 2.) The touchdown zone markings shall consist of groups of three, two, and one rectangular bars symmetrically arranged in pairs about the runway centerline. Each bar shall be 6 feet wide and 75 feet long. The bars within a group shall be spaced 5 feet apart. The second group of bars from the threshold shall be fixed distance markings as single bars 30 feet wide and 150 feet in length. For runways less than 150 feet wide, the width of bars and spaces shall be reduced proportionally. The inner edges of the bars in a pair shall be 72 feet apart. The first pair of bars shall begin 500 feet down the runway from the beginning of the threshold markings (520 feet from the runway end). The pairs of bars are at 500-foot intervals as follows:

Distance in Feet from Runway End	No. of Bars in Group
520	3 bars
1020	1 fixed distance bar
1520	2 bars
2020	2 bars
2520	1 bar
3020	1 bar

On shorter runways, these pairs of bars which would extend to within 900 feet of the midpoint of the runway shall be eliminated. The color of the touchdown zone markings shall be retroreflective white.

16. FIXED DISTANCE MARKINGS.

The fixed distance markings are part of the touchdown zone markings if touchdown zone markings are used but may be required for basic runways and nonprecision instrument runways if these are 4,000 feet or more in length and used by jet aircraft. For precision approach instrument runways, the fixed distance markings are used instead of the second set of three-bar touchdown zone markings. The fixed distance markings shall consist of a pair of single, rectangular bars 30 feet wide by 150 feet long located symmetrically about and 36 feet from the runway centerline. The beginning of these bars is 1,020 feet from the runway threshold. The color of these markings shall be retroreflective aviation white.

17. CLOSED OR NONOPERATIONAL RUNWAY MARKINGS.

~~(See figure 4.)~~ Closed runways shall be marked with yellow **X's**~~crosses~~ at each end~~, near the entrances to intersecting active runways and taxiways, and at intervals not greater than 1000 feet. For permanently closed runways, the runway lights shall be disconnected, the runway markings obliterated, and the crosses painted on the surface.~~ **of the runway. The X's shall be placed over the runway designation markings. However, due to construction activity, the X's may be placed just off of the runway end. The markings shall also be placed near the entrances of active intersecting runways and taxiways, and may be placed at other locations if considered necessary.** The ~~crosses~~ **X's** shall have arms 10 feet wide and 60 feet overall length with the arms crossing at right angles as shown in figure 4. For temporarily closed runways, the ~~crosses~~ **X's** may be **reduced to 8 feet in width to permit the use of** ~~made of fabric,~~ plywood, **fabric,** or other material which can be painted the appropriate color~~ and,~~ fastened in place**,** and easily removed. **For permanently closed runways, the runway lights shall be disconnected, the runway markings shall be obliterated, and the X's painted on the surface at intervals not to exceed 1000 feet. The color of the closed runway markings shall be nonretroreflective yellow.** ~~These crosses shall be placed over the runway numbers at each end and at other positions if necessary. For temporarily closed runways, the size of the crosses may be reduced to 8 feet wide arms for right~~

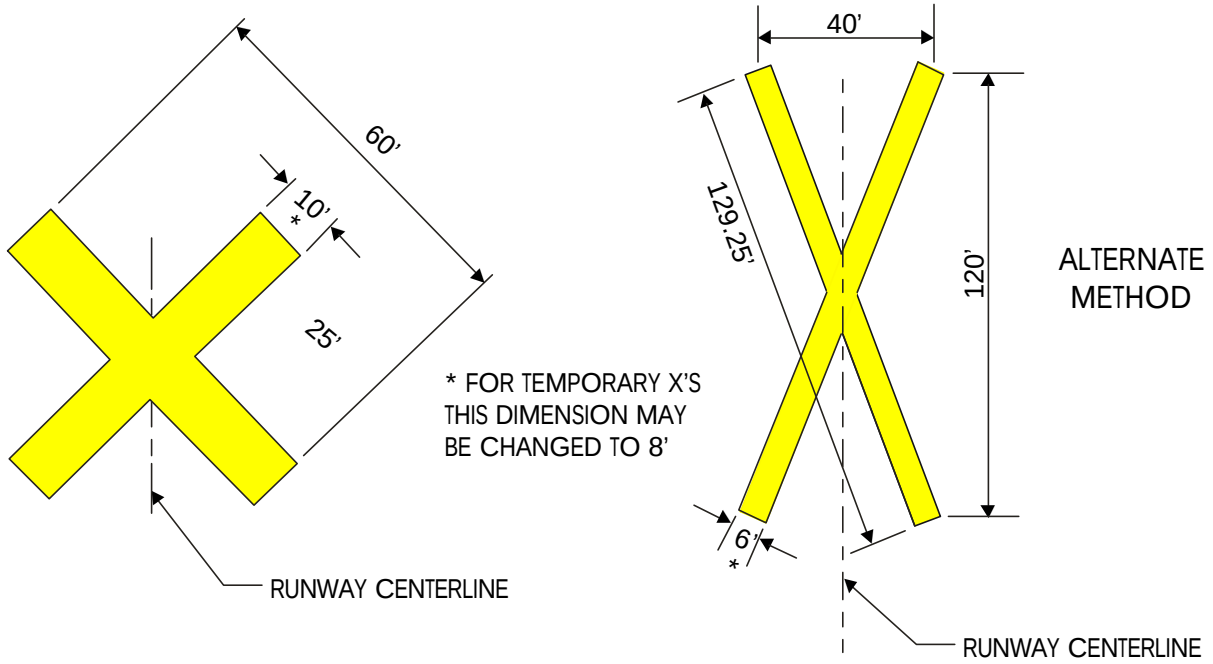

NOTE: THE COLOR OF THE CLOSED RUNWAY MARKINGS SHALL BE NONRETROREFLECTIVE YELLOW.

Figure 4. Closed runway markings detail

~~angle crosses to permit use of standard size sheets of plywood. The color of the closed runway markings shall be nonretroreflective yellow.~~

18. LIGHTED VISUAL AID TO INDICATE TEMPORARY RUNWAY CLOSURE.

A lighted visual aid for indicating a temporarily closed runway shall:

a. Be a portable, towable unit that can be quickly removed from the runway vicinity.

b. Consist of clear incandescent lamps or transmit a white color, arranged in the shape of a letter "X" with arms crossed at 90°. The arms shall be painted yellow on all sides so that the unit will be clearly visible when it is in position.

c. Be energized by a portable power supply capable of a minimum duration of 24 hours of continuous operation.

d. Be controlled so that the lighted signal will flash at an approximate rate of three seconds "on" and one second "off".

e. Provide the following daytime and nighttime visual reference during Visual Flight Rule (VFR) conditions when placed on centerline and within 250 feet of the runway end:

(1) Acquisition by the pilot at a range of at least 5 nautical miles.

(2) Recognizable as a letter "X" from a range of at least 1-1/2 nautical miles.

f. Provide lamp dimming capability for nighttime operations.

g. Produce a signal that provides a horizontal coverage to at least 15 degrees on each side of the runway centerline, and a vertical coverage from 0 degrees to 10 degrees above horizontal, both day and night, at a range of 1-1/2 nautical miles.

h. Withstand a minimum wind speed of at least 40 mph without effecting aiming or operation.

i. Include an illuminated failure indicator that is visible from the back (runway side) of the unit.

19. OPTIONS.

The following options are acceptable, if specified by the purchaser:

a. One person set up in less than 5 minutes.

b. Gasoline, diesel, and other portable power options.

c. Trailer hitch options including tandem towing for on-airport operations.

d. Larger fuel tanks to provide up to 120 hours of continuous operation.

e. Fail safe protection to ensure that the unit stays on as continuous light if the flasher unit should fail.

20. DESIGN RECOMMENDATIONS.

The following recommendations are provided as guidance for the construction of a unit that meets performance requirements. They are not intended to limit or prevent innovation for meeting performance requirements as specified elsewhere in this document.

a. Adjustable aiming and leveling to allow tilting to an optimum angle of five degrees from vertical.

b. Minimum lighting arrangement: nine (9) spotlights mounted on 14-foot arms and spaced 3 feet 6 inches on centers (figure 5). Each spotlight should be a 150W/120V PAR-38 lamp.

c. Forty (40) volt operation for dimming during nighttime operations.

~~18.~~**21.** OVERRUN MARKINGS.

The overrun area markings are a series of chevrons or partial chevrons to be located on the paved overrun area as shown in figure ~~5~~**6**. The apex of the chevrons shall be along the runway centerline with each leg making an angle of 45° to the centerline. The markings shall be only in the overrun area beyond the threshold or runway end. The apex of the initial full chevron shall be 50 feet from the threshold line. The legs of the chevron shall be 3 feet wide and extend out to the edge of the paved area but not more than 100 feet on each side of the centerline. The chevrons shall be equally spaced at 100-foot intervals through the paved overrun area. The final chevron shall be only one-half the width of the full chevrons. The outer half of a chevron for which the apex would be 50 feet down the runway from the threshold shall be terminated at the runway threshold. The color of these markings shall be nonretroreflective yellow.

~~19.~~**22.** RUNWAY SHOULDER MARKINGS.

Paved runway shoulders may be marked to better define the full strength limit of the runway. Often the runway side stripes and the natural contrast between the runway and shoulders are adequate. Runways more than 200 feet wide are more likely to need shoulder markings. Shoulder markings shall be diagonal stripes at 45° to the runway edges uniformly spaced at 100-foot intervals. They shall point away from the runway ends with the change in direction at the runway midpoint. The stripes shall be 3 feet wide and extend from the runway edge to not less than 10 feet from the runway edge as shown in figure ~~6~~**7** or to the outer edge of the shoulder, if this is less. The color of these markings shall be nonretroreflective yellow.

~~20.~~**23.** BORDERS FOR MARKINGS.

For some installations, the runway markings and the runway surface do not provide sufficient contrast for easy recognition. In such cases, the contrast may be improved by outlining the markings with a non-glossy black border. The borders shall be a minimum of 6 inches wide, 12 inches is preferable.

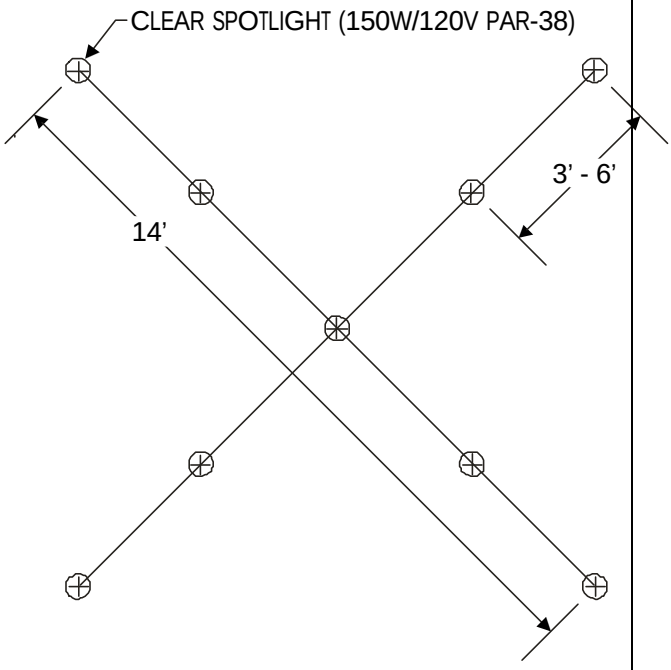

NOTE: FOR ADDITIONAL INFORMATION SEE FAA AC 150/5345-XX (NOT ____ AT THIS DATE)

Figure 5. Lighting Arrangement

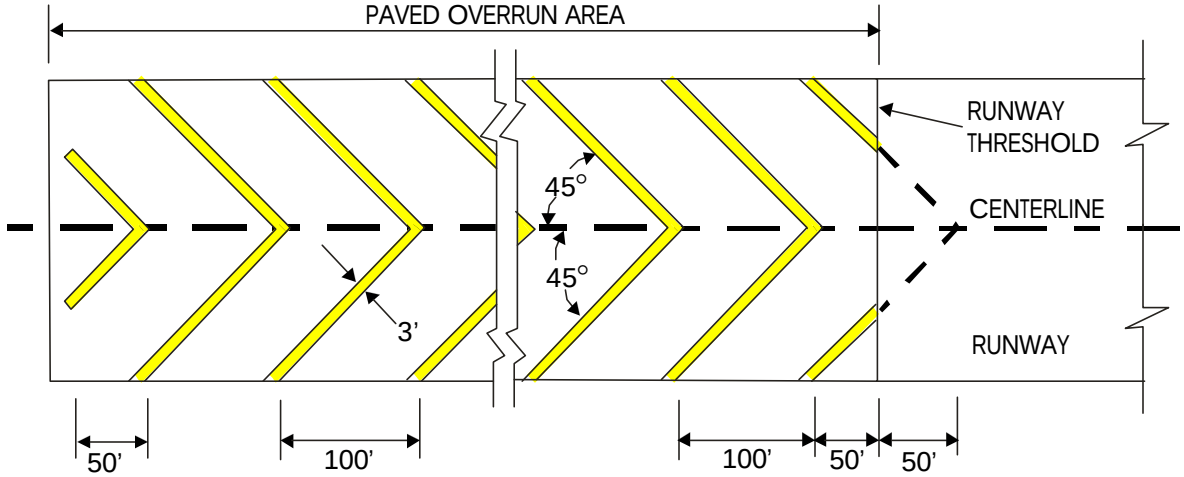

NOTES: 1. COLOR OF CHEVRON MARKINGS IS NONRETROREFLECTIVE YELLOW
2. CHEVRONS ARE USED TO IDENTIFY PAVED AREAS UNUSABLE FOR LANDING, TAKEOFF, ROLLOUT OR TAXIING

Figure ~~65~~. Details for paved overrun markings

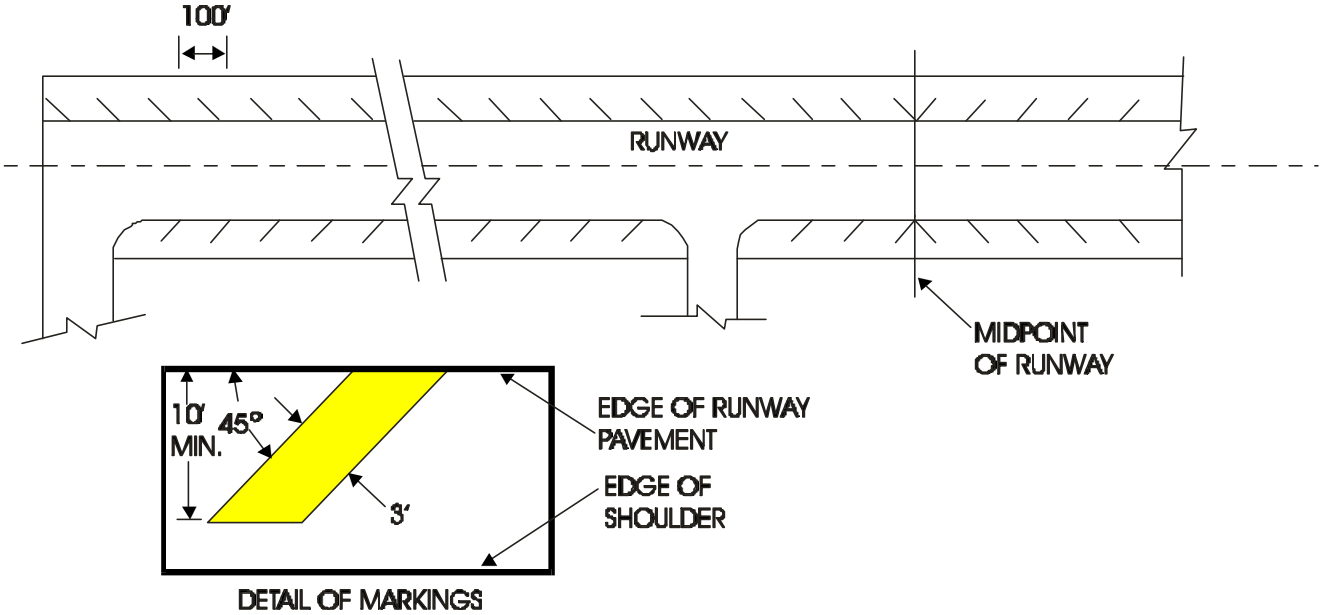

NOTE: COLOR OF RUNWAY SHOULDER MARKINGS IS NONRETROREFLECTIVE YELLOW

Figure ~~76~~. Runway shoulder markings

~~21.~~**24.** STRIATED MARKINGS.

In cold areas where frost heaves of pavement may be a serious problem, the markings may be modified by using striated markings to reduce the effects of uneven heat absorption. Striation of markings is accomplished by applying the paint in narrow stripes alternating with unpainted narrow spaces. From a distance the striated markings will appear as marked areas; however, the contrast of the marked areas will be reduced because of less painted area. Striated markings should be cleaned and repainted more frequently to maintain the contrast level. Striated markings are not recommended for precision approach instrument runways used for Category II and Category III operations. If striated markings are used, the paint shall be applied in uniform stripes 4 to 6 inches wide and separated by uniform spaces not to exceed the width of the striated stripes. The color of the striated markings shall be as required for the particular marking.

~~22.~~**25.** INSTALLATIONS.

~~23.~~**26.** INSTALLATION REQUIREMENTS.

For installation details refer to FAA AC 150/5340-1 and AC 150/5370-10.

~~24.~~**27.** PRECEDENCE OF MARKINGS.

NOTE

If a simulated carrier deck is installed on the runway, the carrier deck markings shall have precedence, and runway markings shall not be installed between the edges of the carrier deck. Touchdown zone and fixed distance markings shall be omitted if any part of them may conflict with the carrier deck installation.

If two runways intersect, the markings of the runway with the higher precedence continues through the intersection and the markings of the lower precedence runway are interrupted. Runway side stripes of both runways may be continued. If the intersection is near the threshold of the lower precedence runway, the threshold markings, designation markings, and touchdown zone markings may be relocated to avoid the intersection area. For intersections of runways of equal precedence, the runway with the greater amount of traffic will have precedence. The order of runway precedence in descending order is as follows:

a. Precision approach instrument runway, Category III.

b. Precision approach instrument runway, Category II.

c. Precision approach instrument runway, Category I.

d. Nonprecision instrument runway.

e. Basic runway.

~~25.~~**28.** MATERIALS.

The materials required for runway markings are paint and retroreflective spheres (beads). The materials used should be approved for the purpose and type of pavement. The approved materials and colors are shown in table 1.

~~26.~~**29.** RESTRICTIONS.

TABLE 1. MATERIALS FOR RUNWAY MARKINGS

Color of Marking	Federal Specification	Authorized Use
Retroreflective White	~~TT-P-85[1/] or~~ TT-P-1952, paint, white and TT-B-1325 glass spheres, type II~~I~~, gradation A. The color shall be FED-STD-595 color chip No. 17875.	All runway markings except arresting gear, overrun, shoulder, and closed runway markings.
Nonretroreflective Yellow	~~TT-P-85[1/] or~~ TT-P-1952 paint, yellow. The color shall be FED-STD-595, chip No. 23538.	Arresting gear, overrun, shoulders, and closed runway markings.
Nonretroreflective Black	~~TT-P-110[1/]~~ Paint, black. The color shall be FED-STD-595, chip No. 27038.	Border around white or yellow markings.

~~[1/] Some area authorities may prohibit or restrict the use of this type of paint.~~

Regulations of some states, such as California, or other authorities may prohibit or restrict the use of solvent base paints. For white and yellow markings ~~this may require using~~**USE** type TT-P-1952 ~~instead of type TT-P-85~~ paint. For the slower drying type TT-P-1952 paint, timing of application of the retroreflective beads (spheres) may be required to assure adherence of the beads without sinking too deeply into the paint. ~~Also the black type TT-P-110 paint may not be acceptable, but~~ Any long-wearing semigloss or flat black paint, such as type TT-P-1952 with black pigment, that is suitable for the surface may be ~~substituted~~**used**.

TECHNICAL MANUAL
RUNWAY THRESHOLD LIGHTS
SHOREBASED AIRFIELDS

Reference Material

~~Definitive Designs for Naval Shorebased Facilities ..... NAVFAC P-272~~
Approach Lights, Category I (ALSF-1) 003 06
Approach Lights, Category II and Category III (ALSF-2) 003 07
Short Approach Light System (SALS) 003 08
Runway Markings 004 01
Displaced Threshold Lights and Markings 004 03
Runway End Lights 004 04
High-Intensity Runway Edge Lights (HIRL) 004 05
Auxiliary Power and Power Transfer Equipment 009 01
PAR-56 Lampholder FAA-E-982
Design Drawings for Visual Air Navigation Facilities ..... UFC 3-535-02
~~Airfield Lighting ..... MIL-HDBK-1023/1~~
Aeronautical Ground Light and Surface Marking Colors ..... ICAO, Annex 14, Vol. 1, App. 1
Light, Marker Airport Approach, High Intensity, Type MB-1 ..... MIL-L-26990
Specification for Runway and Taxiway Light Fixtures ..... FAA AC 150/5345-46
Isolation Transformers for Airport Lighting ..... FAA AC 150/5345-47

Alphabetical Index

Subject **Page No.**

Aiming 4
Approach Threshold Lights 2
Controls 8
Description 2
Dimensions And Tolerances. 4
Displaced Threshold 2
Equipment 5
Existing Installations 2
Fixtures. 5
General Information. 2
Inboard Lights 2
Installation Requirements 2
Installations 2
Interleaving 5
Justification Requirements. 2
Location. 4
Methods Of Installation. 3
Outboard Wing Bar Lights 2
Photometric Requirements. 5
Power. 5
Power And Controls 5

Purpose. 2
Related Facilities. 2
Runway Edge Lights 2
Runway End Lights 2
Schedule Of Lighting Equipment For Threshold Lights 4
Tolerances 4

Record of Applicable Technical Directives

None

1. GENERAL INFORMATION.

2. PURPOSE.

This Work Package (WP) contains the requirements for the Runway Threshold Lights. Threshold lights define the beginning of the runway for approaching aircraft during night operations and during periods of reduced visibility. These threshold light requirements shall be used for all new runway edge light installations. Existing installations, which fail to meet these requirements, should be evaluated to determine the need for replacement.

3. JUSTIFICATION REQUIREMENTS.

Threshold lights shall be provided for the approach ends of all runways equipped with runway edge lights. These threshold lights with the HIRL edge lights and runway end lights are the basic runway lighting system.

4. RELATED FACILITIES.

The related visual aids should include the following:

a. High-Intensity Runway Edge Lights (HIRL) (WP004 05) and Runway End Lights (WP004 04) are integral parts of the basic runway lighting system. A runway end light and threshold light may be combined in a single fixture.

b. Runway markings (WP004 01) of the appropriate class are the visual aids for VFR daytime operations and supplement the lighting aids in IFR and nighttime operations.

c. The threshold lights for the approach light system ALSF-1 (WP003 06), ALSF-2 (WP003 07), and SALS (WP003 08) are a supplement to the runway threshold lights, especially for low-visibility operations.

d. Displaced threshold lights and markings (WP004 03) are used instead of the threshold lights where the beginning of the landing area is not at the runway end but this area may be used for takeoffs or rollout of landings from the opposite direction.

5. DESCRIPTION.

(See figure 1.)

6. The runway threshold lights shall be a straight line of lights at each end of the runway. The lines shall be perpendicular to the runway centerline, and the pattern of lights shall be symmetrical about the centerline. Each line of lights shall consist of two groups, one on each side of the runway centerline. Each group shall have a wing bar of 4 lights outboard of the lines of runway edge lights and an inboard section of 5 lights. These threshold lights shall be elevated type except where facilities such as arresting gear or runway intersections make the use of elevated lights impractical. The outboard lights shall be unidirectional green lights. The inboard lights shall have green beams but the fixtures may be bidirectional with red beams for runway end lights. These threshold lights are connected into and form an integral part of the runway edge light circuit.

7. INSTALLATIONS.

8. INSTALLATION REQUIREMENTS.

For installation details of the runway threshold lights refer to ~~MIL-HDBK-1023/1 and NAVFAC P-272~~**UFC 3-535-02**. General design and installation requirements are given below.

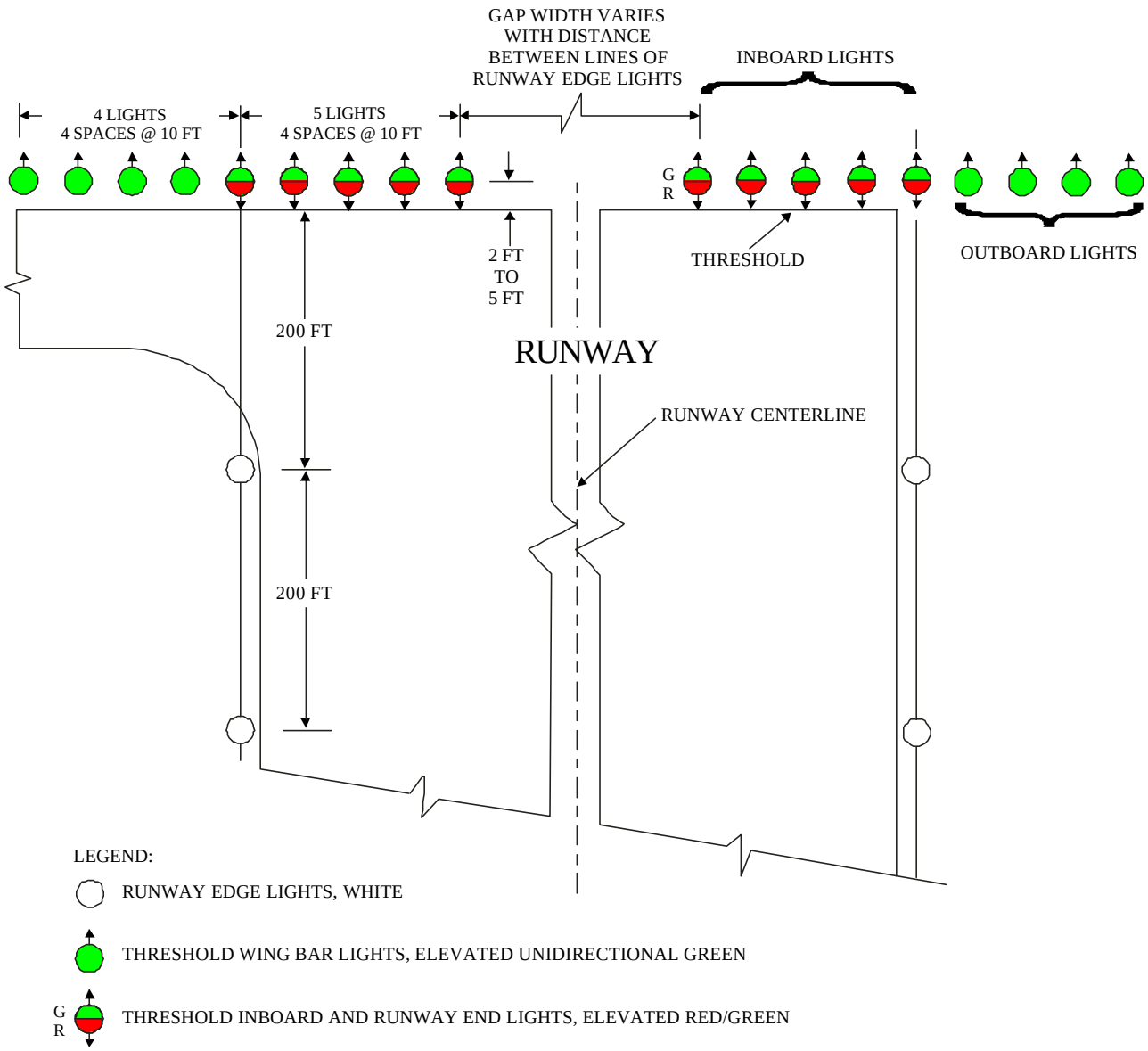

Figure 1. Typical layout plan for runway threshold lights

9. METHODS OF INSTALLATION.

The elevated runway threshold lights may be installed on marker light bases or on conduit elbows set in a concrete base. All elevated lights shall be mounted on frangible couplings. The height of elevated lights shall be not more than 14 inches above the surface. In areas with frequent accumulations of snow to depths of 12 inches or more, and where the nearest inboard lights are more than 50 feet from the runway centerline, with approval by Naval Air Systems Command the height of elevated lights may be increased but shall not exceed 24 inches above the surface. To raise the height of these lights, use longer nipples and, if necessary, longer cables from the secondary connectors of the isolation transformers to the lamps. The manufacturer may be able to supply these items. If semiflush threshold lights are used, the lights shall be mounted on marker light bases set in concrete foundations.

10. LOCATION.

The runway threshold lights shall be located on a line perpendicular to the runway centerline at each end of the runway as shown in figure 1 The line of threshold lights shall not be more than 5 feet from the end of the runway or the runway threshold.

11. DIMENSIONS AND TOLERANCES.

(See figure 1.) The threshold shall be along a straight line at right angles ±1 degree to the runway centerline. The tolerance for the individual lights shall be ±2 inches from the straight line. The threshold lights shall be uniformly spaced at not more than 10-foot intervals starting from the point where the lines of edge lights intersects the line of threshold lights, except for the gap between the inmost inboard lights. The width of this gap varies with the distance between the lines of runway edge lights. Elevated lights shall not be installed within 36 feet of the runway centerline. For semiflush lights, if used, the height shall not exceed one inch.

12. AIMING.

The runway threshold lights shall be aimed with the green beams of light toward the approach zone as follows:

a. Unidirectional elevated lights are oriented horizontally with the axes of the beams parallel to the runway centerline. The axes of the beams are aimed vertically at 6 degrees above horizontal. The tolerance for aiming the lights shall not exceed 1 degree.

TABLE 1. SCHEDULE OF LIGHTING EQUIPMENT FOR THRESHOLD LIGHTS

Purpose Type of Fixture	Lamp Rating and Type	Isolation Transformer	
		Rating	FAA Type AC150/5345-47
Outboard Wing Bar Lights, Elevated, Unidirectional, 8 per threshold.			
FAA-E-982 Green	500W 20A Q20/PAR56/1	500W 20/20A or 500W 6.6/20A	L-830-13 L-830-12
Inboard Section Lights, Elevated, Bidirectional, 10 per threshold.			
MIL-L-26990 Type MB-1 Green/Red	503W 20A Q20A/T20/3	500W 20/20A or 500W 6.6/20A	L-830-13 L-830-12
Semiflush Lights, if used, may be bidirectional or unidirectional.			
FAA AC 150/ 5345-46 Type L-850D or E Green/Red or Green	175W or 200W, 6.6A, as determined by manufacturer (One or two lamps)	One or two 200W, 20/6.6A	L-830-7

LIGHT: THRESHOLD ELEVATED, BIDIRECTIONAL, MIL-L-26990 TYPE MB-1, GREEN/RED

LAMP: 500W, 20A, TYPE Q20A/T20/3

FILTER: GREEN 180°, RED 180°

ISOLATION TRANSFORMER:
FAA AC 150/5345-47 TYPE L-830-13
OR
FAA AC 150/5345-47 TYPE L-830-12

LOCATED AT APPROACH THRESHOLD BAR - OUTER SECTIONS OF INBOARD LIGHTS

LOCATION: RUNWAY THRESHOLD, INBOARD

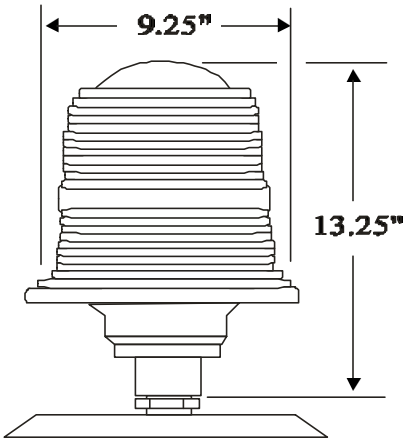

DIMENSIONS ARE FOR REFERENCE ONLY

Figure 2. Typical elevated, bidirectional runway threshold light, type MB-1

a. Bidirectional elevated lights have fixed vertical beams and the beams are toed-in horizontally. The lights shall be level and oriented in azimuth with the two beams toed-in equally toward the runway centerline.

b. Semiflush lights shall be oriented horizontally with the axes of the beams parallel to the runway centerline. The vertical aiming is fixed and is properly aimed when the fixture is level on its mount.

13. EQUIPMENT.

14. FIXTURES.

The lighting equipment required for the runway threshold lights shall be as given in table 1 and shown in figures 2, 3 and 4. Frangible couplings shall be used for mounting the elevated lights. Bidirectional threshold light fixtures may also serve as runway end lights.

15. PHOTOMETRIC REQUIREMENTS.

The runway threshold lights shall be unidirectional lights except the inboard lights may be bidirectional as combination threshold and runway end lights. For unidirectional lights the beam shall be directed into the approach area with the axis parallel to the runway centerline in azimuth. For elevation of the beam of outboard lights, refer to AIMING, this WP. Bidirectional lights may have the axis of the beams toed-in towards the runway centerline at not more than 4.5 degrees. The color of the emitted light shall be aviation green in accordance with ICAO, Annex 14, Vol. 1, App. 1. The intensity of these lights shall be progressively variable in five steps of 100, 20, 4, 0.8, and 0.2 percent of rated intensity. The intensity-beamspread of these lights at rated current shall be as shown in ~~figure 5~~**the appropriate FAA AC for the specific fixture**. The average intensity of the main beam shall be the arithmetic mean of all points inside contour I on a uniform grid with points not more than one degree apart for each coordinate axis of the grid.

16. POWER AND CONTROLS.

17. POWER.

The runway threshold lights are connected to the HIRL series circuit for the runway and are an integral part of the circuit. The circuit may be either 20 or 6.6 amperes for which suitable isolation transformers are required. The emergency power and automatic transfer requirements (WP009 01) are the same as for the HIRL. If the HIRL has two or more circuits and the edge lights are interleaved, the threshold lights shall be interleaved. The approach threshold lights are normally on different circuits separate from the runway threshold lights.

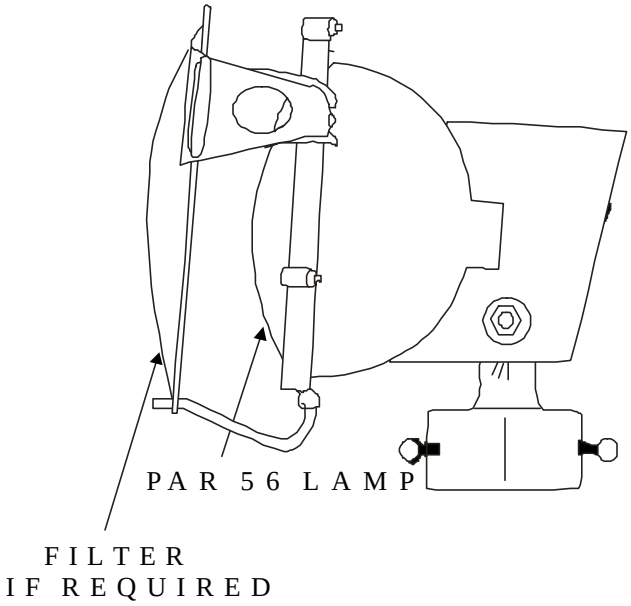

TRANSFORMER: 500W, 20/20A, FAA
AC 150/5345-47, TYPE L-830-13

LIGHT: TYPE FAA-E-982, ELEVATED UNIDIRECTIONAL

LAMP: 500W, 20A, TYPE Q20A/PAR56/1

FILTER: GREEN, TYPE MS24489-2

ISOLATION TRANSFORMER: 500W, 20/20A, FAA AC 150/5345-47 TYPE L-830-13

OR

500W, 6.6/20A, FAA AC 150/5345-47 TYPE L-830-12

LOCATION: RUNWAY THRESHOLD OUTBOARD WING BAR

Figure 3. Typical elevated, unidirectional runway threshold light FAA-E-982

LIGHT: THRESHOLD/RUNWAY END, SEMIFLUSH, BIDIRECTIONAL, FAA AC 150/5345-46, TYPE L-850D, COLORS: GREEN/RED

FILTERS: ONE GREEN AND ONE RED, TYPE AS DETERMINED BY MANUFACTURER. DICHROIC FILTERS MAY BE USED.

ISOLATION TRANSFORMER: TWO, 200W, 20/6.6A, FAA AC 150/5345-47, TYPE L-830-7.
OR
TWO, 200W, 6.6/6.6A, FAA AC 150/5345-47, TYPE L-830-6.

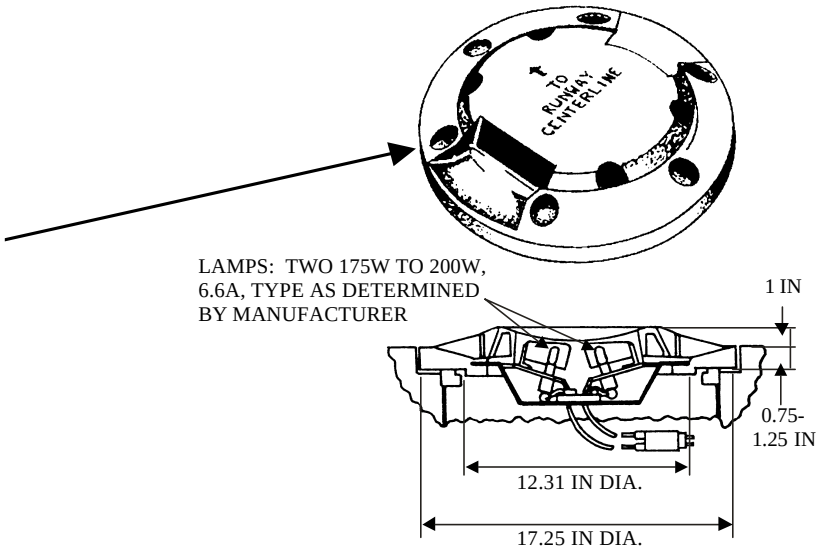

DIMENSIONS ARE FOR REFERENCE ONLY

A. BIDIRECTIONAL LIGHT

LIGHT: THRESHOLD, SEMIFLUSH, UNIDIRECTIONAL, FAA AC 150/5345-46, TYPE L-850E, COLORS: GREEN

FILTERS: GREEN, TYPE AS DETERMINED BY MANUFACTURER. DICHROIC FILTERS MAY BE USED.

LAMPS: ONE 200W or TWO 150W, 6.6A, TYPE AS DETERMINED BY MANUFACTURER.

ISOLATION TRANSFORMER: TWO 200W, 20/6.6A, FAA AC 150/5345-46, TYPE L-830-7.
OR
ONE 300W, 20/6.6A, FAA AC 150/5345-46, TYPE L-830-11.

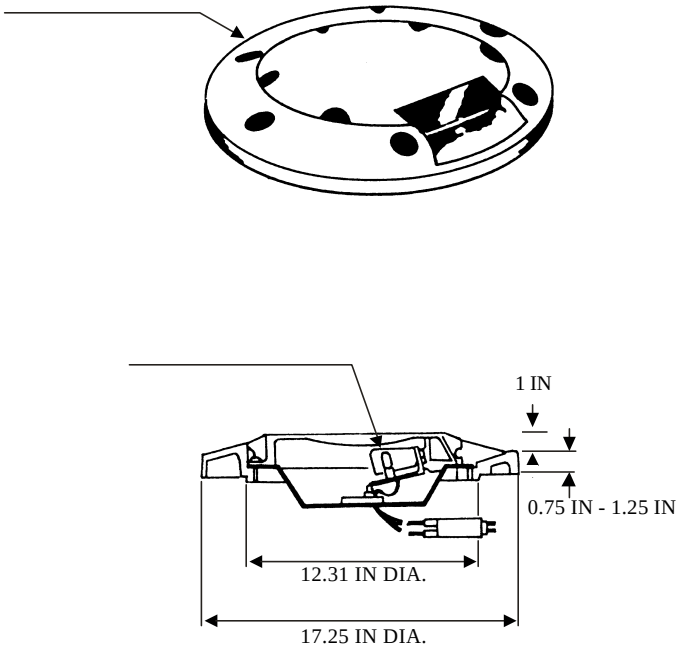

DIMENSIONS ARE FOR REFERENCE ONLY

B. UNIDIRECTIONAL LIGHT

Figure 4. Typical, semiflush runway threshold lights, type FAA L-850D or L-850E

18. CONTROLS.

The runway threshold lights are part of the HIRL circuits and do not have separate controls. Both power and intensity control are provided by the HIRL controls. Normally, operating control is in the air traffic control tower. Local control for maintenance and emergency operations shall be provided in the airfield lighting vault.

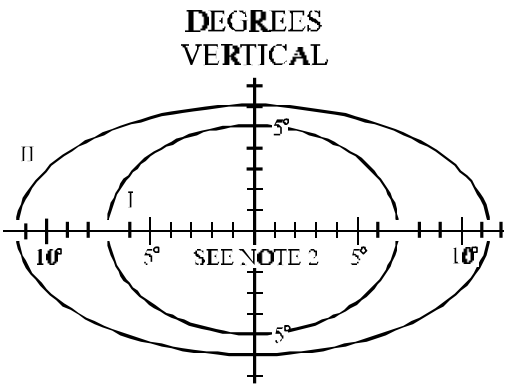

A. OUTBOARD THRESHOLD LIGHTS, GREEN, ELEVATED

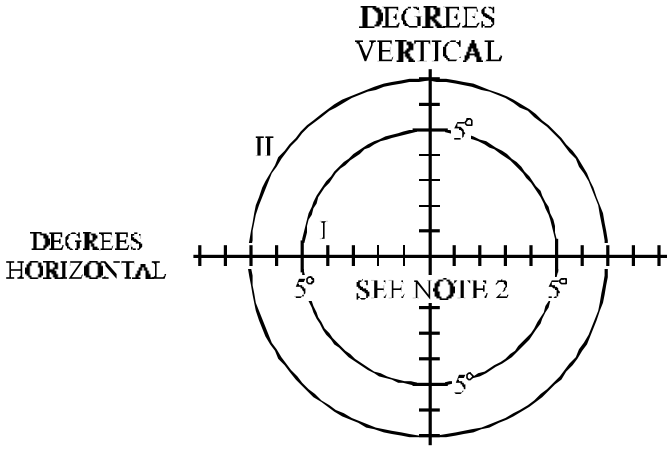

B. INBOARD THRESHOLD LIGHTS, GREEN, ELEVATED OR SEMIFLUSH

	I—50%	II—10%
a	7.0°	11.5°
b	5.0°	6.0°

	I—50%	II—10%
a	5.5°	7.5°
b	4.5°	6.0°

NOTES:

1. ALL CONTOURS ARE ELLIPSES CALCULATED BY EQUATION $\frac{X^2}{a^2} + \frac{Y^2}{b^2} - 1$
2. THE MINIMUM AVERAGE INTENSITY OF THE MAIN BEAM (INSIDE CONTOUR I) IS 10,000 CD FOR AVIATION GREEN. MAXIMUM INTENSITY SHOULD NOT EXCEED 1.5 TIMES ACTUAL AVERAGE INTENSITY.
3. MINIMUM INTENSITY OF I 50% AND II 10% OF REQUIRED MAIN BEAM INTENSITY.

~~Figure 5. Intensity-distribution requirements of runway threshold lights~~

TECHNICAL MANUAL

DISPLACED THRESHOLD LIGHTS AND MARKINGS

SHOREBASED AIRFIELDS

Reference Material

Paint, Airfield Marking, Solvent Base FED-TT-P-85
~~Definitive Designs for Naval Shorebased Facilities ..... NAVFAC P-272~~
Approach Lights, Category I - ALSF-1 ..... 003 06
Approach Lights, Category II and Category III - ALSF-2 ..... 003 07
Short Approach Light System (SALS) 003 08
Medium-Intensity Approach Light System with RAIL (MALSR) 003 14
Runway Markings 004 01
Runway Threshold Lights 004 02
Runway End Lights 004 04
High-Intensity Runway Edge Lights (HIRL) 004 05
Runway Centerline Lights 004 06
Touchdown Zone Lights 004 07
Runway Distance Markers (RDM) 004 09
Colors FED-STD-595
Auxiliary Power and Power Transfer Equipment 009 01
PAR-56 Lampholder FAA-E-982
Design Drawings for Visual Air Navigation Facilities ..... UFC 3-535-02
~~Airfield Lighting ..... MIL-HDBK-1023/1~~
Beads (Glass Spheres), Retroreflective ..... FED TT-B-1325
Paint, Airfield Marking, Water Emulsion ..... FED TT-P-1952
Light, Runway Marker, Elevated, Type C-1 ..... MIL-L-5904
Aeronautical Ground Light and Surface Marking Colors ..... ICAO, Annex 14, Vol. 1, App. 1
Light, Marker Airport Approach, High-Intensity, Type MB-1 ..... MIL-L-26990
Markings of Paved Areas on Airports ..... FAA AC 150/5340-1
Specification for Runway and Taxiway Light Fixtures ..... FAA AC 150/5345-46
Isolation Transformers for Airport Lighting ..... FAA AC 150/5345-47
Standards for Specifying Construction of Airports ..... FAA AC 150/5370-10

Alphabetical Index

Subject **Page No.**

Aiming 7
Approach Threshold Lights 3
Controls 11
Description 3
Description of Lights 3
Description of Markings 5
Dimensions 7
Displaced Area 2
Equipment And Materials 7
General Information. 2
Installation Requirements 5

Installations..... 5
Justification Requirements. 2
Lights 3
Location Of Lights..... 7
Location Of Markings..... 7
Markings..... 5
Materials 7
Methods Of Installation. 5
Permanently Displaced Threshold Lights..... 3
Photometric Requirements. 11
Power..... 11
Power And Control. 11
Purpose. 2
Related Facilities..... 2
Relocated Theshold..... 2
Schedule of Equipment and Materials..... 8
Temporary Displaced Threshold Lights 5
Tolerances..... 7

Record of Applicable Technical Directives

None

1. GENERAL INFORMATION.

2. PURPOSE.

This Work Package (WP) contains the requirements for the lights and markings for runways with displaced thresholds. A displaced threshold exists where the threshold for landings is located down the runway from the physical end of the runway. Displaced thresholds may be permanent or temporary. The displaced area between the runway end and the landing threshold may be used for takeoffs or for rollout when landing from the other directions. Often the reason for the displaced threshold is to provide additional clearance of obstructions in the approach area where it is not practical to remove the obstruction. The purpose of the displaced threshold lights and markings are to clearly define the beginning of the landing area of the runway for pilots making approaches. These lights and markings are used for approaches during daytime, nighttime, and all weather conditions for which the runway is authorized to operate. Runway and threshold lights and runway markings in the displaced area shall be modified to clearly identify that this area is not to be used for landings but to provide visual guidance for takeoffs and rollouts.

3. JUSTIFICATION REQUIREMENTS.

The justification for installing displaced threshold lights and markings is the official approval of operating procedures requiring the landing threshold to be other than at the physical end of the runway. Temporary displaced thresholds (periods less than six moths) may be permitted for repairs or construction in the approach area. These requirements include guidelines for lights and markings of temporary displaced thresholds. For installations where the end of the runway is relocated and the area involved is not intended for use in takeoff and rollouts, the existing threshold and runway lights and markings shall be removed and standard threshold lights and markings installed at the new location. If the pavements in the relocated area remains, it shall be marked as an overrun, or in some cases where it is used as a taxiway, the required taxiway lights and markings shall be installed.

4. RELATED FACILITIES.

The airfield visual aids related to permanently displaced threshold lights and markings include the following:

a. High-Intensity Runway Edge Lights (HIRL) (WP004 05). The displaced threshold lights shall be connected to and integrated into the HIRL as part of the circuit for power and control.

b. Threshold lights (WP004 02). The threshold lights for this approach shall be modified to runway end lights or removed.

c. Runway end lights (WP004 04). New lights or modified threshold end lights with red light through

360° shall be provided at the physical end of the runway.

d. Runway markings (WP004 01). The runway markings shall be changed to conform to the new threshold and runway length and the old markings removed, except the runway edge markings, if used, shall remain in the displaced area.

e. Runway Centerline Lights (RCL) (WP004 06). If the distance of displacement is 700 feet or less, the approach side of the RCL shall be obscured. For thresholds displaced more than 700 feet in length the sections of RCL in the displaced area are circuited so this section of RCL may be switched "OFF" during landing operations and switched "ON" for takeoff and rollout operations.

f. Touchdown Zone Lights (TDZL) (WP004 07). The TDZL in the displaced area shall be disconnected and the standard TDZL configuration installed as related to the displaced threshold position.

g. Approach Lights — ALSF-1 (WP003 06), ALSF-2 (WP003 07), SALS (WP003 08), or MALSR (WP003 14). The approach lights shall be relocated to the displaced threshold position and all lights in the displaced area between the lines of runway edge lights shall be semiflush type lights. The approach threshold lights will then be only those lights between the displaced threshold lights which are required for the approach lights system.

h. Runway Distance Markers (RDM) (WP004 09). Since the RDM is related to the rollout end of the runway, the location of the markers and the numerals are not changed by displacing the threshold. However, if the displaced threshold is beyond one or more RDM, the approach side of the RDM should be blanked out.

5. DESCRIPTION.

6. LIGHTS.

The displaced threshold lights shall be a line of lights at the designed threshold (figure 1). This line of lights shall be in two groups, one on each side of the runway. Each group shall consist of an elevated white-green bidirectional light in the line of runway edge lights, outboard green lights, and may include inboard lights.

7. Permanently Displaced Threshold Lights.

If the threshold is permanently displaced, and the section between the end of the runway and the displaced threshold is used for takeoffs and rollouts, the lights shall be permanently installed. The outboard lights shall be not less than 4 elevated, unidirectional green lights in each group and the light in each line of runway edge lights shall be an elevated, bidirectional light with the green beam towards the approach and a white beam in the opposite direction. The inboard lights in each group shall be not less than 4 semiflush, unidirectional green lights in addition to the light in the line of runway edge lights. At the physical end of the runway are two groups of red lights in a line perpendicular to and symmetrical about the runway centerline. Each group of runway end lights shall have not less than 5 elevated lights which are red through 360°. The runway edge lights along the edge of the displaced area shall be changed to emit white light along the runway and red light toward the approach zone. For relocated or permanently displaced thresholds and if the displaced section of the runway is not used for takeoffs or rollouts, the existing threshold lights, runway end lights, runway edge lights, centerline lights, and touchdown zone lights in the displaced area shall be removed. The threshold and runway end lights shall be installed in the standard configuration at the displaced threshold. The edge, centerline, and touchdown zone lights should be converted to the standard configurations starting at the displaced threshold.

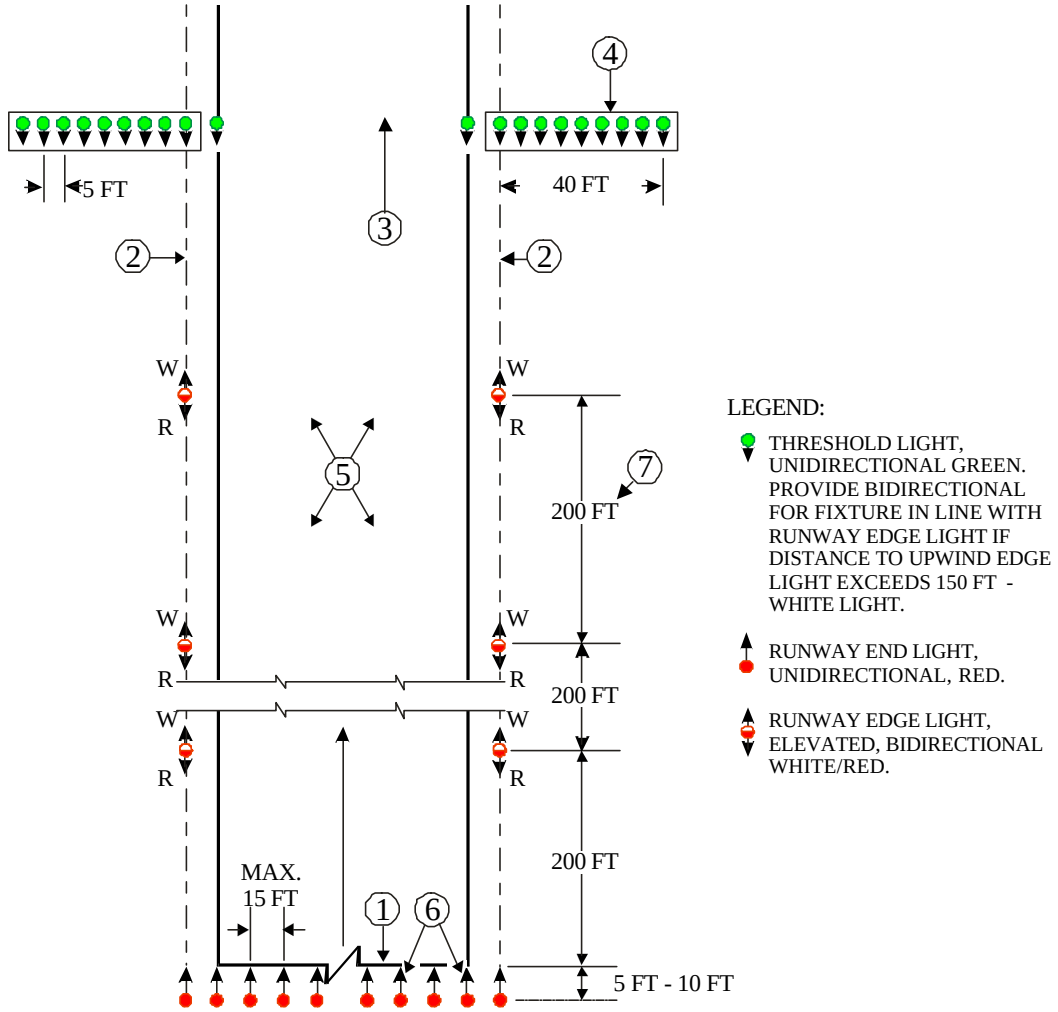

1. INDICATES END OF RUNWAY PAVEMENT (TAKE-OFF THRESHOLD).
2. RUNWAY EDGE LIGHT LINE.
3. INDICATES LOCATION OF THRESHOLD OF USABLE LANDING AREA.
4. WINGED OUT THRESHOLD BAR MARKING LOCATION OF THRESHOLD OF USABLE LANDING AREA.
5. INDICATES OPERABLE PAVEMENT FOR GROUND AIRCRAFT MOVEMENT BETWEEN LANDING AND TAKE-OFF THRESHOLD.
6. INBOARD RUNWAY END LIGHT LIGHTS MARKING LOCATION OF TAKE-OFF THRESHOLDS.
7. UNIFORM SPACING BETWEEN RUNWAY EDGE LIGHTS IS TO APPROACH BUT NOT EXCEED 200 FT.

NOTES:

1. **IF THE PORTION OF PAVEMENT BETWEEN THE RUNWAY END AND THE DISPLACED THRESHOLD IS NOT USABLE FOR ROLL OUT OR TAKEOFF, REMOVE RUNWAY EDGE LIGHTS AND RUNWAY END LIGHTS AND MARK THAT SECTION AS PAVED OVERRUN (WP004 01 FIG. 5) AND USE STANDARD THRESHOLD LIGHTS (WP004 02) AND RUNWAY END LIGHTS (WP004 04).**
2. **SPACING FOR DISPLACED THRESHOLD LIGHTS IS 10' CENTERS. SPACING FOR RUNWAY END LIGHTS IS 10' CENTERS.**
3. **THE DISPLACED THRESHOLD LIGHT IN THE LINE OF RUNWAY EDGE LIGHT MAY BE AN EXISTING LIGHT OR AN ADDED LIGHT IF THE DISPLACED THRESHOLD IS NOT LOCATED AT AN EXISTING LIGHT.**

Figure 1. Typical displaced threshold lighting configuration

8. Temporary Displaced Threshold Lights.

For temporary displaced thresholds (6 months or less) the displaced section may or may not be used for takeoffs and rollouts. If the displaced section is used for rollout and takeoff operations, the temporary lights shall be installed as in figure 1. The displaced threshold lights shall be not less than 4 elevated, unidirectional, green lights outboard, not less than 4 semiflush, unidirectional, green lights inboard, and one elevated bidirectional, green/white light in the line of runway edge lights on each side of the displaced threshold. The runway end lights shall be not less than 5 bidirectional, red/red lights (usually the existing permanent threshold lights) on each side of the permanent runway threshold. The existing runway edge lights along the displaced section shall be converted to bidirectional, red/white lights. Runway centerline lights in the displaced area shall be opaqued out in the approach direction, or if more than 700 feet in length, shall be circuited for remote control of these lights in the displaced area to be turned off during approaches to this threshold and to be turned on for takeoffs in this direction and for landings or takeoffs in the opposite direction. Touchdown zone lights may have the lights disabled in the area for short displaced sections or discontinue using the touchdown zone light system for displaced sections more than 700 feet in length. If the displaced section of runway is not used for rollouts and takeoffs, such as during construction on this area of runway, the permanent threshold lights, runway end lights, runway edge lights, centerline lights, and touchdown zone lights in the displaced section shall be disabled. Runway end lights shall be provided at the displaced threshold by using bidirectional green/red inboard threshold lights. For short lengths of displaced sections, the lights may be disabled by removing the lamps or disconnecting the secondary connections from the isolation transformers. For longer displacements, were more than 25 percent of the lights in the circuit will be disabled, this part of the circuit should be disconnected.

9. MARKINGS.

The runway markings for the displaced threshold area as shown ~~if~~ **in** figure 2 shall consist of the following non-retroreflective painted markings:

a. Transverse white stripe across the runway at the established displaced threshold.

b. Four yellow ~~chevrons~~ (arrowheads without shafts) on the approach side pointing at the transverse stripe.

c. A series of yellow arrows along the runway centerline. The runway white side stripes, if used, shall extend along the runway edge through the displaced area **(see figure 2c)**.

d. For temporary displaced thresholds, all existing threshold markings and runway designation markings short of the new threshold shall be removed or completely and safely covered. The temporary threshold markings, runway designation marking, chevrons, and arrows may be made using tape or temporary paint of the required color.

e. For relocated threshold, see figure 1, Note 1.

f. The new threshold and designation markings shall be standard (see WP004 01), except for temporary displaced threshold, temporary white paint or white tape may be used.

10. INSTALLATIONS.

11. INSTALLATION REQUIREMENTS.

For installation details of the displaced threshold lights and markings refer to ~~MIL-HDBK-1023/1 and NAVFAC P-272~~**UFC 3-535-02** for the lights and FAA AC 150/5340-1 and AC 150/5370-10 for the markings. General design and installation requirements are given below.

12. METHODS OF INSTALLATION.

The elevated threshold, runway end, and runway edge lights may be installed on marker light bases or on conduit elbows set in a concrete base. All elevated lights shall be mounted on frangible couplings. The height of elevated lights shall be not more than 14 inches above the surface. In areas with frequent accumulations of snow to depths of 12 inches or more, with approval by Naval Air Systems Command the maximum height of elevated lights may be increased but shall not exceed 24 inches above the surface. To raise the height of these lights, use longer nipples and, if necessary, longer cables from the secondary connectors of the isolation transformers to the lamps. The manufacturer may be able to supply these items. The semiflush lights shall be mounted on marker light bases.

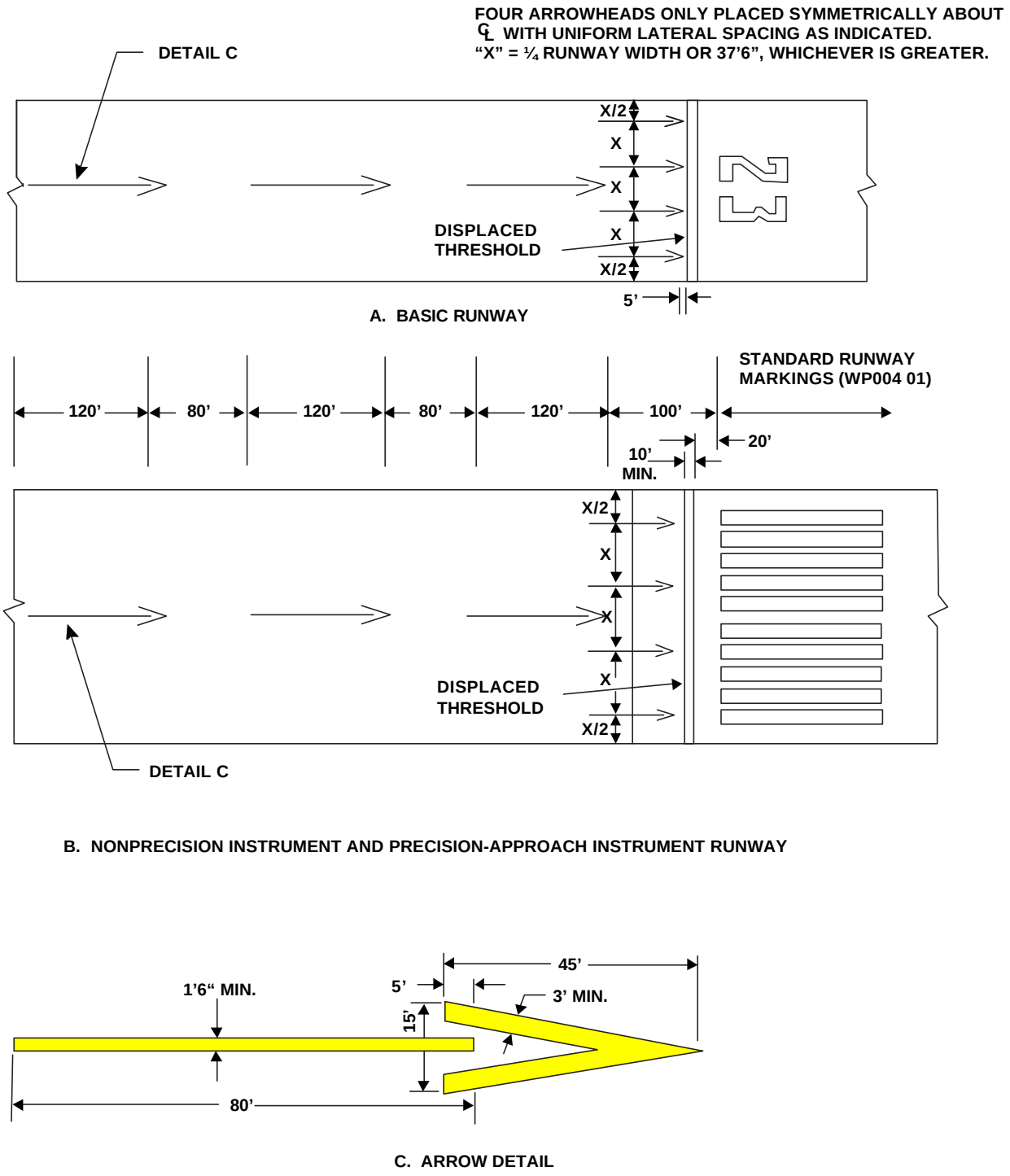

NOTE: THE COLOR OF ARROWS AND CHEVRONS SHALL BE NONRETROREFLECTIVE YELLOW, AND THE DISPLACED THRESHOLD BAR SHALL BE NONRETROREFLECTIVE WHITE.

Figure 2. Displaced threshold markings configuration

13. LOCATION OF LIGHTS.

The displaced threshold lights shall be at or within 2 feet of the established displaced threshold in a line perpendicular to and symmetrical about the runway centerline (figure 1) with a group of lights at each side of the runway. Within each group the lights shall be equally spaced and the spacings start from the line of runway edge lights. If the line of threshold lights is not at an existing runway edge light, an elevated edge light shall be installed in the edge light line on each side. The line of runway end lights shall be located not more than five feet beyond the end of the runway. Often these lights are the previous threshold-runway end lights fixtures already installed.

14. LOCATION OF MARKINGS.

(See figure 2). The transverse threshold stripe shall be perpendicular to the runway centerline with the edge nearer the runway end at the established displaced threshold. The four chevron markings shall have the apexes in a line five feet from the approach edge of the transverse stripe and shall be uniformly spaced and symmetrical about the runway centerline. The spacing shall be one-fourth of the runway width or 37’ 6” whichever is greater. The centerline arrows shall be located on the runway centerline with the head of the first arrow into the displaced are 100 feet from the beginning of the threshold markings. The arrows shall be 120 feet long with 80 feet between adjacent arrows. The existing runway side stripes, if used, shall be retained.

15. DIMENSIONS.

The spacing of the threshold lights shall be on 10-foot centers for both outboard and inboard lights starting from the light in the line of runway edge lights. The equal spacing of the runway end lights shall be on 10-foot centers for each group. Aiming of unidirectional lights shall be into the approach zone and parallel to the runway centerline and 6 degrees above horizontal. Bidirectional lights are toed-in 3.5 degrees toward the centerline. The transverse threshold stripe shall be not less than 10 feet wide. The new threshold markings, or runway designation markings for basic runways, shall begin 20 feet down the runway from the transverse threshold stripe. The chevrons at the transverse stripe or arrow heads shall be 45 feet long and 15 feet wide with a stroke width of not less than 36 inches. The shaft of the arrow shall be 80 feet long, not less than 18 inches or more than 36 inches wide, and shall overlap the open end of the chevron by 5 feet. The total length of the arrow is 120 feet (figure 2c).

16. TOLERANCES.

The tolerances for installing the displaced threshold lights and markings shall be as follows:

a. Equal spacings of light centers ±2 inches.

b. Individual lights from the line of lights ±2 inches.

c. Line of threshold or runway end lights from designed locations ±3 inches.

d. Angle of line of lights or markings from right angles to centerline ±1 degree.

e. Variation in height of individual lights from average for line ±1 inch.

f. Edges of markings, variation from straight lines ±1 inch per 50 feet.

g. Lengths, spacings, and separation of markings ±6 inches.

h. Aiming of lights ±1 degree.

17. EQUIPMENT AND MATERIALS.

The lighting equipment for the displaced thresholds shall be as shown in table 1 and figures 3, 4, and 5. If the two additional runway edge lights at the displaced threshold are needed, they shall be the same type as the existing runway edge lights but with green filters on the approach side. The displaced threshold markings shall be non-retroreflective white except temporary markings may be of any type of commercial white paint or tape suitable for the purpose. The paint or tape for temporary markings should consider color, wearing ability for the expected period of use, and capability of being removed easily. Regulations of some states, such as California, or other authorities may prohibit or restrict the use of solvent base paints. For white and yellow markings, this may require using type TT-P-1952 instead of type TT-P-85 paint. For the slower drying type TT-P-1952 paint, timing of application of the retroreflective beads (spheres) may be required to assure adherence of the beads without sinking too deeply into the paint.

TABLE 1. SCHEDULE OF LIGHTING EQUIPMENT AND MATERIALS FOR DISPLACED THRESHOLD LIGHTS AND MARKINGS

Purpose Type of Fixture	Lamp Rating and Type	Isolation Transformer Rating	Isolation Transformer FAA Type AC150/5345-47
Outboard Displaced Threshold Lights, Elevated, Unidirectional.			
FAA-E-982 Green	500W 20A Q20/PAR56/1	500W 20/20A or 500W 6.6/20A	L-830-13 L-830-12
Inboard Displaced Threshold Lights, Semiflush, Unidirectional, 8.			
FAA AC 150/ 5345-46, Type L-850E, Green	200W, 6.6A or two 150W 6.6A, Manufacturer determined.	200W 20/6.6A or 300W 20/6.6A	L-830-7 L-830-11
Runway End Light for Displaced Threshold, Elevated, Bidirectional, 10.			
MIL-L-26990 Type MB-1 Red/Red	503W 20A Q20A/T20/3	500W 20/20A or 500W 6.6/20A	L-830-13 L-830-12
Runway Edge Light for Displaced Threshold, Elevated, Bidirectional, 0 to 2 and Modify Exiting Lights to Show Red/White.			
MIL-L-5904 Type C-1 Green/White or	204W 6.6A 6.6A/T14/2P	200W 20/6.6A or 200W 6.6/6.6A	L-830-7 L-830-6
FAA AC 150/ 5345-46 Type L-862 Green/White	200W, 6.6A, as determined by manufacturer.	200W 20/6.6A or 200W 6.6/6.6A	L-830-7 L-830-6

Displaced Threshold Markings.

Nonretroreflective yellow, Spec, FED TT-P-85[1/] or TT-P-1952, yellow, color FED-STD-595, color chip No. 23538.[2/]

Nonretroreflective white, Spec, FED TT-P-85[1/] or TT-P-1952, white, color FED-STD-595, color chip No. 17875.[2/]

Retroreflective white, Spec, FED TT-P-85[1/] or TT-P-1952, white, color FED-STD-595, color chip No. 17875 with Spec. FED-TT-B-1325 glass spheres, type III, gradation A.

[1/] Some authorities may prohibit or restrict the use of this type of paint.
[2/] Temporary displaced threshold markings may use tape or temporary paint of the required color.

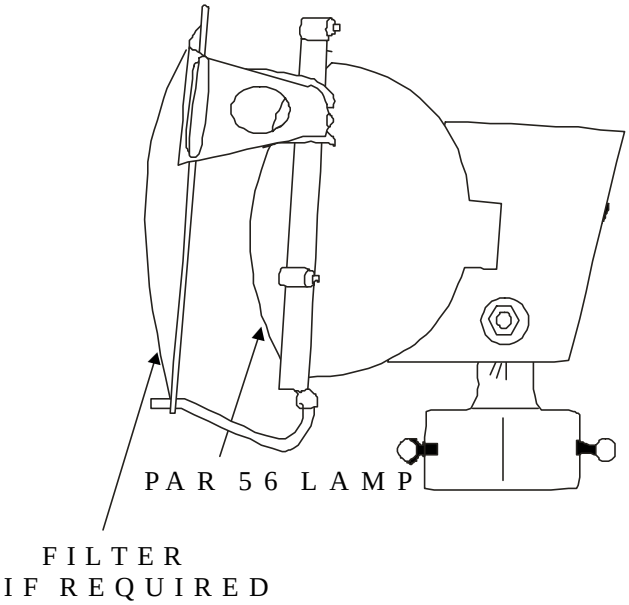

TRANSFORMER: 500W, 20/20A, FAA
AC 150/5345-47, TYPE L-830-13

LIGHT: TYPE FAA-E-982, ELEVATED UNIDIRECTIONAL

LAMP: 500W, 20A, TYPE Q20A/PAR56/1

FILTER: GREEN, TYPE MS24489-2

ISOLATION TRANSFORMER: 500W, 20/20A, FAA AC 150/5345-47 TYPE L-830-13

OR

500W, 6.6/20A, FAA AC 150/5345-47 TYPE L-830-12

LOCATION OF USE: DISPLACED THRESHOLD OUTBOARD WING BAR

Figure 3. Typical outboard displaced threshold light FAA-E-982

LIGHT: INBOARD, SEMIFLUSH UNIDIRECTIONAL
FAA AC 150/5345-46 TYPE L-850E

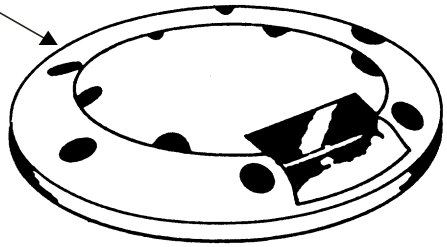

LAMP: 200W, 6.6A, OR TWO 150W, 6.6A, TYPE AS SPECIFIED BY MANUFACTURER

FILTER: GREEN, MAY BE DICHROIC

ISOLATION TRANSFORMER: 200W, 20/6.6A, FAA AC 150/535-47 TYPE L-830-7
OR
300W, 20/6.6A, FAA AC 150/5345-47 TYPE L-830-11

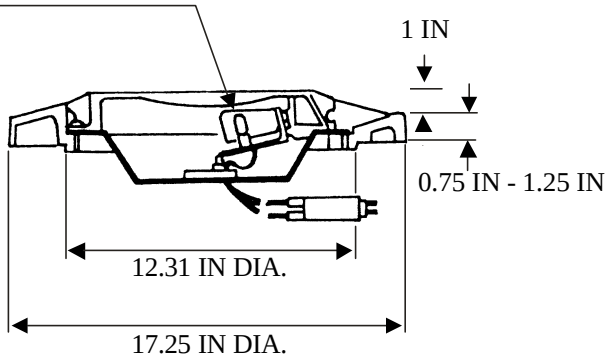

DIMENSIONS ARE FOR REFERENCE ONLY

LOCATION OF USE: INBOARD DISPLACED THRESHOLD

Figure 4. Typical inboard displaced threshold light, type FAA-L-850E

LIGHT: RUNWAY END ELEVATED, BIDIRECTIONAL, MIL-L-26990 TYPE MB-1, RED/RED

LAMP: 500W, 20A, TYPE Q20A/T20/3

FILTER: RED/RED

ISOLATION TRANSFORMER: 500W, 20/20A, FAA AC 150/5345-47 TYPE L-830-13

LOCATION OF USE: RUNWAY END

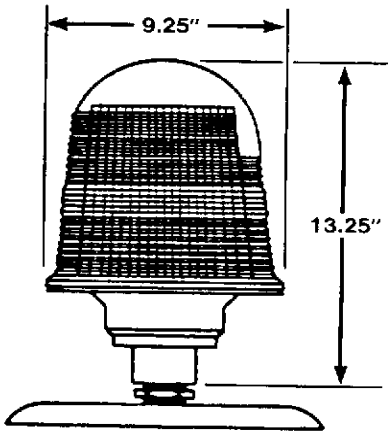

DIMENSIONS ARE FOR REFERENCE ONLY

Figure 5. Typical runway end light for displaced threshold, type MB-1

18. PHOTOMETRIC REQUIREMENTS.

The displaced threshold lights shall be unidirectional lights. The axes of the beams shall be directed toward the approach area parallel to the runway centerline in azimuth. For elevation of the beam of the outboard lights, refer to DIMENSIONS, this WP. The color of the emitted light shall be aviation green in accordance with ICAO, Annex 14, Vol. 1, App. 1. The intensity of these lights shall be progressively variable in five steps of 100, 20, 4, 0.8, and 0.2 percent of the rated intensity as part of the HIRL power circuit. The intensity-beamspread of these lights at rated current shall be as shown in ~~figure 6~~**the appropriate FAA AC for the specific fixture**. The average intensity of the main beam shall be the arithmetic mean of all points inside contour I on the uniform grid with points not more than one degree apart for each coordinate axis.

The runway end lights shall be bidirectional lights emitting aviation red light in both directions. The intensity of the main beams of the runway end lights shall be not less than 2,500 candelas at rated current.

19. POWER AND CONTROL.

20. POWER.

All of the lights used for the displaced thresholds are connected to the HIRL series circuit for this runway and are an integral part of the circuit. The primary series circuit may be either 20 or 6.6 amperes for which suitable isolation transformers are required. The emergency power and automatic transfer requirements (WP009 01) are the same as for the HIRL. If the HIRL has two or more circuits and the edge lights are interleaved, the threshold lights shall be interleaved. The threshold lights for ALSF-1 and ALSF-2 approach lighting system are normally on approach light circuits and not the runway threshold lights.

21. CONTROLS.

The displaced threshold lights are part of the HIRL circuits and do not have separate controls. Both power and intensity control are provided by the HIRL controls. If the length of the displaced threshold is more than 700 feet and runway centerline lights (RCL) are installed, the section of RCL in the displaced area should be provided with separate controls to permit switching "OFF" these lights for landing operations on this runway and switching "ON" these lights for takeoffs on this runway and for takeoff or landing operations in the opposite direction.

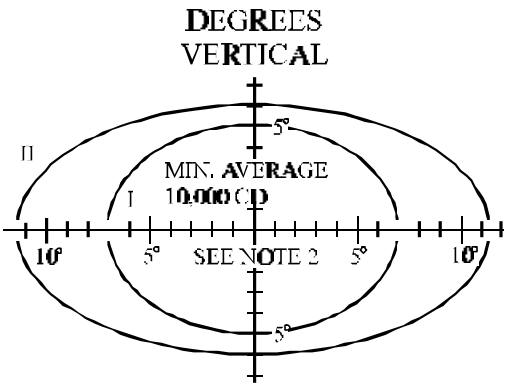

A. OUTBOARD THRESHOLD LIGHTS, GREEN, ELEVATED

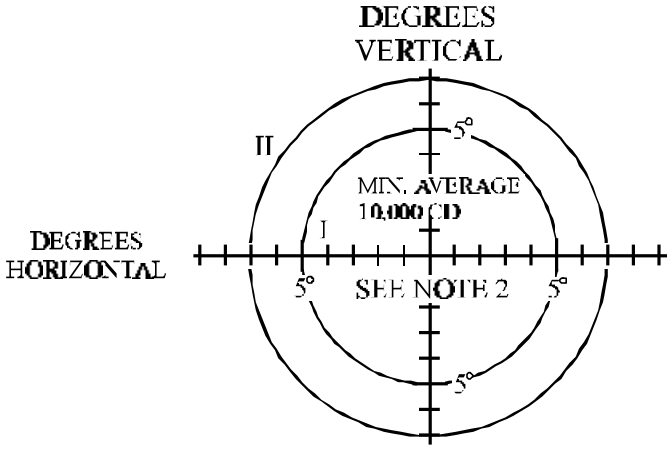

B. INBOARD THRESHOLD LIGHTS, GREEN, ELEVATED OR SEMIFLUSH

	I—50%	II—10%
a	7.0°	11.5°
b	5.0°	6.0°

	I—50%	II—10%
a	5.5°	7.5°
b	4.5°	6.0°

NOTES:

1. ALL CONTOURS ARE ELLIPSES CALCULATED BY EQUATION $\frac{X^2}{a^2} + \frac{Y^2}{b^2} = 1$
2. THE MINIMUM AVERAGE INTENSITY OF THE MAIN BEAM (INSIDE CONTOUR I) IS 10,000 CD FOR AVIATION GREEN. MAXIMUM INTENSITY SHOULD NOT EXCEED 1.5 TIMES ACTUAL AVERAGE INTENSITY.
3. MINIMUM INTENSITY OF I 50% AND II 10% OF REQUIRED MAIN BEAM INTENSITY.

~~Figure 6. Intensity-distribution requirements of displaced threshold lights~~

TECHNICAL MANUAL

RUNWAY END LIGHTS

SHOREBASED AIRFIELDS

Reference Material

Introduction 002 00
~~Definitive Designs for Naval Shorebased Facilities ..... NAVFAC P-272~~
Runway Threshold Lighting 004 02
Displaced Threshold Lights and Markings 004 03
High-Intensity Runway Edge Lights (HIRL) 004 05
Electrical Power and Control for Visual Aids 009 00
Auxiliary Power and Power Transfer Equipment 009 01
Design Drawings for Visual Air Navigation Facilities ..... UFC 3-535-02
~~Airfield Lighting ..... MIL-HDBK-1023/1~~
Light, Runway Marker, Elevated, Type C-1 ..... MIL-L-5904
Aeronautical Ground Light and Surface Marking Colors ..... ICAO, Annex 14, Vol. 1, App. 1
Light, Marker, Airport, Semiflush MIL-L-26202
Light, Marker, Airport Approach, High Intensity, Type MB-1 ..... MIL-L-26990
Specification for Airport Light Base and Transformer Housing ..... FAA AC 150/5345-42
Specification for Runway and Taxiway Light Fixtures ..... FAA AC 150/5345-46
Isolation Transformers for Airport Lighting ..... FAA AC 150/5345-47

Alphabetical Index

Subject **Page No.**
Aiming 2
Controls 8
Description 2
Dimensions 5
Displaced Threshold 2
Emergency Transfer Equipment 7
Equipment 5
Existing Installations 2
General Information. 2
Installation Requirements 2
Installations 2
Justification Requirements. 2
Methods Of Installation. 2
Photometric Requirements. 5
Power. 7
Power And Controls 7
Purpose. 2
Related Facilities 2
Schedule Of Lighting Equipment For Runway End Lights 5
Tolerances 5

Record of Applicable Technical Directives

None

1. GENERAL INFORMATION.

2. PURPOSE.

This Work Package (WP) contains the requirements for the runway end lights. These lights define the longitudinal limits or ends of the runway during landing rollout and takeoff operations at night and during reduced visibility. The requirements for runway end lights shall apply for all new installations and should be considered for replacement of existing runway end lights. Existing runway end lights may be used and maintained unless all lights for one end of the runway are to be replaced.

3. JUSTIFICATION REQUIREMENTS.

Runway end lights shall be provided for any runway that is equipped with runway edge lights. Runway end lights are required for:

a. Nighttime operations in Visual Flight Rules (VFR) operations.

b. Instrument Flight Rules (IFR) operations (WP002 00).

For new installations and for all runways to be used for IFR operations, the runway end lights shall be the high-intensity type.

4. RELATED FACILITIES.

The runway end lights shall be an integral part of the High-Intensity Runway Edge Lights (HIRL) (WP004 05) circuit and normally share the bidirectional runway threshold light fixtures (WP004 02); however they may be separate fixtures. If the runway has a displaced threshold (WP004 03), the runway end lights will have separate fixtures located at the runway end and not at the threshold.

5. DESCRIPTION.

6. The runway end lights shall be located at each end of the runway end along a line beyond the end of the full strength pavement and consist of two groups of lights symmetrically arranged about the runway centerline (see figure 1). Each group shall have not less than 5 elevated lights and shall be equally spaced beginning in line with the runway edge lights and extending towards the runway centerline. The runway end lights and the threshold lights normally share the same bidirectional fixtures. The red beams directed along the runways are the runway end lights, and the green beams directed into the approach zone are the runway threshold lights. In other facilities, maintenance problems, or existing installations make it impractical to use elevated fixtures for runway end lights, semiflush bidirectional lights may be used. If the runway threshold is displaced, runway end lights shall be at the end of the useful runway pavement (figure 2). The runway end lights at displaced threshold areas shall be two groups of not less than 5 elevated bidirectional red lights. The color of the beams of lights shall be red in both directions.

7. INSTALLATIONS.

8. INSTALLATION REQUIREMENTS.

For details on design and installation of the runway end lights refer to ~~MIL-HDBK-1023/1 and NAVFAC P-272~~**UFC 3-535-02**. General equipment design and installation requirements for runway end lights are given below.

9. METHODS OF INSTALLATION.

The runway end lights are usually elevated type fixtures. They may be combined with the threshold lights into single bidirectional fixtures with the green beams directed towards the approach zone and the red beams along the runway. These elevated lights shall be mounted on frangible couplings which may be installed on light bases or conduit elbows set in concrete foundations. The height of elevated lights shall be not more than 14 inches above the surface. In areas with frequent accumulations of snow to depths of 12 inches or more, and where the nearest inboard lights are more than 50 feet from the runway centerline, the height of elevated lights with approval by Naval Air Systems Command may be increased but shall not exceed 24 inches above the surface. To raise the height of these lights, use longer nipples and, if necessary, longer cables from the secondary connectors of the isolation transformers to the lamps. The manufacturer may be able to supply these items. The beams of these bidirectional lights are toed-in towards the runway centerline at 3.5 to 4 degrees. For some installations, semiflush fixtures are used as runway end lights to reduce the damage to lights from aircraft, arresting gear, or surface vehicles. These lights are combined with the threshold lights into single fixtures mounted on light bases. The elevation angles for the light beams are fixed for both elevated and semiflush fixtures, and this aiming only requires correct leveling of the fixtures as they are installed. The azimuth aiming requires the correct orienting horizontally of the fixture. This aiming provides for the toe-in of the beams of the elevated lights, and aligns the axes of beams of the semiflush lights parallel to the runway centerline. The

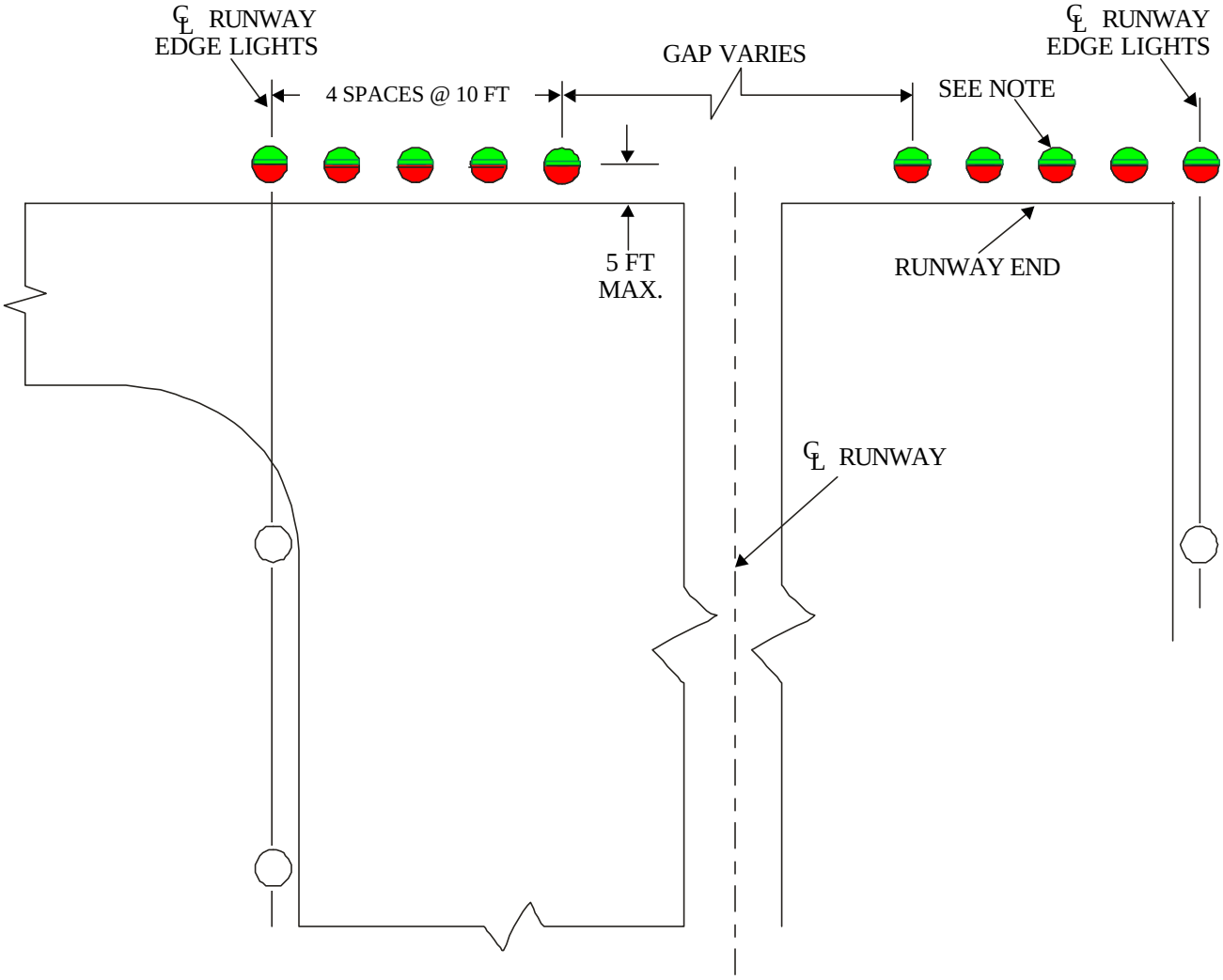

LEGEND:

RUNWAY EDGE LIGHTS, WHITE

G/R UNIDIRECTIONAL RED EXCEPT THAT WHERE COLLOCATED WITH THRESHOLD LIGHTS, THEY ARE BIDIRECTIONAL RED/GREEN

NOTE: WHERE RUNWAY END LIGHTS ARE COLLOCATED WITH THRESHOLD LIGHTS, THEY MAY BE COMBINED IN BIDIRECTIONAL RED/GREEN FIXTURES. IF MORE THAN 10 END LIGHTS ARE INSTALLED THE BALANCE SHALL BE UNIDIRECTIONAL GREEN.

Figure 1. Typical plan of runway end lights with threshold lights

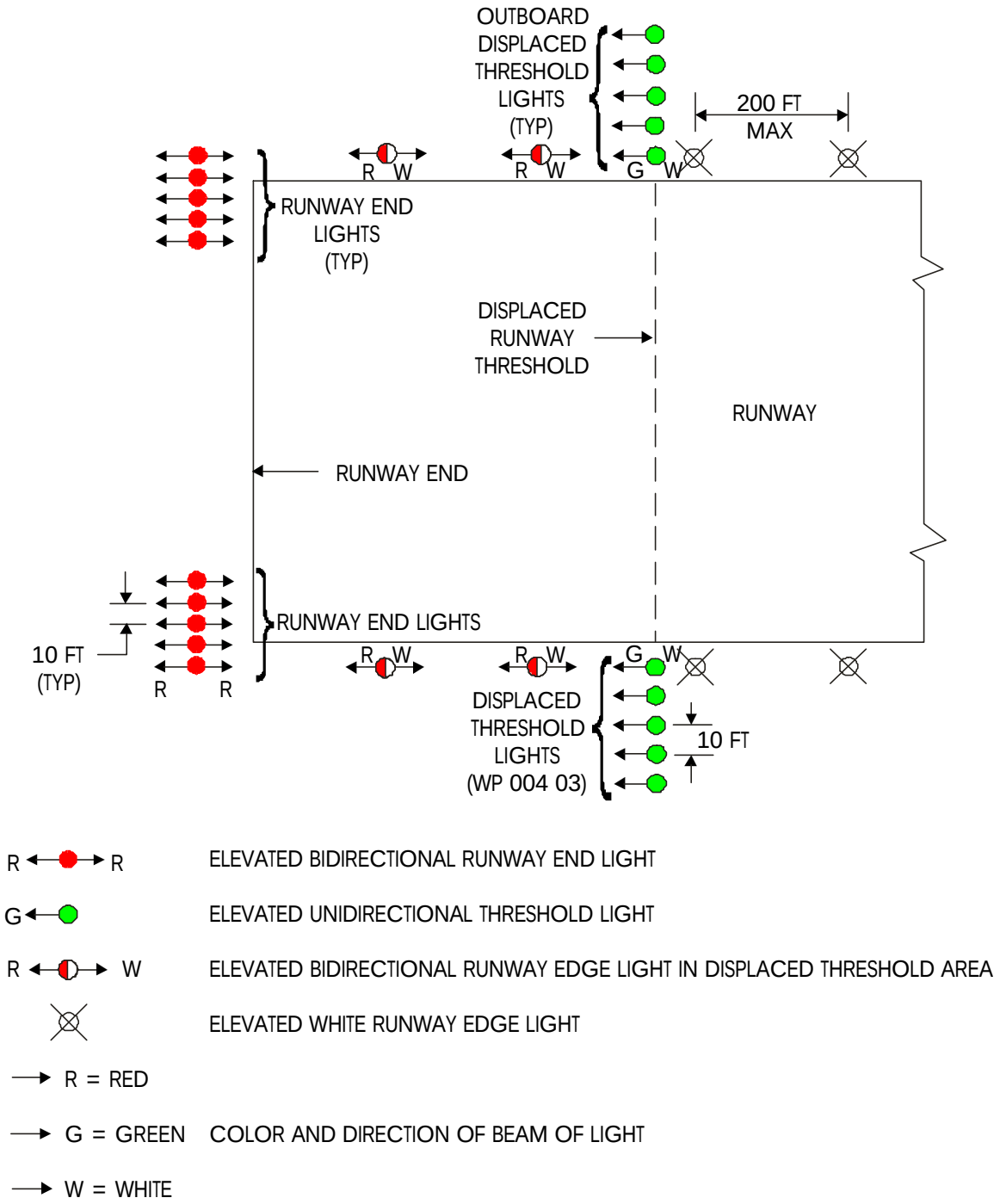

Figure 2. Typical plan of runway end lights for displaced thresholds

TABLE 1. SCHEDULE OF LIGHTING EQUIPMENT FOR RUNWAY END LIGHTS

Purpose Type of Fixture	Lamp Rating and Type	Isolation Transformer Rating	Isolation Transformer FAA Type[1/] AC150/5345-47
For basic runway end lights. 10 elevated lights at each runway end.			
MIL-L-26990[2/] Type MB-1	503W 20A, 20A/T20/3P	500W 20/20A or 500W 6.6/20A	L-830-13 L-830-12
Semiflush Lights, optional.			
FAA AC 150/ 5345-46 Type L-850D	175W or 200W 6.6A, as determined by manufacturer	200W, 20/6.6A or 200W 6.6/6.6A	L-830-7 L-830-6

Existing installations may have MIL-L-5904 Type C-1 elevated lights.

[1/] Either Military or FAA types may be used, but a single type for each installation is preferred.

[2/] The type MB-1 lights require red filters for runway end lights and green filters for threshold lights. Displaced threshold areas, red filters in both directions.

isolation transformers for these lights shall have the primary windings connected in series with the primary circuit for the HIRL.

10. DIMENSIONS.

(See figure 1.) The runway end lights at each end of the runway shall be located in a line perpendicular ±2 degrees to the extended runway centerline and shall be not more than 5 feet beyond the runway end. Individual lights may have a tolerance of two inches from the line of lights. The outermost light of each group shall be in line with the runway edge lights, and the lights shall be equally spaced not more than 10 feet apart toward the runway centerline. The height of the elevated lights shall be not more than 14 inches above the runway surface. The semiflush lights shall be installed with the top surface of the flange of the base level and at the correct depth below the pavement surface. All lights shall be level ±1 degree and oriented horizontally ±2 degrees. Elevated lights shall have the beams toed-in towards the runway centerline, but semiflush lights shall have the axes of the beams parallel to the runway centerline.

11. EQUIPMENT.

The lighting equipment for the basic runway end lights shall be as given in table 1 and typical figures are shown in figures 3 and 4.

12. PHOTOMETRIC REQUIREMENTS.

The runway end lights shall be unidirectional lights except they may be bidirectional at the rollout end of a displaced threshold or as combination threshold and end lights. The axes of the beams for unidirectional lights shall be directed down the runway parallel to the runway centerline in azimuth. Bidirectional lights may have the beams toed-in towards the runway centerline at not more than 4.5 degrees. The color of the emitted light shall be aviation red in accordance with ICAO, Annex 14, Vol. 1, App. 1. The intensity of these lights shall be progressively variable in five steps of 100, 20, 4, 0.8, and 0.2 percent of rated intensity. The intensity-beamspread of these lights at rated current shall be a shown in ~~figure 5~~**the appropriate FAA AC for the specific fixture**. The average intensity of the main beam shall be the arithmetic mean of all points inside contour I on a uniform grid with points not more than one degree apart for each coordinate axis of the grid.

LIGHT: ELEVATED RUNWAY END/THRESHOLD
MIL-L-26990 TYPE MB-1

LAMP: 503W, 20A, TYPE 20A/T20/3

FILTER: RED 180 RUNWAY END LIGHT AND
GREEN 180 THRESHOLD LIGHT. TYPE AS
DETERMINED BY MANUFACTURER.

ISOLATION TRANSFORMER: 500W 20/20A,
FAA AC 150/5345-47 TYPE L-830-13.
IF FOR 6.6A PRIMARY CIRCUIT, 500W 6.6/20A,
FAA AC 150/5345-47 TYPE L-830-12

USE FRANGIBLE COUPLING. MAY BE
MOUNTED ON LIGHT BASE OR CONDUIT.

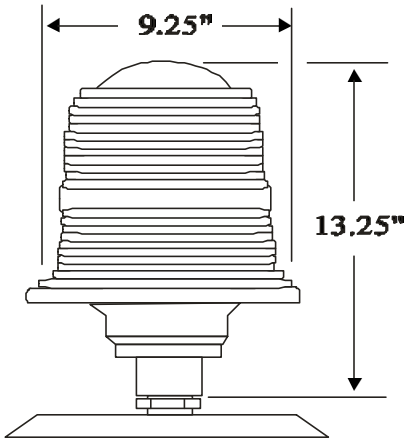

DIMENSIONS ARE FOR REFERENCE ONLY

Figure 3. Elevated type MB-1 runway end threshold light

**LIGHT: SEMIFLUSH RUNWAY END/THRESHOLD
FAA AC 150/5345-46 TYPE L-850D**

**LAMP: TWO 175W TO 200W 6.6A. TYPE AS
DETERMINED BY MANUFACTURER**

**FILTER: 180º RED 180º GREEN. TYPE AS
DETERMINED BY MANUFACTURER.**

**ISOLATION TRANSFORMER: TWO 200W 20/20A.
FAA AC 150/5345-47 TYPE L-830-7,
IF FOR 6.6A PRIMARY CIRCUIT, TWO 200W
6.6/6.6A, FAA AC 150/5345-47 TYPE L-830-6**

**BASE: 15-INCH DIAMETER, FAA AC 150/5345-42
TYPE L-868 SIZE C**

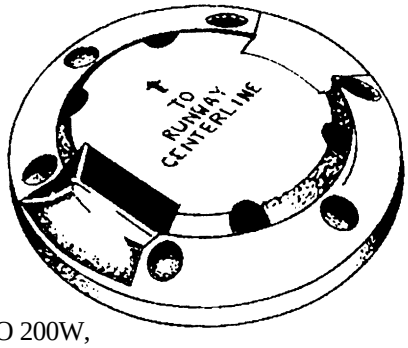

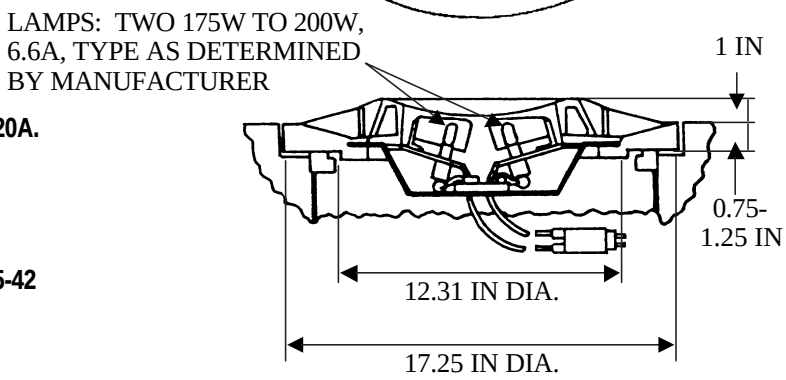

DIMENSIONS ARE FOR REFERENCE ONLY

Figure 4. Semiflush type FAA L-850D runway end/threshold light

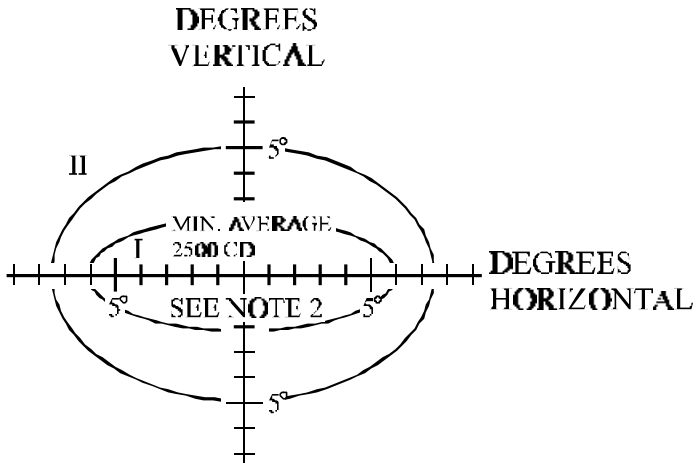

RUNWAY END LIGHT, RED

	I–50%	II–10%
a	6.0°	7.5°
b	2.25°	5.0°

NOTES:

1. ALL CONTOURS ARE ELLIPSES CALCULATED BY EQUATION $\frac{X^2}{a^2} + \frac{Y^2}{b^2} - 1$
2. THE MINIMUM AVERAGE INTENSITY OF THE MAIN BEAM (INSIDE CONTOUR I) IS 2,500 CD, AVIATION RED. MAXIMUM INTENSITY SHOULD NOT EXCEED 1.5 TIMES ACTUAL AVERAGE INTENSITY.
3. MINIMUM INTENSITY OF I 50% AND II 10% OF REQUIRED MAIN BEAM INTENSITY.

~~Figure 5. Intensity distribution requirements of runway end lights~~

13. POWER AND CONTROLS.

14. POWER.

The runway end lights are a part of the HIRL series circuit. The power shall be provided by one or more series circuits with a constant-current regulator for each circuit. If two or more circuits are used and the runway edge lights are interleaved the end light circuits shall be interleaved to provide a usable system if one circuit fails. The constant-current regulator shall have adequate capacity for the runway end and threshold lights in addition to its load of HIRL or approach lights. The runway end lights shall have the same emergency power source and automatic transfer requirements (WP009 01) as the HIRL or approach lights.

15. CONTROLS.

The runway end lights (a part of the HIRL or approach lights) will not have separate power and intensity controls. Both remote control (WP009 00) in the control tower and local control in the lighting vault shall be as for the HIRL and approach lighting.

TECHNICAL MANUAL

HIGH-INTENSITY RUNWAY EDGE LIGHTS (HIRL)

SHOREBASED AIRFIELDS

Reference Material

Introduction 002 00
~~Definitive Designs for Naval Shore Facilities ..... NAVFAC P-272~~
Runway Markings 004 01
Runway Threshold Lighting 004 02
Displaced Threshold Lights and Markings 004 03
Runway End Lights 004 04
Runway Centerline Lights (RCL) 004 06
Touchdown Zone Lights (TDZL) 004 07
Electrical Power and Control for Visual Aids 009 00
Auxiliary Power and Power Transfer Equipment 009 01
Constant-Current Regulators 009 02
Design Drawings for Visual Air Navigation Facilities ..... UFC 3-535-02
~~Airfield Lighting ..... MIL-HDBK-1023/1~~
Light, Runway Marker, Elevated, Type C-1 ..... MIL-L-5904
Base and Accessories, Airport Marker Light MIL-B-8954
Aeronautical Ground Light and Surface Marking Colors ..... ICAO, Annex 14, Vol. 1, App. 1
Light, Marker, Airport, Semiflush, General Specifications for MIL-L-26202
Light, Marker, Airport Approach, High Intensity, Type MB-1 ..... MIL-L-26990
Specification for Airport Light Base and Transformer Housings ..... FAA AC 150/5345-42
Specification for Runway and Taxiway Light Fixtures ..... FAA AC 150/5345-46
Isolation Transformers for Airport Lighting ..... FAA AC 150/5345-47

Alphabetical Index

Subject **Page No.**

Aiming 6
Constant-Current Regulators 7
Controls 8
Description 2
Dimensions 6
Displaced Thresholds 2
Emergency Power 7
Equipment 6
Existing Installations 2
General Information. 2
Installation Requirements 2
Installations 2
Intensity Control 6
Interleaving 7
Justification Requirements. 2
Methods Of Installation. 2
Photometric Requirements. 6
Power. 7

Power And Controls..... 7
Purpose. 2
Regulators 7
Related Facilities..... 2
Schedule Of Lighting Equipment For HIRL 7
Tolerances..... 6

Record of Applicable Technical Directives

None

1. GENERAL INFORMATION.

2. PURPOSE.

This Work Package (WP) contains the requirements for the High-Intensity Runway Edge Lights (HIRL). The HIRL defines the lateral limits of the usable runway surface for landings and takeoffs during all nighttime operations and in reduced visibility. These HIRL requirements shall be used for all new runway edge lighting installations and should be considered for replacement or improvements of existing runway edge lighting systems.

3. JUSTIFICATION REQUIREMENTS.

The HIRL is a basic airfield lighting system. With its associated threshold lighting and runway end lighting, it can function without other lighting support. All runways intended for use at night or during Instrument Flight Rules (IFR) operations (WP002 00) shall be provided with HIRL. Existing medium-intensity runway edge lighting installations may continue to be used only for nighttime Visual Flight Rules (VFR) operations. Any variations from these requirements shall be approved in accordance with the procedures of WP002 00.

4. RELATED FACILITIES.

In addition to the HIRL, related visual aid facilities should include the following:

a. Runway threshold lights (WP004 02),

b. Runway end lights (WP004 04),

c. Runway markings (WP004 01).

For some runways these visual aids may be installed.

d. Displaced threshold lights and marking (WP004 03),

~~b.~~**e.** Runway centerline lights (RCL) (WP004 06), and

~~c.~~**f.** Touchdown zone lights (TDZL) (WP004 07).

5. DESCRIPTION.

6. The HIRL shall consist of two straight lines of high-intensity lights with one line of lights located along each edge of the runway (see figure 1). The lights shall be equally spaced along the edge of the runway, bidirectional, and the emitted color shall be aviation white. **On instrument approach runways, the last 2000 ft of the runway shall havve bidirectional yellow/white lights installed with yellow facing the take-off aircraft.** The HIRL shall use elevated lights except semiflush lights shall be used in intersections with taxiways, other runways, or in the area of the arresting gear tape sweep. For both types of lights, the axes of the beams shall be toed-in toward the runway centerline. For runways with displaced thresholds, the HIRL shall be installed at the edges of the displaced area if this area is used for rollouts or takeoffs. For HIRL in the displaced threshold area the color of the emitted light towards the approach zone shall be aviation red.

7. INSTALLATIONS.

8. INSTALLATION REQUIREMENTS.

For installation details of the HIRL system refer to ~~MIL-HDBK-1023/1 and NAVFAC P-272~~**UFC 3-535-02**. General equipment design and installation requirements are given below.

9. METHODS OF INSTALLATION.

The semiflush lights (figure 2) shall be installed on lights bases. The elevated lights (figure 3 and 4) may be mounted on lights bases or on conduit in concrete foundations. All elevated lights shall be mounted on frangible couplings. The line of lights shall be in the runway shoulders i**f**~~n~~ the shoulders are stabilized. If the shoulders are not stabilized, the lines of lights may be located inboard of the runway edge. With the lights inboard of the runway edges, the handholes and light foundations will not be a hazard to aircraft if the wheels should run off the runway.

NOTES:

1. ELEVATED HIRL LIGHTS ARE CONSIDERED BIDIRECTIONAL EVEN THOUGH THEY HAVE AN OMNIDIRECTIONAL COMPONENT.

2. LIGHTS SHALL LINE UP ON OPPOSITE SIDES OF RUNWAY.

LEGEND:

W/Y WHITE/YELLOW LAST 2000 FT INSTRUMENT RUNWAY ONLY

BIDIRECTIONAL WHITE

SEMIFLUSH FIXTURE BIDIRECTIONAL

"A" EQUAL SPACING 200 FT MAX.± 1 FT

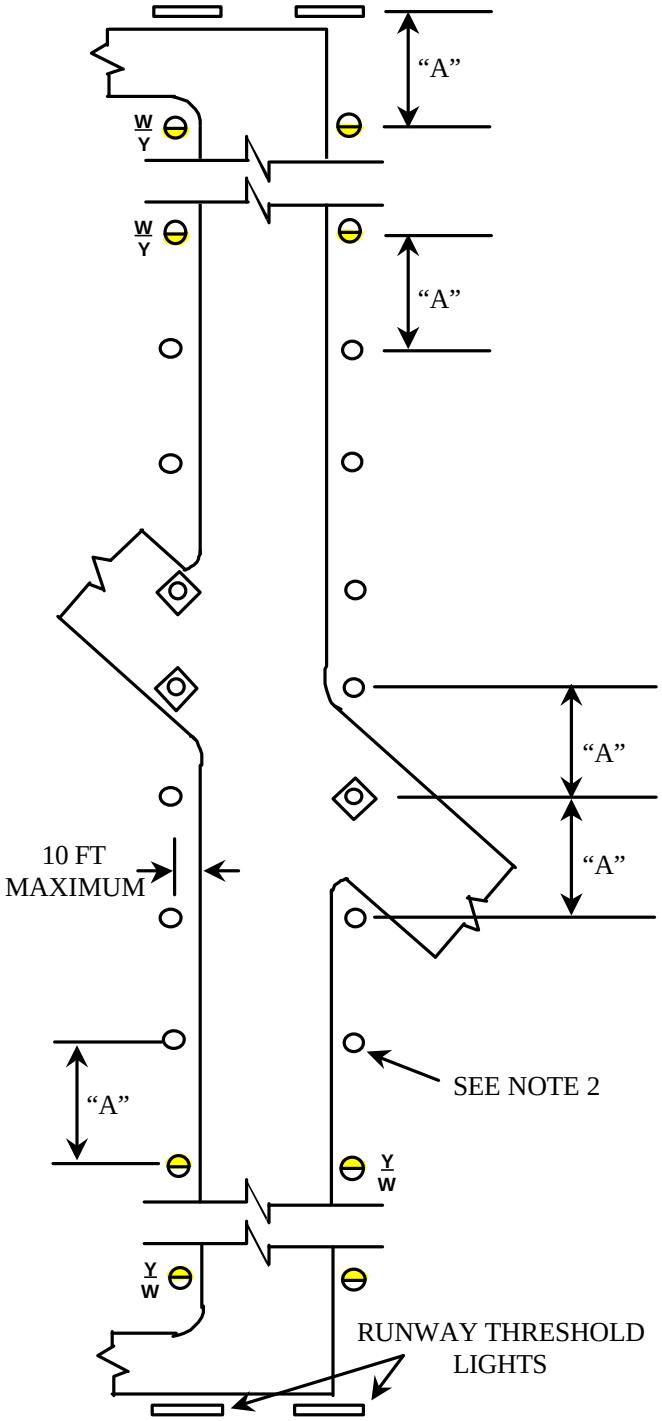

Figure 1. Typical plan for installation of high-intensity runway edge lights (HIRL)

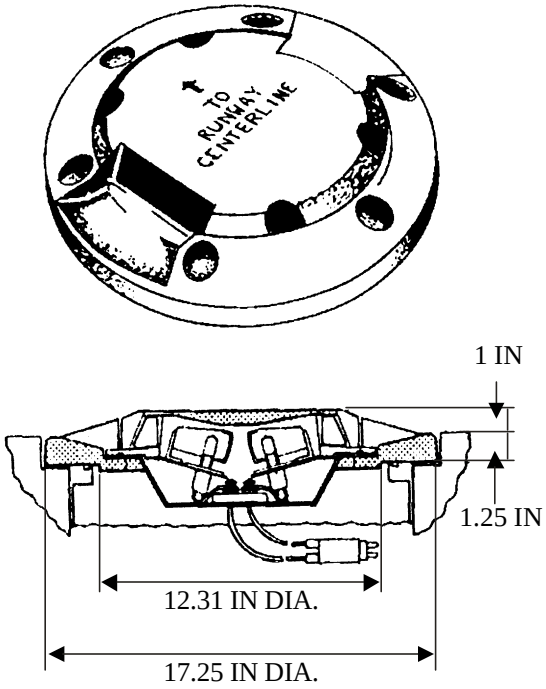

DIMENSIONS ARE FOR REFERENCE ONLY

LIGHT: SEMIFLUSH HIRL
FAA AC 150/5345-46 TYPE L-850C

LAMP: TWO 150W TO 185W 6.6A, TYPE AS SPECIFIED BY MANUFACTURER

ISOLATION TRANSFORMER: TWO 200W 20/6.6A, FAA AC 150/5345-47 TYPE L-830-7.
IF FOR 6.6A PRIMARY CIRCUIT, TWO 200W 6.6/6.6A, FAA AC 150/5345-47 TYPE L-830-6

BASE: 15-INCH DIAMETER, FAA AC 150/5345-42 TYPE L-868 SIZE C

FOR TWO 150W LAMPS, ONE 300W 20/6.6A FAA AC 150/5345-47 TYPE L-830-11 OR ONE 300W 6.6/6.6A FAA AC 150/5345-47 TYPE L-830-10.

Figure 2. Typical semiflush HIRL L-850C

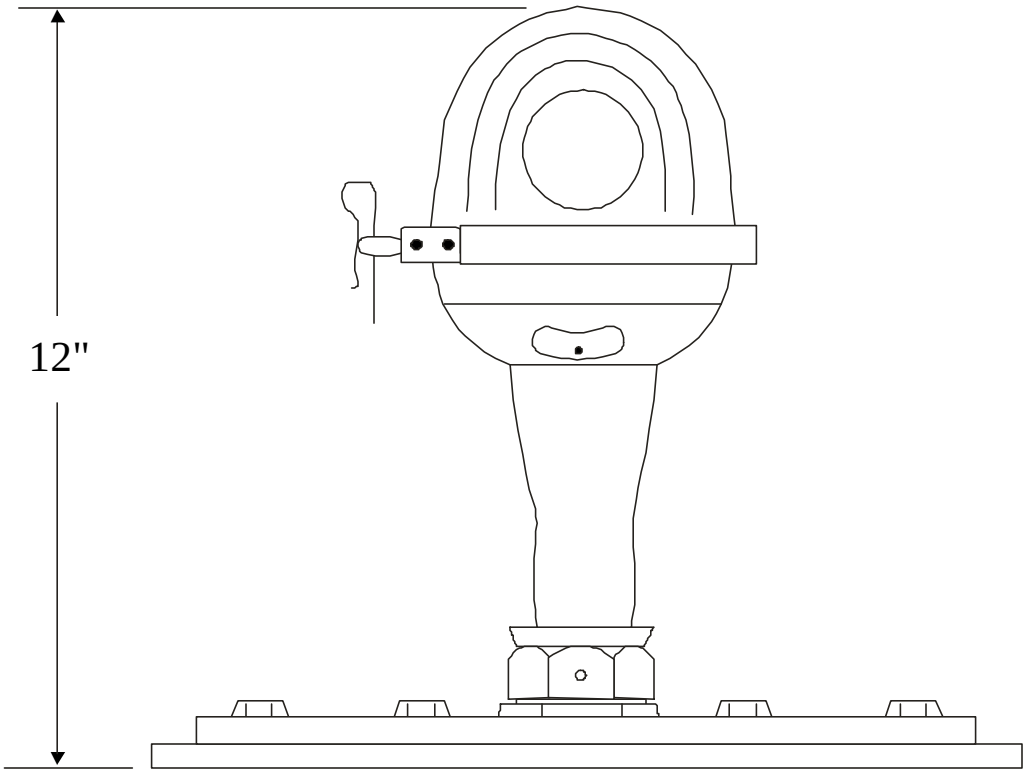

LIGHT: TYPICAL ELEVATED HIRL
FAA AC 150/5345-46
TYPE L-862

LAMP: 250W TO 209W 6.6A TYPE AS SPECIFIED BY MANUFACTURER

ISOLATION TRANSFORMER:
FAA AC 150/5345-47 TYPE L-830-7

OR

FAA AC 150/5345-47 TYPE L-830-6

MAY BE MOUNTED ON LIGHT BASE OR CONDUIT. USE FRANGIBLE COUPLING.

Figure 3. Typical elevated HIRL, for runways 200 feet wide or less

LIGHT: ELEVATED HIRL MIL-L-26990 TYPE MB-1

LAMP: 503W, 20A, TYPE 20A/T20/3

ISOLATION TRANSFORMER: 500W 20/20A,
FAA AC 150/5345-47 TYPE L-830-13.
IF FOR 6.6A PRIMARY CIRCUIT, 500W 6.6/20A,
FAA AC 150/5345-47 TYPE L-830-12

MAY BE MOUNTED ON LIGHT BASE OR CONDUIT.

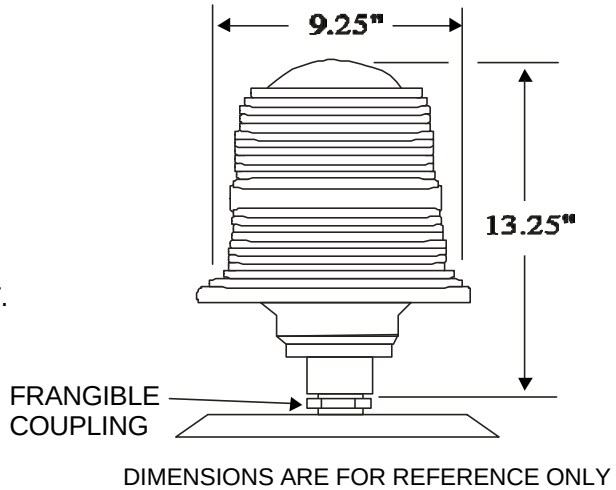

Figure 4. Typical elevated HIRL type MB-1, for runways over 200 feet in width

10. DIMENSIONS.

(See figure 1.) The HIRL shall be in straight lines along each edge of the runway parallel to and equidistant from the runway centerline. The lateral tolerance of individual lights from the line of lights shall be ±2 inches. The lights shall be equally spaced at not more than 200 feet ±12 inches along the line of lights between the lines of threshold lights at each end of the runway. At runway and taxiway intersections, the spacing of lights shall be maintained, but in the traffic areas semiflush lights shall be used. The line of lights shall be not more than ~~15~~ **10** feet from the nominal full strength edge of the runway. The lights on the opposite sides of the runway shall be in a line perpendicular to the runway centerline within 0.5 degree. The elevated lights shall be mounted on frangible couplings and the height shall be not more than 14 inches above the runway surface, except in areas with frequent occurrences of snow accumulation to depths of 12 inches or more where, with approval by Naval Air Systems Command, the maximum height may not exceed 24 inches. The lights shall be leveled and oriented so the axes of the beams are toed-in equally in each direction. For semiflush lights the top of the flange of the light base shall be level and at the depth below the runway required by the manufacturer of the fixture. For both types of lights the orienting tolerance is one degree. The vertical aiming is fixed but the limits must be level.

11. EQUIPMENT.

The lighting equipment for the HIRL shall be as given in table 1. Figures 2, 3 and 4 show typical fixtures.

12. PHOTOMETRIC REQUIREMENTS.

The runway end lights shall be bidirectional lights. The lights shall be aligned with the axes of the beams toed-in towards the runway centerline between 3.5 and 4.5 degrees in azimuth. The elevation angle is fixed and is correct when the fixture is level. The color of the emitted light shall be aviation white in accordance with ICAO, Annex 14, Vol. 1, App. 1. The intensity of these lights shall be progressively variable in five steps of 100, 20, 4, 0.8, and 0.2 percent of rated intensity. The intensity beamspread of these lights at rated current shall be a shown in ~~figure 5~~**the appropriate FAA AC for the specific fixture**. The average intensity of the main beam shall be the arithmetic mean of all points inside contour I on a uniform grid with points not more than one degree apart for each coordinate axis of the grid.

TABLE 1. SCHEDULE OF LIGHTING EQUIPMENT FOR HIRL

Purpose Type of Fixture	Lamp Rating and Type	Isolation Transformer Rating	Isolation Transformer FAA Type AC150/5345-47
Elevated, Runways 200 feet or less width.			
~~MIL-L-5904~~ ~~Type C-1~~ ~~or~~	~~204W 6.6A~~ ~~6.6A/T14/2P~~	~~200W 20/6.6A or~~ ~~200W 6.6/6.6A~~	~~L-830-7~~ ~~L-830-6~~
FAA AC 150/ 5345-46, Type L-862	150W to 209W 6.6A, as determined by manufacturer.	200W 20/6.6A or 200W 6.6/6.6A	L-830-7 L-830-6
Elevated, Runways more than 200 feet in width.			
MIL-L-26990 Type MB-1	503W 20A 20A/T20/3	500W 20/20A or 500W 6.6/20A	L-830-13 L-830-12
Semiflush, All runways..			
MIL-L-26202 Class B-15 or	499W 20A, Q20A/PAR56/3	500W 20/20A or 500W 6.6/20A	L-830-13 L-830-12
FAA AC 150/ 5345-46 Type L-850C	Two 150W to 185W, 6.6A, as determined by manufacturer.	Two 200W 20/6.6A or 200W 6.6/20A, or for two 150W lamps, one 300W 20/6.6A or one 6.6/6.6A	L-830-7 L-830-6 L-830-11 L-830-10

[1/] Number of lights required varies with runway length.

13. POWER AND CONTROLS.

14. POWER.

The power for the HIRL shall be provided by one or more 20-ampere series circuits using one or more constant-current regulators. Existing installations may be 6.6 -ampere series circuits. If two or more circuits are used, the circuits may be interleaved to provide a usable system if one circuit should fail. Interleaving shall include both the runway threshold and end lights. The runway threshold lights and runway end lights shall be powered by the same series circuits as the HIRL. The constant-current regulators shall provide 20 amperes output with 5-step intensity control as discussed in WP009 02. The power sources for the HIRL should include an auxiliary power source with arrangement for automatic transfer of power (WP009 01). The transfer time shall be not more than one second for Category II and Category III operations, not more than 15 seconds if only for Category I operations, or not more than 30 seconds for non-precision approach runways. The one second transfer time may be provided by using the secondary or auxiliary source as operating power during Category II and Category III conditions and transferring to the primary power source if the secondary power malfunctions.

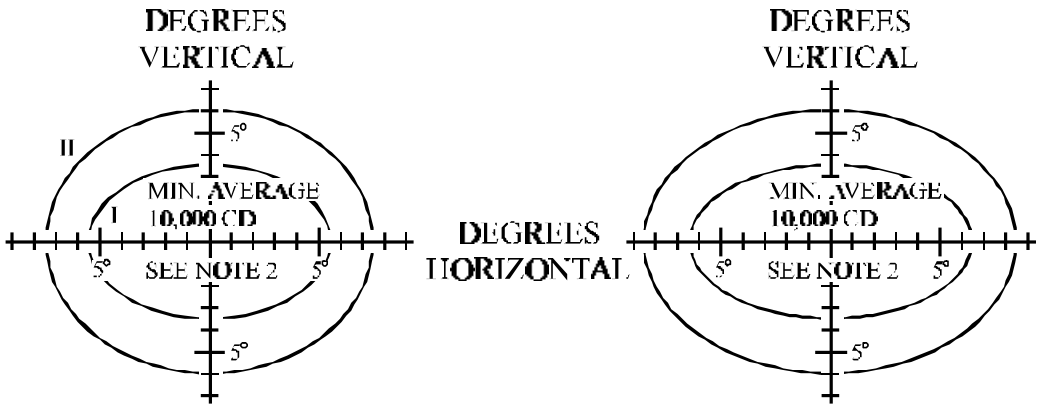

A. EDGE LIGHTS FOR RUNWAYS LESS THAN 200 FT WIDE

B. EDGE LIGHTS FOR RUNWAYS 200 FT OR MORE WIDE

	I=50%	II=10%
a	5.5°	7.5°
b	3.5°	6.0°

	I=50%	II=10%
a	6.5°	8.5°
b	3.5°	6.0°

NOTES:

1. ALL CONTOURS ARE ELLIPSES CALCULATED BY EQUATION $\frac{X^2}{a^2} + \frac{Y^2}{b^2} = 1$
2. THE MINIMUM AVERAGE INTENSITY OF THE MAIN BEAM (INSIDE CONTOUR I) IS 10,000 CD, AVIATION WHITE. MAXIMUM INTENSITY SHOULD NOT EXCEED 1.5 TIMES ACTUAL AVERAGE INTENSITY.
3. MINIMUM INTENSITY OF I 50% AND II 10% OF REQUIRED MAIN BEAM INTENSITY.

~~Figure 5. Intensity distribution requirements of HIRL~~

15. CONTROLS.

(See WP009 00.) The HIRL shall be provided with power and intensity control separate from the other lighting systems. Other lighting systems may be interconnected to operate only when the HIRL are operating. These lights shall be controlled from the air traffic control tower. Local control for maintenance and emergency operations shall be from the airfield lighting vault. The intensity controls for HIRL shall have five steps at levels of approximately 100, 20, 4, 0.8, and 0.2 percent of the rated intensity at rated current.

TECHNICAL MANUAL

RUNWAY CENTERLINE LIGHTS (RCL)

SHOREBASED AIRFIELDS

Reference Material

Introduction 002 00
~~Definitive Designs for Naval Shorebased Facilities ..... NAVFAC P-272~~
Approach Visual Aids 003 00
Approach Lights Category II and Category III - ALSF-2 ..... 003 07
Runway Markings 004 01
Runway Threshold Lighting 004 02
Displaced Threshold Lights and Markings 004 03
Runway End Light 004 04
High-Intensity Runway Edge Lights (HIRL) 004 05
Touchdown Zone Lights (TDZL) 004 07
Electrical Power and Control for Visual Aids 009 00
Auxiliary Power and Power Transfer Equipment 009 01
Constant-Current Regulators 009 02
Design Drawings for Visual Air Navigation Facilities ..... UFC 3-535-02
~~Airfield Lighting ..... MIL-HDBK-1023/1~~
Aeronautical Ground Light and Surface Marking Colors ..... ICAO, Annex 14, Vol. 1, App. 1
Specification for Airport Light Base and Transformer Housing ..... FAA AC 150/5345-42
Specification for Runway and Taxiway Light Fixtures ..... FAA AC 150/5345-46
Isolation Transformers for Airport Lighting ..... FAA AC 150/5345-47

Alphabetical Index

Subject **Page No.**

Aiming 4
Arresting-Hook Resistant Lights 4
Base Mounted Installations 4
Color Coding for Runway Distance Remaining 4
Control. 7
Description 4
Dimensions 4
Direct Mounted Installation 4
Displaced Threshold 2
Equipment 4
Existing Installations 2
General Information. 2
Installation Requirements 4
Installations 4
Intensity Control 6
Interleaving 6
Justification Requirements. 2
Methods Of Installation. 4
Photometric Requirements. 4

Power. 6
Power And Controls 6
Purpose. 2
Related Facilities 2
Schedule Of Lighting Equipment For RCL 7
Shorting Devices 6
Tolerances 4
Types Of Installation 4

Record of Applicable Technical Directives

None

1. GENERAL INFORMATION.

2. PURPOSE.

This Work Package (WP) contains the requirements for the Runway Centerline Lights (RCL). The RCL identifies the center of the runway and provides longitudinal alignment during landings, rollouts and takeoffs at night and under reduced visibility weather conditions. They also indicate by color coding the distance remaining to the end of the runway. The RCL together with the High-Intensity Runway Edge Lights (HIRL) give texture to the runway at night and aid in reducing confusion caused by landing into "the black hole" between the runway edge lights. These requirements apply for new installations and should be considered for replacement or improvement of existing RCL installations.

3. JUSTIFICATION REQUIREMENTS.

Runways intended for operations in Category II and Category III meteorological conditions require RCL (see WP002 00 and WP003 00). RCL installations may be approved for runways that are planned to be upgraded to Category II runways. Runways that are authorized only for Category I operations may be approved (WP002 00) for RCL if the minimums are less than 2400 feet Runway Visual Range (RVR) or if the runway width is more than 200 feet. Instrument Flight Rules (IFR) apply for operations in these conditions.

4. RELATED FACILITIES.

In addition to the RCL, facilities for operations in Category II and Category III conditions shall include the following:

a. The runway shall be paved and not less than 150 feet wide and 6000 feet long.

b. The runway approach shall be equipped with an ALSF-2 approach light system (WP003 07) and with one of the following precision electronic approach aids:

(1) Precision Approach Radar (PAR),

(2) Precision Instrument Landing System (ILS), or

(3) Microwave Landing System (MLS).

c. The runway shall be equipped with the following:

(1) Precision Approach Runway Markings (WP004 01),

(2) Touchdown Zone Lights (TDZL) (WP004 07),

(3) High-Intensity Runway Edge Lights (HIRL) (WP004 05),

(4) High-Intensity threshold lights (WP004 02), or displaced threshold lights (WP004 03),

(5) Runway end lights (WP004 04).

d. The runway shall have a Runway Visual Range (RVR) system. For Category III operations more than one RVR system will be required.

e. Air traffic control during normal operating hours shall be provided.

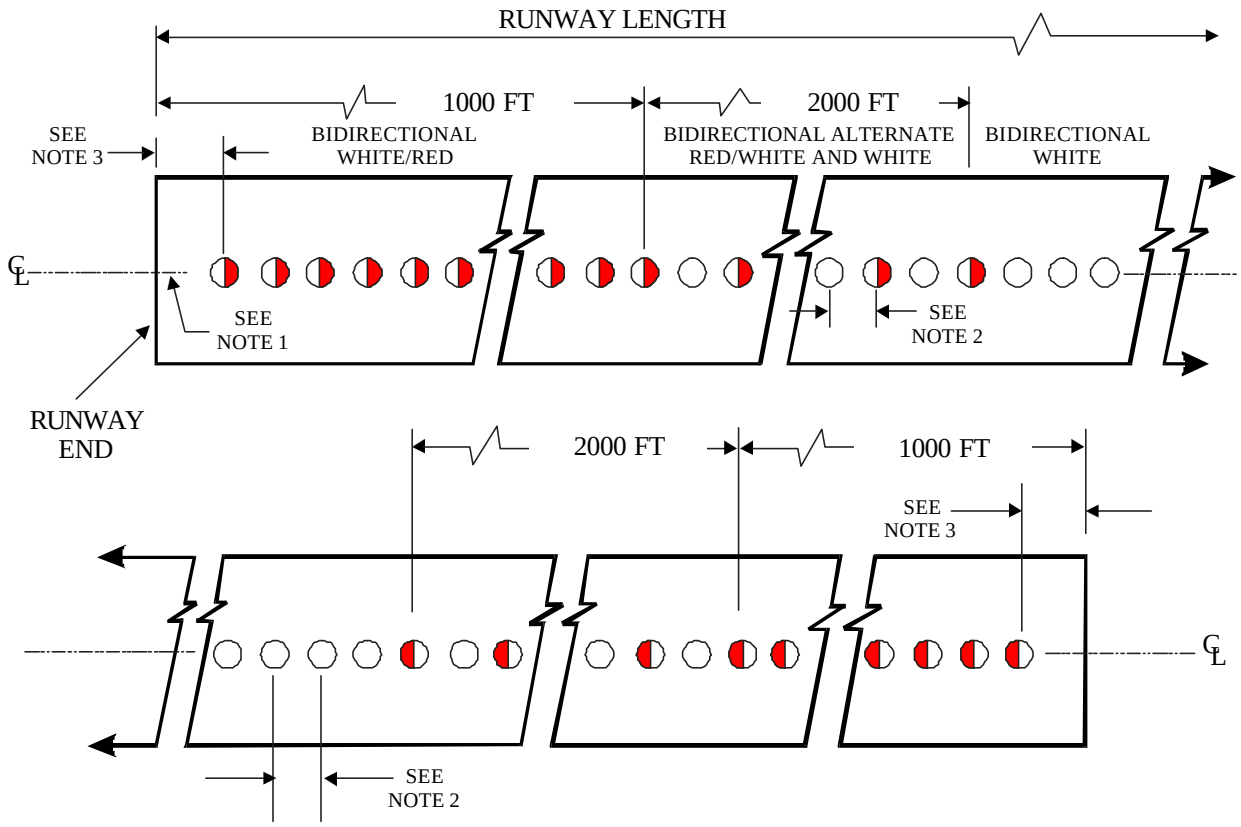

NOTES:

1. THE RCL LINE MAY BE OFFSET NOT MORE THAN 2 FT RIGHT OR LEFT OF THE RUNWAY CENTERLINE. THE LATERAL TOLERANCE FROM THE LINE OF LIGHTS + 1 IN.

2. THE RCL SHALL BE EQUALLY SPACED AT 25 FT FOR TYPE L-852N LIGHTS, AND AT 50 FT FOR FAA TYPE L-850A LIGHTS. THE LONGITUDINAL TOLERANCE IS + 2 FT.

3. THE FIRST LIGHT FROM EITHER END OF THE RUNWAY SHALL BE FOR TYPE L-852N LIGHTS NOT LESS THAN 12.5 FT AND NOT MORE THAN 25 FT, AND FOR FAA TYPE L-850A LIGHTS NOT LESS THAN 50 FT AND NOT MORE THAN 87.5 FT.

LEGEND:

○ BIDIRECTIONAL RCL - WHITE BOTH DIRECTIONS

◐ BIDIRECTIONAL RCL - RED IN DIRECTION OF SHADED SIDE, WHITE IN DIRECTION OF WHITE SIDE

Figure 1. Plan for installation of runway centerline lights (RCL)

5. DESCRIPTION.

6. The RCL shall consist of a row of single, semiflush, bidirectional lights located along the runway centerline (see figure 1). The RCL shall extend from the threshold to the runway end. If the runway has a displaced threshold, the RCL shall extend through this area to the runway end. The beams from the RCL lights in the displaced threshold approach area toward the approach zone shall be blanked out. The lights from the runway threshold to the last light before 3000 feet from the runway end shall be aviation white. The lights in the last 3000 feet of runway shall be color coded for runway distance remaining. The lights in the section from 3000 feet from the runway end to the last light before 1000 feet from the runway end shall be alternate red and white. All lights in the final 1000 feet of the runway shall be red. The color code is similar for landings from either direction.

7. INSTALLATIONS.

8. INSTALLATION REQUIREMENTS.

For installation details for the runway centerline lights (RCL), refer to ~~MIL-HDBK-1023/1 and NAVFAC P-272~~**UFC 3-535-02**. General design and installation requirements are given below.

9. TYPES OF INSTALLATION.

There are two types of RCL installations as follows:

a. For runways that have a large percentage of the landings by aircraft equipped with arresting hooks, the RCL fixtures should be resistant to arresting hook damage (figure 2). Fixtures available with this strength use 65W lamps and have lower intensities. The spacing for these type lights shall be 25-foot intervals.

b. For runways that have a small percentage of the landings by aircraft with arresting hooks, the RCL fixtures should be a larger, higher-intensity type (figure 3). The RCL spacings for these type lights shall be 50-foot intervals.

10. METHODS OF INSTALLATION.

Two methods for installing the RCL fixtures are:

a. The base mounted method, which is preferred for runways with new pavement, has the light fixtures mounted on deep type marker light bases.

b. The direct mounted method, which is used for existing paved runways, has the light fixtures installed in holes drilled in the pavement. The wiring between the light fixture and the handhole at the runway edge is placed in saw kerfs cut in the pavement.

11. DIMENSIONS.

(See figure 1.) The RCL shall be installed in a line along or parallel to the runway centerline. The RCL line may be displaced a maximum of two feet from the runway centerline to avoid construction joints and the runway centerline markings. If the RCL will not be on the runway centerline, the preferred side for displacement is opposite that of the main exits from the runway. If an ALSF-1 or ALSF-2 Approach Light System is installed, the RCL and the approach light centerline shall be on the same line. The individual lights may have a lateral tolerance ±1 inch from the line of lights. The tolerances shown in Note 3 of figure 1 for the first lights permit the use of the standard light spacings for runways with odd lengths and to avoid special installation problems. The top surface of the mounting flange for the light base shall be level and at the correct depth below the runway surface for the fixture. The light base shall be oriented horizontally so the light beam axis will be parallel to the centerline of the runway with a tolerance of ±1 degree. The vertical aiming of these semiflush lights is fixed.

12. EQUIPMENT.

The lighting equipment for the RCL shall be as given in table 1. Typical fixtures are shown in figures 2 and 3.

13. PHOTOMETRIC REQUIREMENTS.

The runway centerline lights shall be bidirectional, in-pavement lights. The axes of the beams shall be 180 degrees apart in azimuth and aligned with the axes of the beams parallel to the runway centerline. The elevation angle of the beam axis is fixed but may vary between 2 and 5 degrees above horizontal for different types of fixtures. The color of the emitted light shall be in accordance with ICAO, Annex 14, Vol. 1, App. 1. The color of most of these lights is aviation white, but at the rollout end of the runway some of the lights are aviation red. The intensity of these lights shall be progressively variable in five steps of 100, 20, 4, 0.8, and 0.2 percent of rated intensity. The intensity-beamspread of these lights at rated current shall be shown in ~~figure 4~~**the FAA AC for the specific fixture**. The hook-resistant types of fixtures may not provide these intensities. The average intensity of the main beams shall be the arithmetic

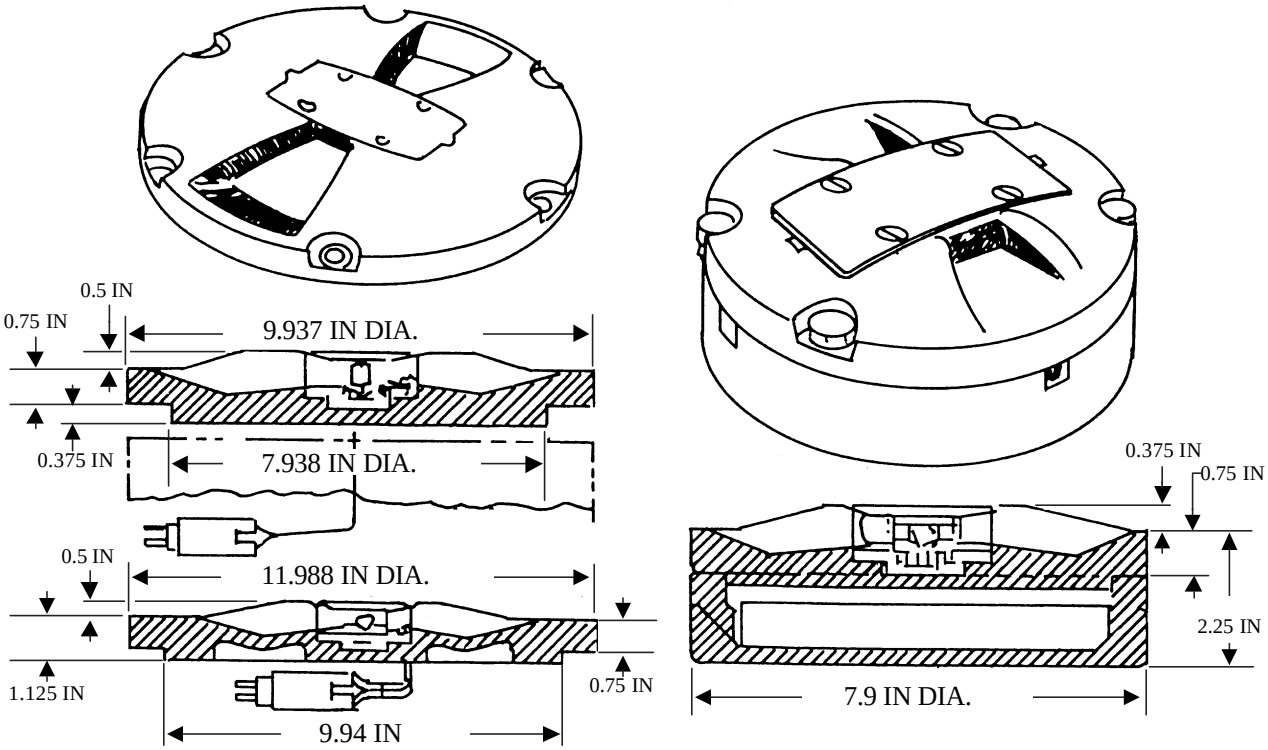

NOTE: DIMENSIONS ARE FOR REFERENCE ONLY

LIGHT, BASE-MOUNTED: TYPE L-852N NAVYLIGHT, TYPE VII OR VIII, WITH SHORTING DEVICE FOR FAILED LAMP.

LIGHT, DIRECT-MOUNTED: TYPE L-852N NAVY TYPE VI, WITH SHORTING DEVICE FOR FAILED LAMP.

LAMP: 65W 6.6A, TYPE AS DETERMINED BY MANUFACTURER.

FILTER: AVIATION RED, AS REQUIRED.

BASE: FAA AC 150/5345-42 TYPE L-858 SIZE A 10" DIA. FOR LIGHT TYPE VII OR SIZE B 12: DIA. FOR LIGHT TYPE VII.

BASE: SPECIAL SHALLOW FOR DIRECT MOUNTED LIGHTS BY MANUFACTURER.

ISOLATION TRANSFORMER: FOR THREE LIGHTS IN THE SECONDARY OF ONE TRANSFORMER. TRANSFORMER IS 20/6.6A 200W FAA AC 150/5345-47 TYPE L-830-7. FOR A TRANSFORMER FOR EACH LIGHT 20/6.6A 100W FAA AC 150/5345-47 TYPE L-830-5.

Figure 2. Typical arresting-hook resistant runway centerline lights (RCL), class L-852N Navy

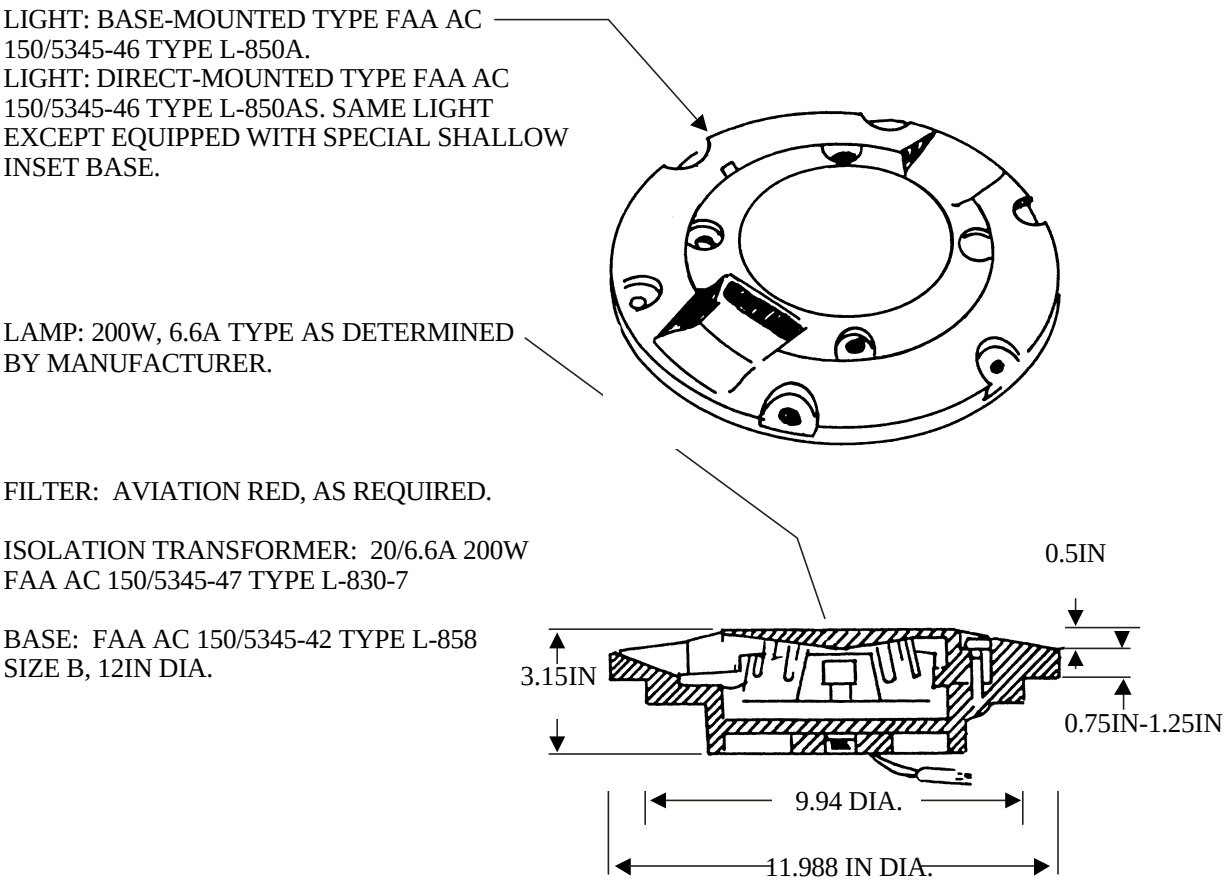

DIMENSIONS ARE FOR REFERENCE ONLY

Figure 3. Typical high-intensity runway centerline light (RCL), Type FAA L-850A

mean of all points inside Contour I on a uniform grid with points not more than one degree apart for each coordinate axis of the grid.

14. POWER AND CONTROLS.

15. POWER.

The power for the RCL shall be provided by one or more 20-ampere series circuits and one or more constant-current regulators. If more than one circuit is used, the circuits may be interleaved to provide a usable system if one circuit fails. The interleaving shall be arranged to prevent a false indication of runway distance remaining if any one circuit is inoperative. The constant-current regulators shall be rated for 20-ampere output and have 5 intensity steps. For regulator requirements refer to WP009 02. The power sources for the RCL shall include an auxiliary or secondary power source with arrangement for automatic transfer of power (WP009 01). The transfer time shall be not more than one second for Category II and Category III operations and not more than 15 seconds if only for Category I operations. The one second transfer time may be provided by operating on power from the auxiliary source during Category II and Category III conditions with transfer to the primary source in one second if the auxiliary source malfunctions. For the arresting-hook-resistant light fixtures the isolation transformers may be a 100 watt transformer for each light or a 200 watt transformer for three lights. For the latter arrangement the lights shall be provided with shorting devices to short out the lamp if a lamp fails. This shorting device prevents the other two lights from being inoperative when any one lamp fails.

TABLE 1. SCHEDULE OF LIGHTING EQUIPMENT FOR RCL[1/]

Purpose Type of Fixture	Lamp Rating and Type	Isolation Transformer Rating	Isolation Transformer FAA Type AC150/5345-47
Runway for aircraft with arresting hooks.			
Type L-852N Navy Direct Mounted Method, Type VI Base Mounted Method, Type VII or VIII	65W 6.6A, as determined by manufacturer.	(Transformer for each light) 100W 20/6.6A (Transformer for three lights)[2/] 200W 20/6.6A	L-830-5 L-830-7
Runway for aircraft without arresting hook.			
Direct Mounted Method FAA AC 150/5345-46 Type L-850AS	200W 6.6A, as determined by manufacturer.	200W 20/6.6A	L-830-7
Base Mounted Method, FAA AC 150/5345-46 Type L-850A	200W 6.6A, as determined by manufacturer.	200W 20/6.6A	L-830-7

[1/] The number of lights required varies with the length of the runway and purpose of the runway.
[2/] These lights shall be equipped with a shorting device for inoperative lamps.

16. CONTROL.

(See WP009 00.) The RCL shall be provided with power and intensity control separate from the other lighting systems. These lights shall be controlled from the air traffic control tower. Local control for maintenance and emergency operations shall be from the airfield lighting vault. The intensity of the RCL shall be one of five steps as selected at levels of approximately 100, 20, 4, 0.8, and 0.2 percent of the rated intensity.

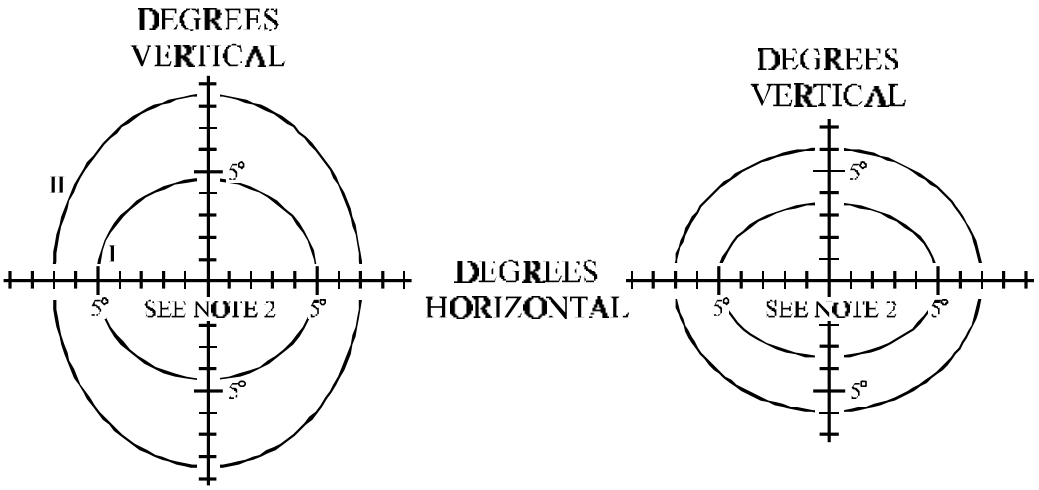

A. CENTERLINE LIGHTS, HOOK-RESISTANT, 7.5M (25FT) SPACING

B. CENTERLINE LIGHTS, HIGH-INTENSITY, 15M (50FT) SPACING

	I=50%	II=10%
a	5.0°	7.0°
b	4.5°	8.5°

	I=50%	II=10%
a	5.0°	7.0°
b	3.5°	6.0°

NOTES:

1. ALL CONTOURS ARE ELLIPSES CALCULATED BY EQUATION $\frac{X^2}{a^2} + \frac{Y^2}{b^2} = 1$
2. THE MINIMUM AVERAGE INTENSITY OF THE MAIN BEAM (INSIDE CONTOUR I) IS FOR 7.5M (25FT) SPACING, 250 CD (WHITE) AND 250 CD (RED); AND FOR 15M (50FT) SPACING 5000 CD AND 1000 CD (RED). MAXIMUM INTENSITY SHOULD NOT EXCEED 1.5 TIMES ACTUAL AVERAGE INTENSITY.
3. MINIMUM INTENSITY OF I 50% AND II 10% OF REQUIRED MAIN BEAM INTENSITY.

~~Figure 4. Intensity distribution requirements for runway centerline lights~~

TECHNICAL MANUAL

TOUCHDOWN ZONE LIGHTS (TDZL)

SHOREBASED AIRFIELDS

Reference Material

Introduction 002 00
~~Definitive Designs for Naval Shorebased Facilities ..... NAVFAC P-272~~
Approach Visual Aids 003 00
Approach Lights Category II - ALSF-2 ..... 003 07
Runway Markings 004 01
Runway Threshold Lighting 004 02
Runway End Lights 004 04
High-Intensity Runway Edge Lights (HIRL) 004 05
Runway Centerline Lights (RCL) 004 06
Electrical Power and Control for Visual Aids 009 00
Auxiliary Power and Power Transfer Equipment 009 01
Constant-Current Regulators 009 02
Design Drawings for Visual Air Navigation Facilities ..... UFC 3-535-02
~~Airfield Lighting ..... MIL-HDBK-1023/1~~
Base and Accessories, Airport Marker Lights MIL-B-8954
Aeronautical Ground Light and Surface Marking Colors ..... ICAO, Annex 14, Vol. 1, App. 1
Light Marker, Airport, Semiflush MIL-L-26202
Specification for Airport Light Base and Transformer Housing ..... FAA AC 150/5345-42
Specification for Runway and Taxiway Light Fixtures ..... FAA AC 150/5345-46
Isolation Transformers for Airport Lighting ..... FAA AC 150/5345-47

Alphabetical Index

Subject **Page No.**

Aiming 4
Base-Mounted Light Installation 4
Controls 4
Description 2
Dimensions 4
Direct-Mounted Light Installation 4
Emergency Power Source 4
Equipment 4
Existing Installations 2
General Information. 2
Installation Requirements 2
Installations 2
Intensity Control 4
Interleaving 4
Justification Requirements. 2
Methods Of Installation. 4
Photometric Requirements. 4
Power. 4

Power And Controls..... 4
Purpose. 2
Related Facilities..... 2
Schedule Of Lighting Equipment For TDZL 5
Tolerances..... 3

Record of Applicable Technical Directives

None

1. GENERAL INFORMATION.

2. PURPOSE.

This Work Package (WP) contains the requirements for the Touchdown Zone Lights (TDZL). The touchdown zone lights provide visual guidance during final approach and landing and define the portion of the runway used for touchdown. Also, they provide visual cues for more accurately centering the aircraft on the runway, adjusting attitude for touchdown, and determining the touchdown position. These requirements apply for new installations and should be considered for replacement or improvement of existing TDZL installations.

3. JUSTIFICATION REQUIREMENTS.

Runways intended for operations in Category II and Category III meteorological conditions (see WP002 00 and WP003 00) require TDZL. They may be approved for runways that are planned to be upgraded to Category II runways. Runways that are authorized for Category I operations only may be approved (WP002 00) for TDZL if the minimums are less than 2400 feet Runway Visual Range (RVR) or if the runway width is 250 feet or greater.

4. RELATED FACILITIES.

In addition to the TDZL, facilities for operations in Category II and Category III conditions shall include the following:

a. The runway shall be paved and not less than 150 feet wide and 6000 feet long.

b. The runway approach shall be equipped with an ALSF-2 approach light system (WP003 07) and shall include one of the following precision electronic approach aids:

(1) Precision Approach Radar (PAR),

(2) Precision Instrument Landing System (ILS), or

(3) Microwave Landing System (MLS).

c. The runway shall be equipped with the following:

(1) Precision Approach Runway Markings (WP004 01),

(2) Runway Centerline Lights (RCL) (WP004 06),

(3) High-Intensity Runway Edge Lights (HIRL) (WP004 05),

(4) High-Intensity threshold lights (WP004 02), and

(5) Runway end lights (WP004 04).

d. The runway shall have a Runway Visual Range (RVR) system. For Category III operations more than one RVR system will be required.

e. Air traffic control during normal operating hours shall be provided.

5. DESCRIPTION.

6. The TDZL shall consist of pairs of light barrettes, with semiflush white unidirectional light fixtures, located on each side of the runway centerline and be in a line perpendicular to and symmetrical about the centerline of the runway centerline lights (WP004 06) (see figure 1). Each light barrette shall consist of three lights spaced laterally along the line of the lights bar. Pairs of barrettes shall be spaced at 100-foot intervals for 3000 feet along the runway starting from the threshold forming two rows of barrettes.

7. INSTALLATIONS.

8. INSTALLATION REQUIREMENTS.

For installation details for the TDZL, refer to ~~MIL-HDBK-1023/1 and NAVFAC P-272~~**UFC 3-535-02**. General design and installation requirements for the TDZL are given below.

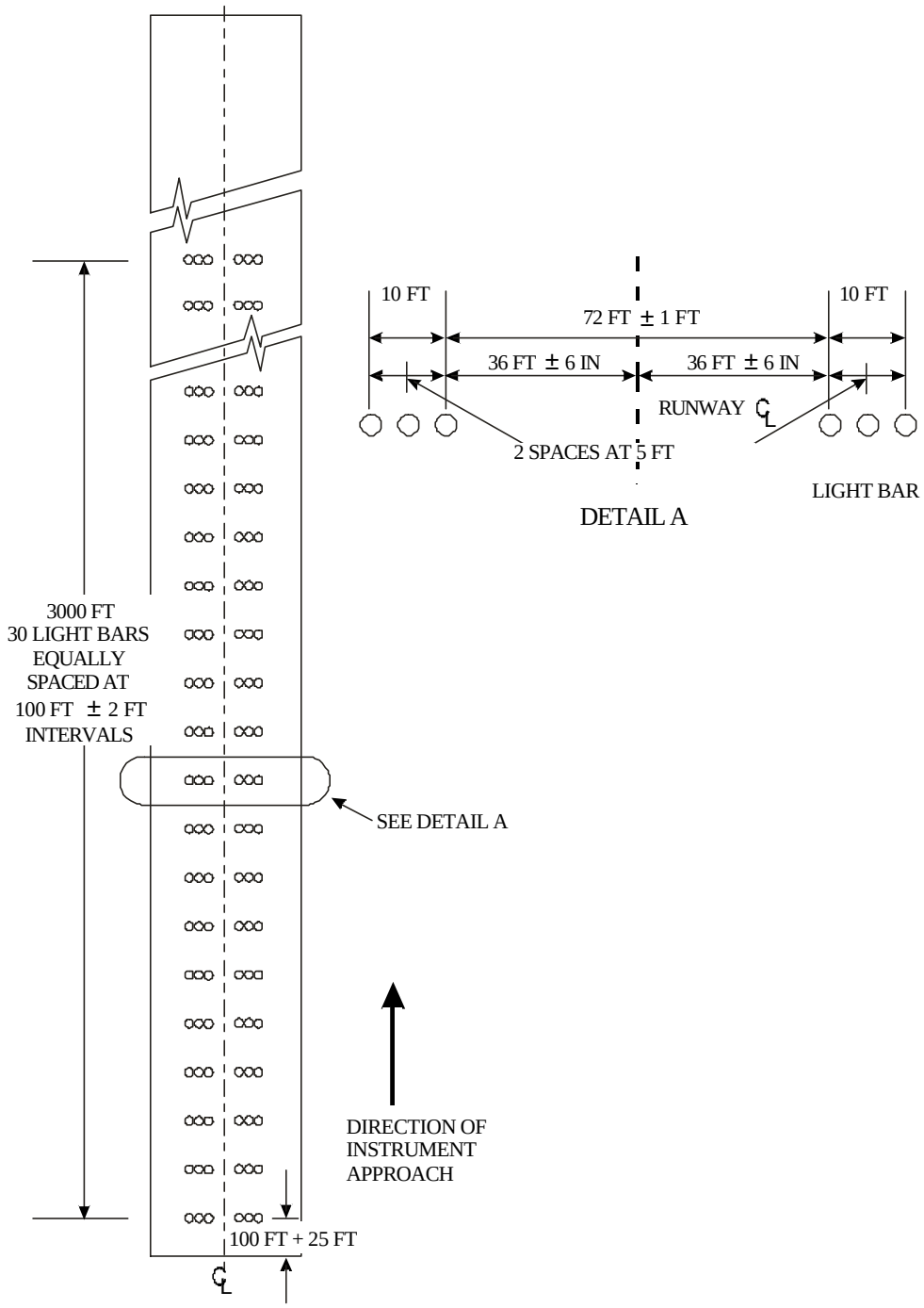

NOTES:

1. **THE LONGITUDINAL INSTALLATION TOLERANCE IN LOCATING THE PAIRS OF TRANSVERSE LIGHT BARS SHOULD NOT EXCEED 2 FEET. LATERAL TOLERANCE OF LIGHTS IN A BAR IS ±1".**
2. **THE SPACING BETWEEN THE INNERMOST TOUCHDOWN ZONE LIGHT FIXTURES SHALL SHALL BE 72'±1" AND SHALL BE UNIFORM THROUGHOUT THE LENGTH OF THE SYSTEM.**

Figure 1. Plan of touchdown zone lighting installation

9. METHODS OF INSTALLATION.

The preferred method of installing the TDZL is the base-mounted installation. For this method the semiflush lights are mounted on marker light bases set in a concrete foundation and connected by conduit to handholes at the edge of the runway. In existing runways the TDZL may use the direct-mounted method by installing inset lights in drilled holes and using saw kerfs for the cable runs.

10. DIMENSIONS.

(See figure 1.) The first pair of light bars shall be 100 ±25 feet from the runway threshold and the other light bars shall be space at 100 ±2 foot intervals along the runway. The line of lights in the barrettes shall be perpendicular to the runway centerline within two degrees. The inner lights in each pair of barrettes shall be 36 feet ±6 inches from the centerline of the runway centerline lights.

NOTE

The light fixtures within each barrette will be at different elevations as determined by the lateral slope of the runway surface.

The spacing of lights in a barrette shall be on 5 feet ± one inch centers. The light bases shall be level and the top of the flange at the proper depth below the runway surface. The light bases shall be oriented in azimuth for the beam axis to be aimed towards the runway threshold but toed-in 4 ±1 degrees towards the runway centerline. The vertical aiming of these lights is fixed.

11. EQUIPMENT.

The lighting equipment for the TDZL is as shown in table 1 and figure 2.

12. PHOTOMETRIC REQUIREMENTS.

The touchdown zone lights shall be unidirectional, in-pavement lights with beam of light directed toward the approach area. The axes of the beams shall be nearly parallel to the runway centerline but may be toed-in toward the centerline at not more than 4.5 degrees. The color of the emitted light shall be aviation white in accordance with ICAO, Annex 14, Vol. 1, App. 1. The intensity of these lights shall be variable in five steps of 100, 20, 4, 0.8, and 0.2 percent of rated intensity. The intensity-beamspread of the lights at rated current shall be shown in ~~figure 3~~**the FAA AC for the specific fixture**. The average intensity of the main beam shall be the arithmetic mean of all points inside Contour I on a uniform grid with points not more than one degree apart for each coordinate axis of the grid.

13. POWER AND CONTROLS.

14. POWER.

The power for the TDZL shall be provided by one or more 20A series circuits and one or two constant-current regulators in the airfield lighting vault. If two circuits are used, the circuits may be interleaved to provide a usable system if one circuit fails. The constant-current regulators (WP009 02) shall be 2400V input, 20A-output, 5-step intensity control, 50KW or 30KW size. The power sources for these visual aids shall include an emergency power source with arrangement for automatic transfer of power (WP009 01). The transfer time shall be not more than one second for Category II and Category III operations and not more than 15 seconds if only for Category I operations. The one second transfer time may be provided by operating on power from the auxiliary source during Category II and Category III conditions with transfer to the primary power source in one second if the auxiliary source malfunctions.

15. CONTROLS.

(See WP009 00.) The TDZL shall be provided with power and intensity control separate from the other lighting systems, except the TDZL shall be interconnected to operate only when the runway centerline lights are operating. These lights shall be controlled from the air traffic control tower. Local control for maintenance and emergency operations shall be from the airfield lighting vault. Normally, the TDZL will be operated only when the runway centerline lights and high-intensity runway edge lights are operating. The intensity controls of the TDZL shall be one of five steps as selected. The constant-current regulators shall regulate the light intensity, as selected, at levels of approximately 100, 20, 4, 0.8, and 0.2 percent of the intensity at rated current.

TABLE 1. SCHEDULE OF LIGHTING EQUIPMENT FOR TDZL[1/]

Purpose Type of Fixture	Lamp Rating and Type	Isolation Transformer	
		Rating	FAA Type AC150/5345-47
Base-Mounted Installation.			
FAA AC 150/ 5345-46, Type L-850-B	200W 6.6A, as determined by manufacturer.	200W 20/6.6A	L-830-7
Direct-Mounted Installation.			
FAA AC 150/ 5345-46, Type L-850BS	200W 6.6A, as determined by manufacturer.	200W 20/6.6A	L-830-7
Replacement of existing lights **only**.			
MIL-L-26202 Class BB-25	499W 20A, Q20A/PAR56/3	500W 20/20A	L-830-13

[1/] 180 lights are required for a complete system.

LIGHT: FAA AC 150/5345-46
TYPE L-850B

BASE: FAA AC 150/5345-42 TYPE L-868
SIZE B.

OR FOR INSET LIGHTS FAA AC 150/5345-46
TYPE L-850BS SPECIAL SHALLOW BASE.

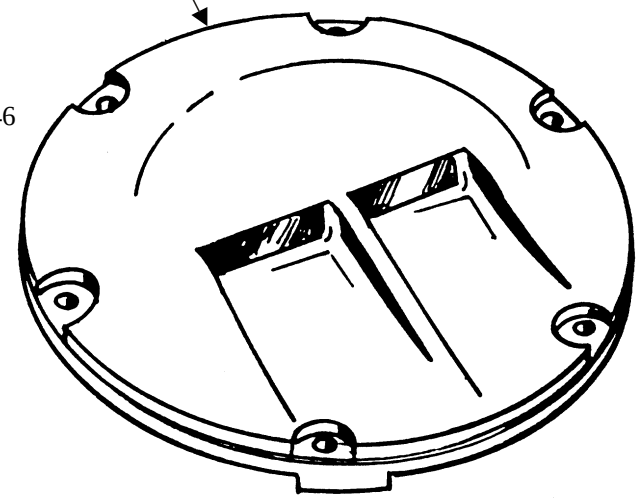

LAMP: 200W, 6.6A TYPE AS DETERMINED
BY MANUFACTURER

ISOLATION TRANSFORMER: 200W, 20/6.6A
FAA AC 150/5345-47 TYPE L-830-7

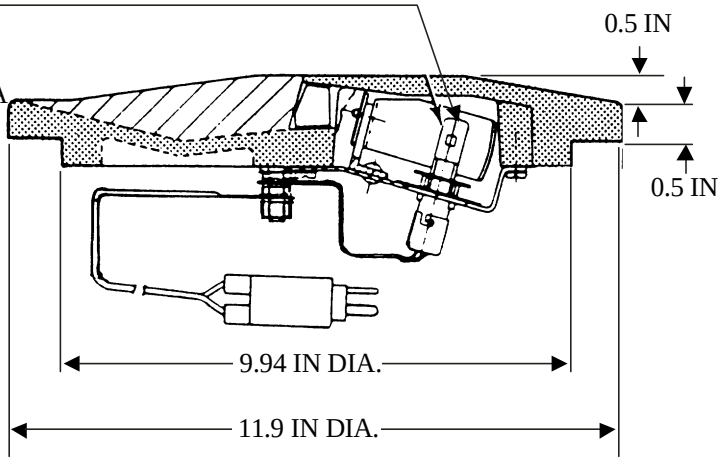

DIMENSIONS ARE FOR REFERENCE ONLY

NOTE: THE BEAM OF THESE LIGHTS SHALL BE TOED-IN TOWARDS THE RUNWAY CENTERLINE AND WILL REQUIRE RIGHT-HAND AND LEFT-HAND FIXTURES.

Figure 2. Touchdown zone light (TDZL) for new installations

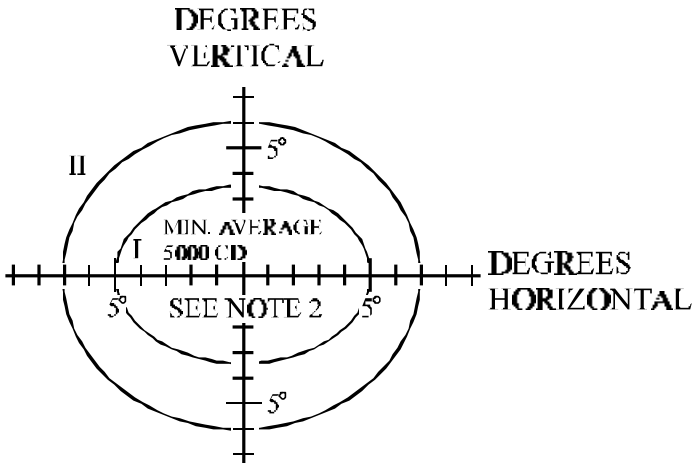

TOUCHDOWN ZONE LIGHTS, WHITE

	I=50%	II=10%
a	5.0°	7.0°
b	3.5°	6.0°

NOTES:

1. ALL CONTOURS ARE ELLIPSES CALCULATED BY EQUATION $\frac{X^2}{a^2} + \frac{Y^2}{b^2} = 1$
2. THE MINIMUM AVERAGE INTENSITY OF THE MAIN BEAM (INSIDE CONTOUR I) IS 5,000 CD AVIATION WHITE. MAXIMUM INTENSITY SHOULD NOT EXCEED 1.5 TIMES ACTUAL AVERAGE INTENSITY.
3. CONTOURS I=50% AND II=10% INDICATE THE MINIMUM VALUES AT THESE PERCENTAGES OF THE MAIN BEAM INTENSITY.
4. THE INTENSITY REQUIREMENTS FOR THE ANGLES BELOW THE SURFACE OF THE PAVEMENT MAY BE DISREGARDED.

~~Figure 3. Intensity-distribution requirements of TDZL lights~~

TECHNICAL MANUAL

RUNWAY EXIT LIGHTS

SHOREBASED AIRFIELDS

Reference Material

Introduction 002 00
~~Definitive Designs for Naval Shorebased Facilities ..... NAVFAC P-272~~
Runway Markings 004 01
High-Intensity Runway Edge Lights (HIRL) 004 05
Runway Centerline Lights (RCL) 004 06
Taxiway Markings 005 01
Taxiway Edge Lights 005 02
Taxiway Centerline Markings 005 03
Taxiway Guidance Signs 005 04
Electrical Power and Control for Visual Aids 009 00
Auxiliary Power and Power Transfer Equipment 009 01
Constant-Current Regulators 009 02
Design Drawings for Visual Air Navigation Facilities ..... UFC 3-535-02
~~Airfield Lighting ..... MIL-HDBK-1023/1~~
Aeronautical Ground Light and Surface Marking Colors ..... ICAO, Annex 14, Vol. 1, App. 1
Specification for Airport Light Base and Transformer Housing ..... FAA AC 150/5345-42
Specification for Taxiway and Runway Signs ..... FAA AC 150/5345-44
Specification for Runway and Taxiway Light Fixtures ..... FAA AC 150/5345-46
Isolation Transformers for Airport Lighting Systems ..... FAA AC 150/5345-47

Alphabetical Index

Subject **Page No.**

Aiming 5
Centerline Lights 3
Central Curve 2
Controls 10
Description 2
Dimensions And Tolerances. 4
Entrance Curve 2
Equipment 5
Existing Installations 2
Exit Edge Lights 3
Exit Guidance Signs 3
General Description. 2
General Information. 2
High-Speed Exits 2
Installation Requirements 3
Installations 3
Intensity Control 9
Justification Requirements. 2
Location. 4

Long-Radius Runway Exits 2
Low-Speed Exits 2
Methods Of Installation. 4
Photometric Requirements. 9
Power. 10
Power And Controls 10
Purpose. 2
Related Facilities 2
Schedule Of Lighting Equipment For Runway Exits 6
Segments 2
Short-Radius Runway Exits 2
Tolerances 4

Record of Applicable Technical Directives

None

1. GENERAL INFORMATION.

2. PURPOSE.

This Work Package (WP) contains the requirements for the lights for long-radius (high-speed) runway exits and for short-radius (low-speed) exits with visual problems. Both taxiway centerline and taxiway edge lights are used to mark these runway exits. The lights provide visual clues to pilots for departing a runway at high-speed exits before complete deceleration of the aircraft and at low speed exits with taxiing speeds at night and during daylight under restricted visibility conditions. The requirements apply for new installations and should be considered for replacement or upgrading of existing runway exits. These lights, with the exception of standard taxiway lights and guidance signs, are the only illuminated items applicable to runway exits.

3. JUSTIFICATION REQUIREMENTS.

Long-radius runway exit lights should be provided on runways with high-speed exits which may be used before the aircraft decelerates to taxiing speeds. Short-radius exits are intended for departing the runway at taxiing speeds. Deviations from these requirements shall be approved in accordance with WP002 00.

4. RELATED FACILITIES.

The related visual aids should include the following:

a. Taxiway markings (WP005 01),

b. Runway Markings (WP004 01),

c. Runway Edge Lights (WP004 05),

d. Runway Centerline Lights (WP004 06),

e. Taxiway edge lights (WP005 02),

f. Taxiway centerline lights (WP005 03), and

g. Taxiway guidance signs (WP005 04).

5. DESCRIPTION.

6. GENERAL.

Long-radius (high-speed) exits are those taxiways that exit from the runway at an angle between 20 and 30 degrees and have long-radius (greater than 1200 feet) curves for the centerline (figure 1). Usually aircraft use these exits only for departure from the runway and not as an entrance. The centerline for these taxiways have four segments:

a. A segment parallel to the runway centerline not less than 200 feet in length.

b. An entrance curve segment.

c. A central curve segment.

d. A straight segment along the taxiway centerline.

For Category III operations and for some exits with visual problems, regular short-radius runway exits shall be provided with exit centerline lights. Short-radius exits have an entrance curve from a line parallel to the runway centerline to the centerline of the taxiway. For all high-speed exits and for regular exits used for Category III operations or with visual guidance problems, the exit path should be provided with centerline lights. These exit lights are green semiflush lights placed along the exit taxiway centerline markings. Edge lights and guidance signs are also used to mark runway exits.

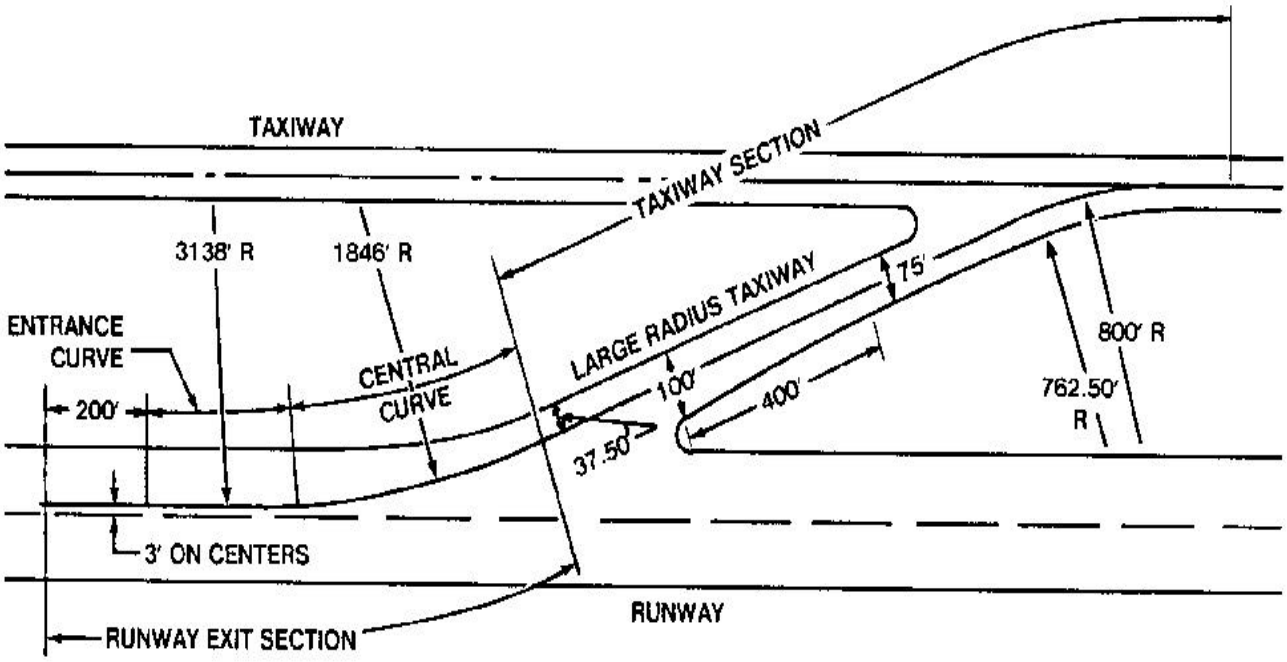

CURVE	20° TURN-OFF		30° TURN-OFF	
	RADIUS	LENGTH	RADIUS	LENGTH
ENTRANCE	3,138'	283'	3,138'	283'
CENTRAL	1,846'	478'	1,846'	800'
PAVEMENT EDGE	1,146'	400'	1,382'	723'

Figure 1. Typical long-radius runway exit

7. CENTERLINE LIGHTS.

Long-radius exits are intended for use only for exits and the centerline lights should be unidirectional. Bidirectional lights may be installed if the exit is also used as an entrance to the runway. These lights shall commence on a line parallel to the runway centerline before the beginning of the entrance curve and continue beyond the end of the central curve to a point on the taxiway centerline where an aircraft can be expected to reach normal taxiing speed (figure 2). For short-radius exits, (figure 3), unidirectional centerline lights shall be installed along the curve and bidirectional lights on the taxiway centerline. Exit centerline lights on the line parallel to the runway centerline shall be offset toward the departure side from the runway centerline or line of runway centerline lights. As the line of exit centerline lights curves away from the runway centerline, the lights may be located along the exit curve and taxiway centerline or may be offset to the inside of the curve. Exit centerline lights located within 35 feet of the runway centerline shall be hook-resistant type fixtures.

8. EXIT EDGE LIGHTS.

The edge lights for all runway exits shall be standard taxiway edge lights except the spacing shall not exceed 50 feet longitudinally. For taxiway edge light requirements, refer to WP005 02.

9. EXIT GUIDANCE SIGNS.

The exit guidance signs shall be standard taxiway guidance signs. For taxiway guidance signs requirements, refer to WP005 04.

10. INSTALLATIONS.

11. INSTALLATION REQUIREMENTS.

For installation details of the runway exit lights, refer to **UFC 3-535-02**~~MIL-HDBK-1023/1 and NAVFAC P-272~~. General design and installation requirements are given below.

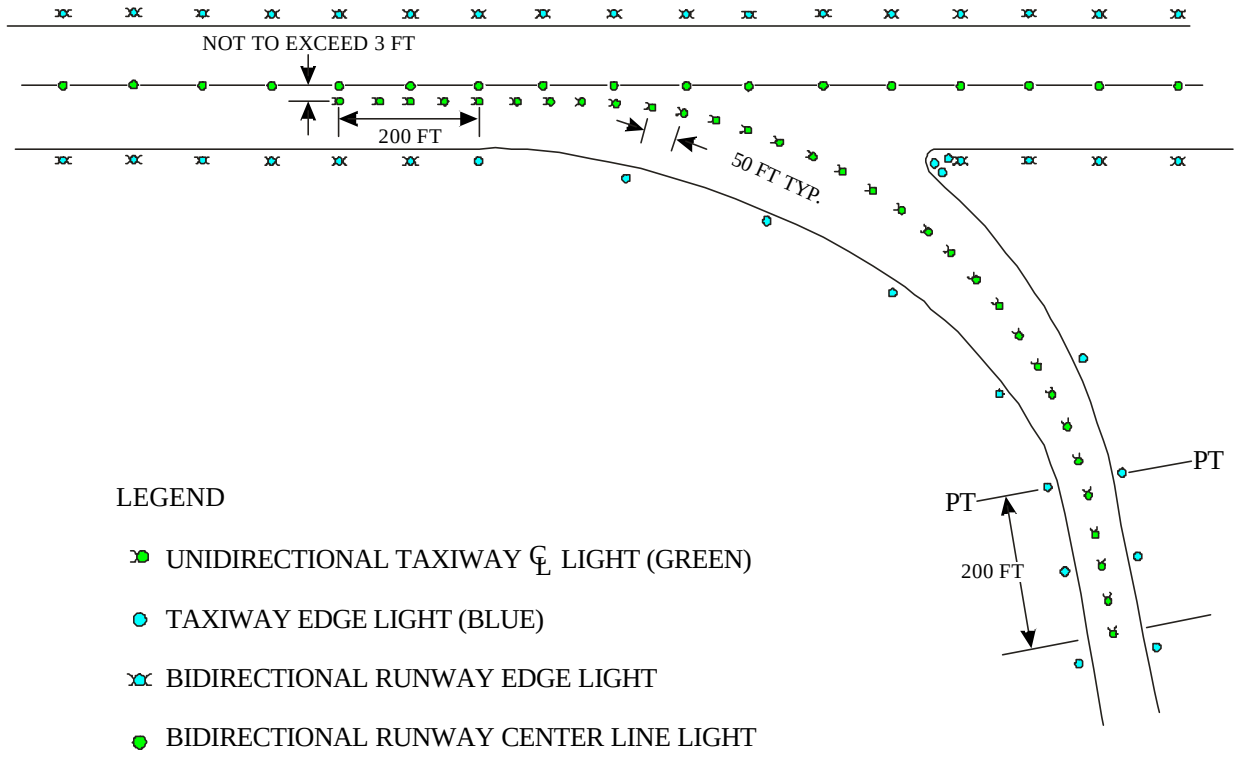

Figure 2. Large-radius runway exit lighting configuration

12. METHODS OF INSTALLATION.

The semiflush centerline exit lights shall be installed on marker light bases or in holes drilled in the pavement. The elevated exit lights may be installed on marker light bases or on conduit elbows set in concrete bases. Exit guidance signs shall be installed on concrete pads. All elevated lights and signs shall be mounted on frangible couplings. Preferably the cable to the centerline lights shall be in duct or conduit and not exposed cable in saw kerfs.

13. LOCATION.

The exit centerline lights shall be equally spaced along the exit path. The line of lights may be offset from the exit path center inside the curve to provide separation from the runway centerline or line of runway centerline lights or to avoid installation problems such as pavement joints. The offset shall be 3 feet from the runway centerline or line of runway centerline lights and not more than 15 inches from the center of the exit path or the taxiway centerline. For long-radius exits, the centerline lights shall start not less than 200 feet before the point of tangency of the curve away from the runway centerline and shall continue for not less than 200 feet beyond the point of tangency with the straight segment of the taxiway centerline (figure 2). For short-radius exits the centerline lights shall start at the point of tangency of the exit path with the line parallel to the runway centerline and shall not terminate less than 200 feet beyond the point of tangency of the exit path with the taxiway centerline (figure 3). The exit edge lights and the exit guidance signs shall be located in accordance with the requirements of WP005 02 and WP005 04, respectively.

14. DIMENSIONS AND TOLERANCES.

The spacing of the long-radius exit centerline lights shall be not more than 50 feet. The spacing of the short-radius centerline lights shall be not more than 25 feet. The spacings shall have a tolerance of 12 inches to avoid installations at construction joints. For the runway exit edge lights, the spacings and tolerances shall be as for standard taxiway edge lights (WP005 02) except the spacing shall be not more than 50 feet for 200 feet along the taxiway edge beyond the point of tangency. The aiming tolerance for the centerline lights shall not exceed 2 degrees.

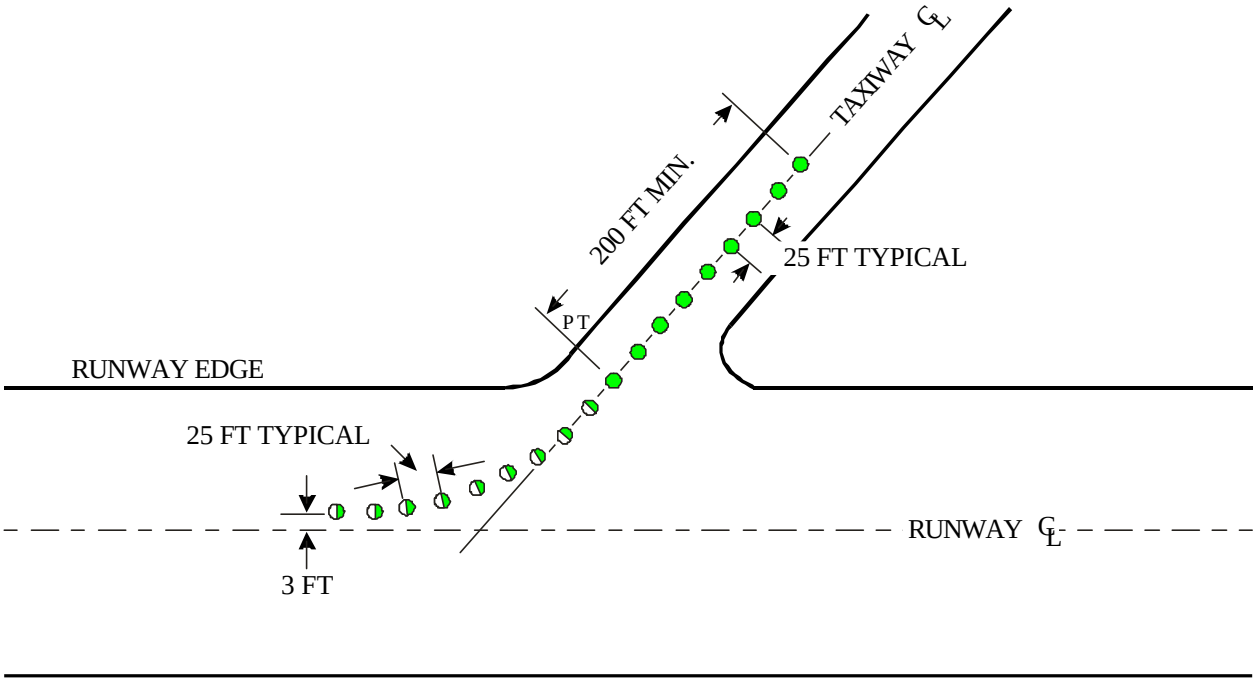

LEGEND

◐ UNIDIRECTIONAL LIGHTS (STANDARD TAXIWAY CENTERLINE)
● MAY BE BIDIRECTIONAL IF USED FOR BIDIRECTIONAL TRAFFIC

Figure 3. Typical short-radius runway exit centerline lights

15. AIMING.

The unidirectional runway exit centerline lights shall be aimed to direct the beams of light toward the approaching aircraft. The horizontal alignment shall be as follows:

a. For long-radius exits, the lights on the segment parallel to the runway centerline shall have the axes of the beams parallel to the runway centerline.

b. For long-radius exits, the lights on the entrance curve and central curve segments shall have the lights aligned so that the axes of the beams intersects the line of lights not less than 200 feet or 4 lights ahead of the light.

~~c.~~**c.** For short-radius exits, the lights along the curved segment shall have the lights aligned with the axes of beams tangential to the curve.

d. For both types of exits, the lights on the taxiway segment shall have the axes of the beams parallel to the taxiway centerline.

e. The edge lights are omnidirectional and do not require horizontal aiming.

16. EQUIPMENT.

The lighting equipment for the runway high-speed exit shall be as shown in table 1 and figures 4, 5, and 6. Centerline lights within 35 feet of the runway centerline shall be hook-resistant type fixtures. Frangible couplings shall be used for mounting the elevated edge lights.

TABLE 1. SCHEDULE OF LIGHTING EQUIPMENT FOR RUNWAY EXITS

Purpose Type of Fixture	Lamp Rating and Type	Isolation Transformer Rating	Isolation Transformer FAA Type AC150/5345-47
Centerline exit lights.[1/]			
Lights within 35’ of runway centerline.			
Type L-852 Navy style VII or VIII, green.[2/]	65W 6.6A, as determined by manufacturer.	65W 6.6/6.6A or 200W 6.6/6.6A for three lights.	L-830-3 L-830-6
Lights more than 35’ from runway centerline.			
FAA AC 150/ 5345-46, Type L-852A, straight sections.	45W 6.6A, as determined by manufacturer.	30/45W 6.6/6.6A or 200W 6.6/6.6A for four lights.	L-830-1 L-830-6
FAA AC 150/ 5345-46, Type L-852B, curved sections.	45W 6.6A, as determined by manufacturer.	65W 6.6/6.6A or 200W 6.6/6.6A for three lights.	L-830-3 L-830-6
Runway exit edge lights.[1/]			
FAA AC 150/ 5345-46 Type L-861T, blue	45W 6.6A, as determined by manufacturer.	30/45W 6.6/ 6.6A	L-830-1
Runway exit signs, one.			
FAA AC 150/ 5345-44 Type L-858Y size 2, style 2	Determined by manufacturer.	Determined by manufacturer.	

[1/] The number of lights required varies with dimensions of the runway exit and the spacing interval between lights.

[2/] The lights of this type are bidirectional but the beam in the opposite direction shall be blanked out.

LIGHT: IN-PAVEMENT:
FAA AC 150/5345-46
L-852N TYPE VII OR VIII
BLANKOUT ONE BEAM FOR UNIDIRECTIONAL

LAMP: 45W 6.6A, TYPE AS DETERMINED BY MANUFACTURER

FILTER: GREEN, TYPE AS DETERMINED BY MANUFACTURER

ISOLATION TRANSFORMER: 3-/45W 6.6/6.6A, FAA AC 150/5345-47, TYPE L-830-1

BASE: FAA AC 150/5345-42 TYPE L-858
SIZE A 10" DIA. FOR TYPE VII LIGHT OR
SIZE B 12" DIA. FOR TYPE VII LIGHT

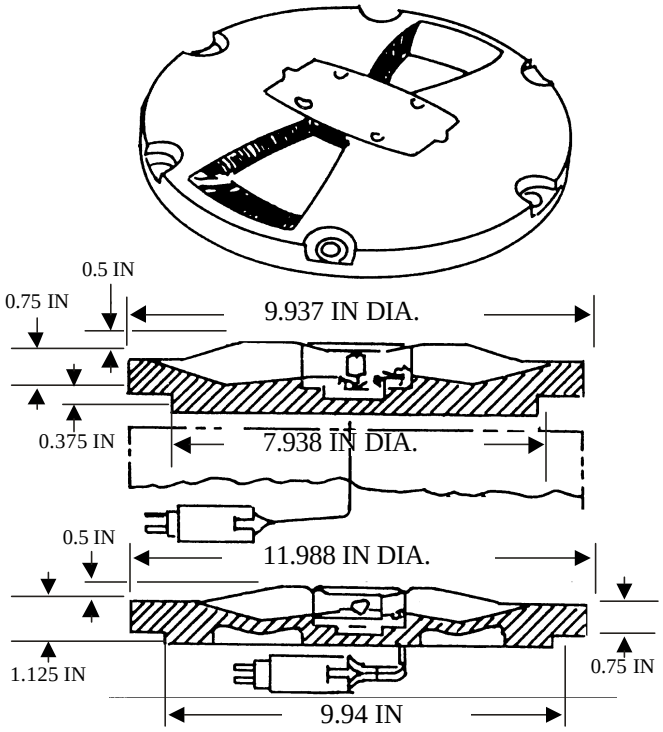

NOTE: DIMENSIONS ARE FOR REFERENCE ONLY

Figure 4. Typical runway exit centerline light, class L-852N Navy

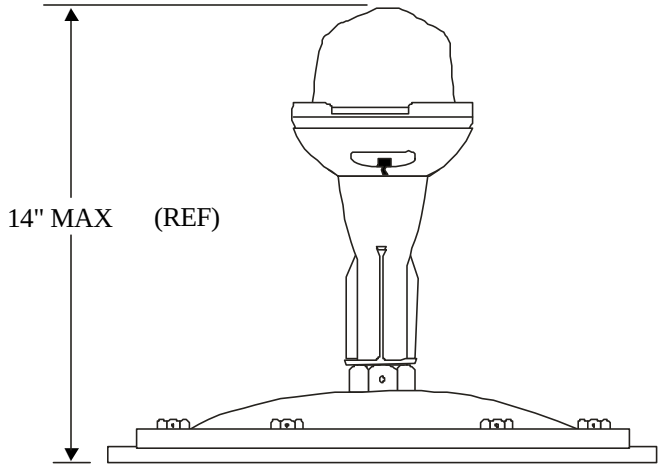

DIMENSIONS ARE FOR REFERENCE ONLY

LIGHT: ELEVATED, 45W 6.6A, FAA AC 150/5345-46, TYPE L-861T, BLUE

LAMP: 6.6A, TYPE AS DETERMINED BY MANUFACTURER

GLOBE: BLUE

ISOLATION TRANSFORMER: 30/45W 6.6/6.6A

FAA AC 150/5345-47, TYPE L-830-1

MOUNTED ON FRANGIBLE COUPLING, MAY BE EITHER ON LIGHT BASE OR CONDUIT.

Figure 5. Typical runway exit edge light, FAA L-861T

LIGHT: SEMIFLUSH, BIDIRECTIONAL OR UNIDIRECTIONAL, FAA AC 150/5345-46 TYPE L-852A OR B, AS REQUIRED FOR NARROW-BEAM, OR WIDE-BEAM.

LAMP: 6.6A, 45 OR 65 WATTS, TYPE AS DETERMINED BY MANUFACTURER.

FILTERS: AVIATION GREEN, TYPE AS DETERMINED BY MANUFACTURER.

ISOLATION TRANSFORMER: 6.6/6.6A, 30/45W FAA AC 150/5345-47, TYPE L-830-1.
OR
6.6/6.6A, 65W FAA AC 150/5345-47 TYPE L-830-3

COLOR OF EMITTED LIGHT IS AVIATION GREEN.

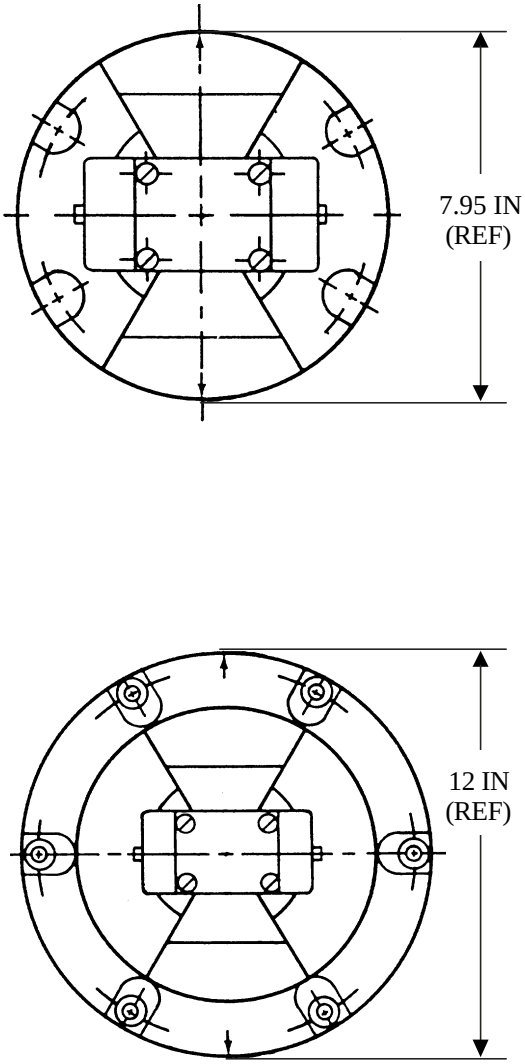

Figure 6. Typical runway exit centerline light, FAA type L-852A or B

17. PHOTOMETRIC REQUIREMENTS.

The centerline runway exit lights shall be unidirectional for long-radius exits and along the curve of short-radius exits and bidirectional along the taxiway centerline. The fixtures are the same for either type of light except the unidirectional lights shall include an opaque filter for one beam. For the bidirectional lights the axes of the beams shall be 180 degrees apart in azimuth. The elevation of the axes of the beams shall be between 2 and 4 degrees above the horizontal. The color of these lights shall be aviation green in accordance with ICAO, Annex 14, Vol. 1, App. 1. Exit edge lights shall be aviation blue. The intensity shall be variable in not less than three progressive steps with the lowest step not more than 10 percent of rated intensity. The minimum intensity at rated current in green of each beam shall be not less than 60 candelas for beamspread of ±10 degrees in azimuth and 0 to 7 degrees in elevation. The

photometric requirements for the edge lights and signs shall be as required in WP005 02 for the lights and WP005 04 for the signs.

18. POWER AND CONTROLS.

19. POWER.

The power for the runway high-speed exit lights shall be supplied by one or more series circuits. The centerline lights and the edge lights may be on separate circuits or on the same circuit. Other runway exit signs or taxiway lights may be connected to this circuit. The source of power for these circuits shall be from one or more constant-current regulators (WP009 02) with 6.6A output current and not less than three intensity steps. The power for these long-radius exit lights shall have the same auxiliary or secondary power and automatic transfer requirements (WP009 01) as the runway edge lights. Power for short-radius exit lights shall be the same as the connecting taxiway lights. The transfer time is usually 15 seconds, except if the runway is authorized for Category II or Category III operations the transfer time for long radius exit lights is one second. For the centerline lights an individual isolation transformer for each light is preferred; however, three or four lights with lamp failure by-pass devices connected to the secondary of a 200W isolation transformer may be used. All cables in the pavement for the centerline lights should be in duct or conduit to prevent possible damage from the effects of high-speed turns on pavement saw kerfs. The edge lights should have individual isolation transformers.

20. CONTROLS.

The runway exit lights are controlled from the air traffic control tower panel with secondary control in the airfield lighting vault (WP009 00). The controls may be part of the taxiway lights control. Not less than three-steps of intensity control should be provided. Although the centerline and edge lights may be on different circuits, both types of lights should have the same energizing and intensity setting switches.

TECHNICAL MANUAL

RUNWAY DISTANCE MARKERS (RDM)

SHOREBASED AIRFIELDS

Reference Material

Introduction 002 00
~~Definitive Designs for Naval Shorebased Facilities ..... NAVFAC P-272~~
Circling Guidance Lights 003 04
Runway Markings 004 01
Runway Threshold Lights 004 02
Runway End Lights 004 04
High-Intensity Runway Edge Lights (HIRL) 004 05
Arresting Gear Markers 004 10
Design Drawings for Visual Air Navigation Facilities ..... UFC 3-535-02
Specification for Taxiway and Runway Signs ..... FAA AC 150/5345-44
Isolation Transformers for Airport Lighting ..... FAA AC 150/5345-47

Alphabetical Index

Subject **Page No.**

Arresting Gear Markers 5
Control. 6
Description. 2
Dimensions And Tolerances. 5
Equipment. 5
Existing Installations 2
General Information. 2
Installation Requirements. 2
Installations. 2
Internally Illuminated Markers 5
Justification Requirements. 2
Location. 2
Methods Of Installation. 2
Mounting For Deep Snow Areas. 5
Photometric Requirements. 5
Power. 5
Power And Control. 5
Purpose. 2
Related Facilities. 2
Schedule Of Lighting Equipment For Runway Exits 6
Tolerances. 5
Unlighted Markers 5

Record of Applicable Technical Directives

None

1. GENERAL INFORMATION.

2. PURPOSE.

This Work Package (WP) contains the requirements for Runway Distance Marker(s) (RDM). The purpose of the RDM is to indicate to aircraft pilots the distance remaining to the end of the runway during takeoff or landing. The RDM provide this information for day or night operations in all weather conditions. These requirements are a design guide to be used for new installations. Existing installations may continue to be used and maintained, but these requirements shall apply for replacements or major upgrading of the RDM system.

3. JUSTIFICATION REQUIREMENTS.

The RDM should be provided for all runways where fixed wing jet aircraft operations are conducted and are recommended for runways intended for operations of propeller type aircraft. If the runway is used for nighttime or low visibility Instrument Flight Rules (IFR) operations (WP002 00), the RDM shall be an internally illuminated type except for some training and auxiliary fields. If the runway is used only for daytime operations the RDM may be unlighted markers. For training or auxiliary fields where nighttime operations are limited to Visual Flight Rules (VFR) conditions and the aircraft are normally equipped with landing lights, the RDM may be unlighted retroreflective type markers. Approval for deviations from these requirements is required (WP002 00).

4. RELATED FACILITIES.

The visual aids used in conjunction with the RDM are as follows:

a. Runway Markings (WP004 01),

b. High Intensity Runway edge Lights (HIRL) (WP004 05),

c. Threshold lights (WP004 02),

d. Runway End Lights (WP004 04),

e. Circling guidance lights (WP003 04),

f. Arresting gear markers (WP004 10).

5. DESCRIPTION.

6. The RDM shall consist of a row of vertical markers (signs) along each side of the runway spaced 1000 feet longitudinally. The faces of the markers shall be vertical. Each face of the markers shall indicate the distance in thousands of feet remaining to the end of the runway. An example of an RDM system installation is shown in Figure 1. The color for these shall be white numerals on a black background. Existing installations of markers with yellow numerals may continue in service, but only one color should be used for a runway.

7. INSTALLATIONS.

8. INSTALLATION REQUIREMENTS.

For installation details of the runway distance markers, refer to **UFC 3-535-02**~~NAVFAC P-272~~. General design and installation requirements are given below.

9. METHODS OF INSTALLATION.

These markers shall be mounted on frangible couplings. The electrical cables enter the markers through conduit in the concrete base and the frangible couplings.

10. LOCATION.

The rows of RDM are parallel to and equidistant from the runway centerline. A pair of markers on opposite sides of the runway is located at each 1000-foot spacing (figure 1). The lines connecting the pairs of markers shall be perpendicular to the runway centerline. The apex or edges of the markers nearest the runway in each row shall form a line not less than 50 feet and not more than 75 feet from the full-strength runway edge. The 75-foot distance is preferred. The marker shall be not less than 50 feet from the edge of any intersecting runway or taxiway. Where the 1000-foot positions do not provide clearance from an intersecting runway or taxiway, the position of the pair of markers may be moved a maximum of 100 feet to obtain the clearance (figure 2). If this variation in position does not permit the required clearance for both markers, install a single marker if possible.

11. For runways with lengths that are not exact multiples of 1000 feet, the extra distance is apportioned at the runway ends by the equation

$$E = \frac{D - M}{2}$$

where

E = the excess distance in feet to be added to the interval at the runway ends,

D = length of runway in feet,

M = the distance in feet of the maximum number of 1000-foot intervals.

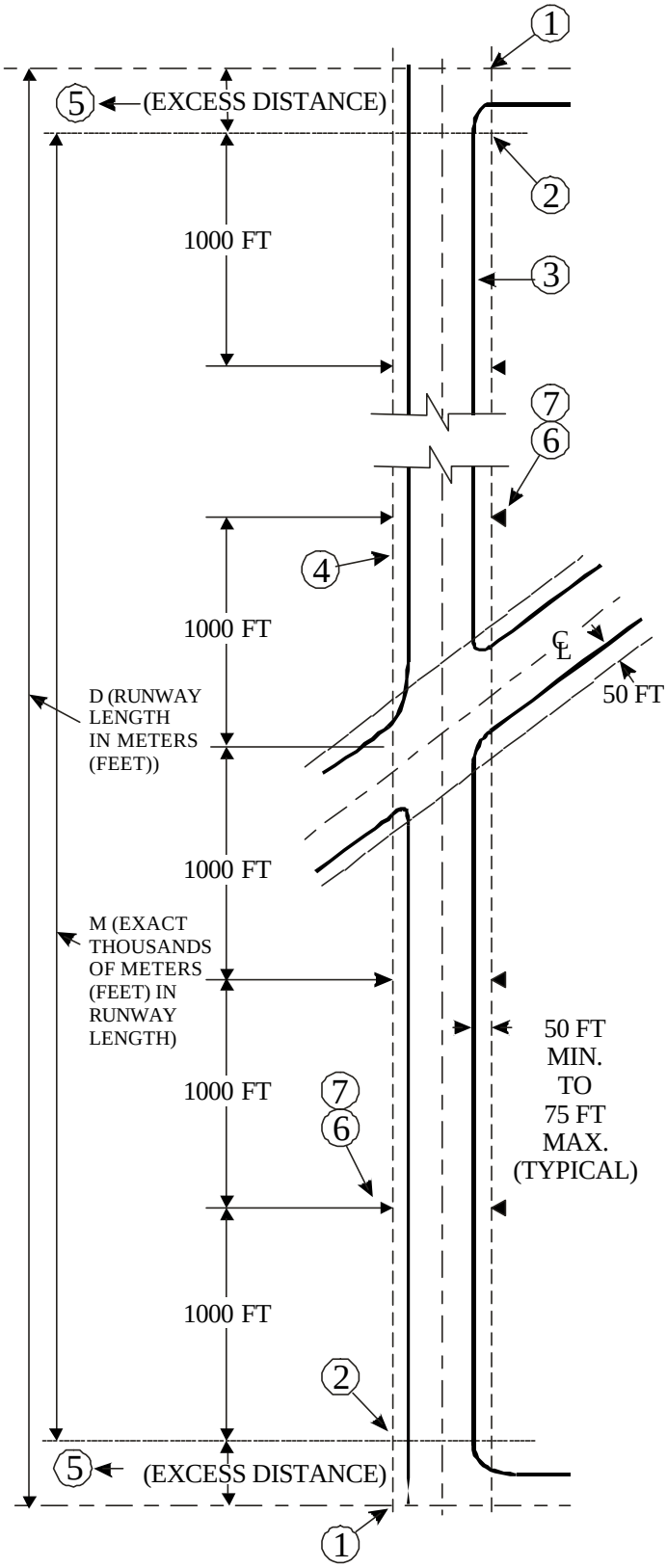

NOTES:

1. INDICATES INDEX POINT.
2. INDICATES ZERO POINT. A RUNWAY DISTANCE MARKER SIGN IS NOT INSTALLED AT A ZERO POINT.
3. INDICATES EDGE FULL STRENGTH RUNWAY PAVEMENT.
4. INDICATES LINE OF SIGNS.
5. EXCESS DISTANCE (E) IS EQUAL TO ONE HALF OF THE DISTANCE THAT THE RUNWAY LENGTH EXCEEDS EXACT THOUSANDS OF METERS (FEET). THE EXCESS DISTANCE LOCATES THE ZERO POINT. FORMULA FOR EXCESS DISTANCE:

$$E = \frac{D - M}{2}$$

6. RUNWAY DISTANCE MARKER SIGNS ARE LOCATED LONGITUDINALLY AT 1000 FT INTERVALS ALONG THE LINES OF SIGNS BETWEEN ZERO POINTS.
7. LOCATE SIGN LATERALLY SO APEX OR EDGE OF SIGN NEAREST RUNWAY WILL BE ON THE LINE OF SIGNS.

LEGEND:

▶ INDICATES LOCATION AT WHICH SIGN IS INSTALLED

– – – INDICATES LINE OF MARKERS (SIGNS)

– — INDICATES LINE THROUGH RUNWAY THRESHOLD

——— INDICATES LINES THROUGH ZERO POINT

—— INDICATES 50 FT CLEARANCE FROM EDGE OF INTERSECTING PAVEMENT

Figure 1. Runway distance marker installation

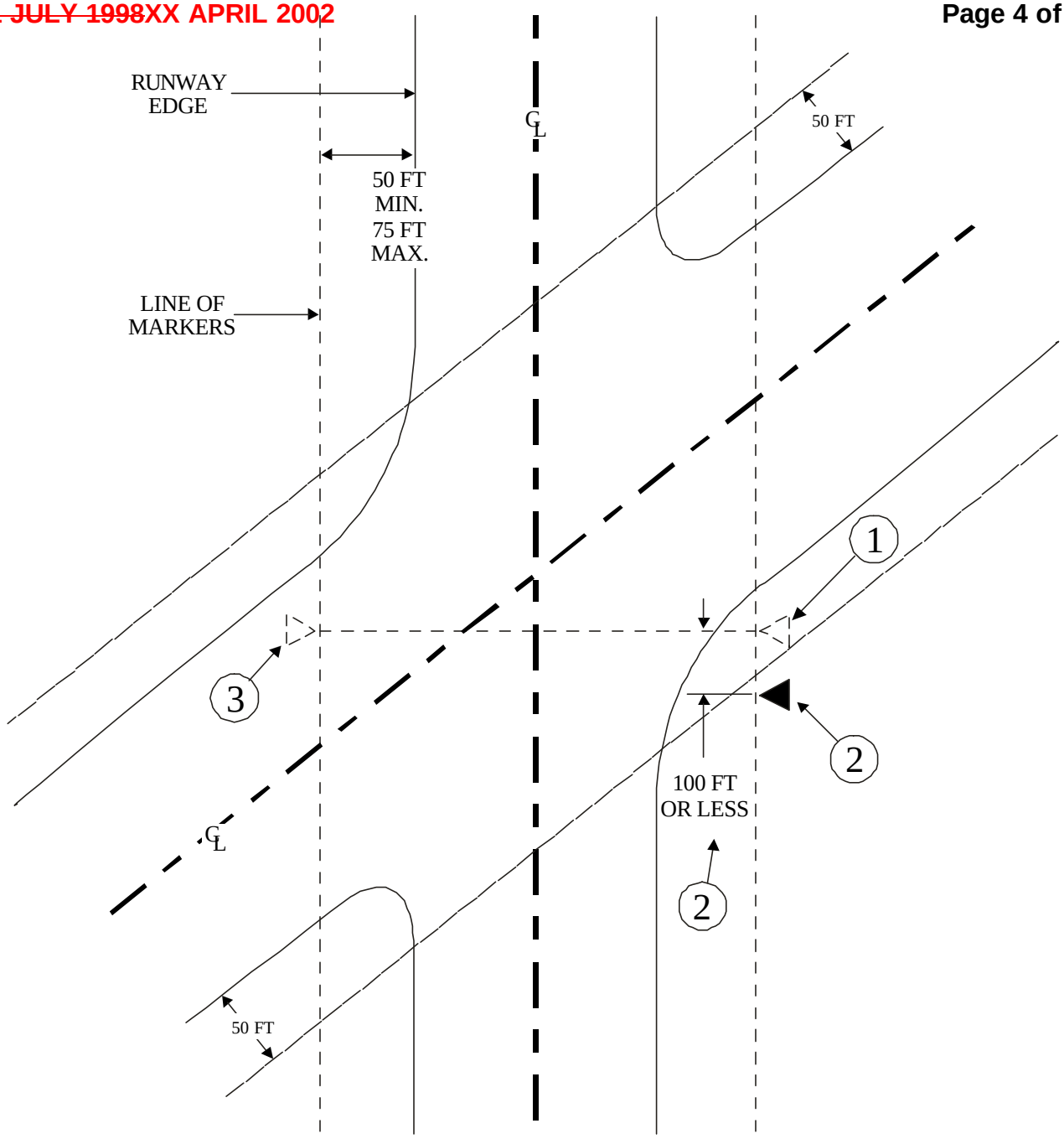

NOTES:

(1) INDICATES SIGN LOCATION CLOSER THAN 50 FT TO EDGE OF INTERSECTING PAVEMENT.

(2) INDICATES ADJUSTED SIGN LOCATION. THE ADJUSTED LOCATION IS 100 FT OR LESS FROM LOCATION DESIGNATED BY NOTE 1, BUT IS NO MORE THAN 50 FT FROM EDGE OF INTERSECTING PAVEMENT.

(3) OMIT THIS MARKER. IT CAN NOT ADEQUATELY CLEAR THE INTERSECTING PAVEMENT.

Figure 2. Typical distance marker installation at intersection

An example is for a runway 9750 feet in length, the excess distance, E, equals 375 feet. The zero points for measuring the 1000-foot interval is located 375 feet along the runway from each end. Markers are not installed at zero points or runway ends.

12. The RDM markers shall not obstruct or be obstructed by the arresting gear markers. If the normal position for a pair of RDM conflicts with the location of arresting gear markers, the positions of the pair of RDM may be adjusted to provide adequate separation (WP004 10). The arresting gear markers shall have position precedence over the RDM.

13. MOUNTING FOR DEEP SNOW AREAS.

In areas with frequent snow accumulations of six inches or more, raising the RDMs may be needed to reduce the buildup of drifting snow against the markers. The bottoms of the markers may need to be raised 12 inches or more above the frangible couplings in some areas. However, because of the increased wind loading with the longer leverage, the markers should have three or four support legs with at least one leg out of the common alignment. The extension nipples shall fit the frangible couplings and the attachments to the markers. Check with the marker manufacturers for suitability of their markers for this type of installation, cable lengths, and any special installation requirements. If excessive wind loading causes extra maintenance, the standard mounting may be used during part of the year.

14. DIMENSIONS AND TOLERANCES.

The installation of the RDM shall be as follows:

a. The bases of the markers shall be not less than 6 inches above the ground.

b. The top of the marker shall be not more than 57 ±3 inches above the near runway edge at the position, except for areas with frequent deep snow problems.

c. The axes of the markers shall be at right angles ±2 degrees to the runway centerline and along the lines connecting the pairs of markers. The lines connecting the pairs of markers shall be at right angles ±1 degree to the runway centerline.

d. Individual markers may have a tolerance of ±12 inches from the line of RDM.

e. The longitudinal location of the pairs of RDM may have a tolerance of ±10 feet to avoid installation problems and ±100 feet to provide clearance from the intersecting runways and taxiways.

f. The vertical axis of the marker allows a tolerance of ±2 degrees.

15. <u>EQUIPMENT.</u>

The basic equipment for the RDM are elevated markers or signs as given in table 1 and typical markers are shown in figure 3. The faces of the markers shall be 4 foot by 4 foot with a white numeral on a black background as sown in figure 4. All markers for a runway should have the same type numerals. The numeral shall be one or two digits to indicate the distance in thousands of feet to the end of the runway for each direction. Three classes of markers are used for specific purposes as follows:

a. Unlighted markers for daytime operations only. These markers are usually constructed locally as shown in figure 3.A and consist of painted numerals and background on a sheet of plywood or metal.

b. Unlighted markers that may be used at night only for VFR operations. These markers are similar to markers of “A” except the numerals are retroreflective white.

c. Internally lighted markers for general service use. These markers are as shown in figure 3.B.

16. PHOTOMETRIC REQUIREMENTS.

The average luminance of the numeral at rated current (6.6 amperes) shall be not less than 5 or more than 75 footlamberts. The illuminated area of the marker shall be uniformly lighted and legible at not less than 800 feet. The average luminance of the numeral at the lowest brightness setting (2.8 amperes) shall be not less than 50 percent of the average luminance at rated current.

17. <u>POWER AND CONTROL</u>.

18. POWER.

The electrical power required for the internally illuminated markers is usually supplied from the associated HIRL circuit. Each marker is individually powered from the nearest available runway edge light. The circuit may be either 6.6A or 20A for which a suitable isolation transformer is required. The markers must be provided with power units that maintain the brightness of the markers at not less than 50 percent of full brightness for any intensity setting of the HIRL. The emergency power and automatic transfer requirements are provided by the HIRL. A second source of power may be the circuit for the circling guidance lights which may not have emergency power.

19. CONTROL.

The RDM do not have separate switching of brightness control. The control is provided by the system circuit to which the RDM is connected.

TABLE 1. SCHEDULE OF LIGHTING EQUIPMENT FOR RUNWAY EXITS

Purpose and[1/] Type of Fixture	Lamp Rating and Type	Isolation Transformer	
		Rating	FAA Type AC150/5345-47
Day only Unlighted markers, local manufacture	None		
Night, VFR only Retroreflective markers, local manufacture	None		
Standard RDM Internally lighted markers			
FAA AC 150/5345-44 Type L-858B size 4, style 3	As determined by manufacturer.	As determined by manufacturer.	

[1/] Number of RDM required varies with length of runway.

TYPE: LOCAL MANUFACTURE, WHITE PAINT OR RETROREFLECTIVE TYPE NUMBER ON BLACK BACKGROUND.

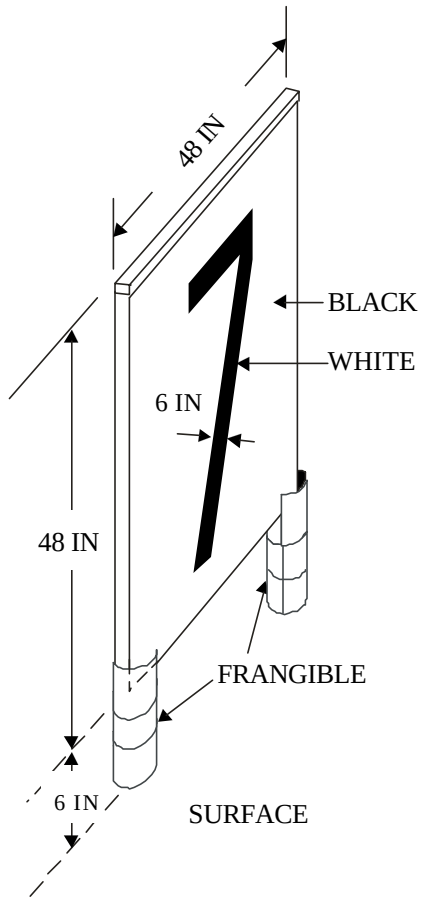

A. UNLIGHTED MARKER

MARKER: FAA AC 150/5345-44, TYPE L-858B, SIZE 4, STYLE 3.

LAMP: TYPE AS DETERMINED BY MANUFACTURER.

ISOLATION TRANSFORMER: RATING AS DETERMINED BY THE MANUFACTURER.

COLOR: WHITE NUMERALS ON A BLACK BACKGROUND OR FOR EXISTING INSTALLATIONS YELLOW NUMERALS ON A BLACK BACKGROUND.

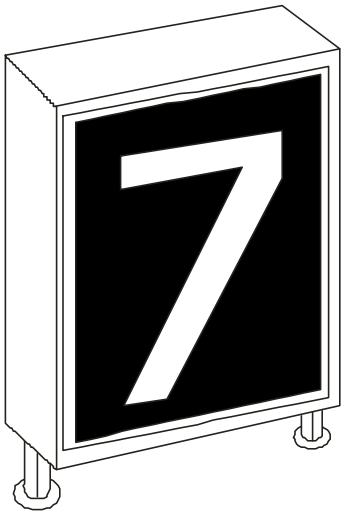

B. INTERNALLY ILLUMINATED MARKER

Figure 3. Typical runway distance markers (RDM)

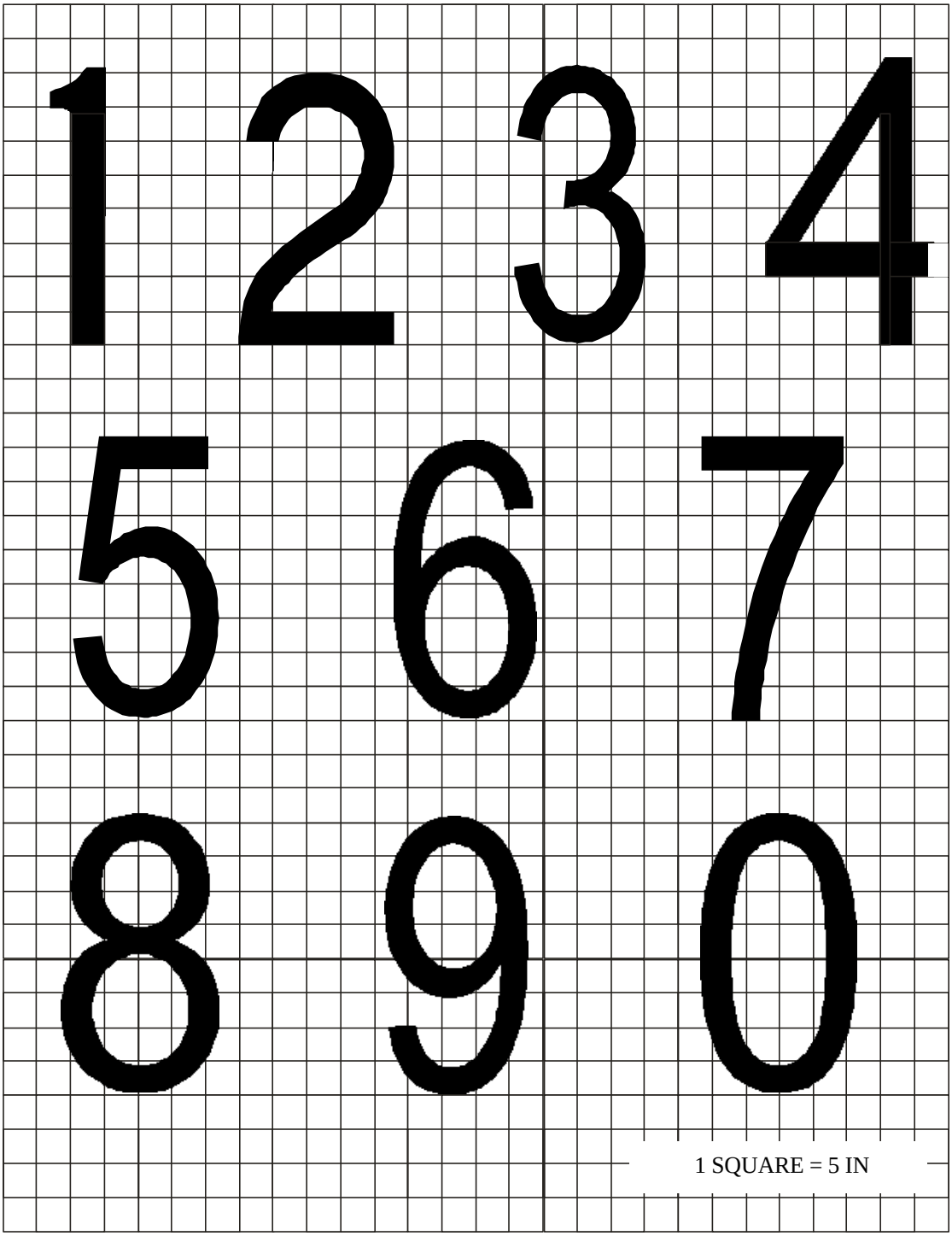

Figure 4. Typical runway distance markers numerals

TECHNICAL MANUAL

ARRESTING GEAR MARKERS AND MARKINGS

SHOREBASED AIRFIELDS

Reference Material

Paint, Airfield Marking, Solvent Base ..... FED TT-P-85
Introduction 002 00
~~Definitive Designs for Naval Shorebased Facilities ..... NAVFAC P-272~~
Runway Markings 004 01
Runway Threshold Lights 004 02
Runway End Lights 004 04
High-Intensity Runway Edge Lights (HIRL) 004 05
Runway Distance Markers (RDM) 004 09
Colors FED-STD-595
Auxiliary Power and Power Transfer Equipment 009 01
Beads (Glass Spheres) Retroreflective ..... FED TT-B-1325
Paint, Airfield Marking, Water Emulsion Base ..... FED TT-P-1952
Aeronautical Ground Light and Surface Marking Colors ..... ICAO, Annex 14, Vol. 1, App. 1
Light, Marker, Airport, Semiflush MIL-L-26202
Design Drawings for Visual Air Navigation Facilities ..... UFC 3-535-02
Specification for Taxiway and Runway Signs ..... FAA AC 150/5345-44
Specification for Runway and Taxiway Light Fixtures ..... FAA AC 150/5345-46
Isolation Transformers for Airport Lighting Systems ..... FAA AC 150/5345-47
Standards for Specifying Construction of Airports ..... FAA AC 150/5370-10

Alphabetical Index

Subject **Page No.**

Arresting Gear Markers. 2
Control. 6
Description. 2
Dimensions And Tolerances. 3
Equipment. 3
Existing Installations. 2
General Information. 2
Installation Requirements. 2
Installations. 2
Justification Requirements. 2
Location. 2
Markings 3
Methods Of Installation. 2
Pendant Cable Markings. 3
Photometric Requirements. 3
Power. 3
Power And Control. 3
Purpose. 2
Related Facilities. 2

Schedule Of Lighting Equipment For Arresting Gear Markers 6
Semiflush Runway Edge Lights 3
Tolerances 3

Record of Applicable Technical Directives

None

1. GENERAL INFORMATION.

2. PURPOSE.

This Work Package (WP) contains the requirements for arresting gear markers and pendant cable markings used in conjunction with arresting gear. Their purpose is to provide the pilot with information as to the exact location of the deck pendant to prepare for arrestment. These markers are used for day and night operations in all weather conditions. These requirements are to be used for new installations. Existing installations may continue to be used and maintained, but these requirements shall apply for replacements or major upgrading of the arresting gear marker system.

3. JUSTIFICATION REQUIREMENTS.

All operational arresting gear shall have the associated arresting gear markers. Approval of requests for deviations from these requirements shall be processed as directed in WP002 00.

4. RELATED FACILITIES.

In addition to the arresting gear, other airfield visual aids related to the use of the arresting gear markers include the following:

a. High Intensity Runway edge Lights (HIRL) (WP004 05),

b. Threshold lights (WP004 02),

c. Runway End Lights (WP004 04),

d. Runway Distance Markers (RDM) (WP004 09),

e. Runway Markings (WP004 01).

5. DESCRIPTION.

6. Each arresting gear installation shall be provided with a pair of arresting gear markers. These markers or signs shall be located in line with the deck pendant, one on each side of the runway, and shall be internally lighted for use at night. The position of the pendant cable may be marked with a series of yellow disks in a line across the runway.

7. INSTALLATIONS.

8. INSTALLATION REQUIREMENTS.

For installation details for arresting gear signs refer to **UFC 3-535-02**~~NAVFAC P-272~~ and for installation of markings refer to FAA AC 150/5370-10. General design and installation requirements for arresting gear markers and markings are given below.

9. METHODS OF INSTALLATION.

The markers shall be mounted on frangible couplings. The electrical cables enter the markers through conduit in the concrete base and the frangible couplings. The pendant cable markings are painted on the surface of the runway.

10. LOCATION.

The location of the arresting gear markers and the pendant cable markings shall be as follows:

11. Arresting Gear Markers.

The arresting gear markers shall be located in line with the deck pendant position and equidistant from the runway centerline for each arresting gear installation. The edge of the marker nearest to the runway shall be not less than 60 feet from the runway edge. If the position of the arresting gear markers should conflict with or be obscured by the Runway Distance Markers (RDM) these markers shall be relocated to avoid the problem. The arresting gear markers shall have precedence for viewing from the runway. Guides for relocating the RDM are as follows:

a. If the RDM is the same distance from the runway edge as the arresting gear marker, but 20 feet or more longitudinally from it, relocating the RDM is not required.

b. If the RDM position is less than 20 feet longitudinally along the runway from the arresting gear markers, the RDM shall be located in line with the deck pendant and 10 feet or more farther from the runway edge than the arresting gear markers.

c. If the RDM position is closer to the runway edge and between 20 an 200 feet longitudinally from the arresting gear markers, the RDM shall be relocated the same distance from the runway edge as the arresting gear markers.

d. If the RDM position is farther from the runway edge and 200 feet or more longitudinally from the arresting gear markers, the RDM may be located the same distance from the runway edge as the arresting gear markers if the RDM is obscured in its required viewing range.

12. Pendant Cable Markings.

The pendant cable markings (see figure 1) shall be equally spaced in a line at right angles to the runway centerline with the centerline between the two center disks. The disks shall be centered along the cable axis when the cable is rigged for engagement. Where the disk markings coincide with the white runway markings (WP004 01), the runway markings are interrupted at this location for an area not less than one foot from the edge of the disk marking. Regulations of some states, such as California, or other authorities may prohibit or restrict the use of solvent base paints. For the yellow markings, this may require using type TT-P-1952 instead of type TT-P-85 paint. For the slower drying type TT-P-1952 paint, timing of application of the retroreflective beads (spheres) may be required to assure adherence of the beads without sinking too deeply into the paint.

13. DIMENSIONS AND TOLERANCES.

The installation of the markers and markings shall be as follows:

a. The bases of the arresting gear markers shall be not less than 6 inches above the ground.

b. The top of the marker shall be not more than 57 ±3 inches above the near runway edge at the position.

c. The axes of the markers shall be at right angles ±2 degrees to the runway centerline and along the lines connecting the pairs of markers.

d. Individual markers may have a 1-foot tolerance from the line along the deck pendant.

e. The faces of the signs shall be vertical ±2 degrees.

f. The pendant cable markings shall be 10-foot ±2 inches diameter disks with centers spaced at 25 feet ±6 inches across the runway. The nearest edges of the center disks shall be 7.5 feet ±1 inch from the runway centerline on each side. A 200-foot wide runway shall have eight disks.

14. EQUIPMENT.

The arresting gear marker shall be as shown in table 1 and figure 2. These markers shall be internally illuminated and the brightness shall be not less than 50 percent of full brightness for any intensity setting. Each face of the marker shall have a yellow translucent disk not less than 39 inches in diameter centered on a black opaque background 48 inches square.

All arresting gear markers shall be mounted on frangible couplings. If the runway edge lights are an elevated type and may be damaged by the arresting gear during arrestment operation, these elevated lights shall be replaced with semiflush runway edge lights (WP004 05). Use FAA fixtures AC 150/5345-46, Type L-850C ~~preferred or MIL-L-26202 class B-15 as replacements~~. The pendant cable markings shall be retroreflective yellow painted on the runway surface.

15. PHOTOMETRIC REQUIREMENTS.

The average luminance of the arresting gear marker disk at rated current shall be not less than 5 or more than 50 footlamberts. The ratio of the brightest area to the darkest areas shall not exceed 4:1. The average luminance of the disk at the lowest brightness setting shall be not less than 50 percent of the average luminance at rated current. The color of the emitted light shall be aviation yellow in accordance with ICAO, Annex 14, Vol. 1, App. 1. When unlighted, the sign colors shall be in accordance with FED-STD-595 chip No. 23538 for yellow and chip No. 27038 for black. The color of the pendant cable markings shall be retroreflective aviation surface yellow in accordance with FED-STD-595, chip No. 23538.

16. POWER AND CONTROL.

17. POWER.

The electrical power required for the arresting gear markers is supplied from one of the following sources:

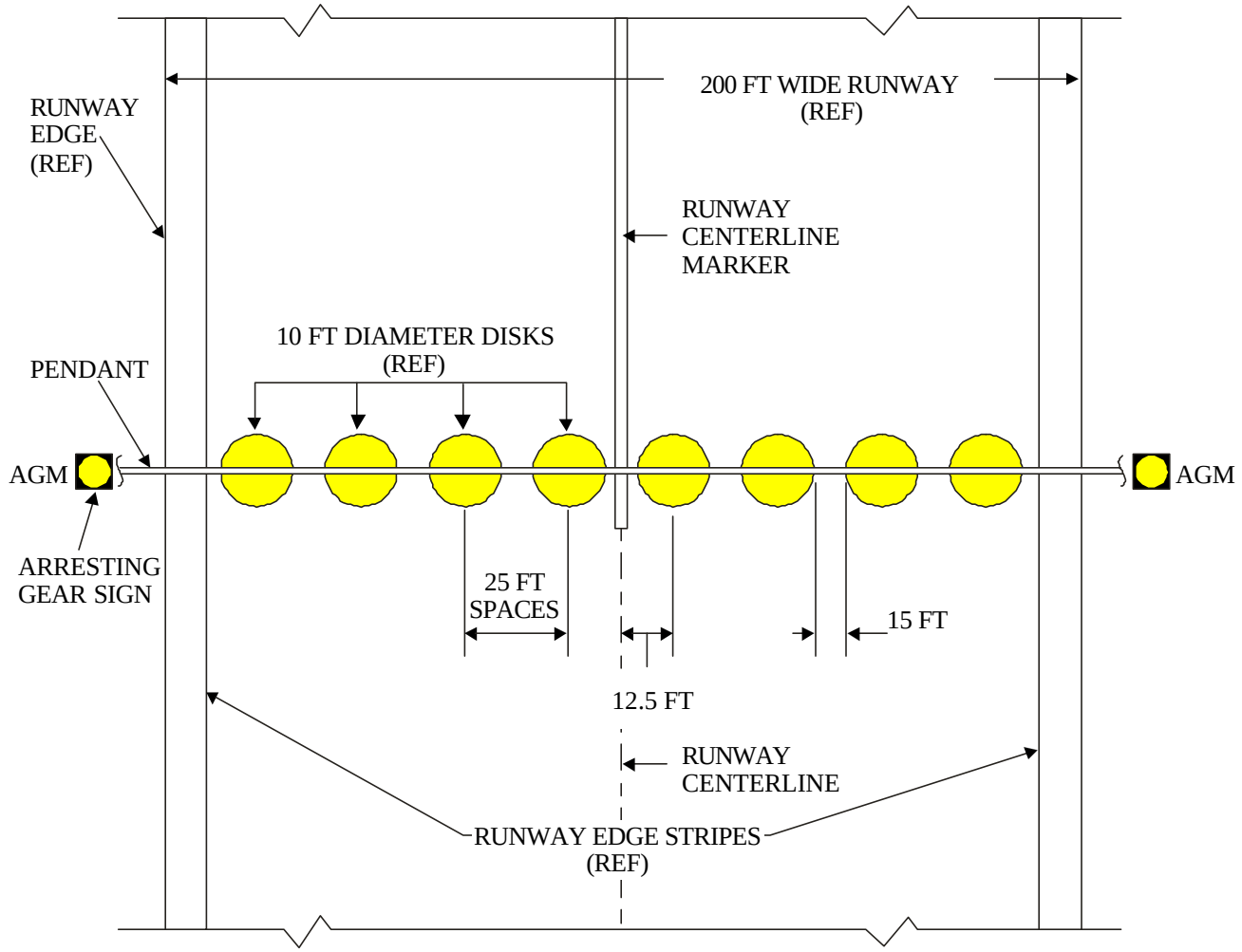

COLOR OF DISKS IS RETROREFLECTIVE YELLOW

Figure 1. Configuration for pendant cable markings

TABLE 1. SCHEDULE OF LIGHTING EQUIPMENT FOR ARRESTING GEAR MARKERS

Purpose and[1/] Type of Fixture	Lamp Rating and Type	Isolation Transformer	
		Rating	FAA Type AC150/5345-47
Arresting gear markers.			
FAA AC 150/ 5345-44 Type L-858B size 4, style 1 or 3, yellow disk	As determined by manufacturer.	As determined by manufacturer.	
Replacement of elevated runway edge lights. (See WP004 05)			
Pendant cable markings.			

Paint, retroreflective yellow, Federal Specification TT-P-85[2/] or TT-P-1952 and glass beads TT-B-1325 Type III gradation A.

[1/] Two markers for each arresting gear installed. Number of semiflush lights vary with the installation, usually 4 to 8 per arresting gear.

[2/] Some area authorities may prohibit or restrict the use of this type of paint.

a. A 120 VAC local source, if available. Emergency power should be provided.

b. The runway edge light circuit for the runway. Each marker is connected to the circuit at the nearest available runway edge light. The circuit may be either 6.6A or 20A for which a suitable isolation transformer is required. The markers must be provided with power units that maintain the brightness of the markers at not less than 20 percent of full brightness for any intensity setting. The emergency power and automatic transfer requirements (WP009 01) are provided by the runway edge light circuits.

18. CONTROL.

If the arresting gear markers are powered from the runway edge light circuit, separate switching of the brightness control is not required. If these markers obtain power from a local 120 VAC source, ON-OFF switching may be provided by photo-electric switches or by remote manual control. Brightness control is not required.

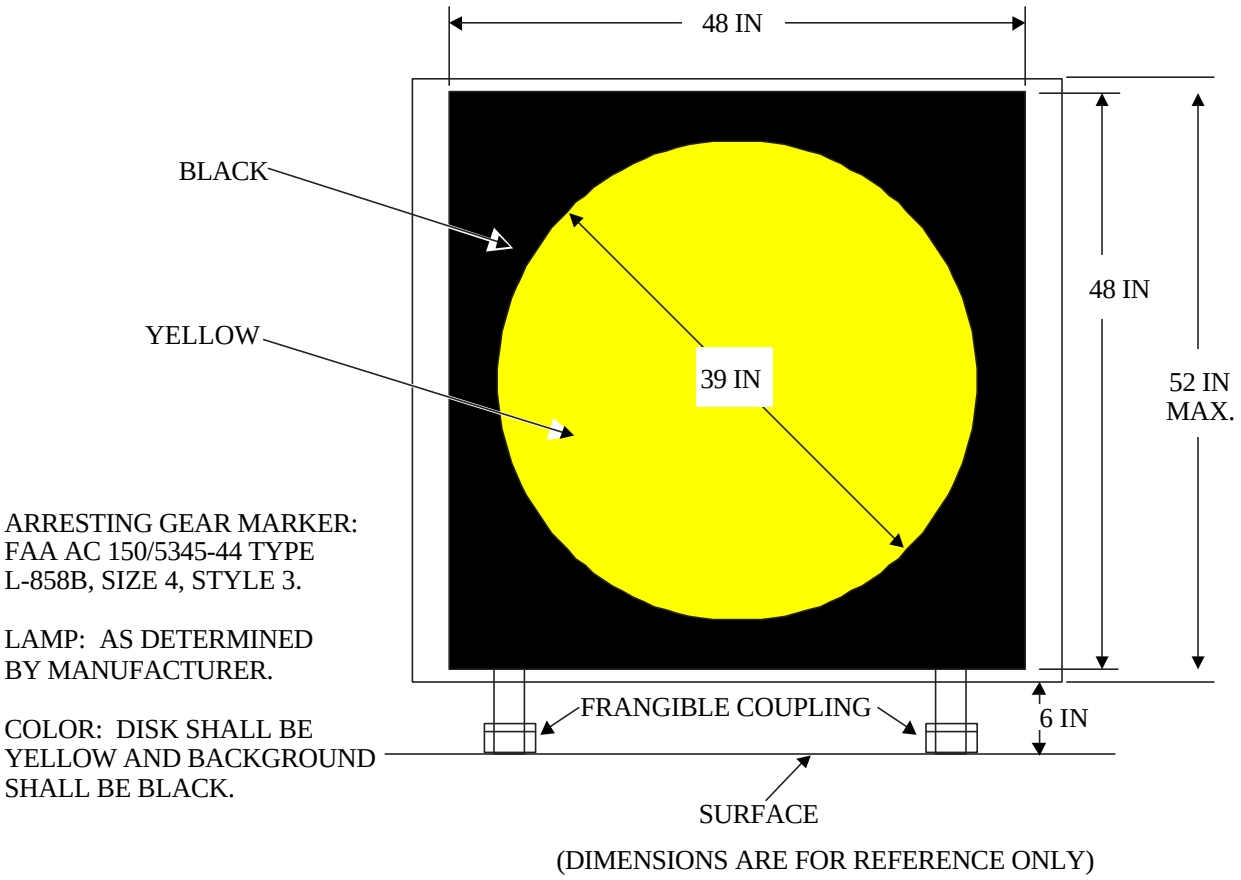

NOTE: BASE MARKER MAY BE TRIANGULAR OR RECTANGLE.

Figure 2. Typical arresting gear marker

TECHNICAL MANUAL

TAXIWAY VISUAL AIDS

SHOREBASED AIRFIELDS

Reference Material

Introduction 002 00
~~Definitive Designs for Naval Shore Facilities ..... NAVFAC P-272~~
Taxiway Markings 005 01
Taxiway Edge Lights 005 02
Taxiway Centerline Markings 005 03
Taxiway Guidance Signs 005 04
Special Taxiway Signs (TACAN, Billboards) 005 05
Holding Position Signs and Lights for Intersections with Runways 005 06
Taxiway Lights for Runways Used as Taxiways 005 07
Design Drawings for Visual Air Navigation Facilities ..... UFC 3-535-02
~~Airfield Lighting ..... MIL-HDBK-1023/1~~
Marking of Paved Areas on Airports ..... FAA AC 150/5340-1
Standards for Specifying Construction of Airports ..... FAA AC 150/5370-10

Alphabetical Index

Subject **Page No.**

Description Of Taxiway Visual Aids 2
Existing Installations 2
Flight Rules. 2
General Information. 1
Implementation 2
Purpose. 1
Scope 2
Selection Of Taxiway Visual Aids 2
Standardization. 2
Taxiway Visual Aids Requirements 3

Record of Applicable Technical Directives

None

1. GENERAL INFORMATION.

2. PURPOSE.

Taxiway visual aids consist of markings, lights, and signs located on or near the taxiways. The purpose of these visual aids is to identify routes and provide guidance to pilots for safe and efficient taxiing to and from runways and service areas during any operational condition. These visual aids shall clearly define the taxiway surface and its limits, provide directional and destination information, and also mark critical areas and areas of special interest. The information must be easily recognized and used in restricted visibility conditions, day or night, to the operating minimums authorized for the airfield.

3. SCOPE.

The taxiway visual aids Section of this Technical Manual contains the configuration requirements, applications, basic design and installation criteria, and equipment required for installation of taxiways of Navy shorebased airfields. Each taxiway shall have adequate visual aids to satisfy the requirements for taxiing operations along that route. The requirements contained in the individual Work Package(s) (WP) provide guidance for personnel servicing existing systems or designing new installations. Existing installations may be used and maintained as installed; however, extensions, major modifications, or upgrading shall comply with the requirements of the WP for these aids.

4. STANDARDIZATION.

The WP for each visual aid system establishes the requirements to be used for Navy airfields. By combining the WPs for all the taxiway visual aids required for the mission and special characteristics of the airfield, standardization of taxiway visual aids for Navy airfields is attained. When deviations of installations are necessary, they shall be authorized in accordance with the approval procedures of WP002 00.

5. FLIGHT RULES.

Flight rules do not apply to taxiing operations, but the taxiway visual aids must perform satisfactorily in all authorized flight conditions. The taxiway visual aids required for Visual Flight Rules (VFR) may not need the number or type of aids necessary for Instrument Flight Rules (IFR). (See WP002 00 for definitions of flight rules.) The critical areas for clearances from the runway may be greater for Category II and Category III operations than for operations in better visual range conditions. However, the taxiway visual aids required for the lowest authorized flight category will also provide the guidance required for the higher visibility conditions. The design of visual aids for a given taxiway shall be that which is required for the lowest visibility condition when the taxiway is used.

6. DESCRIPTION OF TAXIWAY VISUAL AIDS.

7. The taxiway lights and markings identify the area as a taxiway, define its limits, and provide directional guidance for maneuvering the aircraft. The signs provide information on routes to taxi destinations and identify areas along the taxi route. Taxiway markings are painted on the paved surfaces and include centerline, edge, holding position, and checkpoint markings. The taxiway lights include either edge lights, centerline lights, or a combination of both lights, and in some cases holding position lights. Taxiway guidance signs provide mandatory information which the pilot must recognize because of the existence of potential hazards. Also general information is provided that assists the pilot in proceeding along the proper taxi route. Special signs may provide checkpoint information or routing information at complex intersections. The locations, types, and information on the signs varies for each taxiway.

8. SELECTION OF TAXIWAY VISUAL AIDS.

The types of taxiway visual aids required depend on the lowest meteorological conditions authorized for operations and the arrangement of runways and service areas of the airfield. Table 1 is a guide for determining the aids to be provided. The design requirements are found in the WP or each type of taxiway aid. In designing the system of taxiway visual aids, the effort must be coordinated with ground control. For installation details refer to ~~MIL-HDBK-1023/1 and NAVFAC P-272~~**UFC 3-535-02** for taxiway lights and signs and FAA AC 150/5340-1 and AC 150/5370-10 for taxiway markings.

9. IMPLEMENTATION.

The WP and requirements of this Section are not intended to direct or request implementation but are to establish uniformity when implementation is undertaken.

TABLE 1. TAXIWAY VISUAL AIDS REQUIREMENTS

Visual Aids System	Authorized Operations				
		IFR Category			
	VFR	Non-Prec	I	II	III
Taxiway Markings (WP005 01)	R	R	R	R	R
Taxiway Edge Lights (WP005 02)	R	R	R	R	C
Taxiway Centerline Lights, Intersections (WP005 03)	NR	OPT	C	C	R
Taxiway Centerline Lights, Continuous (WP005 03)	NR	NR	OPT	C	R
Taxiway Guidance Signs (WP005 04)	RS	C	R	R	R
Special Signs (TACAN) (WP005 05)	RS	RS	RS	RS	RS
Special Signs (Billboards) (WP005 05)	RS	RS	RS	RS	RS
Holding Position Signs (WP005 06)	C	R	R	R	R
Holding Position Lights (WP005 06)	RS	RS	RS	RS	RS
Taxiway Lights for Runways Used as Taxiways (WP005 07)	RS	RS	RS	RS	RS

C - Recommended
R - Required
RS - Required under special conditions. * Examples: Established TACAN checkpoint; runway used as taxiway.
OPT - Option as recommended by air station commander and approved by NAVAIR.
NR - Not Required.

TECHNICAL MANUAL

TAXIWAY MARKINGS

SHOREBASED AIRFIELDS

Reference Material

~~Paint, Traffic and Airfield Marking, Solvent Base ..... FED-TT-P-85~~
~~Paint, Traffic, Black (Nonretroreflective) ..... FED-TT-P-110~~
Introduction 002 00
Runway Markings 004 01
Taxiway Visual Aids 005 00
Special Taxiway Signs (TACAN, Billboards) 005 05
Colors FED-STD-595
Apron and Parking Area Markings 006 01
Beads (Glass Spheres), Retroreflective FED-TT-B-P-1325
Paint, Traffic and Airfield Marking, Water Emulsion Base FED-TT-P-1952
Marking of Paved Areas on Airports ..... FAA AC 150/5340-1
Standards for Specifying Construction of Airports ..... FAA AC 150/5370-10

Alphabetical Index

Subject **Page No.**

Borders For Markings 7
Category II Holding Position Markings. 6
Centerline Markings 2
Clearance Markings 6
Closed Taxiway Markings. 7
Description 2
Edge Markings 7
Existing Installations 2
Failed or Hazardous Area Markings 7
General Description. 2
General Information. 2
Hazardous Area Markings. 7
Holding Position Markings 6
Installation Requirements 8
Installations 8
Intersections with Runways ..... 6, 7, and 8
Justification Requirements. 2
Long-Radius Exit Markings 6
Materials. 9
Materials For Taxiway Markings 8
Photometric Requirements. 9
Precedence At Intersections. 8
Purpose. 2
Related Facilities 2
Restrictions 9
Runway Clearance Markings 6

Runway Entrance-Exit Markings..... 6
Shoulder Markings..... 7
Standard Holding Position Markings..... 6
TACAN Checkpoint Markings..... 6
Taxiway Centerline Markings..... 2
Taxiway Edge Markings..... 7
Taxiway Shoulder Markings..... 7

Record of Applicable Technical Directives

None

1. GENERAL INFORMATION.

2. PURPOSE.

This Work Package (WP) contains the requirements for the Taxiway Markings for paved taxiways on shorebased airfields. These markings provide visual cues pilots for taxiway identification, longitudinal alignment information, holding position lines, taxiway edge recognition, and runway exits. They assist pilots in taxiing aircraft between the runway and the parking or service areas. These requirements establish uniformity for ease of recognition in the interest of safety and efficiency. The requirements shall be used for all new or resurfaced taxiways and whenever the existing markings are to be repainted. Existing taxiway markings may continue to be used until repainting is required.

3. JUSTIFICATION REQUIREMENTS.

The taxiway markings are the basic visual aids for taxiing guidance during daylight for Visual Flight Rules (VFR) or Instrument Flight Rules (IFR) operations (WP002 00). The taxiway markings aid in taxiing at night although the edge lights or centerline lights are the basic visual aid. All paved taxiways shall be provided with taxiway markings. Additional markings or modifications may be approved for special operating conditions (WP002 00).

4. RELATED FACILITIES.

This WP includes all the standard taxiway markings. However these markings are related to the runway markings (WP004 01) for runway exits and entrances and connect with the apron and parking area markings (WP006 01). The markings are related to the taxiway lights and signs as indicated in taxiway visual aids (WP005 00).

5. DESCRIPTION.

6. GENERAL.

The taxiway markings consist of a system of markings identified by the functions which they serve. The elements of the taxiway markings are as follows:

a. Taxiway centerline markings — required.

b. Holding position markings (Standard and Category II) — required.

c. Runway entrance-exit markings — required.

d. TACAN checkpoint markings — required, if established.

e. Edge markings — optional.

f. Shoulder markings — optional.

g. Hazardous area markings — optional.

h. Closed taxiway markings — optional.

The markings shall be painted of the specified color applied to the taxiway surface except temporary hazardous area markings may use flags or barrier markings. Also temporary closed taxiway markings may be of materials such as tape of the proper color that can be easily removed. The markings configurations shall be as shown in figures 1, 2, and 3.

7. TAXIWAY CENTERLINE MARKINGS.

(See figure 1.) The centerline markings shall be a continuous retroreflective yellow stripe not less than 6 inches wide located along the taxiway axis. If taxiway centerline lights are installed, the axis of the centerline stripe may be offset not more than 12 inches from the taxiway centerline to avoid painting over the lights. These markings provide identification of a taxiway and longitudinal guidance for steering the aircraft. The markings may continue across intersecting taxiways or

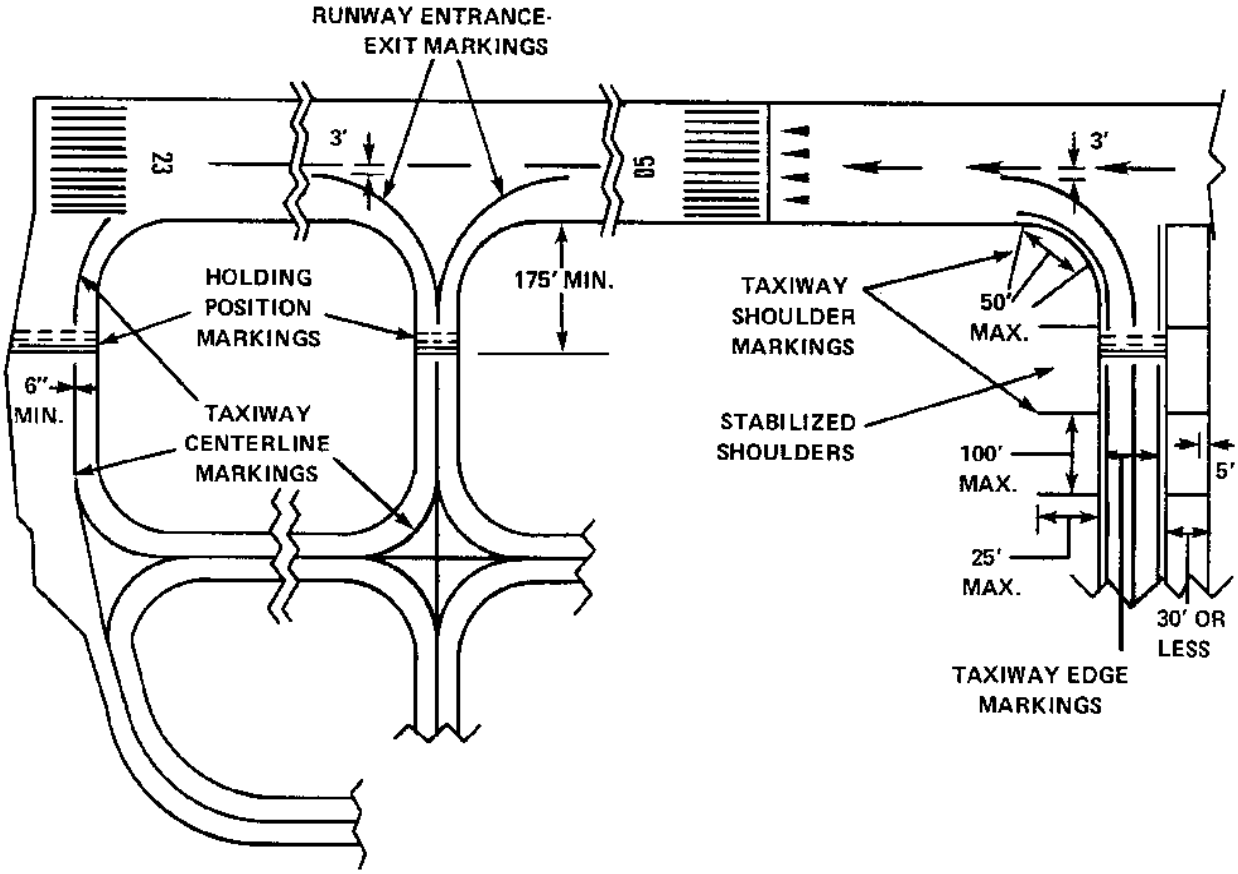

A. AN EXAMPLE OF TAXIWAY MARKINGS LAYOUT

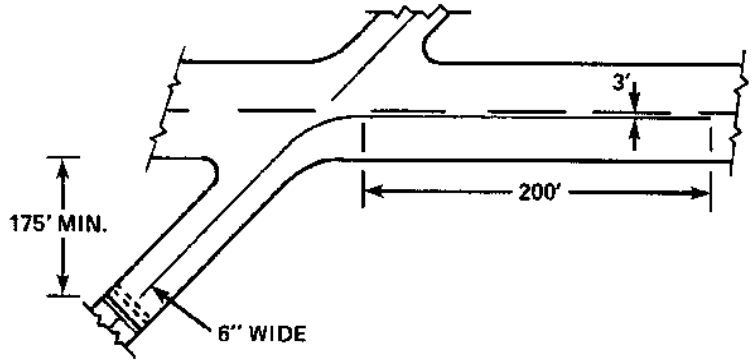

B. DETAILS OF TAXIWAY CENTERLINE AND RUNWAY ENTRANCE-EXIT MARKINGS

Figure 1. Typical configuration of taxiway markings

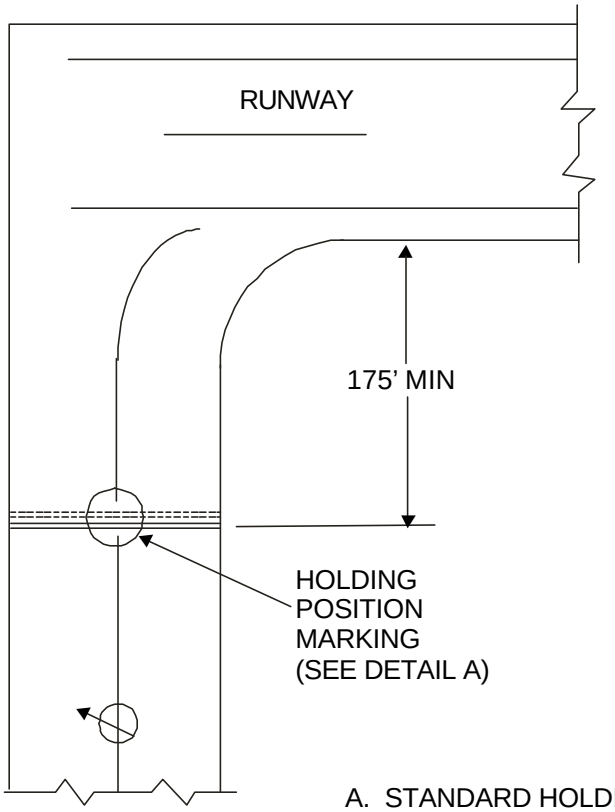

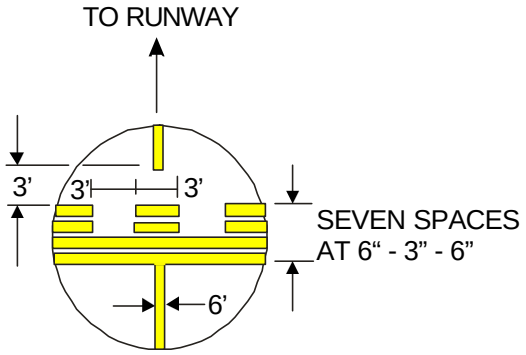

DETAIL A

COLOR: RETROREFLECTIVE YELLOW

A. STANDARD HOLDING POSITION MARKING

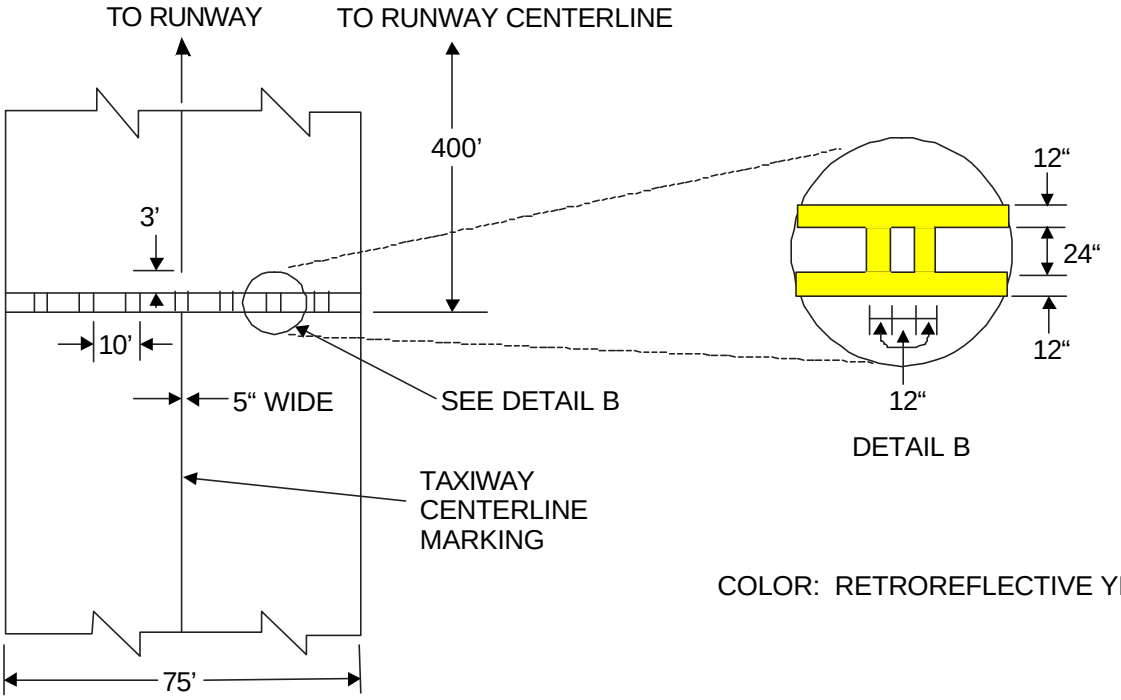

DETAIL B

COLOR: RETROREFLECTIVE YELLOW

B. CATEGORY II HOLDING POSITION MARKING

Figure 2. Holding position markings

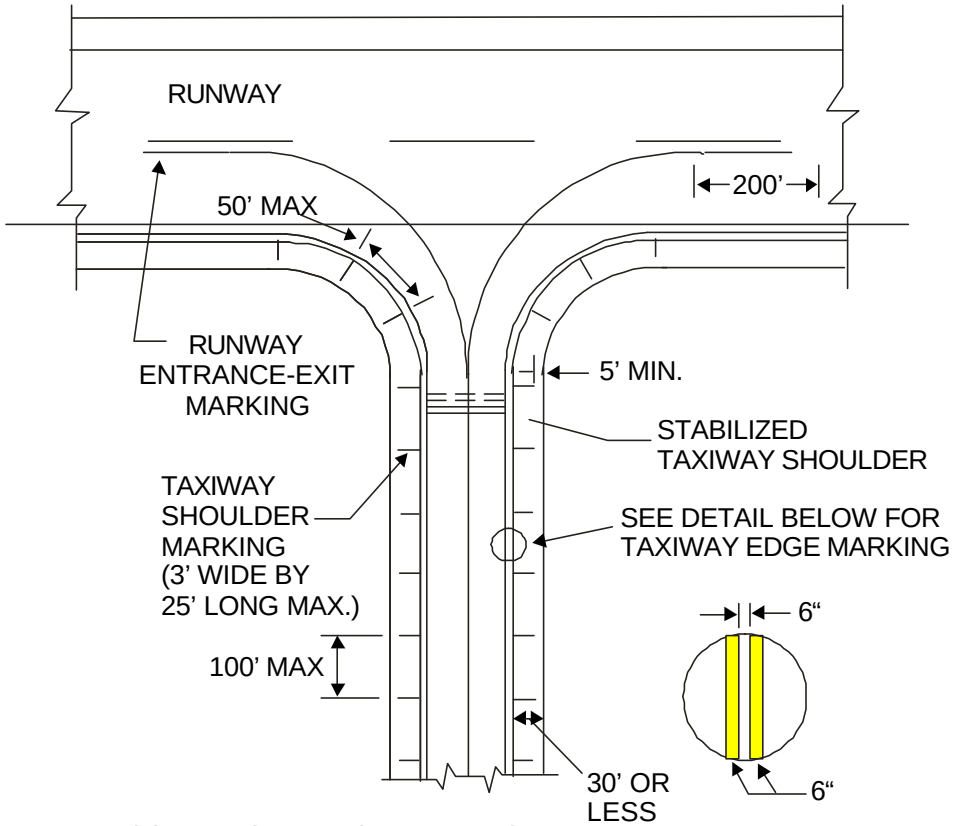

COLOR: EDGE MARKINGS RETROREFLECTIVE YELLOW
SHOULDER MARKINGS NONRETROREFLECTIVE YELLOW

A. TYPICAL TAXIWAY EDGE AND TAXIWAY SHOULDER MARKINGS

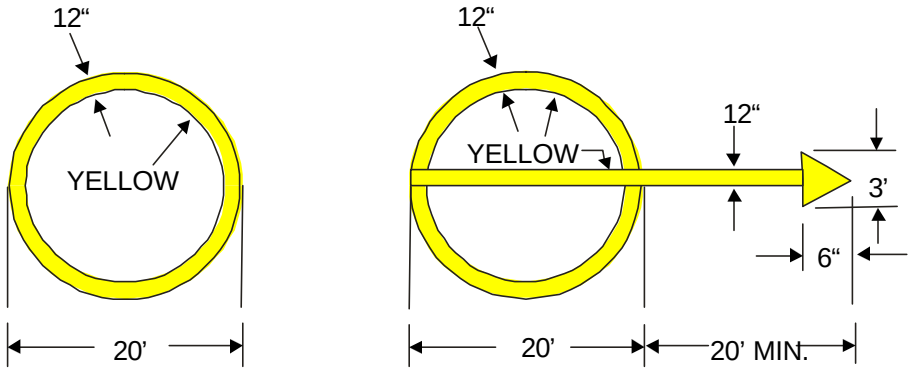

ALIGNMENT IS NOT REQUIRED

DIRECTIONAL ALIGNMENT REQUIRED

COLOR: NONRETROREFLECTIVE YELLOW

B. TACAN CHECKPOINT MARKINGS

Figure 3. Typical edge, shoulder, and TACAN checkpoint markings

curve into the intersecting taxiway to indicate turns which are frequently used in taxiing. On curves or curved sections the markings shall be smooth curves and the minimum distance from the edge of the taxiway shall be not less than one-half the width of the taxiway.

8. HOLDING POSITION MARKINGS.

(See figure 2.) The holding position or clearance markings indicate the minimum safe distance for the taxiing aircraft from the runway when waiting to be cleared for takeoff or to taxi across the runway. The holding position markings shall be retroreflective yellow stripes and shall extend across the entire width of the taxiway. They shall be straight lines perpendicular to the taxiway centerline except at intersections with large areas for aircraft traffic. If this area extends beyond the holding position and the taxiway edge is not clearly defined, the holding position markings may be parallel to the runway centerline. Two types of holding position markings are used. In some cases both types may be installed for a given intersection. The types of holding position markings are:

a. Standard holding position markings.

b. Category II holding position markings.

9. Standard Holding Position Markings.

These holding position markings are used for all taxiway intersections with runways except for runways authorized for Category II operations. These markings are located not less than 175 feet (250 feet preferred) from the runway edge. These markings consist of four parallel stripes, two continuous and two dashed lines, 6 inches wide with the edges of adjacent stripes 6 inches apart (figure 2A).

10. Category II Holding Position Markings.

For those runways authorized for Category II operations (WP002 00), the taxiway intersections shall be provided with Category II holding position markings. These markings shall be located not less than 400 feet from the runway centerline and outside of the critical area for the approach electronic aids. The Category II markings shall consist of two parallel continuous stripes which are 12 inches wide and 24 inches apart and perpendicular to the taxiway together with the double 12-inch wide connecting lines at 10-foot intervals (figure 2B).

11. RUNWAY ENTRANCE-EXIT MARKINGS.

(See figures 1 and 3A.) These markings indicate the paths which are intended for entering onto or exiting from the runways at intersections with taxiways. These markings are extensions of the yellow retroreflective taxiway centerline markings, except where interrupted for runway markings. Some intersections of taxiways with runways may not be intended for runway entrances or exits but have the taxiway centerline continue directly across the runway. Entrance-exit markings are curved continuous stripes beginning at the Point of Tangency (PT) of the taxiway fillet to a PT 36 inches from the near edge of the runway centerline marking. This curve should have the maximum radius which maintains a separation from the taxiway and runway edges not less than one half the width of the taxiway. Beyond the PT near the runway centerline marking, the entrance-exit markings shall continue parallel to the runway centerline marking for not less than 200 feet from the PT. The entrance-exit marking shall be 6 inches wide except for the long-radius exits. For taxiway intersections at the ends of the runway, the entrance-exit making shall terminate in line with the runway edge. For other intersections, the entrance-exit stripe shall be interrupted for the runway side stripes and other runway markings. For long-radius (high-speed) exits, the exit stripe shall be not less than 12 inches wide and shall follow the exit curve.

12. TACAN CHECKPOINT MARKINGS.

If a checkpoint has been established for checking operation of the TACAN navigation equipment before takeoff the designated position shall be marked (see figure 3B). If the checkpoint location has not been established, its position shall be coordinated with NAVELEX. The position should be on the taxiway centerline near the runway threshold, but far enough away from the runway edge for the checkpoint sign (WP005 05) to be outside the holding position area. The center of the TACAN checkpoint marking shall be not less than 262.5 feet from the runway edge. The line-of-sight between the checkpoint and the TACAN antenna shall be clear of obstructions that may affect the transmitted signal. The markings shall be a circle about the checkpoint position. The circle shall be 20 feet in diameter with the marking 12 inches wide. The marking shall be nonretroreflective yellow. When the aircraft is to be aligned in a specific direction towards the transmitter antenna for the check, an arrow shall be provided across the circle through the center on the desired azimuth and extends outside the circle for another 20 feet. This arrow shall be nonretroreflective yellow with the shaft 12 inches wide and the arrowhead 6 feet long and 3 feet wide.

13. TAXIWAY EDGE MARKINGS.

(See figures 1 and 3A.) Taxiway edge markings are installed only where the visual contrast between the edge of the full strength taxiway and the adjoining area is such that pilots may tend to run off the taxiway. These edge markings shall consist of a pair of continuous parallel retroreflective yellow stripes. The stripes shall be 6 inches wide and 6 inches apart with the outer edge of the outer stripe along the edge of the full strength or designated edge of the taxiway. Where used, the edge markings are usually placed along both sides of the taxiway but may be used only in critical areas and do not have to extend the length of the taxiway.

14. TAXIWAY SHOULDER MARKINGS.

Taxiway shoulder markings are used to mark stabilized shoulder areas which are not full strength pavements or where aircraft taxiing is undesirable. In some areas such as stabilized islands in apron areas, along some taxiway curves, or former runways which have had part of the width designated as a taxiway, confusion may occur as to which side of the edge marking is the taxiway, and shoulder markings may be needed. These markings shall be nonretroreflective yellow bars painted on the shoulder surface (see figures 1 and 3A). These bars shall be not less than 3 feet wide and are perpendicular to the taxiway edge beginning at the taxiway edge stripes and extending outboard. The length of the bars shall be 25 feet long or to within 5 feet of the outer edge of the shoulder paving whichever is less. Along straight sections of taxiway, the shoulder marking bars shall be equally spaced not more than 100 feet apart with a bar at the PT of a curve or at the end of the taxiway or of the shoulder paving. On curves the bars shall be equally spaced along the taxiway edge not more than 50 feet apart.

15. HAZARDOUS AREA MARKINGS.

Small hazardous or failed areas of the taxiway shall be marked to assure avoidance by taxiing aircraft. The hazardous area on the traffic side of the taxiway shall be outlined with the pair of parallel retroreflective yellow lines as for the taxiway edge markings. The area shall also be outlined with yellow or orange rectangular flags not less than 18 inches on each side. The flags shall be provided with stiffeners to keep the flags extended in all wind conditions. The hazardous area may also use orange or orange and white cones to outline the area. Flags and cones shall be fastened in position to resist movement from prop or jet blast of taxiing aircraft and the height shall not exceed 30 inches above the pavement.

16. CLOSED TAXIWAY MARKINGS.

Taxiways which have been closed permanently or temporarily shall be marked to indicate visually that the taxiway is closed and not to be used. The closed taxiway markings are nonretroreflective yellow X-shaped crosses (see figure 4). The arms of the cross shall intersect at right angles and shall be not less than 5 feet wide and the overall length not less than 30 feet, except temporary markings may be reduced to 4-foot wide arms to permit use of standard widths of plywood. The marking crosses shall be located at each end of the closed taxiway, at any potential entrance from an intersection with an active runway or taxiway, and at intervals not greater than 1000 feet apart along the closed length of taxiway. The distance of a closed marking cross from the ends of a closed taxiway or from the edges of an intersecting active runway or taxiway shall not exceed 10 feet. For permanently closed taxiways, the taxiway markings shall be removed or obliterated and the yellow crosses painted on the surface. For temporarily closed taxiways the crosses may be painted yellow on the surface or formed by tape or plywood which is secured in place.

17. BORDERS FOR MARKINGS.

For some installations, the taxiway markings and the surrounding pavement do not provide sufficient contrast for easy recognition. In such cases, the contrast can be improved by outlining the markings with a nonglossy black border. The borders shall be not less than 6 inches wide.

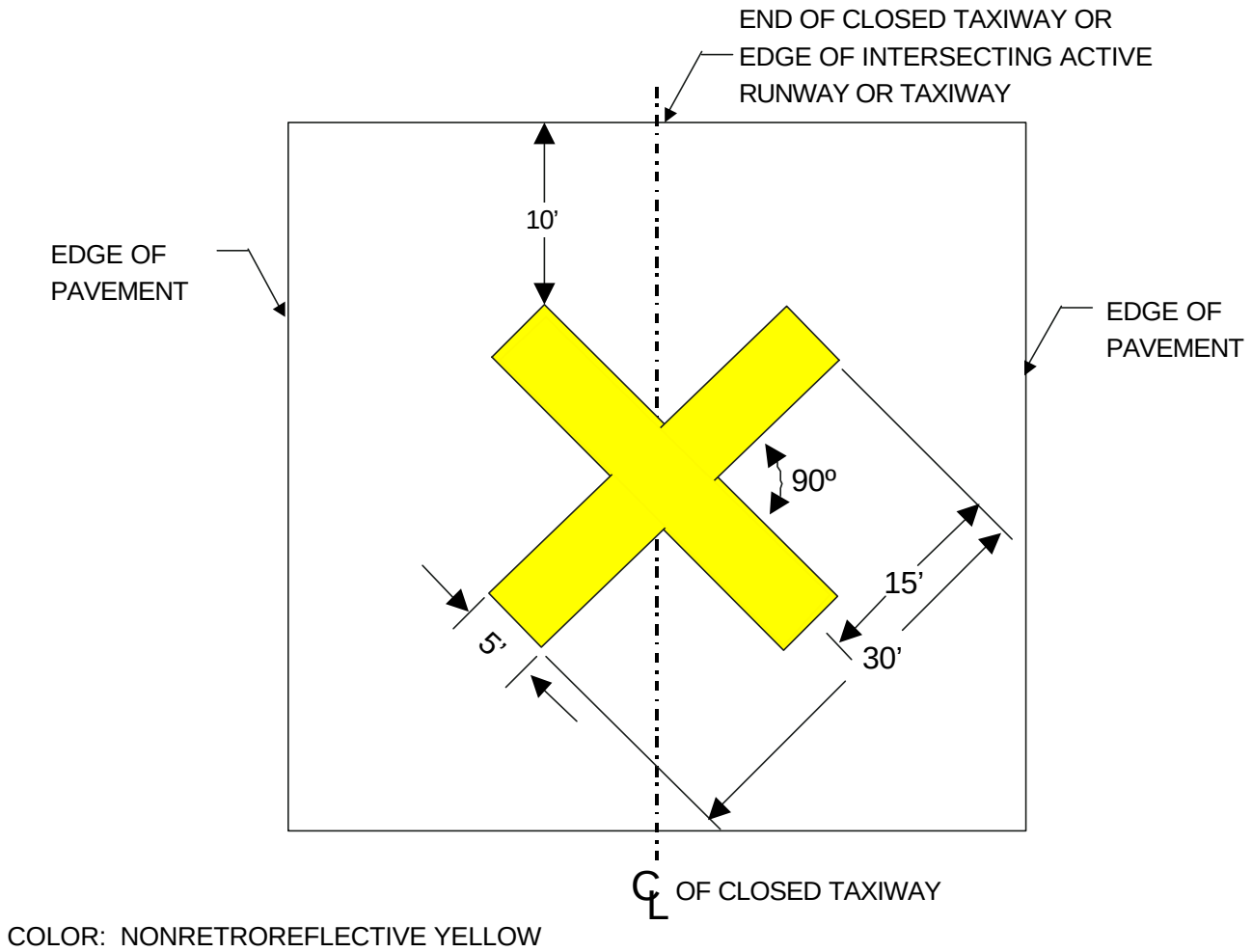

Figure 4. Typical closed taxiway marking

TABLE 1. MATERIALS FOR TAXIWAY MARKINGS

Color of Marking	Federal Specification	Authorized Use
Retroreflective Yellow	~~TT-P-85[1/] or~~ TT-P-1952, paint, FED-STD-595, chip No. 23538, and TT-B-1325 glass spheres, type III, gradation A.	Taxiway centerline, holding position, taxiway edge, runway entrance-exit markings.
Nonretroreflective Yellow	~~TT-P-85[1/] or~~ TT-P-1952 paint, FED-STD-595, chip No. 23538.	Taxiway shoulders, TACAN checkpoint, closed runway markings.
Nonretroreflective Black	~~TT-P-110[1/]~~ Paint, FED-STD-595, chip No. 27038.	Border around yellow or white markings.
Flags, yellow or orange, with stiffeners, local or commercial sources.		
Cones, orange or orange-white, local or commercial sources.		
~~[1/] Some area authorities may prohibit or restrict the use of this type of paint.~~		

18. INSTALLATIONS.

19. INSTALLATION REQUIREMENTS.

For installation details and requirements for taxiway markings, refer to FAA AC 150/5340-1 and FAA AC 150/5370-10. The general requirements are given in paragraphs 5 through 18.

20. PRECEDENCE AT INTERSECTIONS.

Where the taxiway intersects a runway or another taxiway, the taxiway markings shall be interrupted for all runway markings but may intersect the taxiway markings. The taxiway markings shall maintain, by interruption or becoming parallel, a clearance of 36 inches from the runway markings. At intersections with other taxiways, the centerline markings may intersect or curve into directions that taxiing traffic may use. Taxiway edge markings may be interrupted at the edge of the intersecting taxiway or where the edge stripes intersect.

21. RESTRICTIONS.

Regulations of some states, such as California, or other authority may prohibit or restrict the use of solvent base paints. For the yellow markings, ~~this may require using~~**use** type TT-P-1952 ~~instead of type TT-P-85 paint~~. For the slower drying type TT-P-1952 paint, timing of application of the retroreflective beads (spheres) may be required to assure adherence of the beads without sinking too deeply into the paint. ~~Also the~~**Use** black ~~type TT-P-110 paint may not be acceptable, but any~~**for** long-wearing semigloss or flat black paint, such as type TT-P-1952, with black pigment and suitable for the surface may be substituted.

22. MATERIALS.

The materials required for taxiway markings are paint and retroreflective spheres (beads), except for the flags and cones for marking hazardous areas. The approved materials and colors are shown in table 1.

23. PHOTOMETRIC REQUIREMENTS.

The taxiway markings shall be airfield marking paints of the required aviation surface colors. For these refer to FED-STD-595. The specific colors shall be as follows:

a. Yellow, color chip No. 23538,

b. Black, color chip No. 27038.

TECHNICAL MANUAL

TAXIWAY EDGE LIGHTS

SHOREBASED AIRFIELDS

Reference Material

Introduction 002 00
~~Definitive Designs for Naval Shore Facilities ..... NAVFAC P-272~~
High-Intensity Runway Edge Lights (HIRL) 004 05
Runway Exit Lights 004 08
Taxiway Markings 005 01
Taxiway Centerline Markings 005 03
Taxiway Guidance Signs 005 04
Holding Position Signs and Lights for Intersections with Runways 005 06
Taxiway Lights for Runways Used as Taxiways 005 07
Apron and Parking Area Lighting 006 02
Fueling Area Lights 006 05
Electrical Power and Control for Visual Aids 009 00
Auxiliary Power and Power Transfer Equipment 009 01
Constant-Current Regulators 009 02
Isolation and Distribution Transformers 009 03
Airfield Lighting Control Panels 009 05
Special Remote Control Equipment 009 06
Design Drawings for Visual Air Navigation Facilities ..... UFC 3-535-02
~~Airfield Lighting ..... MIL-HDBK-1023/1~~
Aeronautical Ground Light and Surface Marking Colors ..... ICAO, Annex 14, Vol. 1, App. 1
Lights, Airport, Semiflush, General Specifications MIL-T-26202
Specification for Runway and Taxiway Light Fixtures ..... FAA AC 150/5345-46
Isolation Transformers for Airport Lighting ..... FAA AC 150/5345-47

Alphabetical Index

Subject **Page No.**

Aiming 5
Controls 10
Corners 3
Description 2
Equipment 10
Existing Installations 2
Fixtures. 10
General Information. 2
High-Speed Runway Exit Edge Lights 5
Hoods 3
Installation Requirements 3
Installations 3
Intensity Control 10
Justification Requirements. 2
Locations. 3

Long-Radius Exit Edge Lights. 5
Methods Of Installation. 3
Necks in the Taxiway 3
Photometric Requirements. 10
Power. 10
Power And Controls 10
Purpose. 2
Related Facilities 2
Schedule Of Lighting Equipment For Taxiway Edge Lights 7
Spacing Of Edge Lights Along Curved Edges 7
Spacing Of Edge Lights. 3
Spacing Of Lights For Curved Sections. 5
Spacing Of Lights For Straight Sections. 3
Terminating Intersections 5
Tolerances 5

Record of Applicable Technical Directives

None

1. GENERAL INFORMATION.

2. PURPOSE.

This Work Package (WP) contains the requirements for the taxiway edge lights. These lights outline the routes for taxiing to and from the runways, parking areas, fueling area, maintenance areas and other locations. The edge lights in conjunction with the taxiway markings and in some cases taxiway centerline lights provide the visual cues for movement of aircraft on the ground. Taxiway lights are required for operations on airfields at night and during reduced visibility conditions in daytime. Operations in both Visual Flight Rules (VFR) and Instrument Flight Rules (IFR) conditions (WP002 00) shall use edge lights. These requirements are to be used for designing new lighting installations. Existing taxiway lights may be used and maintained until upgrading or replacement is required.

3. JUSTIFICATION REQUIREMENTS.

All taxiways that are intended for operations at night shall be equipped with edge lights. Any variations from these requirements shall be approved in accordance with the procedures of WP002 00.

4. RELATED FACILITIES.

The taxiway edge lights are the basic visual aids for use of taxiways at night. Other visual aids related to the taxiway edge lights are:

a. Taxiway markings (WP005 01),

b. Taxiway centerline lights (WP005 03),

c. Taxiway guidance signs (WP005 04),

d. Holding Position Signs and Lights for Intersections with Runways (WP005 06),

e. Taxiway Lights for Runways Used as Taxiways (WP005 07),

f. Runway Exit Lights (WP004 08),

g. Runway Edge Lights (WP004 05),

h. Apron and Parking Area Lighting (WP006 02),

i. Fueling Area Lights (WP006 05).

5. DESCRIPTION.

6. The taxiway edge lights shall consist of lines of blue lights located along each edge of the taxiway. Some yellow lights are used at some types of taxiway intersections. Elevated lights are normally used, except in areas where these lights may be a hazard to aircraft. Then semiflush lights may be used. These elevated lights may be equipped with hoods to block out emitted light in directions not necessary to taxiing to reduce the “sea-of-blue” effect and at airfields where “tone-down” of light is required for security. The edge light circuits should be sectionalized to permit selection of routes for taxiing rather than operate the entire taxiway edge light system simultaneously. Because taxiing routes may

have curves, turns, and intersections requiring choices of the desired routes and presenting changes in appearance of the path, these edge lights may not be equally spaced along the entire route.

7. INSTALLATIONS.

8. INSTALLATION REQUIREMENTS.

For installation details for the taxiway edge lights refer to ~~MIL-HDBK-1023/1 and NAVFAC P-272~~**UFC 3-535-02**. General design and installation requirements are given below.

9. METHODS OF INSTALLATION.

The elevated lights may be mounted on light bases or on conduits in concrete foundations. All elevated lights shall be mounted on frangible couplings. The height of elevated lights shall be not more than 14 inches above the taxiway edge except in areas with frequent accumulations of snow to depths of 12 inches or more where with approval by Naval Air Systems Command the maximum height shall not exceed 24 inches. To raise the height of these lights, use longer nipples and, if necessary, longer cables from the connections of the isolation transformers to the lamp. The manufacturer may be able to supply these items. The semiflush lights shall be installed on light bases and should be used only in areas where aircraft or service vehicles are likely to damage an excessive number of elevated lights or if elevated lights are a hazard to aircraft. The taxiway shoulders may be stabilized or unpaved as required for the types of operating aircraft.

10. LOCATIONS.

The taxiway edge lights shall be located in rows and curves not more than 5 feet outside of the full strength or marked edge of the taxiway. The preferred location is 2 feet from the taxiway edges or edge stripes. The lights along each side shall be the same distance from the taxiway in straight lines or smooth curves. For each section of taxiway the lights shall be uniformly spaced except at the ends of sections where additional lights may be required. These additional lights are used to make a gradual transition to the change in spacing or to prevent an inoperative light in a line across a taxiway from appearing as a possible continuation of the taxiway. At intersections with runways or where runways or sections of runways are used as taxiways, the taxiway edge lights shall be not less than 2 feet farther from the runway edge than is the line of runway edge lights. The edge lights may be omitted if a taxiway guidance sign, (WP005 04), which is visible from either location, is installed within 5 feet of the location for the light.

11. SPACING OF EDGE LIGHTS.

The spacing of taxiway edge lights ~~should~~ **shall** prevent two adjacent lights from appearing as lights on opposite sides of the taxiway, even if a single light fails. For better spacing of lights, the taxiway is divided into sections and the spacing between lights is determined independently for each section. In each section the lights shall be equally spaced, but additional lights may be installed in the end spaces to provide a gradual change in spacing. The light(s) at the end of a section is usually considered as a light in each adjoining section. The taxiway may be divided into additional sections for more effective spacing but these points shall be the ends of sections.

a. Each Point of Tangency (PT), corner, change in width of taxiway, and end of taxiway,

b. At the narrowest point, if the edges form a neck across the taxiway,

c. Changes from two parallel edges to a single edge or to one non-parallel edge,

d. The point of intersection of the extended centerline with the line of edge lights across the end of the taxiway terminating at an intersection.

12. SPACING OF LIGHTS FOR STRAIGHT SECTIONS.

The lights shall be equally spaced within each taxiway section except where extra lights are added in the end spaces of a section. Where the taxiway edges are parallel, the spacing on each side of the section shall be the same length. Thus, any reason for using another section of lights on one side shall have a similar section on the other side. For straight sections of taxiway, the spacings of edge lights shall be as follows:

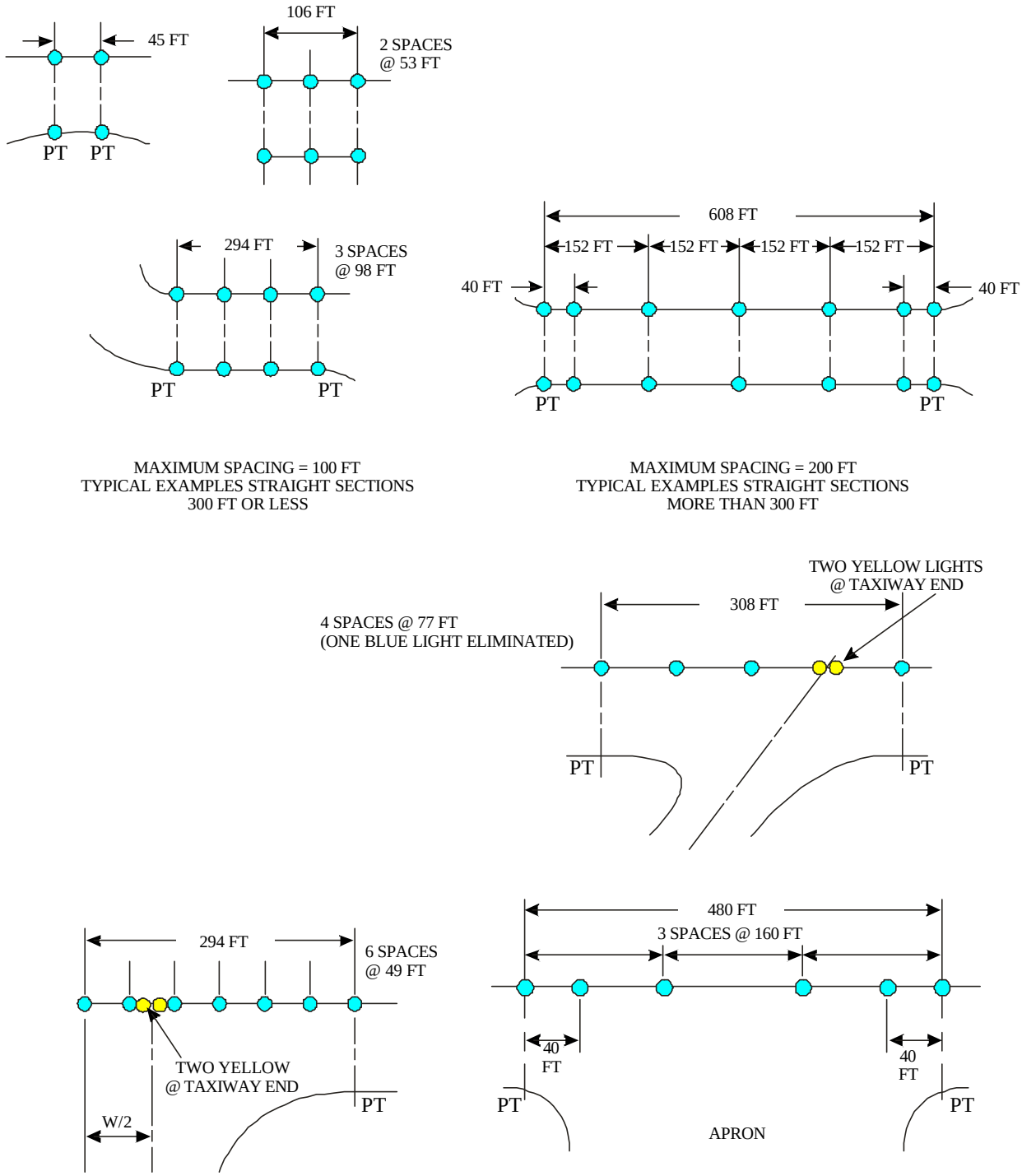

Figure 1. Examples of edge light spacings for straight sections of taxiway

a. Parallel Edges More than 300 Feet in Length. The spacing between lights shall be not more than 200 feet. In each of the end spaces on each side of the taxiway, an additional light shall be installed 40 feet from the end of the section. The lights on opposite sides of the taxiway shall be a pair on a line perpendicular to the taxiway centerline. If for some reason it is not practical to install a light at the desired position, the pair of lights may be moved not more than 5 feet along the taxiway. If displacement of more than 5 feet is necessary, the section for spacing should be divided into two or more sections. Examples for spacing of lights in these sections are shown in figure 1A.

b. Single or Parallel Edges 300 Feet or Less in Length. The lights in these sections shall be spaced equally at not more than ~~50~~ **100** feet. If the section has parallel edges, the lights on opposite sides of the taxiway shall be in pairs on lines perpendicular to the taxiway centerline. Examples of spacings for these sections are shown in figure 1B.

c. Single Edges More Than 300 Feet in Length. The spacings between lights shall be not more than 100 feet. In each end space an extra light shall be installed 40 feet from the end of the section. Examples of spacings for these sections are shown in figure 1C.

13. SPACING OF LIGHTS FOR CURVED SECTIONS.

For curved edges, each edge is considered as a separate section even for turns with concentric arcs or for fillets of similar radii at intersections. The sections are between PTs except where a neck in the taxiway is formed. The lights shall be placed along a smooth arc for the section (see figure 2). The maximum spacing or chord between lights varies with the radius of the arc as shown in table 1; however, the lights in each section shall be equally spaced. The light at the PT may be replaced with a taxiway guidance sign. If the curve forms a neck in the taxiway, the arc is divided into two sections with one end at the narrowest point of the taxiway (see figure 2C). The opposite side of the taxiway shall also have section ends at the narrow point of the taxiway. The lights at the neck mark the minimum clearance of the taxiway in the area. At intersections of taxiways with runways, the taxiway edge lights shall be not less than two feet outside the line of runway edge lights (see figure 2B).

14. TERMINATING INTERSECTIONS.

If a taxiway intersects but does not cross another taxiway, the edge lights should define this condition. The edge lights across the end of the terminating taxiway shall have a section ending where the extended centerline intersects the line of edge lights across the end (see figure 2C). Instead of a single blue light at the end of these sections, the taxiway centerline termination is marked by a pair of yellow omnidirectional lights located in the line of edge lights not more than 5 feet from the intersection. **The lights shall be spaced 1.5 ft apart.** The yellow lights at the extended centerline indicates that the taxiway does not continue in that direction. Where a taxiway makes a turn and the outside edge is formed by a corner instead of an arc, the spacing of lights at the corner shall be handled as for taxiways terminating at the intersection.

15. Long-Radius Exit Edge Lights.

The edge lights for long-radius (high-speed) runway exits (WP004 08) shall be standard locations except the spacing between lights shall be not more than 50 feet, whether for curves or straight sections, until reaching the area where normal taxiing speeds are expected. Elevated edge lights shall be used in addition to the centerline exit lights.

16. TOLERANCES.

The preferred location for spacing of the lights is within 6 inches of the equal interval spacing. However, if it is not possible to install lights at the desired location, the lights may be located not more than 5 feet from the equal spacing location. The tolerance from the designated line or smooth curve for locating the lights is ±6 inches.

17. AIMING.

Taxiway edge lights are usually omnidirectional lights with the elevation angle of the beam fixed by the lens. The only aiming required is leveling of the light when it is installed. However, if hoods are used to shield off emitted light, the hoods shall be installed to direct the light along and towards the taxiway. Lights along curves, fillets, and at intersections may require larger distribution angles of light or not permit the use of hoods. If hooks are used, they shall be securely fastened to prevent rotation by jet or prop blast.

TAXIWAY EDGE LIGHT

NOTE: FOR SPACINGS OF Z1 AND Z2, SEE TABLE 1.

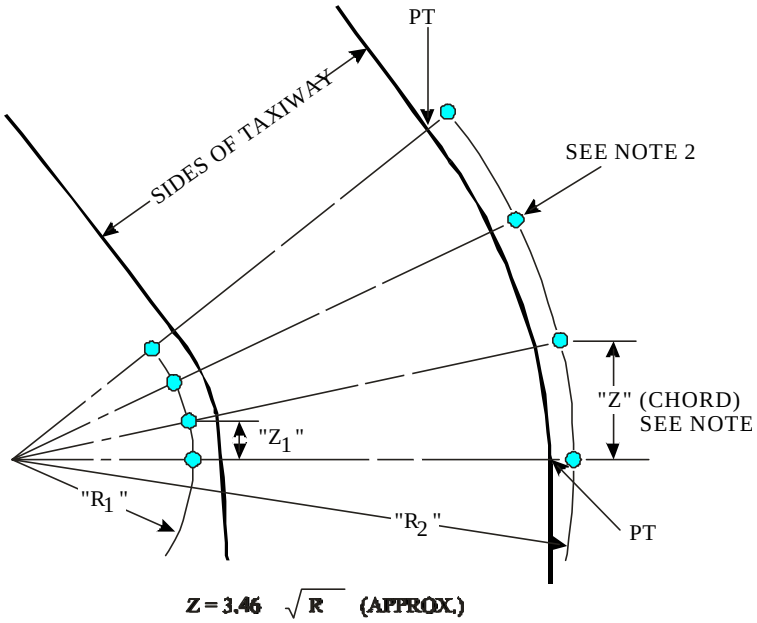

A. TURN WITH CONCENTRIC EDGES

TAXIWAY EDGE LIGHT

RUNWAY EDGE LIGHT

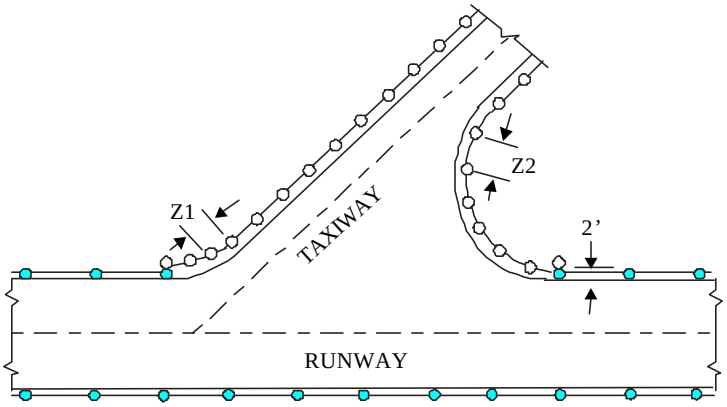

A. FILLETS AND RUNWAY INTERSECTION

BLUE TAXIWAY EDGE LIGHT

YELLOW TAXIWAY EDGE LIGHT

LIGHT AT END OF SECTION

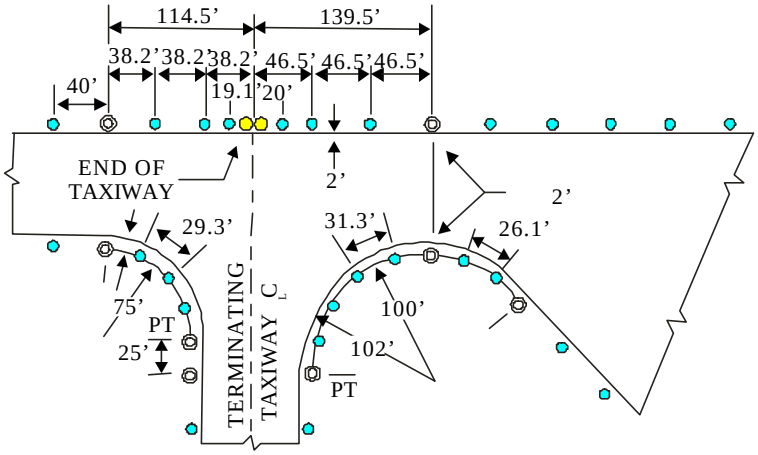

C. NECK IN TAXIWAY AND TERMINATING INTERSECTION

Figure 2. Examples of edge light spacings for curves, arcs, necks, and terminating intersection

TABLE 1. SPACING OF EDGE LIGHTS ALONG CURVED EDGES

Radius of Arc (feet)	Maximum Length of Chord Between Lights (feet)	Radius of Arc (feet)	Maximum Length of Chord Between Lights (feet)
25 or less	17.3	300	60
50	24.5	400	69
75	30.0	500	77
100	34.5	600	85
150	42.5	700	91.5
200	49	800	98
250	55	Over 835	100

NOTES: For radii not listed, interpolate for maximum length of the chord.

On all arcs greater than 30 degrees, there shall be not less than three lights including those at the PTs.

TABLE 2. SCHEDULE OF LIGHTING EQUIPMENT FOR TAXIWAY EDGE LIGHTS

Purpose Type of Fixture	Lamp Rating and Type	Isolation Transformer	
		Rating	FAA Type AC150/5345-47
Elevated lights, omnidirectional, blue, type is optional.[1/]			
FAA AC 150/ 5345-46, type L-861T, mode 1	45W 6.6A,[2/] type as determined by manufacturer.	30/45W 6.6/6.6A	L-830-1
Hoods or shields, types as provided by manufacturer or from commercial sources.			
Semiflush lights, omnidirectional, blue.			
FAA AC 150/ 5345-46, type L-852E, mode 1, with blue filter, or yellow as required. ~~or~~	6.6A, watts and type as determined by manufacturer.	~~45~~~~100~~W 6.6/6.6A	L-830-4

[1/] Number of lights required varies with taxiway length and spacing.

[2/] 45W lamps are used for systems with intensity control. If intensity control is not provided, use 30W lamps.

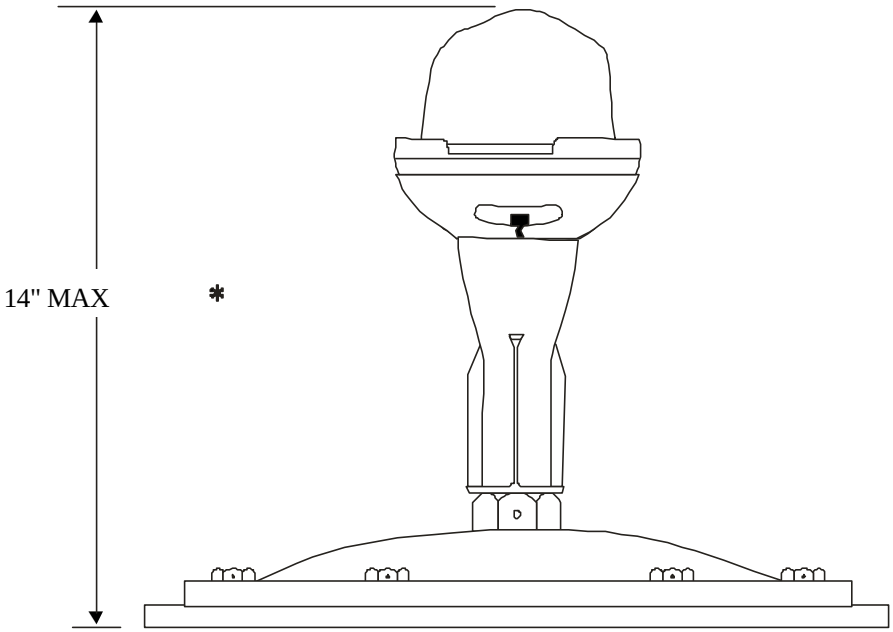

DIMENSIONS ARE FOR REFERENCE ONLY

LIGHT: ELEVATED, 45W 6.6A, FAA AC 150/5345-46, TYPE L-861T, BLUE

LAMP: 45W, 6.6A, TYPE AS DETERMINED BY MANUFACTURER

GLOBE: BLUE

ISOLATION TRANSFORMER: 30/45W 6.6/6.6A,
FAA AC 150/5345-47, TYPE L-830-1

MOUNTED ON FRANGIBLE COUPLING, MAY BE EITHER ON LIGHT BASE OR CONDUIT.

*** NOTE: IN AREAS OF DEEP ACCUMULATIONS OF SNOW, THE HEIGHT MAY BE A MAXIMUM OF 24 INCHES.**

Figure 3. Typical elevated taxiway edge light, FAA L-861T

FIXTURE: FAA AC 150/5345-46,
TYPE L-852E, MODE 1, 45W 6.6A.

LAMP: 45W, 6.6A, TYPE AS REQUIRED
BY THE MANUFACTURER.

FILTER: AVIATION BLUE OR YELLOW.

ISOLATION TRANSFORMER: 30/45W 6.6/6.6A,
FAA AC 150/5345-47, TYPE L-830-1

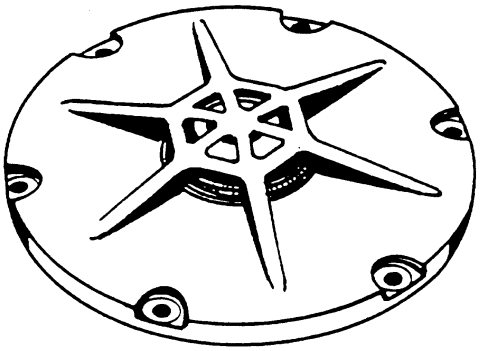

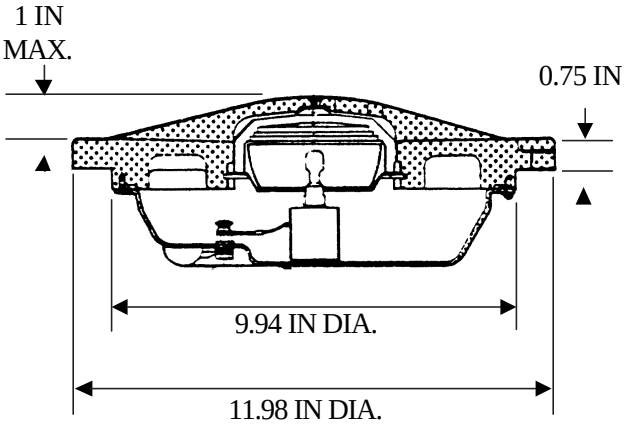

DIMENSIONS ARE FOR REFERENCE ONLY

Figure 4. Typical semiflush taxiway edge lights

18. EQUIPMENT.

19. FIXTURES.

The light fixtures are usually the elevated type, but where needed, semiflush lights may be used. The fixtures and equipment to be used are listed in table 2 and shown in figures 3 and 4. The use of hoods for shielding is optional.

20. PHOTOMETRIC REQUIREMENTS.

The emitted light from the taxiway edge light fixtures shall be omnidirectional in azimuth. The color, in accordance with ICAO, Annex 14, Vol. 1, App. 1, shall be aviation blue except at termination centerlines which shall be aviation yellow. Two or three steps of intensity shall be provided with the lowest step not more than ten percent of the rated intensity. The intensity for these elevated lights shall be not less than 2 candelas for vertical angles between 0 and 6 degrees above the horizontal and not less than 0.2 candelas at all other angles above horizontal. The intensity of the semiflush lights shall be not less than 2 candelas for vertical angles between 1 and 8 degrees above horizontal, except a reduction of 25 percent is allowed for not more than six structural ribs.

21. POWER AND CONTROLS.

22. POWER.

The electrical power for the taxiway edge lights shall be provided by one or more 6.6-ampere series circuits (WP009 00). The constant-current regulators shall have three or five intensity steps (WP009 02). The lights shall be connected to the primary series circuit by individual series-series isolation transformers (WP009 05). The edge lights for taxiways providing access to and from instrument runways shall be provided with emergency power (WP009 01). This emergency power shall be equipped to automatically transfer power in less than 15 seconds after failure of primary power.

23. CONTROLS.

The taxiway edge lights shall be remotely controlled from the airfield lighting control panel (WP009 05) in the air traffic control tower with an alternate control station in the lighting control vault. Two or three steps of intensity control shall be provided with the intensity at the lowest setting not more than 10 percent of the intensity at rated current. Most airfields shall have provisions for illuminating selected taxiway routes between the aircraft's position and commonly used destinations. This control is usually provided by circuit selector switches (WP009 06), and may use a facsimile type control panel for ease in selecting the taxi route. Capability of energizing all taxiway edge lights simultaneously should be provided.

TECHNICAL MANUAL

TAXIWAY CENTERLINE LIGHTS

SHOREBASED AIRFIELDS

Reference Material

Introduction 002 00
~~Definitive Designs for Naval Shore Facilities ..... NAVFAC P-272~~
Approach Visual Aids 003 00
Runway Exit Lights 004 08
Taxiway Markings 005 01
Taxiway Edge Lights 005 02
Taxiway Guidance Signs 005 04
Holding Position Signs and Lights for Intersections with Runways 005 06
Apron and Parking Area Lighting 006 02
Electrical Power and Control for Visual Aids 009 00
Auxiliary Power and Power Transfer Equipment 009 01
Constant-Current Regulators 009 02
Isolation and Distribution Transformers 009 03
Airfield Lighting Control Panels 009 05
Special Remote Control Equipment 009 06
~~Airfield Lighting ..... MIL-HDBK-1023/1~~
Design Drawings for Visual Air Navigation Facilities ..... UFC 3-535-02
Aeronautical Ground Light and Surface Marking Colors ..... ICAO, Annex 14, Vol. 1, App. 1
Lights, Airport, Semiflush, General Specifications MIL-T-26202
Specification for Runway and Taxiway Light Fixtures ..... FAA AC 150/5345-46
Isolation Transformers for Airport Lighting ..... FAA AC 150/5345-47

Alphabetical Index

Subject **Page No.**

Aiming 3
Controls 6
Criteria for Spacing of Taxiway Centerline Lights 6
Description 2
Equipment 3
Existing Installations 2
Fixtures. 3
General Information. 2
High-Speed Runway Exit Lights 3
Installation Requirements 3
Installations 3
Intensity Control 6
Intensity Requirements for Taxiway Centerline Lights 8
Justification Requirements. 2
Locations. 3
Long-Radius Exit Lights 3
Methods Of Installation. 3

Photometric Requirements. 3
Power. 6
Power And Controls 6
Purpose. 2
Related Facilities 2
Schedule Of Lighting Equipment For Centerline Lights 7
Spacing Of Lights 3
Tolerances 3

Record of Applicable Technical Directives

None

1. GENERAL INFORMATION.

2. PURPOSE.

This Work Package (WP) contains the requirements for the taxiway centerline lights. These lights provide accurate alignment and course guidance for taxiing aircraft especially in areas where better definition is required than that provided by the edge lights. This accurate guidance is required for operations in very low visibility conditions and may be needed to supplement the taxiway edge lights in problem areas. Possible problem areas are complex intersections, turns, curves, and wide taxiways. Taxiway centerline lights may be required for operations at night and during reduced visibility conditions in daytime. These requirements are to be used for designing new lighting installations. Existing centerline lights may be used and maintained until upgrading or replacement is required.

3. JUSTIFICATION REQUIREMENTS.

Taxiway centerline lights shall be installed for the complete taxiway system providing taxiing routes to and from runways authorized or planned for operations in Category III Instrument Flight Rules (IFR) conditions (WP002 00). These lights are recommended for taxiway systems providing taxiing routes to and from runways authorized for operations in Category II IFR conditions. The centerline lights shall be installed at all complex intersections and other areas where taxiway edge lights do not provide adequate taxiing guidance, especially for taxiways to and from IFR runways. These problem areas are often identified by operating experience. Any variations from the requirements of this WP shall be approved in accordance with the procedures of WP002 00.

4. RELATED FACILITIES.

The centerline lights provide better guidance but the edge lights are the basic visual aids for use of taxiways at night because of the lower cost for installations and maintenance. Other visual aids related to the taxiway centerline lights are as follows:

a. Taxiway markings (WP005 01),

b. Taxiway edge lights (WP005 02),

c. Taxiway guidance signs (WP005 04),

d. Holding Position Signs and Lights for Intersections with Runways (WP005 06),

e. Runway Exit Lights (WP004 08),

f. Apron and Parking Area Lighting (WP006 02).

5. DESCRIPTION.

6. The taxiway centerline lights shall consist of a line of green bidirectional or unidirectional semiflush lights located along the axis of the taxiway. Taxiway edge lights are usually installed along the edges of the taxiways where centerline lights are used; however, centerline lights may be installed in areas where it is not practical to use edge lights. Because taxiing routes have curves, turns, and intersections requiring choices of the desired routes along the path, these centerline lights are not uniformly spaced along the entire route but shall be divided into sections, and the spacing is determined independently for each section. The lights shall be equally spaced within a straight or curved section, but the maximum spacing varies with the shape and length of the section and the minimum visibility condition authorized for operations on the associated runway. The light at the end of a taxiway section is usually considered as a light in both adjoining sections. Although the taxiway may be divided into additional sections if needed for more effective operations, the taxiway shall have not less than the following sections for spacing lights:

a. Between Points of Tangency (PT),

b. Between PT and holding position or end of taxiway,

c. Between holding position and end of taxiway,

d. Between PT and 100 feet beyond PT if holding position or runway end is more than 300 feet from PT,

e. Between the PT and intersection of centerline or extended centerline at taxiway intersections.

7. INSTALLATIONS.

8. INSTALLATION REQUIREMENTS.

For installation details for the taxiway centerline lights refer to ~~MIL-HDBK-1023/1 and NAVFAC P-272~~**UFC 3-535-02**. General design and installation requirements are given below.

9. METHODS OF INSTALLATION.

The semiflush lights shall be base-mounted or direct-mounted (inset) in the pavement. The preferred method is base-mounted but direct mounting may be used for existing taxiways.

10. LOCATIONS.

The taxiway centerline lights shall be located in a straight line along the taxiway centerline or on smooth curves between the PT (see figures 1 and 2). On straight sections the preferred location is on the taxiway centerline, but the line may be offset a maximum of two feet to avoid construction problems such as joints in the pavement. If these lights are offset, the offset shall be uniform and continuous along the same side of the taxiway. On turns and curves in the taxiway, the lights shall be located on a smooth arc along the taxiway centerline or, if the lights are offset, maintain the offset distance from the centerline. At simple intersections for direct crossing or turning in one direction only, the lights may be located along the extended centerline across or to the intersection with the centerline of the intersecting taxiway. At complex intersections with more than one direction for turns or for taxiways to Category II or III runways these lights shall be located along smooth arcs between PT with the maximum radius that provides a clearance from the inside taxiway edge not less than one-half the width of the narrower taxiway for all turns usually permitted. If turns and crossings are permitted, lights shall be installed along all paths. At intersections with runways, the taxiway centerline lights shall terminate at the runway edge except for the long-radius (high-speed) runway exit lights or low-speed exit lights (WP004 08) are required. For taxiing paths which permit taxiing in one direction but not in the reverse direction, unidirectional lights shall be used. For crossing taxiways the light at the intersection of centerlines shall be an omnidirectional green light.

11. SPACING OF LIGHTS.

The lights shall be equally spaced within each section not to exceed the criteria of table 1.

12. TOLERANCES.

The tolerance for spacing of the lights is ±6 inches. However, if it is not possible to install lights at the desired location, usually the lights may be relocated not more than 2 feet from the normal location. The tolerance from the line or smooth curve is ±3 inches.

13. AIMING.

Taxiway centerline lights are usually bidirectional lights with fixed elevation angles of the beams. When installing the base or junction box, it shall be level and at the correct distance below the surface of the pavement and aligned in azimuth for the axes of the beams to be parallel to the taxiway centerline along straight sections and tangential to the arc along curved sections.

14. EQUIPMENT.

15. FIXTURES.

The light fixtures are the semiflush type. Narrow-beam lights are used along straight sections, and wide-beam lights are used along curves and at PT. The equipment for these centerline lights shall be as listed in table 2. Typical examples of these lights are shown in figure 3.

16. PHOTOMETRIC REQUIREMENTS.

The emitted light from the taxiway centerline light fixtures shall be bidirectional in azimuth, except at some intersections where unidirectional lights are required. The color of the emitted light shall be aviation green in accordance with ICAO, Annex 14, Vol. 1, App. 1. Not less than three progressive steps of intensity shall be provided with the lowest step not more than ten percent of the rated intensity. The intensity and beamspread of each beam for these lights at rated current shall be as required in table 3.

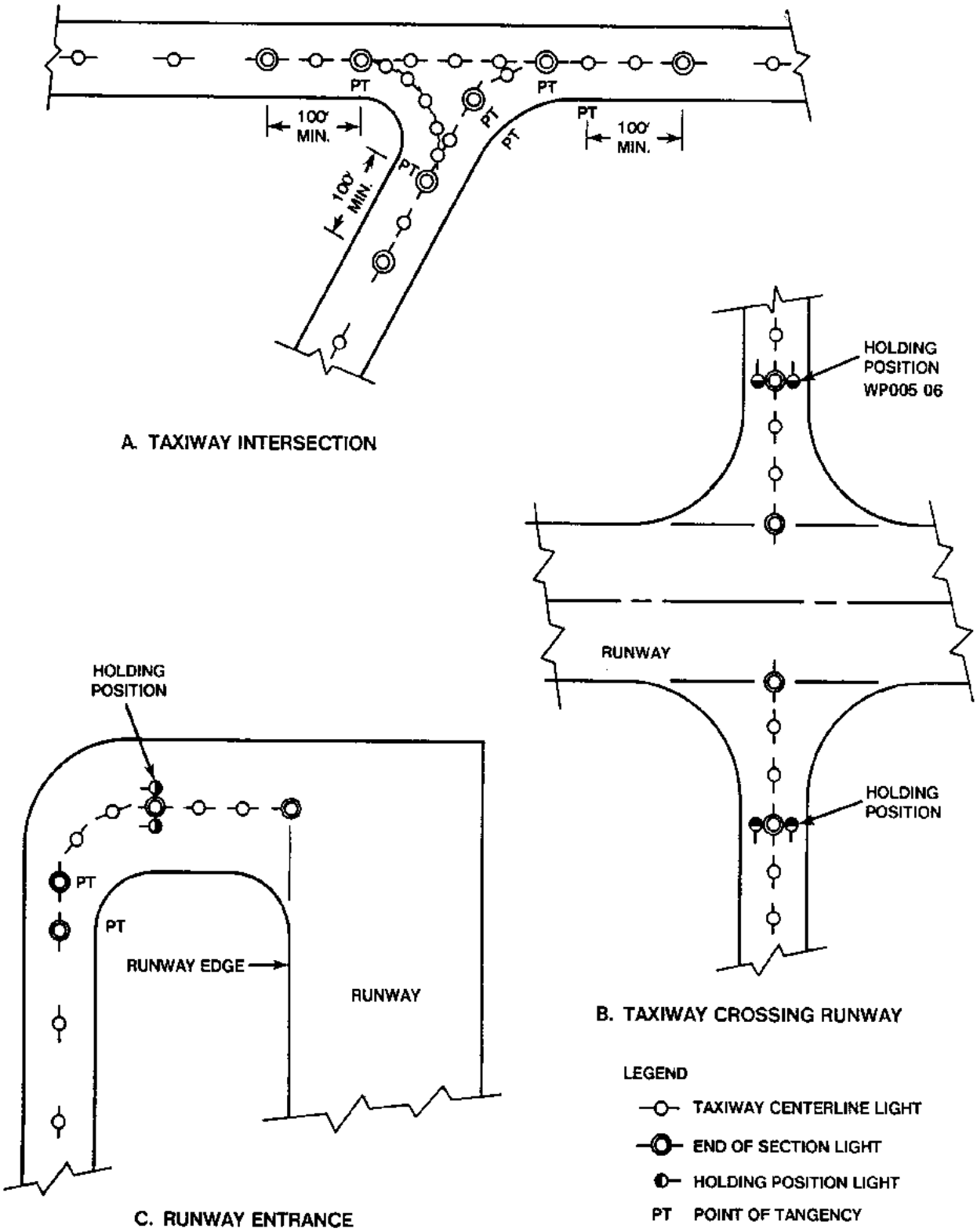

Figure 1. Examples of layouts for taxiway centerline lights

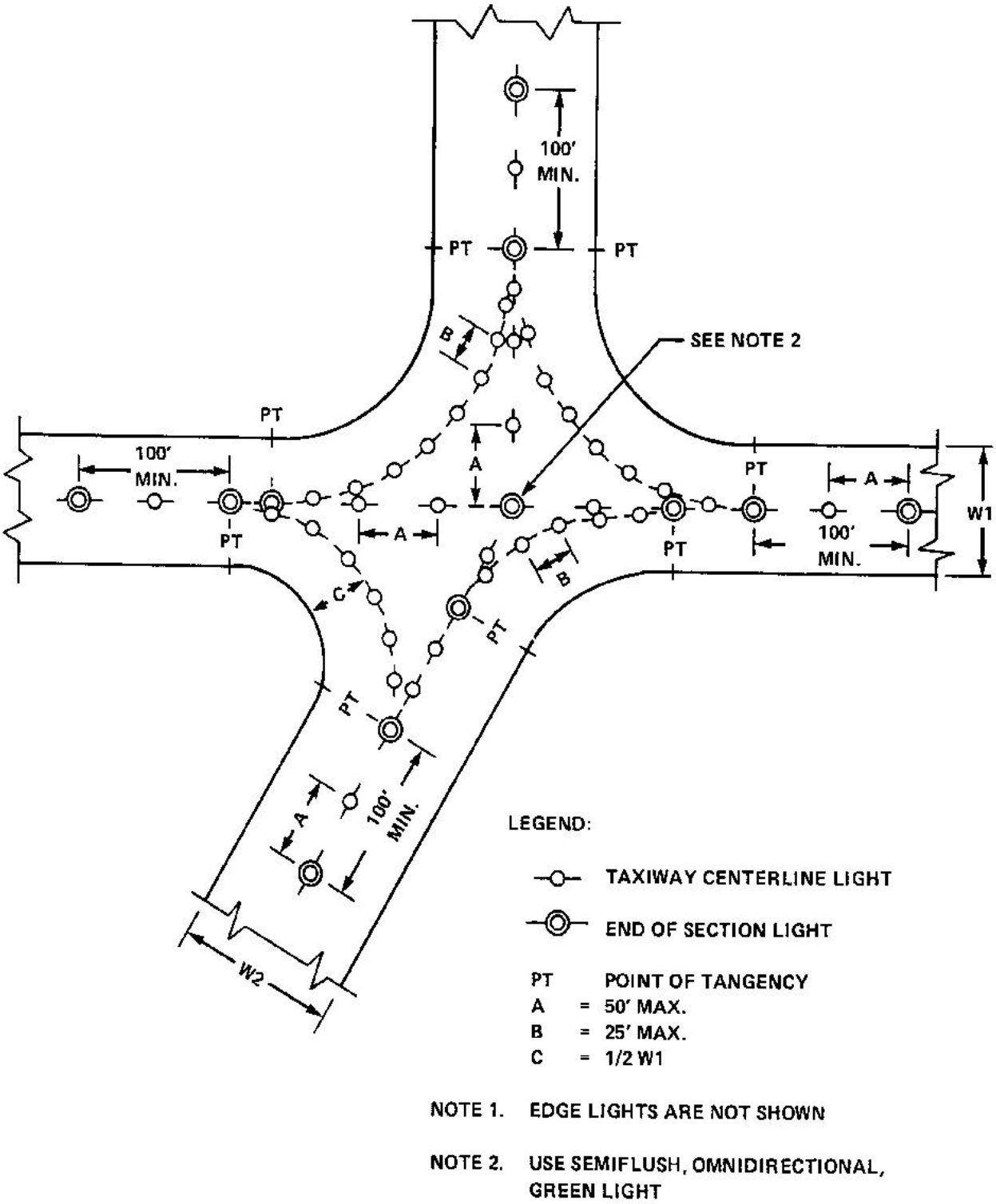

Figure 2. Typical taxiway centerline lights for a complex intersection

TABLE 1. CRITERIA FOR SPACING OF TAXIWAY CENTERLINE LIGHTS

Type of Section	Maximum Spacing (feet)	
	Category II or III Runways	All Other Conditions
Straight sections, 300' or longer	50	100
Straight sections, less than 300' or at intersections	50	50
Curves, radius less than 400'	12.5	25
Curves, radius 400' to 1200'	25	50
Curves, radius more than 1200'	50	100

NOTES:

1. Locate lights at PT, holding position, and taxiway end. Space the other lights equally for each section not to exceed the above criteria.

2. Continue these lights for not less than 100 feet beyond the PT of the centerline lights or of the PT at the taxiway edge, whichever is greater.

17. POWER AND CONTROLS.

18. POWER.

The electrical power for the taxiway centerline lights shall be provided by one or more 6.6-ampere series circuits. The constant-current regulators shall have three or five intensity steps (WP009 02). The lights shall be connected to the primary series circuit by individual series-series isolation transformers (WP009 05). These lights may be on independent circuits or connected in series with the taxiway edge lights. The centerline lights for taxiways providing access to and from instrument runways shall be provided with emergency power (WP009 03). This emergency power shall be equipped to automatically transfer power in less than 15 seconds after failure of primary power.

19. CONTROLS.

The taxiway centerline lights shall be remotely controlled from the airfield lighting control panel (WP009 05) in the air traffic control tower panel with an alternate control station in the lighting control vault. These controls may be separate from or combined with the taxiway edge light controls. Three steps of intensity control shall be provided with the intensity at the lowest setting not more than 10 percent of the intensity at rated current. Normally the airfield shall provide circuits for illuminating selected taxiing routes between the aircraft's position and commonly used destinations. This control is usually provided by circuit selector switches (WP003 06), and may use a facsimile type control panel for ease in selecting the taxi route. It may be desirable to provide capability for energizing all taxiway centerline and edge lights simultaneously.

TABLE 2. SCHEDULE OF LIGHTING EQUIPMENT FOR CENTERLINE LIGHTS

Purpose[2/] Type of Fixture	Lamp Rating and Type	Isolation Transformer[1/] Rating	Isolation Transformer[1/] FAA Type AC150/5345-47
Semiflush, bidirectional, green lights, for straight sections of regular taxiways.			
FAA AC 150/ 5345-46, type L-852A, Mode 1, 45W 6.6A	45W 6.6A, type as determined by manufacturer.	30/45W 6.6/6.6A	L-830-1
Semiflush, bidirectional, green lights, for curved sections of regular taxiways.			
FAA AC 150/ 5345-46, type L-852B, Mode 1, 65W 6.6A	65W 6.6A, type as determined by manufacturer.	65W 6.6/6.6A	L-830-3
Semiflush, bidirectional, green lights, for straight sections of taxiways for Cat III runways.			
FAA AC 150/ 5345-46, type L-852C, Mode 1, 6.6A	6.6A, 45W, type as determined by manufacturer.	30/45W 6.6/6.6A	L-830-1
Semiflush, bidirectional, green lights, for curved sections of taxiways for Cat III runways.			
FAA AC 150/ 5345-46, type L-852D, Mode 1, 6.6A	6.6A, 65W, type as determined by manufacturer.	65W 6.6/6.6A	L-830-3
Semiflush, omnidirectional, green lights, for centerline intersections.			
FAA AC 150/ 5345-46, type L-852E or F, Mode 1, 6.6A	6.6A, 115W to 150W, type as determined by manufacturer.	100W 6.6/6.6A or 200W 6.6/6.6A	L-830-4 L-830-6

[1/] Number of lights required varies with taxiway length and spacing.

[2/] If needed, unidirectional lights of the same type may be obtained.

LIGHT: SEMIFLUSH, BIDIRECTIONAL OR UNIDIRECTIONAL, FAA AC 150/5345-46 TYPE L-852A, B, C, OR D, AS DETERMINED FOR NARROW-BEAM, WIDE-BEAM, OR CATEGORY III.

LAMP: 6.6A, WATTS AND TYPE AS DETERMINED BY MANUFACTURER.

FILTERS: AVIATION GREEN, TYPE AS DETERMINED BY MANUFACTURER.

ISOLATION TRANSFORMER: 6.6/6.6A, FAA AC 150/5345-47, WATTS AS DETERMINED BY MANUFACTURER. TYPE AS DETERMINED FOR THE WATTS.

COLOR OF EMITTED LIGHT IS AVIATION GREEN.

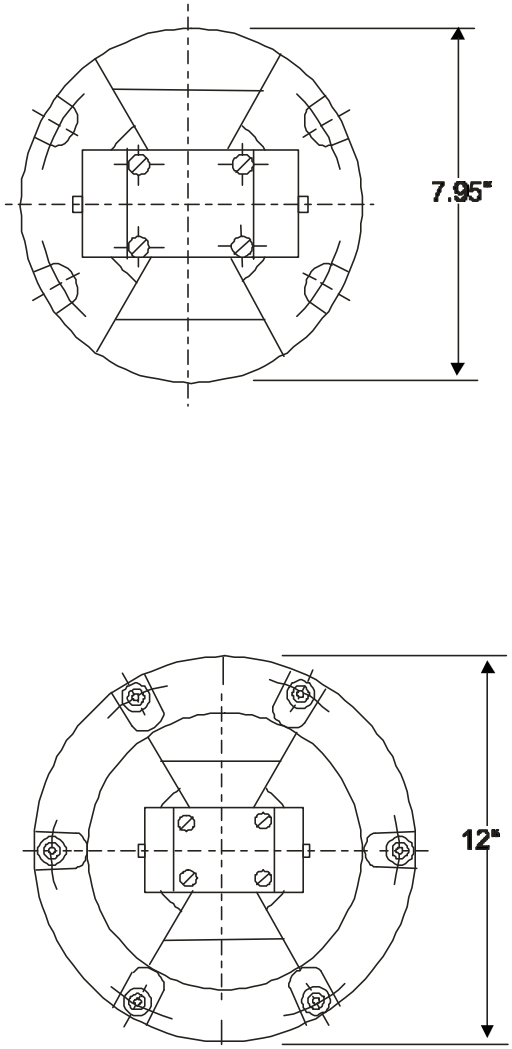

Figure 3. Typical taxiway centerline light fixtures

TABLE 3. INTENSITY REQUIREMENTS FOR TAXIWAY CENTERLINE LIGHTS

Type of Light	Minimum Average Intensity of Main Beam, Green (candelas)	Minimum Beamspread Coverage (degrees)			
		Main Beam		At 10 Percent of Rated Intensity	
		Horizontal	Vertical	Horizontal	Vertical
L-852A	20	±10	1 to 4	±16	0.5 to 10
L-852B	20	±30	1 to 4	±30	0.5 to 10
L-852C	200	±3.5	1 to 8	±4.5	0 to 13
L-852D	100	±30	1 to 10	±30	0 to 15
L-852E	25	360	1 to 8	-	-
L-852F	100	360	1 to 10	-	-

TECHNICAL MANUAL

TAXIWAY GUIDANCE SIGNS

SHOREBASED AIRFIELDS

Reference Material

Introduction 002 00
Runway Exit Lights 004 08
Taxiway Markings 005 01
Taxiway Edge Lights 005 02
Taxiway Centerline Lights 005 03
Holding Position Signs and Lights for Intersections with Runways 005 06
Taxiway Lights for Runways Used as Taxiways 005 07
Colors FED-STD-595
Apron and Parking Area Lighting 006 02
Fueling Area Lights 006 05
Electrical Power and Control for Visual Aids 009 00
Isolation and Distribution Transformers 009 03
Design Drawings for Visual Air Navigation Facilities ..... UFC 3-535-02
~~Airfield Lighting ..... MIL-HDBK-1023/1~~
Aeronautical Ground Light and Surface Marking Colors ..... ICAO, Annex 14, Vol. 1, App. 1
Specification for Taxiway and Runway Signs ..... FAA AC 150/5345-44
Isolation Transformers for Airport Lighting ..... FAA AC 150/5345-47

Alphabetical Index

Subject **Page No.**

Alignment. 7
Commonly Used Terms for Signs 4
Controls 7
Description 2
Destination Signs 4
Equipment 7
Existing Installations 2
Fixtures. 7
General Information. 2
Holding Position Signs 2
Informational Signs 2
Installation Requirements 4
Installations 4
Intensity Control 7
Justification Requirements. 2
Location Signs 4
Locations. 7
Mandatory Signs 2
Methods Of Installation. 4
Photometric Requirements. 7
Power. 7

Power And Controls..... 7
Purpose. 2
Related Facilities..... 2
Runway Exit Signs 4
Schedule Of Lighting Equipment For Taxiway Guidance Signs 9

Record of Applicable Technical Directives

None

1. GENERAL INFORMATION.

2. PURPOSE.

This Work Package (WP) contains the requirements for the taxiway guidance signs. These signs assist pilots in following the desired route for taxiing to destinations rapidly and safely with a minimum number of radio contacts to ground control. These signs supplement the guidance provided by the taxiway edge lights or centerline lights. This information shall be provided for aircraft operations both day and night in all visibility conditions. These requirements are to be used for designing new taxiway guidance sign installations. Existing sign installations may be used and maintained until upgrading or replacement is required.

3. JUSTIFICATION REQUIREMENTS.

Taxiway guidance signs shall be installed only when additional guidance to that provided by the taxiway lights and markings is needed for rapid and safe taxiing. The justification for installing these signs depends on the complexity of the taxiway system and the arrangement of runways, parking, and service areas. Because these signs, if lighted, are connected to the taxiway lighting circuits on an individual basis, the sign system may be installed in stages and added to as the need is determined by operating experience. Some airfields without runway or taxiway lights may need to install a limited system of unlighted signs. Any variations from the requirements of this WP shall be approved in accordance with the procedures of WP002 00.

4. RELATED FACILITIES.

Taxiway guidance signs are associated with the use of other visual aids as follows:

a. Taxiway markings (WP005 01),

b. Taxiway edge lights (WP005 02),

c. Taxiway centerline lights (WP005 03),

d. Holding Position Signs and Lights for Intersections with Runways (WP005 06),

e. Runway Exit Lights (WP004 08),

f. Runways used as taxiways (WP005 07),

g. Apron and Parking Area Lighting (WP006 02),

h. Fueling area lights (WP006 05).

5. DESCRIPTION.

6. The taxiway guidance signs shall consist of a system of individual signs along the taxiways, runway exits, and apron areas. These signs shall be internally or externally illuminated if the taxiways are lighted, but the information shall be similarly presented when not lighted for daytime operations. Unlighted signs intended for daytime operations only may be used. These signs may be single faced for observing from one direction only or double faced for observing from either side when taxiing in opposite directions (figure 1). The information on the opposite faces of the signs is usually different. Three types of guidance signs are used to provide information to pilots. They are FAA Type L-858Y (Direction, destination and boundary) - black legend on a yellow background; FAA Type L-858L (Location signs) - yellow legend on a black background; and FAA Type L-858R (Mandatory instruction) - white legend on a red background. The mandatory signs involve messages which if not obeyed could involve a hazard to aircraft or violation of security areas. The messages may be such as “NO ENTRY” or “STOP”. Holding position or clearance signs (WP005 06) are also this type. The informational signs provide instruction that may be needed but often is optional.

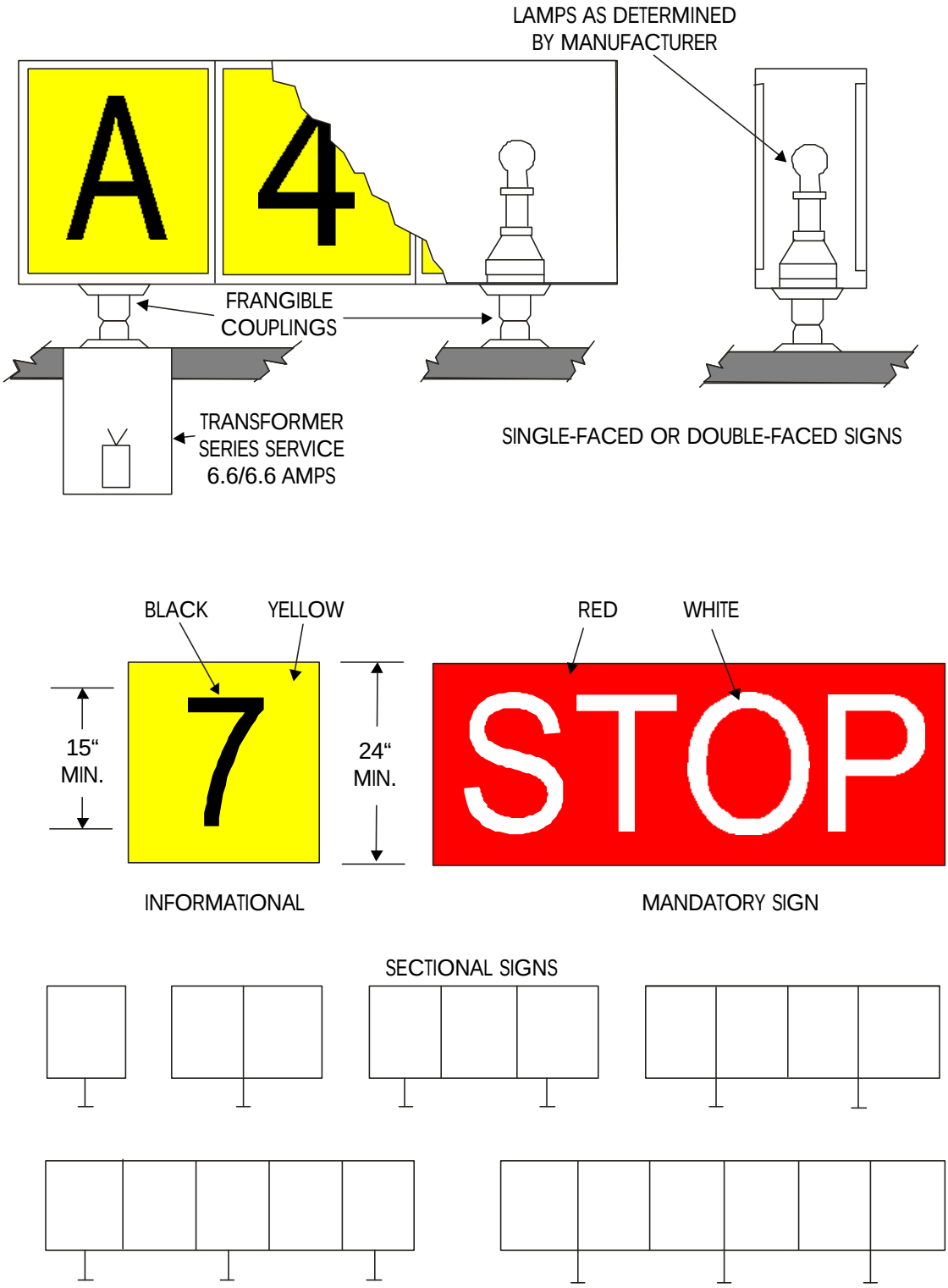

Figure 1. Taxiway guidance signs

NOTE

See FAA Advisory Circulars AC 150/5345-44 and AC 150/5340-18 for additional guidance.

The shape of the letters and numerals shall be similar to those shown in figure 2 with the height not less than 15 inches and the stroke width not less than 2.35 inches. These informational signs are identified by purpose as destination signs, location signs, and runway exit signs. Destination and runway exit signs usually include an arrow to indicate direction. Location signs may identify the taxiway (usually by a letter), frequently used checkpoints, or destinations. The information which must be brief may consist of the following or combinations of the following:

a. Short words,

b. Abbreviations,

c. Contractions,

d. Runway numbers,

e. Letters,

f. Numbers,

g. Arrows to indicate direction, especially right, left, straight ahead, and 45 degrees,

h. A hyphen to separate terms,

i. A dot to separate destinations,

j. A blank to separate words, etc.

Other symbols or terms that are generally understood and will not be misinterpreted may be used. Some commonly used short words or terms are as follows:

a. ACP — Altimeter checkpoint,

b. CARGO — Freight or cargo handling areas,

c. CIVIL — Civilian areas of joint use airfields,

d. FUEL — Refueling area,

e. GATE — Position for aircraft to load or unload passengers,

f. HGR — Hangar areas,

g. (Runway Number) — Holding positions at intersection with runway,

h. INST — Clearance holding position for electronic approach aids during Instrument Flight Rules (IFR) conditions,

i. INTL — International areas,

j. MIL — Military areas of joint use airports,

k. OPS — Operations area,

l. PARK — Aircraft parking only,

m. RAMP — General parking, servicing, and loading areas,

n. RUNUP — Run-up areas,

o. TACAN — TACAN checkpoint,

p. VSTR — Visitors area.

7. INSTALLATIONS.

8. INSTALLATION REQUIREMENTS.

For installation details for the taxiway guidance signs, refer to ~~MIL-HDBK-1023/1~~**UFC 3-535-02**. General design and installation requirements are given below.

9. METHODS OF INSTALLATION.

The guidance signs shall be mounted on frangible couplings on stable concrete foundations. Concrete piers under each support or a continuous foundation may be used. The isolation transformers or power adapters may be placed in light bases or handholes. For airfields in areas with frequent occurrences of snow accumulations of more than six inches, it may be desirable to obtain approval by Naval Air Systems Command to raise the height of the guidance signs. The additional height should be kept to the minimum acceptable to reduce the aircraft strike hazard and limit the increased wind loading and blast forces. As the overall height is increased, the signs must be located further from the taxiway edges (see LOCATIONS of this WP). Raising the signs will require longer nipples and may require longer cables to the terminal strips or connectors of the signs. Before procurement or arranging for installation, check with the manufacturer for adequate strength of the fixtures and any special mounting requirements.

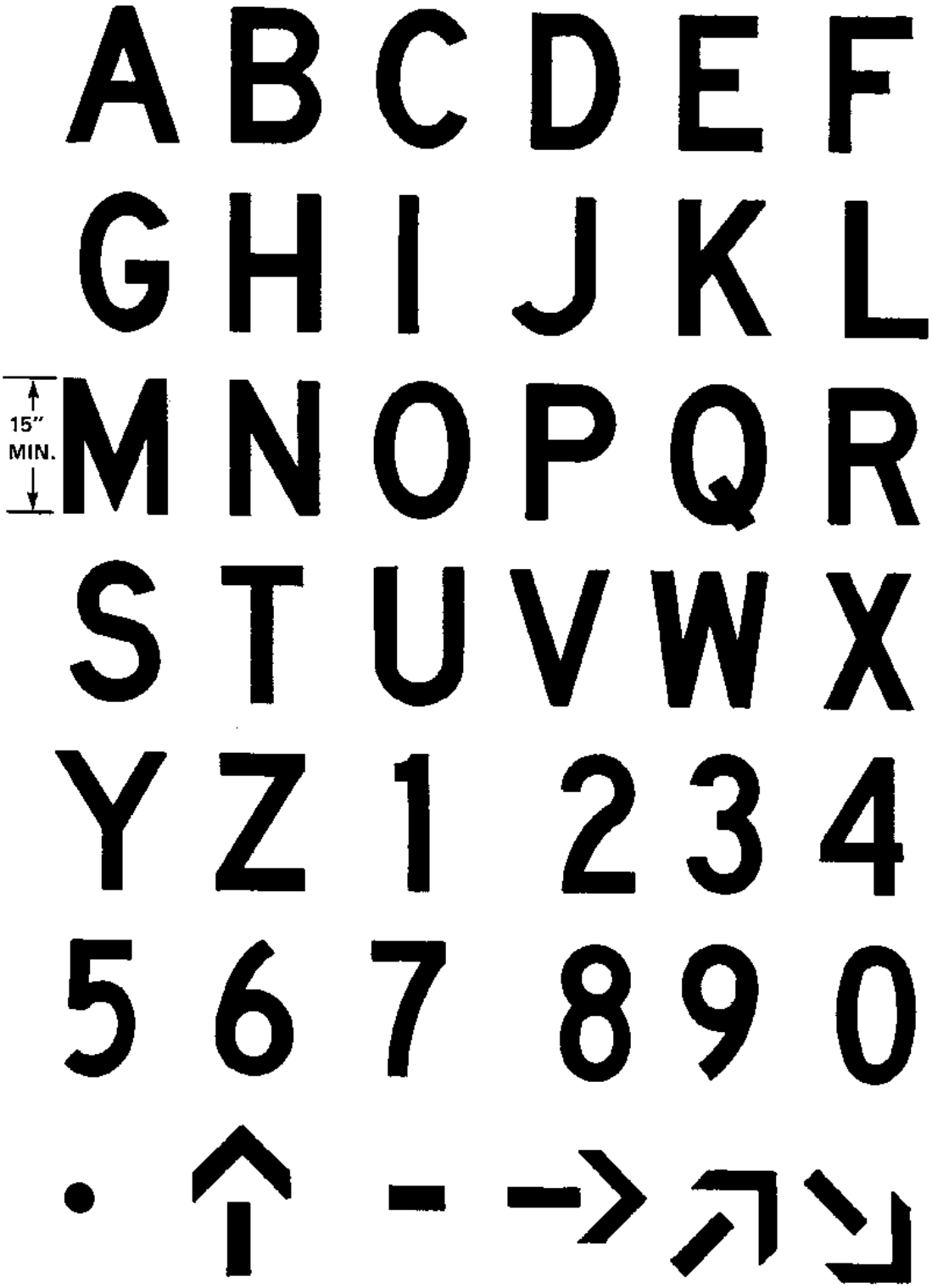

Figure 2. Typical letters, numbers, and symbols for taxiway guidance signs

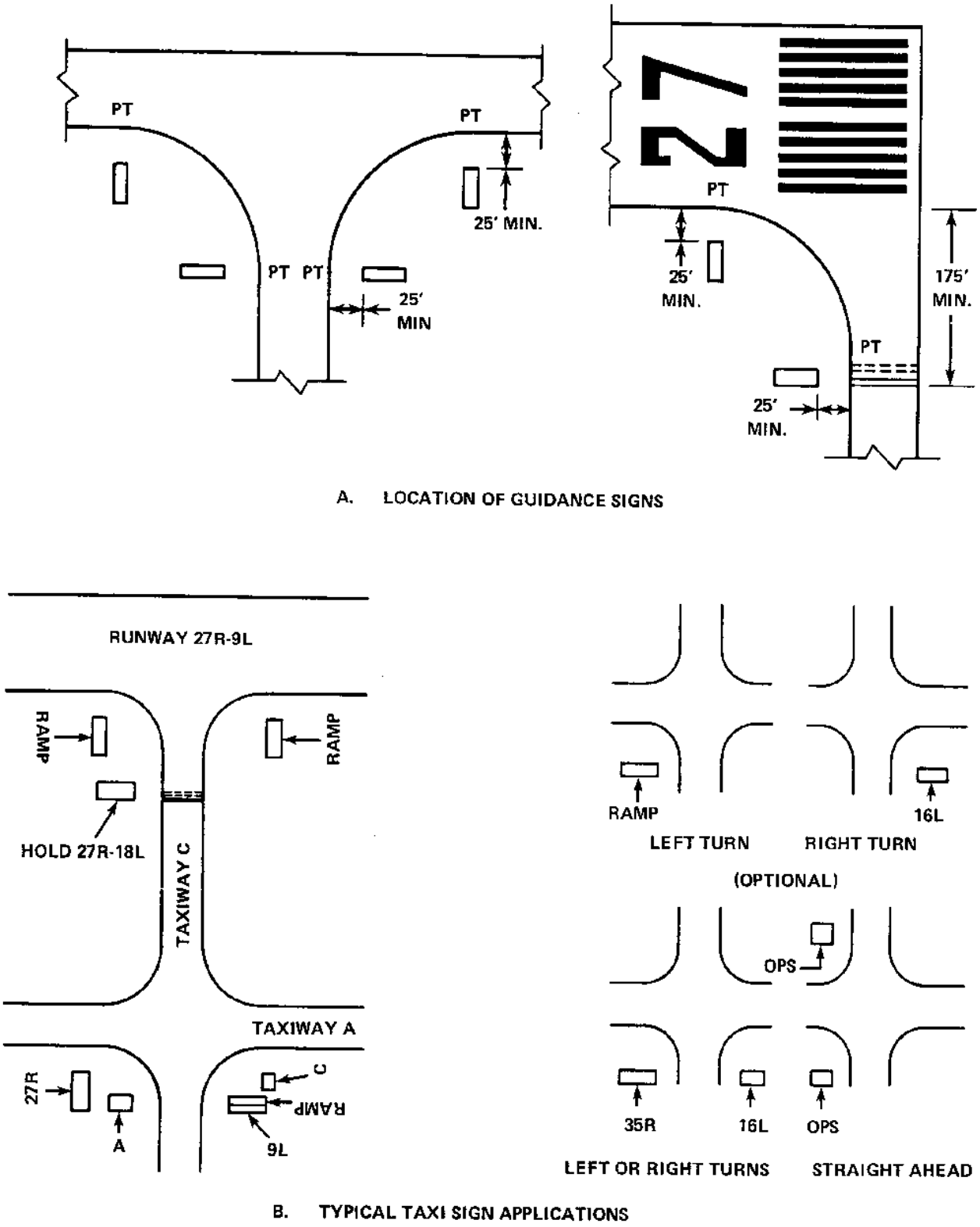

Figure 3. Typical locations and siting for taxiway guidance signs

10. LOCATIONS.

The configuration for locating taxiway guidance signs is not a standardized system but varies with the arrangement of taxiways, runways, apron, and service areas. To design the guidance sign system, all potential taxiing routes shall be considered and coordinated with airfield ground control personnel. The legends for the signs and their location should be determined in the design study. The signs shall be located (figure 3A) not less than 25 feet from the edge of the full strength pavement of the taxiway, runway, or apron. The height of signs shall be not more than 24 inches above the edge of the pavement if located 25 feet from the edge. Signs with height 30 inches above the pavement edge shall be not less than 35 feet from the edge of the pavement. Signs are usually located on the radius of the fillet through the point of tangency (PT) at the required distance from the taxiway or runway edge. Mandatory signs shall be located on the left-hand side or on both sides of the taxiway (figure 3B). Destination signs and runway exit signs indicating turns should be located on the near side of the intersection on the side of the taxiway or runway to which the turn is made (figures 3 and 4). Destination signs with arrows pointing straight ahead may be located on either side of the taxiway, preferably on the approach side to the intersection. Location signs without direction arrows should be located on the left side of the taxiway (figures 3 and 4).

11. ALIGNMENT.

Taxiway guidance signs shall be installed in a vertical position with the face or horizontal axis perpendicular to the centerline of the taxiway or runway and aimed toward the direction from which the sign is observed. Some special signs (WP005 05) may require a different alignment. If a double-face sign is approached from directions other than directly opposite, the alignment of the faces should provide equal observing angles for each face.

12. EQUIPMENT.

13. FIXTURES.

Taxiway guidance signs shall be lightweight and mounted on frangible couplings to reduce damage if struck by an aircraft. The faces of the signs may be vertical or curved. The signs may be in sections with a character on each section or formed as message units. If the taxiway is used for nighttime operations, the signs shall be internally illuminated, but the message shall appear similar in shape and color as signs for daytime operations. The illumination may be furnished by a lamp in each section of the sign or other lighting arrangement that provides clearly lighted characters. The equipment for these signs shall be as listed in table 1. Typical examples of these lights are shown in figure1 and 5.

14. PHOTOMETRIC REQUIREMENTS.

Taxiway guidance signs, when not lighted, shall be white legends on red background for mandatory signs and black legends on yellow background for informational signs. These colors shall be in accordance with FED-STD-595 as follows:

a. Red, color chip No. 21105,

b. Yellow, color chip No. 23538,

c. White, color chip No. 27875,

d. Black, color chip No. 27038.

The emitted light from the lighted signs at night shall be aviation white on aviation red or black on aviation yellow in accordance with ICAO, Annex 14, Vol. 1, App. 1. The surface of the signs with the sections for each color shall be uniformly illuminated. These signs, day or night in 3000-foot meteorological visibility, shall be discernible at distances not less than 800 feet and shall be clearly legible at not less than 500 feet.

15. POWER AND CONTROLS.

16. POWER.

The electrical power for the taxiway guidance signs shall be provided by the 6.6-ampere series circuits (WP009 00) for the associated taxiway edge or centerline lights. The lamps of the signs shall be connected to the primary series circuit by the required number and rating of series-series isolation transformers (WP009 03). If required by the manufacturer, a power adapter shall be provided. Emergency power shall be the same as that required for the associated taxiway edge or centerline lights.

17. CONTROLS.

The taxiway guidance signs shall be controlled by the controls for the associated taxiway edge or centerline lights. Intensity control is not desirable, but if it is provided for the taxiway lights, the illumination of the sign at the lowest intensity setting shall be not less than 50 percent of the illumination at rated current.

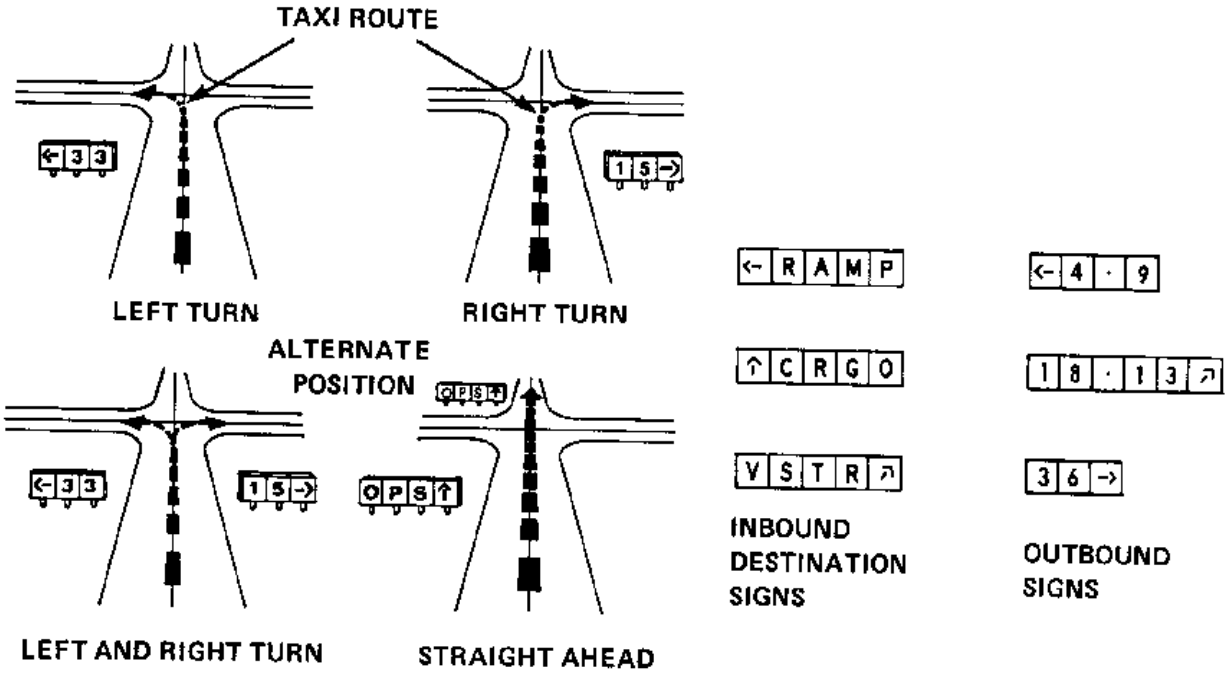

A. PLACEMENT OF DESTINATION SIGNS

B. TYPICAL DESTINATION SIGNS

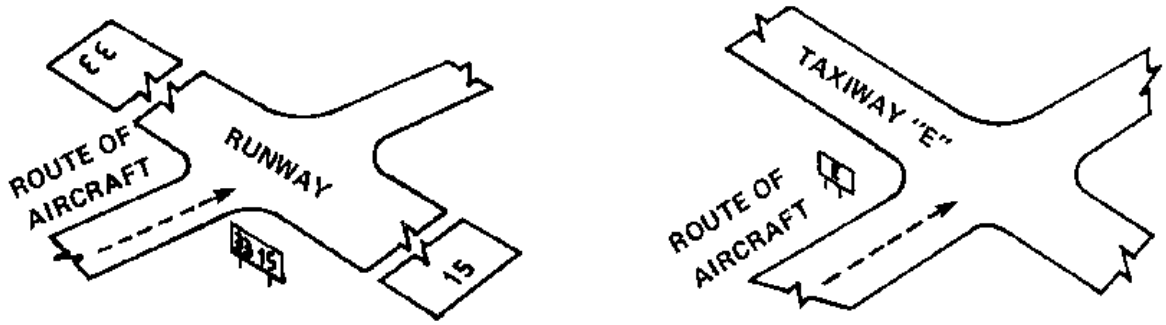

C. TYPICAL RUNWAY INTERSECTION SIGN

D. TYPICAL TAXIWAY INTERSECTION SIGN

Figure 4. Typical locations for destination and intersection signs

TABLE 1. SCHEDULE OF LIGHTING EQUIPMENT FOR TAXIWAY GUIDANCE SIGNS

Purpose Type of Fixture	Lamp Rating and Type	Isolation Transformer	
		Rating	FAA Type AC150/5345-47
Mandatory signs, white legends on red background.[1/]			
FAA AC 150/ 5345-44, type L-858R, Size 2, 3, or 5, Style 2 or 3, Class 1 or 2, Legends as specified	Watts, type and number as determined by manufacturer.	6.6/6.6A. Watts and number as determined by manufacturer.	Type as required by the watts.
Informational signs. Direction, destination and boundary. Black legends on yellow background.[1/]			
FAA AC 150/ 5345-44, type L-858Y, Size 2, 3, or 5, Style 2 or 3, Class 1 or 2, Legends as specified	Watts, type and number as determined by manufacturer.	6.6/6.6A. Watts and number as determined by manufacturer.	Type as required by the watts.
Location signs, yellow legends on black background.			
FAA AC 150/ 5345-44, type L-858L, Size 2, 3, or 5, Style 2 or 3, Class 1 or 2, Legends as specified	Watts, type and number as determined by manufacturer.	6.6/6.6A. Watts and number as determined by manufacturer.	Type as required by the watts.

[1/] The number of signs varies with the airfield installation.

SIGNS: MANDATORY
FAA AC 150/5345-44
TYPE L-858R, SIZE 2,
3, OR 5, STYLE 2 OR
3, CLASS 1 OR 2,
LEGENDS AS REQUIRED.

LAMPS: RATING AND
TYPE AS DETERMINED
BY MANUFACTURER.

ISOLATION TRANSFORMERS:
6.6/6.6A, WATTS AND
NUMBER AS DETERMINED
BY MANUFACTURER.

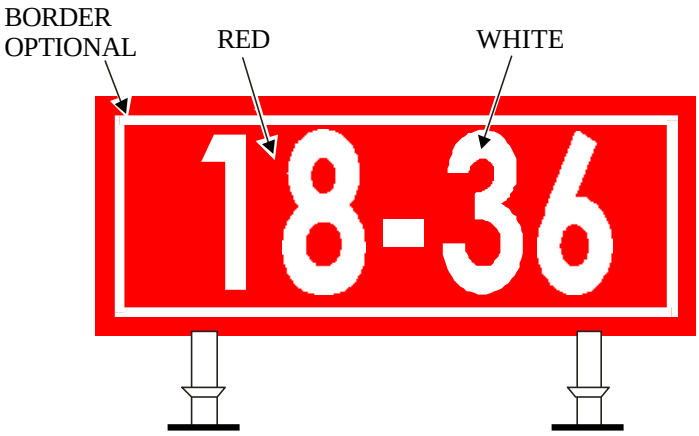

MANDATORY SIGN (RED)

SIGNS: INFORMATIONAL,
FAA AC 150/5345-44,
TYPE L-858Y, SIZE 2,
3, OR 5, STYLE 2 OR
3, CLASS 1 OR 2,
LEGENDS AS REQUIRED.

LAMPS: RATING AND
TYPE AS DETERMINED
BY MANUFACTURER.

ISOLATION TRANSFORMERS:
6.6/6.6A, WATTS AND
NUMBER AS DETERMINED
BY MANUFACTURER.

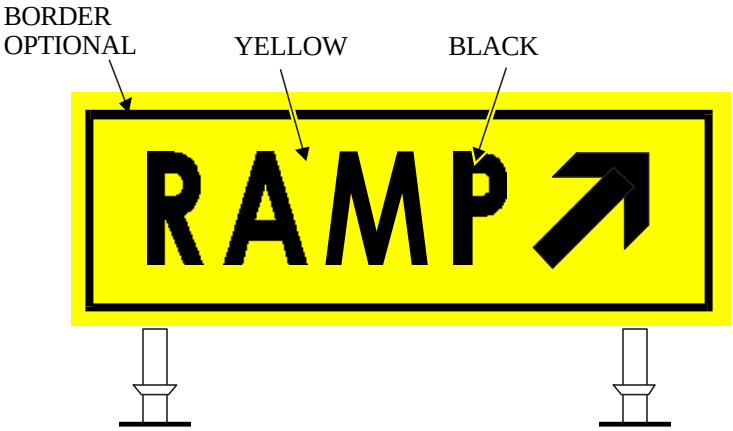

INFORMATIONAL (DESTINATION) SIGN (YELLOW)

Figure 5. Typical taxiway guidance signs

TECHNICAL MANUAL

SPECIAL TAXIWAY SIGNS (TACAN, BILLBOARD)

SHOREBASED AIRFIELDS

Reference Material

Introduction 002 00
Taxiway Markings 005 01
Taxiway Edge Lights 005 02
Taxiway Centerline Markings 005 03
Taxiway Guidance Signs 005 04
Holding Position Signs and Lights for Intersections with Runways 005 06
Colors FED-STD-595
Apron and Parking Area Lighting 006 02
Electrical Power and Control for Visual Aids 009 00
Isolation and Distribution Transformers 009 03
Aeronautical Ground Light and Surface Marking Colors ..... ICAO, Annex 14, Vol. 1, App. 1
Specification for Taxiway and Runway Signs ..... FAA AC 150/5345-44
Isolation Transformers for Airport Lighting ..... FAA AC 150/5345-47

Alphabetical Index

Subject **Page No.**

Alignment 4
Billboard Signs 2
Controls 4
Description 2
Equipment 4
Existing Installations 2
Fixtures. 4
General Information. 2
Installation Requirements 2
Installations 2
Intensity Control 4
Justification Requirements. 2
Locations. 4
Methods Of Installation. 2
Photometric Requirements. 4
Power. 4
Power And Controls 4
Purpose. 2
Related Facilities 2
Schedule Of Lighting Equipment For Taxiway Guidance Signs 6
TACAN Checkpoint Signs. 2

Record of Applicable Technical Directives

None

1. GENERAL INFORMATION.

2. PURPOSE.

This Work Package (WP) contains the requirements for the special taxiway signs. These signs provide pilots with information for checking operation of the aircraft navigational equipment and for following the desired route for taxiing through complicated areas and intersections rapidly and safely. The special taxiway signs are types of informational taxiway guidance signs installed for a specific purpose and supplement the information and guidance provided by the taxiway edge lights (WP005 02), centerline lights (WP005 03), and guidance signs (WP005 04). This information shall be provided for operations both day and night in all visibility conditions. These requirements are to be used for designing new taxiway guidance sign installations. Existing installations may be used and maintained until upgrading or replacement is required.

3. JUSTIFICATION REQUIREMENTS.

The use of special taxiway signs is not a mandatory requirement but should be installed where additional information or guidance is needed. The check point signs are installed where the navigational aid checkpoint is established (WP005 01). The large billboard signs are used only where more information is needed than that provided by lights and taxiway guidance signs. These signs are connected into the taxiway lighting circuits. Any variations from the requirements of this WP shall be approved in accordance with the procedures of WP002 00.

4. RELATED FACILITIES.

Special taxiway signs are associated with:

a. Taxiway markings (WP005 01),

b. Taxiway edge lights (WP005 02),

c. Taxiway centerline lights (WP005 03),

d. Holding Position Signs and Lights for Intersections with Runways (WP005 06),

e. Apron and Parking Area Lighting (WP006 02).

5. DESCRIPTION.

6. TACAN CHECKPOINT SIGNS.

The TACAN checkpoint signs shall provide information for the pilot when verifying the operation of the navigational aid in the aircraft before takeoff. For location of the TACAN checkpoint, refer to WP005 01. The sign shall include the type of navigational aid, identification code, radio channel, magnetic bearing, and the distance in nautical miles to the transmitting antenna from the checkpoint marking (figure 1). The character height shall be not less than 7 inches or more than 8 inches high and the stroke width not less than one inch. The sign should have black characters on a yellow background and shall be similar in shape and color when lighted at night and unlighted in daytime. Other contrasting colors are permitted. The signs may be internally or externally illuminated with uniform brightness. The height of the sign shall be not more than 32 inches and the length not more than 72 inches, however, the elevation of the top shall not exceed 40 inches above the taxiway edge elevation and shall be less if less than 50 feet from the taxiway edge.

7. BILLBOARD SIGNS.

Complicated intersections of taxiways, with runways, other taxiways, runway thresholds with special warm-up areas, and complex taxiway intersections are the areas most frequently requiring billboard signs and are used when existing taxiway lights and guidance signs are not considered adequate. The billboard signs shall show the area pictorially. The information presented by these signs shall be designed for the individual needs of each site. The taxiing routes are usually shown as black on a white background. Billboard signs shall be lighted, usually externally illuminated. The height of these signs is between 48 and 54 inches. These signs shall withstand winds of 75 miles per hour or greater from any direction.

8. INSTALLATIONS.

9. INSTALLATION REQUIREMENTS.

Installation details for the TACAN checkpoint signs and special taxiway signs are given below.

10. METHODS OF INSTALLATION.

The special taxiway signs shall be of lightweight construction and shall be mounted on frangible couplings. The signs shall be placed on concrete foundations which are not noticeably affected by frost heaves or changes in soil conditions. A marker light base for containing the isolation transformer or power adapter may be installed. For airfields in areas with frequent occurrences of snow accumulations of more than six inches, it may be desirable to obtain approval by Naval Air Systems Command to raise the height of the special taxiway signs. The additional height should be kept to the minimum acceptable to reduce the

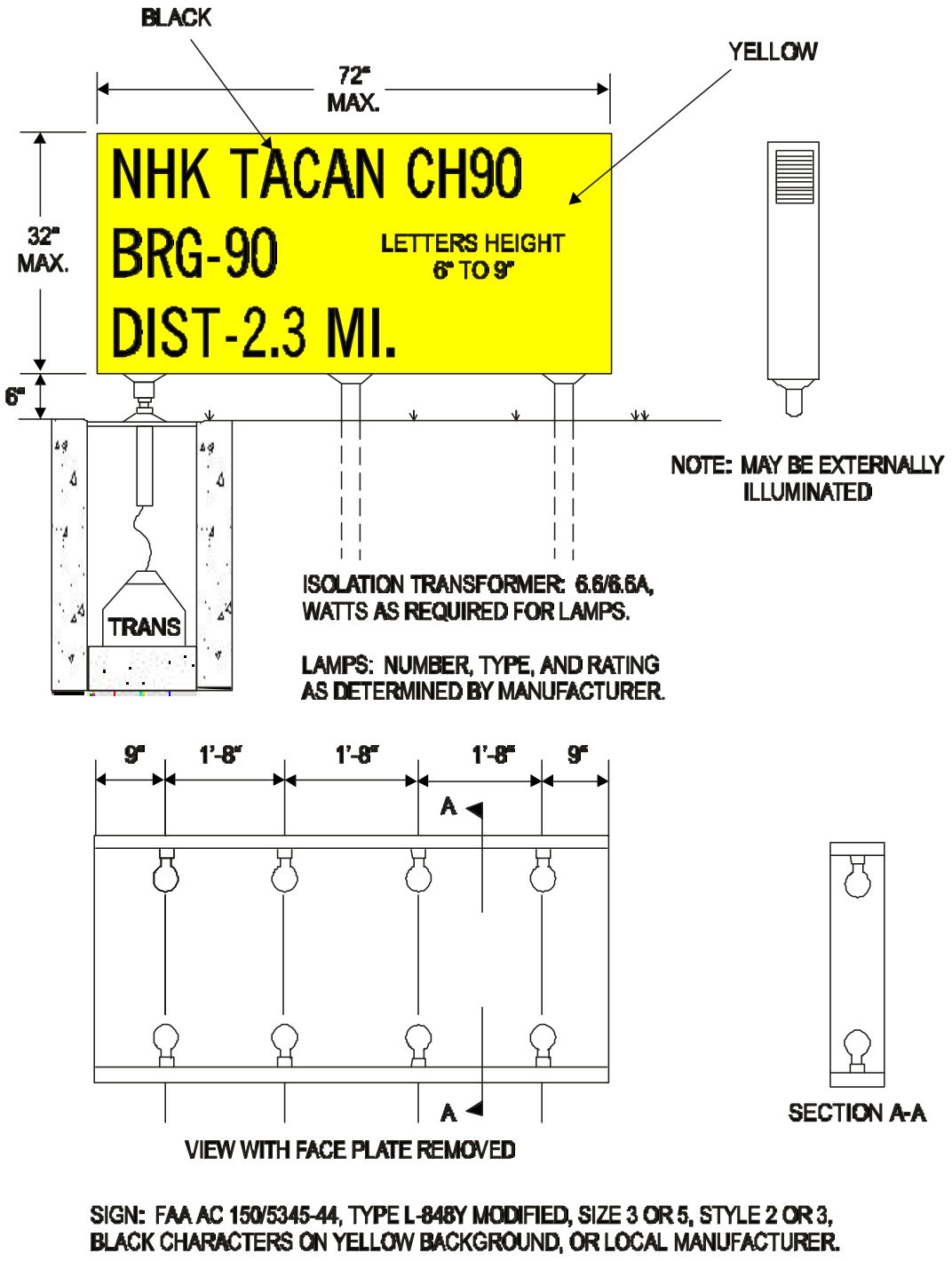

Figure 1. An example of a TACAN checkpoint sign

aircraft strike hazard and limit increased wind loading and blast forces. As the overall height is increased, the signs must be located further from the taxiway edges (see LOCATIONS of this WP). Raising the signs will require longer mounting nipples and may require longer cables to the terminal strips or connectors of the signs. Before procurement or arranging for installation, check with the manufacturer for adequate strength of the fixtures and any special mounting requirements.

11. LOCATIONS.

The location and alignment of the TACAN checkpoint sign shall be as shown in figure 2. The checkpoint signs shall be not less than 25 feet from the taxiway edge. The sign shall be not less than 200 feet from the runway edge and not closer to the runway edge than the holding position marking. The sign is usually located on the same side of the taxiway as the turn onto the runway. The sign shall be on a line from the center of the checkpoint marking at 45 degrees from the taxiway centerline or 45 degrees to the taxiway edge if the centerline is indefinite or not a straight line. The horizontal axis of the sign shall be aligned perpendicular to the line between the checkpoint marking and the sign. The elevation of the top of the sign above the taxiway edge shall be not more than 24 inches if less than 35 feet from the taxiway, or 30 inches if less than 50 feet from the taxiway, or more than 48 inches if 50 feet or more from the taxiway. The billboard sign shall be located at the entrance of the area it marks with the edge of the sign not less than 75 feet from the taxiway edge and not less than 200 feet from the runway edge or extended runway edge. The sign may be located on the more convenient side of the taxiway. The horizontal axis of the sign shall be aligned for clear viewing by the pilot from the taxiway centerline at the entrance to the area and present a clear correlation of the pictorial routes with the existing installations. The elevation of the top of the billboard shall not exceed 48 inches above the elevation of the taxiway edge.

12. EQUIPMENT.

13. FIXTURES.

Special taxiway signs shall be lightweight and mounted on frangible couplings. These signs shall be illuminated for use at night but the information shall appear similar in shape and color during daytime operations. The TACAN checkpoint signs may be either internally or externally illuminated but the billboard signs are usually externally illuminated. The signs may be custom made locally or be modified FAA type taxiway and runway signs. The equipment for these signs shall be as listed in table 1. An example of a TACAN checkpoint sign is shown in figure 1.

14. PHOTOMETRIC REQUIREMENTS.

The special taxiway signs, when not lighted, shall be yellow characters on a black background for TACAN checkpoint signs and black routes on a white background for billboard signs. These colors shall be in accordance with FED-STD-595 as follows:

a. Yellow, color chip No. 23538,

b. White, color chip No. 27875,

c. Black, color chip No. 27038.

The light from the lighted TACAN checkpoint signs at night shall be aviation yellow on a black background in accordance with ICAO, Annex 14, Vol. 1, App. 1. The characters or surface of the signs with the sections for each color shall be uniformly illuminated. These signs, day or night in 3000-foot meteorological visibility, shall be discernible at distances not less than 800 feet and shall be clearly legible at not less than 500 feet.

15. POWER AND CONTROLS.

16. POWER.

The electrical power for the special taxiway signs shall be provided by the 6.6-ampere series circuits (WP009 00) for the associated taxiway edge or centerline lights. The lamps of the signs shall be connected to the primary series circuit by the required number and rating of series-series isolation transformers (WP009 03). If required by the manufacturer, a power adapter shall be provided. Emergency power shall be the same as that required for the associated taxiway edge or centerline lights.

17. CONTROLS.

The special taxiway signs shall be controlled by the controls for the associated taxiway edge or centerline lights. Intensity control is not desirable, but if provided for the taxiway lights, the illumination of the sign at the lowest intensity setting shall be not less than 50 percent of the illumination at rated current.

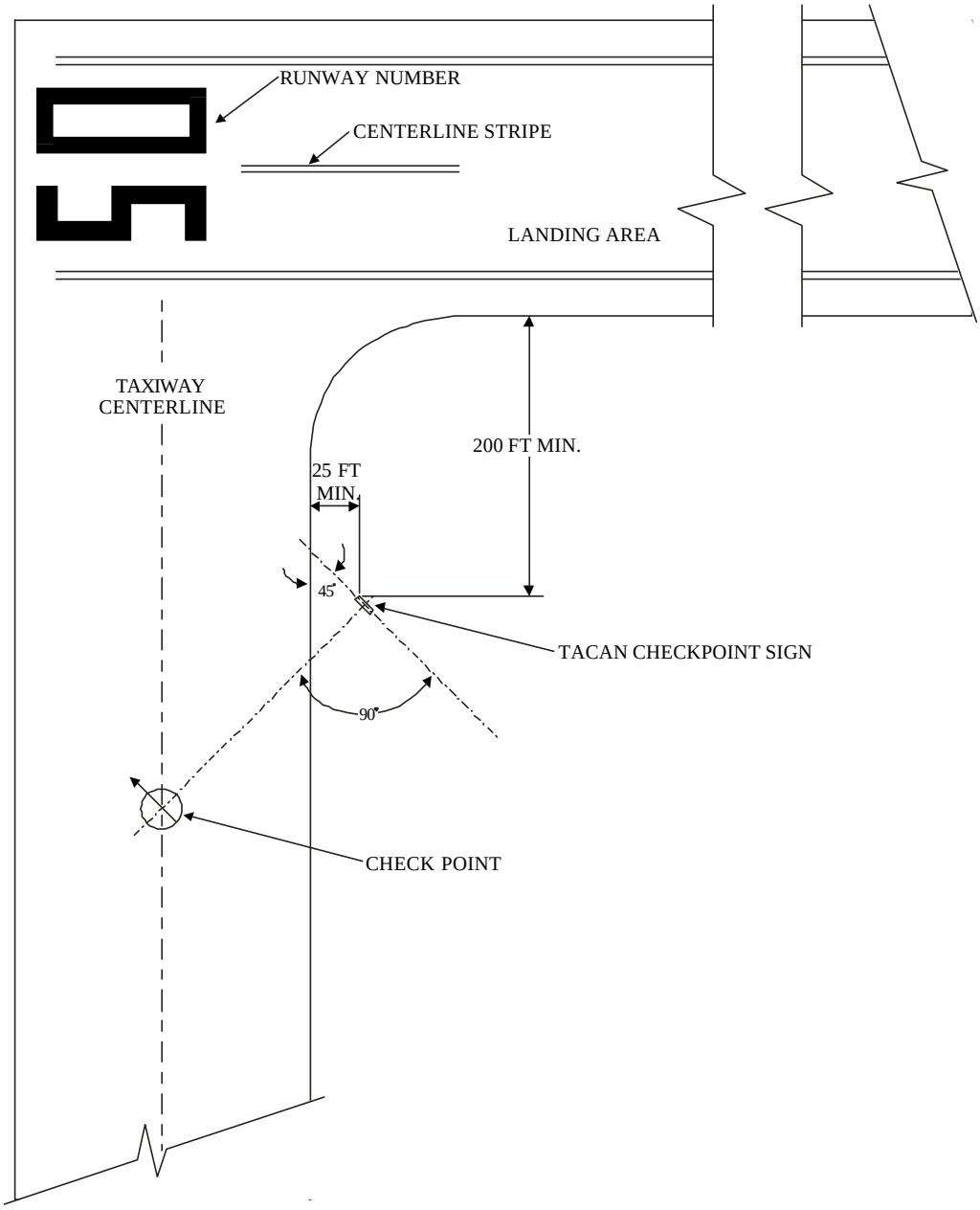

Figure 2. Typical location of a TACAN checkpoint sign

TABLE 1. SCHEDULE OF LIGHTING EQUIPMENT FOR TAXIWAY GUIDANCE SIGNS

Purpose Type of Fixture	Lamp Rating and Type	Isolation Transformer	
		Rating	FAA Type AC150/5345-47
TACAN checkpoint signs, each individual.			
Modified FAA AC 150/ 5345-44, type L-858Y, Size 3 or 5, Style 2 or 3, black characters on yellow background.	As determined by manufacturer.	6.6/6.6A, watts as determined by manufacturer.	As required.
or			
Local manufacture.	(8) 50W 120V general purpose type.	6.6/6.6A, 200W	L-830-6
Billboard signs, each individual.			
Modified FAA AC 150/ 5345-44, type L-858, Size 4, Style 2 or 3, externally lighted, black on white background.	As determined by manufacturer.	6.6/6.6A, watts as determined by manufacturer.	As required.
or			
Local manufacture.	As required.	6.6/6.6A, watts as required for the lamps.	As required.

TECHNICAL MANUAL

HOLDING POSITION SIGNS AND LIGHTS FOR INTERSECTIONS WITH RUNWAYS

SHOREBASED AIRFIELDS

Reference Material

Introduction 002 00
~~Definitive Designs for Naval Shore Facilities ..... NAVFAC P-272~~
Taxiway Markings 005 01
Taxiway Edge Lights 005 02
Taxiway Centerline Markings 005 03
Taxiway Guidance Signs 005 04
Colors FED-STD-595
Electrical Power and Control for Visual Aids 009 00
Isolation and Distribution Transformers 009 03
Design Drawings for Visual Air Navigation Facilities ..... UFC 3-535-02
~~Airfield Lighting ..... MIL-HDBK-1023/1~~
Aeronautical Ground Light and Surface Marking Colors ..... ICAO, Annex 14, Vol. 1, App. 1
Marking of Paved Areas on Airports ..... FAA AC 150/5340-1
Specification for Taxiway and Runway Signs ..... FAA AC 150/5345-44
Specification for Runway and Taxiway Light Fixtures ..... FAA AC 150/5345-46
Isolation Transformers for Airport Lighting ..... FAA AC 150/5345-47
Standards for Specifying Construction Airports ..... FAA AC 150/5370-10

Alphabetical Index

Subject **Page No.**

Alignment 5
Clearance Lights 2
Controls 10
Description 2
Equipment 9
Existing Installations 2
Fixtures. 9
General Information. 2
Holding Position Edge Lights. 5
Holding Position Lights 2
Holding Position Signs. 2
Installation Requirements 5
Installations 5
Intensity Control 10
Intensity Requirements for Holding Position Lights 10
Justification Requirements. 2
Locations. 5
Mandatory Signs 2
Methods Of Installation. 5
Photometric Requirements. 9
Power. 10

Power And Controls.....10
Purpose. 2
Related Facilities.....2
Schedule Of Equipment For Holding Position Signs And Lights.....8
Wig-Wag Lights.....5

Record of Applicable Technical Directives

None

1. GENERAL INFORMATION.

2. PURPOSE.

This Work Package (WP) contains the requirements for the holding position signs and lights located at intersections of taxiways with runways. The signs and lights supplement the holding position markings on the taxiway to indicate to the pilot the nearest position to the runway that he shall proceed without clearance for takeoff or crossing the runway. This information shall be provided for operations both day and night in all visibility conditions. These requirements are to be used for designing new holding position signs and light installations. Existing installations of signs and lights may be used and maintained until upgrading or replacement is required.

3. JUSTIFICATION REQUIREMENTS.

Holding position signs shall be installed at all taxiway intersections with runways for airfields with Instrument Flight Rules (IFR) operation (WP002 00). Airfields authorized for Visual Flight Rules (VFR) operations only may not require these signs; however, if there is a need that justifies installing them, the signs shall be installed at all taxiway intersections with runways. Holding position lights are installed only if taxiway centerline lights are installed at the particular intersection or if experience has shown the need for better identification of the holding position than that provided by the holding position markings and signs. Any variations from the requirements of this WP shall be approved in accordance with the procedures of WP002 00.

4. RELATED FACILITIES.

Holding position signs and lights are associated with the following:

a. Taxiway markings (WP005 01),

b. Taxiway edge lights (WP005 02),

c. Taxiway centerline lights (WP005 03),

d. Taxiway guidance signs (WP005 04).

5. DESCRIPTION.

6. HOLDING POSITION SIGNS.

The holding position signs are one type of mandatory guidance signs. The holding position signs shall be located at each holding position marking (WP005 01) and shall have the runway number in white numerals on a red background (figure 1). Holding positions at the standard location and at the instrument clearance positions require markings and may require signs. For intersections at the runway threshold, the number for that end of the runway is used. For intersections other than at a threshold, the sign shall show the runway numbers at both ends such as “33-15.” Threshold 33 is on the left and threshold 15 is on the right. The letters L, C, and R are included on the signs where used in the runway identification. Typical numerals and letters are shown in figure 2. The height of the letters shall be not less than 15 inches and the height of the sign not less than 24 inches. The signs shall be internally lighted for night operations and the color and shape of the information shall appear to be similar when observed unlighted during the day. The signs may be single-faced or double-faced, but only one face is the holding position marker.

7. HOLDING POSITION LIGHTS.

Holding position or clearance lights are a group of three semiflush lights centered about the taxiway centerline at the holding position marking. Five lights may be used in very wide taxiway areas. If taxiway centerline lights are installed in the area of the holding position, holding position lights shall be installed. The holding position lights shall be the same type as the centerline lights except with yellow filters. For some intersections without centerline lights, the need may justify installing holding position lights. The three lights shall have beams of yellow light directed toward the approach to the holding position. The lights shall be unidirectional except the center light may be bidirectional with green

beam towards the runway if this light is part of the centerline lights.

HOLDING POSITIONS SIGNS:
FAA AC 150/5345-44, TYPE
L-858R, SIZE 2, 3, OR 5,
CLASS 1 OR 2,
LEGENDS AS REQUIRED.

LAMPS: RATING AND
TYPE AS DETERMINED
BY MANUFACTURER.

ISOLATION TRANSFORMERS:
6.6/6.6A, WATTS AND
NUMBER AS DETERMINED
BY MANUFACTURER

A. HOLDING POSITION SIGN AT RUNWAY THRESHOLD.

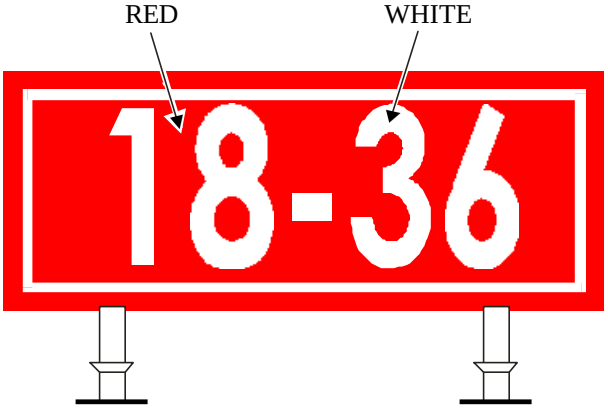

B. HOLDING POSITION SIGN AT OTHER THAN RUNWAY THRESHOLD.

Figure 1. Examples of holding position markers (signs)

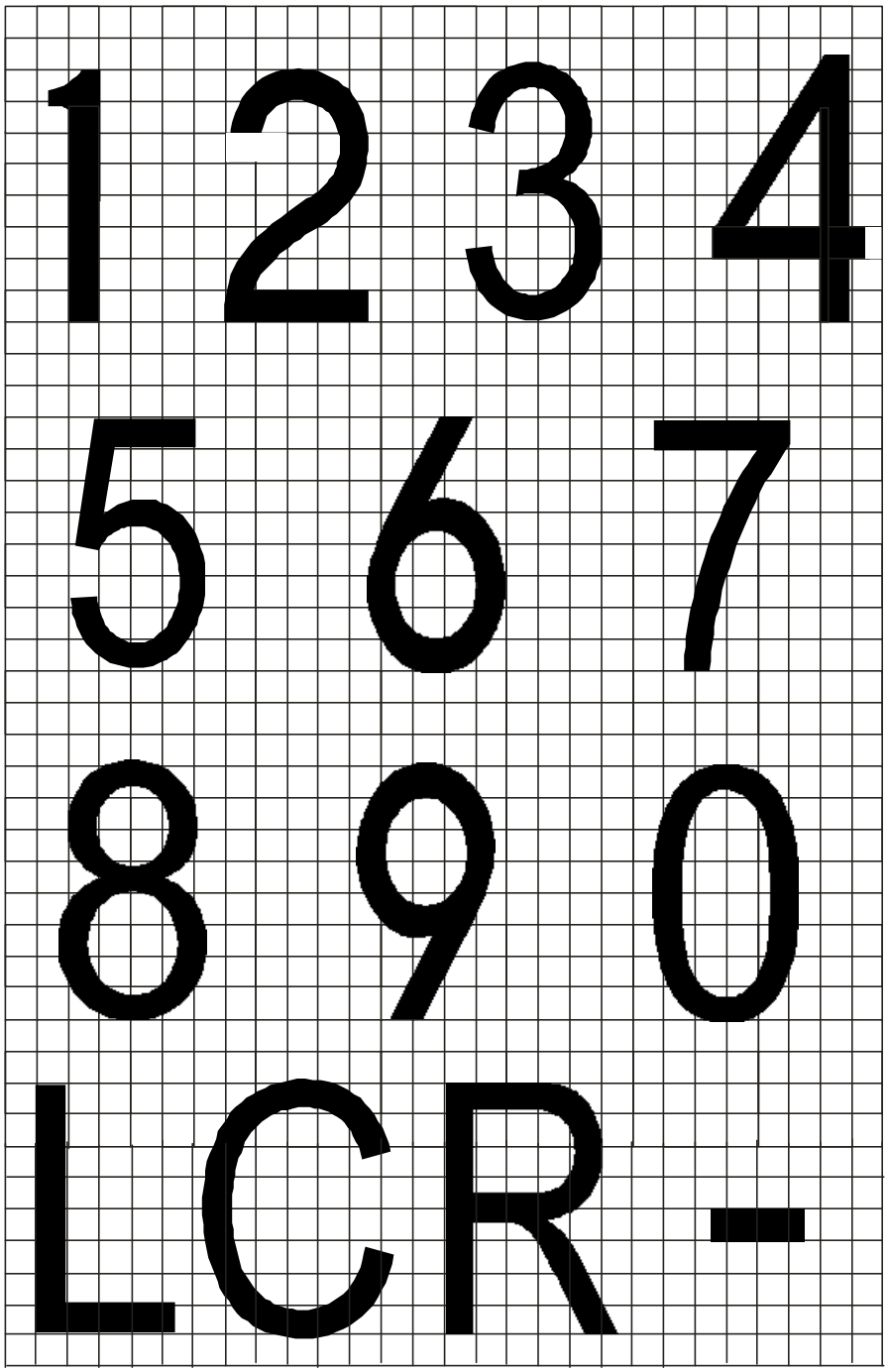

COLORS: WHITE NUMERALS AND LETTERS ON A RED BACKGROUND

Figure 2. Typical numerals and letters for holding position signs

8. HOLDING POSITION EDGE LIGHTS.

For holding positions where holding markings, signs, and clearance lights have not been fully effective, holding position edge lights (wig-wag lights) should be installed to emphasize the need for caution and use of safety procedures. Each holding position edge light installation shall consist of a fixture on each side of the taxiway at the holding position line.

9. INSTALLATIONS.

10. INSTALLATION REQUIREMENTS.

For installation details for the holding position signs and lights, refer to ~~MIL-HDBK-1023/1 and NAVFAC P-272~~ **UFC 3-535-02** and for holding position marking refer to FAA AC 150/5340-1 and AC 150/5370-10. General design and installation requirements for the holding position signs and lights are given below.

11. METHODS OF INSTALLATION.

The holding position signs shall be of lightweight construction and shall be mounted on frangible couplings. The signs shall be placed on a concrete slab or pier which are not noticeably affected by frost heaves or changes in soil conditions. A marker light base for containing the isolation transformer or power adapter may be installed. The holding position light fixtures shall be installed in the pavement either base-mounted or direct-mounted in drilled holes. If the lights are base-mounted in drilled holes. If the lights are base-mounted an individual isolation transformer for each light shall be placed in the base. If the lights are direct-mounted, a 200-watt isolation transformer located at the taxiway edge shall supply the three lights and each light shall have a shorting device to short across failed lamps. The holding position edge (wig-wag) light fixtures shall be installed on light bases or on conduits in concrete foundations using frangible couplings. The isolation transformer or power supply unit may be located in the same light base or in a separate handhole or light base. For airfields in areas with frequent occurrences of snow accumulations of more than six inches, it may be desirable to obtain approval by Naval Air Systems Command to raise the height of the wig-wag lights. The additional height should be kept to the minimum acceptable to reduce the hazard of aircraft strikes and limit the increased wind loading and blast forces. As the overall height is increased, the signs and wig-wag lights must be located further from the taxiway edge (see LOCATIONS of this WP). Raising the signs and lights will require longer mounting nipples and may require longer cables to the connectors or terminal strips of the signs and lights. Before procurement or arranging for installation, check with the manufacturer for adequate requirements.

12. LOCATIONS.

The location of the holding position signs shall be in line with the holding position markings (figure 3). A single sign, preferably on the left-hand side of the approach to the intersection, or a sign on each side of the holding position if the length of the holding position marking is 150 feet or more, shall be installed. The edge of these signs shall be not less than 25 feet from the taxiway edge, and if the elevation of the top of the sign is more than 24 inches above the elevation of the edge of the taxiway, the edge of the sign shall be not less than 35 feet from the taxiway edge. The signs shall be vertical and shall be aligned horizontally with the face of the sign at right angles ±5 degrees to the centerline of the taxiway. The holding position lights shall be located not more than 3 feet from the edge of the first line of the holding position marking on the approach side to the holding position. The center light shall be located on or not more than 12 inches from the centerline or axis of the taxiway to avoid painting over the lights when repainting the markings. The other two lights, four lights if greater length is needed, shall be on 5 feet ±2 inches on centers from the center light. Usually the line of lights is perpendicular to the taxiway centerline, but if the holding position markings are parallel to the runway centerline, the line of lights shall be parallel to the runway centerline. The individual lights may be not more than 2 inches from the line of lights. The axes of the beams for these lights shall be parallel ±2 degrees to the axis of the taxiway. The holding position edge light fixtures shall be located in line with the holding position and the holding position markers on each side. The fixture shall be placed as closely as possible to the taxiway edge as permitted by height clearance but not less than 35 feet from the taxiway edge and not less than 3 feet from the outside edge of the holding position markers. The height of the fixture shall be not more than 30 inches above the adjacent taxiway edge except for airfields in areas of deep snow accumulations with approval by the Naval Air Systems Command for elevating the fixtures. The fixture shall be aimed horizontally with the center of the beams to intercept the taxiway centerline 100 feet before the holding position. Vertically, the center of the beams should be aimed at 10 degrees above horizontal.

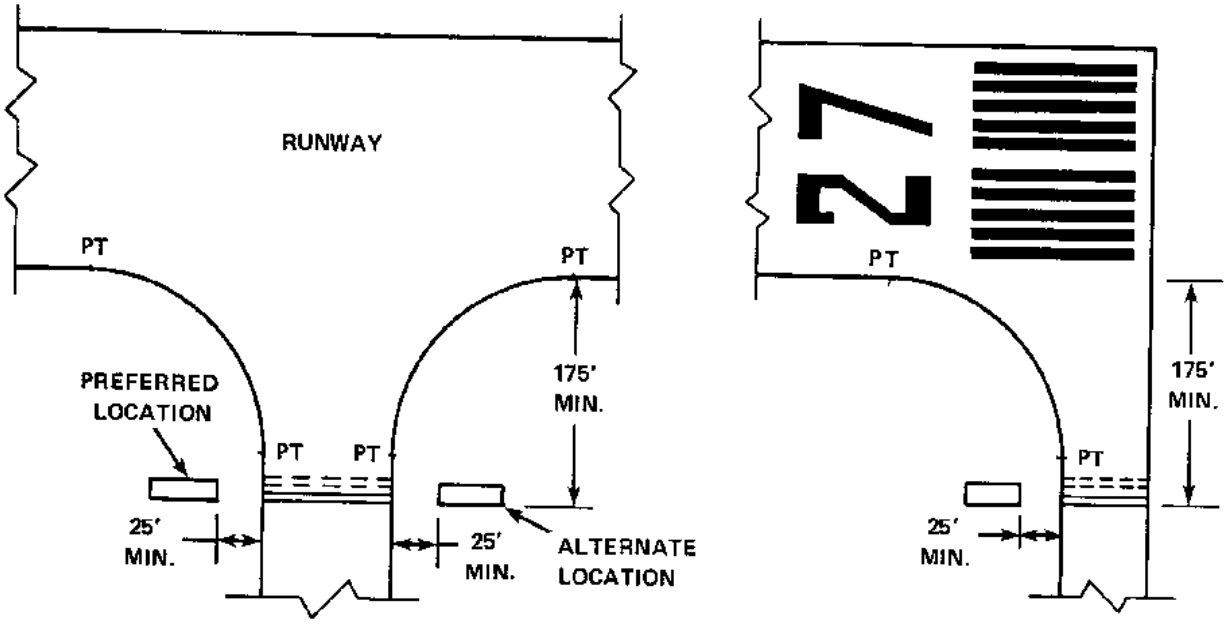

A. LOCATIONS FOR HOLDING POSITION SIGNS

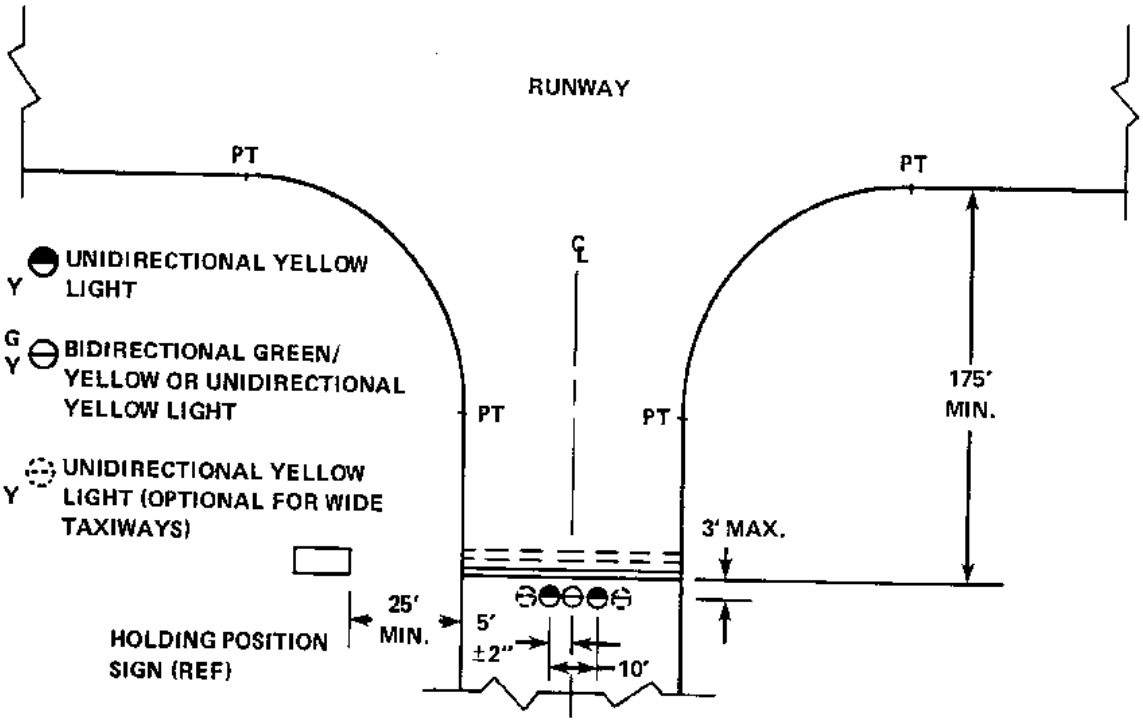

B. LOCATION FOR HOLDING POSITION LIGHTS

Figure 3. Typical locations for holding position signs and lights

LIGHT: SEMIFLUSH, BIDIRECTIONAL OR UNIDIRECTIONAL, FAA AC 150/5345-46 TYPE L-852A, B, C, OR D, AS DETERMINED FOR NARROW-BEAM, WIDE-BEAM, OR CATEGORY III.

LAMP: 6.6A, WATTS AND TYPE AS DETERMINED BY THE MANUFACTURER.

FILTERS: AVIATION YELLOW OR YELLOW/ GREEN, TYPE AS DETERMINED BY MANUFACTURER.

ISOLATION TRANSFORMER: 6.6/6.6A, FAA AC 150/5345-47, WATTS AS DETERMINED BY THE MANUFACTURER. TYPE AS REQUIRED FOR THE WATTS.

COLOR OF EMITTED LIGHT IS AVIATION YELLOW OR GREEN.

UNIDIRECTIONAL LIGHTS ARE PROVIDED BY BLANKING OUT ONE BEAM.

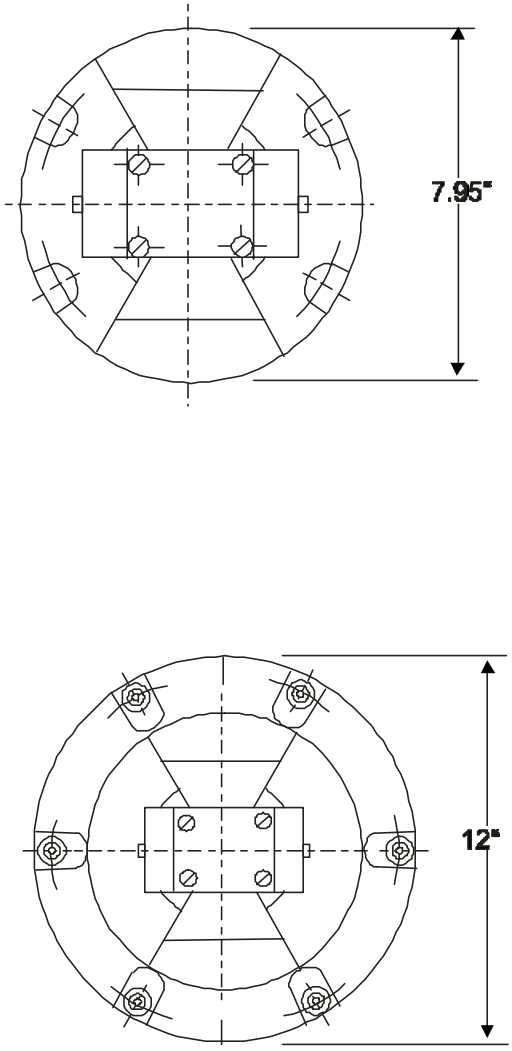

Figure 4. Typical holding position light fixtures

TABLE 1. SCHEDULE OF EQUIPMENT FOR HOLDING POSITION SIGNS AND LIGHTS

Purpose Type of Fixture	Lamp Rating and Type	Isolation Transformer Rating	Isolation Transformer FAA Type AC150/5345-47
Holding position signs, 1 or 2 per holding position.			
Sign: FAA AC 150/ 5345-44, Type L-858R, Size 2, 3 or 5, Style 2 or 3, Legends as specified.	Watts, type, and number as determined by manufacturer.	6.6/6.6A, watts and number as determined by manufacturer.	Type as required by the watts.
Holding position lights, semiflush, unidirectional, yellow, or bidirectional yellow/greed, 3 or 5 per holding position.			
For straight sections of regular taxiways.			
Lights: FAA AC 150/ 5345-46, Type L-852A, Mode 1, 45W 6.6A	45W 6.6A, type as determined by manufacturer.	30/45W 6.6/6.6A	L-830-1
For curved sections of regular taxiways.			
Lights: FAA AC 150/ 5345-46, Type L-852B, Mode 1, 65W 6.6A	65W 6.6A, type as determined by manufacturer.	100W, 6.6/6.6A	L-830-4
For straight sections of Category III taxiways.			
FAA AC 150/ 5345-46, Type L-852C, Mode 1	6.6A, watts and type as determined by manufacturer.	6.6/6.6A, watts as determined by manufacturer.	
For curved sections of Category III taxiways.			
FAA AC 150/ 5345-46, Type L-852D, Mode 1, 6.6A	6.6A, watts and type as determined by manufacturer.	6.6/6.6A, watts as determined by manufacturer.	
Holding position edge lights, elevated, unidirectional, yellow, 2 per holding position.			
FAA AC 150/ 5345-46, Type L-840, Mode 1	6.6A, watts and type as determined by manufacturer.	6.6/6.6A, watts as determined by manufacturer.	

LIGHT: ELEVATED, UNI-DIRECTIONAL
FAA AC 150/5345-46 TYPE L-804
YELLOW, FLASHING

LAMP: TWO 6.6A, WATTS AND
TYPE AS REQUIRED BY
MANUFACTURER.

FILTER: AVIATION YELLOW,
8" DIAMETER, TYPE AS REQUIRED
BY MANUFACTURER.

ISOLATION TRANSFORMER: 6.6/6.6A,
WATTS AS REQUIRED BY MANUFACTURER,
FAA AC 150/5345-47
OR
SPECIAL POWER SUPPLY.

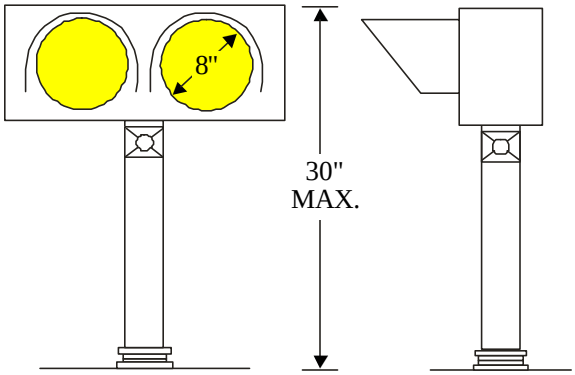

TYPICAL FIXTURE

Figure 5. Typical holding position edge light, type FAA L-804

13. EQUIPMENT.

14. FIXTURES.

Holding position signs shall be lightweight and mounted on frangible couplings. The faces of the signs may be vertical or curved. The signs may be in sections with a character on each section or formed as message units. If the runway is used for nighttime operations, the signs shall be internally illuminated. The message shall appear similar in shape and color for daytime operations. The illumination may be furnished by a lamp in each section or other lighting arrangement that provides clearly lighted characters. The holding position lights shall be semiflush, unidirectional, yellow lights, except the center light shall be a bidirectional yellow/green light if it is part of a taxiway centerline section. The equipment for these signs and lights shall be as listed in table 1. Typical examples of the signs are shown in figure 1. Typical examples of semiflush light fixtures are shown in figure 4. The holding position edge (wig-wag) light fixtures shall consist of two lights mounted side by side in the same housing. The two lights shall have a source or cover size of at least eight inches in diameter with arrangements to shield the lights from view from the back, top, or sides. The emitted light shall be yellow and alternately flashed 50 to 60 times per minute. The illuminated period of each flash shall be not less than one-half or more than two-thirds of the total cycle. Typical example of the holding position edge light fixtures are shown in figure 5.

15. PHOTOMETRIC REQUIREMENTS.

The holding position signs, when not lighted, shall be white legends on a red background. These colors shall be in accordance with FED-STD-595 as follows:

a. Red, color chip No. 21105,

b. White, color chip No. 27875.

The emitted light from the signs shall be aviation white on aviation red, from the clearance lights shall be aviation yellow or aviation green, and from the wig-wag lights shall be aviation yellow in accordance with ICAO, Annex 14, Vol. 1, App. 1. The surface of the signs shall be uniformly illuminated. These signs, day or night, in 3000-foot meteorological visibility, shall be discernible at not less than 800 feet distance and shall be clearly legible at not less than 500 feet. The intensity control of the holding position lights shall be the same as provided for the associated taxiway edge light or centerline light circuit. For the holding position edge lights, the lowest intensity setting shall no be less than 30 percent of the rated effective intensity. The intensity and beamspread of each beam for these lights at rated current shall be as required in table 2.

16. POWER AND CONTROLS.

17. POWER.

The electrical power for the holding position signs and lights shall be provided by the 6.6-ampere series circuits (WP009 00) for the associated taxiway edge or centerline lights. The lamps of the signs and lights shall be connected to the primary series circuit by the required number and rating of series-series isolation transformers (WP009 03). If required by the manufacturer, a power adapter for the signs and holding position edge lights shall be provided. The holding position lights may be connected to the associated taxiway light circuit by individual isolation transformers or by a single transformer energizing the three lights. Emergency power shall be the same as that required for the associated taxiway edge or centerline lights.

TABLE 2. INTENSITY REQUIREMENTS FOR HOLDING POSITION LIGHTS

Type of Light	Minimum Average Intensity of Main Beam, Yellow (candelas)	Minimum Beamspread Coverage (degrees)			
		Main Beam		At 10 Percent of Rated Intensity	
		Horizontal	Vertical	Horizontal	Vertical
L-852A	20	±10	1 to 4	±16	0.5 to 10
L-852B	20	±30	1 to 4	±30	0.5 to 10
L-852C	200	±3.5	1 to 8	±4.5	0 to 13
L-852D	100	±30	1 to 10	±30	0 to 15
L-804	600	±8	±8	-	-

18. CONTROLS.

The holding position signs and lights shall be controlled by the controls for the associated taxiway edge or centerline lights. During daylight in Visual Flight Rules (VFR) conditions, the holding position signs and lights may be unlighted, but for operations in Instrument Flight Rules (IFR) conditions (WP002 00), the signs and lights shall be lighted. Intensity control is not required, but if provided for the taxiway lights, the illumination of the sign at the lowest intensity setting shall be not less than 50 percent of the illumination at rated current. The holding position lights may have the same intensity control as the associated taxiway lights. For the holding position edge (wig-wag) lights, the intensity may be controlled by the intensity of the taxiway lights or by a photoelectric switch, but the lowest intensity shall not be less than 30 percent of rated intensity.

TECHNICAL MANUAL

TAXIWAY LIGHTS FOR RUNWAYS USED AS TAXIWAYS

SHOREBASED AIRFIELDS

Reference Material

Introduction 002 00
~~Definitive Designs for Naval Shore Facilities ..... NAVFAC P-272~~
High-Intensity Runway Edge Lights (HIRL) 004 05
Taxiway Markings 005 01
Taxiway Edge Lights 005 02
Taxiway Guidance Signs 005 04
Electrical Power and Control for Visual Aids 009 00
Auxiliary Power and Power Transfer Equipment 009 01
Constant-Current Regulators 009 02
Isolation and Distribution Transformers 009 03
Airfield Lighting Control Panels 009 05
Special Remote Control Equipment 009 06
Design Drawings for Visual Air Navigation Facilities ..... UFC 3-535-02
~~Airfield Lighting ..... MIL-HDBK-1023/1~~
Aeronautical Ground Light and Surface Marking Colors ..... ICAO, Annex 14, Vol. 1, App. 1
Lights, Airport, Semiflush, General Specifications MIL-L-26202
Specification for Runway and Taxiway Light Fixtures ..... FAA AC 150/5345-46
Isolation Transformers for Airport Lighting ..... FAA AC 150/5345-47

Alphabetical Index

Subject **Page No.**

Alignment 2
Controls 5
Description 2
Equipment 4
Existing Installations 2
Fixtures. 4
General Information. 2
Installation Requirements 2
Installations 2
Intensity Control 4
Justification Requirements. 2
Locations. 4
Methods Of Installation. 2
Photometric Requirements. 4
Power. 4
Power And Controls 4
Purpose. 2
Related Facilities 2
Schedule Of Lighting Equipment For Taxiway Lighting For Runways Used As Taxiways 5
Spacing of Lights 4

Record of Applicable Technical Directives

None

1. GENERAL INFORMATION.

2. PURPOSE.

This Work Package (WP) contains the requirements for the taxiway lights for runways or portions of a runway regularly used as part of a taxiing route at night. These lights outline the route for taxiing to and from another operational runway or other location. The lights shall be provided in addition to the runway lights. These requirements are to be used for designing new taxiway light installations on runways or sections of runways. Existing installations for such runways may be used and maintained until upgrading or replacement is required.

3. JUSTIFICATION REQUIREMENTS.

The use of runways as taxiways should be avoided. Where it is necessary to use a runway or a section of runway as part of a regular taxi route during nighttime operations, that section of runway shall be provided with taxiway edge lights. Former runways or sections of runways which are no longer used as runways but are now used as taxiways should be reduced to standard taxiway width and be provided with standard taxiway lights and markings. Any variations from these requirements shall be approved in accordance with the procedures of WP002 00.

4. RELATED FACILITIES.

The taxiway lights for runways shall be in addition to the standard runway lights with separate fixtures and circuits. The taxiway lights shall be part of a the taxiway edge light system. Visual aids related to use of taxiway lights for runways used as taxiways are as follows:

a. High-Intensity Runway Edge Lights (HIRL) (WP004 05),

b. Taxiway markings (WP005 01),

c. Taxiway edge lights (WP005 02),

d. Taxiway guidance signs (WP005 04).

5. DESCRIPTION.

6. The taxiway lights for runways used as taxiways shall consist of lines of blue lights located along each side of the runway only in the sections used for taxiing. These lights shall be elevated lights except in areas where the arresting gear may damage elevated lights. In these areas semiflush taxiway lights should be used. The elevated lights shall be standard elevated taxiway lights and may be equipped with hoods to block out emitted light in directions not necessary to taxiing to reduce the “sea-of-blue” effect or in areas requiring tone down for security. The semiflush lights shall be omnidirectional blue. The taxiway lights for these runways shall be on a circuit which can be deenergized when the runway is not a part of the active taxi route. The taxiway centerline markings should extend onto the runway but shall be interrupted three feet from the runway markings (WP005 01).

7. INSTALLATIONS.

8. INSTALLATION REQUIREMENTS.

For installation details for the taxiway lights, refer to ~~MIL-HDBK-1023/1 and NAVFAC P-272~~**UFC 3-535-02**. General design and installation requirements are given below.

9. METHODS OF INSTALLATION.

The elevated lights may be mounted on light bases or on conduits in concrete foundations. All elevated lights shall be mounted on frangible couplings. The height of elevated lights shall be not more than 14 inches above the runway edge. The semiflush lights shall be installed on light bases. Since these lights are omnidirectional in azimuth, the only alignment required is that the lights be properly leveled when installed on the frangible couplings or bases. If hoods are used to shield the emitted light, the hoods shall be aligned to emit light parallel to and towards the runway. For airfields in areas with frequent occurrences of snow accumulations of more than six inches, it may be desirable to obtain approval by Naval Air Systems Command to raise the height of these taxiway lights. The additional height should be kept to the minimum acceptable to reduce the aircraft strike hazard. If the overall height is more than 24 inches above the edge of the runway, the taxiway lights may need to be located 25 feet or more from the runway edge. Raising the lights will require longer mounting nipples and may require longer cables between the secondary connector of the isolation transformers and the connections to lamps. Before procurement or arranging for installation, check with the light manufacturer for adequate strength of the fixtures and any special mounting requirements.

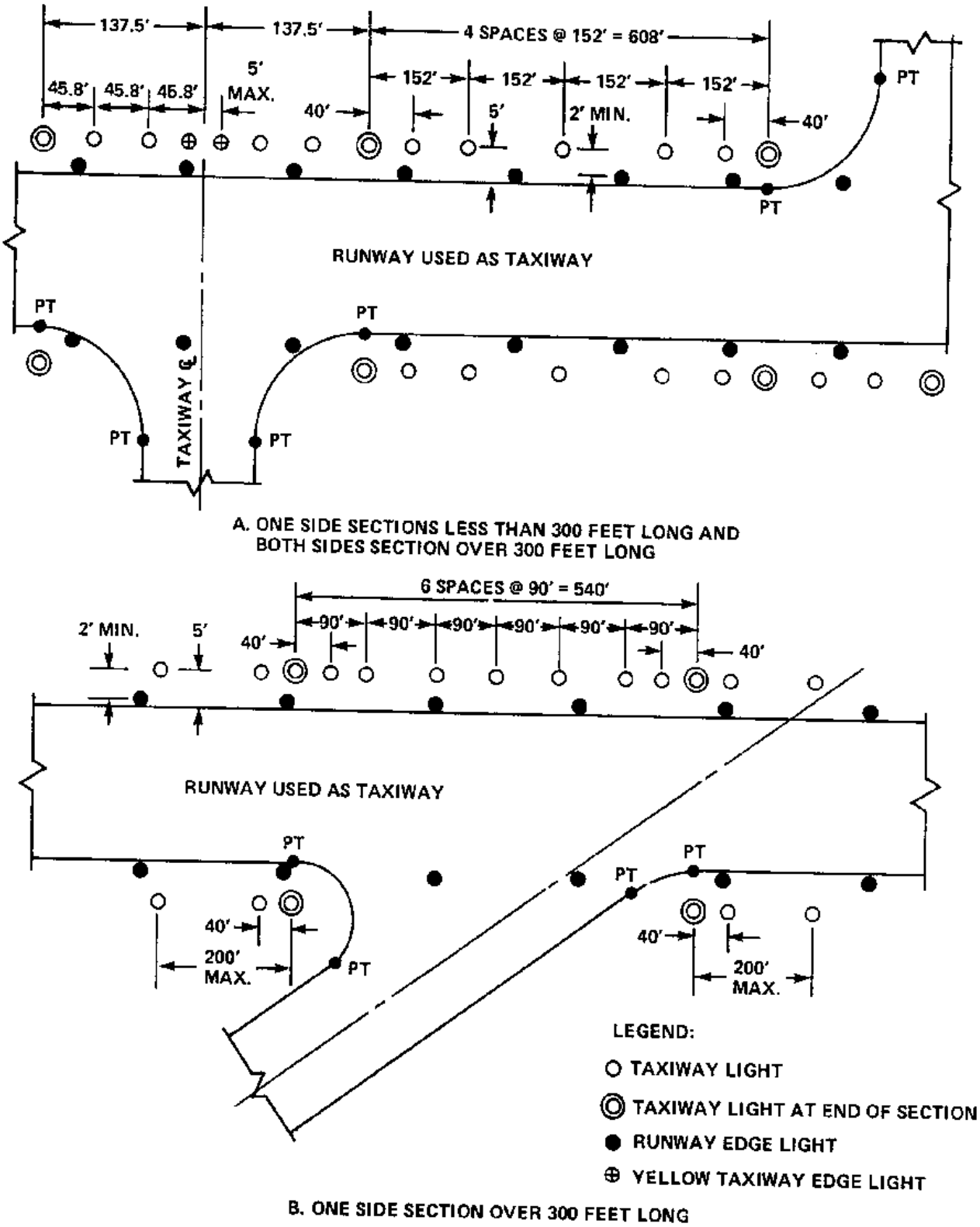

Figure 1. Examples of locations of taxiway lights for runways used as taxiways

10. LOCATIONS.

The taxiway lights for runways used as taxiways shall be located in straight lines along the edges of the runway. The lights shall be at a uniform distance, preferably 5 feet, outside the paved or marked edges of the runway but not less than 2 feet outside the line of runway lights (figure 1). The spacing of the taxiway lights shall be similar to that for straight sections of taxiways (WP005 02) with the spacing sections determined by whether the lights are along both sides of the runway or only one side. The length of sections for spacing are determined by the distance between the Points of Tangency (PT) on the same or opposite side of the runway of intersecting taxiways or other runways. For each section along the runway the lights shall be equally spaced except at the ends of sections where additional lights may be required. These additional lights are used to make a gradual transition to changes in spacing. Where the runway edges are parallel, each side of the section shall be the same length. All other sections shall be single edges and there may be more than one section in an area with a single edge. Where a taxiway terminates at the runway used as a taxiway, a pair of yellow lights shall be installed on the far side of the runway where the extended centerline of the taxiway intersects the line of taxiway lights unless this intersection is beyond the PT of the taxiway. The intersection of the taxiway centerline with the line of taxiway lights shall be the boundary for two sections of lights with a single edge, but the yellow lights shall be on each side and not more than 5 feet from the intersection. The spacing of taxiway lights for the runways used as taxiways shall be as follows:

a. Parallel Edges More than 300 Feet in Length. The spacing between lights shall be not more than 200 feet. In each of the end spaces on each side of the runway, an additional light shall be installed 40 feet from the end of the section. The lights on opposite sides of the runway shall be a pair on a line perpendicular to the runway centerline. If for some reason it is not practical to install a light at the desired position, the pair of lights may be moved not more than 5 feet along the runway. If displacement for more than 5 feet is necessary, the distance for spacing should be divided into two sections. Examples for spacing of lights in these sections are shown in figure 1A.

b. Single or Parallel Edges 300 Feet or Less in Length. The lights in these sections shall be spaced equally at not more than 50 feet. If the section has parallel edges, the lights on opposite sides of the runway shall be in pairs on lines perpendicular to the runway centerline. Examples of spacings for these sections are shown in figure 1A.

c. Single Edges More Than 300 Feet in Length. The spacings between lights shall be not more than 100 feet. In each end space an extra light shall be installed 40 feet from the end of the section. Examples of spacings for these sections are shown in figure 1B.

11. EQUIPMENT.

12. FIXTURES.

The light fixtures are usually the elevated type, but where needed, semiflush lights may be used. The fixtures and equipment to be used are listed in table 1. Typical fixtures are shown in figures 2 and 3. The use of hoods for shielding is optional.

13. PHOTOMETRIC REQUIREMENTS.

The emitted light from the taxiway edge light fixtures shall be omnidirectional in azimuth. The color of the emitted light shall be aviation blue or aviation yellow in accordance with ICAO, Annex 14, Vol. 1, App. 1. Not less than two steps of intensity shall be provided with the lowest step not more than ten percent of the rated intensity. The intensity for these elevated lights shall be not less than 2 candelas for vertical angles between 0 and 6 degrees above the horizontal and not less than 0.2 candela at all other angles above horizontal. The intensity of the semiflush lights shall be not less than 2 candelas for vertical angles between 1 and 8 degrees above horizontal, except a reduction of 25 percent is allowed for not more than six structural ribs.

14. POWER AND CONTROLS.

15. POWER.

The electrical power for the taxiway lights shall be provided by the 6.6-ampere series circuits (WP009 00). The constant-current regulators shall have not less than three intensity steps (WP009 02). The lights shall be connected to the primary series circuit by individual series-series isolation transformers (WP009 03). The taxiway lights for runways providing access to and from instrument runways shall be provided with secondary or emergency power (WP009 01). This emergency power shall be equipped to automatically transfer power in less than 15 seconds after failure of primary power.

TABLE 1. SCHEDULE OF LIGHTING EQUIPMENT FOR TAXIWAY LIGHTS FOR RUNWAYS USED AS TAXIWAYS

Purpose Type of Fixture	Lamp Rating and Type	Isolation Transformer	
		Rating	FAA Type AC150/5345-47
Elevated lights, omnidirectional, blue, type is optional.[1/]			
FAA AC 150/ 5345-46, Type L-861T, mode 1	45W 6.6A,[2/] type as determined by manufacturer.	30/45W 6.6/6.6A	L-830-1
Hoods or shields, types as provided by manufacturer or from commercial sources.			
Semiflush lights, omnidirectional, blue.[1/]			
FAA AC 150/ 5345-46, Type L-852E, mode 1, with blue filter, preferred.	6.6A, watts and type as determined by manufacturer.	6.6/6.6A, watts as required for the lamp.	L-830-1

[1/] Number of lights required varies with taxiway length and spacing.

[2/] 45W lamps are used for systems with intensity control. If intensity control is not provided, use 30W lamps.

16. CONTROLS.

The taxiway edge lights shall be remotely controlled from the airfield control panel (WP009 05) in the air traffic control tower with an alternate control station in the lighting control vault. Two or three steps of intensity control shall be provided with the intensity at the lowest setting not more than 10 percent of the intensity at rated current. The taxiway lights for runways used as taxiways shall provide for energizing these lights separately from the other taxiway lights. The controls for these lights shall be interconnected with these runway lights so the taxiway lights cannot be energized when the runway lights are operating. This control is usually provided by circuit selector switches (WP003 06), and may be part of a facsimile type control panel for ease in selecting the taxi route.

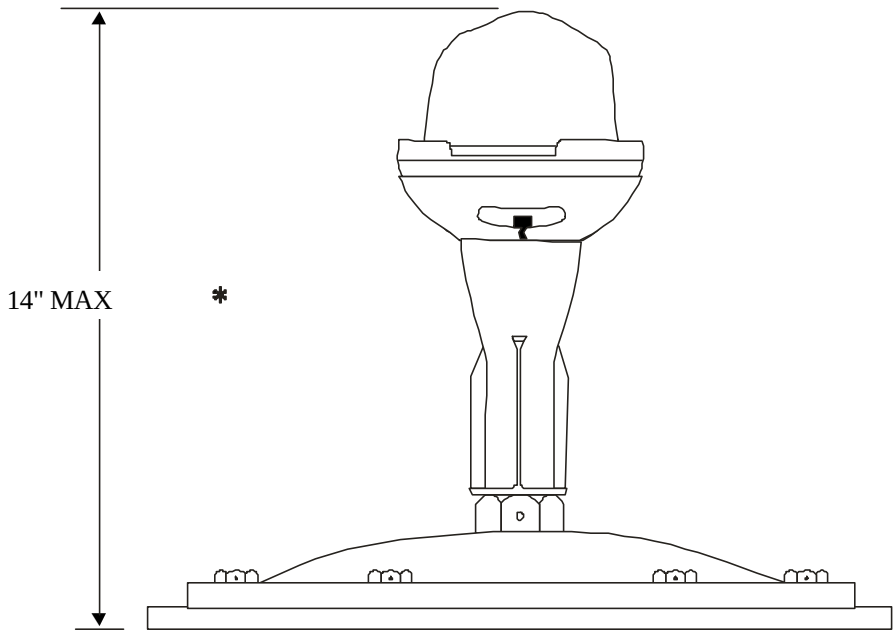

DIMENSIONS ARE FOR REFERENCE ONLY

LIGHT: ELEVATED, 45W 6.6A, FAA AC 150/5345-46, TYPE L-861T, BLUE

LAMP: 45W, 6.6A, TYPE AS DETERMINED BY MANUFACTURER

GLOBE: BLUE

ISOLATION TRANSFORMER: 30/45W 6.6/6.6A,
FAA AC 150/5345-47, TYPE L-830-1

MOUNTED ON FRANGIBLE COUPLING, MAY BE EITHER ON LIGHT BASE OR CONDUIT.

*** NOTE: FOR AREAS OF DEEP ACCUMULATIONS OF SNOW, THE HEIGHT MAY BE A MAXIMUM OF 24 INCHES.**

Figure 2. Typical elevated taxiway lights for runways used as taxiways, FAA L-861T

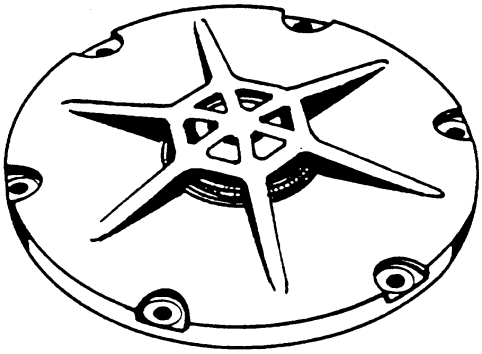

FIXTURE: FAA AC 150/5345-46,
TYPE L-852E, MODE 1, 45W 6.6A.

LAMP: 45W, 6.6A, TYPE AS REQUIRED
BY THE MANUFACTURER.

FILTER: AVIATION BLUE.

ISOLATION TRANSFORMER: 30/45W 6.6/6.6A,
FAA AC 150/5345-47, TYPE L-830-1

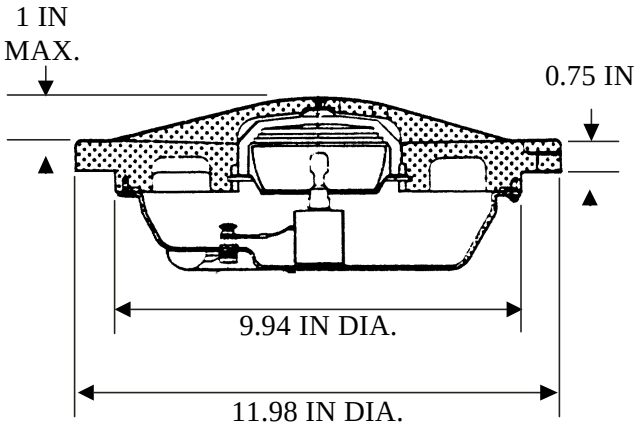

DIMENSIONS ARE FOR REFERENCE ONLY

Figure 3. Typical semiflush taxiway lights for runways used as taxiways

TECHNICAL MANUAL

SPECIAL LIGHTS AND MARKINGS VISUAL AIDS

SHOREBASED AIRFIELDS

Reference Material

Introduction 002 00
~~Definitive Designs for Naval Shorebased Facilities ..... NAVFAC P-272~~
Apron and Parking Area Markings 006 01
Apron and Parking Area Lights 006 02
Wheels-up and Runway Wave-off Lights 006 03
Simulated Aircraft Carrier Deck Lights and Markings 006 04
Fueling Area Lights 006 05
Portable Emergency Airfield Lights 006 06
Design Drawings for Visual Air Navigation Facilities ..... UFC 3-535-02
~~Airfield Lighting ..... MIL-HDBK-1023/1~~
Marking of Paved Areas on Airports ..... FAA AC 150/5340-1
Standards for Specifying Construction of Airports ..... FAA AC 150/5370-10

Alphabetical Index

Subject **Page No.**

Description Of Special Visual Aids. 2
Existing Installations 2
General Information. 1
Implementation 2
Purpose. 1
Scope 2
Selection Of Special Visual Aids. 2
Special Lights And Markings Visual Aids Requirements 2
Standardization. 2

Record of Applicable Technical Directives

None

1. GENERAL INFORMATION.

2. PURPOSE.

This Work Package (WP) contains the requirements for markings, lights, and signs for aprons and parking areas and for special purposes at other areas of the airfield. The purpose of these visual aids is to provide guidance to pilots for safe and efficient aircraft maneuvering in parking and service areas, illumination for servicing areas, and visual aids for special types of aircraft ground operations. These visual aids are often task oriented, related to safety, servicing, and training, rather than part of the integrated surface movement operations. The information must be easily recognized and used in fair weather and in restricted visibility conditions, day or night, to the operating minimums authorized for the airfield.

3. SCOPE.

The special lights and markings visual aids section of this Technical Manual contains the configuration requirements, specific applications, basic design and installation criteria, and equipment required for special operations of Navy shorebased airfields. Instead of standardization into an integrated system these aids must be adapted to fit individual installation and operational requirements of the airfield. The requirements contained in the Work Package(s) (WP) for each visual aids system provide guidance for all personnel servicing existing systems or when designing new installations. Existing installations of similar aids may be used and maintained as installed. Extensions, major modifications, or upgrading of existing installations shall comply with the basic requirements of the WP; however, adaptations of the system requirements may be necessary at some airfields.

4. STANDARDIZATION.

The WP for each visual aid system establishes the requirements to be used for most Navy airfields. By combining the WPs for the special visual aids required for the mission and special characteristics of the airfield, standardization of these visual aids for Navy airfields is attained. When deviations from defined requirements are necessary, these changes shall be authorized in accordance with the approval procedures of WP002 00.

5. DESCRIPTION OF SPECIAL VISUAL AIDS.

6. The special visual aids consist of markings, lights, and signs installed on or near a particular area. The apron and parking area lights and markings, including fueling area lights, provide the guidance to pilots for maneuvering in a congested area. The wheels-up and wave-off lights provide illumination for detecting unsafe conditions for aircraft and present a strong visual signal for a pilot to abort a landing. The simulated carrier deck lights and markings provide the visual aids for training and practicing carrier type approaches and landings. The portable emergency lights provide standby lights for runway and taxiway lights that have failed or are not available.

7. SELECTION OF SPECIAL VISUAL AIDS.

The types of special visual aids required depend on the mission and the arrangement of apron and service areas of the airfield. Table 1 is a guide for determining the aids to be provided. The design requirements are found in the WP for each type of taxiway aid. In designing the system of special visual aids, the effort must be coordinated with ground control. For installation details refer to FAA AC 150/5340-1 and AC 150/5370-10 for apron, parking area, and carrier deck markings, and to ~~MIL-HDBK-1023/1 and NAVFAC P-272~~**UFC 3-535-02** for lights and signs.

8. IMPLEMENTATION.

The WP and requirements of this section of the Technical Manual are not intended to direct or request implementation but are to establish uniformity when implementation is undertaken.

TABLE 1. SPECIAL LIGHTS AND MARKINGS VISUAL AIDS REQUIREMENTS

Special Visual Aids System	Authorized Operations				
		IFR Category			
	VFR	Non-Prec	I	II	III
Apron Markings (WP006 01)	C	C	C	R	R
Apron Lights (WP006 02)	R	R	R	R	R
Wheel-up Lights, Intersections (WP006 03)	OPT	OPT	OPT	NR	NR
Wave-off Lights (WP006 03)	OPT	OPT	OPT	OPT	OPT
Simulated Aircraft Carrier Deck Lights and Markings (WP006 04)	RS	RS	~~NR~~**RS**	~~NR~~**X**	~~NR~~**X**
Fueling Area Lights (WP006 05)	RS	RS	RS	RS	RS
Portable Emergency Lights (WP006 06)	OPT	OPT	NR	NR	NR

C - Recommended
R - Required
RS - Required under special conditions. * Example: Simulated carrier deck lights and markings.
OPT - Option as recommended by air station commander and approved by NAVAIR.
NR - Not Required.
X - Not recommended.

TECHNICAL MANUAL

APRON AND PARKING AREA MARKINGS

SHOREBASED AIRFIELDS

Reference Material

~~Paint, Traffic and Airfield Marking, Solvent Base ..... FED-TT-P-85~~
~~Paint, Traffic, Black (Nonretroreflectorized) ..... FED-TT-P-110~~
Introduction 002 00
Taxiway Markings 005 01
Taxiway Guidance Signs 005 04
Colors FED-STD-595
Apron and Parking Area Lights 006 02
Beads (Glass Spheres), Retroreflective FED-TT-B-P-1325
Paint, Traffic and Airfield Marking, Water Emulsion Base FED-TT-P-1952
Marking of Paved Areas on Airports ..... FAA AC 150/5340-1
Standards for Specifying Construction of Airports ..... FAA AC 150/5370-10

Alphabetical Index

Subject **Page No.**

Borders For Markings 6
Centerline Markings 2
Description 2
Edge Markings 5
Existing Installations 2
General Description. 2
General Information. 2
Installation Requirements 6
Installations 6
Justification Requirements. 2
Materials. 6
Materials For Apron And Parking Area Markings 6
Parking Area Markings. 5
Photometric Requirements. 6
Purpose. 2
Related Facilities 2
Shoulder Or Deceptive Area Markings 5
Special Apron Markings. 5

Record of Applicable Technical Directives

None

1. GENERAL INFORMATION.

2. PURPOSE.

This Work Package (WP) contains the requirements for the markings of aprons and parking areas on shorebased airfields. The markings provide visual cues to pilots for taxiing through a complex or congested area between the end of the taxiway and the final position for parking the aircraft. There may be several destinations in this area including terminals, hangars, service areas, and taxiways. The apron markings include taxilane centerline and edge markings, shoulder or deceptive area markings for paved areas not intended for aircraft traffic, parking area markings, and special markings to identify destinations or to provide specific information. Taxilanes are specified taxiing areas or taxiways across larger paved areas. These markings shall be used for all new or resurfaced apron and service areas and at any time the existing markings are to be repainted. Existing markings may continue to be used until the markings are repainting.

3. JUSTIFICATION REQUIREMENTS.

Apron markings are the basic visual aid for taxiing in the apron area during daylight and to supplement the lights during night operations and for all meteorological conditions. Often taxilanes are used in these areas instead of specific taxiways. These markings should be easily interpreted and standardized where possible. The centerline, edge, and shoulder markings are similar to the taxiway markings, but parking area and identification markings shall be customized for the airfield. All paved taxiways and taxilanes in the apron area shall be provided with centerline markings and if needed with edge and shoulder markings. The use of parking area and spot identification markings are optional for the airfield. Additional markings or modifications may be approved for special operating conditions (WP002 00).

4. RELATED FACILITIES.

This WP includes the standard apron markings and recommendations that may be used for parking area and special information markings. These markings are related to other visual aids as follows:

a. Taxiway markings (WP005 01),

b. Apron and parking area lights (WP006 02),

c. Taxiway guidance signs (WP005 04).

5. DESCRIPTION.

6. GENERAL.

The apron and parking area markings consist of a system of markings identified by the functions which they serve. The elements of these taxiway markings are as follows:

a. Centerline markings: Required for all taxiways and taxilanes.

b. Edge markings: Optional where needed to mark the edge of full strength pavement or of taxilanes through wider paved areas.

c. Shoulder markings: Optional for paved areas which are not intended for aircraft traffic and are not adequately recognized by natural contrast or edge markings.

d. Parking area markings: Optional.

e. Special identification and information markings: Optional.

These markings shall be painted in the specified color on the pavement surface. The markings configurations shall be as shown in figures 1 and 2.

7. CENTERLINE MARKINGS.

(See figure 1.) The centerline markings shall be a continuous retroreflective yellow stripe not less than 6 inches wide located along the taxiway or taxilane axis. If centerline lights are installed, the centerline stripe may be located not more than 12 inches from the centerline of the taxiing area to avoid painting over the lights. These markings provide identification of a taxiway or taxilane and longitudinal guidance for steering the aircraft. These markings may continue across intersecting taxilanes or curve into the intersecting taxiways and taxilanes to indicate turns which are frequently used. On curved sections of these markings, the curves of the markings shall be smooth and the markings shall be not less than one-half the width of the taxilane from the edge of the pavement. The radius of curves of the taxilane centerlines and lead-in and lead-out markings to parking spots shall be 100 feet or more. One-way taxilanes and lead-in and lead-out lines may be marked with arrows indicating the direction of the travel. These arrows shall be chevrons centered on the centerline with the base of the chevron 3 feet wide and the apex of the chevron 5 feet from the base. The wings of the chevrons shall be not less than 6 inches wide. The apex of the chevron shall

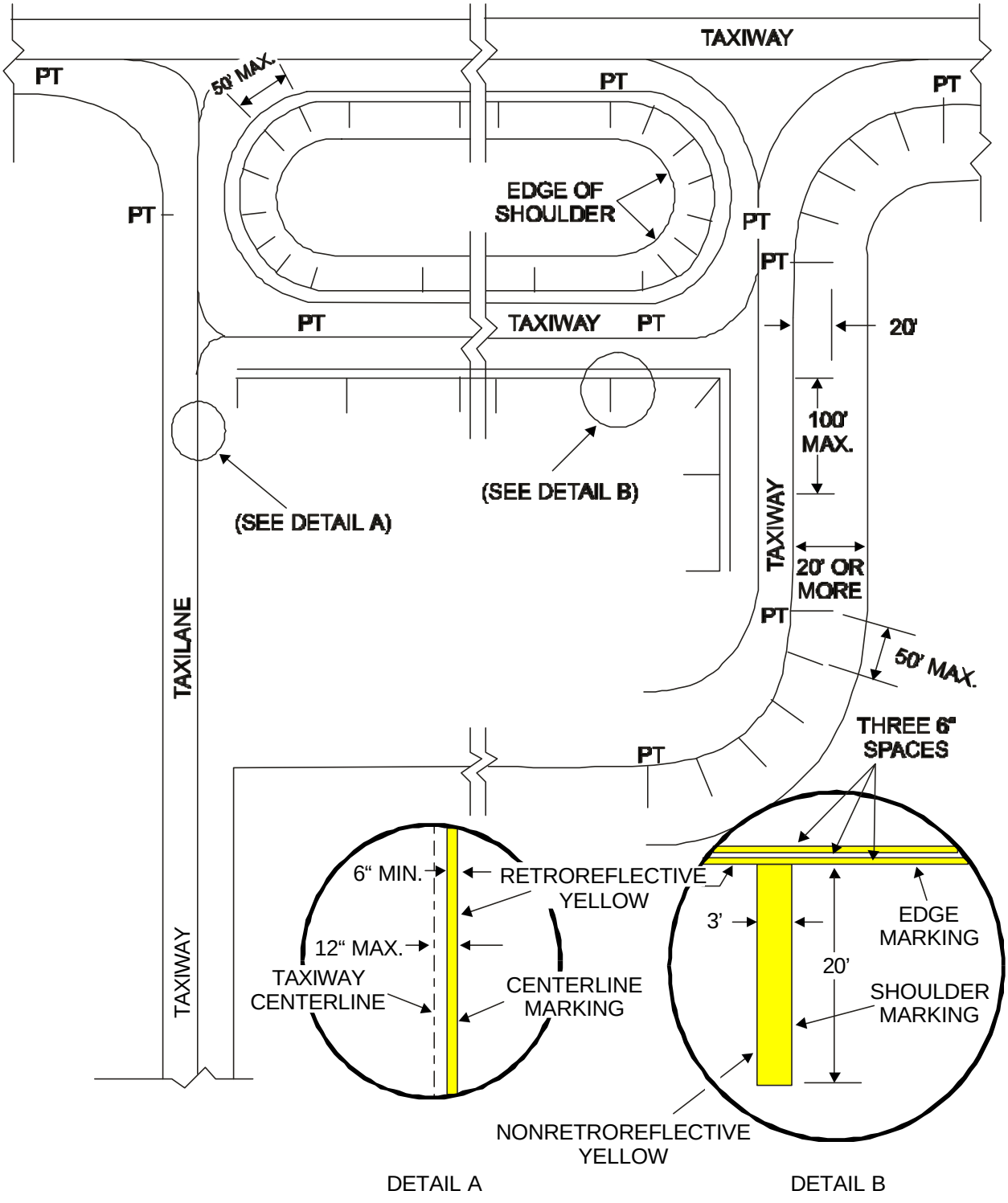

Figure 1. Examples of apron centerline, edge, and shoulder or deceptive area markings

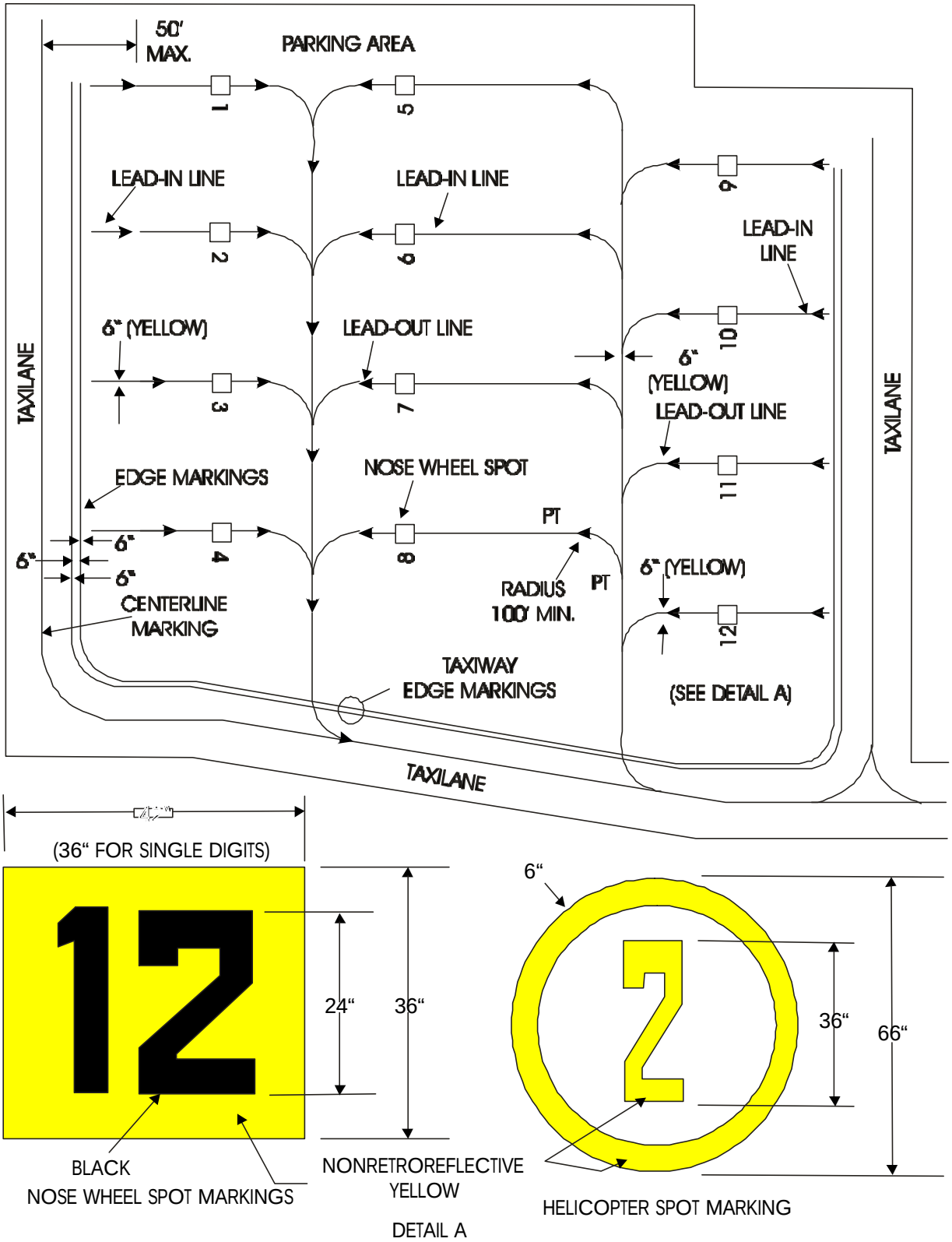

Figure 2. Examples of parking area markings

be on the axis of the centerline marking, and, if marking the exit from a taxilane, shall be not more than 50 feet from the taxilane centerline (see figure 2). For long taxilanes and lead-in and lead-out lines, additional chevrons may be installed preferably at not greater than 200-foot intervals.

8. EDGE MARKINGS.

(See figure 1.) Edge markings are installed only where the visual contrast between the edge of the full strength pavement or designated edge of taxilanes and the adjoining area is such that pilots may tend to run off the taxiing area. These edge markings shall consist of a pair of continuous parallel retroreflective yellow stripes. The stripes shall be 6 inches wide and 6 inches apart with the outer edge of the outer stripe along the edge of the full strength or designated edge of the taxiway or taxilane. If necessary, the edge markings may be located not more than 2 feet inside the taxiway edge. Where used, the edge markings may be placed along one or both sides of the taxiing area.

9. SHOULDER OR DECEPTIVE AREA MARKINGS.

The shoulder or deceptive area markings are used, if needed, to mark stabilized shoulders which are not full strength pavement or areas where aircraft taxiing is undesirable. Edge markings usually provide adequate indication of the edge of the taxilane; however, in some areas such as stabilized islands in apron areas or along some curves, shoulder markings may be needed. These markings shall be nonretroreflective yellow bars painted on the shoulder surface or deceptive area (see figure 1). These bars shall be not less than 3 feet wide and perpendicular to the taxiing area edge and extending outboard. The length of the bars shall be 20 feet or to the outer edge of the shoulder paving whichever is less. Along sections of straight edges, the shoulder marking bars shall be equally spaced not more than 100 feet apart with a bar at the PT of a curve or at the end of the edge or shoulder paving. On curves the bars shall be equally spaced along the edge not more than 50 feet apart.

10. PARKING AREA MARKINGS.

Markings for parking areas, if needed, provide more effective use of the available area. These markings shall consist of one or more elements as follows:

a. Nose wheel spots,

b. Spot identification markings,

c. Lead-in lines,

d. Lead-out lines,

e. Wing tip trace lines,

f. Helicopter spots and identification markings.

Examples of these parking area markings are shown in figure 2. The elements used for a particular parking area may vary with the types of aircraft, mixture of aircraft types, operating missions, and access to and from the parking area. The color of the markings for spots and lines shall be nonretroreflective aviation yellow. The nose wheel spots shall be solid yellow squares or rectangles located at the desired position for the nose wheel when parked. For spots without identification or for single digit identification the squares shall have 36-inch sides. For two digit identification markings, the rectangles shall be 36 inches by 42 inches. If the nose wheel spots are identified, the number or letter shall be black paint centered on the spot and not less than 24 inches high. The lead-in lines shall be continuous, not less than 6 inches wide, and follow the desired taxi path to the spot. Lead-out lines are similar to lead-in lines and are used where a specific path other than the lead-in line is desired for departing from the parking area. For large aircraft the use of continuous yellow wing tip trace lines to mark the safe limits for the wing tips during maneuvering in the parking area may be installed. The wing tip trace line shall be not less than 6 inches wide and along a smooth curve providing the minimum safe clearance from other parking areas or obstructions. For helicopter parking, yellow circles should be used to mark the parking spot. The circle shall be not less than 66 inches outside diameter and the marking shall be not less than 6 inches wide. A yellow numeral not less than 36 inches high centered inside the circle shall be used for helicopter spot identification. A 6-inch wide yellow line extending out from the spot circle may be used to indicate the alignment of the tail for helicopter parking.

11. SPECIAL APRON MARKINGS.

To provide identification of areas or specific instructions and information, nonstandard markings may be used in the apron area. These markings shall be nonretroreflective yellow and of the size and location determined as practical. These markings should not be confused with the standard markings. They may be coordinated with taxiway guidance signs.

TABLE 1. MATERIALS FOR APRON AND PARKING AREA MARKINGS

Color of Marking	Federal Specification	Authorized Use
Retroreflective Yellow	~~TT-P-85[1/] or~~ TT-P-1952, paint, FED-STD-595, chip No. 23538, and TT-B-1325 glass spheres, type III, gradation A.	Taxilane centerline, and taxilane edge markings.
Nonretroreflective Yellow	~~TT-P-85[1/] or~~ TT-P-1952 paint, FED-STD-595, chip No. 23538.	Shoulder and deceptive areas, parking area, and special apron markings.
Nonretroreflective Black	~~TT-P-110[1/]~~ Paint, FED-STD-595, chip No. 27038.	Nose wheel spot identification and borders around yellow markings.

~~[1/] Some area authorities may prohibit or restrict the use of this type of paint.~~

12. BORDERS FOR MARKINGS.

For some installations, the apron and parking area markings do not provide sufficient contrast with the surrounding pavement for easy recognition. In such cases, the contrast can be improved by outlining the markings with a nonglossy black border. The borders shall be not less than 6 inches wide.

13. INSTALLATIONS.

14. INSTALLATION REQUIREMENTS.

For installation details and requirements for some apron markings, refer to FAA AC 150/5340-1 and FAA AC 150/5370-10. The general requirements are given under Paragraphs 5 through 12 of this WP.

15. MATERIALS.

The materials required for apron and parking area markings are paint and retroreflective spheres (beads). The approved materials and colors are shown in table 1. Regulations of some states, such as California, or other area authorities may prohibit or restrict the use of solvent base paints. For the yellow markings, ~~this may require using~~**use** type TT-P-1952 ~~instead of type TT-P-1952~~ paint. For the slower drying type TT-P-1952 paint, timing of application of retroreflective beads (spheres) may be required to assure adherence of the beads without sinking too deeply into the paint. ~~Also the black, type TT-P-110 paint may be restricted, but any long-wearing semigloss or flat black paint, such as type TT-P-1952 with black pigment and suitable for the surface may be substituted.~~

16. PHOTOMETRIC REQUIREMENTS.

The apron markings shall be airfield marking paints of the aviation surface colors in accordance with FED-STD-595. The specific colors shall be as follows:

a. Yellow, color chip No. 23538,

b. Black, color chip No. 27038.

TECHNICAL MANUAL

APRON AND PARKING AREA LIGHTS

SHOREBASED AIRFIELDS

Reference Material

Introduction 002 00
~~Definitive Designs for Naval Shore Facilities ..... NAVFAC P-272~~
Taxiway Edge Lights 005 02
Taxiway Centerline Markings 005 03
Apron and Parking Area Markings 006 01
Fueling Area Lights 006 05
Electrical Power and Control for Visual Aids 009 00
Constant-Current Regulators 009 02
Isolation and Distribution Transformers 009 03
Design Drawings for Visual Air Navigation Facilities ..... UFC 3-535-02
~~Airfield Lighting ..... MIL-HDBK-1023/1~~
Aeronautical Ground Light and Surface Marking Colors ..... ICAO, Annex 14, Vol. 1, App. 1
Lights, Airport, Semiflush, General Specifications MIL-T-26202
Specification for Runway and Taxiway Light Fixtures ..... FAA AC 150/5345-46
Isolation Transformers for Airport Lighting ..... FAA AC 150/5345-47

Alphabetical Index

Subject **Page No.**

Aiming Floodlights 3
Centerline Lights For Taxilanes 2
Controls 5
Description 2
Equipment 5
Existing Installations 2
Fixtures. 5
Floodlighting Installation. 3
Floodlights 2
General Information. 2
Installation Requirements 3
Installations 3
Intensity Requirements For Taxilane And Peripheral Lights 10
Justification Requirements. 2
Peripheral Lights. 2
Peripheral Lights Installation. 3
Photometric Requirements. 5
Power. 5
Power And Controls 5
Purpose. 2
Related Facilities 2
Schedule Of Equipment For Apron Lights 6
Taxilane Lights Installation. 3

Record of Applicable Technical Directives

None

1. GENERAL INFORMATION.

2. PURPOSE.

This Work Package (WP) contains the requirements for the apron and parking area lights. These lights provide the illumination and visual aids for the pilot to guide his aircraft into position for loading, servicing, and parking. They also provide illumination to perform such tasks as aircraft loading, unloading, fueling, and maintenance. The area involved is between the ends of the taxiways and the final parking areas where aircraft are maneuvered or positioned for servicing outside of buildings and hangars. These areas are called aprons and may be defined as areas for ground operations of aircraft not involving landing, taxiing, and taking off. The apron and parking area lights provide three functions:

a. Assist in taxiing and maneuvering the aircraft,

b. Provide illumination for the servicing tasks,

c. Provide illumination for security.

The lights for these functions include permanently installed fixtures and portable lights. Portable lights may vary from flashlights to banks of floodlights. This WP contains the requirements for the permanent lighting only. These lights include floodlights, taxilane centerline lights, and peripheral lights. These requirements shall be used for new apron light installations. Existing systems may be used and maintained until upgrading or major replacements are required.

3. JUSTIFICATION REQUIREMENTS.

The apron areas may vary greatly and the need for a particular type of lighting system varies with the mission, types of aircraft, number of operations at night, and size and arrangement of the aprons. The apron lights shall be tailored for the needs of the airfield. Most airfields with operations at night will require one or more systems of these apron light systems and shall adapt the system requirements to provide adequate lighting and guidance. The requirements of this WP are guidelines for lighting installations; however, variations from specific requirements shall be approved in accordance with the procedures of WP002 00.

4. RELATED FACILITIES.

The apron lights provide illumination and visual guidance for aircraft operations at night in the apron and parking areas. Other visual aids related to the use of apron and parking area lights are as follows:

a. Apron and parking area markings (WP006 01),

b. Fueling Area Lights (WP006 05),

c. Taxiway edge lights (WP005 02),

d. Taxiway centerline lights (WP005 03).

5. DESCRIPTION.

6. The apron and parking area lighting may consist of floodlights only or a combination of floodlights, taxilane centerline lights, and peripheral lights. The floodlights provide area illumination and the other lights mark designated taxilanes or the edges of the apron.

7. FLOODLIGHTS.

Floodlights are fixtures (luminaires) that provide overall illumination and may be aimed to illuminate a particular area. Aprons, parking areas, and service areas shall be uniformly illuminated at the required levels. The floodlighting should come from more than one direction to reduce shadows. The distribution of the light from the fixtures shall prevent direct or “spill” light above the horizontal and limit the intensity towards the control tower and areas for operating aircraft to avoid glare. Location of fixtures, aiming, shielding, and mounting height may be used to control spill light and glare. The color of the light shall be such that materials, liquids, and markings used in servicing aircraft will be recognizable in the floodlighting. One or more fixtures may be mounted on a single support. For activities requiring higher levels of illumination, portable lights shall be used.

8. CENTERLINE LIGHTS FOR TAXILANES.

Taxilanes are marked routes across large paved areas intended for taxiing aircraft. In some areas of aprons the taxilanes may not be sufficiently illuminated by floodlights and taxilane lights are required at night. Centerline lights similar to taxiway centerline lights (WP005 03) are used for taxilanes. The centerline lights shall be semiflush, bidirectional, and emitting green light.

9. PERIPHERAL LIGHTS.

Some sections of the edges of apron areas may require lights to mark the edge. The peripheral lights shall be blue omnidirectional lights. Elevated lights shall be used, if permitted, but semiflush lights may be required for some installations. These lights are the same types as are used for taxiway edge lights (WP005 02).

10. INSTALLATIONS.

11. INSTALLATION REQUIREMENTS.

For installation details for the apron lights refer to ~~NAVFAC P-272 and MIL-HDBK-1023/1~~**UFC 3-535-02**. General design and installation requirements are given below.

12. FLOODLIGHTING INSTALLATION.

Floodlights provide general illumination of an area. The floodlights for apron area illumination shall be mounted not less than 30 feet above the pavement and preferably 50 feet or higher. The floodlights may be mounted on buildings, poles, towers, or pylons. The mountings shall be stable with the axes of the beams changing less than five degrees in gale force winds. One or more floodlight fixtures may be located on the same support, but lights shall be spaced along the apron and aimed to provide uniform illumination and to reduce the effects of shadows from aircraft or equipment. The floodlights shall be aimed to provide uniform illumination over the high activity areas of the apron. Spill light above the horizontal or any direct light or glare towards the control tower or runways and taxiways shall be prohibited. Louvers, grids, baffles, or higher mounting of the lights may be used to shield the spill light. The installation shall provide access to the lights for maintenance.

13. TAXILANE LIGHTS INSTALLATION.

The installation of taxilane centerline lights is similar to that for taxiway centerline lights (WP005 03) except the spacings shall be not more than 100 feet. These lights shall be semiflush bidirectional green lights.

14. Centerline lights shall be located along a line or smooth curves on the taxilane axis (figure 1). At taxilane intersections the line of lights shall extend across the junction with an omnidirectional light located at the intersection of centerlines although the other taxilane may not be lighted. If both taxilanes are lighted, lights into the intersecting taxilane may be installed along an arc between the Points of Tangency (PT) that provides a clearance from the taxilane edge not less than one-half the width of the taxilanes. The centerline lights shall be equally spaced within each section for spacing. The line of lights is divided into spacing sections between any two consecutive points as follows:

a. End of centerline,

b. Point of Tangency (PT),

c. Intersections of centerline at taxilane junctions.

For straight sections, the spacing shall not exceed 50 feet for sections less than 300 feet long and not exceed 100 feet for sections 300 feet or longer. For curved sections, the spacing shall not exceed 25 feet if the radius of the curve is less than 400 feet long and shall not exceed 50 feet if the radius is 400 feet or longer. These lights may be base-mounted with individual isolation transformers or direct mounted in holes drilled in the pavement with 3 or 4 lights on a 200-watt isolation transformer. The axis of the beams shall be aligned in azimuth parallel to the centerline for straight sections and perpendicular to the radius through this point for curved sections.

15. PERIPHERAL LIGHTS INSTALLATION.

Peripheral lights are located at the edge of the apron usually off the full strength pavement. The lights are located in a line not more than two feet from the apron edge. The lights shall be equally spaced at intervals not more than 100 feet for straight sections and as shown below for curved sections. These lights shall be omnidirectional blue lights, usually of the elevated type, but some installations may require semiflush lights. The elevated lights shall be mounted on frangible couplings which may be installed on light bases or on conduit elbows. The height of elevated lights shall be not more than 14 inches above the apron surface except in areas with frequent accumulations of snow to depths of 12 inches or more where with approval by Naval Air Systems Command the maximum height shall not exceed 24 inches. To raise the height of these lights, use longer nipples and, if necessary, longer cables from the connections of the isolation transformers to the lamp. The manufacturer may be able to supply these items.

Curved Sections (Radius in feet)	Spacing, Max. (feet)
25 or less	17
26 to 50	24
51 to 75	30
76 to 100	36
101 to 150	42
150 to 200	49
over 200	50

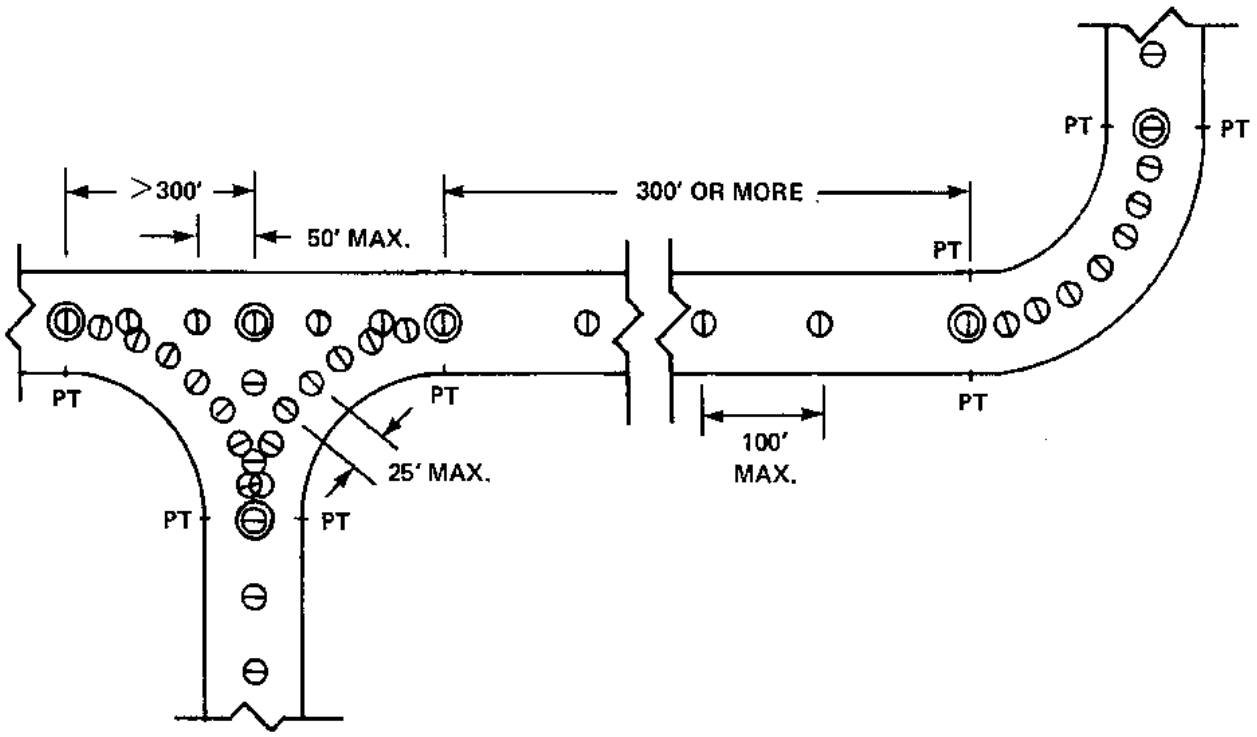

A. CENTERLINE LIGHTS, INTERSECTION BOTH LIGHTED

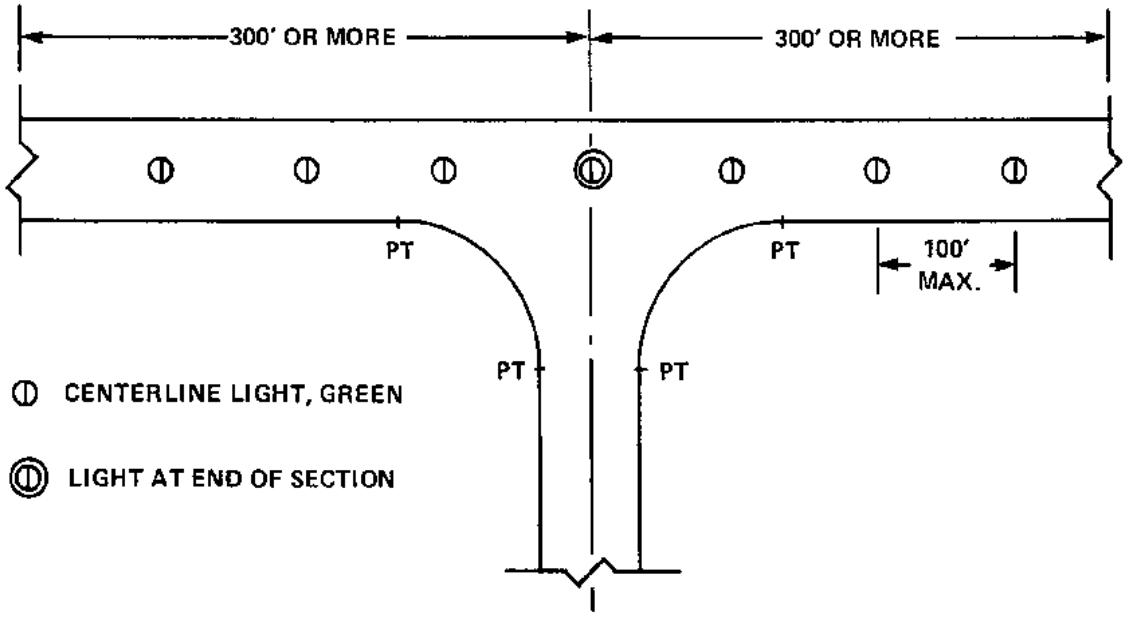

B. CENTERLINE LIGHTS, INTERSECTION, ONE LIGHTED

Figure 1. Typical taxilane centerline lights configuration

16. EQUIPMENT.

17. FIXTURES.

There are no specified fixtures for apron floodlights. Commercial type luminaires shall be specified in the design requirements. The taxilane and peripheral lights shall be types similar to taxiway lights. The fixtures and equipment to be used for apron and parking area lights are listed in table 1. Typical examples of taxilane and peripheral light fixtures are shown in figures 2, 3 and 4.

18. PHOTOMETRIC REQUIREMENTS.

The floodlighting for the apron, parking, and service areas shall provide an average illuminations level on the pavement between 1 and 2 footcandles for an area not less than 200 feet from the building line. The illumination shall be uniform with the ratio of the average level to the minimum not more than 6:1. Shadows shall be eliminated to the extent that is practical. Areas of the apron more than 200 feet from the buildings and structures may be illuminated at lower levels. The preferred color of the light is aviation white but other colors that retain easy recognition of surface markings for aircraft servicing and visual aids are acceptable. The emitted light from the taxilane centerline lights shall be aviation green and for the edge and peripheral lights shall be aviation blue in accordance with ICAO, Annex 14, Vol. 1, App. 1. The intensity and beamspread of the beams for these lights at rated current shall be as required in table 2.

19. POWER AND CONTROLS.

20. POWER.

The electrical power for the apron lights depends on the light circuits to be installed. Floodlights will be energized by multiple circuits and taxilane and peripheral lights shall be energized by one or more 6.6-ampere series circuits (WP009 00). The electrical circuits for the floodlights should be three-phase, usually 277/480-volt multiple circuits. The lights shall be connected to the circuits to provide uniform lighting levels, balanced loads on the phases, and to reduce stroboscopic effects. The power for the taxilane and peripheral lights shall be furnished by one or more constant-current regulators (WP009 02) with 6.6-ampere output. The lights shall be connected to the primary series circuit by series-series isolation transformers (WP009 03). Each light may have an individual transformer or three or four lights to a 200-watt transformer. In the latter arrangement, the lights shall be provided with shorting devices to short out the light if the lamp fails.

21. CONTROLS.

The apron and parking area floodlighting is usually controlled by ground service personnel with ON-OFF switches. Taxilane centerline and peripheral lights shall be controlled in the Air Traffic control tower. For complex apron areas, the taxilane lights may be sectionalized to permit switching for specific taxi routes. Intensity control is not required but may be provided for the taxilane and peripheral lights.

TABLE 1. SCHEDULE OF EQUIPMENT FOR APRON LIGHTS[1/]

Purpose Type of Fixture	Lamp Rating and Type	Isolation Transformer Rating	Isolation Transformer FAA Type AC150/5345-47
Floodlights; types, number and rating are as required by the designer.			
Taxilane centerline lights; semiflush, bidirectional, green.			
For straight sections, FAA AC 150/ 5345-46, type L-852A, Mode 1, 45W 6.6A	45W 6.6A, type as determined by manufacturer.	30/45W 6.6/6.6A or 200W 6.6/ 6.6A for 4 lights	L-830-1 L-830-6
For curved sections, FAA AC 150/ 5345-46, type L-852B, Mode 1, 65W 6.6A	65W 6.6A, type as determined by manufacturer.	65W 6.6/ 6.6A or 200W 6.6/ 6.6A for 3 lights	L-830-3 L-830-6
Peripheral lights, omnidirectional, blue.			
Elevated lights. FAA AC 150/ 5345-46, type L-861T, Mode 1, 6.6A	45W 6.6A, type as determined by manufacturer.	30/45W 6.6/6.6A	L-830-1
Semiflush lights. FAA AC 150/ 5345-46, type L-852E, mode 1, with blue filter, preferred.	6.6A, watts and type as determined by manufacturer.	100W 6.6/6.6A	L-830-4

[1/] Number of lights required varies with taxiway length and spacing.

LIGHT: SEMI-FLUSH, BI-DIRECTIONAL OR UNI-DIRECTIONAL, FAA AC 150/5345-46 TYPE L-852A AND B, AS DETERMINED FOR STRAIGHT SECTIONS OR CURVES.

LAMP: 6.6A, WATTS AND TYPE AS DETERMINED BY THE MANUFACTURER.

FILTERS: AVIATION GREEN, TYPE AS DETERMINED BY APPLICATION.

ISOLATION TRANSFORMER: 6.6/6.6A, FAA AC 150/5345-47, WATTS AS REQUIRED BY THE LAMP. TYPE AS REQUIRED FOR THE WATTS.

COLOR OF EMITTED LIGHT IS AVIATION GREEN.

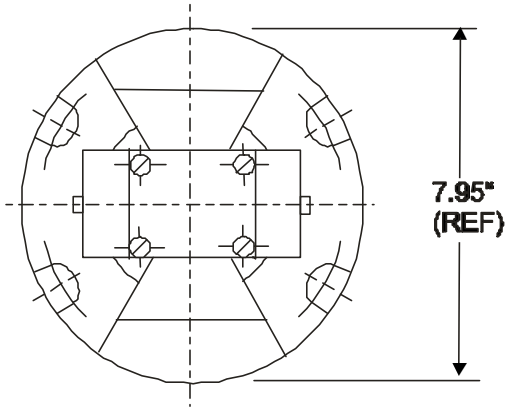

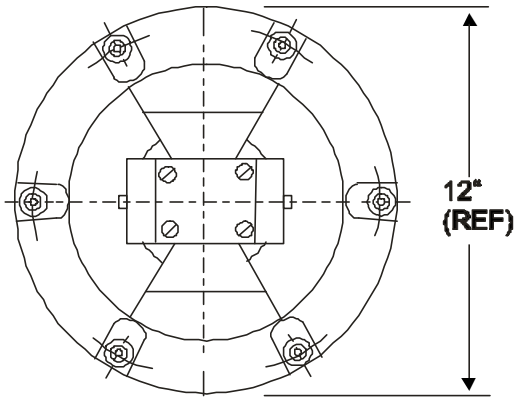

DIMENSIONS ARE FOR REFERENCE ONLY

Figure 2. Typical taxilane centerline light fixtures

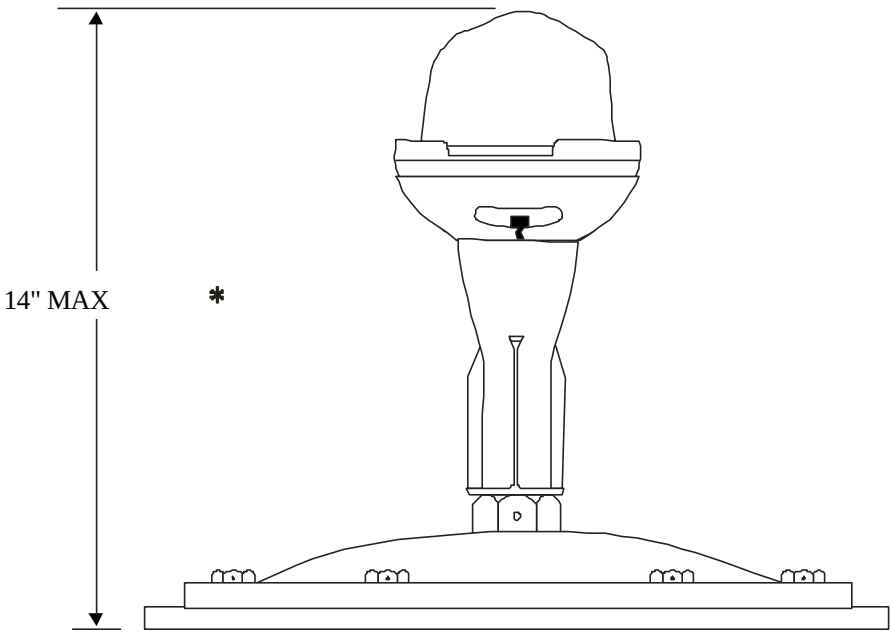

DIMENSIONS ARE FOR REFERENCE ONLY

LIGHT: ELEVATED, 45W 6.6A, FAA AC 150/5345-46, TYPE L-861T, BLUE

LAMP: 45W, 6.6A, TYPE AS DETERMINED BY MANUFACTURER

GLOBE: BLUE

ISOLATION TRANSFORMER: 30/45W 6.6/6.6A,
FAA AC 150/5345-47, TYPE L-830-1

MOUNTED ON FRANGIBLE COUPLING, MAY BE EITHER ON LIGHT BASE OR CONDUIT.

COLOR OF EMITTED LIGHT IS AVIATION BLUE

Figure 3. Typical elevated taxiway edge light, FAA L-861T

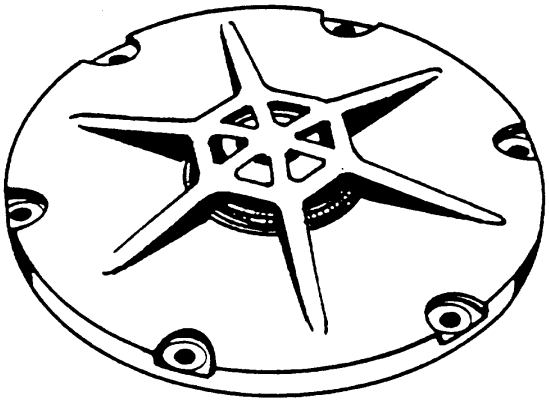

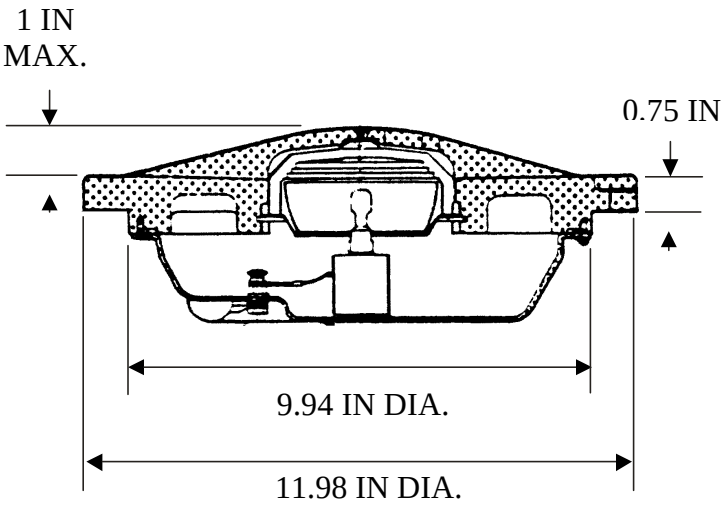

DIMENSIONS ARE FOR REFERENCE ONLY

FAA TYPE L-852E

FIXTURE: FAA AC 150/5345-46, TYPE L-852E, MODE 1, 45W 6.6A

LAMP: 6.6A, WATTS AS DETERMINED BY MANUFACTURER

FILTER: AVIATION BLUE

ISOLATION TRANSFORMER: 6.6/6.6A, WATTS AND TYPE AS REQUIRED BY LAMP

COLOR OF EMITTED LIGHT IS AVIATION BLUE

Figure 4. Typical semiflush peripheral lights

TABLE 2. INTENSITY REQUIREMENTS FOR TAXILANE AND PERIPHERAL LIGHTS

Type of Light	Main Beams Average, Min. (candelas)	Beamspread, Min. (degrees)	
		Horiz.	Vert.
Centerline, straight L-852A	20 green	±10	1 to 4
Centerline, curved L-852B	20 green	±30	1 to 4
Peripheral, L-861T	2 blue	Omni	0 to 6
Peripheral, L-852E	2 blue	Omni	1 to 8

TECHNICAL MANUAL

WHEELS-UP AND RUNWAY WAVE-OFF LIGHTS

SHOREBASED AIRFIELDS

Reference Material

Introduction 002 00
~~Definitive Designs for Naval Shore Facilities ..... NAVFAC P-272~~
Obstruction Markings 003 09
Obstruction Lighting 003 10
Optical Landing Aids (OLA) 003 13
Simulated Aircraft Carrier Deck Lighting and Marking 006 04
Electrical Power and Control for Visual Aids 009 00
Special Power Supplies 009 04
PAR-56 Lampholder FAA-E-982
Design Drawings for Visual Air Navigation Facilities ..... UFC 3-535-02
~~Airfield Lighting ..... MIL-HDBK-1023/1~~
~~Transformer, Power, Isolation, 2400/180 Volts ..... MIL-T-23682~~
Aeronautical Ground Light and Surface Marking Colors ..... ICAO, Annex 14, Vol. 1, App. 1
Light, Wave-off, Flashing, Capacitance-Discharge MIL-L-29575
~~Lampholder, PAR 46/64, Aviation Lighting ..... MIL-L-81015~~

Alphabetical Index

Subject **Page No.**

Aiming 5
Controls 6
Description 2
Dimensions 5
Equipment 6
Flashing Cycle 6
General Information. 2
Installation Requirements 2
Installations 2
Intensity Control 6
Justification Requirements. 2
Location And Dimensions 5
Methods Of Installation. 5
Photometric Requirements. 6
Power. 6
Power And Controls 6
Purpose. 2
Related Facilities 2
Runway Wave-Off Lights Description. 2
Schedule Of Lighting Equipment For Wheels-Up And Runway Wave-Off Lights 5
Tolerances 5
Wheel-Up Lights Description. 2
Wheels-Watch Shelter. 2

Record of Applicable Technical Directives

None

1. GENERAL INFORMATION.

2. PURPOSE.

This Work Package (WP) contains the requirements for the Wheels-up and Runway Wave-off Lights. These lights consist of two separate light configurations, the wheels-up lights and the runway wave-off lights. The purpose of the wheels-up lights is to illuminate the underside of aircraft on final approach to enable the wheels watch to determine if the aircraft's landing gear is fully lowered. The runway wave-off lights provide a strong visual signal to the pilot by day or night to execute an emergency missed approach. These requirements shall be used for all new wheels-up lights and runway wave-off lights installations.

3. JUSTIFICATION REQUIREMENTS.

The justification for wheels-up lights and runway wave-off lights depends on the types of air operations. Any runway approach that uses a wheels watch to support operations should qualify for runway wave-off lights. If a wheels watch is used during daytime and similar operations occur for that runway at night, wheels-up lights should be justified. Certain types and frequency of air operations may justify the need for one or both systems of lights. Deviations from these requirements will require approval (WP002 00).

4. RELATED FACILITIES.

The functions of wheels-up lights and runway wave-off lights are not directly related to other visual aids.

5. DESCRIPTION.

6. Wheels-Up Lights.

(See figure 1.) The wheels-up lights are a bar of lights located in the approach area for illuminating the underside of aircraft preparing for landing. This light bar consists of 20 white lights in a line perpendicular to the extended runway centerline. The light beams shall project upward and toward the runway threshold. The light bar shall be on the same side of the extended runway centerline as is the air traffic control tower. A dimmer to control the intensity of the lights shall be provided.

7. Runway Wave-Off Lights.

(See figure 2.) The runway wave-off lights consist of six lights, three lights along each side of the runway in the touchdown area. These lights present a high-intensity red flashing signal to inform the pilot approaching for a landing to execute an emergency wave-off or missed approach procedure. The lights are in pairs outboard of the runway edges. The runway wave-off lights shall be activated by either the control tower operators or wheels-up watch. Two types of lights are used. The red capacitance-discharge (strobe) lights are used for new installations and as replacements of existing installations. The three-lamp cluster, flashing, red incandescent lights are obsolete, and replacements, other than for routine maintenance, should use the strobe wave-off lights.

8. WHEELS-WATCH SHELTER.

The wheels-watch shall be provided with a shelter to protect the observer from inclement weather. The shelter shall have a maximum size of 8 feet square and 8 feet high. The upper portion of the shelter shall be transparent with good viewing quality for observing the aircraft's landing gear position. The wheels-watch shelter shall be located near the wheels-watch handhold approximately 205 feet from the extended runway centerline, it should be portable, and may require marking and lighting as an obstruction (WP003 09 and WP003 10).

9. INSTALLATIONS.

10. INSTALLATION REQUIREMENTS.

For installation details for the wheels-up lights and the runway wave-off lights, refer to ~~MIL-HDBK-1023/1 and NAVFAC P-272~~**UFC 3-535-02**. General design and installation requirements are given below.

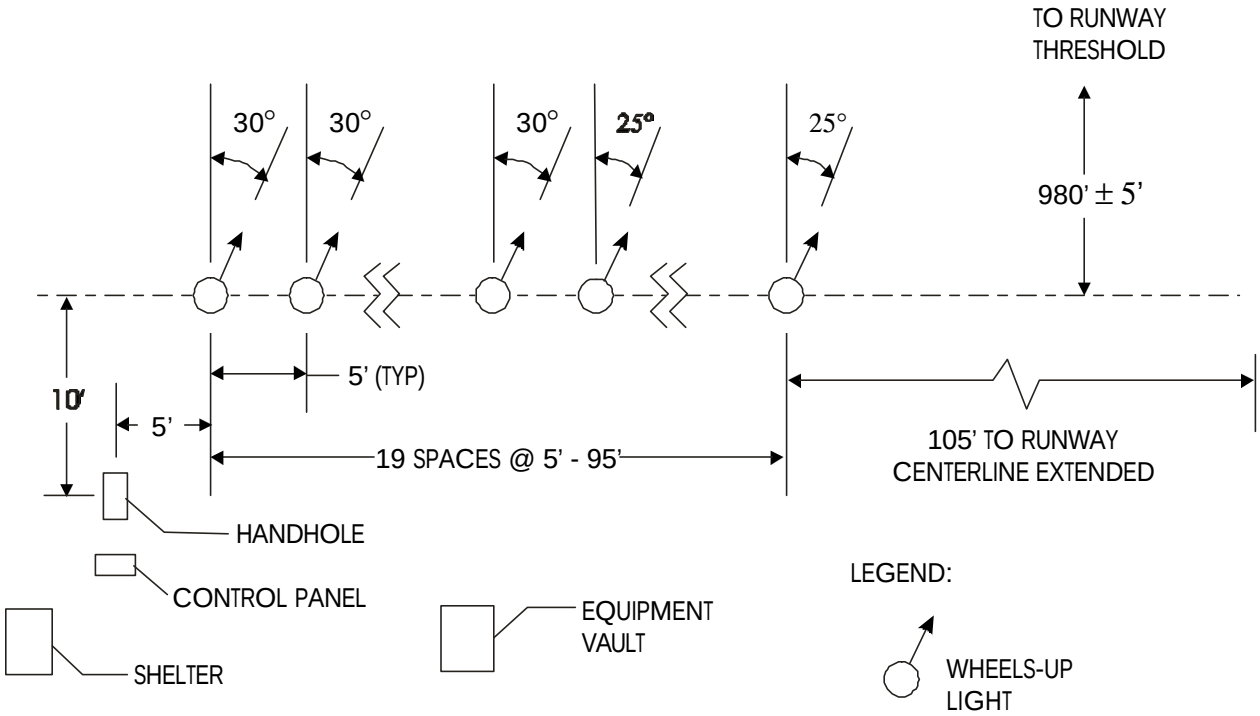

A. PLAN LAYOUT

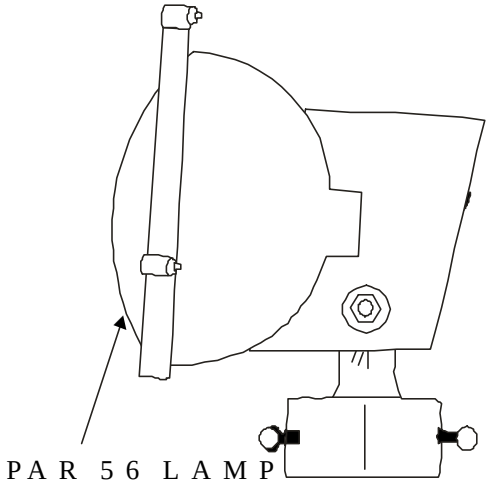

LIGHT: TYPE FAA-E-982, ELEVATED, UNIDIRECTIONAL

LAMP: 500W 120V, TYPE Q50PAR56/MFL

B. WHEELS-UP LIGHT

Figure 1. Typical wheels-up lights

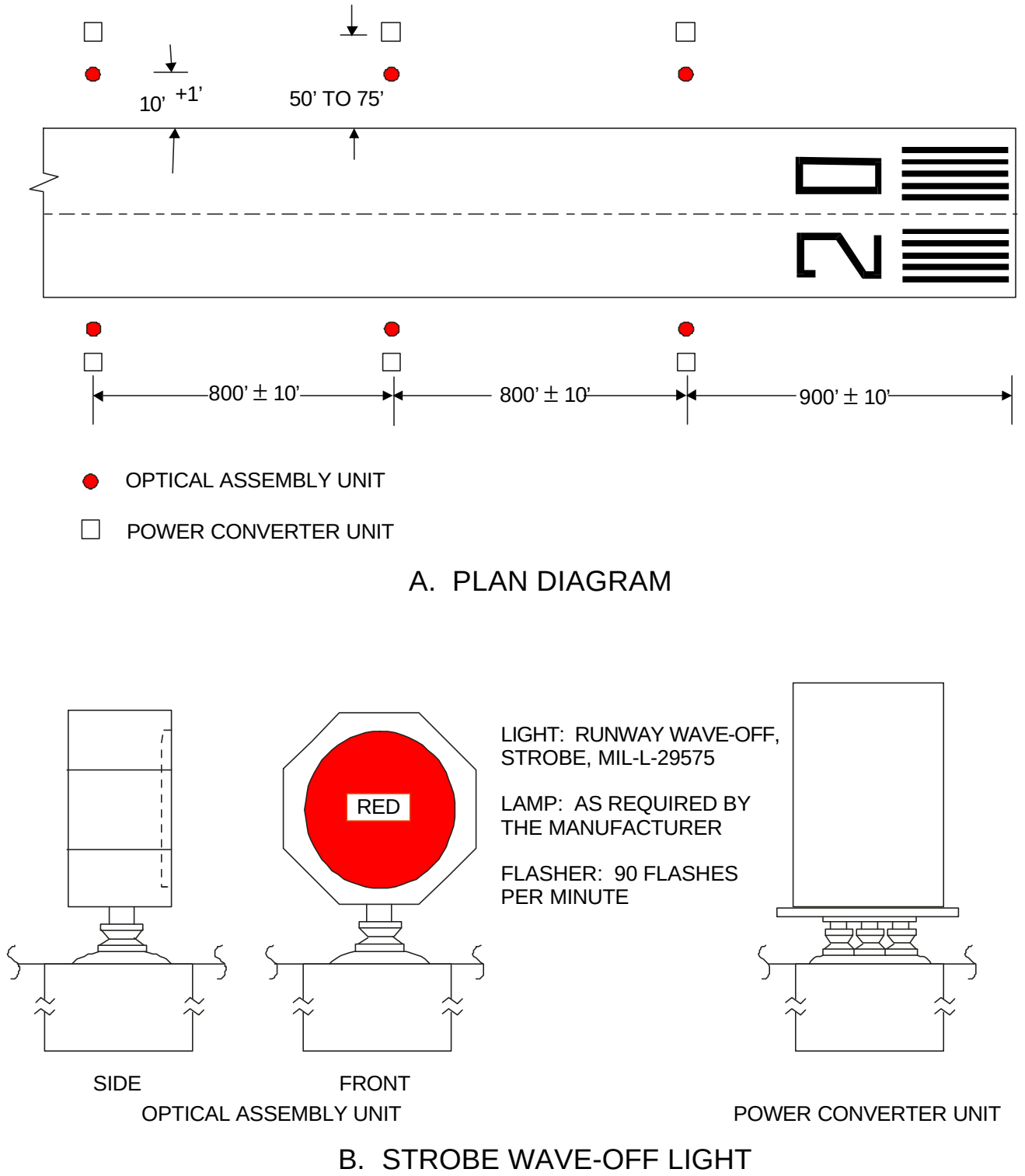

Figure 2. Typical strobe runway wave-off lights

11. METHODS OF INSTALLATION.

Elevated, unidirectional lights are used for both the wheels-up lights and the runway wave-off lights. The power to the wheels-up lights is from 120V multiple circuits. Power to the strobe wave-off lights is from 480V multiple circuits to the power converter units which provides the power to the optical assembly units. The power converter units may be separated up to 150 feet from the optical assembly units. The lights for wheels-up lights and wave-off lights are mounted on frangible couplings. The frangible couplings are installed on conduit elbows for wheels-up lights. For the strobe wave-off lights, the power converters are installed on light bases, and the optical assembly units may be installed on light bases or conduit elbows. Junction boxes for connections may be used at the optical assembly units. The wheels-watch shelter may be placed on a concrete pad or other support.

12. LOCATION AND DIMENSIONS.

Since these sets of lights have few features of locations or dimensions in common, the requirements are discussed separately as follows:

13. Wheels-Up Lights.

The wheels-up lights are located in the approach area on a straight line 980 ±5 feet from the runway threshold as illustrated in figure 1. This line shall be at right angles ±1 degree to the extended runway centerline. The lights shall be spaced at 5-foot intervals with the first light 105 feet from the runway centerline and the twentieth light 200 feet from the centerline. The line of lights should be on the same side of the runway centerline as the air traffic control tower. This line of lights shall be horizontal ±2 inches with the height of the light with the shortest support not more than 26 inches above the ground or paved surface. The beams of these lights shall be directed toward the runway threshold at 30 degrees above horizontal. The horizontal aiming of the three lights nearest the extended runway centerline shall be 25 degrees toward the runway centerline from a line through the light parallel to the runway centerline and 30 degrees for the remaining lights. The tolerance for the aiming shall be ±1 degree. The wheels-watch handhole shall be located 5 feet outboard of the last light.

14. Runway Wave-Off Lights.

The runway wave-off lights are located along both edges of the runway in the touchdown area. Each pair of lights shall be on a line at right angles ±1 degree to the runway centerline as illustrated in figure 2. The three pairs of lights shall be 900, 1700, and 2500 feet from the runway threshold. A pair of lights may be moved the least practical distance up to 100 feet to provide clearance for runway and taxiway intersections, facilities such as arresting gear and OLS, and major construction problems. Along each side of the runway the lights shall be on straight line parallel to the runway centerline and not less than 10 feet outside the runway edges. The beams of these lights shall be directed toward the approach zone. The maximum height of the optical assembly unit shall be not more than 20 inches above the adjacent runway edge. The power converter

TABLE 1. SCHEDULE OF LIGHTING EQUIPMENT FOR WHEELS-UP AND RUNWAY WAVE-OFF LIGHTS

Purpose and Type of Fixture	Lamp Rating and Type	Isolation Transformer	
		Rating	Type
Wheels-up Lights[1/]			
FAA-E-982	500W 120V type Q500-PAR56/MFL	2400/120-240V, 15KVA (One for all 20 lights)	Commercial, subway type
Runway Wave-off Lights[1,2/]			
MIL-L-29575	As required by manufacturer.	Power converter unit.	As required by manufacturer.

[1/] 20 wheels-up lights and 6 runway wave-off lights are required.

[2/] A signal flasher to flash all the wave-off lights simultaneously at 90 flashes per minute is required.

~~[3/] Existing installations may use type 500PAR64/NSP lamps and MIL-T-23682, 2400/180V transformers.~~

units are usually located 50 to 75 feet from the runway in line with the optical assembly units preferably in a line parallel with the runway centerline. Each wave-off strobe light shall be aimed vertically four degrees above the horizontal and two degrees toward the runway. An underground wave-off equipment vault shall be provided if an OLS vault is not available.

15. EQUIPMENT.

The lighting equipment for the wheels-up lights and the runway wave-off lights shall be as shown in table 1. The wheels-up lights require 20 lights of the type shown in figure 1B. The runway wave-off lights require 6 lights of the type shown in figure 2B arranged in three pairs. The wave-off lights require red filters. All lights shall have frangible couplings.

16. PHOTOMETRIC REQUIREMENTS.

The color of the lights shall be aviation white for the wheels-up lights and aviation red for the wave-off lights in accordance with ICAO, Annex 14, Vol. 1, App. 1 as modified in MIL-L-29575. Each of the wheels-up lights shall have a peak intensity at rated voltage of not less than 43,000 candelas and at 21,000 candelas shall have a beamspread of not less than 26 degrees horizontally and 10 degrees vertically. These lights shall be provided with not less than three steps of intensity control and the intensity at the lowest setting shall be not more than 10 percent of the intensity at rated voltage. The strobe wave-off lights shall have a peak effective intensity of not less than 50,000 candelas in red, and at 25,000 candelas effective intensity the beamspread shall be not less than 10 degrees horizontally and 8 degrees vertically. The wave-off lights shall be provided with two intensity steps with the lower step at approximately 10 percent of the intensity at rated voltage.

17. POWER AND CONTROLS.

18. POWER.

Power for the wheels-up lights and the runway wave-off lights shall be provided by multiple circuits (WP009 00). A single 15KVA 2400/120-240V, subway (submersible) type distribution transformer may supply the power for the wheels-up lights. This transformer may be located in an underground vault near these lights, or in a housing above ground if it will be more than 200 feet from the extended runway centerline and is not a flight clearance obstruction. Power for the strobe wave-off lights may be provided by a single 10KVA 2400/480V, subway (submersible) type transformer, probably located in a manhole or underground vault. The wheels-up and runway wave-off lights do not require emergency power, but if such power is available it should be used.

19. CONTROLS.

The wheels-up lights shall be controlled manually from the wheels-watch control panel only. This control panel shall include a dimmer control which can vary the light intensity in not less than three steps with the intensity of the lowest setting not more than 10 percent of rated intensity. The wave-off lights shall be controlled manually using momentary-contact type switches. The switches shall be located only at the following stations:

a. Air traffic control tower,

b. Airfield lighting vault, or

c. Wheels-watch stations.

The wave-off lights shall be automatically flashed between 80 and 100 flashes per minute. The flash duration for the strobe lights should not be longer than 50 milliseconds.

TECHNICAL MANUAL

SIMULATED AIRCRAFT CARRIER DECK LIGHTS AND MARKINGS

SHOREBASED AIRFIELDS

Reference Material

~~Paint, Traffic and Airfield Marking, Solvent Base ..... FED-TT-P-85~~
~~Paint, Traffic, Black ..... FED-TT-P-110~~
Introduction 002 00
~~Definitive Designs for Naval Shore Facilities ..... NAVFAC P-272~~
Optical Landing Aids (OLA) 003 13
Runway Markings 004 01
Runway Threshold Lights 004 02
Runway End Lights 004 04
High-Intensity Runway Edge Lights (HIRL) 004 05
Runway Centerline Lights 004 06
Touchdown Zone Lights (TDZL) 004 07
Runway Distance Markers (RDM) 004 09
Arresting Gear Markers and Markings 004 10
Colors FED-STD-595
Wheels-up and Wave-off Lights 006 03
Constant-Current Regulators 009 02
Isolation and Distribution Transformers 009 03
Design Drawings for Visual Air Navigation Facilities ..... UFC 3-535-02
~~Airfield Lighting ..... MIL-HDBK-1023/1~~
Paint, Traffic and Airfield Marking, Water Emulsion Base ..... FED TT-P-1952
Aeronautical Ground Light and Surface Marking Colors ..... ICAO, Annex 14, Vol. 1, App. 1
Isolation Transformers for Airport Lighting Systems ..... FAA AC 150/5345-47
Standards for Specifying Construction of Airports ..... FAA AC 150/5370-10

Alphabetical Index

Subject **Page No.**

Borders 2
Controls 7
Description 2
Dimensions 6
Equipment 7
Existing Installations 2
Fixtures 7
General Information. 2
Installation Requirements 6
Installations 6
Intensity Control 7
Justification Requirements. 2
Lights. 6
Location And Dimensions 6
Markings. 2

Photometric Requirements. 7
Power. 7
Power And Controls 7
Purpose. 2
Related Facilities 2
Schedule Of Equipment And Materials For Simulated Deck Lights And Markings 8

Record of Applicable Technical Directives

None

1. GENERAL INFORMATION.

2. PURPOSE.

This Work Package (WP) contains the requirements for the lights and markings for simulated aircraft carrier decks. The simulated carrier deck is a standardized, full scale arrangement of lights and markings of the flight deck of an aircraft carrier and is used to train pilots on shore for landing aircraft. The lights are used for training at night and the markings for training during daylight in Visual Flight Rules (VFR) and in some Instrument Flight Rules (IFR) conditions (WP002 00). However, training operations should not be attempted in Category II and Category III IFR conditions. These requirements shall be used for all new installations. Existing installations may be used and maintained until upgrading or major replacements are required.

3. JUSTIFICATION REQUIREMENTS.

If aircraft carrier training is part of the airfield's mission, the simulated carrier decks shall be installed. If the training is to be in daylight only in VFR conditions, only the markings are required. If the training includes night operations or in IFR conditions, both lights and markings shall be installed. Variations from these requirements shall be approved in accordance with the procedures of WP002 00.

4. RELATED FACILITIES.

The use of the simulated aircraft carrier deck lights and markings require the use of an optical landing aid, either a Fresnel Lens Optical Landing System (FLOLS), Improved Fresnel Lens Optical Landing System (IFLOS)~~ (scheduled for installation starting in the year 2000)~~, or a Manually Operated Visual Landing Aid System (MOVLAS) (WP003 13)~~ and with wave-off lights (WP006 03)~~. The installation and operation of the simulated carrier deck will affect the installation or operation of the following runway visual aids:

a. Runway markings (WP004 01). The simulated deck markings shall supersede the runway markings and runway markings shall not be installed between the carrier deck edge markings.

b. Runway markings for Category I. When a simulated carrier deck is installed on a parallel CAT I runway, the runway designation marking dimensions must be shortened in accordance with figures 1 and 2 (reference WP004 01), and the left side, first set, of touchdown markings must be omitted. Also, the left fixed distance marking can overlap the carrier deck.

c. Arresting gear. If an arresting gear location overlies an FCLP simulated carrier box landing area, or is within 100' of either end, the pendant should be removed from the runway during FCLP operations in order to avoid an in-flight arrestment and to prevent off center landings which could knock A/G motors out of battery. Reinstall the pendant and restore the A/G to battery position at the completion of FCLP operations.

d. Runway centerline lights (WP004 06) and touchdown zone lights (WP004 07). Simulated carrier decks ~~should~~ **shall** not be installed on runways equipped with centerline or touchdown zone lights~~ if other locations are available~~.

5. DESCRIPTION.

6. The simulated carrier deck lights and markings are standardized installations representing the visual aids for aircraft carrier landing decks. The markings may be installed without the lights for daytime only operations.

7. MARKINGS.

The markings shall be painted on the runway surface. If the contrast of the markings against the pavement is poor, the markings may be outlined with a lusterless black border. The markings shall consist of centerline markings, edge markings, and ramp athwartship markings (see figure 3). There is no athwartship line at the forward end of the deck.

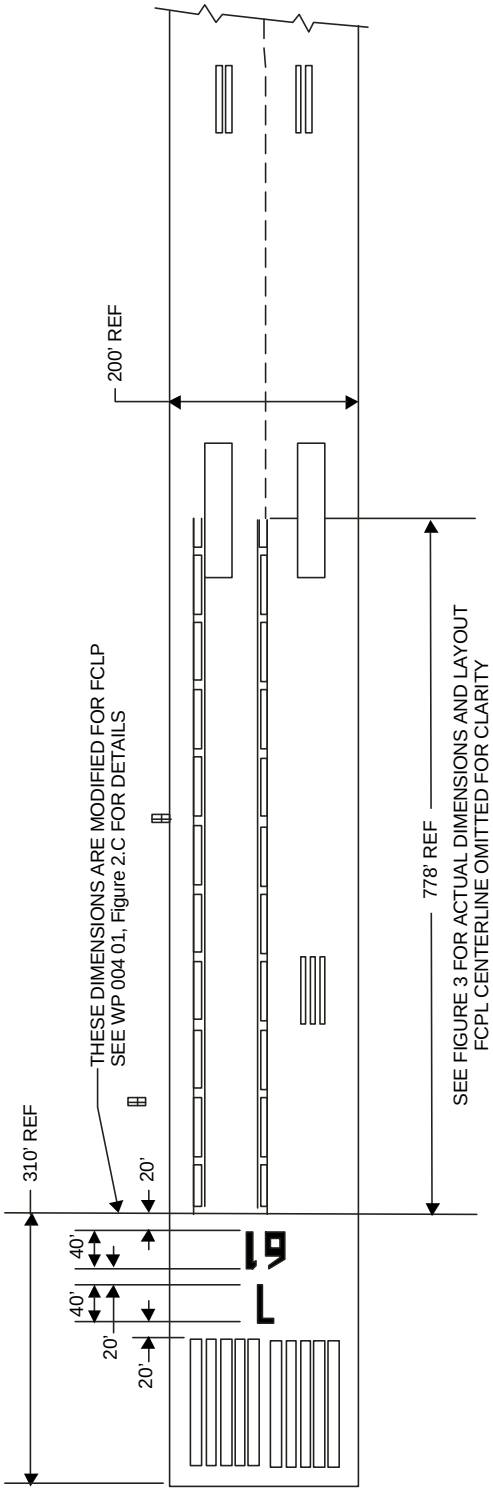

Figure 1. Simulated carrier deck configuration for a 200’ wide CAT I parallel runway

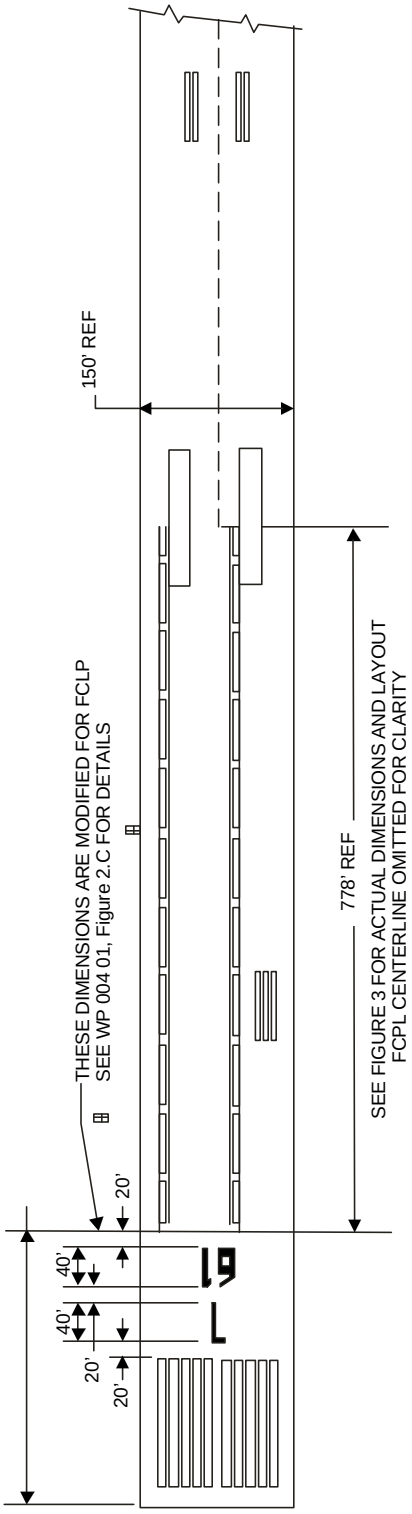

Figure 2. Simulated carrier deck configuration for a 150’ wide CAT I parallel runway

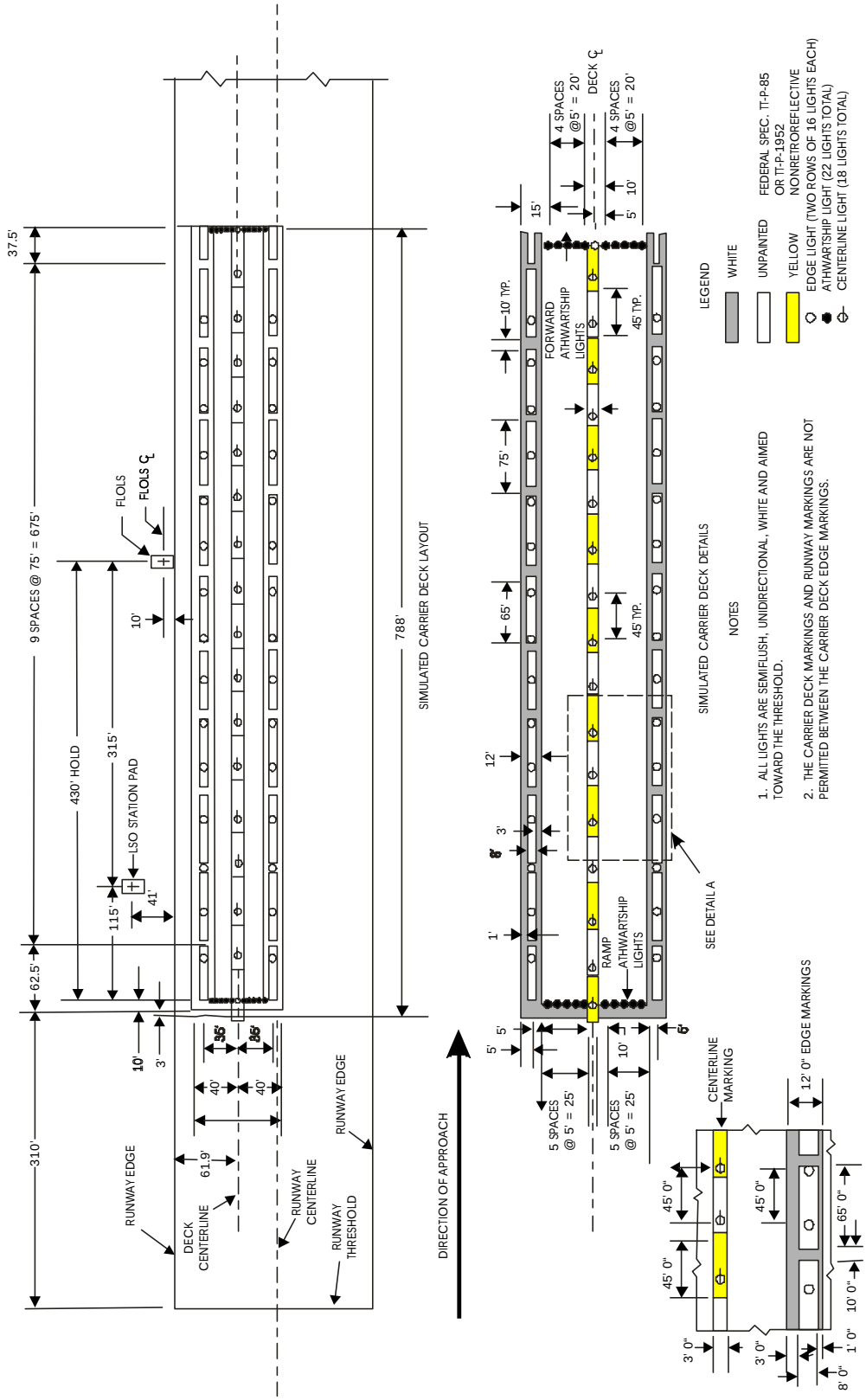

Figure 3. Typical configuration for simulated aircraft carrier deck lights and markings

8. LIGHTS.

The deck fixtures shall be semiflush, unidirectional, lights emitting white light. These lights shall be a hook-impact-resistant type. The configuration (see figure 3) shall consist of a row of centerline lights, a row of edge lights on each side of the deck, a row of ramp athwartship lights across the deck end nearer the runway threshold, and a row of forward athwartship lights across the other end of the deck. There shall be 18 centerline lights between the lines of athwartship lights, 16 edge lights in each line, 12 ramp athwartship lights, and 10 forward athwartship lights. The forward shape of the deck if formed by omitting two forward athwartship lights and two edge lights on each side.

9. INSTALLATIONS.

10. INSTALLATION REQUIREMENTS.

For installation details for the simulated deck ~~markings refer to FAA AC 150/5370-10 and for deck~~ lights refer to ~~MIL-HDBK-1023/1 and NAVFAC P-272~~**UFC 3-535-02**. General design and installation requirements are given below. The configurations for markings and lights are shown in figure 3.

11. LOCATION AND DIMENSIONS.

The location of the simulated aircraft carrier deck shall be coordinated with the Optical Landing System (OLS) for this runway approach. Usually the OLS mirror or face of the lenses are located 750 feet from the runway threshold. The deck centerline shall be parallel to the runway centerline and 61 feet 9 inches from the left edge of the runway as viewed from the approach. The deck lights and markings shall be symmetrical about the deck centerline. The line for the ramp athwartship lights shall be 430 feet towards the runway threshold from the point where a line through the face of the OLS perpendicular to the deck centerline intersects this centerline. The length of the simulated deck between the line of ramp and forward athwartship lights shall be 765 feet. The lines of deck edge lights shall be 35 feet from the deck centerline on each side or 70 feet wide. The deck lights are enclosed by a rectangle 70 feet wide by 765 feet long.

12. Markings.

The markings shall be painted on the runway pavement surface. The markings shall be nonretroreflective white except for the sections of the centerline markings which are nonretroreflective yellow. The ramp athwartship marking is a 10-foot wide white stripe across the ramp end of the deck located on the runway threshold side of the line of ramp athwartship lights. This marking shall be perpendicular to and extend 40 feet each side of the deck centerline. The ramp athwartship marking shall be interrupted at the deck centerline by a yellow section of the deck centerline marking. The deck centerline markings shall consist of a 3-foot wide stripe symmetrical about the deck centerline with alternating yellow and white sections. The sections shall be 45 feet long beginning with a yellow section starting 13 feet towards the runway threshold from the line of ramp athwartship lights. The last section shall be white and 13 feet long ending in line with the line of forward athwartship lights. The deck edge markings shall be two white stripes on each side parallel to the deck centerline and extending from the edge of the ramp athwartship marking to the line of the forward athwartship lights. The outer edge stripes shall be one-foot wide with the outer edge 40 feet from the deck centerline. The inner edge stripes shall be 3 feet wide with the inner edges 28 feet from the deck centerline. The two edge stripes shall be connected at 75-foot intervals by 10-foot wide white bars. The edge of the bars nearest the ramp shall be 47.5 feet from the line of ramp athwartship lights and the edge of the last bars shall be 32.5 feet from the line of forward athwartship lights. The deck markings will be enclosed by a rectangle 80 feet wide and 775 feet long plus the 3-foot length at the beginning of the centerline marking. If borders are used to increase contrast, the borders shall be 6 to 12 inches wide of black lusterless paint outlining the deck markings. Regulations of some states, such as California, or other authorities may prohibit or restrict the use of solvent base paints. For white and yellow markings, ~~this may require using~~**use** type TT-P-1952 ~~instead of type TT-P-85~~ paint. ~~The~~ **For** black**,** ~~type TT-P-110 paint may not be acceptable, but any~~**use** long-wearing semigloss or flat black paint, such as type TT-P-1952 with black pigment, suitable for the surface ~~may~~ **should** be ~~substituted~~**used**.

13. Lights.

The deck lights usually are direct-mounted in holes drilled in the pavement and the cables will be placed in saw kerfs cut in the pavement. If the deck lights are installed in a new runway, the lights may be based mounted. The axes of the beams of these unidirectional lights shall be aligned parallel to the deck centerline and directed toward the runway threshold. Typically, the centerline and edge lights shall be uniformly spaced at 45 feet between the line of ramp and forward athwartship lights. The edge lights do not have the two lights in each row at the forward end to simulate the forward end of the flight deck. The deck edge lights shall be in two rows 35 feet from and parallel to the

centerline. The deck edge lights shall be located in such a manner that a line perpendicular to the deck centerline and passing through a centerline light shall also pass through the deck edge lights (port and starboard) so that a rectangular, symmetrical pattern results. The ramp and forward athwartship lights shall be spaced uniformly on 5-foot centers on each side of the centerline lights. There will be 6 lights on each side of the centerline for the ramp athwartship lights and 5 lights on each side for the forward athwartship lights. If one light in a set of three (two edge lights and a centerline light) must be relocated longitudinally for any reason, such as a pavement joint, the other two lights shall be relocated accordingly. Usually these lights in groups of three or four are connected to an isolation transformer located at the nearer edge of the runway. If the lights are base-mounted, individual transformers for each light may be placed in the base.

14. EQUIPMENT.

15. FIXTURES.

The fixtures for the deck lights shall be unidirectional, semiflush, white lights which are hook-impact-resistant. These lights are listed in table 1 and typical fixtures are shown in figure 4. The fixtures may be bidirectional with one beam blanked out. The marking materials shall be paints of the types listed in table 1.

16. PHOTOMETRIC REQUIREMENTS.

The simulated aircraft carrier deck lights all have similar photometric requirements. The minimum average intensity on the axis of the beam at rated current shall be not less than 300 candelas for a horizontal beamspread of ±10 degrees in azimuth and 0 to +07 degrees in elevations. The color of the emitted light shall be aviation white in accordance with ICAO, Annex 14, Vol. 1, App. 1. These lights shall be provided with not less than three intensity settings with the lowest setting not more than 10 percent of rated intensity. The colors of the markings shall be in accordance with FED-STD-595 as follows:

a. White, color chip No. 27875,

b. Yellow, color chip No. 23538,

c. Black, color chip No. 27038.

17. POWER AND CONTROLS.

18. POWER.

The power for the simulated carrier deck lights shall be provided ~~by three circuits~~ with a 4KW, 5-intensity step, 6.6A output constant-current regulator (WP009 02) ~~for each circuit~~. ~~One circuit is for the ramp and forward athwartship lights, one for the deck centerline lights, and the other for the deck edge lights.~~ The fixtures should be connected to the primary series circuit by individual 30/45W, 6.6/6.6A isolation transformers for base-mounted lights or by three or four fixtures in series to 200W, 6.6/6.6A isolation transformers (WP009 03) for direct-mounted fixtures. For groups of fixtures connected to a single isolation transformer, the individual fixtures shall be equipped with shorting devices to short circuit an inoperative lamp. This prevents all lights of the group from being out when any lamp in the group fails. Emergency power is not required but should be provided if available.

19. CONTROLS.

The simulated aircraft carrier deck lights shall be controlled by the Landing Signal Officer (LSO) along with the associated OLS (WP03 13). The following runway lights are **recommended** to be remote-controlled at the LSO work station for direct control by the LSO:

a. Runway edge lights (WP004 05),

b. Runway threshold lights (WP004 02),

c. Runway end lights (WP004 04),

d. Runway distance markers (WP004 09),

e. Arresting gear markers (WP004 10),

~~Separate intensity controls for the centerline, athwartship, and edge lights shall be provided, see paragraph 18 POWER above.~~**When operating a simulated carrier deck only those lights shall be active. The LSO will activate the normal runway lights when required.**

NOTE: Check with the LSO School for possible additional requirements such as radios, etc.

TABLE 1. SCHEDULE OF EQUIPMENT AND MATERIALS FOR SIMULATED DECK LIGHTS AND MARKINGS

Purpose and Type of Fixture or Material	Lamp Rating and Type	Isolation Transformer	
		Rating	FAA Type AC150/5345-47
Deck lights, semiflush, unidirectional, white, hook-impact-resistant, 72.			
Direct mounted Class L-852 Navy, Type VI[1/]	45W 6.6A, as determined by manufacturer.	200W 6.6/6.6A (3 or 4 lights per transformer)	L-830-6
Base mounted Class L-852 Navy, Type VII or VII	45W 6.6A, type as determined by manufacturer.	30/45W 6.6/6.6A	L-830-1

Marking Materials.

Color of Marking	Federal Specification	Authorized Use
Nonretroreflective White	~~TT-P-85[2/] or~~ TT-P-1952, paint, white	Deck edge, ramp athwartship and part of centerline
Nonretroreflective Yellow	~~TT-P-85[2/] or~~ TT-P-1952 paint, yellow	Part of centerline
Lusterless Black	~~TT-P-110[2/],~~ Paint, black	Border around white or yellow markings

[1/] These lights shall be equipped with a device for shorting inoperative lamps.

~~[2/] Some area authorities may prohibit or restrict the use of this type of paint.~~

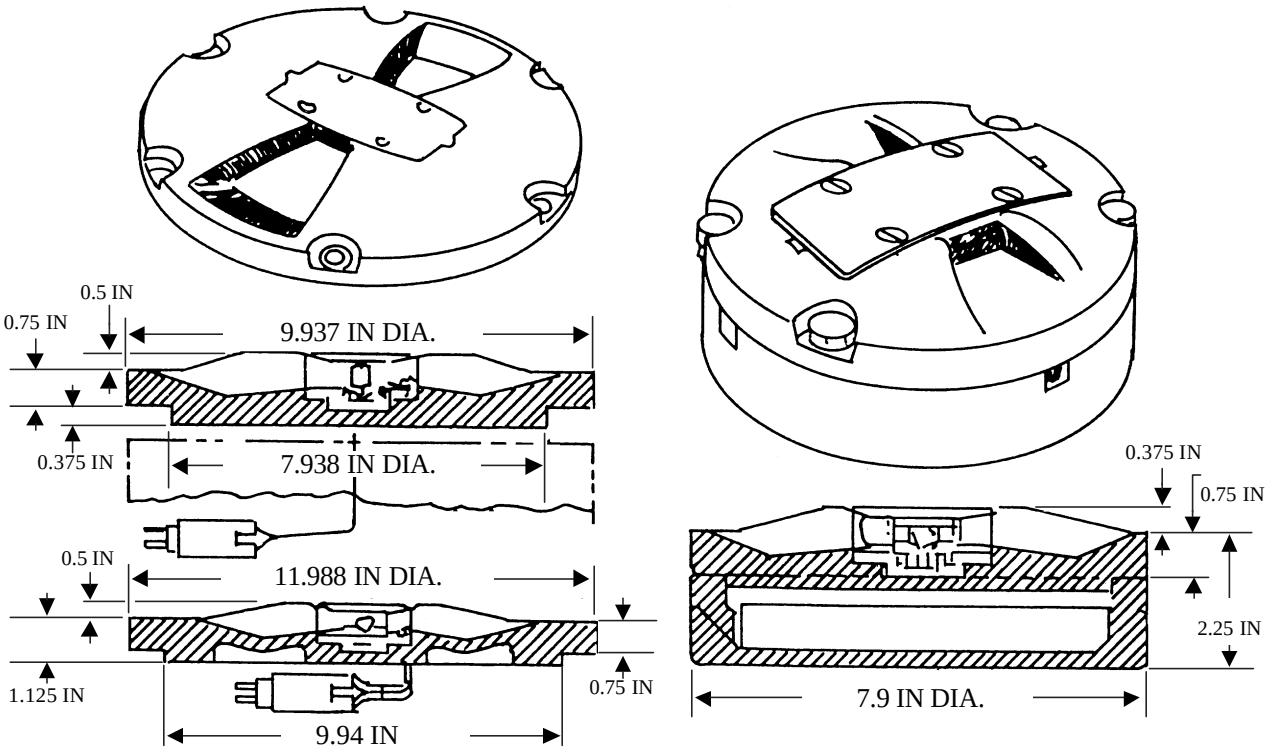

TYPE VIII **TYPE VI**

NOTE: DIMENSIONS ARE FOR REFERENCE ONLY.

LIGHT, BASE-MOUNTED: CLASS L-852
NAVY TYPE VII OR VIII

LIGHT, DIRECT-MOUNTED: CLASS L-852
NAVY TYPE V AND VI, WITH SHORTING DEVICE
FOR FAILED LAMP

LAMP: 45W 6.6A, TYPE AS DETERMINED
BY MANUFACTURER

ISOLATION TRANSFORMER: FOR THREE OR FOUR LIGHTS IN THE SECONDARY OF ONE TRANSFORMER. TRANSFORMER IS 6.6/6.6A 200W FAA AC 150/5345-47 TYPE L-830-6, FOR A TRANSFORMER FOR EACH LIGHT 6.6/6.6A 30/45W FAA AC 150/5345-47 TYPE L-830-1.

Figure 4. Typical arresting-hook-resistant lights for simulated carrier decks, type FAA L-852 (Navy)

TECHNICAL MANUAL

FUELING AREA LIGHTS

SHOREBASED AIRFIELDS

Reference Material

~~Definitive Designs for Naval Shore Facilities ..... NAVFAC P-272~~
Taxiway Markings 005 01
Taxiway Edge Lights 005 02
Taxiway Centerline Markings 005 03
Taxiway Guidance Signs 005 04
Colors FED-STD-595
Apron and Parking Area Lights 006 02
Electrical Power and Control for Visual Aids 009 00
Isolation and Distribution Transformers 009 03
Design Drawings for Visual Air Navigation Facilities ..... UFC 3-535-02
~~Airfield Lighting ..... MIL-HDBK-1023/1~~
Aeronautical Ground Light and Surface Marking Colors ..... ICAO, Annex 14, Vol. 1, App. 1
Lights, Airport, Semiflush, General Specifications MIL-T-26202
Specification for Taxiway and Runway Signs ..... FAA AC 150/5345-44
Specification for Runway and Taxiway Light Fixtures ..... FAA AC 150/5345-46
Isolation Transformers for Airport Lighting ..... FAA AC 150/5345-47

Alphabetical Index

Subject **Page No.**

Aiming 7
Controls 8
Description 2
Directional Guidance Signs 2
Edge Lights 2
Equipment 7
Existing Installations 2
Fixtures. 7
Floodlights 2
Fueling Lane Edge Lights 2
General Information. 2
Guidance Signs 2
Installation Requirements 2
Installations 2
Intensity Control 7
Justification Requirements. 2
Locations. 3
Methods Of Installation. 3
Photometric Requirements. 7
Power. 7
Power And Controls 7
Purpose. 2

Related Facilities..... 2
Schedule Of Equipment For Fueling Area Lights..... 4

Record of Applicable Technical Directives

None

1. GENERAL INFORMATION.

2. PURPOSE.

This Work Package (WP) contains the requirements for the lighting of direct fueling areas at night. These lights outline the fueling lanes, identify and indicate the directions for entering, and illuminate the area. Lighting for other fueling areas are provided by the apron lighting. The markings are the standard taxiway centerline and edge markings (WP005 01). The lights provide visual cues to the pilot when entering the fueling lanes, positioning the aircraft for refueling, provide illumination for the fueling operator, and guidance to exit from the fueling lane to a taxiway or apron. These requirements are to be used for designing new lighting installations. Since the shape, size, and location of the fueling areas vary for each airfield, these requirements may be adapted to fit the particular area. Existing fueling area lights may be used and maintained until upgrading or replacement is required.

3. JUSTIFICATION REQUIREMENTS.

All direct fueling areas that are intended for operations at night shall be equipped with fueling area lights.

4. RELATED FACILITIES.

Other visual aids related to the use of fueling area lights are:

a. Taxiway markings (WP005 01),

b. Taxiway edge lights (WP005 02),

c. Taxiway centerline lights (WP005 03),

d. Taxiway guidance signs (WP005 04),

e. Apron and parking area lights (WP006 02).

5. DESCRIPTION.

6. The fueling area lights consist of lane edge lights, guidance signs, and floodlights, each serving a different function.

7. FUELING LANE EDGE LIGHTS.

These lights shall consist of lines of blue lights located along each edge of the fueling lanes (see figure 1). Elevated light fixtures are used, except where lights are located in a full strength paved area. In this case semiflush light fixtures may be used. The fixtures shall be omnidirectional lights connected to the taxiway light circuit and controlled from the control panel located at each of the fueling stations.

8. DIRECTIONAL GUIDANCE SIGNS.

Each fueling lane shall be provided with one or more guidance signs that identifies the lane and indicates the direction for entry. The signs shall read “FUEL 2→“ or similar wording. Signs shall be used on each side of the approach to the entrance of the fueling lane if that lane can be entered from both directions. The signs shall be informational type taxiway guidance signs with black legends on a yellow background. The face of the sign shall be not less than 24 inches tall with letter height not less than 15 inches. The sign shall be connected to and controlled by the fueling lane light circuits.

9. FLOODLIGHTS.

The floodlights shall provide the illumination for the refueling operation. These floodlights shall be low, post-mounted lights with not less than two on each side of the fueling lane to reduce the effects of shadows. The preferred color of the floodlight is aviation white but other white or yellow light may be acceptable. The lights should not emit any direct illumination above the horizontal.

10. INSTALLATIONS.

11. INSTALLATION REQUIREMENTS.

For installation details of the fueling area lights, refer to ~~MIL-HDBK-1023/1 and NAVFAC P-272~~**UFC 3-535-02**. General design and installation requirements are given below.

12. METHODS OF INSTALLATION.

Elevated lights may be mounted on light bases or on conduits in concrete foundations. All elevated lights shall be mounted on frangible couplings. The height of elevated fuel lane lights shall be not more than 14 inches above the lane edge, except in areas with frequent snow accumulations to depths of 12 inches or more where with approval by Naval Air Systems

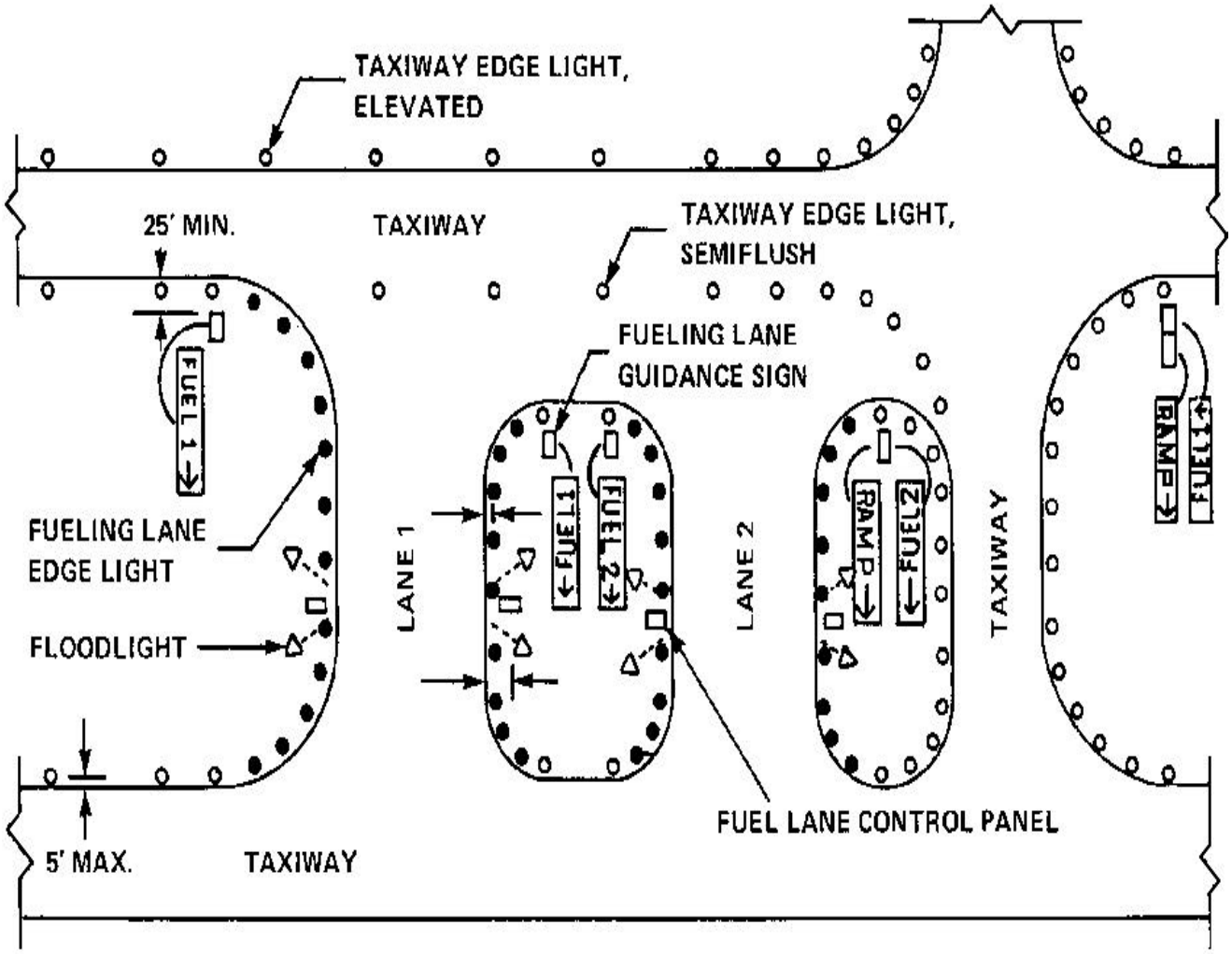

Figure 1. Typical configuration for direct fueling area lights

Command the lights may be raised to not more than 24 inches above the lane edge. Semiflush fuel lane lights shall be installed on light bases. The height of guidance signs shall be not more than 24 inches above the edge of the fueling lane if it is located between 25 and 35 feet from the lane and not more than 30 inches above the fueling lane edge if located 35 or more feet from the fueling lane. The height of the floodlights should be kept to a minimum but shall not exceed 54 above the edge of the fueling lane.

13. LOCATIONS.

The fueling lane edge lights shall be located and equally spaced as for taxiway edge lights (WP005 02) except the spacing of lights between the fueling lane entrance and the stopping position for refueling shall not exceed 50 feet. The preferred location for the edge lights is 2 feet from the lane edge. The fueling lane lights shall extend from but not include the point of tangency (PT) of the fillet with the access and departure taxiways. The fueling lane guidance signs shall be located on each side of the entrance to the fueling lane at the PT of the fillet with the taxiway. The edge of the sign shall be not less than 25 feet from the edge of the taxiway. The face of the sign shall be perpendicular to the taxiway centerline. Two or more floodlights shall be located on each side of each fueling lane. These lights shall be located not less than 15 feet from fueling lane edge and shall be spaced

TABLE 1. SCHEDULE OF EQUIPMENT FOR FUELING AREA LIGHTS

Purpose Type of Fixture	Lamp Rating and Type	Isolation Transformer[1/] Rating	Isolation Transformer[1/] FAA Type AC150/5345-47
Fueling lane edge lights, elevated.[1/]			
FAA AC 150/ 5345-46, type L-861T, Mode 1	45W 6.6A,[2/] type as determined by manufacturer.	30/45W 6.6/6.6A	L-830-1
Fueling lane edge lights, semiflush.[1/]			
FAA AC 150/ 5345-46, type L-852E, mode 1, with blue filter, preferred.	6.6A, watts and type as determined by manufacturer.	100W 6.6/6.6A	L-830-4
Guidance signs.[1/]			
FAA AC 150/ 5345-44, type L-858Y, size 2, 3, or 5, legends as specified.	6.6A, watts, type, and number as determined by manufacturer.	6.6/6.6A. Watts and number as determined by manufacturer.	Type as required by the watts.
Floodlights, low level, post-mounted, 4 each lane.			
To be determined.	As required.	As required.	As required.

[1/] Number of lights required varies with the fueling lane length and spacing.

[2/] 45W lamps are used for systems with intensity control. If intensity control is not used for the taxiway lights, use 30W lamps.

on each side of the fueling point approximately 40 to 50 feet apart to provide uniform illumination from all sides and to reduce shadows.

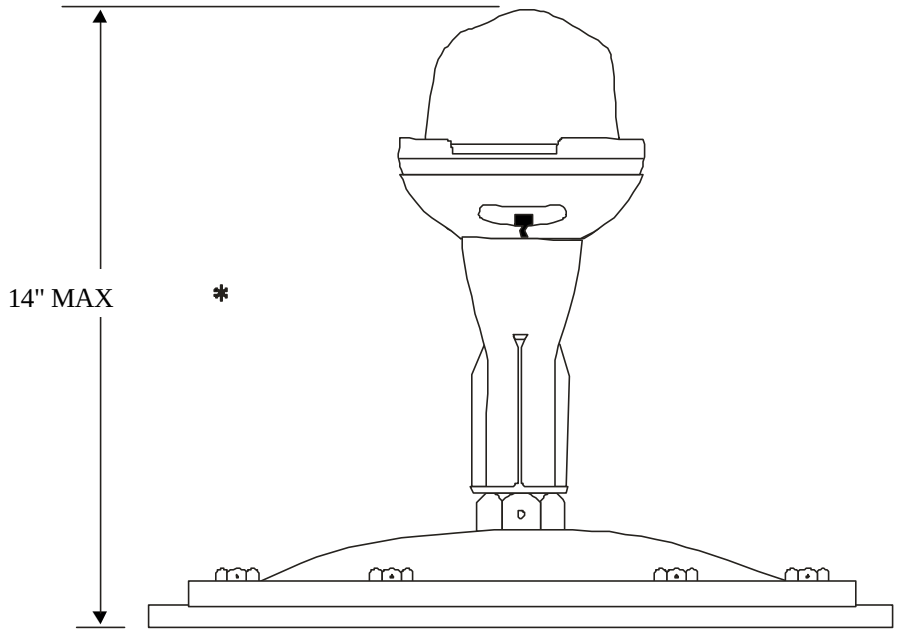

DIMENSIONS ARE FOR REFERENCE ONLY

LIGHT: ELEVATED, 45W 6.6A, FAA AC 150/5345-46, TYPE L-861T, BLUE

LAMP: 45W, 6.6A, TYPE AS DETERMINED BY MANUFACTURER

GLOBE: BLUE

ISOLATION TRANSFORMER: 30/45W 6.6/6.6A,
FAA AC 150/5345-47, TYPE L-830-1

MOUNTED ON FRANGIBLE COUPLING, MAY BE EITHER ON LIGHT BASE OR CONDUIT.

Figure 2. Typical elevated fueling lane edge lights, FAA L-861T

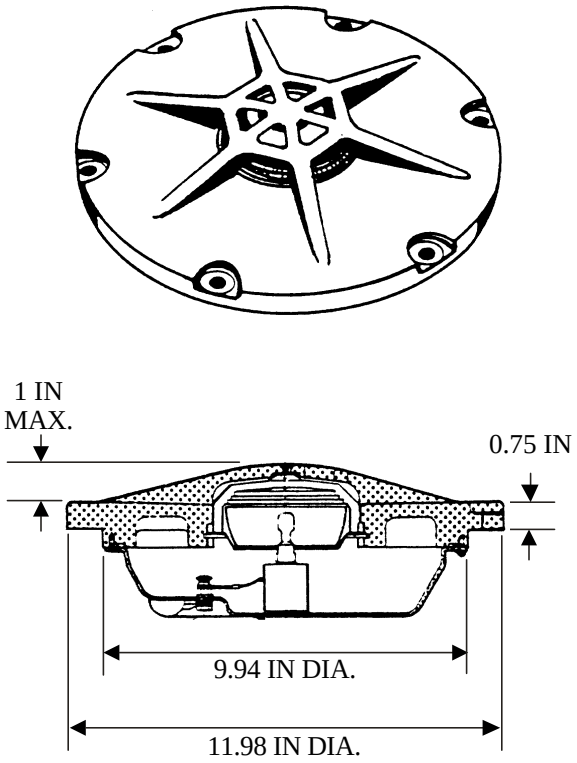

FAA TYPE L-852E

DIMENSIONS ARE FOR REFERENCE ONLY

FIXTURE: FAA AC 150/5345-46,
TYPE L-852E, MODE 1, 45W 6.6A.

LAMP: 45W, 6.6A, TYPE AS REQUIRED
BY THE MANUFACTURER.

FILTER: AVIATION BLUE.

ISOLATION TRANSFORMER: 30/45W 6.6/6.6A,
FAA AC 150/5345-47, TYPE L-830-1

Figure 3. Typical semiflush fueling lane edge lights, type FAA L-852E

SIGNS: INFORMATIONAL, FAA AC 150/5345-44, TYPE L858Y, SIZE 2, 3, OR 5, STYLE 2 OR 3, LEGEND AS SPECIFIED

LAMPS: RATING AND TYPE AS DETERMINED BY MANUFACTURER.

ISOLATION TRANSFORMERS: 6.6/6.6A, WATTS AND NUMBER AS DETERMINED BY MANUFACTURER.

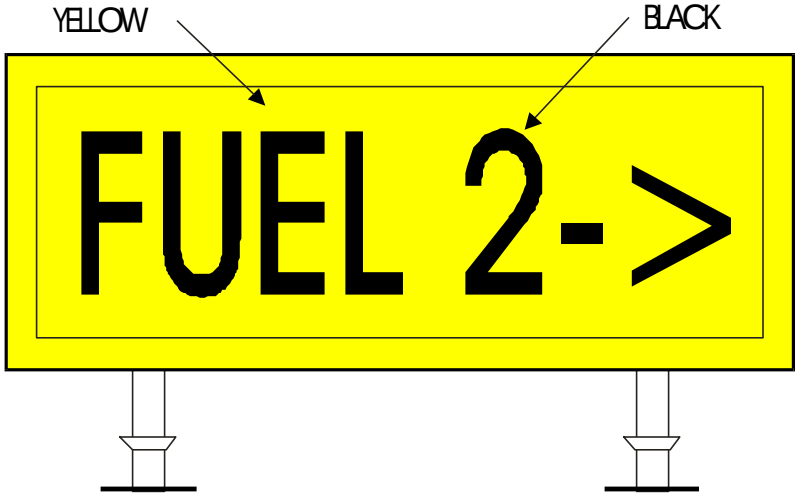
YELLOW
BLACK
FUEL 2->
FUEL 2->
FUEL 2->

to the primary series circuit by individual series-series isolation transformers (WP009 03). The power for the floodlights shall be as required by the type of light fixtures installed.

20. CONTROLS.

The fueling area lights shall be controlled from the fueling area control panels. The intensity for the fueling lane edge lights shall be provided by the taxiway light circuit to which they are connected. The sections of circuits for the fueling lane edge lights and guidance signs shall be unlighted when the fueling area lights are not energized. The control of the floodlights should be independent of the taxiway light circuit.

TECHNICAL MANUAL

PORTABLE EMERGENCY AIRFIELD LIGHTS

SHOREBASED AIRFIELDS

Reference Material

~~Batteries, Dry.....MIL-B-18~~
Runway Markings 004 01
Runway Threshold Lights 004 02
Runway End Lights..... 004 04
High-Intensity Runway Edge Lights (HIRL) 004 05
Taxiway Markings..... 005 01
Taxiway Edge Lights 005 02
~~Airfield Lighting.....MIL-HDBK-1023/1~~
Light, Marker, Portable, Emergency, Airfield, Battery Operated.....MIL-L-19661
Aeronautical Ground Light and Surface Marking Colors.....ICAO, Annex 14, Vol. 1, App. 1
Specification for Portable Runway Lights..... FAA AC 150/5345-50

Alphabetical Index

Subject **Page No.**

Alignment 3
Controls..... 4
Description..... 2
Equipment..... 3
Fixtures..... 3
General Information..... 2
Installation Requirements..... 2
Installations..... 2
Justification Requirements..... 2
Location..... 2
Methods Of Installation..... 2
Photometric Requirements..... 3
Power And Controls..... 4
Purpose..... 2
Related Facilities..... 2
Schedule Of Lighting Equipment For Emergency Lights..... 4

Record of Applicable Technical Directives

None

1. GENERAL INFORMATION.

2. PURPOSE.

This Work Package (WP) contains the requirements for portable emergency airfield lights. These lights are temporary replacements for runway and taxiway lights when the permanent light systems have been destroyed or damaged. The lights are to be used at night for emergency type operations in Visual Flight Rules (VFR) conditions. These lights shall provide visual cues to pilots similar to those of runway edge and threshold/end lights and of taxiway edge lights except

the intensities are lower and the spacing of lights greater.

3. JUSTIFICATION REQUIREMENTS.

Portable emergency lights are required only for those airfields which have a definite commitment to operations at night despite enemy action, natural disasters, or failures of power and lighting equipment. The support for outlying or auxiliary airfields or for civilian areas may be a factor to consider in justification for procuring and storing portable emergency airfield lights.

4. RELATED FACILITIES.

Portable emergency airfield lights are a temporary replacement for permanent runway and taxiway light systems. Although the emergency lights are limited in capability, they provide visual functions similar to the following permanent airfield lights:

a. Runway edge lights (WP004 05),

b. Runway threshold lights (WP004 02),

c. Runway end lights (WP004 04),

d. Taxiway edge lights (WP005 02),

Providing related visual functions for daytime and possibly to some extent at night are:

a. Runway markings (WP004 01),

b. Taxiway markings (WP005 01).

5. DESCRIPTION.

6. The portable emergency lights are complete units when equipped with batteries and do not require external wiring or power sources. These lights are usually omnidirectional but may be bidirectional or unidirectional. If unidirectional lights are used, the number of lights required may be doubled or the lights shall be realigned if the direction of operations changes. The runway edge lights emit white light but colored filters may be fitted over the lamps to obtain green for threshold lights, red for runway end lights, green/red for combined threshold/runway end lights, or blue for taxiway edge lights. The lights shall be provided with anchors or attachments for anchors to resist jet or propeller blast. The lights shall be capable of routine storage for long periods of time, easily transportable by aircraft or military vehicles, and quickly and easily installed and removed. The lights should be steady-burning for air operations. A complete set should include the required number of runway edge and threshold/end lights for the longest runway not to exceed 10,000 feet in length. The set may include emergency lights for the principle taxiways; however, “Follow me” vehicles may be used instead of taxiway lights.

7. INSTALLATIONS.

8. INSTALLATION REQUIREMENTS.

~~For details of installing portable emergency lights, refer to MIL-HDBK-1023/1.~~ General design and installation requirements are given below.

9. METHODS OF INSTALLATION.

Each light shall be placed on a flat level surface, usually on the ground or pavement. The threshold and runway end lights shall be aligned for the green beams to be directed at the approach and the red beams along the runway parallel to the runway centerline. The lights should be anchored in place to prevent being upset or moved about by jet or propeller blast.

10. LOCATION.

The portable emergency lights shall be located in rows along the edges of the runways and taxiways and across the ends of the runways as shown in figure 1 as follows:

a. Runway edge lights. These lights shall be located in rows on each side at or near the runway edges. The rows shall be not more than 10 feet from the runway edges. The spacing shall be not more than 300-foot intervals.

b. Threshold and runway end lights. These lights shall be along a line at each end perpendicular to the runway centerline. This line shall be not more than 5 feet from the runway ends. The lights at each end shall be in two equal groups one on each side of the runway with not less than four lights in each group. The two outermost lights shall be in line with the lines of runway edge lights and the

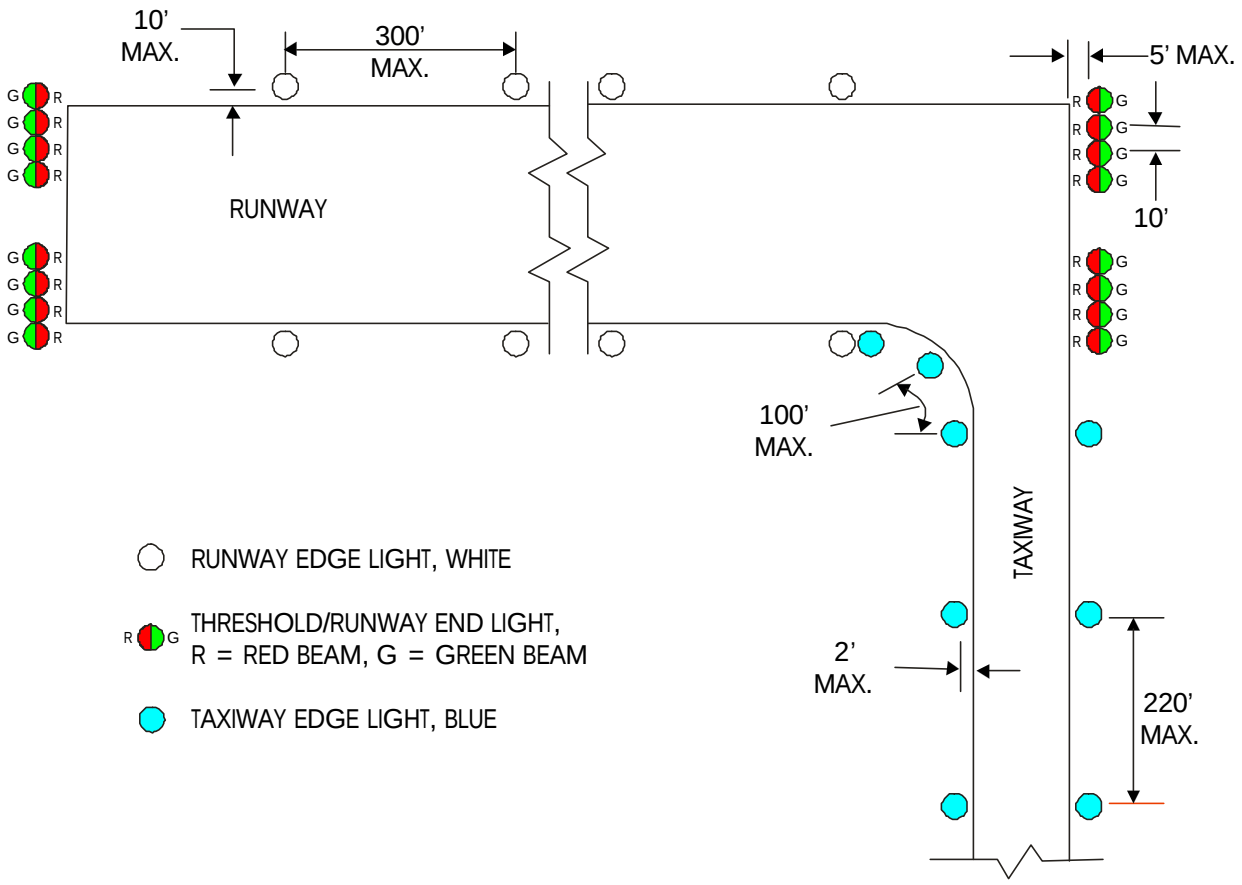

Figure 1. Typical configuration for portable emergency lights

lights are spaced at 10-foot intervals toward the runway centerline.

c. Taxiway edge lights. These lights shall be located in rows along each side of the taxiway not more than 2 feet from the taxiway edges. The lights shall be equally spaced at intervals not to exceed 220 feet, except where the edges are curved. Then the spacing shall not exceed 100 feet. For straight sections of taxiway with parallel edges, the lights shall be located in pairs on a line approximately perpendicular to the taxiway centerline. The spacing at the ends of a section may be less than the spacing interval.

~~b.~~**d.** Alignment. Omnidirectional lights do not require horizontal alignment but should be approximately level. Bidirectional lights shall be aligned in azimuth with the beams parallel to the centerline of the runway or taxiway. Unidirectional lights shall be aligned in azimuth toward the approach direction parallel to the runway centerline or have two lights at each station aligned in opposite directions parallel to the centerline.

11. EQUIPMENT.

12. FIXTURES.

These light fixtures are self-contained elevated type with omnidirectional beams except the threshold/runway end lights shall be 180 degrees green and 180 degrees red, or they shall be unidirectional or bidirectional lights with color filters if required. These lights and equipment shall be as listed in table 1 and a typical light is shown in figure 2.

13. PHOTOMETRIC REQUIREMENTS.

The emitted light from the portable emergency lights shall be omnidirectional, bidirectional, or unidirectional in azimuth. The color of the emitted light shall be aviation white for the runway edge lights, aviation

TABLE 1. SCHEDULE OF LIGHTING EQUIPMENT FOR EMERGENCY LIGHTS

Purpose and Type of Fixture	Lamp	Battery	Filter
Runway edge, white, 66 or more for 10,000-foot runway.			
MIL-L-19661, type IA	Type PR-12, 2 per light. (1 is a spare.)		None
or			
FAA AC 150/5345-50, type L-863C	Type as determined by manufacturer.	Type as determined by manufacturer.	
Threshold/runway end, green/red, 16 or more per runway.			
MIL-L-19661, type IA	Type PR-12, 2 per light. (1 is a spare.)		Green 180°/red 180° type as determined by manufacturer.
or			
FAA AC 150/5345-50, type L-863 R/G	Type as determined by manufacturer.	Type as determined by manufacturer.	
Taxiway edge, blue, number varies with length and shape of taxiway.			
MIL-L-19661, type IA	Type PR-12, 2 per light. (1 is a spare.)		Blue, type as determined by manufacturer.

green/aviation red for threshold/runway end lights, and aviation blue for the taxiway edge lights. These colors shall be in accordance with ICAO, Annex 14, Vol. 1, App. 1. The preferred intensity for the white light is 20 candelas or more; however, omnidirectional fixtures which do not provide this intensity may be used. The omnidirectional fixtures for white light shall have an intensity at rated battery voltage not less than 7.5 candelas for elevation angles between 0 to 10 degrees and not less than 1.5 candelas for elevation angles to 15 degrees above horizontal. The lights shall be steady burning and the intensity after 12 hours of operation shall be not less than 50 percent of that at rated voltage. The intensity of the green light shall be not less than 20 percent, the red light not less than 15 percent, and the blue light not less than 2 percent of the intensity of the white light.

14. POWER AND CONTROLS.

15. The power for these lights shall be provided by the specified batteries. The control is by manual switches on the individual lights.

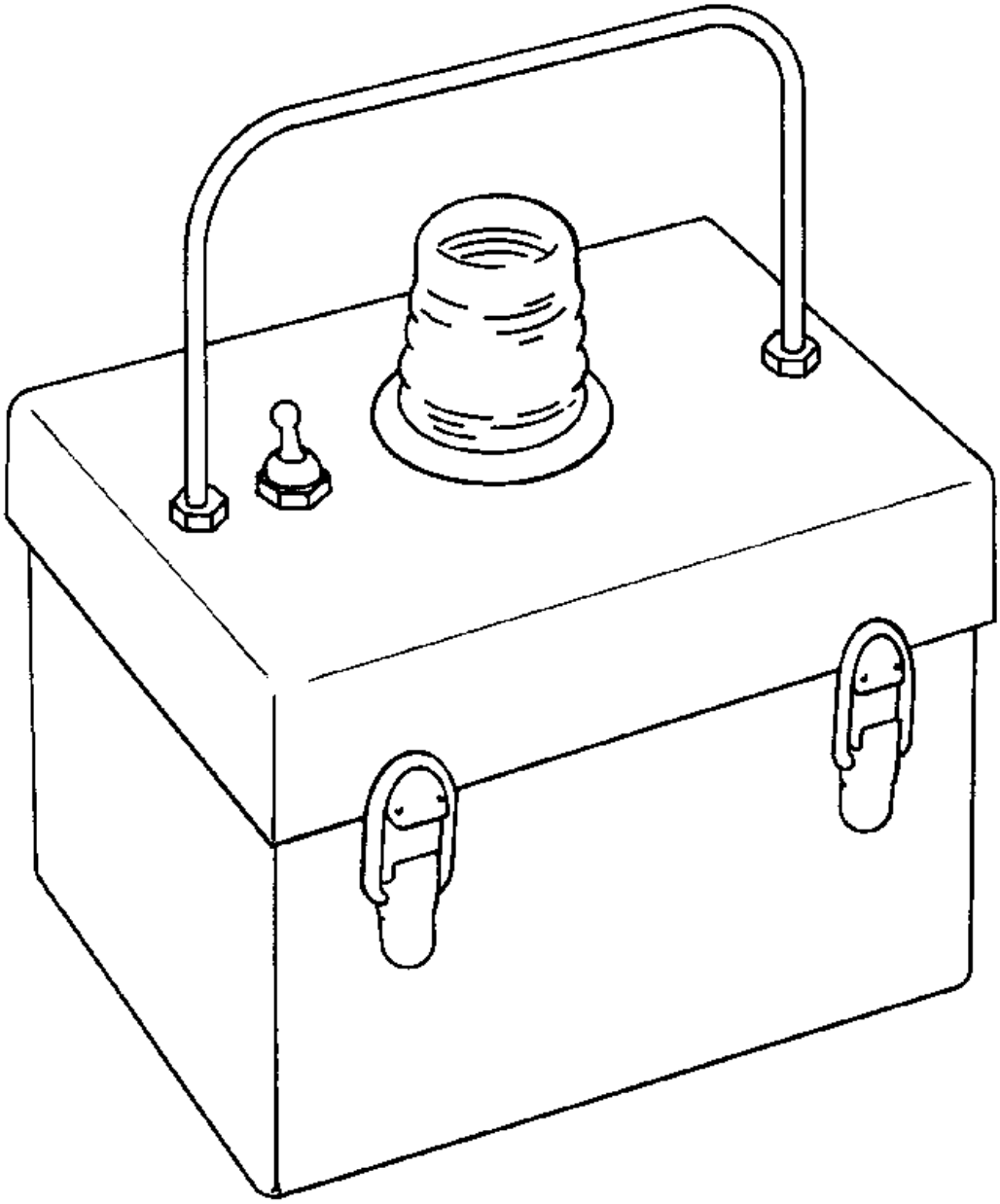

PORTABLE EMERGENCY AIRFIELD LIGHT:
MIL-L-19661, TYPE 1

LAMP: TYPE PR-12

FILTER: NONE, RUNWAY EDGE LIGHT
BLUE, TAXIWAY EDGE LIGHT GREEN/
RED, THRESHOLD/RUNWAY END LIGHT

Figure 2. Typical portable emergency airfield light

TECHNICAL MANUAL

HELIPAD VISUAL AIDS

SHOREBASED

Reference Material

Introduction 002 00
Helipad Markings 007 01
Helipad Perimeter Lights 007 02
Helipad Approach Lights 007 03
Heliport Runway Lights and Markings ~~(To be provided)~~ 007 04
Heliport Taxiway Lights and Markings ~~(To be provided)~~ 007 05
Special Helipad Lights 007 06
~~Helicopter Elevated Platforms (To be provided) ..... 007 07~~
Design Drawings for Visual Air Navigation Facilities ..... UFC 3-535-02
~~Airfield Lighting ..... MIL-HDBK-1023/1~~
Terminal Instrument Procedures (TERPS) ..... OPNAV Inst 372216
Standards for Specifying Construction of Airports ..... FAA AC 150/5370-10

Alphabetical Index

Subject **Page No.**

Description Of Helipad Visual Aids. 3
Existing Installations 2
Flight Rules. 2
General Flight Rules 2
General Information. 1
Helipad Visual Aids Requirements 2
IFR Categories 3
Implementation 3
Instrument Flight Rules (IFR). 2
Purpose. 1
Scope 2
Selection Of Helipad Visual Aids. 3
Standardization. 2
Visual Flight Rules (VFR) 2

Record of Applicable Technical Directives

None

1. GENERAL INFORMATION.

2. PURPOSE.

Helipad visual aids consist of marking and lighting on or near the helipad. The purpose of these visual aids is to provide guidance to helicopter pilots for safe takeoffs and landings during Visual Flight Rules (VFR) condition (WP002 00). They shall clearly define the helipad surface and its limits and provide directional and distance cues for proper orientation and control of the aircraft. The information must be easily recognized and used day or night.

3. SCOPE.

The helipad visual aids section of this Technical Manual contains the configuration requirements, applications, basic design and installation criteria, and equipment required for special operations of Navy shorebased helipads. Each helipad shall have adequate visual aids which will satisfy the requirements for the operations authorized. The requirements contained in the Work Package(s) (WP) provide guidance for all personnel servicing existing systems or designing new installations. Existing installations of similar aids may be used and maintained as installed. Major modifications, or upgrading of existing installations shall comply with the basic requirements of the WP for these aids.

4. STANDARDIZATION.

The WP for each system establishes the requirements to be used for most Navy helipads for that particular visual aid. By combining the WPs for all the helipad visual aids required, standardization of Navy helipads is attained. When deviations of installations are necessary, these changes shall be authorized in accordance with the approval procedures of WP002 00.

5. FLIGHT RULES.

6. GENERAL.

The types of helipad visual aids required depends on the kind of flight operations that will be performed. Flight operations are separated into Visual Flight Rules (VFR) operations and Instrument Flight Rules (IFR) operations (WP002 00). Helipad operations are intended for VFR conditions only, except when the associated airfield provides cues for IFR operations and the landing may be completed at the helipad. High intensity approach lights and heliport runway and taxiway visual aids WP are reserved until the requirements and potential systems have been further evaluated. The visual aids associated with helipad operations are indicated in table 1.

7. VISUAL FLIGHT RULES (VFR).

Flight operations for which the approach and landing guidance depends on visual contact with the ground may follow VFR. VFR requires good visibility and may apply for day or night operations. The VFR for operations at helipads are similar to those for fixed wing aircraft to airfields except for relief of some restrictions because of the special maneuvering characteristics of helicopters.

8. INSTRUMENT FLIGHT RULES (IFR).

Flight operations for which at least part of the navigation depends on electronic guidance must use IFR. IFR involve low ceilings or poor visibility or both during day or night. The requirements and procedures for IFR operations of helicopters are given in OPNAV Inst. 3722.16. IFR operations for helicopters at Navy shorebased airfields are usually limited to fixed-wing aircraft airfields with the landing at a helipad or other designated area.

9. IFR CATEGORIES.

To permit flight operations at different approach minimums IFR operations have been divided into categories as follows:

a. Nonprecision IFR: Uses non-visual aids, such as Tactical Air Navigation (TACAN), VHF

TABLE 1. HELIPAD VISUAL AIDS REQUIREMENTS

Visual Aids System	Authorized Operations		
		IFR Category	
	VFR	Non-Precision	Category I
Helipad Markings (WP007 01)	R	R	R
Helipad Perimeter Lights (WP007 02), if used at night	R	R	R
Helipad Landing and Approach Direction Lights (WP007 03) if approach direction is designated	OPT	NR	NR
High-Intensity Approach Lights (WP007 03)	**NR-**	**~~(To be provided)~~OPT**	**R**
Heliport Runway Lights and Markings (WP007 04)	**R**	**~~(To be provided)~~NR**	**NR**
Heliport Taxiway Lights and Markings (WP007 05)	**R**	**~~(To be provided)~~NR**	**NR**
Special Helipad Lights (WP007 06)	OPT	OPT	OPT

R - Required

OPT - Option as recommended by air station commander and approved by NAVAIR.

NR - Not Required.

Omnidirectional Range (VOR), VOR/TACAN, etc., providing directional guidance adequate for straight-in approaches.

b. Precision Approach IFR, Category I: Uses Instrument Landing System (ILS) or Precision Approach Radar (PAR) electronic approach aids and visual aids.

10. DESCRIPTION OF HELIPAD VISUAL AIDS.

11. The helipad perimeter lights and markings are the basic visual aids for operations to helipads. These visual aids identify the helipad area and its boundaries. The landing direction lights and approach direction lights are low-intensity lights for use to helipads where the preferred approach direction has been designated and the requirement is approved. The requirements for the visual aids for instrument approaches to helipads, for the runway and taxiway for heliports, and for elevated platforms have not been established and these WP are to be provided when available. Special visual aids, such as the beacon, wind direction indicator, helipad floodlights, and descent angle indicator, are determined on an individual basis for each helipad.

12. SELECTION OF HELIPAD VISUAL AIDS.

13. The types of helipad visual aids required depend on the mission and the approach minimums which may be necessary. Table 1 is a guide for determining the aids to be provided. The design requirements are found in the WP for each type of visual aid. For installation details refer to FA**A A**C 150/5370-10 for helipad markings, and ~~MIL-HDBK-1023/1~~**UFC 3-535-02** for helipad lighting.

14. IMPLEMENTATION.

The WP and requirements of this section of the Technical Manual are not intended to direct or request implementation but are to establish uniformity when implementation is undertaken.

TECHNICAL MANUAL

HELIPAD MARKINGS

SHOREBASED

Reference Material

~~Paint, Traffic and Airfield Marking, Solvent Base ..... FED-TT-P-85~~
~~Paint, Traffic, Black (Nonretroreflective) ..... FED-TT-P-110~~
Introduction 002 00
Colors FED-STD-595
Helipad Perimeter Lights 007 02
Special Helipad Lights 007 06
Beads (Glass Spheres), Retroreflective FED-TT-B-P-1325
Paint, Traffic and Airfield Marking, Water Emulsion Base FED-TT-P-1952
Standards for Specifying Construction of Airports ..... FAA AC 150/5370-10

Alphabetical Index

Subject **Page No.**

Borders for Markings 2
Closed Helipad Marking. 2
Colors 2
Description 2
Dimensions 2, 4
Existing Installations 2
Hospital Helipad Marking 2
General Information. 2
Identification Marking. 2
Installation Requirements 2
Installations 2
Justification Requirements. 2
Locations 2, 4
Materials. 6
Materials For Helipad Markings 5
Materials for Marking Unpaved Surfaces 2
Perimeter Markings 2
Purpose. 2
Related Facilities 2
Restrictions 6
Standard Helipad Marking 2

Record of Applicable Technical Directives

None

1. GENERAL INFORMATION.

2. PURPOSE.

This Work Package (WP) contains the requirements for surface markings for shorebased helipads. For this WP a helipad is defined as a prepared area designated for takeoff and landing of helicopters. These markings provide visual cues to pilots when performing these operations. Two types of markings are used:

a. Identification marking,

b. Perimeter or boundary markings.

These marking requirements shall be used for all paved helipad installations. Existing markings may be used until repainting is necessary. Deviations from these markings shall be approved by the procedures given in WP002 00. The requirements for marking closed helipads are included.

3. JUSTIFICATION REQUIREMENTS.

Any paved surface designated for use for landing and takeoff of helicopters shall be provided with painted identification and perimeter markings. Unpaved helipads shall be provided with some effective type of perimeter marking and, if practical, with identification marking. These markings may use materials other than paint as markings. Ground limestone, hedges, markers, colored gravel, contrasting vegetation, etc., may be used for marking unpaved surfaces.

4. RELATED FACILITIES.

Helipad markings are intended to provide the required visual guidance during daytime operations without the use of related facilities. For nighttime operations, perimeter lights (WP007 02) are required and floodlights (WP007 06) are optional.

5. DESCRIPTION.

6. IDENTIFICATION MARKING STANDARD HELIPAD.

The identification marking for a paved helipad shall be a capital letter “H” (see figure 1). The “H” marking shall be located in the center of the landing area, and oriented with the preferred approach direction. The dimensions shall vary with the size of the landing and takeoff area as shown in figure 1. The color shall be surface aviation white, and if the helipad is intended for use at night, shall be retroreflective white. If the paved surface is a light color and improved contrast is needed, the identification marking may be outlined with a lusterless black border. This black border shall not be less than 6 inches wide nor more than 12 inches wide.

7. IDENTIFICATION MARKING HOSPITAL HELIPAD.

The identification marking for a hospital or medivac helipad shall consist of a letter “H”, red in color positioned on a white cross made of a series of 4 squares adjacent to each of the sides of a square containing the letter “H”, as shown in figure 2. Each of the squares is 10’ on a side, the letter “H” is 10’ high with a stroke width of 18”, the width of the letter “H” is 5’ to 6’. The hospital helipad marking shall be accented so the cross arm of the letter “H” is at right angles to the preferred helicopter approach direction.

8. PERIMETER MARKINGS.

The limits of the safe landing area shall be square and marked by broken lines as shown in figure 1. The perimeter markings shall be oriented with the sides of the square parallel to the letter “H”. The perimeter markings shall consist of the corners and edge bars. The corners shall form right angles and the edge bars shall be located midway between the corner markings. The outer edges of the markings shall be along the designated limits of the landing and takeoff area. The dimensions shall be as shown in figure 1. The color of these markings shall be surface aviation white and, if the helipad is intended for use at night, shall be retroreflective white. If needed to improve contrast, these markings may be outlined with black borders between 6 and 12 inches wide.

9. CLOSED HELIPAD MARKING.

If a helipad is closed temporarily or permanently, the inoperative condition is indicated by a closed helipad marking. The closed marking shall be a nonretroreflective yellow X-shaped cross as shown figure 3. The cross shall be centered over the helipad identification marking. The dimensions shall be as indicated by the table in figure 3. The color shall be nonretroreflective yellow. If the helipad is permanently closed, the helipad markings shall be removed.

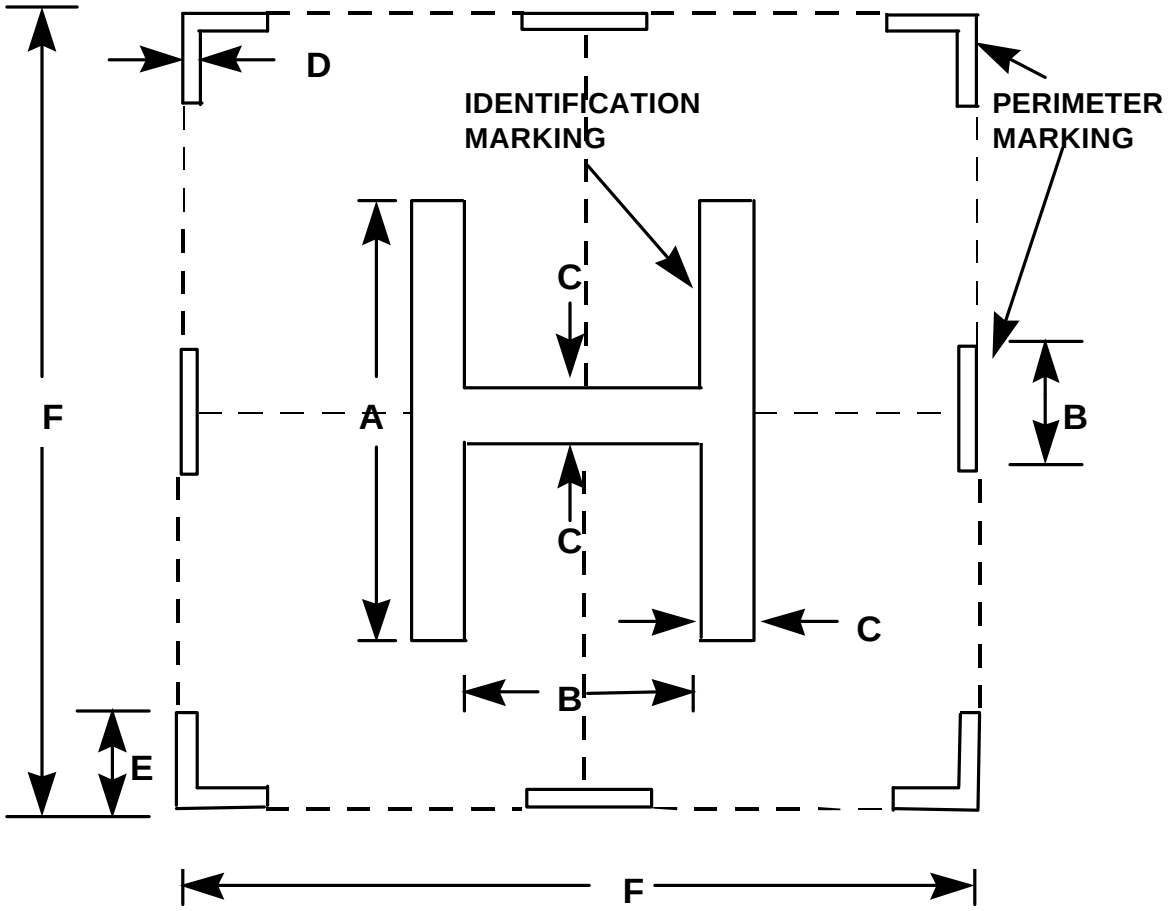

DIMENSIONS

A = 0.6F BUT 60' MAX.
B = 0.5A

HELIPAD SIZE (F)	PATTERN LINE WIDTH (C)	PERIMETER EDGE WIDTH (D)	CORNER EDGE LENGTH (E)
80' - 99'	5'	24"	10' (TYP)
100' - 150'	6'	30"	12' (TYP)

COLOR: RETROREFLECTIVE AVIATION SURFACE WHITE, EXCEPT HELIPADS FOR DAY OPERATIONS ONLY MAY BE NONRETROREFLECTIVE WHITE

Figure 1. Details of helipad identification and perimeter markings

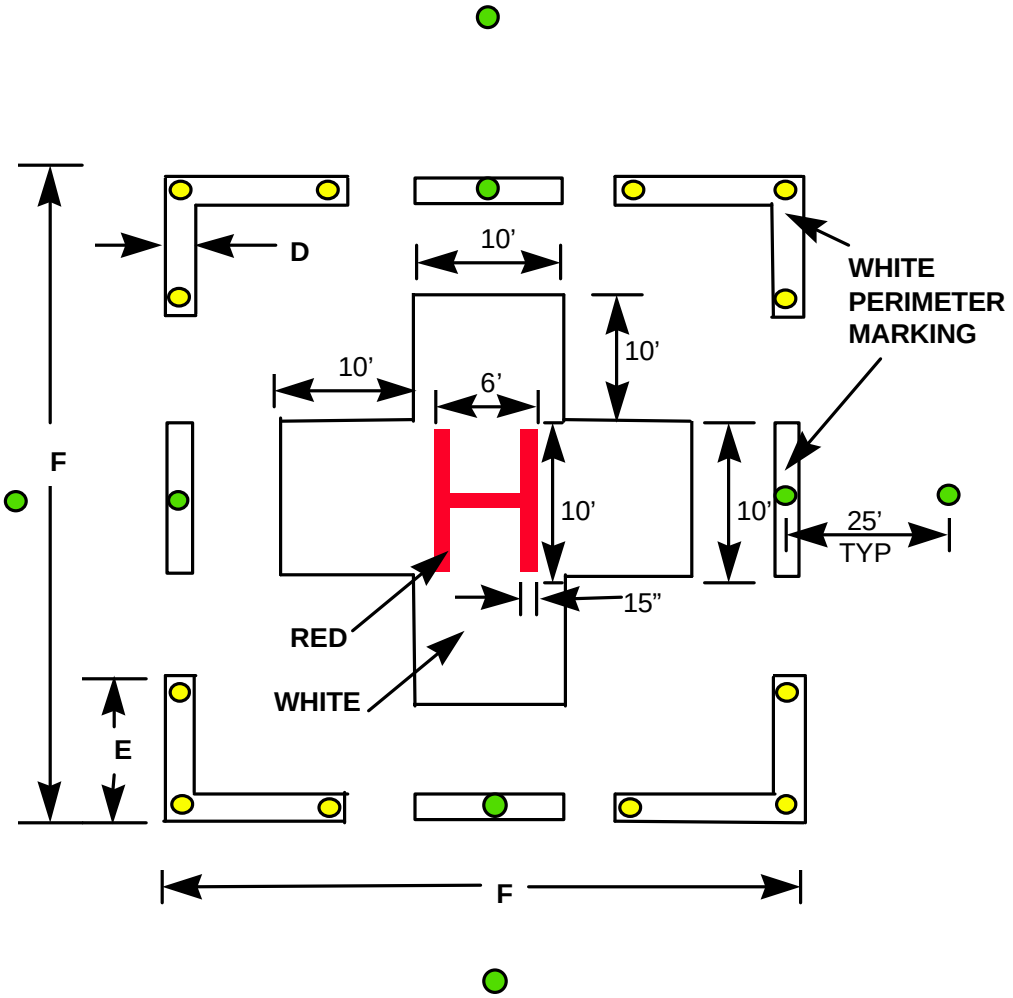

WING LIGHTS/MIDDLE FITTINGS - GREEN

PERIMETER LIGHTS - YELLOW

NOTE: MARKINGS SHOWN FOR REFERENCE ONLY.

HELIPAD SIZE (F)	PERIMETER EDGE WIDTH (D)	CORNER EDGE LENGTH (E)
80' - 99'	24"	10' (TYP)
100' - 150'	30"	12' (TYP)

Figure 2. Details for Hospital Helipad Identification

TABLE 1. MATERIALS FOR HELIPAD MARKINGS

Color of Marking	Federal Specification	Authorized Use
Retroreflective White	~~TT-P-85[1/] or~~ TT-P-1952, paint, white and TT-B-1325 glass spheres, type III, gradation A.	Helipad identification and perimeter markings.
Nonretroreflective White	~~TT-P-85[1/] or~~ TT-P-1952 paint, white	Helipad markings, daytime only.
Nonretroreflective Yellow	~~TT-P-85[1/] or~~ TT-P-1952 paint, yellow	Closed helipad marking.
Nonretroreflective Black	~~TT-P-110[1/]~~ Paint, black	Border around white or yellow markings.

~~[1/] Some area authorities may prohibit or restrict the use of this type of paint.~~

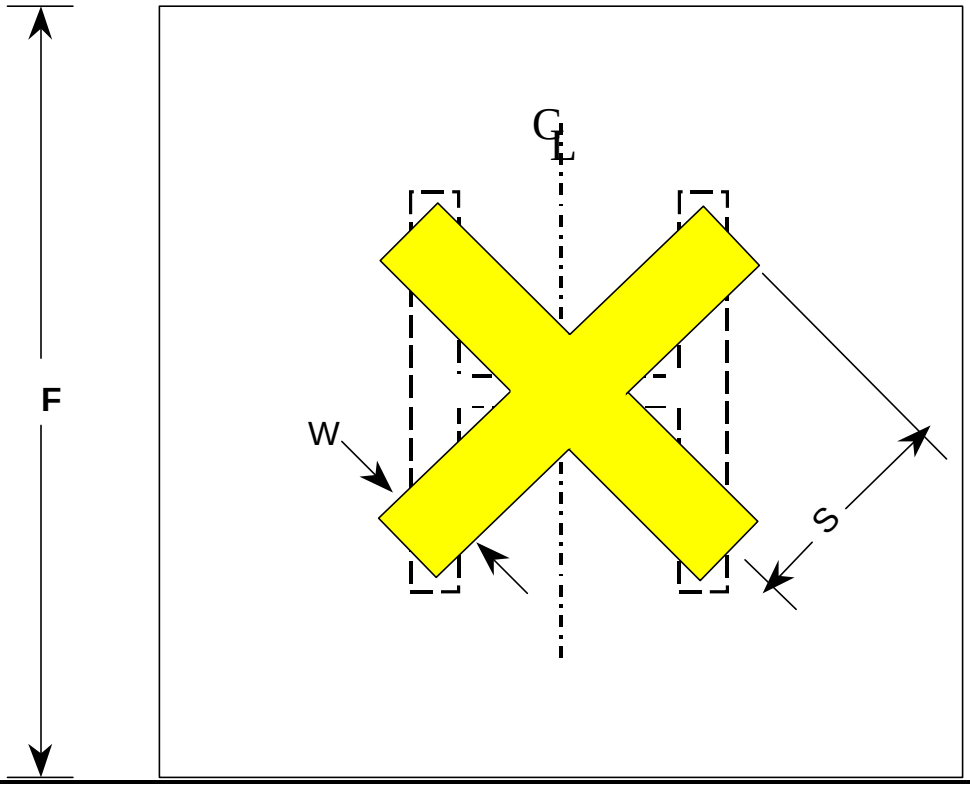

HELIPAD SIZE (F)	ARMS LENGTH (S)	ARM WIDTH (W)
80' - 99'	38'	15'
100' - 150'	42'	17'

COLOR: NONRETROREFLECTIVE AVIATION SURFACE YELLOW

Figure 3. Details of closed helipad markings

10. MATERIALS.

The materials required for the identification and perimeter markings are paint and retroreflective spheres (glass beads). The materials used should be approved for the purpose and the type of pavement. The colors shall be in accordance with FED-STD-595, chip #27875 for white, chip #23538 for yellow, and chip #27038 for black. The approved materials are shown in table 1. The closed helipad marking may be of yellow paints or, if temporary, of suitable tape or painted panels of an approved color.

11. RESTRICTIONS.

Regulations of some states such as California, or other authorities may prohibit or restrict the use of solvent base paints. For white and yellow markings, ~~this may require using~~ **use** type TT-P-1952~~ instead of type TT-P-85 paint~~. ~~For the~~ Slower drying type TT-P-1952 paint, timing of application of the retroreflective beads (spheres) may be required to assure adherence of the beads without sinking too deeply into the paint. ~~Also the black type TT-P-110 paint may not be acceptable, but any long-wearing semigloss or flat black paint, such as type TT-P-1952 with black pigment, suitable for the surface may be substituted.~~

TECHNICAL MANUAL

HELIPAD PERIMETER LIGHTS

SHOREBASED

Reference Material

Introduction 002 00
Helipad Markings 007 01
Helipad Approach Lights 007 03
Special Helipad Lights and Markings 007 06
Electrical Power and Control for Visual Aids 009 00
Constant-Current Regulators 009 02
Airfield Lighting Control Panels 009 05
Special Remote Control Equipment 009 06
Design Drawings for Visual Air Navigation Facilities ..... UFC 3-535-02
~~Airfield Lighting ..... MIL-HDBK-1023/1~~
Aeronautical Ground Light and Surface Marking Colors ..... ICAO, Annex 14, Vol. 1, App. 1
Specification for Runway and Taxiway Light Fixtures ..... FAA AC 150/5345-46
Isolation Transformers for Airport Lighting ..... FAA AC 150/5345-47

Alphabetical Index

Subject **Page No.**

Aiming 2
Controls 6
Description 2
Dimensions 2
Equipment 6
Existing Installations 2
Fixtures. 6
General Information. 2
Installation Requirements 2
Installations 2
Justification Requirements. 2
Methods Of Installation. 2
Photometric Requirements. 6
Power. 6
Power And Controls 6
Purpose. 2
Related Facilities 2
Schedule Of Perimeter Lights Equipment 4
The Intensity Requirements For Perimeter Lights 4
Tolerances 2

Record of Applicable Technical Directives

None

1. GENERAL INFORMATION.

2. PURPOSE.

This Work Package (WP) contains the requirements for the shorebased helipad perimeter lights. These lights define the boundaries of the helipad for helicopter operations at night. For this WP a helipad is defined as a prepared area designated for takeoff and landing of helicopters. The perimeter lights provide visual cues to pilots for identifying the helipad area during takeoff or landing operations. The lights shall be used for all new helipad lighting installations. Existing helipad lighting systems may continue to be used and maintained. Deviations from these lighting requirements for new installations or replacements of existing systems shall be approved in accordance with the procedures given in WP002 00.

3. JUSTIFICATION REQUIREMENTS.

Any helipad designated for operations at night or in low visibility weather during daytime, except if located on lighted runways or taxiways, shall be provided with perimeter lights. The perimeter lights for paved or unpaved helipads shall be similar except the method of installation may be different.

4. RELATED FACILITIES.

The helipad perimeter lights provide the required visual guidance at night for Visual Flight Rules (VFR) operations (WP002 00) without the use of related facilities. The helipad shall be provided with helipad markings (WP007 01). Related lighting facilities for VFR operations to helipads may include the following:

a. Landing direction and approach direction lights (WP007 03),

b. Heliport beacon and helipad floodlighting (WP007 06).

5. DESCRIPTION.

6. The helipad perimeter lights shall consist of a row of lights along or near the four sides of a helipad as shown in figure 1. These lights are usually the elevated type except semiflush lights may be used in areas where helicopters with wheels may be taxiing on the surface between the helipad and parking or service areas. Both types of fixtures shall emit omnidirectional yellow light.

7. INSTALLATIONS.

8. INSTALLATION REQUIREMENTS.

For installation details and requirements for helipad perimeter lights refer to ~~MIL-HDBK-1023/1~~**UFC 3-535-02**. General design and installation requirements for helipad perimeter lights are given below.

9. METHODS OF INSTALLATION.

The helipad perimeter lights are usually elevated type fixtures. The elevated lights shall be mounted on frangible couplings. If the helipad is paved, the elevated fixtures shall be mounted on light bases set in concrete or on conduit elbows set in concrete foundations. If the helipad is not paved, the fixtures may be installed on mounting stakes. The semiflush fixtures shall be mounted on light bases encased in concrete foundations. Since the beam of light is omnidirectional, aiming in the azimuth is not required. The elevation angle is fixed by the fixture, and the aiming is accomplished by leveling the fixture.

10. DIMENSIONS.

The layout for installing the perimeter lights is shown in figure 1. The light fixtures shall be located in a straight line ±6 inches along each edge of the helipad, and each line of lights shall be the same distance from the edge. The fixtures on opposite sides of the helipad shall be opposite each other and equidistant and parallel to the extended centerlines of the helipad. Usually the fixtures are adjacent to the helipad edge, but may be located not more than 10 feet from the edge. A fixture shall be located at or near each corner of the helipad, and three additional fixtures, equally spaced ±12 inches, are placed between the corner lights along each side. The overall height of the fixture above the ground shall not exceed 14 inches, except in areas with frequent snow accumulations to depths of 12 inches or more where with approval of Naval Air Systems Command the maximum height shall not exceed 24 inches above the edge of the helipad. If one of more lights are located in a taxiway or other traffic area, the fixtures in these areas shall be semiflush lights. The lights shall be level but directional aiming is not required.

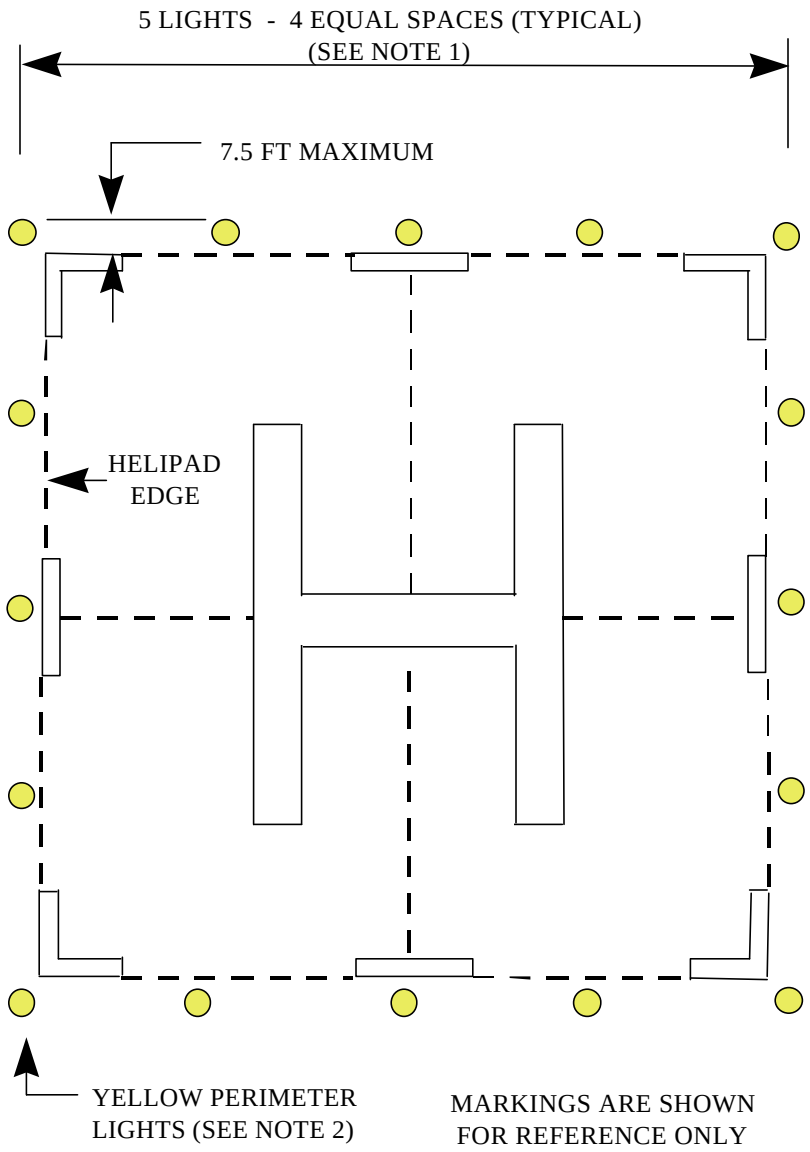

NOTE 1: **ALL FIXTURES SHALL BE THE SAME DISTANCE FROM THE HELIPAD EDGES, A FIXTURE SHALL BE LOCATED AT OR NEAR EACH CORNER. THREE ADDITIONAL FIXTURES SHALL BE EQUALLY SPACED BETWEEN THE CORNER LIGHTS ALONG EACH EDGE.**

NOTE 2: **THE COLOR EMITTED BY THE PERIMETER LIGHTS SHALL BE AVIATION YELLOW.**

Figure 1. Typical layout of helipad perimeter lights

TABLE 1. SCHEDULE OF PERIMETER LIGHTS EQUIPMENT

Purpose and Type of Fixture	Lamp Rating and Type	Isolation Transformer	
		Rating	FAA Type AC150/5345-47
Elevated lights, 16.			
FAA AC 150/ 5345-46, type L-861, omnidirectional, yellow	6.6A 45W, type as determined by manufacturer.	45W 6.6/6.6A	L-830-1
Semiflush lights optional.			
FAA AC 150/ 5345-46, type L-852E, omnidirectional, yellow	6.6A, watts and type as determined by manufacturer.	6.6/6.6A. watts and type as determined by manufacturer.	

TABLE 2. THE INTENSITY REQUIREMENTS FOR PERIMETER LIGHTS

Fixture Type	Specified Intensities (candelas)[1/] for Vertical Angles		
Preferred	3° to 15° 40 minimum	15° to 25° 15 minimum	45° to 90° 5 minimum
L-861	2° to 10° 37 minimum 67 average	10° to 15° 20 minimum	
L-852E[2/]	50 minimum for average		

1/ The emitted light shall be omnidirectional in azimuth and aviation yellow in color.

2/ For semiflush fixtures, the intensity at not more than six structural ribs may be 25 percent less than the minimum average required.

LIGHT: HELIPAD PERIMETER, ELEVATED FAA AC 150/5345-46, TYPE L-861, YELLOW, OMNI-DIRECTIONAL.

LAMP: 6.6A, 45 WATTS, TYPE AS DETERMINED BY MANUFACTURER.

GLOBE: 360° YELLOW, TYPE AS DETERMINED BY MANUFACTURER.

ISOLATION TRANSFORMER: 6.6/6.6A, WATTS AND TYPE AS DETERMINED BY MANUFACTURER FAA AC 150/5345-47.

MOUNT ON FRANGIBLE COUPLING.

COLOR OF EMITTED LIGHT:

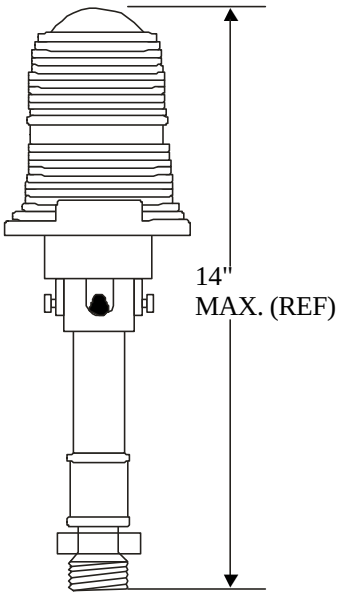

Figure 2. Typical elevated helipad perimeter light, type L-861

LIGHT: HELIPAD PERIMETER SEMIFLUSH FAA AC 150/5345-46, TYPE L-852E, OMNIDIRECTIONAL YELLOW OR WHITE.

LAMP: 6.6A, WATTS AND TYPE AS DETERMINED BY MANUFACTURER.

FILTER: AVIATION YELLOW, TYPE AS DETERMINED BY MANUFACTURER.

ISOLATION TRANSFORMER: 6.6/6.6A, WATTS AND TYPE AS DETERMINED BY MANUFACTURER, FAA AC 150/5345-47

COLOR OF EMITTED LIGHT: AVIATION YELLOW FOR LANDING DIRECTION LIGHTS AND AVIATION WHITE FOR APPROACH DIRECTION LIGHTS.

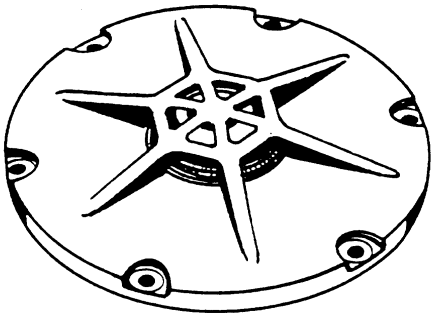

Figure 3. Typical semiflush helipad perimeter light, type L-852E

11. EQUIPMENT.

12. FIXTURES.

The lighting equipment required for the perimeter lights is given in table 1. Typical fixtures for the elevated lights are shown in figure 2. Typical fixtures for the semiflush lights are shown in figure 3.

13. PHOTOMETRIC REQUIREMENTS.

The light emitted from the helipad perimeter fixtures shall be omnidirectional and the color shall be aviation yellow in accordance with ICAO, Annex 14, Vol. 1, App. 1. Not less than three steps of intensity shall be provided and the lowest step shall be less than 10 percent of the rated intensity. The preferred and specified intensity requirements for these lights are given in table 2.

14. POWER AND CONTROLS.

15. POWER.

The electrical power for the helipad perimeter lights shall be provided by one or more 6.6-ampere series circuits (WP009 00). The constant-current regulator shall have five intensity steps providing current at 6.6, 5.2, 4.1, 3.4, and 2.8 amperes (WP009 02). This regulator may furnish the power also for the landing direction lights and the approach direction lights. Emergency power is not required but should be used if it is available.

16. CONTROLS.

The helipad lighting controls shall be separate from other airfield visual aids although the controls should be provided on the remote airfield lighting control panel (WP009 05) in the air traffic control tower and airfield lighting vault. The helipad perimeter lighting shall be provided with an ON-OFF switch and a brightness switch for three or more intensity settings. Other helipad lights, such as landing direction lights and approach direction lights, or other helipads may be controlled by these switches. Remote-control circuit-selector switches (WP009 06) may be used to permit energizing the perimeter lights with or without other helipad lights. The lower intensity settings may be selected to provide the preferred intensities for the particular helipad and operating conditions. For helipads not equipped for air traffic control, the intensity control may use manual switches or automatic control by photoelectric switches or clock-driven timers.

TECHNICAL MANUAL

HELIPAD APPROACH LIGHTS

SHOREBASED

Reference Material

Introduction 002 00
Helipad Markings 007 01
Helipad Perimeter Lights 007 02
Special Helipad Lights and Markings 007 06
Electrical Power and Control for Visual Aids 009 00
Constant-Current Regulators 009 02
Airfield Lighting Control Panels 009 05
Special Remote Control Equipment 009 06
Design Drawings for Visual Air Navigation Facilities ..... UFC 3-535-02
~~Airfield Lighting ..... MIL-HDBK-1023/1~~
Aeronautical Ground Light and Surface Marking Colors ..... ICAO, Annex 14, Vol. 1, App. 1
Circuit Selector Switch ..... FAA AC 150/5345-5
Specification for Runway and Taxiway Light Fixtures ..... FAA AC 150/5345-46
Isolation Transformers for Airport Lighting ..... FAA AC 150/5345-47

Alphabetical Index

Subject **Page No.**

Aiming 2
Approach Direction Lights 2
Approach Lights CAT I 2
Controls 6
Description 2
Dimensions 2
Equipment 4
Existing Installations 2
Fixtures. 4
General Information. 2
Installation Requirements 2
Installations 2
Justification Requirements. 2
Landing Direction Lights 2
Methods Of Installation. 2
Photometric Requirements. 4
Power. 4
Power And Controls 4
Purpose. 2
Related Facilities 2
Schedule Of Helipad Approach Lights Equipment 4
The Intensity Requirements For Helipad Approach Lights 6
Tolerances 2

Record of Applicable Technical Directives

None

1. GENERAL INFORMATION.

2. PURPOSE.

This Work Package (WP) contains the requirements for the approach lights for shorebased helipad intended for operations in Visual Flight Rules (VFR) conditions only (WP002 00). These lights indicate the preferred direction to the helipad for helicopter approach and landing operations at night. For this WP a helipad is defined as a prepared area designated for takeoff and landing of helicopters. The approach lights provide visual cues to helicopter pilots for directional guidance along the designated approach path and landing direction to the helipad for landings. They are to be installed only when it has been determined that the need to indicate a landing direction and an approach direction is necessary. The lights shall be used for all new helipad approach lighting installations. Existing helipad landing direction lights and approach direction lights may continue to be used and maintained. Deviations from these lighting requirements for new installations or replacements of existing systems shall be approved in accordance with the procedures of WP002 00.

3. JUSTIFICATION REQUIREMENTS.

Any helipad designated for helicopter operations at night in VFR conditions, for which a preferred landing direction has been established, shall install landing direction lights. Where additional approach guidance is required, approach direction lights also shall be installed. Landing direction lights may be provided without using approach direction lights, but approach direction lights require the installation of landing direction lights.

4. RELATED FACILITIES.

Related visual aids shall include a and b and may include c, d, and e:

a. Helipad markings (WP007 01),

b. Helipad perimeter lights (WP007 02),

c. Heliport beacon (WP007 06),

d. Heliport floodlights (WP007 06),

e. Wind direction indicator (WP007 06).

5. DESCRIPTION.

6. The helipad approach light system shall consist of a row of landing direction and approach direction lights installed as shown in figure 1. These lights are usually the elevated type except semiflush lights may be used in areas where helicopters with wheels may be taxiing on the surface. The lights shall emit omnidirectional beams.

a. Landing Direction Lights. The landing direction lights shall consist of a single row of six yellow lights outward from the helipad perimeter lights centered on the helipad in the established direction for the approach.

b. Approach Direction Lights. The approach direction lights shall consist of two parallel rows of lights extending outward from the last landing direction light. Each row shall have five pairs of white lights.

c. Helipad IFR Approach Lights Category I. These lights are installed whenever it has been determined that additional approach guidance is considered necessary for instrument meteorological conditions, with a decision height of 200 feet and an RVR of 2400 feet.

d. Configuration of IFR Approach Lights. The approach lighting system will be symmetrical about, and extend for the entire length of, the centerline of the helipad direction lights. This additional light system starts at the position of the approach direction lights, shown in figure 1, at 125 feet from the helipad and extending out to 1025 feet, shown in figure 2.

7. INSTALLATIONS.

8. INSTALLATION REQUIREMENTS.

For installation details and requirements for helipad approach lights, refer to ~~MIL-HDBK-1023/1~~**UFC 3-535-02**. General design and installation requirements for helipad approach lights are given below.

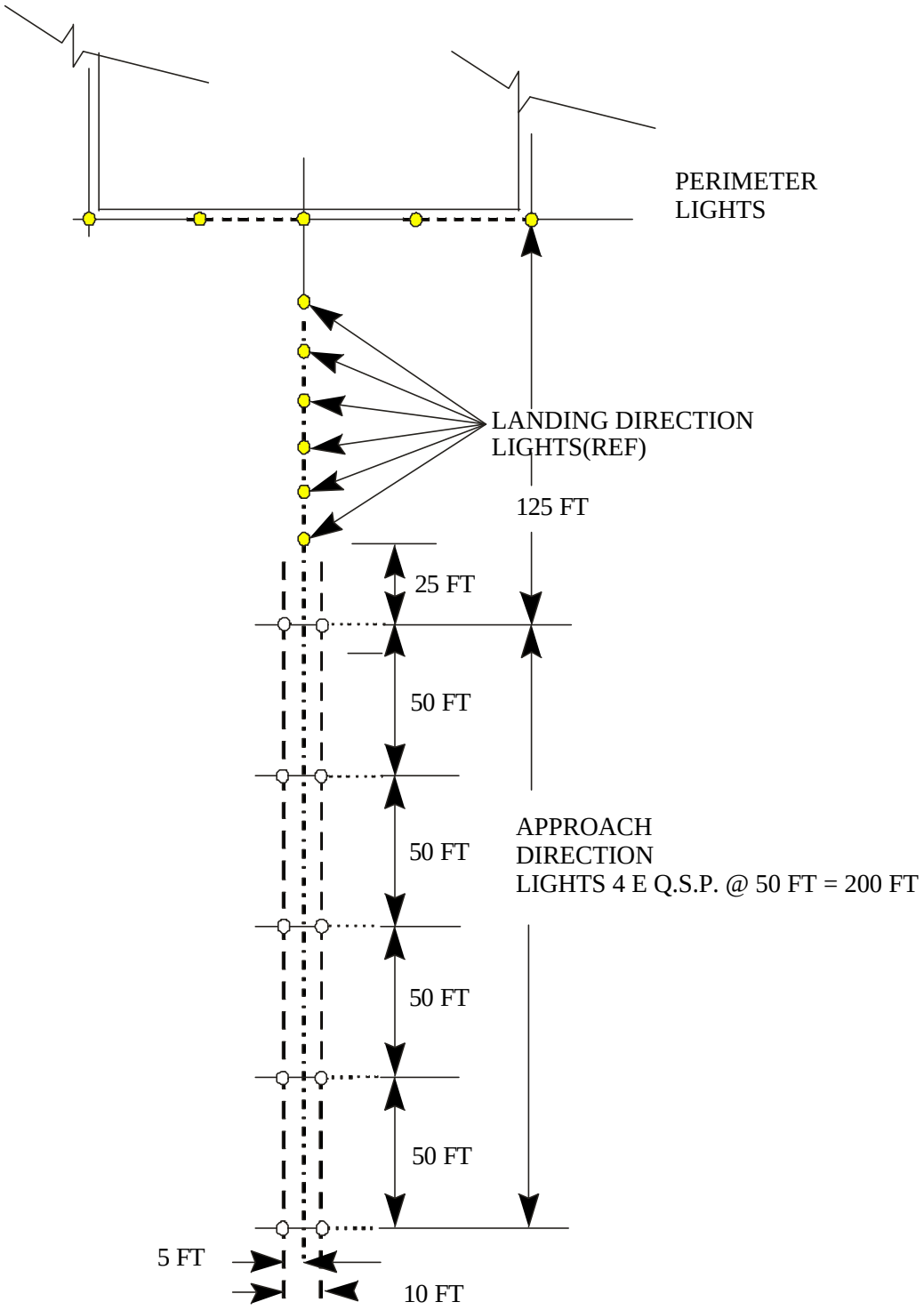

Figure 1. Layout for helipad approach lights

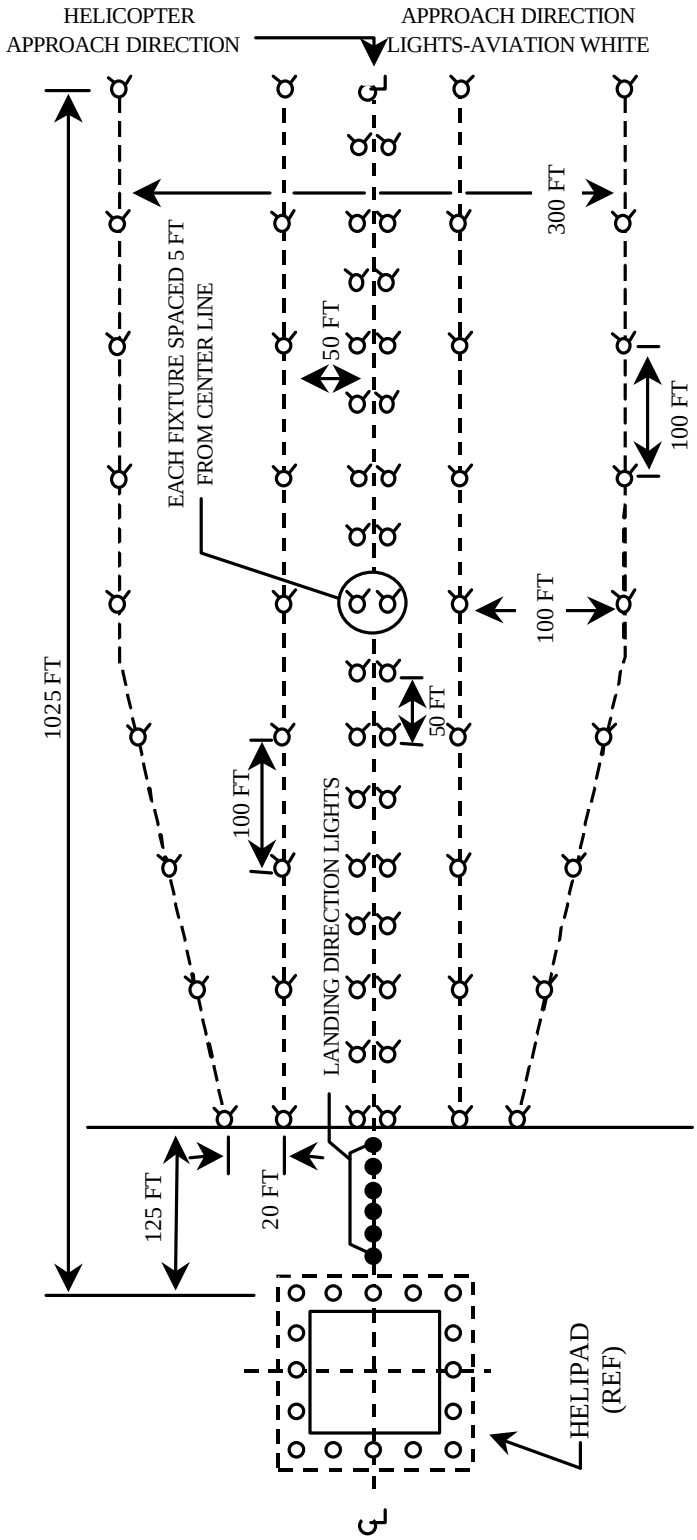

NOTES:

(1) ○ Elevated or semi-flush omni-directional light fixture with luminous features.

(2) ● Normally elevated omni-directional light fixture with luminous features.

(3) ⊄ Normally elevated uni-directional light fixtures.

(4) Elevated light fittings to be frangible with break-off point at top edge of base mounted plate.

(5) Light fixtures shall be mounted on a horizontal plane and shall not be greater than 18 inches above grade of the helipad. Where deviation of the horizontal plane is necessary, tolerance is to be +2% or -1% in the longitudinal slope. Where a slope is established for the landing direction lights, the same slope shall be continued for the approach direction lights.

(6) Glide slope and setting angles:

glide slope angle	setting angle
3 degrees	6 degrees
8 degrees	11 degrees
9 degrees	15 degrees

(7) If multiple glide slope angles are used, the mean value of 11 degree setting angle shall be used. Three or five progressive stages of brilliance are required for approach direction lights.

Intensities:

A. Horizontal plane 20,000 CDs beam spread ±7.5°.

B. Horizontal plane 5,000 CDs beam spread ±12.5°.

Figure 2. Approach lights Category I

9. METHODS OF INSTALLATION.

The helipad approach lights are usually elevated type fixtures. Elevated fixtures shall be mounted on light bases set in concrete or on conduit elbows set in concrete foundations. For either method of mounting, the fixtures shall be mounted on frangible couplings. Fixtures located in paved areas for taxiing wheel-type helicopters or surface traffic shall be semiflush fixtures mounted on light bases encased in concrete foundations. Since the beam of light is omnidirectional, aiming is not required. The elevation angle is determined by the fixture, and the aiming is accomplished by leveling the fixture.

10. DIMENSIONS.

The layout for installing the perimeter lights is shown in figure 1. Preferably, the approach lights shall be located in a horizontal plane; however, where terrain makes it impractical to stay in the horizontal plane, the elevation of the lights shall be along a continuous slope between +2 and -1 percent. The landing direction lights shall be located in a straight line ±6 inches along the extended centerline of the helipad. The first light shall be 25 ±1 feet from the line of helipad perimeter lights. The remaining lights shall be equally spaced at 15 ±1 feet with the sixth light 100 feet from the line of from the helipad centerline. The lines shall be 10 feet apart and symmetrical about the helipad centerline. The first pair of lights shall be 25 ±1 feet from the last landing direction light and the other pairs of lights shall be equally spaced at 50 ±1 feet for a total distance of 325 feet from the line of perimeter lights. The height of the individual lights shall be no more than ±2 inches from the established slope, except that in areas with frequent accumulations of snow to depths of 12 inches or more, the elevated lights may with approval of Naval Air Systems Command have height of at least 24 inches above the ground or surface. The height of semiflush lights shall be not more than one inch above the paved surface.

11. EQUIPMENT.

12. FIXTURES.

The lighting equipment required for the helipad approach lights is given in table 1. Typical fixtures for the elevated lights are shown in figure ~~3~~2. Typical fixtures for the semiflush lights are shown in figure ~~4~~3.

TABLE 1. SCHEDULE OF HELIPAD APPROACH LIGHTS EQUIPMENT

Purpose and Type of Fixture	Lamp Rating and Type	Isolation Transformer	
		Rating	FAA Type AC150/5345-47
Elevated landing direction lights, 16.			
FAA AC 150/ 5345-46, type L-861, omnidirectional, yellow	6.6A 45W, type as determined by manufacturer.	45W 6.6/6.6A	L-830-1
Semiflush landing direction lights, optional.			
FAA AC 150/ 5345-46, type L-852E, omnidirectional, yellow	6.6A, watts and type as determined by manufacturer.	6.6/6.6A. watts and type as determined by manufacturer.	
Elevated approach direction lights, 10.			
FAA AC 150/ 5345-46, type L-861, omnidirectional, white	6.6A 45W, type as determined by manufacturer.	45W 6.6/6.6A	L-830-1
Circuit Selector.			
FAA AC 150/ 5345-46, type L-847		5000V, 6.6A or 20A. One or more circuits.	

13. PHOTOMETRIC REQUIREMENTS.

The light emitted from the helipad approach lights shall be omnidirectional and the color shall be aviation yellow for landing direction lights and aviation white for approach direction lights in accordance with ICAO, Annex 14, Vol. 1, App. 1. Three or more steps of intensity shall be provided and the lowest step shall be less than 10 percent of the rated intensity. The preferred and specified intensity requirements for these lights are given in table 2.

14. POWER AND CONTROLS.

15. POWER.

The electrical power for the helipad perimeter lights shall be provided by a 6.6-ampere series circuit (WP009 00). The constant-current regulator shall have five intensity steps providing current at 6.6, 5.2, 4.1, 3.4, and 2.8 amperes (WP009 02). This regulator may furnish the power for the helipad perimeter lights. Emergency power is not required but should be used if it is available.

LIGHT: HELIPAD PERIMETER, ELEVATED FAA AC 150/5345-46, TYPE L-861, OMNIDIRECTIONAL, YELLOW OR WHITE.

LAMP: 6.6A, 45 WATTS, TYPE AS DETERMINED BY MANUFACTURER.

ISOLATION TRANSFORMER: 6.6/6.6A, 45 WATTS, FAA AC 150/5345-47, TYPE L-830-1.

MOUNT ON FRANGIBLE COUPLING.

COLOR OF EMITTED LIGHT: AVIATION YELLOW FOR LANDING DIRECTION LIGHTS AND AVIATION WHITE FOR APPROACH DIRECTION LIGHTS.

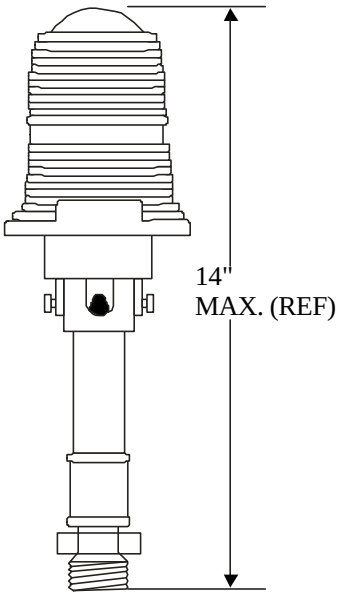

Figure ~~2~~3. Typical elevated helipad perimeter light, type L-861

LIGHT: HELIPAD PERIMETER SEMIFLUSH FAA AC 150/5345-46, TYPE L-852E, OMNIDIRECTIONAL YELLOW OR WHITE.

LAMP: 6.6A, WATTS AND TYPE AS DETERMINED BY MANUFACTURER.

FILTER: AVIATION YELLOW, TYPE AS DETERMINED BY MANUFACTURER..

ISOLATION TRANSFORMER: 6.6/6.6A, WATTS AND TYPE AS DETERMINED BY MANUFACTURER, FAA AC 150/5345-47

COLOR OF EMITTED LIGHT: AVIATION YELLOW FOR LANDING DIRECTION LIGHTS AND AVIATION WHITE FOR APPROACH DIRECTION LIGHTS.

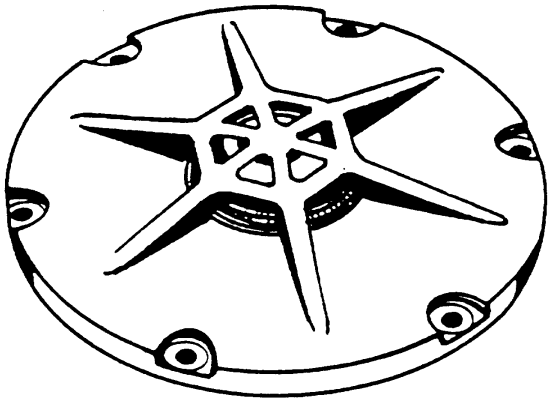

Figure ~~3~~4. Typical semiflush helipad perimeter light, type L-852E

TABLE 2. THE INTENSITY REQUIREMENTS FOR HELIPAD APPROACH LIGHTS

Fixture Type	Specified Intensities for Vertical Angles (candelas)		
	Yellow Landing Direction Lights[1/]		
Preferred	3° to 15° 40 minimum	15° to 25° 15 minimum	45° to 90° 5 minimum
L-861	2° to 10° 37 minimum 67 average	10° to 15° 20 minimum	
L-852E[2/]	50 minimum for average		
	White Landing Direction Lights[3/]		
Preferred	3° to 15° 100 minimum	15° to 25° 40 minimum	45° to 90° 10 minimum
L-861	2° to 10° 75 minimum 125 average	10° to 15° 40 minimum	
L-852E[2/]	100 average		

1/ The emitted light shall be omnidirectional in azimuth and aviation yellow in color.

2/ For semiflush fixtures, the intensity at not more than six structural ribs may be 25 percent less than the minimum average required.

3/ The emitted light shall be omnidirectional in azimuth and aviation white in color.

16. CONTROLS.

The helipad lighting controls shall be separate from other airfield visual aids although for helipads on airfields the controls should be provided on the remote airfield lighting control panels (WP009 05) in the air traffic control tower and airfield lighting vault. The helipad approach lighting shall be provided with an ON-OFF switch and a brightness switch for three or more intensity settings. The controls for the approach lights shall be interconnected to prevent these lights from operating unless the perimeter lights are operating. The landing direction lights may be operated without the approach direction lights, but the approach direction lights must have both the perimeter lights and the landing direction lights operating. Remote-control circuit-selector switches (WP009 06) may be used to permit energizing the perimeter lights with or without the helipad approach lights. The lower intensity settings may be selected to provide the preferred intensities for the particular helipad and operating conditions. For helipads not equipped for air traffic control, the intensity control may use manual switches or automatic control by photoelectric switches or clock-driven timers.

TECHNICAL MANUAL

HELIPORT RUNWAY LIGHTS AND MARKINGS

SHOREBASED

~~(To be provided)~~**See Army/Air Force UFC 3-535-01, Design Standards for Visual Air Navigation Facilities, Chapter 8 "Standards for Lighting Heliports" available on the following web site:**

http://cadlib.wes.army.mil/

TECHNICAL MANUAL

HELIPORT TAXIWAY LIGHTS AND MARKINGS

SHOREBASED

(To be provided)

TECHNICAL MANUAL

SPECIAL HELIPAD LIGHTS

SHOREBASED

Reference Material

Introduction 002 00
Obstruction Lighting 003 10
Helipad Markings 007 01
Helipad Perimeter Lights 007 02
Helipad Approach Lights 007 03
Electrical Power and Control for Visual Aids 009 00
Design Drawings for Visual Air Navigation Facilities ..... UFC 3-535-02
~~Airfield Lighting ..... MIL-HDBK-1023/1~~
Aeronautical Ground Light and Surface Marking Colors ..... ICAO, Annex 14, Vol. 1, App. 1
Specification for Airport and Heliport Beacons ..... FAA AC 150/5345-12
Specification for Wind Cone Assemblies ..... FAA AC 150/5345-27

Alphabetical Index

Subject **Page No.**

Beacon 2
Beacon Installation 2
Controls 6
Descent Angle Indicator. 2
Descent-Angle Indicator Installation. 3
Description 2
Dimensions 2
Equipment 3
Existing Installations 2
Fixtures. 3
Floodlights 2
Floodlights Installation. 3
General Information. 2
Helipad Floodlights 2
Heliport Beacon 2
Installation Requirements 2
Installations 2
Justification Requirements. 2
Photometric Requirements. 3
Power. 5
Power And Controls 5
Purpose. 2
Related Facilities 2
Schedule Of Special Helipad Lights Equipment 6
Wind Cone 2
Wind Direction Indicator 2
Wind Indicator Installation. 2

Record of Applicable Technical Directives

None

1. GENERAL INFORMATION.

2. PURPOSE.

This Work Package (WP) contains the requirements for special lights and visual aids for helipads. These visual aids for approach, landing, and takeoff operations may provide special visual functions that are different. These visual aids include airport beacons, wind direction indicators, floodlights, and descent-angle indicators. These visual aids are optional aids for helipads with special operations or location requirements. For new installations the requirements for a specific visual aid shall apply. Existing installations of these visual aids may be used and maintained until replacements of the installation is required.

3. JUSTIFICATION REQUIREMENTS.

These special lights and visual aids are not required for basic helipad installations. Justification is needed for permission to install the particular aid. Approval for installation or for changes in the requirements may be obtained as indicated in WP002 00.

4. RELATED FACILITIES.

These visual provide information for a special purpose and may not be required for a particular helipad. Related visual aids shall include a and b and may include c listed below:

a. Helipad markings (WP007 01),

b. Helipad perimeter lights (WP007 02),

c. Landing direction and approach direction lights (WP007 03).

5. DESCRIPTION.

6. HELIPORT BEACON.

The helipad beacon shall provide identification for a lighted helipad or heliport when it is not closely associated with a lighted airfield. The heliport beacon shall alternately flash the colors of white, green, and yellow. The white flash should be two closely spaced peaks. The flash rate shall be between 10 and 15 flash sequences per minute with the time between adjacent colors one-third of the sequence time. These beacons are usually the rotating type (see figure 1).

7. WIND DIRECTION INDICATOR.

The wind direction indicator that indicates the wind direction at the helipad shall be an 8-foot wind cone preferably of the type with a low-impact-resistant support (see figure 2). This wind cone shall be lighted for night operations if the helipad is lighted. The fabric cones shall be orange or white to provide good contrast with the background when viewed from the air.

8. HELIPAD FLOODLIGHTS.

Helipad floodlights shall be used to illuminate the helipad surface at night to provide visual cues to the pilot for determining his height above the surface during the touchdown phase of his approach. The floodlights shall provide a uniform illumination of the helipad surface. When installed the fixtures shall not permit any direct light to be visible above the horizontal. The fixture shall emit a narrow fan-shaped illuminating beam for which the axis of the beam shall be adjustable in elevation between 1 degree up and 5 degrees down from horizontal.

9. DESCENT ANGLE INDICATOR.

Reserved.

10. INSTALLATIONS.

11. INSTALLATION REQUIREMENTS.

For installation requirements and details for helipad floodlights, refer to ~~MIL-HDBK-1023/1~~**UFC 3-535-02**. General design and installation requirements for these visual aids are given below.

12. BEACON INSTALLATION.

A helipad beacon shall not be installed within one mile of an existing airfield beacon or usable runway. The helipad beacon shall be located not more than 1500 feet from the helipad or one of several helipads. The beacon should be visible from any direction and should be not less than 50 feet above the ground level and above the surface of the helipads. If a control tower is provided, the beacon shall be not less than 15 feet above the control tower floor. An existing water tower or building or a special tower may be used to support the beacon. The axis of rotation of the beacon shall be vertical. The axes of the light beams shall be aimed not less than 5 degrees above the horizontal with any light below the horizontal not more than 1000 candelas. Light shields may be used to reduce intensity below the horizontal.

13. WIND INDICATOR INSTALLATION.

The wind cone shall be located near the helipad or helipads in a location where the winds are representative of those occurring at the helipad. If

HELIPORT BEACON:
FAAAC 150/5345-12, TYPE L-801H
CLASS 2

LAMPS: 3, RATING AND TYPE AS DETERMINED BY THE MANUFACTURER

TRANSFORMER: VOLTAGE DISTRIBUTION, COMMERCIAL, RATING AS DETERMINED BY THE MANUFACTURER

COLORS: DOUBLE-PEAKED WHITE, GREEN, AND YELLOW

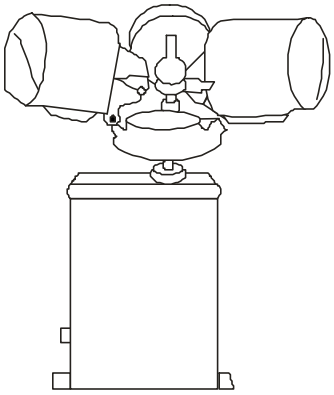

Figure 1. Typical heliport beacon, type FAA L-801H

feasible the wind cone shall be not less than 150 feet or more than 500 feet from the helipad edge or the helipad approach direction centerline. The height of the wind indicator shall not exceed 10 feet. The support for the wind indicator shall be mounted on a concrete foundation and shall be of a low-impact-resistant type or have a frangible section. The fabric cone (sock) shall be illuminated if helipad perimeter lights are provided.

14. FLOODLIGHTS INSTALLATION.

The location of the helipad floodlights shall be as shown in figure 3. The floodlights shall be located not less than 50 feet from the edges on opposite sides of helipad parallel to and symmetrical about the centerline of the designated approach or approach most frequently used for night landings. The number of lights and the spacing between lights may vary with the size of the helipad. Example: for a square helipad with 100-foot sides, four lights along each side spaced 25 feet apart is typical. The height of the fixtures shall be not more than 48 inches above the helipad surface. The fixtures shall be installed on a stable concrete foundation and mounted on frangible couplings. The axes of the beams of light shall be adjusted in azimuth and elevation to obtain uniform illumination of the helipad surface without having any direct light visible above the horizontal.

15. DESCENT-ANGLE INDICATOR INSTALLATION.

(Reserved).

16. <u>EQUIPMENT.</u>

17. FIXTURES.

The equipment for the special helipad lights shall be as given in table 1 and shown in figures 1 and 2.

18. PHOTOMETRIC REQUIREMENTS.

The photometric requirements for the special helipad lights shall be as follows:

a. Heliport beacon. The emitted light from the beacon shall be visible through 360 degrees in azimuth and may be provided by a rotating beacon or omnidirectional flashing beacons. The vertical beam width shall be not less than 9 degrees at 50 percent of the peak intensity. Intensity below the horizontal shall be less than 1000 candelas. The color of the emitted light shall be aviation white, aviation green, and aviation yellow in accordance with ICAO, Annex 14, Vol. 1, App. 1 except the white may be xenon white. The effective intensity of the white flashes with the axis of the beacon 5 degrees above horizontal shall be not less than 25,000 candelas for vertical angles between 2 and 8 degrees and not less than 12,5000 candelas for vertical angles between 1 and 2 degrees and between 8 and 10 degrees. The effective intensity of the other flashes may be not less than 15 percent for green and 40 percent for yellow of that for the white flashes. The white flash should have a definite double peak. The flash duration for each flash shall be between 75 and 300 milliseconds. Gaseous discharge beacons may use multi-flicks which appear as a single flash to obtain the flash duration. The flash rate shall be between 10 and 15 total sequences per minute or between 30 and 45 individual flashes per minute. The intervals between flashes shall be equal and steady.

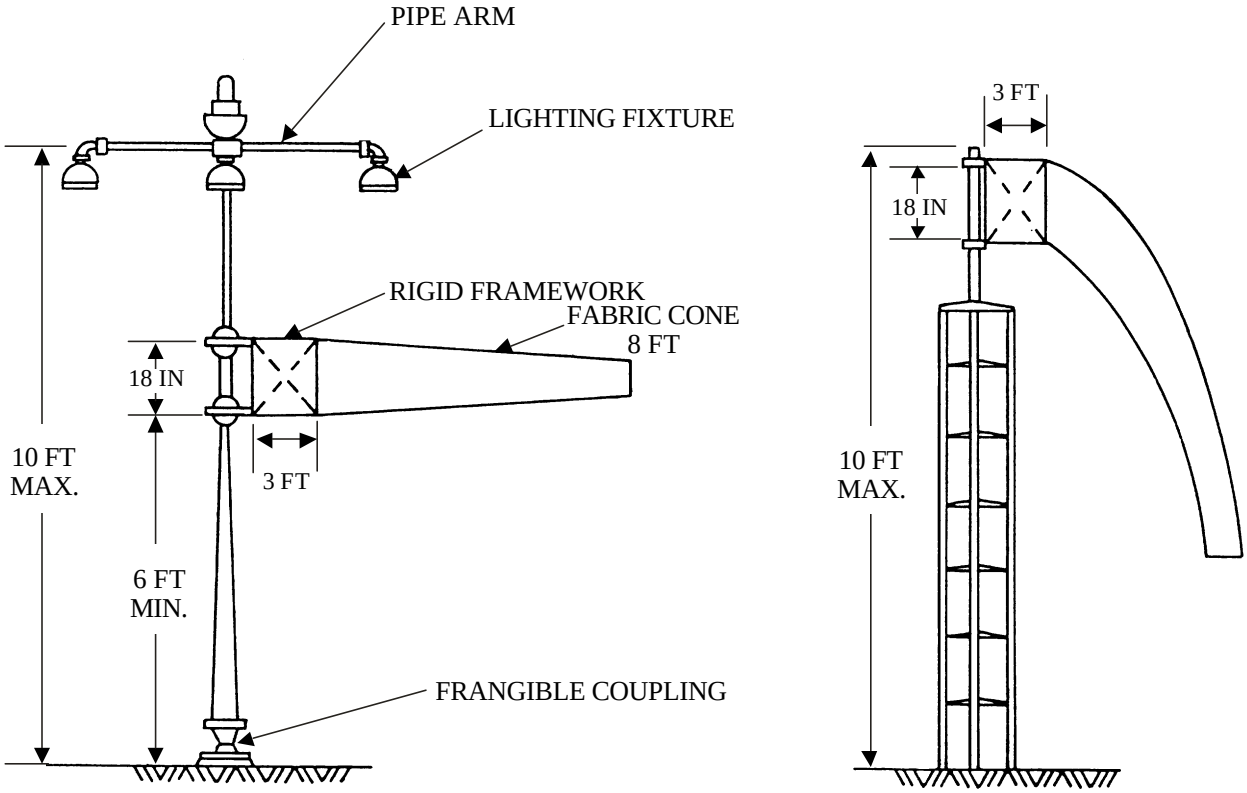

(DIMENSIONS ARE FOR REFERENCE ONLY)

STYLE II **STYLE I**

WIND CONE: FAA AC 150/5345-27, TYPE L-806, SIZE 1, STYLE I OR II

LAMPS: 120V, WATTS, NUMBER, AND TYPE AS DETERMINED BY MANUFACTURER

TRANSFORMER: 120V OUTPUT, COMMERCIAL, WATTS AS DETERMINED BY MANUFACTURER

Figure 2. Typical wind direction indicator, type FAA L-806

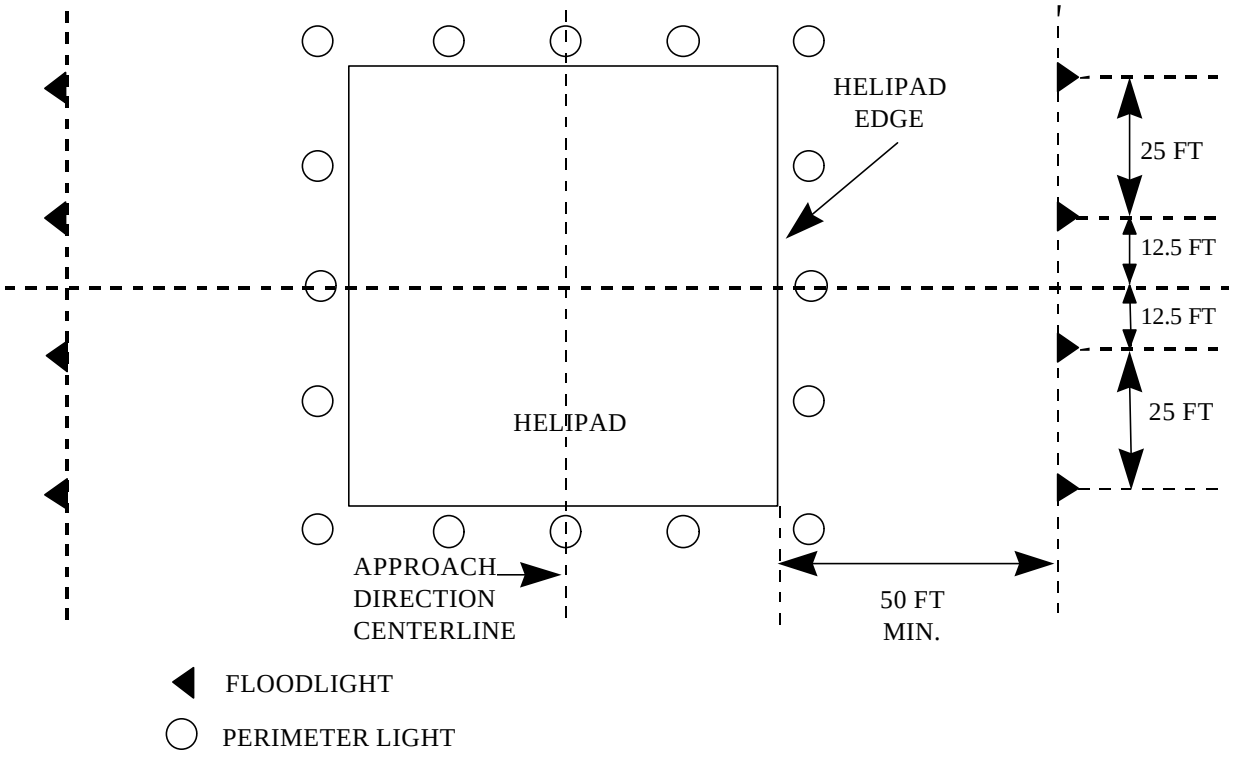

Figure 3. Typical layout of helipad floodlights

b. Wind direction indicators. The illumination of the fabric cone (sock) for lighted helipads shall be not less than two footcandles at any point along the top surface of the fully extended cone in any direction. The number and type of light units is optional. If the height of the unit exceeds the obstruction clearance planes, a double red obstruction light (WP003 10) shall be installed.

~~b.~~**c.** Helipad floodlights. The floodlights shall provide vertical illumination on the helipad surface that averages not less than two footcandles with the ratio of the average value to the darkest area not greater than 4:1. An average illumination of five footcandles is preferred. The obstruction lights on each fixture, if used, shall be aviation red with the intensity between 0.5 and 7.5 candelas for all azimuth directions and elevation angles above horizontal.

~~c.~~**d.** Descent-angle indicator. (Reserved).

19. POWER AND CONTROLS.

20. POWER.

The electrical power for the special helipad lights may be from 120-volt multiple circuits or a combination of 120-volt multiple circuits and 6.6-ampere series circuits (WP009 00). The required voltage or current at the fixture shall be as required by the manufacturer. The power for the heliport beacon and the wind direction indicator is usually 120- or 240-volts and shall be less than 600 volts. The total power for a heliport beacon should be between 2000 and 4500 watts. Power for a wind direction indicator is usually between 600 and 1000 watts. Emergency power is not required for special helipad lights but should be used if it is available.

TABLE 1. SCHEDULE OF SPECIAL HELIPAD LIGHTS EQUIPMENT

Purpose and Type of Fixture	Lamp Rating and Type	Isolation Transformer Rating and Type
Helipad beacon.		
FAA AC 150/ 5345-12, type L-801H class 2 Modified.	Three lamps, volts, watts, and type as determined by manufacturer.	Voltage, commercial, output voltage and rating as determined by manufacturer.
Wind direction indicator.		
FAA AC 150/ 5345-27, type L-806, style I or II, size 1.	120V, number, watts and type as determined by manufacturer.	120 volt output commercial, wattage as determined by manufacturer.
Helipad floodlights.		
(Reserved)		
Descent angle indicator lights.		
(Reserved)		

21. CONTROLS.

Controls for the heliport beacon, the wind direction indicator, and the helipad floodlights are ON-OFF switches only. These controls may be manual or automatic from photoelectric or time switches. The floodlights should have controls independent of other lights except the obstruction lights shall be lighted when the helipad perimeter lights or other obstruction lights are lighted. Except for the descent-angle indicator, intensity control is not required.

~~TECHNICAL MANUAL~~

~~HELICOPTER ELEVATED PLATFORMS~~

~~SHOREBASED~~

~~(To be provided)~~

TECHNICAL MANUAL

AUXILIARY LANDING FIELD LIGHTING AND MARKING

SHOREBASED AIRFIELDS

Reference Material

~~Paint, Traffic and Airfield Marking, Solvent Base ..... FED-TT-P-85~~
Introduction 002 00
~~Definitive Designs for Naval Shore Facilities ..... NAVFAC P-272~~
Airport Beacons 003 02
Wind Indicators 003 03
Obstruction Markings 003 09
Obstruction Lighting 003 10
Optical Landing Aids (OLA) 003 13
Runway Markings 004 01
Runway Threshold Lights 004 02
Runway End Lights 004 04
High-Intensity Runway Edge Lights (HIRL) 004 05
Runway Distance Markers (RDM) 004 09
Arresting Gear Markers and Markings 004 10
Taxiway Markings 005 01
Taxiway Edge Lights 005 02
Taxiway Guidance Signs 005 04
Holding Position Signs and Lights for Intersections with Runways 005 06
Colors FED-STD-595
Apron and Parking Area Markings 006 01
Apron and Parking Area Lighting 006 02
Wheels-up and Wave-off Lights 006 03
Simulated Aircraft Carrier Deck Lights and Markings 006 04
Electrical Power and Control for Visual Aids 009 00
Constant-Current Regulators 009 02
Isolation and Distribution Transformers 009 03
Airfield Lighting Control Panels 009 05
Design Drawings for Visual Air Navigation Facilities ..... UFC 3-535-02
~~Airfield Lighting ..... MIL-HDBK-1023/1~~
Beads (Glass Spheres), Retroreflective FED-TT-B-1325
Paint, Traffic and Airfield Marking, Water Emulsion Base FED-TT-P-1952
~~Panels, Airport Lighting, General Specification for ..... MIL-P-8944~~
Aeronautical Ground Light and Surface Marking Colors ..... ICAO, Annex 14, Vol. 1, App. 1
Marking of Paved Areas on Airports ..... FAA AC 150/5340-1
Specification for L-821 Panels for Remote Control of Lights ..... FAA AC 150/5345-3
Specification for Airport and Heliport Beacons ..... FAA AC 150/5345-12
Specification for Wind Cone Assemblies ..... FAA AC 150/5345-27
Specification for Taxiway and Runway Signs ..... FAA AC 150/5345-44
Specification for Runway and Taxiway Light Fixtures ..... FAA AC 150/5345-46
Isolation Transformers for Airport Lighting ..... FAA AC 150/5345-47
Standards for Specifying Construction of Airports ..... FAA AC 150/5370-10

Alphabetical Index

Subject **Page No.**

Auxiliary Landing Fields Visual Aids Requirements 3
Basic Or Nonprecision Instrument Runway Markings. 3
Controls 14
Description Of The Visual Aids. 3
Dimensions 7
Equipment 9
Existing Installations 2
Fixtures And Materials. 9
General Information. 2
Holding Position Markers 4
Installation Requirements 6
Installations 6
Justification Requirements. 2
Locations And Dimensions. 7
Materials 7
Methods Of Installation. 6
Nonprecision Instrument Runway Markings 4
Photometric Requirements. 9
Power. 14
Power And Controls 14
Purpose. 2
Related Facilities 3
Rotating Beacons. 4
Runway Edge Lights 4
Runway End Lights 4
Runway Markings 4
Schedule Of Visual Aids Equipment For Auxiliary Landing Fields 8
Taxiway Edge Lights. 4
Taxiway Markings 4
Taxiway Signs. 4
Threshold/Runway End Lights 4
Wind Indicators 4

Record of Applicable Technical Directives

None

1. GENERAL INFORMATION.

~~2.~~**1.** PURPOSE.

This Work Package (WP) contains the requirements for the visual aids for auxiliary landing fields. These airfields are used normally for pilot training and operate under Visual Flight Rules (VFR) or possibly nonprecision Instrument Flight Rules (IFR) (WP002 00). The lower performance visual aids should adequately provide the pilot with the visual guidance he needs and are more economical to install and maintain. Airfields with existing lighting and marking aids may continue to use and maintain those aids, but these requirements shall be used for new installations or for upgrading of existing installations.

~~3.~~**1.** JUSTIFICATION REQUIREMENTS.

Any Navy auxiliary landing field with one or more paved runways qualifies for the visual aids listed in table 1 for the operations authorized. If additional or higher performance visual aids are required for a particular airfield, the installation shall be in accordance with the requirements of the WP for that visual aid. This WP does not authorize installation of visual aids, but if approved, these requirements apply. When deviations from these requirements are necessary, the changes shall be authorized in accordance with the approval procedures of WP002 00.

~~4.~~1. RELATED FACILITIES.

The visual aids for auxiliary landing fields listed in table 1 are related to the standard visual aids. The WPs for the standard aids provide additional information that may be helpful in the design and installation of visual aids for the smaller airfields. The related facilities are as follows:

a. Runway markings (WP004 01),

~~b.~~a. Taxiway and holding position markings (WP005 01),

~~c.~~a. Wind indicators (WP003 03),

~~d.~~a. Airport beacons (WP003 02),

~~e.~~a. Runway edge lights (WP004 05),

~~f.~~a. Runway threshold/end lights (WP004 02/004 04),

~~g.~~a. Taxiway edge lights (WP005 02),

~~h.~~a. Taxiway signs and holding position markers (WP005 04/005 06).

Other visual aids which may be required for auxiliary landing fields and shall be in accordance with the standard requirements are:

a. Obstruction markings (WP003 09),

~~b.~~a. Obstruction lighting (WP003 10),

~~c.~~a. Optical landing aids (WP003 13),

~~d.~~a. Runway distance markers (WP004 09),

~~e.~~a. Arresting gear markers and markings (WP004 10),

~~f.~~a. Apron and parking area markings (WP006 01),

~~g.~~a. Apron and parking area lights (WP006 02),

~~h.~~a. Wheels-up and wave-off lights (WP006 03),

~~i.~~a. Simulated aircraft carrier deck lights and markings (WP006 04).

~~5.~~1. DESCRIPTION OF THE VISUAL AIDS.

6. The special visual aids for auxiliary landing fields should include only those visual aids required for the mission and authorized operations. The special visual aids applicable to these smaller airfields are described as follows:

~~7.~~1. BASIC OR NONPRECISION INSTRUMENT RUNWAY MARKINGS.

The runway markings consist of surface paint in the specified configuration on the runway pavement. The paint shall be an airfield marking type in aviation surface white. If the runway is for daytime operations only, the markings may be nonretroreflective, but if nighttime operations are involved, the markings should be retroreflective. For auxiliary airfields the runway markings shall be the basic runway or the nonprecision instrument runway markings (see figure 1). The basic runway markings consist of the centerline marking and the runway designation marking numerals. The nonprecision instrument runway markings consist of the centerline marking, designation marking, and threshold

TABLE 1. AUXILIARY LANDING FIELDS VISUAL AIDS REQUIREMENTS

Type of Visual Aid	Type of Operations Authorized			
	D-V	D-I	N-V	N-I
1. Runway markings, basic	R	R	R	R
2. Runway markings, nonprecision instrument	OPT	R	OPT	R
3. Taxiway markings	R	R	R	R
4. Holding position markings	R	R	R	R
5. Wind indicator, unlighted	R	R	NR	NR
6. Wind indicator, lighted	NR	NR	R	R
7. Rotating beacon	NR	OPT	R	R
8. Runway edge lights	NR	OPT	R	R
9. Threshold/runway end lights	NR	OPT	R	R
10. Taxiway edge lights	NR	NR	R	R
11. Taxiway signs	OPT	OPT	OPT	OPT

D-V = Daytime VFR
D-I = Daytime IFR
N-V = Nighttime VFR
N-I = Nighttime IFR

R = Required
NR = Not Required
OPT = Optional

markings. The details for these marking configurations are given below and in WP004 01.

~~8.~~1. TAXIWAY MARKINGS.

The taxiway markings shall consist of aviation surface yellow paint. These markings may be nonretroreflective for airfields with daytime operations only but should be retroreflective for airfields with nighttime operation. The taxiway markings shall consist of the centerline marking and the holding position markings (see figure 1). The holding position markings shall consist of two solid lines and two dashed lines across the taxiway. The configuration and details for taxiway markings are given below and in WP005 01.

~~9.~~1. ROTATING BEACONS.

The airport rotating beacon shall be installed only at airfields equipped for nighttime operations and shall be a medium-intensity rotating beacon. The emitted light shall appear as alternating flashes of white and green light. The white beam should be a split-beam optically or a double beam utilizing two lamps with the axes of the beams not more than 15 degrees apart. The beacon installation shall be similar to that of the airfield rotating beacon in WP003 02 except for the type of beacon used.

~~10.~~1. WIND INDICATORS.

Each airfield shall be provided with one or more wind indicators. For auxiliary landing fields the wind indicator shall be an 8-foot wind cone. The cone (sock) shall be orange or white in color to provide a good contrast with the background when observed from an altitude of 1000 feet. The wind indicator shall be lighted for nighttime operations. For runways more than 6000 feet in length, two wind indicators may be installed. The wind indicator installation shall be similar to that of a centrally located wind cone of WP003 03, except 8-foot wind cones are used.

~~11.~~1. RUNWAY EDGE LIGHTS.

Each runway used for nighttime operations shall be provided with runway edge lights. The runway edge lights for auxiliary landing fields shall be a row of white lights along each edge of the runway. The lights shall be elevated high-intensity bidirectional series type lights. The configuration for the runway lights shall be a shown in figure 2. The runway edge light installation shall be similar to the runway edge lights of WP004 05 except that lights which should be located in paved areas may be omitted instead of using semiflush lights.

~~12.~~1. THRESHOLD/RUNWAY END LIGHTS.

Each runway used for nighttime operations shall be provided with a line of not less than eight threshold/runway end lights along each end of the runway. These lights shall be high-intensity elevated lights emitting green beams and red beams in opposite directions. The green beams directed towards the approach area are the threshold lights and the red beams directed along the runway are the runway end lights. The configuration for these lights shall be as shown in figure 2. The installations shall be similar to the threshold lights of WP004 02 and the runway end lights of WP004 04, except for the number of lights used.

~~13.~~1. TAXIWAY EDGE LIGHTS.

Each taxiway used for nighttime operations shall be provided with taxiway edge lights. These lights shall be elevated, omnidirectional, blue lights located along each edge of the taxiway as shown in figure 2. These lights and configuration shall be similar to the taxiway edge lights of WP005 02 except the spacing of lights may be greater.

~~14.~~1. TAXIWAY SIGNS.

Most auxiliary landing fields do not require taxiway signs; however, some airfields may require signs for improved taxiing guidance. Two types of taxiway signs, mandatory and informational, may be used. The mandatory signs have white legends on red backgrounds, for example, to mark holding positions. If any holding position uses mandatory signs, all holding positions should be provided with these signs. The information signs have black legends on yellow backgrounds and may be used for directions and identification of locations that need improved guidance. The taxiway signs and installations are similar to the taxiway guidance signs (WP005 04) and holding position markers (WP005 06).

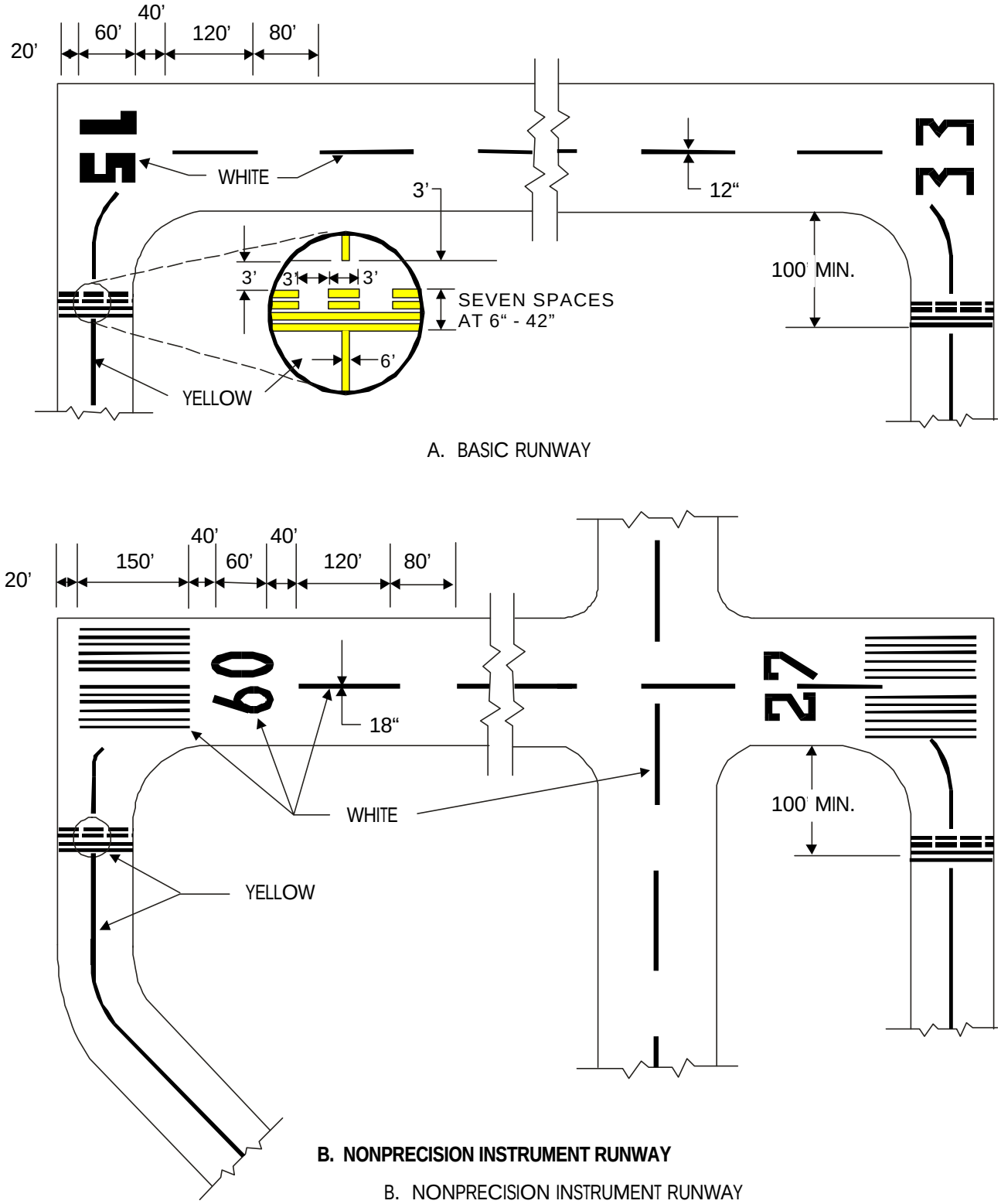

Figure 1. Typical configurations for runway and taxiway markings for auxiliary landing fields

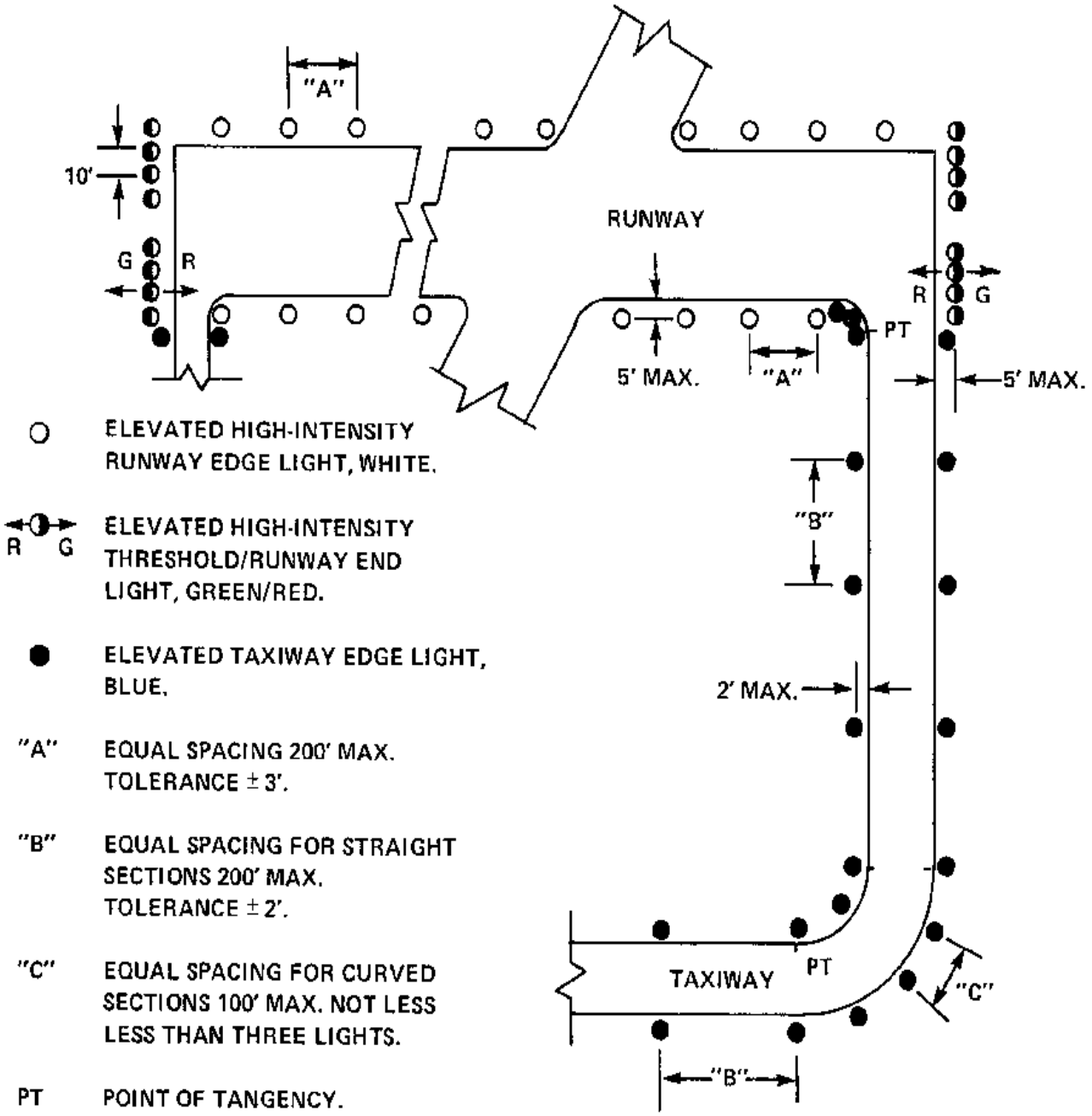

Figure 2. Typical configuration for runway and taxiway lights for auxiliary landing fields

~~15.~~**1.** INSTALLATIONS.

~~16.~~**1.** INSTALLATION REQUIREMENTS.

The installation requirements for these lights and markings varies with the type of visual aids being installed. For installation details for auxiliary landing field visual aids refer to ~~MIL-HDBK-1023/1 and NAVFAC P-272~~**UFC 3-535-02**. For more details on airfield markings refer to WP004 01, WP005 01, WP006 01, and WP007 01 and FAA AC 150/5340-1 and AC 150/5370-10. For runway lights refer to WP004 02, WP004 04, and WP004 05. For taxiway lights and signs refer to WP005 02, WP005 04, and WP005 06. For information on airfield beacons and wind indicators refer to WP003 02 and WP003 03.

General design and installations details for visual aids for auxiliary landing fields are given below.

~~17.~~**1.** METHODS OF INSTALLATION.

The method of installation varies with the type of visual aid; however, more economical methods are used than may be used for some standard installations. The methods used for the various aids and differences in methods from the standard installations are as follows:

a. Runway and taxiway markings. These markings shall be applied to the pavement by an approved method that is suitable for the type of paint being used. If the runways and taxiways are intended for use at night, the retroreflective beads (spheres) should be installed with the paint. Regulations of some states, such as California, or other authorities may prohibit or restrict the use of solvent base paints. For white and yellow markings, ~~this may require using~~**use** type TT-P-1952~~ instead of type TT-P-85 paint~~. ~~For the~~ Slower drying type TT-P-1952 paint, timing of application of the retroreflective beads (spheres) may be required to assure adherence of the beads without sinking too deeply into the paint.

~~b.~~**a.** Runway and taxiway lights. These lights may be stake-mounted or mounted on bases or conduit set in concrete and the series circuit cable may be installed by direct burial. These elevated lights shall be mounted on frangible couplings.

~~c.~~**a.** Taxiway signs. Taxiway signs, if used, shall be installed in accordance with the requirements of WP005 04.

~~d.~~**a.** Rotating beacon. The airfield rotating beacon shall be located and installed as in WP003 02 except for the type of beacon. The lamps of the beacon shall be aimed in opposite directions with the axes of the beams aimed 5 degrees above the horizontal.

~~e.~~**a.** Wind indicator. The wind indicators should be centrally located on the airfield and shall be located and installed as required in WP003 03.

~~18.~~**1.** LOCATIONS AND DIMENSIONS.

The location and dimensions for these visual aids vary and shall follow the requirements of the associated standard WP, except for the special requirements or variations cited in this WP. The location and dimension variations are as follows:

a. Runway markings. The width of the centerline marking shall be 12 inches for a basic runway and 18 inches for a nonprecision instrument runway.

~~b.~~**a.** Taxiway markings. The taxiway markings shall be standard centerline and holding position markings (WP005 01). The holding position marking may be not less than 100 feet from the runway edge.

~~c.~~**a.** Runway edge lights. The locations of runway edge lights shall be as in WP004 05 except the spacing between lights may be 200 ±2 feet, the lines of lights shall be not more than 5 feet from the runway edges with a tolerance for individual lights of ±6 inches from the line. If a light position is in a paved area, the light may be omitted. A light on one side only of the runway is permitted at intersections with other runways or taxiways. The lights shall be aligned in azimuth with the axes of the beams equally toed-in toward the runway centerline.

~~d.~~**a.** Threshold/runway end lights. The locations of the threshold/runway end lights shall be in a line at each end of the runway perpendicular to the runway centerline. At each end the lights shall be in two groups with the outermost light of each group in line with the runway edge lights. Each group shall have not less than four lights spaced at intervals of 10 ±1 feet. The lines of lights shall be not more than 5 feet from the runway end, and individual lights shall be not more than 6 inches from the line. The axis of each beam shall be approximately parallel to the runway centerline with the green towards the approach area and red towards the runway.

~~e.~~**a.** Taxiway edge lights. The location of the taxiway edge lights shall meet the requirements of WP005 02 except the spacing intervals for straight sections shall not exceed 200 feet and the spacing on curves shall not exceed 100 feet with not less than three lights on any arc greater than 15 degrees. The additional transition lights in each spacing section may be omitted. The tolerance for spacing light is ±2 feet.

~~f.~~**a.** Taxiway signs. The signs and holding position markers shall be located as required in WP005 04 and WP005 06, except the holding position markers may be not less than 100 feet from the runway edge.

~~g.~~**a.** Rotating beacon. The rotating beacon shall be located as required in WP003 02.

~~h.~~**a.** Wind indicator. The wind indicator shall be located as required in WP003 03 for 8-foot wind cones, except a single wind cone should be near the center of the airfield.

TABLE 2. SCHEDULE OF VISUAL AIDS EQUIPMENT FOR AUXILIARY LANDING FIELDS

Purpose and Type of Fixture	Lamp Rating and Type	Isolation Transformer	
		Rating	FAA Type AC150/5345-47
Runway edge lights, white, elevated, bidirectional, base or stake mounted.			
FAA AC 150/ 5345-46, type L-862 mode 1	120W 6.6A, type as determined by manufacturer.	200W 6.6/6.6A	L-830-6
Threshold/runway end, light, green/red, elevated, bidirectional, base or stake mounted.			
FAA AC 150/ 5345-46, type L-862E	120W 6.6A, type as determined by manufacturer.	200W 6.6/6.6A	L-830-6
Taxiway edge light, blue elevated, omnidirectional, stake mounted.			
FAA AC 150/ 5345-46, type L-861T mode 1	45W 6.6A, type as determined by manufacturer.	30/45W, 6.6/6.6A	L-830-1
Taxiway signs, informational, black legend on yellow background.			
FAA AC 150/5345-44, type L-858Y, size 2, style 3	As determined by manufacturer.	As determined by manufacturer.	
Taxiways signs, mandatory, for holding positions, white legend on red background.			
FAA AC 150/5345-44, type L-858R size 2, style 3	As determined by manufacturer.	As determined by manufacturer.	
Rotating beacon, split white/green.			
FAA AC 150/5345-12, type L-801A (modified)	120V, type as determined by manufacturer.	Not required.	
Wind indicator, wind cone (sock).			
FAA AC 150/5345-27, type L-806, size 3, style I or II.	As determined by manufacturer.	Not required.	

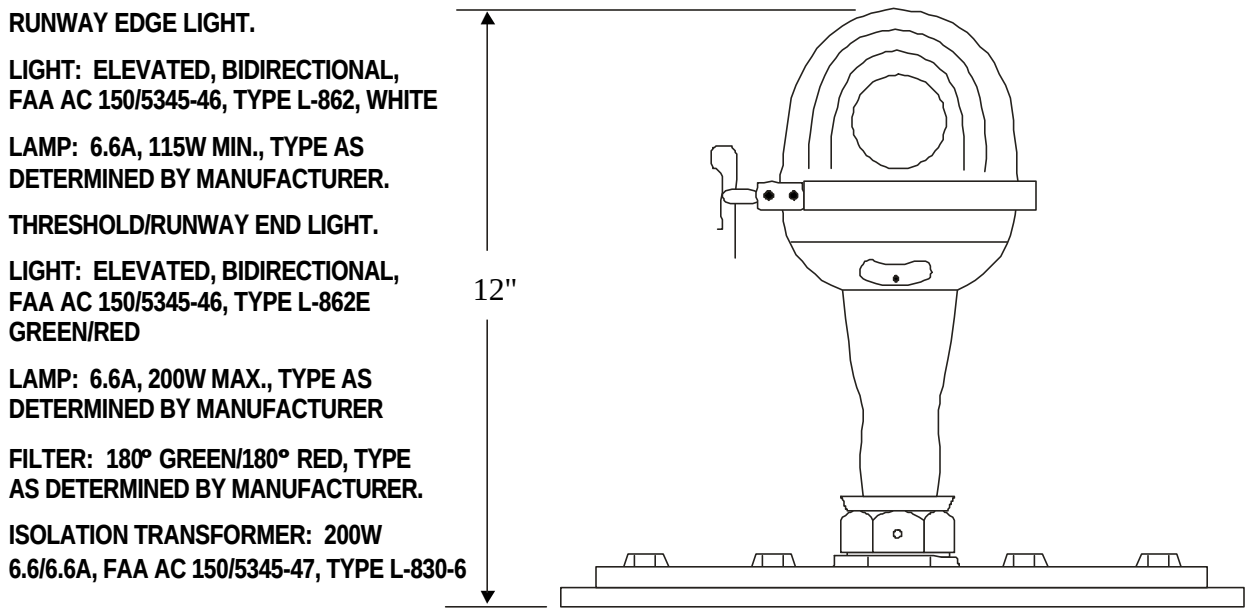

Figure 3. Typical runway edge and threshold/runway end light for auxiliary landing fields

For all runway and taxiway lights the maximum height of the lights shall be not more than 14 inches above the edge of the pavement except in areas with frequent accumulations of snow to depths of 12 inches or more and with approval by Naval Air Systems Command the lights may be not more than 24 inches above the edge of the pavement.

~~19.~~**1.** EQUIPMENT.

~~20.~~**1.** FIXTURES AND MATERIALS.

The paint for marking the runways and taxiways shall be in accordance with ~~FED TT-P-85 or~~ FED TT-P-1952, see paragraph 17a of this WP for restrictions, and the colors of the markings shall be in accordance with FED-STD-595. If retroreflective markings are required, the glass spheres shall be in accordance with FED TT-B-1325, type III, gradation A. The lighting fixtures are elevated lights. These lights and equipment are listed in table 2. Typical examples of light fixtures are shown in figures 3 through 7.

~~21.~~**1.** PHOTOMETRIC REQUIREMENTS.

The color of the light emitted shall be in accordance with ICAO, Annex 14, Vol. 1, App. 1. The photometric requirements of each type of visual aid shall be as follows:

a. Runway and taxiway markings. These markings shall be uniformly painted. The aviation white runway markings shall match color chip No. 27875, and the aviation yellow taxiway markings shall match color chip No. 23538 of FED-STD-595. The markings should be retroreflective if used for operations at night.

~~b.~~**a.** Runway edge lights. The runway edge lights shall be bidirectional, aviation white lights with intensity control. The intensity of each beam at rated current shall not be less than 10,000 candelas average for beam width of 11 degrees and for elevation angles between 0 and 7 degrees. The minimum intensity at rated current through 360 degrees in azimuth to 15 degrees above horizontal shall be not less than 50 candelas.

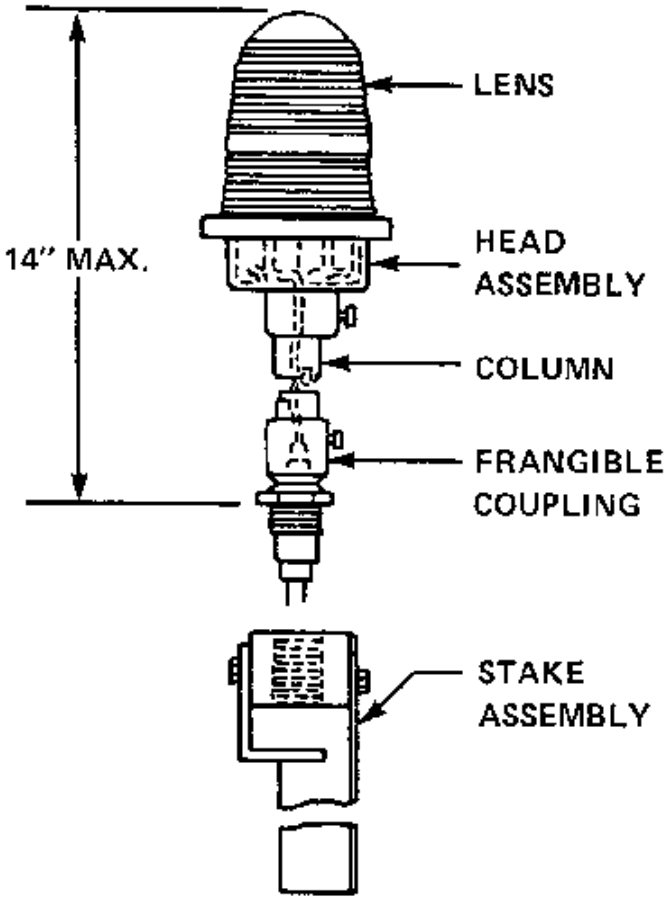

LIGHT: ELEVATED, 45W 6.6A FAA AC 150/5345-46, OMNIDIRECTIONAL, TYPE L-861T TAXIWAY EDGE LIGHT, BLUE

LAMP: 45W 6.6A, TYPE AS DETERMINED BY MANUFACTURER

ISOLATION TRANSFORMER: 30-45W 6.6/6.6A, FAA AC 150/5345-47, TYPE L-830-1

MOUNTING: ON FRANGIBLE COUPLINGS, MAY BE STAKE MOUNTED

COLOR: ACCORDING TO ICAO, Annex 14, Vol. 1, App. 1

Figure 4. Typical examples of taxiway lights for auxiliary landing fields

SIGNS: MANDATORY
FAA AC 150/5345-44
TYPE L-858R, SIZE 2,
3, OR 5, STYLE 2 OR
3, CLASS 1 OR 2,
LEGENDS AS REQUIRED.

LAMPS: RATING AND
TYPE AS DETERMINED
BY MANUFACTURER.

ISOLATION TRANSFORMERS:
6.6/6.6A, WATTS AND
NUMBER AS DETERMINED
BY MANUFACTURER.

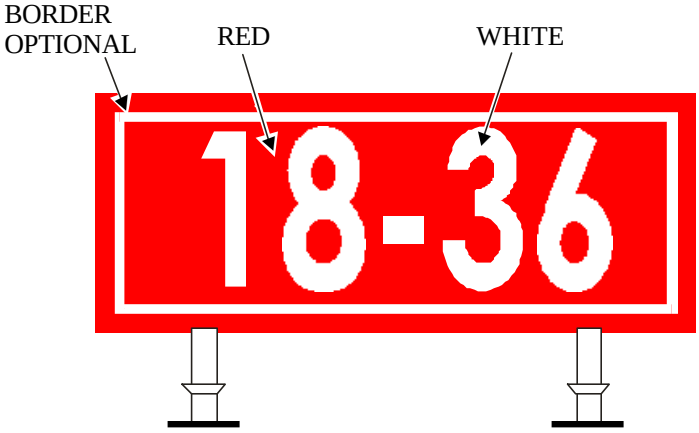

MANDATORY SIGN

(HOLDING POSITION MARKER)

SIGNS: INFORMATIONAL,
FAA AC 150/5345-44,
TYPE L-858Y, SIZE 2,
3, OR 5, STYLE 2 OR
3, CLASS 1 OR 2,
LEGENDS AS REQUIRED.

LAMPS: RATING AND
TYPE AS DETERMINED
BY MANUFACTURER.

ISOLATION TRANSFORMERS:
6.6/6.6A, WATTS AND
NUMBER AS DETERMINED
BY MANUFACTURER.

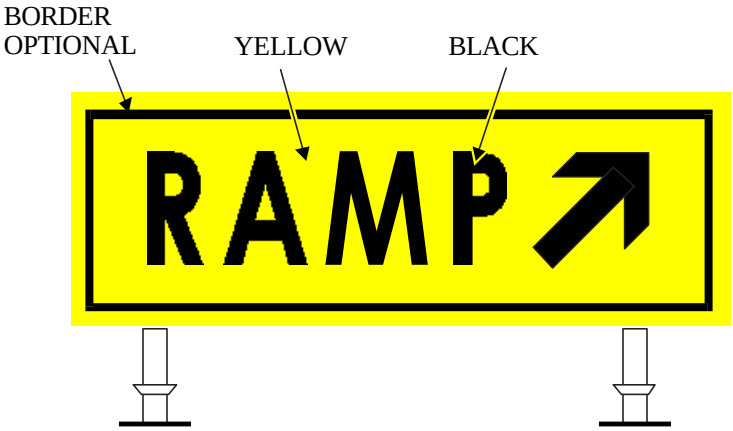

INFORMATIONAL (DESTINATION) SIGN

Figure 5. Typical taxiway signs for auxiliary landing fields

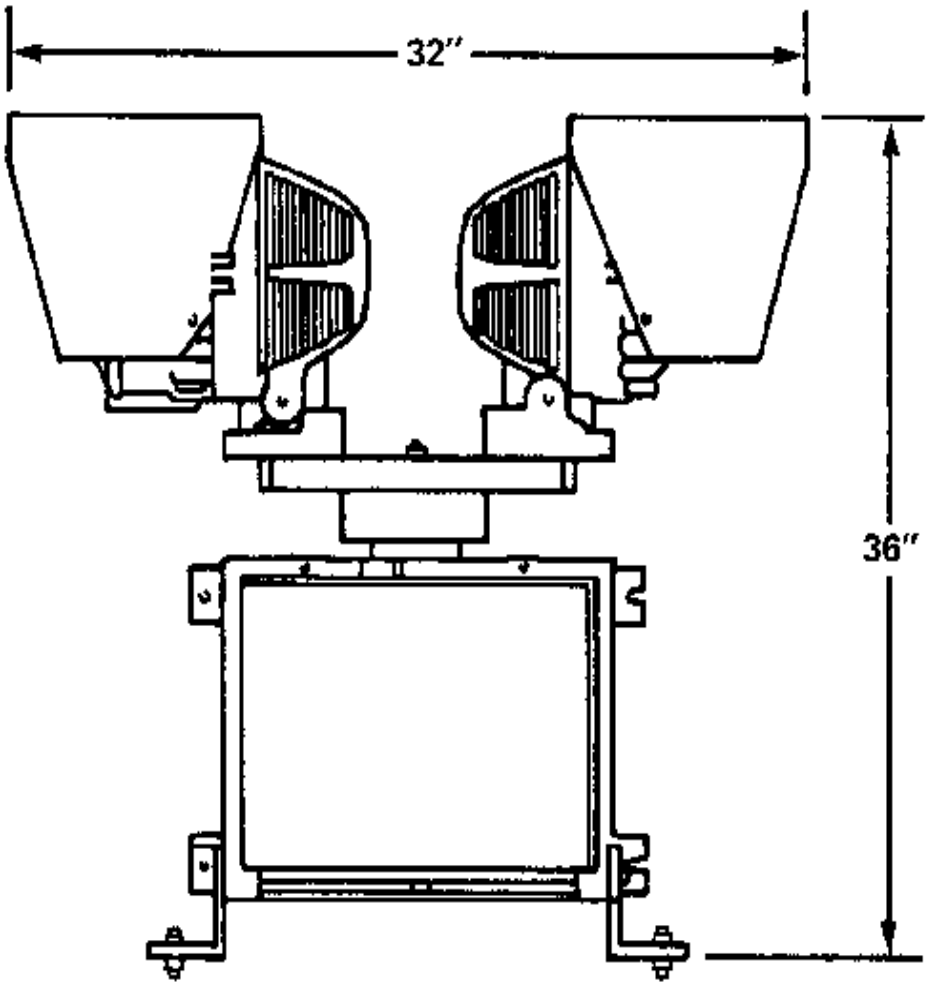

DIMENSIONS ARE FOR REFERENCE ONLY

ROTATING BEACON:
FAA AC 150/5345-12, TYPE L-801A,
(MODIFIED), 1 BEAM WHITE,
DOUBLE-PEAKED, 1 BEAM GREEN,
FLASH RATE: 24 TO 30 FLASHES
PER MINUTE, 120 VAC 60 HZ.

LAMPS: TWO, 1000W MAX. 120V.

COLORS: ACCORDING TO ICAO, Annex 14, Vol. 1, App. 1

Figure 6. Typical rotating beacon for auxiliary landing fields

a. Threshold/runway end lights. These lights shall be bidirectional with 180 degrees green and 180 degrees red with intensity control. The intensity of the green beam at rated current shall be not less than 4,000 candelas average for a beamspread of 11 degrees in azimuth and 0 to 7 degrees vertically. The intensity of the red beam shall be not less than 2,500 candelas average for a beamspread of 12 degrees in azimuth and up to 4.5 degrees vertically.

~~b.~~**a.** Taxiway signs. The faces of the signs shall be uniform in color and illumination over the surface of the legend and of the background. If unlighted the surface colors shall match the color chips as follows: red No. 21105, yellow No. 23538, black No. 27038, and white No. 27875. The emitted colors when lighted shall be aviation white, aviation red, or aviation yellow. When lighted at night the signs shall be recognized at not less than 800 feet and legible at 500 feet.

~~c.~~**a.** Rotating beacons. The emitted light from the beacon shall appear as alternating flashes of aviation white and aviation green. The white beam shall be a split or double peak. The flash rate shall be 12 to 15 flashes of each color per minute. The flash duration shall be between 75 and 300 milliseconds. The minimum effective intensity of the white beam shall be not less than 50,000 candelas for elevation angles between 2 and 8 degrees and not less than 25,000 candelas for elevation angles between 1 and 10 degrees. The effective intensity of the green light shall be not less than 10,000 candelas and 5,000 candelas for the corresponding elevation angles.

~~d.~~**a.** Wind indicator. The color of the wind socks shall be color chip No. 12197 for orange and color chip No. 27875 for white. When lighted at night, the illumination on any point of a horizontal plane described by the complete rotation of the upper surface of a fully extended cone shall be not less than 2 footcandles.

~~22.~~1. POWER AND CONTROLS.

~~23.~~1. POWER.

The electrical power for the visual aids for outlying and utility airfields shall be provided by one or more 6.6-ampere series circuits (WP009 00) for the runway and taxiway lights and by 120-volt circuits for the rotating beacons and wind indicators. The runway edge lights and threshold/runway end lights shall be on one circuit, and the taxiway edge lights and signs on one circuit. The series circuits shall be energized by one or more constant-current regulators with a rated output current of 6.6-amperes and not less than three intensity settings (WP009 02). The lowest intensity setting shall produce an intensity not more than 10 percent of intensity at rated current. These lights shall be connected to the primary series circuit by individual 6.6/6.6-ampere isolation transformers (WP009 03). The 120-volt multiple circuit power for the beacon and wind indicator may come from the lighting vault or other more convenient source. The load for a wind indication is less than 1000 watts and for a beacon is less than 4000

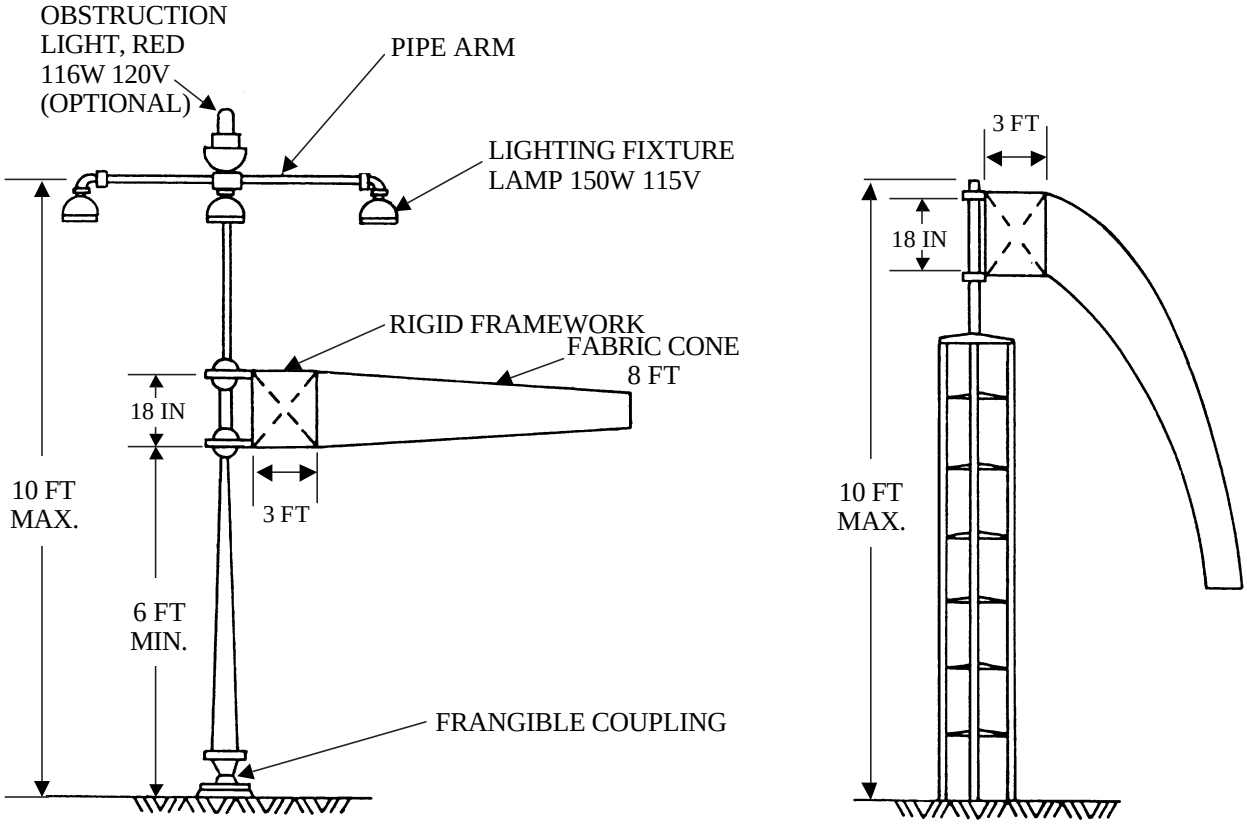

A. WIND INDICATOR
8-FOOT WIND CONE
LIGHTED
LOW-MASS DESIGN
STRUCTURE
FAA AC 150/5345-27
TYPE L-806 STYLE I
SIZE 1

B. WIND INDICATOR
8-FOOT WIND CONE
UNLIGHTED
LIGHTWEIGHT
STRUCTURE
FAA AC 150/5345-27
TYPE L-806 STYLE II
SIZE 1

(DIMENSIONS ARE FOR REFERENCE ONLY)

Figure 7. Typical wind indicators for auxiliary landing fields

watts. Emergency power for these aids is not required but should be used if available.

~~2~~4.1. CONTROLS.

Remote control of these visual aids from an air traffic control tower or other central location that is manned when the airfield is in operation is preferred. However, control from other locations such as the lighting vault is acceptable. The control panel should be a simple type of ~~MIL-P-8944 or~~ FAA AC 150/5345-3, type L-821 (WP009 05). The control panel should provide for runway selection if more than one runway is lighted and switching ON-OFF of runway lights, taxiway lights, rotating beacon, wind indicator, obstruction lights, and other visual aids. A 5-setting intensity control for the runway lights and at least two intensity steps for the taxiway lights should be provided. If power for the rotating beacon and wind indicators is not furnished by circuits from the lighting vault, automatic photoelectric controls may be used.

TECHNICAL MANUAL

ELECTRICAL POWER AND CONTROL FOR VISUAL AIDS

SHOREBASED AIRFIELDS

Reference Material

~~Definitive Designs for Naval Shore Facilities ..... NAVFAC P-272~~
Auxiliary Power and Power Transfer Equipment 009 01
Constant-Current Regulators 009 02
Isolation and Distribution Transformers 009 03
Special Power Supplies 009 04
Airfield Lighting Control Panels 009 05
Special Remote Control Equipment 009 06
Design Drawings for Visual Air Navigation Facilities ..... UFC 3-535-02
~~Airfield Lighting ..... MIL-HDBK-1023/1~~
Specification for L-824 Underground Electrical Cable for Airport Lighting Circuits ..... FAA AC 150/5345-7
Specification for L-823 Plug and Receptacle, Cable Connectors ..... FAA AC 150/5345-26
Specification for L-854, Radio Control Equipment ..... FAA AC 150/5345-49

Alphabetical Index

Subject **Page No.**
Associated Components 2
Cables 4
Cable Installations 5
Control Circuits 4
Counterpoises. 5
Description 2
General Information. 2
Ground-to-Ground Radio Control 4
Grounding. 5
Installations 5
Lightning Arrestors 5
Lightning Protection. 5
Multiple Circuits. 2
Power Circuits. 2
Power Sources. 4
Purpose. 2
Radio Control 4
Scope 2
Selection Of Power And Control Equipment. 2
Series Circuits. 2
Vaults. 6

Record of Applicable Technical Directives

None

1. GENERAL INFORMATION.

2. PURPOSE.

Most airfield visual aids, except for markings, are supplied with electrical power and provided with operating and intensity controls. This Work Package (WP) discusses the general design requirements for providing power and operating control for the visual aids. For details of the design and installation of the visual aids refer to ~~MIL-HDBK-1023/1 and NAVFAC P-272~~**UFC 3-535-02**.

3. SCOPE.

The information provided by this WP is concerned with the special requirements for designing the power and control circuits and is intended only as a guide. The visual aids operate in an environment requiring high reliability and accurate performance. The lights and equipment must be a minimum hazard to operating aircraft. The power and control equipment have been specially developed to provide the performance and reliability required, but proper design and installation practices must be followed to obtain the full capability of each visual aid.

4. SELECTION OF POWER AND CONTROL EQUIPMENT.

In designing the installation of airfield visual aids, the equipment usually is expected to operate for 20 years or longer in a hostile environment. The power and control equipment must reliably interface the power correctly between the voltage, current, and frequency required by the visual aids. The equipment should be selected to allow for some expansion in the load.

5. ASSOCIATED COMPONENTS.

Major items of power and control equipment are discussed in separate WPs. This additional information should be helpful in making the selection of equipment. The WPs are as follows:

a. WP009 01 Auxiliary Power and Power Transfer Equipment,

b. WP009 02 Constant-Current Regulators,

c. WP009 03 Isolation and Distribution Transformers,

d. WP009 04 Special Power Supplies,

e. WP009 05 Airfield Lighting Control Panels,

f. WP009 06 Special Remote Control Equipment.

6. DESCRIPTION.

7. POWER CIRCUITS.

The visual aid may be a single light such as a beacon, many runway lights, or a combination of aids such as taxiway lights and signs. The cables for these circuits are installed underground except at the connections to the lights. Power for most of these aids is provided by series circuits, but multiple circuits are used for some aids. A block diagram of the power circuits for the visual aids is shown in figure 1.

8. Series Circuits.

A series circuit consists of a single-conductor cable from a regulator to each light in succession and returning to the regulator. The same current flows through each light, and all lights in the circuit are at the same selected intensity. The power for the series circuits is controlled by constant-current regulators. The rated current from the regulators and the primary circuit current is either 6.6 or 20 amperes depending on the type of light used in the circuit. Most regulators can also operate at reduced current to lower the intensity of the lights. The lights are not connected directly in the primary circuit but are connected to the circuit by individual isolation transformers.

9. Multiple Circuits.

Some airfield visual aids are supplied power by multiple circuits in which the lights are connected between two conductors from a voltage source. Because of voltage drop in the conductors, each light farther from the voltage source will have a slightly lower current and a lower intensity. For some visual aids involving only a few lights especially with less critical intensity requirements and beamspreads, multiple circuits may be acceptable and more practical. Some applications are the beacon, wind indicator lights, obstruction lights, sequence flashing lights, floodlights, optical landing systems, and medium-intensity approach lights. The circuit usually is energized at 120 or 240 volts AC. Other circuit voltages may be used and adjusted to the rated voltage of the lights by distribution transformers. Intensity control may be provided.

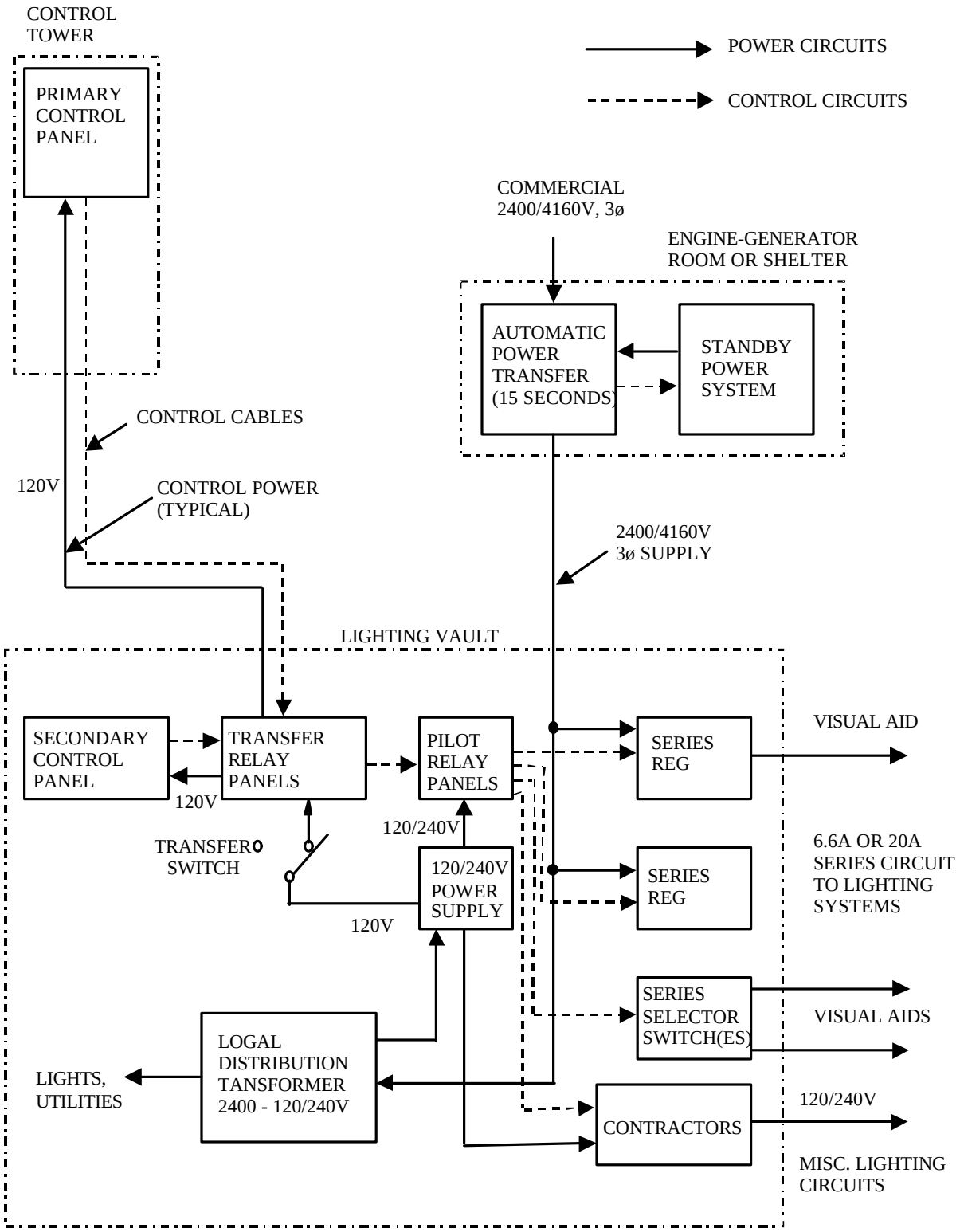

Figure 1. Typical power and control systems block diagram

10. Power Sources.

The primary source of power for airfield visual aids is usually commercial power although some airfields may have their own primary generating plants. For Navy airfields, this primary power is usually distributed at 2400/4160 volts, three phase, 60 hertz, but other voltages may be available. Distribution voltages may be adjusted with step-down or step-up distribution transformers to that required by the regulators or other equipment. For Navy installations the distribution voltage into the lighting vault is usually 2400/4160 volts or 2400 volts single phase; however, it may be desirable to reduce this voltage to 120/240 volts because 240-volt-input regulators may be more economical. Most airfields require one or more auxiliary or standby power sources for the visual aids in case of failure of the primary source of power. The auxiliary power source is usually an engine-generator set located at the lighting vault. The kilowatt capacity of this engine-generators should be enough to handle the entire power load of the vault or the load of the critical visual aids. A new engine-generator should have enough capacity for about 20 percent expansion in load. For the local engine-generator set or standby power source, a power transfer switching arrangement is required. Most airfields require that this power transfer be completed automatically in 15 seconds or less. This transfer time includes the time to start the engine-generator and bring it up to speed to accept the load. For Category II or III airfields the transfer of power shall be completed in one second. For engine-generator auxiliary power sources this transfer time is usually accomplished by using the auxiliary power as the operating source during the period of Category II or lower visibility conditions and transferring to the primary source in case of auxiliary power failure.

11. CONTROL CIRCUITS.

The operation of most airfield visual aids are remotely controlled from the air traffic control tower. This requires control circuits between the control tower and lighting vault or power equipment stations (see figure 1). Military airfields have a second remote control point usually in the entrance to the lighting vault. The constant-current regulators and most other power equipment have manual controls at the individual units which is used for maintenance and has precedence over the remote controls. Except for the wave-off lights only one remote control point shall be able to operate the aids at a given time. Hence a control transfer switch and transfer relay panels, usually located in the vault, are required. The control usually is transferred to the control tower but may be retained at the vault during maintenance or emergency operations. The control circuits consist of the lighting control panels, transfer switch and transfer panels, pilot relay panels for longer lengths of control cables, the control cables, circuit selector switches, and auxiliary control equipment. The control circuits for Navy airfields are usually operated by 120 volts, AC. This type of control uses readily available power and provides reliability for circuits up to a few thousand feet in length. Control circuits more than 3500 feet in length shall use pilot relay panels with the low-current relays to isolate the operating controls from the control circuits. With pilot relay panels the control circuits may be 7500 feet long. For longer control circuits or for new control systems, the use of 48 volts, DC type controls should be considered. The use of vinyl or plastic insulation for small telephone type control wires has reduced many of the earlier problems of low voltage control systems with underground control cables. Some visual aids systems or units may be located where it is not practical to install control cables. One option is to use ground-to-ground radio control from a transmitter at the air traffic control tower to a receiver at the power source for the visual aid. The requirements for the radio control systems are included in FAA AC 150/5345-49, L-854, type II, but there are no approved sources. Some radio manufacturers may have acceptable equipment on a commercial procurements. Another option may be to use telephone circuit between the control tower and the visual aids installation. For some visual aids, local automatic controls such as photoelectric controls and time switches, may be practical.

12. CABLES.

A major item for both power and control circuits is the cables. Most of the cables for visual aids are installed underground and must be a type suitable for direct burial and exposure above the ground. Only a few types of cables are considered suitable for the hostile environment of airfield visual aids installations. The cables are connected to other equipment or to other lengths of cable requiring connections. Whenever possible, either factory or field attached connectors in accordance with FAA AC 150/5345-26, Specification L-823 should be used. Wrapped splices shall be avoided. The environment for these cables may include water, oil, fuels, de-icing fluids, many types of soil, ozone, ultra-violet radiation, microorganisms, fungus, rodents, and physical abuse. The more frequent causes of problems with cables are water, physical damage, and lightning. The approved types of cable for the frequently used circuits are as follows:

a. Series circuits. For primary circuits the cable shall be single-conductor 5000-volt, No. 8AWG, stranded, having cross-linked polyethylene insulation. This cable is in accordance with FAA AC 150/5345-7, Specification L-824 type B or C. Secondary cables shall be two-conductor 600 volt, No. 12 AWG, stranded, FAA L-824, preferably type C. The connectors shall be FAA type L-823 as required. Cable to be installed in saw kerfs in pavement may be single-conductor, 600-volt No. 10 AWG or larger, stranded, type THWN.

b. Multiple circuits. The preferred cable for multiple circuits shall be single- or two-conductor, 600 volt, No. 12 AWG or larger, FAA L-824 type A, B, or C. FAA L-823 connectors should be used.

c. Control circuits. The cables for the control circuits between tower and vault should be multi-conductor, 600 volt, No. 12 AWG, with insulation suitable for wet locations. Several of these cables may be required. Two-conductor cable of similar type may be used for single function control circuits. Splices and connectors shall be avoided. The 48 VDC controls may use larger numbers of multiconductor, stranded No. 19 AWG conductors with 300 volt polyvinyl insulation.

d. Counterpoise. The wire for the counterpoise shall be a single, bare, copper, ~~No. 6 or~~ No. 4 AWG, stranded conductor. The connections shall be exothermic welds or brazed.

13. INSTALLATIONS.

14. CABLES.

All primary circuit cables shall be installed underground. The preferred installation of lighting and control cables is in duct or conduit. For some auxiliary fields, temporary installation, and short runs of less important aids, direct burial of cable may be used. Under paved areas the ducts shall be encased in concrete or be of rigid steel conduit. The depth of the cable or ducts shall be not less than 18 inches, but 24 inches is preferred. Cables for runway centerline lights, touchdown zone lights, and taxiway centerline lights in existing pavements may be installed in saw kerfs preferably in metal conduit. Wrapped splices are not permitted, but FAA type L-823 connectors shall be used. Connections to isolation transformers and fixtures shall be in handholes or light bases. Control cables should be installed in duct or conduit. Each cable shall be identified with a permanent tag in each manhole or handhole through which it passes.

15. GROUNDING.

Each light fixture and metal case or frame of equipment shall be grounded. Grounding is primarily for safety in case of cable faults. The grounding may be provided by driven ground rods or connection to a grounding cable. Preferably the equipment grounds should not be connected to the counterpoise to avoid equipment damage from lightning strikes being conducted by the counterpoise through the equipment.

16. COUNTERPOISES.

Counterpoises are installed to protect the circuits and equipment from lightning damage. Counterpoises should have a separate grounding system and should not be connected to fixtures or equipment because this may channel the voltage and current from the lightning into the circuit. Counterpoises shall be installed for new circuit installations at Naval Air Station or equivalent airfields and may be installed at auxiliary fields in areas of frequent thunderstorms. The counterpoise shall be bare, stranded, copper wire size ~~No. 6 or~~ No. 4 AWG. This wire shall be installed not less than 4 inches and preferably 6 inches above the circuit which it protects. Except under paved areas the counterpoise should be direct burial and preferably not in direct contact with the duct bank. Not less than 6 inches clearance should be provided between the counterpoise and metal parts of the fixtures and equipment grounds. The counterpoise shall be continuous along the circuit. The counterpoise shall be connected to driven ground rods at the lighting vault, where the feeders connect to the lighting circuit, and at intervals not more than 2000 feet apart along the circuit. The ground rod resistance shall be less than 25 ohms. The ground rods shall be not less than 3 feet and preferably 10 from any equipment grounds. Counterpoises for other circuits shall be connected together where this is practical. The connections of the counterpoise to ground rods shall be exothermic welds or brazed.

17. LIGHTNING ARRESTORS.

Lightning arrestors shall be installed on the power leads into the lighting vault and on the input and output terminals of constant-current regulators and other major power distribution equipment. The arrestors protect the equipment in case lightning strikes the circuits. Lightning arrestors may be installed at other locations such as manholes at the ends of feeder circuits.

18. VAULTS.

The airfield lighting vault is the main vault but one or more auxiliary vaults may be required for approach lighting systems. The vaults are located above grade at

locations most suitable for distribution of power. Other power and control locations may be in manholes or handholes for the optical landing system and the wheels watch or on concrete pads which may be fenced for security. Lighting vaults usually consist of three or four rooms as follows:

a. Regulator room: Where the regulator, transformers, and most control equipment are located.

b. Engine-generator room: Where the engine-generator set and automatic power transfer equipment is located. The batteries for starting the engine-generator are located here. Some airfields may have this compartment in a separate building.

c. Entrance and control room: Where the lighting control panel, transfer relay panels, and pilot relay cabinets are located. High-voltage equipment should be prohibited from this room.

d. Some vaults may have a room for supplies, spare parts, and special maintenance equipment.

A new vault should be designed to permit adding one or two more regulators and other accessory equipment or a larger engine-generator set. For an example of a lighting vault, refer to ~~NAVFAC P-272, CAT Code 136-10~~**UFC 3-535-02**.

TECHNICAL MANUAL

AUXILIARY POWER AND POWER TRANSFER EQUIPMENT

SHOREBASED AIRFIELDS

Reference Material

~~Definitive Designs for Naval Shore Facilities.....NAVFAC P-272~~
Electrical Power and Control for Visual Aids 009 00
Constant-Current Regulators 009 02
Airfield Lighting Control Panels 009 05
Design Drawings for Visual Air Navigation Facilities ..... UFC 3-535-02
~~Airfield Lighting.....MIL-HDBK-1023/1~~
Specification for Diesel Engine Generator Sets, 5 KW to 300 KW FAA-E-2204

Alphabetical Index

Subject **Page No.**

Automatic Power Transfer Equipment. 2
Batteries. 2
Controls 2
Description 1
Engine-Generator Set 2
Equipment 2
General Information. 1
Installations Of Engine-Generator. 2
Purpose. 1
Related Equipment 1
Schedule Of Standby Power And Power Transfer Equipment 4
Selection Of Equipment 4
Sources Of Auxiliary Power 1

Record of Applicable Technical Directives

None

1. GENERAL INFORMATION.

2. PURPOSE.

This Work Package (WP) provides the requirements for auxiliary power sources and power transfer equipment for Navy airfield lighting. The mission for most airfields requires the airfield lighting to be available at all times; therefore, in case of failure of the primary power source, auxiliary power is required. The equipment that provides auxiliary power is discussed in the WP.

3. RELATED EQUIPMENT.

The auxiliary power must be provided to the lighting equipment at the same voltage and frequency as the primary source. Related power equipment for the airfield lighting are constant-current regulators (WP009 02). For certain conditions, the auxiliary power source should be controlled remotely from the air traffic control tower and provide an indication that the auxiliary source is operating. These controls and indicator lights are located on the lighting control panel (WP009 05). The lighting circuits and controls are discussed in WP009 00.

4. DESCRIPTION.

5. SOURCES OF AUXILIARY POWER.

Local engine-generator sets are the most frequent source of auxiliary power but other sources may be used. The operations at some airfields may be such that auxiliary power for the lighting is not necessary. Most airfields will require auxiliary power as a back-up power source. Some airfields may have a second prime source

available which is independent of the primary source such that a single fault would not result in a power failure from both sources. This alternate prime source may be the simplest and most practical method of providing auxiliary power.

6. ENGINE-GENERATOR SET.

An engine-generator set often provides the auxiliary power locally when the primary source fails or if selected for specific conditions or maintenance. The engine drives the generator at a synchronous speed for the electrical frequency and is designed for a specified voltage, single or three phase output, and a rated kilowatt power output. The generator requires output connections and switch gear for connecting the electrical power to the circuits in the vault. The kilowatt rating of the generator should be adequate for the load which it is intended to supply plus 20 percent for expansions. The engine-generator set shall be able to start and assume the load within the required transfer time which is normally 15 seconds.

7. AUTOMATIC POWER TRANSFER EQUIPMENT.

When the primary power fails, the lighting vault must be transferred to the auxiliary power source within a certain time. The transfer equipment must detect the power loss, start the generator-set, and transfer the load within this time. Most airfield lighting should transfer in less than 15 seconds. For operations in Category II conditions, the transfer of power must be within one second. To provide the one second transfer time for Category II conditions, the engine-generator set is started and used to deliver power to the lights as visibility decreases to Category II conditions and continues to furnish the power until well after the weather has improved above the Category II conditions. If the engine-generator should fail, the transfer to primary power can be made within one second. The power transfer equipment shall also provide for remote control of the auxiliary power system and energize the indicator lights at the remote lighting control panel.

8. BATTERIES.

The auxiliary power source shall be provided with a bank of batteries for starting the engine-generator set when primary power fails. These batteries shall be maintained at full charge by a battery charger. The power for the battery charger is from the airfield lighting power. These batteries must be able to start the engine within the minimum amount of time.

9. CONTROLS.

The power transfer equipment shall automatically start the auxiliary power source and transfer the load when the primary power malfunctions. Also, remote control for starting the auxiliary power source and switching the load shall be provided at the lighting control panel in the air traffic control tower. This control is used to put the lighting load on the auxiliary power when Category II conditions occur or as a back-up control if the automatic power transfer should fail. There shall be provisions for starting the auxiliary power source locally for maintenance without transferring the load from the primary source or for transferring the load if desired. The lighting control panel in the control tower shall be provided with an indicator light that is energized when the auxiliary source is operating.

10. INSTALLATIONS OF ENGINE-GENERATOR.

11. The engine-generator set and power transfer equipment shall be installed in the engine-generator room of the lighting vault (see figure 1) or in a nearby shelter. The engine-generator set shall be bolted to a concrete mounting pad. The cooling air for the radiator should be obtained from outside the building. The exhaust shall be discharged outside the building. The main fuel tank shall be installed outside the building. A day tank for fuel may be installed inside the building but shall prevent the emission of vapors. The automatic power transfer may be cubicle or switch-gear mounted on a wall or the floor. The primary input power shall be connected to this equipment as well as the generator connections. The batteries and battery charger should be in the room with the engine-generator set. A distribution transformer for lights and local power and a remote-controlled oil switch are usually installed where convenient. For installation details refer to ~~MIL-HDBK-1023/1 and NAVFAC P-272~~**UFC 3-535-02**.

12. EQUIPMENT.

13. The engine-generator set and the power transfer equipment shall be as listed in table 1. The military type engine-generator shall start and accept not less than 75 percent of rated load within 12 seconds. The equipment shall be from manufacturers of qualified products.

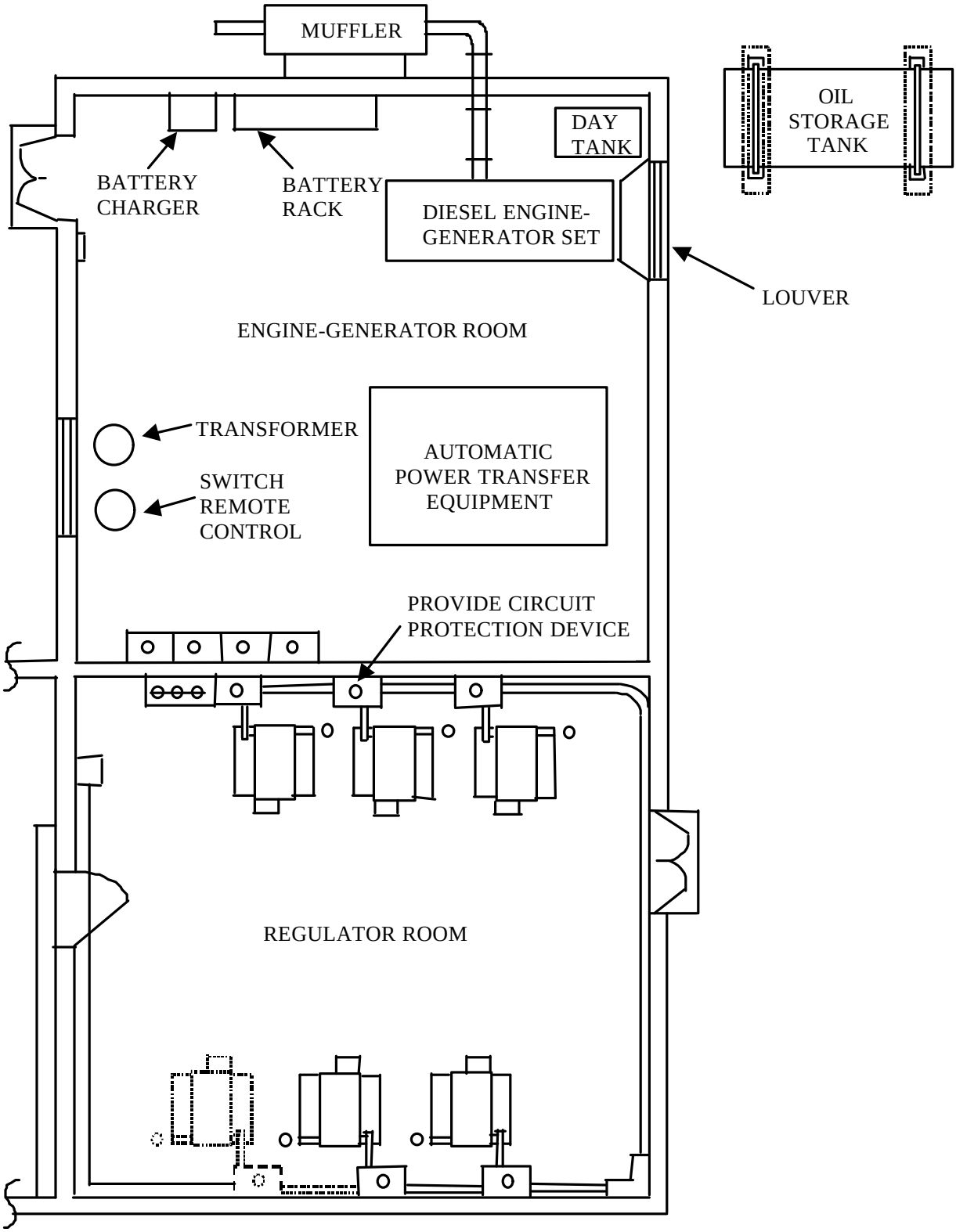

Figure 1. Typical installation plan for standby engine-generator and automatic transfer equipment

TABLE 1. SCHEDULE OF STANDBY POWER AND POWER TRANSFER EQUIPMENT

Purpose and Type of Equipment	Rating		
	Size	Frequency	Voltage and Phases
Standby engine-generator, diesel fuel, fixed installation style, fast start.			
Specification FAA-E-2204, type I, with automatic power transfer.	5-300 KW	60 Hertz	As specified.
Commercial, optional for 2400/4160V power	As specified.	As specified.	As specified.
Power transfer equipment, automatic in 15 seconds.			
Commercial	As specified.	As specified.	As specified.
Other accessories.			
Fuel tanks, engine oil heaters, cooling system, exhaust system, batteries, battery charger, and other accessories as specified.			

14. SELECTION OF EQUIPMENT.

The kilowatt rating for the engine-generator should be for the total rated power of all the regulators and distribution transformers connected or planned to be supplies from this lighting vault plus 20 percent for expansion. The generator output voltage, phases, and wiring shall match the primary power input to the lighting vault, these values may include step-up distribution transformer(s). The automatic power transfer equipment shall be rated for the number of wires, current, voltage, and minimum transfer time required and shall be capable of sensing the failure of any phase or the total power from either the primary power or of the auxiliary power. The type and size of the battery bank will depend on the size of the engine and the most severe starting temperatures.

TECHNICAL MANUAL

CONSTANT-CURRENT REGULATORS

SHOREBASED AIRFIELDS

Reference Material

Electrical Power and Control for Visual Aids 009 00
Auxiliary Power and Power Transfer Equipment 009 01
Isolation and Distribution Transformers 009 03
Special Power Supplies 009 04
Airfield Lighting Control Panels 009 05
Design Drawings for Visual Air Navigation Facilities ..... UFC 3-535-02
~~Airfield Lighting ..... MIL-HDBK-1023/1~~
Specification for Constant-Current Regulators and Regulator Monitors ..... FAA AC 150/5345-10

Alphabetical Index

Subject **Page No.**

Characteristics. 1
Description 1
Equipment 3
General Information. 1
Installations 3
Purpose. 1
Related Equipment 1

Record of Applicable Technical Directives

None

1. GENERAL INFORMATION.

2. PURPOSE.

This Work Package (WP) provides the requirements for constant-current regulators used to supply the current to the series circuits for airfield lighting. These regulators provide a constant current to the circuit from a nominal input distribution voltage. The features and requirements of these regulators are discussed in this WP.

3. RELATED EQUIPMENT.

The use of series circuits to provide electrical power to airfield lighting systems is discussed in WP009 00. The sources of primary and auxiliary power for the lighting vaults that provides the input power and voltage to the constant-current regulators are discussed in WP009 01. The output current from these regulators is the input current to the isolation transformers that connect the lighting fixtures to the primary series circuit (WP009 03). Some special power supplies (WP009 04) may obtain input power from the series circuit and the regulator to provide a specific voltage or current to some visual aids. Remote control of these regulators and associated lighting systems is provided by the airfield lighting control panels (WP009 05) located in the air traffic control tower or the lighting vault.

4. DESCRIPTION.

5. CHARACTERISTICS.

Constant-current regulators provide a constant output current for any load between no load (short circuit) and rated load for a fixed input voltage. For airfield lighting, regulators are required to provide several functions and have specific characteristics as follows:

a. Input voltage: The current regulation is provided for variations of input voltage of plus 10 percent and minus 5 percent. Nominal values of input voltage are 240 volts and 2400 volts.

b. Output current: Two types of regulators are available which provide regulated output current at 6.6 or 20.0 amperes rated.

c. Kilowatt rating: The load ratings of regulators are available in 4, 7.5, 10, 15, 20, 30, 50, and 70 kilowatt sizes. Not all sizes are available for both output currents, input voltages, and both 3- or 5-step brightnesses.

d. Cooling: The small regulators may be air cooled but the larger sizes use insulating oil or liquid as the coolant.

WARNING

The use of polychlorinated byphenyls (PCB) is prohibited and older regulators with this coolant shall not be used.

a. Brightness (intensity) steps: Either three or five steps (settings) can be provided and the current is regulated within 3 percent of the nominal value for each step. The nominal values of current for the 3-step regulators are 6.6, 5.5, and 4.8 amperes which correspond to approximately 100, 30, and 10 percent of the rated intensity for incandescent lamps rated at 6.6 amperes. The nominal current values of 5-step regulators are 6.6, 5.2, 4.1, 3.4, and 2.8 amperes for 6.6 ampere regulators and 20.0, 15.8, 12.4, 10.3, and 8.5 for 20 ampere regulators. These current steps correspond to 100, 20, 4, 0.8, and 0.2 percent of the rated intensity for either 6.6- or 20-ampere incandescent lamps.

b. Types of loads: The output (circuit) load may be resistive or have a reactive load of isolation transformers with up to 30 percent of the transformers having open secondaries. The three percent current regulations applies for any combination of these loads.

c. Open-circuit protection: The regulator shall be deenergized within 2 seconds if an open circuit fault occurs in the output circuit. Open output circuits are a maximum overload condition.

d. Over-current protection: For regulators of 10 kilowatts or more the regulator shall be deenergized within 5 seconds if the output current exceeds the nominal value by 5 percent or in 1 second if the overcurrent is 25 percent or more.

e. Isolation of input voltage from output circuit: The power input circuit shall be electrically isolated from the output circuit.

f. Maximum output voltage: The output voltage shall not exceed 4,250 volts even for an open circuit of the output.

g. Control: The regulator may be operated by a manual switch on the regulator which also provides for remote control. The remote control can be either 120 volts alternating current or 48 volts direct current.

h. Output current meter: An ammeter which reads true RMS values for the output current shall be provided. The ammeters on earlier regulators usually did not read true RMS current.

i. Elapsed time meter: An elapsed time meter shall be installed as part of the regulator or as a special item which records the hours of operation of the regulator on brightness step 5 (rated output current). The operating hours are used for determining the time for group lamp replacement.

j. Lightning arrestors: Lightning arrestors suitable for the size and type of regulator shall be provided for the output (secondary) terminals of the regulator.

k. Monitoring: Monitoring systems are available to determine and indicate the status of regulator and the series lighting circuit. Type L-828 regulators do not have monitoring, but type L-827 monitors are separate modules for monitoring type L-828 regulators. The type L-829 regulators have monitoring as an integral part of the regulator. The monitor shall detect fault conditions of:

(1) Loss of input power to the regulator,

(2) Shutdown of the regulator by any of the protective circuits,

(3) A drop of 10 percent or more in volt-amperes delivered to the series circuit,

(4) Failure of the regulator to deliver output current as selected by the brightness (intensity) setting, and

(5) Failure of a preset number of lamps in the series circuit.

This monitoring may be desirable for certain lighting circuits, and shall be provided for runway lighting and approach light systems for CAT II runways.

6. INSTALLATIONS.

7. The constant-current regulators shall be installed in the regulator room of the lighting vault for the lighting

system (see figure 1). Space around the regulator shall be provided for operating and performing maintenance on the regulator and for air circulation. All controls and meters shall be readily accessible. The case or frame of the unit shall be grounded to the vault grounding system, and the lightning arrestors properly connected to this ground. The input and output terminals shall be protected to prevent accidental physical contact.

WARNING

The input and output terminals of these regulators are at high voltage potential. Physical contact with these terminals will result in serious injury or death.

For arrangements for using the regulators for lighting systems, refer to ~~MIL-HDBK-1023/1~~**UFC 3-535-02**.

8. EQUIPMENT.

9. The constant-current regulators shall be in accordance with FAA Advisory Circular AC 150/5345-10, type L-828, class 1 or 2, style 1 or 2 (without monitoring), or type L-829, class 1 or 2, style 1 or 2 (with monitoring) (see figure 2). The size (kilowatt rating) shall be not less than the total lamp or resistive load connected plus 20 percent. The class (output current) shall be as required for the lamps in the lighting system or as required for the primary of the isolation transformers. Most Navy installations use 2400 volts input power, but some installations use 240 or 480 volt input power. Style 2 (5-step) regulators provide greater flexibility and should be used in most installations. To provide monitoring for existing regulators and circuit add type L-827 monitors.

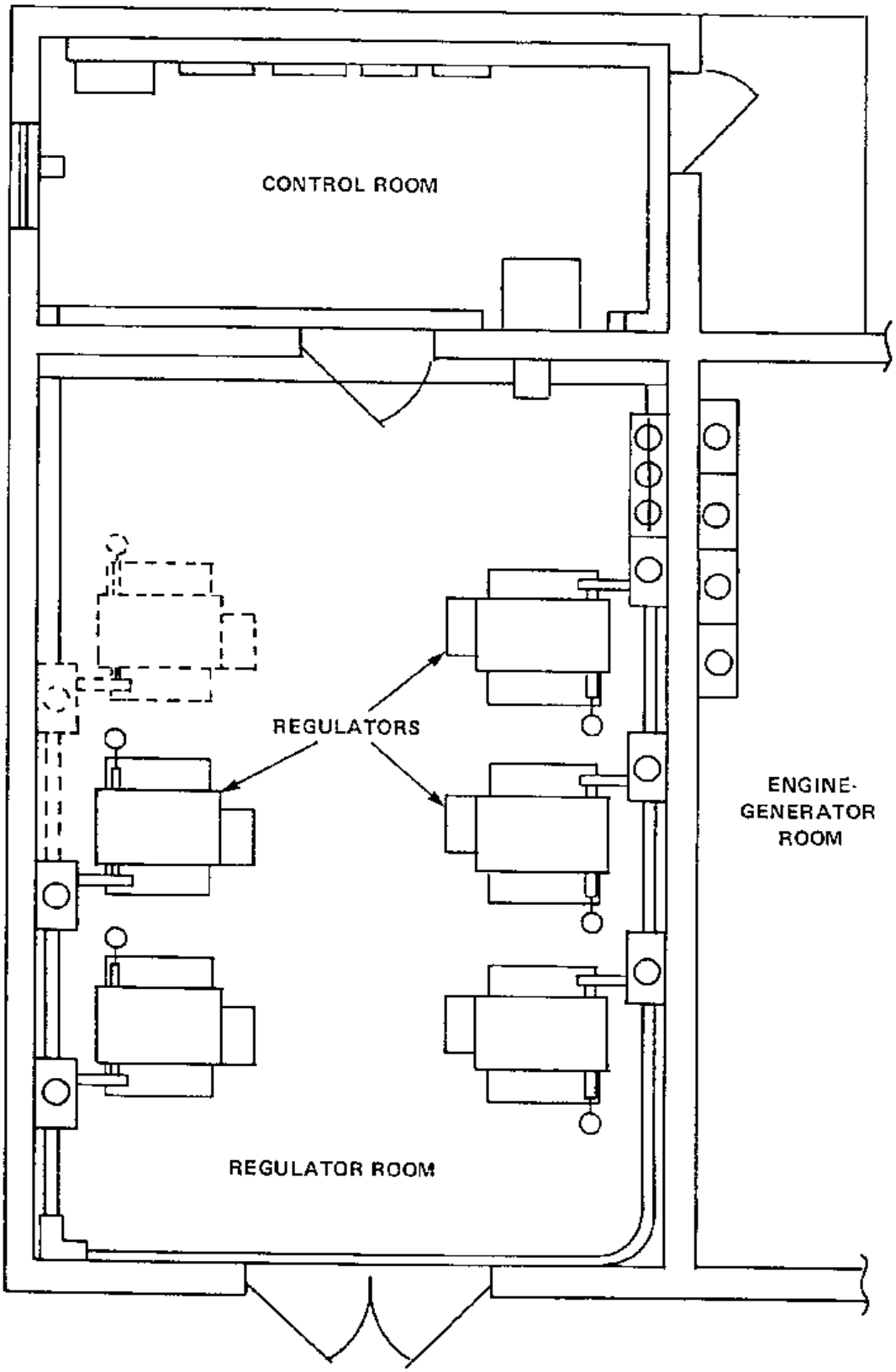

Figure 1. Typical arrangement of regulators in vault

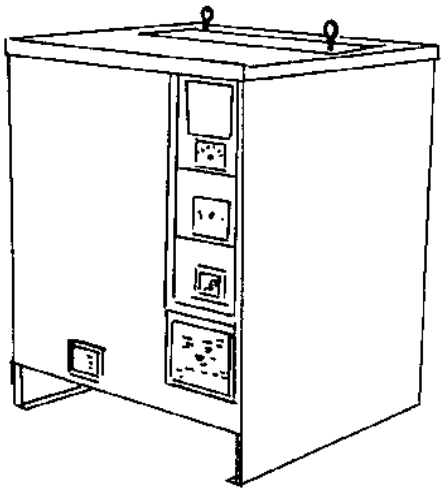

AIR COOLED

CONSTANT-CURRENT REGULATORS:
FAA AC 150/5345-10, SPECIFICATION L-828
CLASS 1 OR 2, STYLE 1 OR 2.

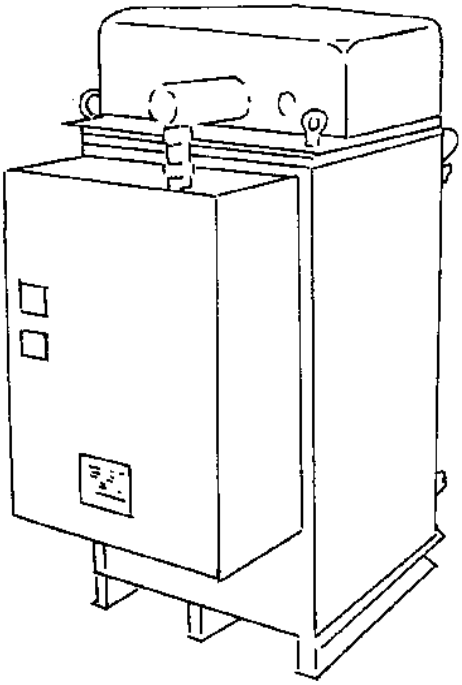

LIQUID COOLED

Figure 2. Examples of constant-current regulators

TECHNICAL MANUAL

ISOLATION AND DISTRIBUTION TRANSFORMERS

SHOREBASED AIRFIELDS

Reference Material

Transformers, Distribution, Specification for ..... FED W-T-631
Electrical Power and Control for Visual Aids 009 00
Constant-Current Regulators 009 02
Isolation Transformers for Approach Lighting System (1500 Watt) FAA-E-2690
~~Transformer, Power, Isolation, Series Circuit ..... MIL-T-27535~~
Specification for L-823 Plug and Receptacle, Cable Connectors ..... FAA AC 150/5345-26
Isolation Transformers for Airport Lighting ..... FAA AC 150/5345-47

Alphabetical Index

Subject **Page No.**

Description 1
Equipment 2
General Information. 1
Installations 2
Purpose. 1
Related Equipment 1
Series Isolation Transformers 1
Series/Multiple Transformers 2
Voltage Distribution Transformers. 2

Record of Applicable Technical Directives

None

1. GENERAL INFORMATION.

2. PURPOSE.

This Work Package (WP) provides the requirements for series circuit isolation transformers and for voltage distribution transformers used for airfield visual aids. The isolation transformers transfer the power from the series primary circuit to the individual lighting fixtures. The distribution transformers connect voltage type fixtures to a multiple (voltage) distribution circuit. The features and requirements of these transformers are discussed in this WP.

3. RELATED EQUIPMENT.

The use of series and multiple circuits to provide electrical power to the airfield lighting systems is discussed in WP009 00. The power for a series circuit is provided by a constant-current regulator (WP009 02). The power for a multiple circuit is from the voltage between two conductors from a voltage distribution system which usually involves a distribution transformer having a suitable ratio of voltage. Many types of lights and fixtures may be connected to the secondary (output) of transformers of either type.

4. DESCRIPTION.

5. SERIES ISOLATION TRANSFORMERS.

Isolation transformers for series/series circuits have their output current at a fixed ratio to the input current. For airfield lighting systems, these transformers are encased in a waterproof material suitable for direct burial. The output circuit (secondary) is electrically isolated from the input circuit (primary). The values of rated series current for airfield lights are 6.6 or 20 amperes, which may be used for primary and secondary circuits. The ratios of secondary to primary current may be 6.6/6.6, 20/20, 20/6.6, and 6.6/20 amperes. The wattages of isolation transformers have been restricted to 30/45, 65, 100, 200, 300, 500, and 1500 watts. Not all sizes are available in all current ratios. These transformers are designed for either 60 or 50 hertz power circuits, most Navy airfields use 60 hertz. The

primary leads have two single conductors with a molded plug on one lead and a molded receptacle on the other. The primary leads shall be not less than 500- volt insulation. The secondary lead is a 2-conductor cable with a molded receptacle and shall be not less than 600-volt insulation. These plus and receptacles conform to specification L-823 of FAA AC 150/5345-26.

6. VOLTAGE DISTRIBUTION TRANSFORMERS.

The distribution transformers for voltage type lights have a fixed ration of secondary (output) voltage to the input voltage. Often the input voltage is at a higher level to reduce line drop or use smaller size conductors and stepped-down to lamp voltage at the fixture. The distribution transformer may be located in the lighting vault or other convenient source of power. Most distribution transformers are not intended for burying underground or for submersion.

7. SERIES/MULTIPLE TRANSFORMERS.

Some fixtures or equipment require a fixed input voltage but the convenient power source is a series circuit. Taxiway guidance signs, obstruction lights, or a lighted wind cone at the end of a runway are examples of these fixtures. This power may be provided by a series to multiple transformer or power converter. These may be available from commercial sources.

8. INSTALLATIONS.

9. The series isolation transformers may be buried underground at the light fixture, but the preferred installation is in a light base or handhole at the fixture. Often the fixture may be mounted on the same base Installation in bases provides easy access to the transformer for maintenance and replacements. The connections to the primary circuit and to leads to the lamp are by FAA L-823 connectors. The multiple distribution transformers are often installed in the lighting vault or other source of power where convenient. Some of these transformers may require protection from the weather but others are suitable for mounting on the surface or overhead where permitted.

10. EQUIPMENT.

11. The series isolation transformers shall be in accordance with FAA AC 150/5345-47 type L-830 (see figure 1). The leads of the Military type transformers are longer than those of FAA transformers. If the power is at 50 hertz, use FAA type L-831 transformers. Select the specific type of transformers required for the wattage, input current, and output current. The options are as follows:

a. Wattage: 30/45, 65, 100, 200, 300, and 500 watts.

b. Input current: 6.6 and 20 amperes.

c. Output current: 6.6 and 20 amperes.

For centerline approach lights mounted on low-impact resistant supports, a 1500-watt transformer for five lights is required. These transformers are in accordance with Specification FAA-E-2690.

12. The multiple distribution transformers shall be in accordance with FED-W-T-631 or other commercial type suitable for the application. The wattage rating, input volts, and output volts shall be as required for the fixture.

SERIES ISOLATION TRANSFORMER:
FAA AC 150/5345-47,
TYPE L-830 OR L-831,
INPUT: 6.6 OR 20A,
WATTAGE: 30/45, 65, 100, 200, 300,
OR 500W

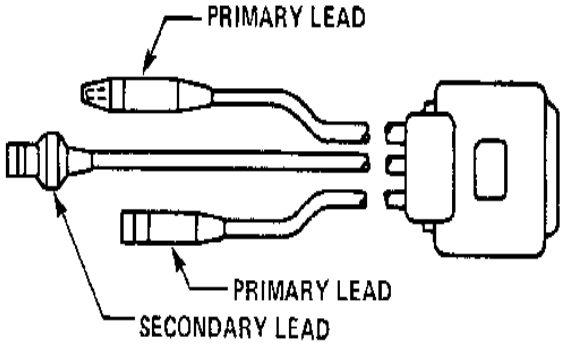

Figure 1. Typical series circuit isolation transformer

TECHNICAL MANUAL

SPECIAL POWER SUPPLIES

SHOREBASED AIRFIELDS

Reference Material

~~Definitive Designs for Naval Shore Facilities ..... NAVFAC P-272~~
Runway End Identification Lights (REIL) 003 05
Approach Lights, Category I — ALSF-1 ..... 003 06
Approach Lights, Category II and Category III — ALSF-2 ..... 003 07
Short Approach Light System (SALS) 003 08
Optical Landing Aids (OLA) 003 13
Medium-Intensity Approach Light System with Runway Alignment Indicator Lights (MALSR) 003 14
Runway Distance Markers (RDM) 004 09
Arresting Gear Markers and Markings 004 10
Taxiway Guidance Signs 005 04
Special Taxiway Signs (TACAN, Billboard) 005 05
Apron and Parking Area Lights 006 02
Wheels-up and Wave-off Lights 006 03
Fueling Area Lights and Markings 006 05
Special Helipad Lights 007 06
Design Drawings for Visual Air Navigation Facilities ..... UFC 3-535-02
Sequence Flashing Light System FAA-E-2628
Specification for Taxiway and Runway Signs ..... FAA AC 150/5345-44
Specification for Discharge Type Flashing Light Equipment ..... FAA AC 150/5345-51

Alphabetical Index

Subject **Page No.**

Description 2
Floodlight Power 3
General Information. 2
Guidance Signs Power Units 3
Installations 4
Medium-Intensity Approach Lights With RAIL (MALSR) 3
Purpose. 2
Related Equipment 2
Runway End Identification Lights (REIL). 2
Sequence Flashing Light (SFL) Power Supply. 2
Series/Multiple Transformers 3
Wave-Off Lights Power Converter 3
Wheels-Up Lights Power Supply. 3
Wind Direction Indicators. 3

Record of Applicable Technical Directives

None

1. GENERAL INFORMATION.

2. PURPOSE.

This Work Package (WP) discusses special power supplies used for airfield lighting. These special power supplies do not include series/series isolation transformers or voltage distribution transformers. Some of these power supplies have important functions in addition to providing power, but others are only a variation of standard series isolation transformers or voltage transformers. The lighting system design specifications state the type power supply to be used, or that a special unit is required to provide power from a convenient electrical source. To assist in explaining the applications, the features and requirements of these power supplies are discussed in this WP and in the WP for the specific visual aid.

3. RELATED EQUIPMENT.

Since these power supplies are part of a lighted visual aid system, these units are related to the light fixtures and controls of the system. The following lighting systems may include the use of special power supplies:

a. Sequence Flashing Lights (SFL) for high-intensity approach lights (WP003 06, WP003 07, and WP003 08),

b. Runway End Identification Lights (REIL) (WP003 05),

c. Medium-intensity Approach Lights System with RAIL (MALSR) (WP003 14),

d. Optical Landing Systems (OLS) (WP003 13),

e. Guidance signs (WP004 09, WP004 10, WP005 04, WP005 05),

f. Wave-off lights (WP006 03),

g. Wheels-watch lights (WP006 03),

h. Floodlights power (WP006 02, WP006 05, WP007 06).

4. DESCRIPTION.

5. SEQUENCE FLASHING LIGHT (SFL) POWER SUPPLY.

The power to the SFL for the high-intensity approach light systems is furnished by a master control unit. This unit provides the following functions for the SFL:

a. Supplies 240 volt, 60 hertz, conditioned power to each SFL unit for up to 21 lights.

b. Transmits triggering signal for each SFL fixture in time synchronization. With SFL spaced at 100-foot intervals the trigger signal to adjacent lights shall be at one cycle intervals of the 60 hertz power. The flash cycle is repeated twice per second.

c. If used, monitoring of each SFL indicates that the required number of lights are flashing.

d. Provides three steps of intensity control of the SFL as selected at the lighting control panel.

The master control unit shall be provided with 120/240 volts, 60 hertz, 3 wire, input power

NOTE

Some earlier units used 240/480 volt input.

The control unit shall include an elapsed time meter for recording time operating at 100 percent intensity and local and remote controls. Each SFL fixtures shall have a unit power supply to provide the power and trigger signal to each light. The master control unit and the light power units are special equipment as part of the SFL system. Refer to FAA-E-2628 or to MIL-L-26311 for existing installations.

6. RUNWAY END IDENTIFICATION LIGHTS (REIL).

The usual power supply unit for the REIL shall be capable of operating either the REIL or the MALSR SFL or both. This unit provides the following functions for the REIL:

a. Supplies 240 volt, 60 hertz, conditioned power to each of the two SFL of the REIL.

b. Transmits triggering signal for each of the two flashing lights. Both lights shall flash simultaneously at a steady rate between 60 and 120 times per minute.

c. Provides steps of intensity control as selected for the lights.

The power supply unit shall be in accordance with FAA Advisory Circular AC 150/5345-51, type L-849, style E. The power supply unit shall be suitable for outdoor installation and the input voltage shall be 120/240 volts, 60 hertz. Some installations may require a special REIL power supply that has an adapter for the input power from the series circuit for the runway edge lights. Each flashing light should have a unit power supply or one unit may serve both lights since they flash simultaneously.

7. MEDIUM-INTENSITY APPROACH LIGHTS WITH RAIL (MALSR).

The power supply unit for the MALSR supplies power for both the steady-burning lights and the SFL. The input power is 120/240 volts, 60 hertz. The unit supplies 120/240 volts with three steps of intensity control to the steady-burning lights. A control unit, which may be part of the power supply unit, shall be used for the SFL of the system. This control unit provides the following functions for the SFL and MALSR:

a. Supplies 240 volt, 60 hertz conditioned power for up to five SFL of the MALSR and the two REIL.

b. Transmits triggering signal for each of the SFL in time synchronization. With the SFL spaced at 200-foot intervals the trigger signal to adjacent lights shall at two cycles timing of the 60 hertz line. The flash cycle is repeated twice per second.

c. Provides three steps of intensity control of the SFL as selected at the lighting control panel. The control unit shall provide local or remote control and should include an elapsed time meter to record the hours of operation at full intensity. Each SFL fixture shall have a unit power supply. The MALSR power supply unit is a 15 KVA commercial distribution transformer unit with 120/240 volt output and intensity settings. The SFL control unit and the light power units shall be in accordance with FAA Advisory Circular AC 150/5345-51, type L-849, style E.

8. GUIDANCE SIGNS POWER UNITS.

Most taxiway and other guidance signs operate from series circuits by isolation transformers. The incandescent lamps may be series type lamps or in some cases voltage type lamps in a series-parallel arrangement. Some signs use fluorescent or other type lamps that require ballast type transformers to operate the lamps. The sings which may use these types of power supplies include taxiway guidance signs, runway distance markers, arresting gear markers, and TACAN and billboard signs. The power supply is considered part of the sing and is not procured as a special item and does not require special connections to the circuit. These signs with the special power supplies shall be in accordance with FAA Advisory Circular AC 150/5345-44.

9. WAVE-OFF LIGHTS POWER CONVERTER.

The strobe wave-off lights require a voltage source of power and a flasher for each six-light system. The input voltage to the power converter units shall be 480 volts. Both the power converter units and the optical assembly units are above ground and may be separated a maximum of 150 feet. The power converter units condition the power and the trigger signal for the optical assembly flash units.

10. WHEELS-UP LIGHTS POWER SUPPLY.

The wheels-up lights require a voltage source of 120 volts. A single 2400 to 120/240 volt 15 kilovolt-amperes distribution transformer and a stepped or continuously variable autotransformer to control the intensity of the 20 lamps provides the required power. These are standard commercial items of equipment.

11. FLOODLIGHT POWER.

Several types of floodlights are used and these often require special power supplies. Except for floodlights using incandescent lamps special power supply units are usually required. In most cases the power unit is included as an integral part of each light fixture. The type of input power required is specified for the light and these lights require several minutes before re-starting after the light is turned off. Floodlights are used for apron and parking areas, fueling area, and some helipad lights. Most floodlights are commercial items and include the special ballast or power supply. Floodlights used for fueling lanes or helipad may use a series circuit for input power. The power supply is usually included with the light but may obtain the power from a series isolation transformer.

12. SERIES/MULTIPLE TRANSFORMERS.

Some airfield lights require a voltage input which is connected to a series circuit. These lights may require special power adapters or use a commercial series/multiple transformer. If a special adapter is required, the type will be specified. For other lights a series/multiple transformer with the correct input current, output voltage, and load rating can be used.

13. WIND DIRECTION INDICATORS.

Power adapters or boosters may be used to provide adequate voltage to the lighting circuit of wind direction indicators where the voltage drop in long lines is excessive. These power boosters can provide up to one KVA.

14. INSTALLATIONS.

15. The installations of the special power supplies varies with the lighting system and the type oaf power supply. For details of installing some of these special power supplies, refer to ~~NAVFAC P-272~~**UFC 3-535-02**.

General guidelines for installing these power supply units are as follows:

a. The master control units for the SFL of high-intensity approach lights are installed on a concrete pad in the approach zone near the SFL or in the approach lighting vault. A two-conductor cable for the 240 volt power and a single conductor cable for the triggering signal is installed between the master control unit and each SFL power unit. The individual power units are mounted at the base of the support for the light.

b. The power supply unit for REIL shall be in an enclosure for outdoors installation at the master REIL light mounted on a concrete pad. If a power adapter for a series circuit is used it will usually be located at the same place on the pad or in a handhole or light base. The light power units shall be at the site for each light on a concrete base. Usually the light is mounted on the power unit.

c. The MALSR power supply is in an enclosure suitable for outdoors installation mounted on a concrete pad in the approach area. The SFL control unit may be in the same enclosure or as a separate unit more convenient to the SFL. The light power units are located on the ground at the base of the SFL supports. All units are usually elevated installations on concrete pad or bases.

d. The power and control boxes for the OLS are mounted on the trailer of the OLS unit.

e. The special power units for guidance signs are usually in the housing of the sign. The isolation transformers may be in light bases or buried near one of the supports for the signs. The cables to the sign are installed in one of the supports.

f. The power converter unit for each strobe wave-off light is above ground on a light base 30 to 100 feet from the optical assembly unit. Both units are mounted on frangible couplings.

g. The distribution transformer and switching equipment for the wheels-up lights are in an underground manhole. The dimmer control and connection plugs are in an elevated control panel near the wheels watch handhole.

h. The special power supply units for floodlights are usually in the housing of the light. The light installation includes the power supply.

i. The series/multiple transformers are usually similar to isolation transformers with molded connectors on the leads and are often installed in light bases or handholes.

TECHNICAL MANUAL

AIRFIELD LIGHTING CONTROL PANELS

SHOREBASED AIRFIELDS

Reference Material

Electrical Power and Control for Visual Aids 009 00
Auxiliary Power and Power Transfer Equipment 009 01
Constant-Current Regulators 009 02
Special Remote Control Equipment 009 06
~~Panel, Airport Lighting Control, General Specification for ..... MIL-P-8944~~
Specification for L-821 Panels for Remote Control of Airport Lighting ..... FAA AC 150/5345-3

Alphabetical Index

Subject **Page No.**

Characteristics. 1
Description 1
Equipment 2
General Information. 1
Installations 2
Purpose. 1
Related Equipment 1
Types Of Control Panels 2

Record of Applicable Technical Directives

None

1. GENERAL INFORMATION.

2. PURPOSE.

This Work Package (WP) discusses the requirements and major features of the airfield lighting control panels. These control panels provide the switches for remotely controlling airfield lighting systems. Most airfields have two or more panels. Different lighting systems may be selected, turned ON and OFF, and intensity controlled. This WP provides guide information for planning for lighting controls.

3. RELATED EQUIPMENT.

Remote control of airfield lights involves energizing the constant-current regulators (WP009 02) for the lights to be operated or to directly energize other types of equipment, and to select one or more lighting circuits (WP009 00) by obtaining power from a given regulator. A circuit selector switch (WP009 06) is operated from the control panel to connect the regulator to the proper circuit. Most airfields have an alternate control panel in the lighting vault, and to prevent conflicting operations, control transfer panels allow only one remote lighting panel to be active (WP009 06). To prevent voltage line drop from affecting remote control if the control circuits are long, pilot relay panels (WP009 06) are used. The control panel should have a switch to start the auxiliary power source and an indicator light to show that this power source is supplying the load (WP009 01).

4. DESCRIPTION.

5. CHARACTERISTICS.

A lighting control panel has several switches for energizing lighting circuits and individual visual aids. The switches may be toggle, push-pull, push-button, or similar types adequate for the purpose. To prevent simultaneously energizing lights on intersecting runways or opposite approaches, a single rotary runway selector switch is used. To provide intensity settings for the various lighting systems, one or more rotary

brightness setting switches with three or five positions are used. Some switches are automatically lighted to correspond with the lighting circuits that are energized to more accurately determine the status of the airfield lights. A facsimile plan of the field is often installed on the control panel to aid in selecting the lights and reviewing the status of operating systems, and in some cases the energizing switches are located on or near the section of the facsimile corresponding to the lighting circuits. Lighting control panels for large airfields may also have digital read-out or displays showing the status of the airfield visual aids and related information. The control panels should provide indicator lights showing that the auxiliary power source is supplying power and also may show the monitored status of the sequence flashing lights, steady-burning lights, or monitored status of constant-current regulators. The control panel may include a timer and buzzer to alert the traffic controller that certain lights have been operating at 100 percent intensity for 15 minutes or longer.

6. TYPES OF CONTROL PANELS.

The type of panel required usually depends on the size and complexity of the airfield and the lighting systems installed. For some airfields the traffic patterns of aircraft may require more intricate control panels. Small airfields may require only basic control panels~~. The military specification provides for three classes of panels. Class I is for basic lighting systems which may include the following~~ **with**:

a. Beacon,

b. Obstruction lights,

c. Wind direction indicator,

d. Runway edge lights,

e. One approach light system,

f. Taxiway lights.

~~Class II~~ Panels may have additional controls for runway centerline and touchdown zone lights, taxiway centerline lights, and intensity control for these lights. ~~Class III panels may be a combination of Class I and II plus~~ **Additional** controls for optical landing systems, monitoring indication of outages of sequence flashing lights and additional approach light systems **may also be required**. The FAA control panels may have features which would be desirable for some airfields, especially for controlling the auxiliary power source.

7. INSTALLATIONS.

8. The primary lighting control panel is located in the air traffic control tower. The alternate control panel is usually located in the main airfield lighting vault control room. The alternate control panel for the approach lights should be in the approach lighting vault. The control panel may be surface-mounted or flush-mounted in the console. The alternate control panel is usually mounted on a rack. Exterior terminal boxes may be used for control cable terminals and shall be marked for easier identification. All connections should be identified and marked at all terminal boards. Spare wires and terminals should be provided for expansion of the system.

9. EQUIPMENT.

10. ~~The airfield lighting control panels for Navy airfields are usually in accordance with MIL-P-8944, class I, II, or III. The major features of the classes of panels are shown in the following MS drawings:~~

~~a. Class I — MS27003-1 and -11,~~

~~b. Class II — MS27003-2 and -22,~~

~~c. Class III — MS27003-3 and -33.~~

~~An example of a class III panel is shown in figure 1.~~ Control panels in accordance with FAA AC 150/5345-3, type L-821~~, are also acceptable~~ **should be used**. **See figure 1.**

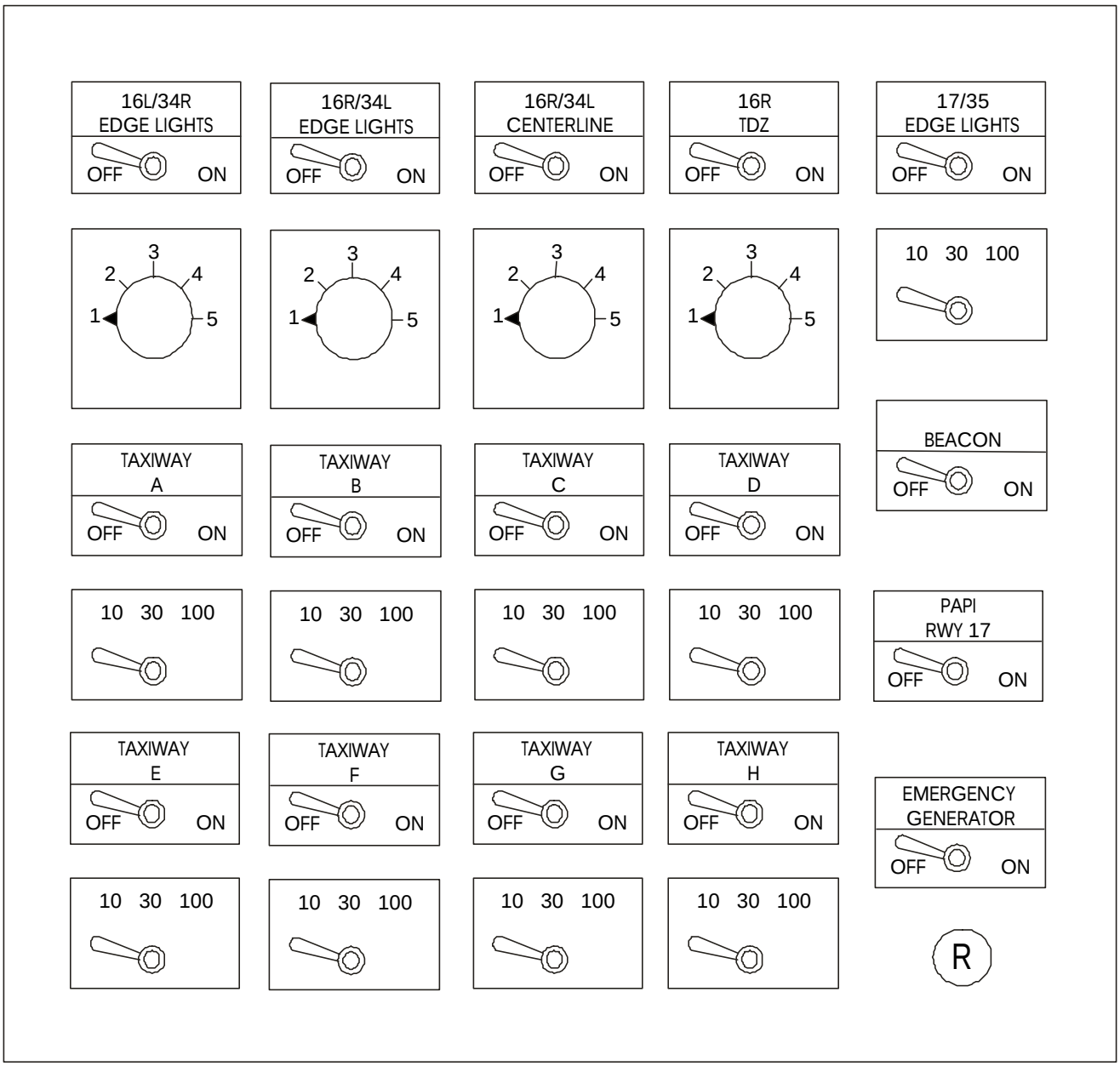

Figure 1. ~~An example of an airfield lighting control panel~~**Typical Conventional Lighting Control Panel Layout 1.**

TECHNICAL MANUAL

SPECIAL REMOTE CONTROL EQUIPMENT

SHOREBASED AIRFIELDS

Reference Material

Electrical Power and Control for Visual Aids 009 00
Constant-Current Regulators 009 02
Airfield Lighting Control Panels 009 05
Specification for L-841 Auxiliary Relay Cabinet Assembly for Pilot Control of Airfield Lighting Circuits ..... FAA AC 150/5345-13

Alphabetical Index

Subject **Page No.**

Automatic Controls 2
Characteristics. 1
Circuit Selectors 2
Control Transfer Panels. 2
Description 1
Equipment 3
48-Volt Direct Current (VDC) Controls 2
General Information. 1
Installations 3
120-Volt Alternating Current (VAC) Controls 2
Pilot Relays Remote Control Panels 2
Purpose. 1
Related Equipment 1
Schedule of Special Remote Control Equipment 3

Record of Applicable Technical Directives

None

1. GENERAL INFORMATION.

2. PURPOSE.

This Work Package (WP) discusses the requirements and features of special control equipment required for airfield lighting systems. This equipment provides for control transfer, selection of circuits to be energized by a given regulator, and low-current pilot relay panels to provide longer control circuits. The special requirements and features of the equipment in this WP are provided as guide information for designing the lighting control system.

3. RELATED EQUIPMENT.

The general requirements for the control circuits for airfield lighting systems are discussed in WP009 00. The requirements for remote control panels are discussed in WP009 05. One constant-current regulator (WP009 02) may be used to supply power to more than one lighting circuit alternately or simultaneously, and equipment to provide this selection is necessary.

4. DESCRIPTION.

5. CHARACTERISTICS.

The special remote control equipment is used for specific control functions where each item of equipment relates to the airfield lighting control panels operation.

The number of special control items required for a given airfield varies with the size and complexity of the airfield.

6. CONTROL TRANSFER PANELS.

Most airfields have the primary remote control panel in the traffic control tower and an alternate remote control panel in the lighting vault. Simultaneous control from both panels shall be prevented by using control transfer panels. Control transfer panels usually contain an 8-pole double-throw relay in an enclosure. Several of these panels may be needed to accommodate all the control circuits. The relay connects either control panel to the control circuit loads. Normally the control panel in the control tower is connected to the load circuits, but by actuating a transfer switch the relays transfer the load to the alternate control panel.

7. CIRCUIT SELECTORS.

When a given constant-current regulator is used to energize more than one circuit, one or more circuit selectors or circuit selector switches are required to transfer the circuits to the secondary (output) of the regulator. The circuit selectors shall be capable of transferring load circuits for regulators of 5000 volts or less for either 6.6-ampere or 20-ampere output or both. Circuit selector switches can be obtained to handle up to four circuits. Any one or all the circuits may be energized from the one regulator. The transfer of the load circuits shall be accomplished in one second or less. The output circuit of the regulator shall be shorted before opening or closing the load contacts of the circuit selector. The leads to the load circuit being switched is shorted before that circuit is connected or disconnected for circuit selector switches, but connections to other load circuits are not affected. When a load circuit is not connected for operation it shall be isolated from the regulator output. If none of the load circuits are selected, the output of the regulator shall be shorted. Circuit selector switches may be used for connecting taxiway lighting circuits where one or more circuits may be operated simultaneously from a regulator or used for transferring the load between intersecting runways when both runways are not to be lighted at the same time.

8. PILOT RELAY REMOTE CONTROL PANELS.

The relay coils for operating the constant-current regulators often require one ampere of current. This limits the length of control circuits for direct operation to only a few thousand feet. Often the cable length between the control tower and lighting vault may be several thousand feet. To permit longer distances pilot relay panels are used. The pilot relay panels consist of 20 or more relays, terminal boards, and wiring in an enclosure. The relays have low-current type coils and double pole contacts. Mot relays shall be single-throw type but some may be double-throw type.

a. 120-Volt Alternating Current (VAC) Controls. Most Navy airfields use 120 VAC control circuits and pilot relay panels. Two types of pilot relay panels with 24 relays are permitted. The maximum length of control circuits between the lighting control panel in the tower and the pilot relay panel is considered to be 7350 feet and is adequate for most airfields.

b. 48-Volt Direct Current (VDC) Controls. The length of control circuits between the control tower and some lighting vaults, especially approach lighting vaults, may be longer than the 120 VAC circuits permit. For these circuits 48 VDC control circuits may be used. The FAA type L-841 pilot relay assemblies are this type of system. These assemblies provide a 48 VDC power supply by using a full wave rectifier and 20 plug-in relays. With these 48 VDC circuits the length of control circuits may be three miles or more using size 19 AWG telephone control cables.

9. AUTOMATIC CONTROLS.

Some airfield visual aids, which are operated on a routine schedule, may be located nearer local acceptable sources of electrical power than to the lighting vault. It may be more practical to use automatic controls, such as photoelectric switches or time clock controllers, than to install long control circuits. Timer switches can turn circuits ON and OFF on a fixed schedule which can be adjusted as required. Photoelectric switches can turn circuits ON or OFF or can change the intensity for two or three settings as the sky brightness changes. The photoelectric controls can automatically select the desired intensity for visual aids that are intermittently operated by remote control. Automatic controls are more often used for isolated visual aids or at airfield without 24-hour air traffic control. Some of these visual aids include beacons,

TABLE 1. SCHEDULE OF SPECIAL REMOTE CONTROL EQUIPMENT

Purpose and Type of Equipment	Rating
Control transfer panels.	
Commercial	By manufacturer.
Circuit selector switch.	
FAA AC 150/5345-5, type L-847-1, -2, -3, -4	6.6A or 20A, 5000V; one or more of 1, 2, 3, or 4 circuits.
Pilot relay panels.	
FAA AC 150/5345-13, type L-841	48 VDC, 20 relays.
Photoelectric switches and timers	
Commercial or lighting equipment manufacturers.	As required.

lighted wind indicators, obstruction lights, wave-off lights, REILS, RAILS, helipad lights, etc. Automatic controls can be used for runway and taxiway lights during periods when remote controls are not manned.

10. INSTALLATIONS.

11. The control transfer relays and transfer switch are installed in the control room of the lighting vault. The electrical power is 120 VAC for the vault accessories. The control transfer panels are wired for the remote control panel in the control tower and connected to the control load when the relays are not energized and the transfer switch is in the remote position. The circuit selector switches are located in the regulator room of the lighting vault near the regulator. These switches are connected to the regulator output, the load circuits, and the controls circuits as required. The pilot relay panels are located in the control room of the lighting vault. The input power to these panels is 120 VAC which may be rectified for the 48 VDC control panels. The controls for the relays are connected to the load side of the control transfer panels. The output side form the relay contacts are connected to the operating controls of the lighting equipment. The input side to the relay contacts are usually connected to 120 VAC. Photoelectric switches are usually located on or near the visual aid with the photocell aimed at the north sky.

12. EQUIPMENT.

13. The special remote control equipment are listed in table 1. The choice of type of circuit selector switches usually depends on the number of circuits to which the regulator is to supply power. The choice of pilot relay panels usually will be determined by the length of the control circuits. Some installations may prefer the 48 VDC assemblies to permit using smaller wire sizes for the control cables.

☆U.S. GOVERNMENT PRINTING OFFICE: 1995: - 604-029/26127