LAYING CONDITIONS FOR DUCTILE AND CAST IRON PIPE

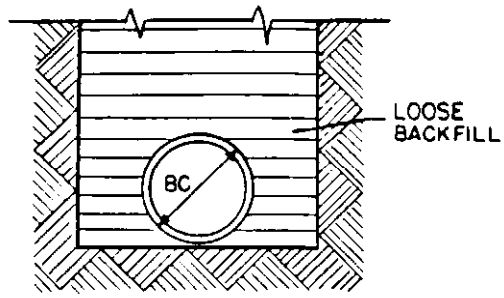

TYPE 1

FLAT BOTTOM TRENCH. LOOSE BACKFILL.

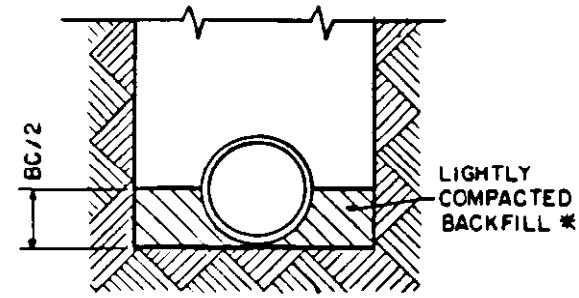

TYPE 2

FLAT BOTTOM TRENCH. BACKFILL LIGHTLY CONSOLIDATED TO CENTER LINE OF PIPE.

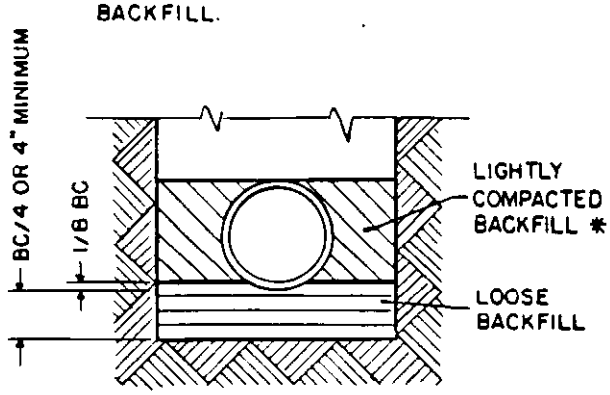

TYPE 3

LOOSE SOIL BEDDING. BACKFILL LIGHTLY CONSOLIDATED TO TOP OF PIPE.

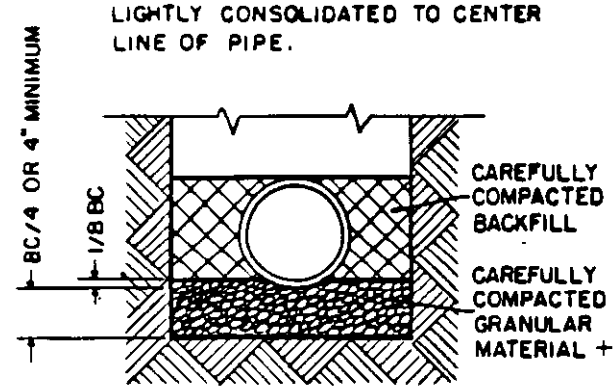

TYPE 4

COMPACTED GRANULAR BEDDING. CAREFULLY COMPACTED BACKFILL TO TOP OF PIPE.

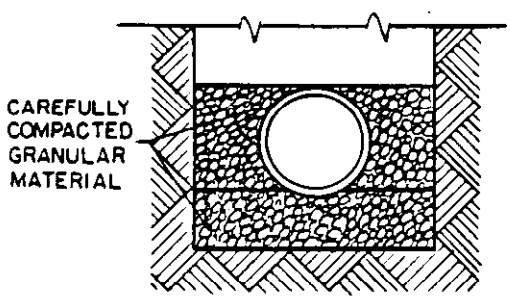

TYPE 5

COMPACTED GRANULAR BEDDING AND GRANULAR BACKFILL TO TOP OF PIPE

NOTE: BACKFILL INDICATED IS INITIAL BACKFILL. FINAL BACKFILL TO BE IN ACCORDANCE WITH OTHER SPECIFIED REQUIREMENTS.

* LIGHTLY COMPACTED BACKFILL: 85-95% STANDARD PROCTOR (ASTM D698) OR 40-70% RELATIVE DENSITY

\+ CAREFULLY COMPACTED BACKFILL OR GRANULAR MATERIAL: 95% STANDARD PROCTOR (ASTM D 698) OR 70% RELATIVE DENSITY.

NOT TO BE USED IN PROJECT SPECIFICATIONS			SKETCH
DRAWN: ROBERT POKOJ DTNSRDC (A)	APPROVED P.E.	DATE: NOV. 5, 1984	02302-1

CONCRETE CRADLES & ARCHES

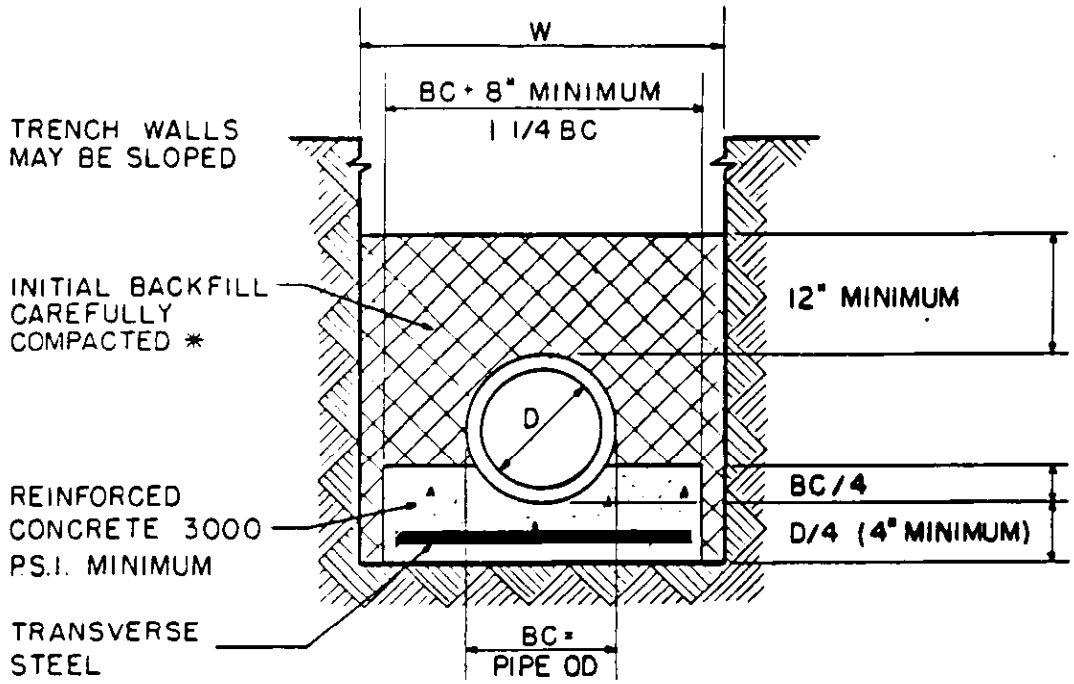

CONCRETE CRADLE

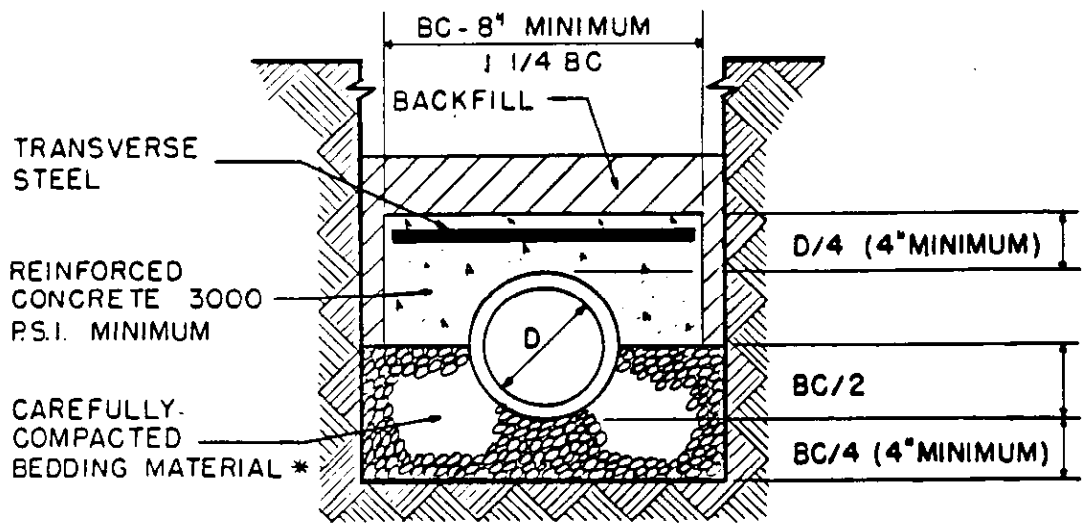

CONCRETE ARCH

* CAREFULLY COMPACTED BACKFILL OR GRANULAR MATERIAL: 95% STANDARD PROCTOR (ASTM D-698) OR 70% RELATIVE DENSITY.

NOT TO BE USED IN PROJECT SPECIFICATIONS			SKETCH
DRAWN: ROBERT POKOJ DTNSRDC (A)	APPROVED: James K Yates, PE	DATE: NOV. 5, 1984	02302-2

LAYING CONDITIONS FOR THERMOPLASTIC PIPE

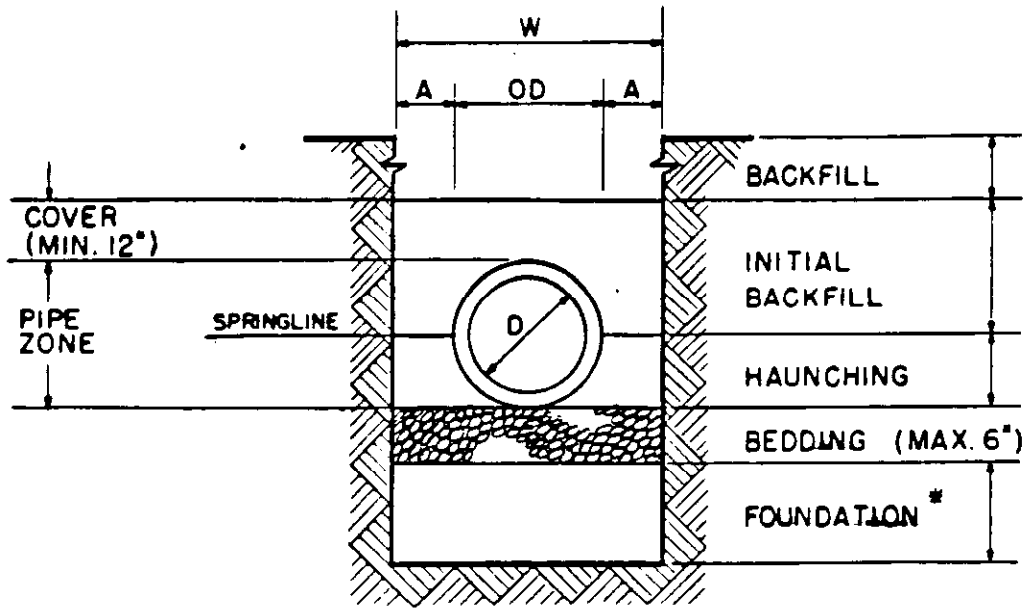

* FOUNDATION IS REQUIRED FOR OVER-EXCAVATION AND UNSTABLE TRENCH BOTTOM CONDITIONS. SEE ASTM D-2321.

TRENCH WIDTHS ALL PIPE

PIPE DIA. "D"	MAXIMUM "A"
1/2" TO 4"	CONSULT MANUFACTURER
6" TO 15"	8"
18" TO 21"	10"
24" TO 30"	12"
33" TO 42"	15"
48" & LARGER	18"

NOT TO BE USED IN PROJECT SPECIFICATIONS			SKETCH
DRAWN: ROBERT POKOJ DTNSRDC (A)	APPROVED: P.E.	DATE: NOV. 5, 1984	02302-3

SEWAGE ABSORPTION TRENCH

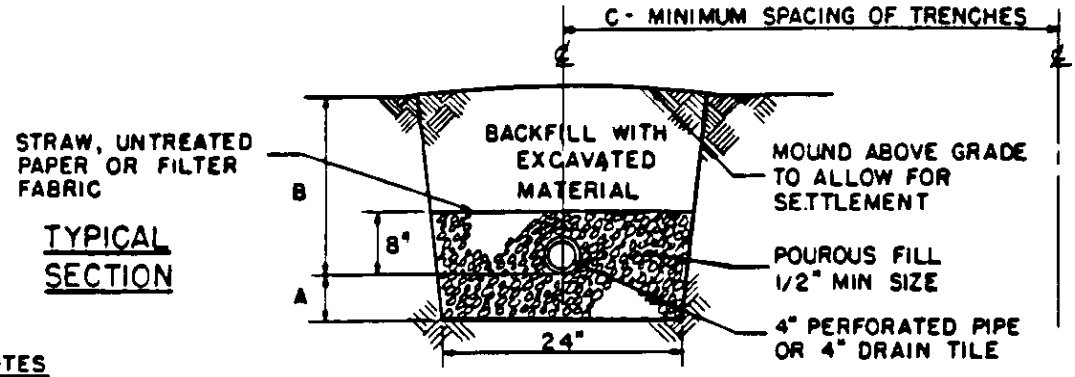

TYPICAL SECTION

NOTES

1. PROVIDE DITCHES AS NECESSARY TO DIVERT SURFACE RUNOFF FROM ENTERING ABSORPTION FIELD.
2. DESIGN STANDARD TRENCH ACCORDING TO PERCOLATION RATE AND LOCAL CODE REQUIREMENTS. SINCE THE LARGEST POSSIBLE "A" DIMENSION IS PREFERRED, SELECT TYPE TO BE USE AND % REDUCTION IN LENGTH OF STANDARD TRENCH (TYPE-1) ALLOWED FROM TABLE BELOW.

	TYPE	A *	B	C	% REDUCTION **
STANDARD →	1	6"	36" MAX	6.0'	0
	2	12"	" "	"	20
	3	18"	" "	"	34
	4	24"	" "	"	43
	5	30"	" "	"	50
	6	36"	" "	"	56
	7	42"	" "	"	60

* THE LARGEST POSSIBLE "A" DIMENSION-DEPTH OF GRAVEL BELOW PIPE IS PREFERRED SELECTION SHOULD BE BASED ON SOIL CONDITION, DEPTH OF WATER TABLE, ETC.

** PERCENT REDUCTION IN LENGTH OF STANDARD TRENCH (TYPE-1) ALLOWED.

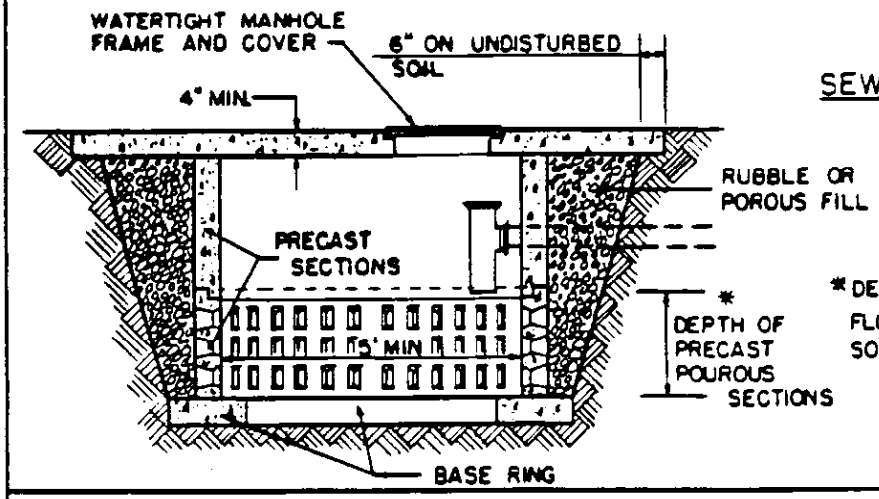

SEWAGE ABSORPTION PIT TYPICAL SECTION

* DEPTH OF PIT IS A FUNCTION OF FLOW, EFFECTIVE AREA OF POROUS SOIL LAYER AND PERCOLATION RATE

NOT TO BE USED IN PROJECT SPECIFICATIONS			SKETCH
DRAWN: ROBERT POKOJ DTNSRDC (A)	APPROVED: PE:	DATE: NOV. 5, 1984	02302-4

LAYING CONDITIONS FOR CONCRETE PIPE

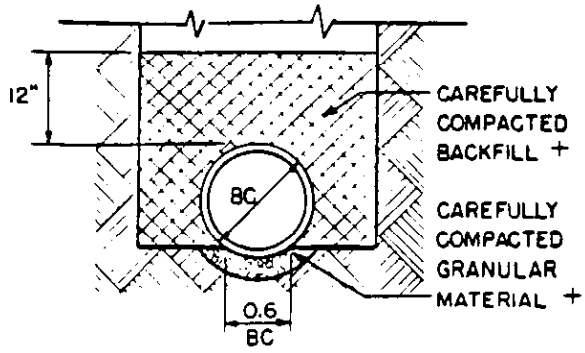

SHAPED BOTTOM WITH TAMPED BACKFILL
LOAD FACTOR 1.9

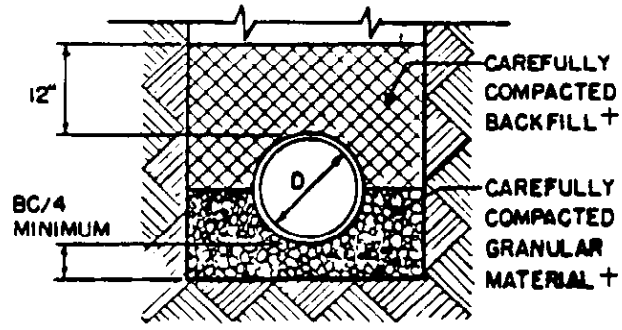

COMPACTED GRANULAR BEDDING
LOAD FACTOR 1.9

CLASS B

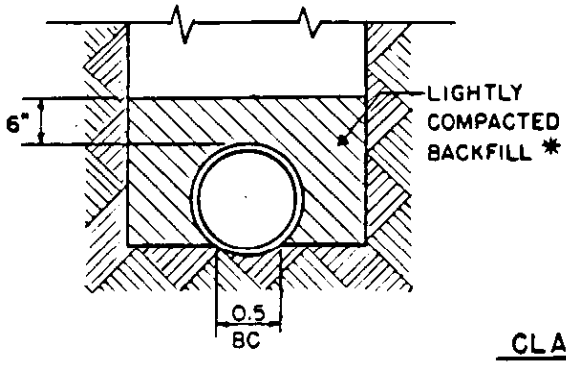

SHAPED BOTTOM, LOAD FACTOR 1.5
NOT RECOMMENDED

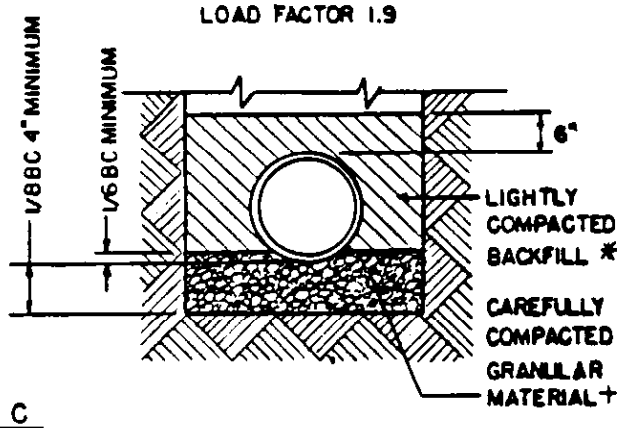

COMPACTED GRANULAR BEDDING
LOAD FACTOR 1.5

CLASS C

NOTES:

- CLASS A - CONCRETE CRADLE OR ARCH LOAD FACTOR 2.2 (PLAIN) TO 3.4 (REINFORCED)
- BACKFILL INDICATED IS INITIAL BACKFILL. FINAL BACKFILL TO BE IN ACCORDANCE WITH OTHER SPECIFIED REQUIREMENTS.
- IN ROCK TRENCH, EXCAVATE AT LEAST 6 INCHES BELOW THE COUPLING OF THE PIPE EXCEPT WHERE CONCRETE CRADLE IS USED.

* LIGHTLY COMPACTED BACKFILL: 85-95% STANDARD PROCTER (ASTM D698) OR 40-70% RELATIVE DENSITY

\+ CAREFULLY COMPACTED BACKFILL OR GRANULAR MATERIAL 95% STANDARD PROCTOR (ASTM D698) OR 70% RELATIVE DENSITY

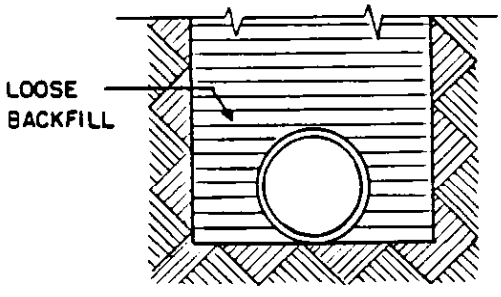

CLASS D

FLAT BOTTOM, LOAD FACTOR 1.1
IMPERMISSIBLE BEDDING
NOT RECOMMENDED

NOT TO BE USED IN PROJECT SPECIFICATIONS

DRAWN: ROBERT POKOJ DTNSRDC (A)	APPROVED: James H. Heath, PE	DATE: DEC. 28, 1984	SKETCH 02302-5

TYPICAL CONCRETE PIPE ENCASEMENT

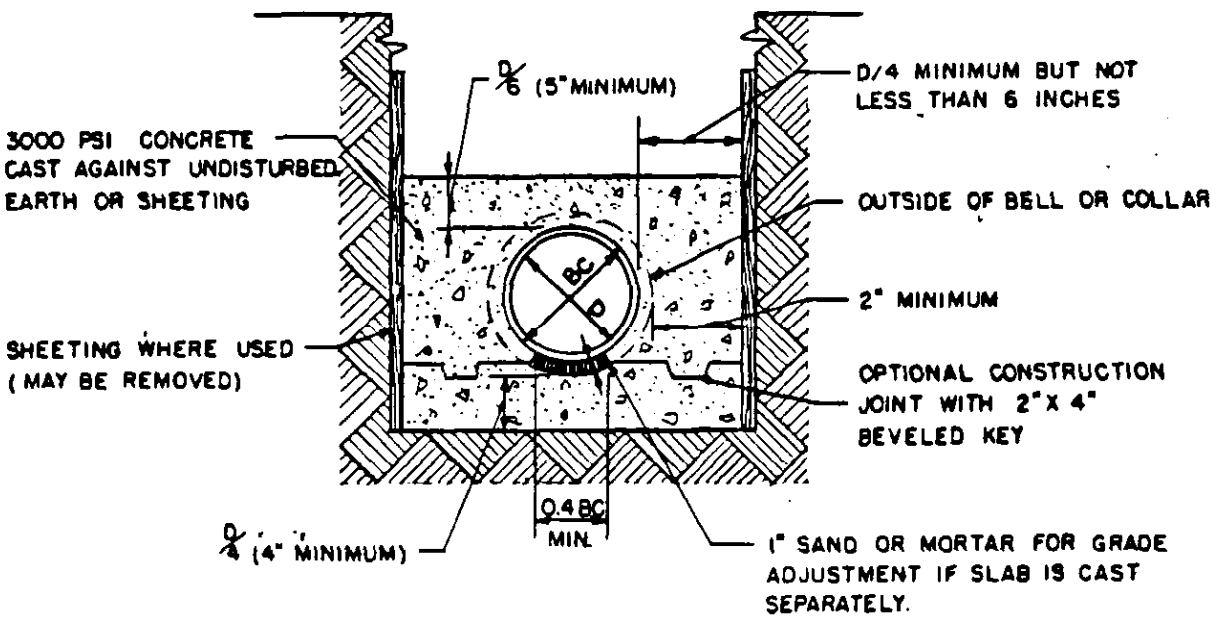

NOT TO BE USED IN PROJECT SPECIFICATIONS			SKETCH
DRAWN: ROBERT POKOJ DTNSRDC (A)	APPROVED: James A. Sutton, PE	DATE: DEC. 28, 1984	02302-6