CONCRETE CRADLES & ARCHES

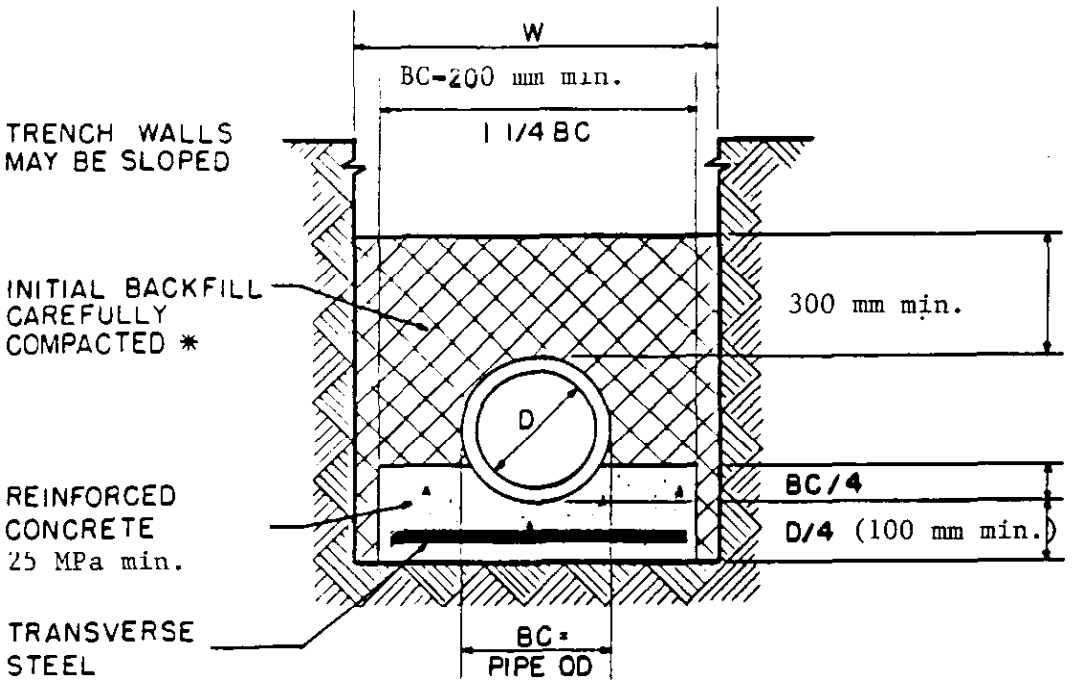

CONCRETE CRADLE

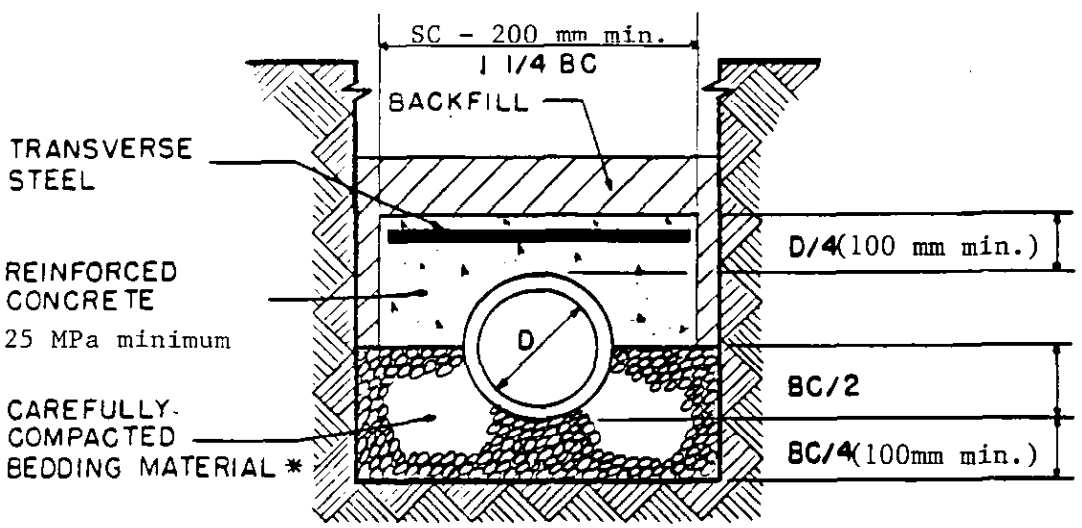

CONCRETE ARCH

* CAREFULLY COMPACTED BACKFILL OR GRANULAR MATERIAL: 95% STANDARD PROCTOR (ASTM D-698) OR 70% RELATIVE DENSITY.

NOT TO BE USED IN PROJECT SPECIFICATIONS				SKETCH 02302-2
DRAWN:	ROBERT POKOJ DTNSRDC (A)	APPROVED: James K Yates, PE	DATE: NOV. 5, 1984	

LAYING CONDITIONS FOR DUCTILE AND CAST IRON PIPE

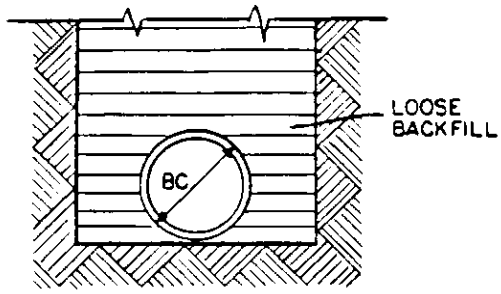

TYPE 1

FLAT BOTTOM TRENCH. LOOSE BACKFILL.

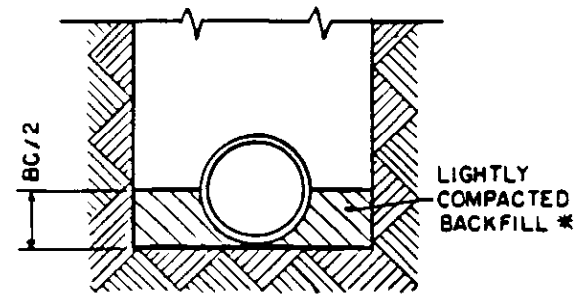

TYPE 2

FLAT BOTTOM TRENCH. BACKFILL LIGHTLY CONSOLIDATED TO CENTER LINE OF PIPE.

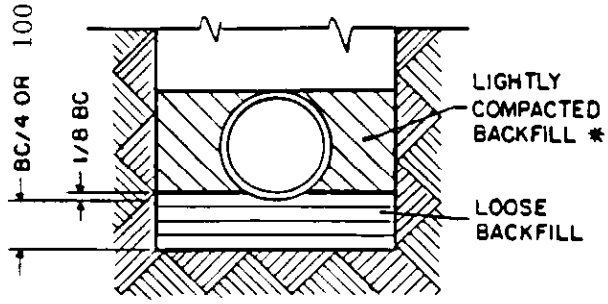

TYPE 3

LOOSE SOIL BEDDING. BACKFILL LIGHTLY CONSOLIDATED TO TOP OF PIPE.

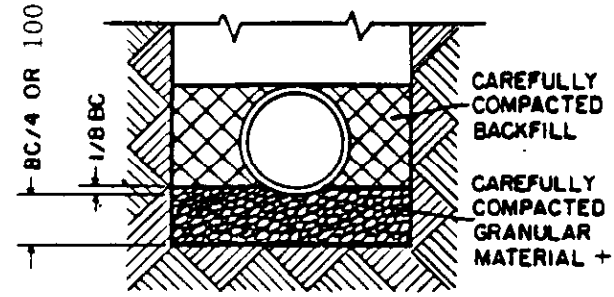

TYPE 4

COMPACTED GRANULAR BEDDING. CAREFULLY COMPACTED BACKFILL TO TOP OF PIPE.

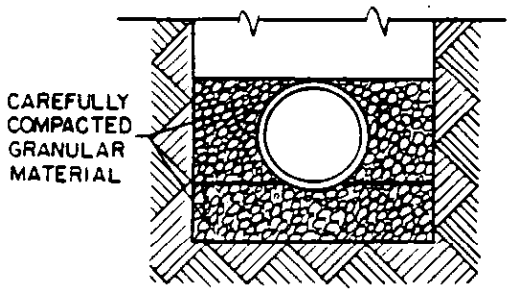

TYPE 5

COMPACTED GRANULAR BEDDING AND GRANULAR BACKFILL TO TOP OF PIPE

NOTE: BACKFILL INDICATED IS INITIAL BACKFILL. FINAL BACKFILL TO BE IN ACCORDANCE WITH OTHER SPECIFIED REQUIREMENTS.

* LIGHTLY COMPACTED BACKFILL: 85-95% STANDARD PROCTOR (ASTM D698) OR 40-70% RELATIVE DENSITY

\+ CAREFULLY COMPACTED BACKFILL OR GRANULAR MATERIAL: 95% STANDARD PROCTOR (ASTM D698) OR 70% RELATIVE DENSITY.

NOT TO BE USED IN PROJECT SPECIFICATIONS			SKETCH
DRAWN: ROBERT POKOJ DTNSRDC (A)	APPROVED P.E.	DATE: NOV. 5, 1984	02302-1

LAYING CONDITIONS FOR THERMOPLASTIC PIPE

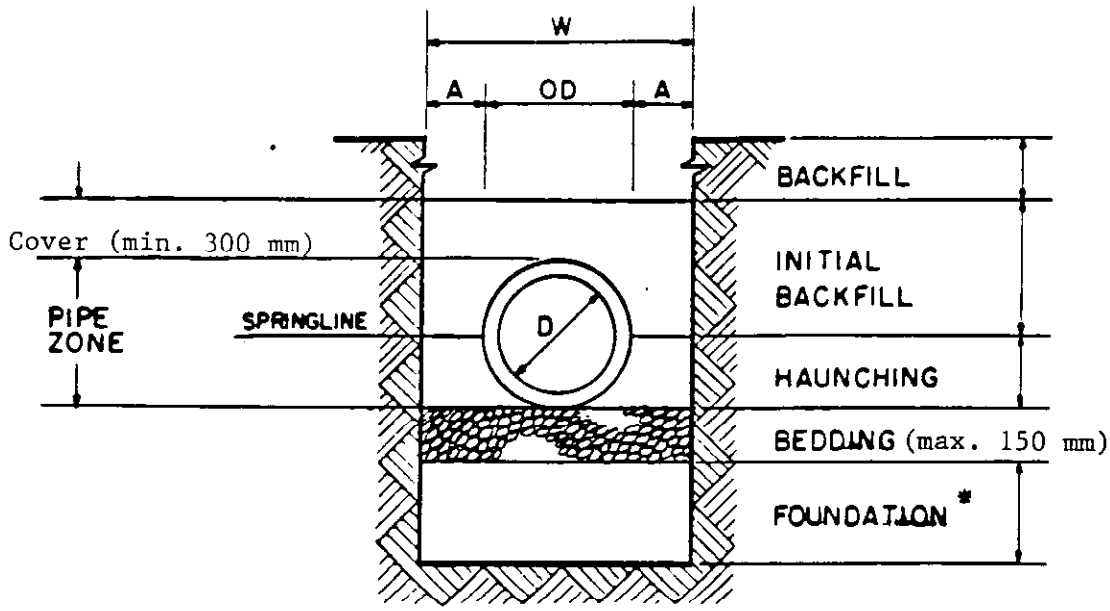

* FOUNDATION IS REQUIRED FOR OVER-EXCAVATION AND UNSTABLE TRENCH BOTTOM CONDITIONS. SEE ASTM D-2321.

TRENCH WIDTHS ALL PIPE

PIPE DIA. O"	MAXIMUM "A"
13 mm to 100 mm	consult manufacturer
150 mm to 375 mm	200 mm
450 mm to 525 mm	250 mm
600 mm to 750 mm	300 mm
825 mm to 1050 mm	375 mm
1050 mm larger	450 mm

NOT TO BE USED IN PROJECT SPECIFICATIONS			SKETCH
DRAWN: ROBERT POKOJ DTNSRDC (A)	APPROVED: P.E.	DATE: NOV. 5, 1984	02302-3

SEWAGE ABSORPTION TRENCH

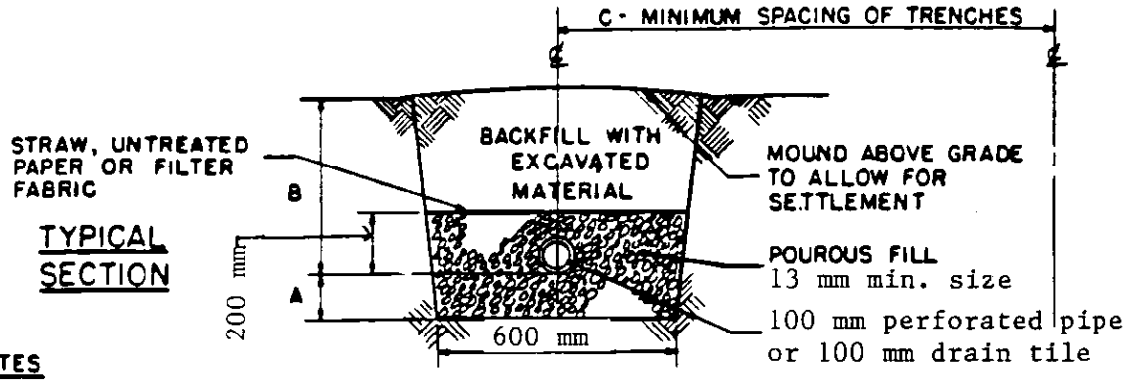

NOTES

1. PROVIDE DITCHES AS NECESSARY TO DIVERT SURFACE RUNOFF FROM ENTERING ABSORPTION FIELD.
2. DESIGN STANDARD TRENCH ACCORDING TO PERCOLATION RATE AND LOCAL CODE REQUIREMENTS. SINCE THE LARGEST POSSIBLE "A" DIMENSION IS PREFERRED, SELECT TYPE TO BE USE AND % REDUCTION IN LENGTH OF STANDARD TRENCH (TYPE-1) ALLOWED FROM TABLE BELOW.

	TYPE	A*	B	C	%** REDUCTION
STANDARD →	1	150mm	900mm	1.8m	0
	2	300mm	"	"	20
	3	450mm	"	"	34
	4	600mm	"	"	43
	5	750mm	"	"	50
	6	900mm	"	"	56
	7	1050mm	"	"	60

* THE LARGEST POSSIBLE "A" DIMENSION-DEPTH OF GRAVEL BELOW PIPE IS PREFERRED SELECTION SHOULD BE BASED ON SOIL CONDITION, DEPTH OF WATER TABLE, ETC.

** PERCENT REDUCTION IN LENGTH OF STANDARD TRENCH (TYPE-1) ALLOWED.

SEWAGE ABSORPTION PIT TYPICAL SECTION

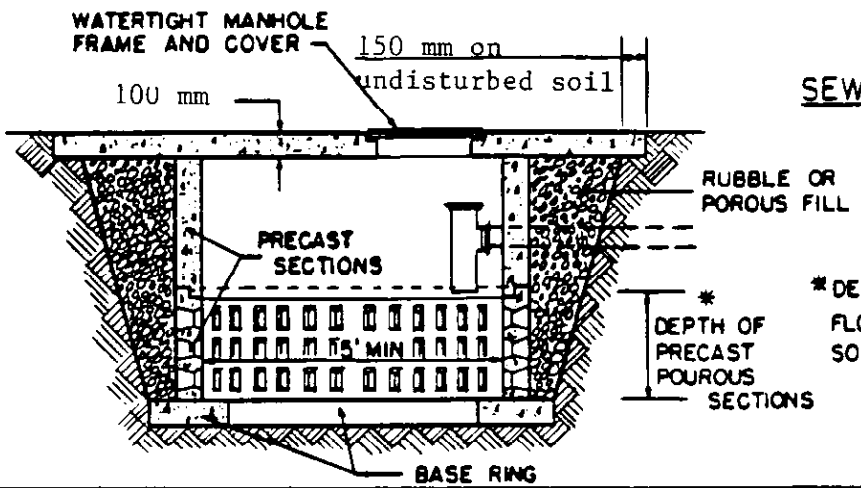

* DEPTH OF PIT IS A FUNCTION OF FLOW, EFFECTIVE AREA OF POROUS SOIL LAYER AND PERCOLATION RATE

NOT TO BE USED IN PROJECT SPECIFICATIONS			SKETCH
DRAWN: ROBERT POKOJ DTNSRDC (A)	APPROVED: PE:	DATE: NOV. 5, 1984	02302-4

LAYING CONDITIONS FOR CONCRETE PIPE

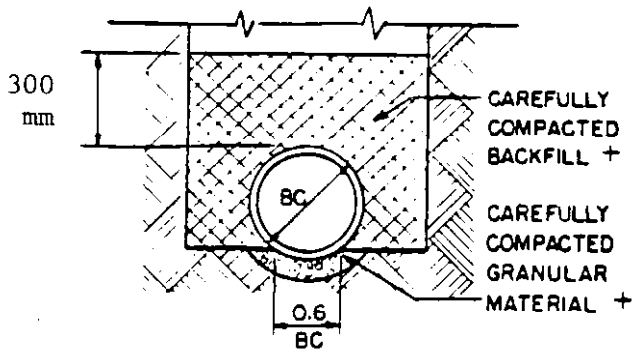

SHAPED BOTTOM WITH TAMPED BACKFILL
LOAD FACTOR 1.9

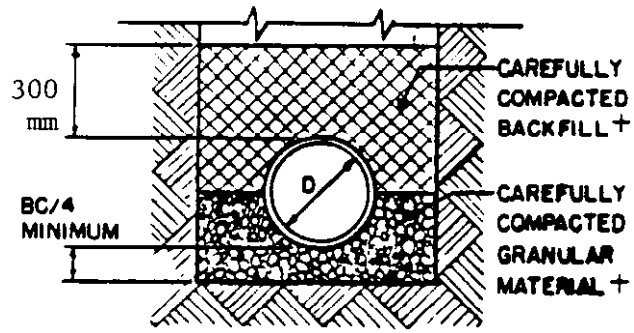

COMPACTED GRANULAR BEDDING
LOAD FACTOR 1.9

CLASS B

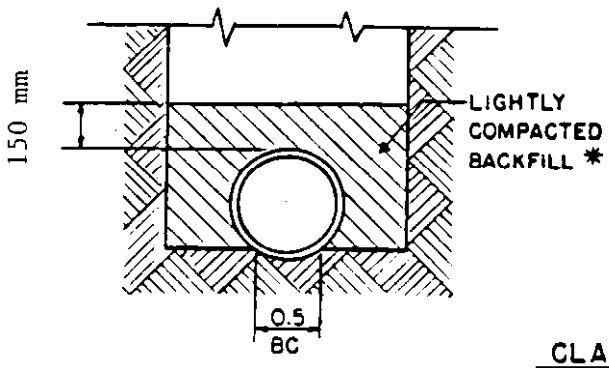

SHAPED BOTTOM, LOAD FACTOR 1.5
NOT RECOMMENDED

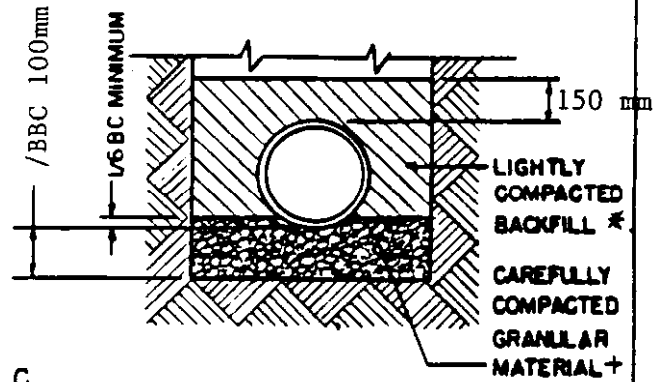

CLASS C

COMPACTED GRANULAR BEDDING
LOAD FACTOR 1.5

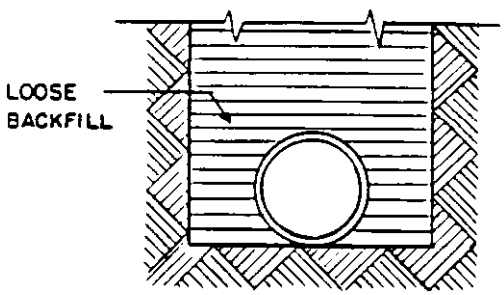

CLASS D

FLAT BOTTOM, LOAD FACTOR 1.1
IMPERMISSIBLE BEDDING
NOT RECOMMENDED

NOTES:

- CLASS A - CONCRETE CRADLE OR ARCH LOAD FACTOR 2.2 (PLAIN) TO 3.4 (REINFORCED)
- BACKFILL INDICATED IS INITIAL BACKFILL. FINAL BACKFILL TO BE IN ACCORDANCE WITH OTHER SPECIFIED REQUIREMENTS.
- IN ROCK TRENCH, EXCAVATE AT LEAST 150 mm BELOW THE COUPLING OF THE PIPE EXCEPT WHERE CONCRETE CRADLE IS USED.

* LIGHTLY COMPACTED BACKFILL: 85-95% STANDARD PROCTER (ASTM D698) OR 40-70% RELATIVE DENSITY

\+ CAREFULLY COMPACTED BACKFILL OR GRANULAR MATERIAL 95% STANDARD PROCTOR (ASTM D698) OR 70% RELATIVE DENSITY

NOT TO BE USED IN PROJECT SPECIFICATIONS

DRAWN: ROBERT POKOJ DTNSRDC (A)	APPROVED: James A. Smith PE	DATE: DEC. 28, 1984	SKETCH 02302-5

TYPICAL CONCRETE PIPE ENCASEMENT

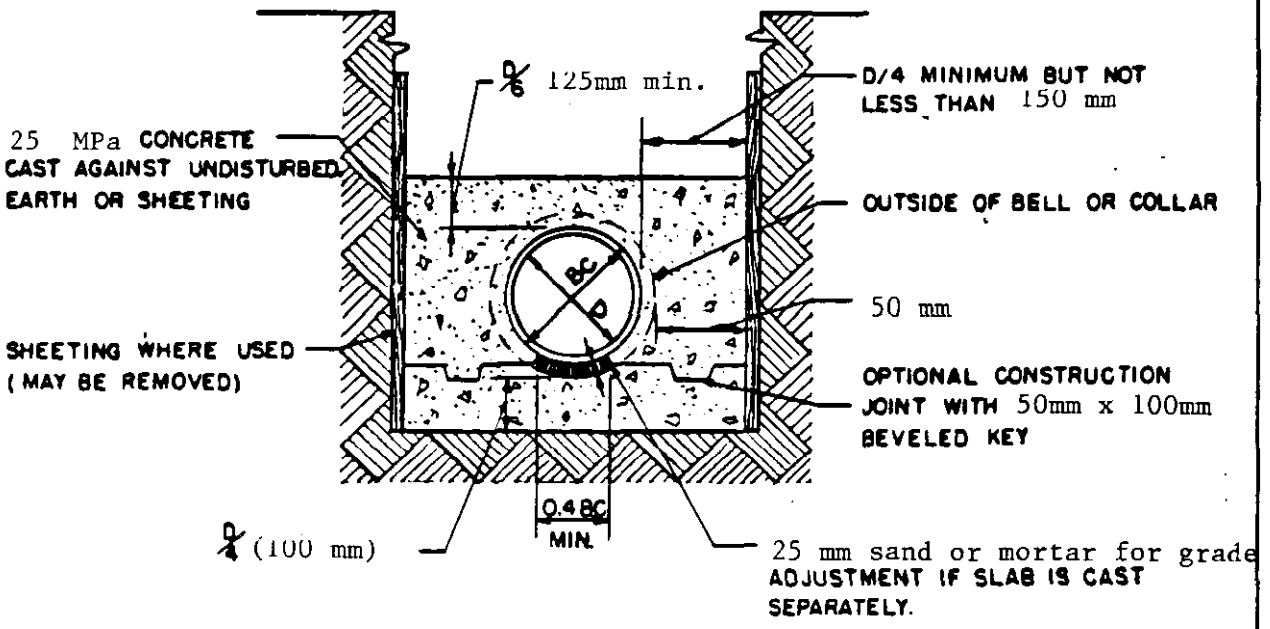

NOT TO BE USED IN PROJECT SPECIFICATIONS			SKETCH
DRAWN: ROBERT POKOJ DTNSROC (A)	APPROVED: , PE	DATE: DEC. 28, 1984	02302-6