ARMY TM 5-683
NAVY NAVFAC MO-116
AIR FORCE AFJMAN 32-1083

FACILITIES ENGINEERING
ELECTRICAL INTERIOR FACILITIES

APPROVED FOR PUBLIC RELEASE: Distribution is unlimited

DEPARTMENTS OF THE ARMY, THE NAVY, AND THE AIR FORCE
NOVEMBER 1995

REPRODUCTION AUTHORIZATION/RESTRICTIONS

This manual has been prepared by or for the Government and is public property and not subject to copyright.

Reprints or republication of this manual should include a credit substantially as follows: "Joint Departments of the Army, the Navy and the Air Force, USA, Technical Manual TM 5-683/NAVFAC MO-116/AFJMAN 32-1083, Electrical Interior Facilities, 30 November 1995.

TM 5-683
NAVFACMQ-116
AFJMAN 32-1083

TECHNICAL MANUAL NO. 5-683
NAVY MANUAL NAVFAC MO-116

AIR FORCE MANUAL AFJMAN 32-1083

HEADQUARTERS
DEPARTMENT OF THE ARMY,
THE NAVY, AND THE AIR FORCE
WASHINGTON, DC, 30 November 1995

ELECTRICAL INTERIOR FACILITIES

		Paragraph	Page
CHAPTER 1.	INTRODUCTION		
	Purpose and scope	1–1	1–1
	References	1-2	1-1
	Codes and specifications	1-3	1–1
	Maintenance requirements	1-4	1-1
	Records	1-5	1-1
	Priority and scheduling	1-6	1-2
	Hazards	1-7	1-2
2.	SWITCHGEAR ASSEMBLIES 600V OR LESS		
	Periodic maintenance	2-1	2-1
	Metal enclosures	2-2	2-1
	Bus bar and terminal connections	2-3	2-2
	Under floor ducts	2-4	2-2
	Busways	2-5	2-2
	Power circuit breakers	2-6	2-3
	Network protectors	2-7	2-10
	Auxiliary switch gear equipment	2-8	2-12
	Switchgear trouble-shooting	2-9	2-16
3.	TRANSFORMERS		
	Small power transformers	3-1	3-1
	Dry-type transformers	3-2	3-1
4.	ELECTRIC MOTORS		
	Maintenance of electric motors	4-1	4-1
	Alternating current (AC) motors	4-2	4-1
	Direct current (DC) motors	4-3	4-13
	Motor operating considerations	4-4	4-20
	Motor insulation testing	4-5	4-24
	Motor trouble-shooting	4-6	4-24
5.	MOTOR CONTROLS		
	Functions o motor controls	5-1	5-1
	Types of motor controls	5-2	5-1
	Components and maintenance of motor controls	5-3	5-6
	Preventive maintenance and trouble-shooting guide	5-4	6-15
6.	POWER CABLES		
	Components	6-1	6-l
	Visual inspection	6-2	6-l
	Cable insulation testing	6-3	6-1
	Over potential testing	6-4	6-2
	Cable trouble-shooting	6-5	6-5
7.	SOLID-STATE ELECTRONIC EQUIPMENT		
	Solid-state maintenance	7–1	7–1
	Solid-state components	7-2	7-1
	Electrical disturbances (power quality)	7-3	7-7
	Disturbance measurement and monitoring	7-4	7-7
	Voltage surge suppression	7-5	7-8
8.	GROUNDING		
	Ground maintenance	8-l	8-1
	Types of grounding systems	8-1	8-1
	Ground fault interrupting methods	8-3	8-9

*This manual supersedesTM 5-683/NAVFAC MO-116/AFM 91-17, dated 2 March 1972

	Paragraph	Page
CHAPTER 9. ILLUMINATION		
Lighting maintenance	9-1	9-1
Fluorescent lighting	9-2	9 1
Incandescent lighting	9-3	9-1
High intensity discharge lighting (HID)	9-4	9-2
Cleaning	9-5	9-4
Relamping	9-6	9-4
Lamp trouble-shooting	9-7	9-5
10. BACK-UP, SECURITY, AND PROTECTION SYSTEMS		
Other systems	10-1	10-1
Emergency and stand-by systems	l0-2	10-1
Signal systems	10-3	10-1
Detection systems	10-4	10-1
Monitoring systems	10-5	l0-5
11. HAZARDOUS SUBSTANCES		
Environmental protection	11-1	11-1
Polychlorinated biphenyls (PCBs)	11-2	11-1
Lighting ballast	11-3	11-3
Flammable liquids and gasses	11-4	11-3
Toxic materials	11-5	11-3
12. ELECTRICAL SAFETY		
Human factor	12-1	12-1
Equipment isolation	12-2	12-1
Switchgear	12-3	12-3
Capacitors	12-4	12-4
Rotating equipment	12-5	12-4
Transformers	12-8	12-5
Wiring and testing	12-7	12-5
Mechanical	12-8	12-5
Danger warnings and fire	12-9	12-5
Personal protective equipment	12-10	12-5
13. TEST EQUIPMENT		
Equipment maintenance	13-1	13-1
Volt-ohm-milliammeter (VOM)	13-2	13-1
Clamp-on volt-ammeter	13-3	13-4
Megohmmeter	13-4	13-6
Harmonic measurements	13-5	13-8
Maintenance equipment guide	13-8	13-9
14. TEST METHODS		
Test evaluation	14-1	14-1
Insulation testing	14-2	14-1
Protective relay testing	14-3	14-3
Equipment ground resistance testing	14-4	14-5
System ground resistance testing	14-5	14-5
Battery specific gravity test	14-6	14-7
Infrared inspection	14-7	14-7
15. MAINTENANCE SCHEDULES		
Personnel	15-1	15-1
Responsibilities	15-2	15-1
Frequencies and procedures	15-3	15-1.
APPENDIX A. REFERENCES		A–1

LIST OF FIGURES

	Page
Figure 2–1. Typical busway installation	2-4
2-2. Drawout circuit breaker positions	2-5
2–3. Power circuit breaker main and arcing contacts	2-8
2-4. Arcing contact gap and wipe	2-7
2–5. Intermediate contact gap	2-8
2-8. Main contact wipe	2-9
2-7. Electromechanical trip device time-current curve	2-11
2–8. Typical drawout network protector and enclosure	2-13
2–9. Network protector removable unit	2-13
2-10. Typical contact construction for a network protector	2-14

LIST OF FIGURES (cont'd)

		Page
Figure	2–11. Large cell for a stationary battery	2-15
	3-1. Dry-type transformer	3-2
	4-1. Cutaway view of squirrel-cage induction motor	4-8
	4-2. Cutaway view of wound-rotor induction motor	4-9
	4-3. Cutaway view of synchronous motor	4-10
	4-4. Primary parts of an AC induction motor	4-10
	4-5. Cleaning and drying motors in place	4-11
	4-6. Bearing installation precautions	4-12
	4-7. Construction of ball and roller bearings	4-14
	4-8. Greasing bearings	4-15
	4-9. Typical sleeve bearings	4-16
	4-10. Cutaway view of a typical DC motor	4-16
	4-11. Main types and connections of DCmotors	4-17
	4-12. Armature of a large DC motor on stands	4-18
	4-13. Inspecting and installing brushes on a large DC motor	4-18
	4-14. Cutaway section of a commutator	4-19
	4-15. Brush "chatter"action	4-20
	4-16. Poor commutator conditions	4-21
	4-17. Good commutator films..	4-22
	4-18. Example of eccentric commutator	4-22
	4-19. Dial gauge to measure commutator concentricity	4-22
	4-20. Common undercutting mistakes	4-23
	4-21. Connections for testing motor insulation resistance	4-25
	5-1. Manual starters	5-2
	5-2. Typical magnetic starter	5-2
	5-3. Combination starters in NEMA enclosures	5-3
	5-4. Coordination of motor overload relay and current limiting fuse	5-4
	5-5. Autotransformer starter	5-5
	5-6. Resistance starter	5-6
	5-7. Part-Winding starter	5-7
	5-8. Solid State starter	5-8
	5-9. Typical motor control center	5-9
	5-10. Cutaway view of typical molded case circuit breaker	5-1o
	5-11. Molded case circuit breaker time-current curve	5-11
	5-12. Fuse maintenance practices	5-12
	5-13. Underwriters' Laboratories Cartridge fuse classification	5-13
	5-14.Typica l thermal overload	5-14
	5-15. Typical heater selection table for thermal overload device	5-15
	5-16. A NEMA size 6 magnetic contactor (courtesy of Siemens-Allis)	5-16
	6-1. Connections for testing low voltage cable insulation	6-2
	7–1. Typical capacitor types	7-3
	7-2. Diodes and SCR's	7–5
	7–3. Characteristics of diodes and Zeners	7-6
	7-4. Testing Zener voltage	7-6
	7–5. Transistor testing	7-8
	8-1. Typical equipment ground	8-3
	8-2. Typical grounding system for a building and its apparatus	8-4
	8-3. Methods of system grounding	8-5
	8-4. Methods o fsolidly grounding the neutral of three-phase systems	8-6
	8-5. Methods of resistance grounding the neutral of three-phase systems	8-6
	8-8. Grounding for electronic and ADP systems..	8-10
	8-7. Ground fault circuit interrupter operation	8-13
	9-1. Preheat fluorescent lamp andfixture components	9-2
	9-2. Mercury lamp	9-3
	9-3. Trouble-shooting fluorescent lighting	9-4
	10-1. Sample computer-based fire detection system	10-2
	10-2. Class A and B fire detection circuits	10-3
	12–1. Padlock and multiple lock adapter	12–2
	12–2. Typical safety tag	12–2
	12–3. Ground cable	12–3
	12-4. Grounding clamps	12-4
	12–5. Eye and face protection selection guide..	12-6
	13-1. Set-up for measuring AC voltage	13-4
	13-2. Set-up for measuring resistance	13-5

LIST OF FIGURES (cont'd)

			Page
Figure	13-3.	Set-up for testing phase sequence	13-6
	13-4.	Megohmmeter	13-7
	13-5.	Diagram of megohmmeter connections	13-7
	14-1.	Comparison of water flow with electric current	14-2
	14-2.	Curves showing components of measured current during insulation testing	14-2
	14-3.	Typical curves showing dielectric absorption effect in a time-resistence or double-reading test	14-3
	14-4.	Resistive components of a made electrode	14-5
	14-5.	Soil resistivity vs moisture content of red clay soil	14-5
	14-6.	Soil resistance vs temperature of clay soil	14-6
	14-7.	Soil resistance vs depth of electrode	14-6
	14--6.	Earth electrode with hemispheres	14-6
	14-9.	Fall-of-potential method graph	14-7
	14-10.	Sampling the cell electrolyte	14-s
	14-11.	Reading the hydrometer float	14-9

LIST OF TABLES

			Page
Table	2-1.	U.S. standard bolt torgues for bus connections heat treated steel	2-3
	2-2.	Trouble-shooting procedures for switchgear equipment	2-17
	4-1.	Motor application guide	4-2
	4-2.	Nameplate voltage ratings of standard induction motors	4-24
	4-3.		4-26
	4-4.	AC synchronous motor trouble-shooting	4-33
	4-5.	DC motor generator trouble-shooting	4-36
	5-1.	Motor control preventative maintenance guide	5-17
	5-2.	Motor control trouble-shooting chart	5-19
	6-1.	Conductor sizes, insulation thickness, test voltages	6-6
	6-2.	Cable maintenance overheating problems	6-7
	7–1.	Power quality problems summary	7–9
	9-1.	Lamp trouble-shooting guide	9-6
	10-1.	Comparison of fire detectors	10-4
	11–1.	Common trade names for PCB by manufacturers	11–2
	13-1.	Tools and equipment for effective electrical maintenance	12-2
	14-1.	Interpreting insulation resistance test results	14-3
	14-2.	Condition of insulation indicated by dielectric absorption ratios	14-4
	15-1.	Percentage of failure cause since maintained	15-2
	15-2.	Equipment failure rate multipliers vereus maintenance quality	15-2
	15-3.	Interior wiring and lighting system	15-3
	1.54.	Electric motors and controls	15-5

CHAPTER 1

INTRODUCTION

1-1. Purpose and scope.

This manual provides guidance to facilities maintenance personnel in the maintenance of interior electrical systems of 600 volts and less. These systems include such components as illumination, low voltage systems, rotating equipment, motor control centers, solid-state equipment, transformers, and switchgear. It also applies to low voltage controlled devices on high-voltage systems. The procedures presented in this manual are basic and can be applied to the equipment of any manufacturer. Detailed information and instructions should be obtained from the instruction book for the particular type of equipment being serviced.

1-2. References.

Appendix A contains a list of references used in this manual.

1-3. Codes and specifications.

Maintenance on electrical systems and equipment must adhere to the codes and specifications as they apply to the work to be performed. Also, manufacturers' maintenance instructions which accompany select electrical components must be applied in conjunction with the codes and specifications listed below and the departmental specifications listed in appendix A.

a. The National Electrical Code [National Fire Protection Association #70 (NFPA 70)]. This code is the most widely adopted set of electrical safeguarding practices. It defines approved types of conductors and equipment, acceptable wiring methods, mandatory and advisory rules, operating voltages, limitations on loading of conductors, required working spaces, methods of guarding energized parts, interrupting capacity requirements of system protective and control devices, requirements for connections and splices, insulation resistance requirements, and grounding requirements.

b. Recommended Practice for Electrical Equipment Maintenance (NFPA 70 B).

c. American National Standards Institute/ Institute of Electrical and Electronics Engineers Standard (ANSI/IEEE Std.) chapter 15, 242-1986, IEEE Recommended Practice for Protection and Coordination of Industrial and Commercial Power Systems. This code provides preventive maintenance practices for electrical systems and equipment used in industrial-type applications.

1-4. Maintenance requirements.

Preventive maintenance should not be confused with repairs after a breakdown. The definition of maintenance implies that the equipment or system is inspected to discover its weaknesses and then repair or replace the necessary elements before a breakdown occurs. A maintenance program for protective devices and the electric system could be divided into the following steps: inspecting, cleaning, tightening, lubricating, testing, and recording.

a. The effectiveness of the distribution system is measured in terms of voltage regulation, power factor, load balance, reliability, efficiency of operation, and costs. To ensure the system's efficiency, lessen failures, and maximize safety, an effective maintenance program must be employed. This program should include and/or consider the following:

(1) Scope of work.

(2) Intervals of performance.

(3) Methods of application.

(4) Safety requirements, practices and procedures.

(5) Adherence to codes, specifications and directives.

(6) Maintenance management procedures regarding tools, records, and follow-up procedures.

(7) Hazards associated with work and the facility.

(8) Emergency operating instructions.

(9) Requirements for periodic review to determine additional loading in circuits such as in family housing, bachelor quarters, and maintenance and administrative buildings.

b. A well executed maintenance program will provide benefits in terms of:

(1) Economic operation.

(2) Improved safety.

(3) Longer equipment life.

(4) Reduced repair and overhaul time.

(5) Fewer unplanned outages.

(6) Early detection of undesirable changes in the power system.

(7) Improved operation of the facility.

1-5. Records.

A good record keeping system is essential for safe, efficient and economical operation of electrical facilities and for planning and executing an effective

preventive maintenance program. It is recommended to use the Work Information Management System (WIMS) or other data-automated systems to keep records rather than paperwork files. Suitable forms and reports requirements should be developed to suit local needs. When facilities are built, instruction documents and spare parts lists for all equipment installed should be obtained prior to beneficial occupancy acceptance.

a. In addition to charts, work orders, and real property records, the following records have been found useful in analysis and correction of recurring trouble areas.

(1) *Diagrams.* Accurate single-line and schematic diagrams of the distribution system should be readily accessible in the electrical shop. These are essential references when switching circuits and rerouting electric power in emergencies. Such diagrams also provide a simple means of locating facilities and determining the characteristics of electric supply to buildings requiring maintenance. Electrical personnel must have access to latest "as-built" building drawings for use in tracing out circuitry within buildings.

(2) *Equipment lists/logs.* These lists should be maintained on all items of equipment such as motors, motor controllers, meters, panelboards, electrical controls, and switchgear. Lists should reflect detailed information such as the density of all like items, item ratings and physical locations. Lists/logs will facilitate scheduling of inspections and maintenance services.

(3) *Equipment maintenance records.* These records should be maintained on every individual item of electrical equipment that requires maintenance services. Records should include detailed information such as scheduled maintenance and inspection requirements, previous test results, maintenance repairs performed and any other related information that would facilitate analyzing the equipment performance. Maintenance records should be retained on file for as long as needed to allow collection of sufficient data to perform the equipment performance analyses. By observing the equipment performance, downward trends can be identified and problem areas corrected before major breakdowns occur.

(4) *Emergency operating instructions.* Emergency operation of electrical facilities is safer and quicker when instructions are prepared and posted in advance. There should be instructions for each general type of anticipated emergency, stating what each employee in the electrical section should do, setting up alternatives for key personnel, and establishing follow-up procedures for use after an emergency has passed. Instructions should be posted in the electrical shop, security guard office, all emergency generating or operating areas, and other locations as the responsible supervisor deems necessary. Employees should be listed by name, title, official telephone number, home address and home telephone number (where permissible). These instructions should emphasize safety under conditions of stress, power interruptions and similar emergencies.

1-6. Priority and scheduling.

In regard to the support of the installed physical facilities, it is the policy of the Military Departments that, in order of priority, maintenance should be second only to operations. It must be systematic and timely. Subsequent sections in this document provide generaI suggestions on service frequencies and procedures. Although these proposed actions and frequencies may appear to be excessive, these suggestions are based upon experience and equipment manufacturers' recommendations. They are not intended to supersede instructions that electrical manufacturers normally provide. Every realistic effort should be made to adhere to these suggestions considering existing manpower levels and available test equipment. It is generally good practice to inspect equipment three to six months after it is first put into service and then to inspect and maintain it every one to three years, depending on its service and operating conditions. Conditions that make frequent maintenance and inspection necessary are:

a. High humidity and high ambient temperature.
b. Corrosive atmosphere.
c. Excessive dust and dirt.
d. High repetitive duty.
e. Frequent fault interruption.
f. Older equipment.

1-7. Hazards.

Material specifications, construction criteria, installation standards, and safe working procedures should be applied to minimize hazards. All work should be performed by qualified electricians and conform to the latest accepted procedures and standards.

a. Building electrical systems. Fire and safety hazards in building electrical systems often result from tampering by unqualified personnel. Probably the greatest example of tampering is the unauthorized changing or replacing of fuses. Careful observation by maintenance personnel is needed to control excessive use of items such as extension cords, heaters, air conditioners, and improper grounding which cause overloading of the wiring system. Whenever possible, installation of additional receptacles is preferable to the use of extension cords.

Each building should be inspected for loose wires, poor connections, bare conductors, unauthorized or nonstandard attachment cords, use of wiring or fixtures as support for extraneous items, any conditions likely to cause fires and lamps larger than the standard size prescribed for outlets.

b. Hazardous locations. Special occupancy areas include garages, aircraft hangars, gasoline dispensing and service stations, bulk storage plants, and health care facilities. Such areas designed as "Hazards Locations," as specified in Article 500 of the National Electrical Code, require special and equipment considerations. These considerations include the use of special fittings, rigid conduit, and explosion-proof apparatus. Maintenance personnel must ensure that all work performed in a hazardous area complies with the code requirements for the area's particular hazard classification.

CHAPTER 2

SWITCHGEAR ASSEMBLIES 600V OR LESS

2-1. Periodic Maintenance.

A periodic maintenance schedule must be established to obtain the best service from the switchgear. Annual check should be made on all major switchgear devices after installation. After trends have been established regarding the equipment condition and reliability, the maintenance interval may be extended (18–36 months) in keeping with the operating conditions. A permanent record of all maintenance work should be kept. The record should include a list of periodic checks and tests made (including date of test), condition of the equipment, repairs or adjustments performed, and test data that would facilitate performing a trend analysis. Maintenance personnel must follow all recognized safety practices, both the nationally published standards and military regulations. Some specific suggestions in dealing with switchgear maintenance are given below:

a. Tools designed for slowly closing switchgear circuit breakers or other devices during maintenance are not suitable for use on an energized system. The speed necessary for device closing is as important as its speed in opening; therefore, a wrench or other manual tool is not fast enough.

b. Before working on a switchgear enclosure, verify that the enclosure is de-energized by checking for voltage using a voltage detector.

c. Disconnect all drawout or tilt-out devices such as circuit breakers, instrumentation transformers, and control power transformers.

d. Do not lay tools on the equipment while working. It is all too common to forget a wrench when closing up an enclosure. Don't take the chance.

e. Never rely upon the insulation surrounding an energized conductor to provide protection to personnel. Use suitable safety clothing and equipment.

f. Always use the correct maintenance forms and equipment. When performing maintenance the following should be available:

(1) Forms for recording the conditions as found and work done.

(2) Control power connections, test couplers, and spare parts recommended by the manufacturer to facilitate repair and maintenance of each type of circuit breaker.

(3) Special tools, such as lifting mechanisms for removing and transporting power circuit breakers, relay test plugs for testing and calibrating protective relays, a low resistance ohmmeter for measuring the resistance of contacts, ammeters, voltmeters, megohmmeters, low voltage/high current test sets for testing power circuit breakers, and other special test equipment.

(4) Manufacturer's instruction books regarding the maintenance of switchgear devices such as circuit breakers, relays, bus bars, meters, etc. The fundamentals that are presented in the upcoming sections are designed to supplement these instructions, giving the elements of the overall maintenance program rather than the details.

2-2. Metal enclosures.

Maintenance is recommended below:

a. With power off and the bus properly grounded, open the enclosure and remove any accumulated dust and dirt. Vacuum cleaning is recommended; blowing with compressed air is not.

b. Check structure and anchor bolts for tightness. For bus and breaker connections ensure manufacturer's specified torques are used.

c. Clean and lubricate circuit breaker racking mechanisms with a non-hardening, non-conductive grease.

d. Inspect operation and adjustment of safety shutters, mechanical and key interlocks, auxiliary and limit switches.

e. Clean and inspect strip heaters.

f. Clean any air filters that are installed in the ventilation openings.

g. Inspect all relays, contractors, switches, fuses, and other auxiliary devices for correct operation and cleanliness.

h. Tighten control wiring connections.

i. Inspect alignment and contacting of primary disconnecting devices, checking for signs of abnormal wear or other damage. Discoloration of these or other silvered surfaces is not usually harmful unless caused by sulphide deposits, which can be removed by a solvent, such as alcohol, or silver polish.

j. After cleaning, measure the resistance to ground and between phases of the bus with a megohmmeter (para 14-2). It is not possible to give definite limits for satisfactory insulation resistance values, so that a change in the reading from one inspection period to another is the best indication of any weakening tendency. The readings should be taken under similar conditions each time, and the record should include temperature and humidity.

k. Before replacing the breaker, wipe the primary disconnecting device contacts. Apply a thin coat of

contact lubricant to the stationary studs and to the primary disconnects on the breaker.

l. Ensure that all metal shields are securely in place. These shields must be installed to confine any blast in the event of circuit breaker failure.

(1) *A note on lubricants.* One of the most useful lubricants for motors is an extreme pressure (EP) lithium-base petroleum grease. As the usage of Class F winding temperature ratings has increased, however, others have adopted synthetic greases to withstand higher bearing temperatures.

(2) *Synthetic oils and greases.* Synthetic oils and greases compounded from various silicones, alkyl benzene, diesters, and fluorinated ethers, are available for extremely high-temperature service that would cause premature oxidation of petroleum lubricants. Some synthetics also suit extremely low temperature, down to 40 or 50 degrees below zero. The main uses for synthetic lubricants in motor bearings are reduced friction and resistance to moisture and chemical contamination. Such applications must be carefully worked out with bearing and lubricant suppliers, because no universal lubricant formulation will apply to all environments. However, it is not unusual for lubricant to vary little more than brand name. Thus substitutions are often possible. Consult with the manufacturer of the switchgear to determine the important characteristics of the lubricant prior to specifying a substitute lubricant. Carefully selected substitutes will reduce the cost of procurement, stocking and dispensing.

2-3. Bus bar and terminal connections.

Many failures are attributable to improper terminations, poor workmanship, and different characteristics of dissimilar metals. Loose bus bar or terminal connections will cause overheating which can be easily spotted by a discoloration of the bus bar. A thermographic survey can be conducted to detect overheating before discoloration occurs (para 14-7). An overheating condition will lead to deterioration of the bus system as well as to equipment connected to the bus; i.e. protective devices, bus stabs, etc. Therefore, bus bar and terminal connections should be regularly checked to ensure that they are properly tightened without damaging the conductors. Special attention should be given where excessive vibration may cause loosening of bolted bus and terminal connections. Tightening torque values for electrical connections are provided in table 2–1. This information should be used for guidance only where no tightening information on the specific connector is available. It should not be used to replace manufacturer's instructions which should always be followed. Do not assume that once a connection has been torqued to its proper value that it remains tight indefinitely. If signs of arcing are evident, then the connections should be broken and the connecting surfaces cleaned. Because of the different characteristics of copper and aluminum, they should not be intermixed in a terminal or splicing connector where physical contact occurs between them, unless the device is suitable for the purpose and conditions of use. Materials such as solder and compounds shall be suitable for the use and shall be of a type which will not adversely affect the conductors.

a. Aluminum connectors. Special considerations must be given to aluminum connections. Aluminum connectors are plated and should not be cleaned with abrasive. If these connectors are damaged, they should be replaced. It should be noted that when making connections with aluminum conductors, be sure to use a joint compound made for the purpose. To assist in the proper and safe use of solid aluminum wire in making connections to wiring devices, refer to the National Electrical Code. Make aluminum connections with solderless circumferential compression-type, aluminum-bodied connectors UL listed for AL/CU. Remove surface oxides from aluminum conductors by wire brushing and immediately apply oxide-inhibiting joint compound and insert in connector. After joint is made, wipe away excess joint compound and insulate splice.

b. Bus insulators and barriers. Bus bar support insulators and/or barriers should be wiped with a clean cloth. Do not use steel wool or oxide papers to remove dirt; use a cleaning solvent that will not leave trace deposits. While cleaning, check insulators for cracks and signs of arc tracking. Defective units should be replaced. Loose mounting hardware should be tightened.

2-4. Underfloor ducts.

All undefloor duct systems require checks for evidence of oil and water. Entrances and fittings should be checked and corrected as necessary to prevent entrance of liquids, insects, and rodents. Cockroaches, ants, beetles and rodents have been known to attack cable insulation, especially if greases or oils are present. External heat and heat caused by overloaded circuits can cause cracking of cable insulation and drying of taped splices. Moisture can then penetrate the cable and could cause a fault. Therefore, underfloor conduits and duct systems should be kept sufficiently clear of electrical and hot water floor-heating systems to prevent undue heating of the enclosures.

2-5. Busways.

Feeder busway, trolley busway and plug-in busway (fig 2–1) require annual cleaning and removal of oil substances and dirt. Ventilated-type busway should

Table 2–1. U.S. standard bolt torques for bus connections heat treated steel.

GRADE	SAE	SAE	SAE	SAE
	1 & 2	5	6	8
TYPICAL MARKING:				
MINIMUM TENSILE (P.S.I.)	64K	105K	133K	150K
BOLT DIAMETER	TORQUE (FOOT POUNDS)			
1/4	5	7	10	10.5
5/16	9	14	19	22
3/8	15	25	34	37
7/16	24	40	55	60
1/2	37	60	85	92
9/16	53	88	120	132
5/8	74	120	167	180
3/4	120	200	280	296
7/8	190	302	440	473
1.	282	466	660	714

NOTE : REDUCE TORQUE BY 20% WHEN CADMIUM PLATED BOLTS ARE USED.

have the bus bars cleaned annually with clean, dry compressed air at a maximum pressure of 50 pounds per square inch. Plug-in devices should be serviced using the same procedures as other switches or breakers. The plug-in bus or prongs should be checked annually for annealing or corrosion on all connections which are rated in excess to 75 percent of the rating of the bus duct. Connections should not be retorqued as part of a routine maintenance procedure unless visibly loose or shown to be loose by an infrared scan. All busway connections should be torqued according to manufactures recommendations. If this information is not available, use the torque specifications in table 2-1. Inspect to ensure that:

a. Ventilation continues to be adequate.

b. Clearances are maintained and encroachment from other equipment facilities has not occurred.

2-6. Power circuit breakers.

Power circuit breakers encompass all breakers except molded case breakers and breakers used for control applications. It is recommended that power circuit breakers be inspected once a year after installation. More frequent inspections are recommended where severe load conditions, dust, moisture or other unfavorable conditions exist, or if the vital nature of the load warrants it. Any breaker that has interrupted a fault at or near its short circuit rating should be inspected immediately after the interruption and serviced if necessary. Reenergize equipment completely before working on any devices, connections, bus work, breaker or feeder cable compartments. This includes deenergizing any connections to outside primary or secondary sources such as transformers, tie lines, etc. Manufacturer's instruction documents should also be obtained and read carefully before disassembly or adjustments are performed.

a. Drawout circuit breakers. A drawout-type breaker should be tested and inspected for proper operation as follows:

(1) Withdraw the breaker to the "test" position. This position disconnects the primary power circuit

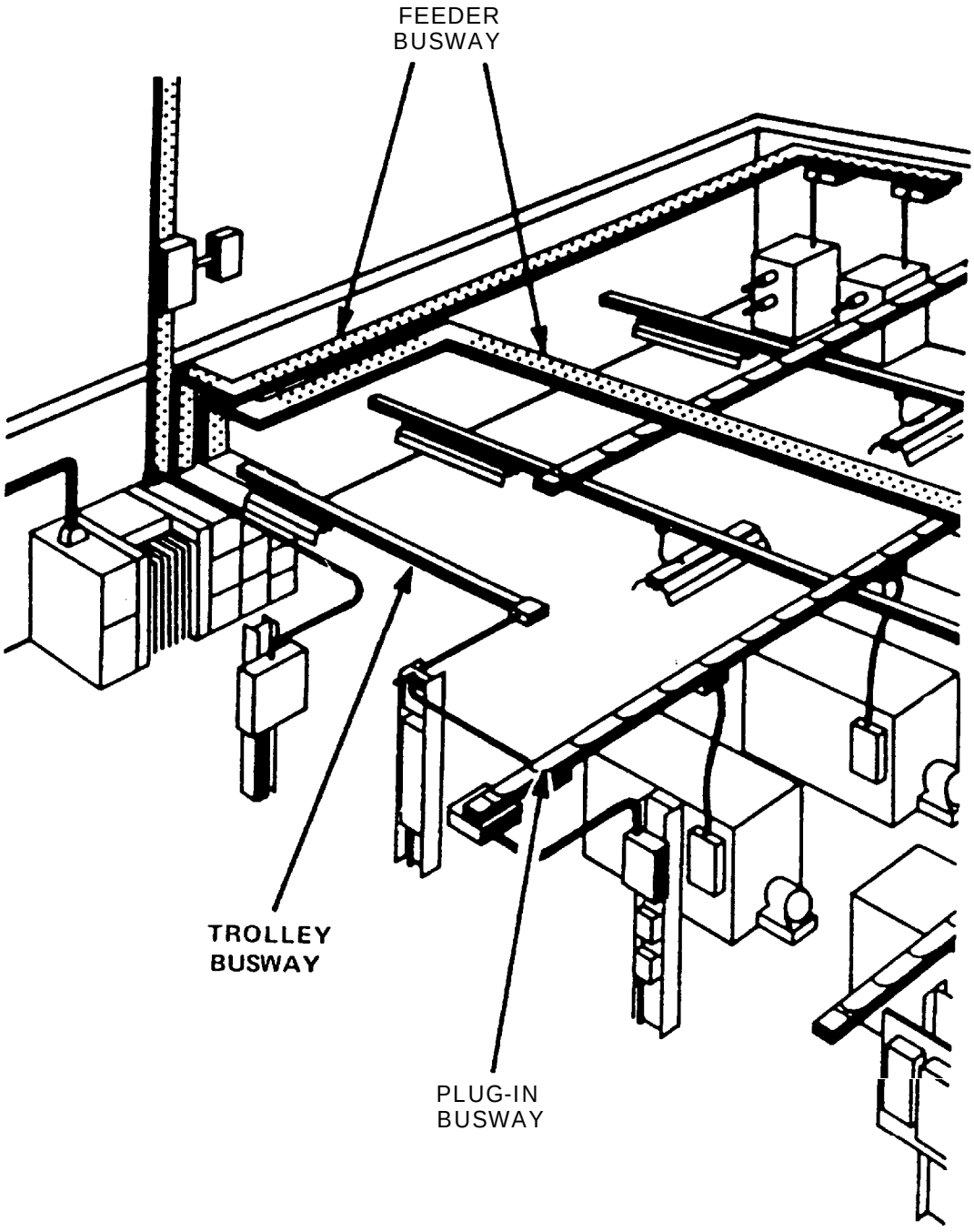

Figure 2-1. Typical busway installation.

but leaves the control circuits energized (fig 2-2). If a "test" position is not provided, then completely withdraw the circuit breaker from its compartment and use a test coupler to provide control power.

(2) Test for voltage to make sure that all paths of potential backfeed from control power circuits, as well as outside sources, are disconnected. This is especially important if an external source of control power is being used for testing.

(3) Operate the breaker and check all functions. Use both the electrical means (when provided) and the mechanical means to charge, close and trip the breaker. This is particularly important for breakers that normally remain in either the opened or closed position for long periods of time.

(4) Remove the breaker from its compartment to a clean maintenance area. Close the compartment door and cover the breaker cutout to prevent access to live parts.

(5) Check and lubricate all safety rollers and auxiliary contacts. Check all mechanical clearances to ensure they are within manufacturer specified tolerances. Also inspect and lubricate bus stabs and

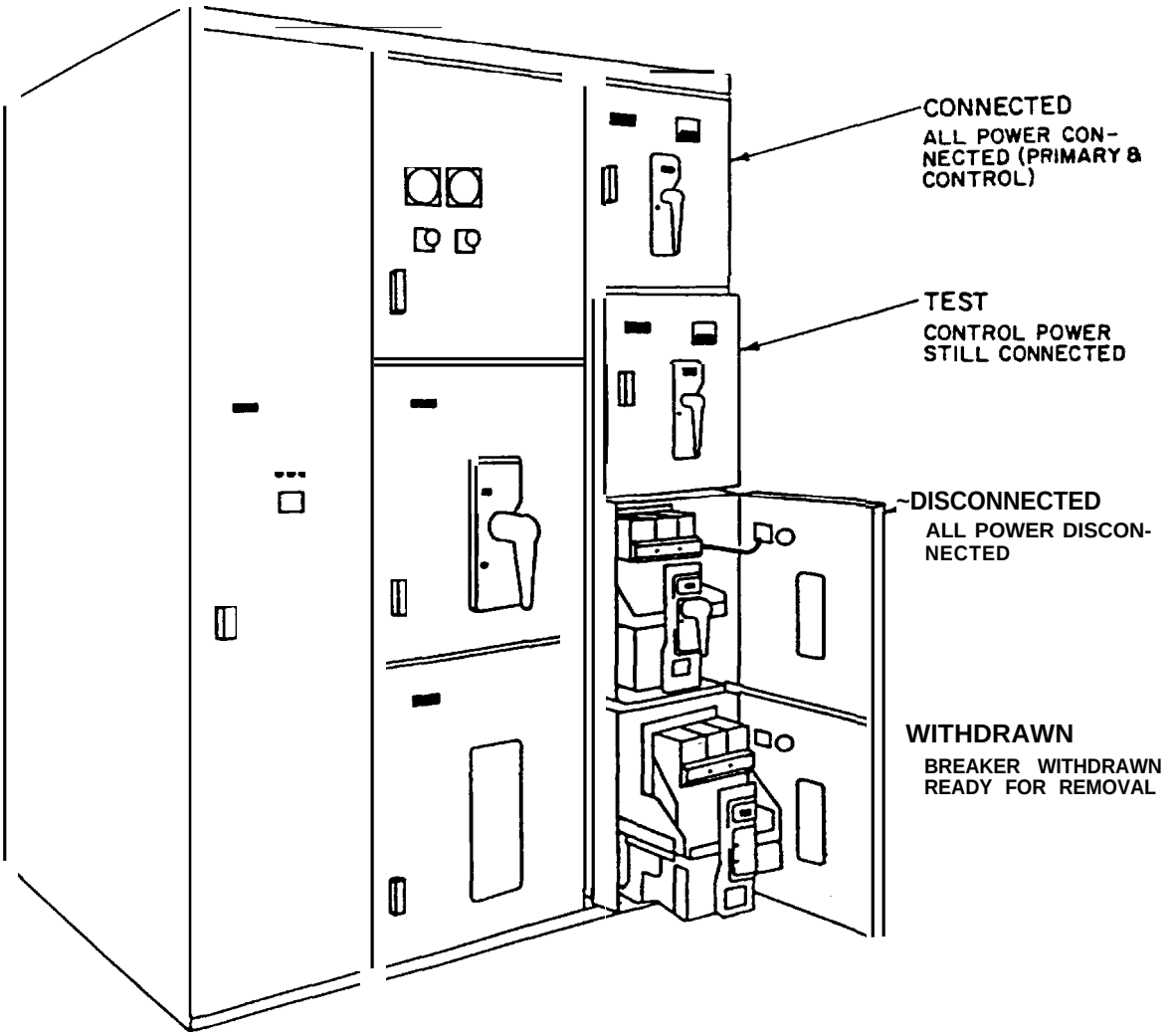

Figure 2-2. Drawout circuit breaker positions.

ac/dc control block contacts. Verify correct operation of "trip free" and anti-pump mechanisms.

b. Fixed circuit breakers. Maintenance on fixed- or bolter-type circuit breakers is normally performed with the breaker in place inside its cubicle. Special precautions must be exercised to assure equipment is de-energized and the circuit in which it is connected is properly secured from a safety standpoint. All control circuits should be de-energized. Stored energy closing mechanisms should be discharged.

c. Power circuit breaker components. Maintenance on all power circuit breakers will encompass maintenance on the following components.

(1) *Insulation.* The general rule for insulation is keep it clean and dry. Remove interphase barriers and clean them and all other insulating surfaces with dry compressed air and a vacuum cleaner. Wipe insulation with clean lint-free rags and solvents as recommended by the manufacturer if hardened or encrusted contamination must be removed. Repair moderate damage to bushing insulation by sanding smooth and refinishing with a clear insulating varnish. Check insulating parts for evidence of overheating and for cracks that indicate excessive thermal aging.

(2) *Contacts. The* major function of the power circuit breaker depends among other things upon correct operation of its contacts. These circuit breakers normally have at least two distinct sets of contacts on each pole, main and arcing (fig 2-3). Some have an intermediate pair of contacts which open after the main contacts and before the arcing contacts.

(a) Main contacts. When the breaker is closed, practically the entire load current passes through the main contacts. Also, short circuit current must pass through them during opening or closing faulted lines. If the resistance on these contacts becomes high, they will overheat. Increased contact resistance can be caused by pitted contact surfaces, foreign material embedded on contact sur-

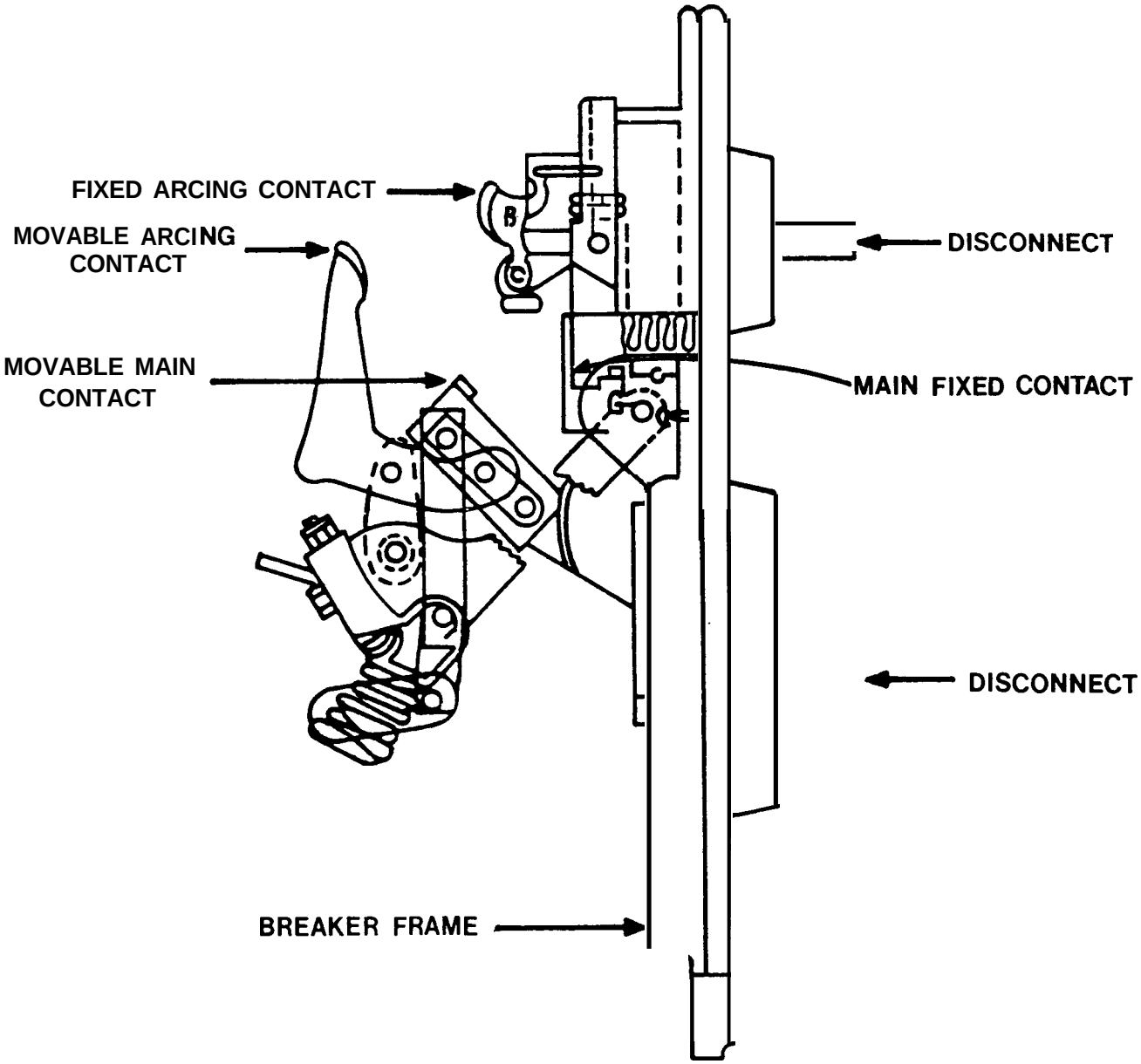

Figure 2-3. Power circuit breaker main and arcing contacts.

faces, or weakened contact spring pressure. This will cause excessive current to be diverted through the arcing contacts, with consequent overheating and burning.

(b) Arcing contacts. Arcing contacts are the last to open; any arcing normally originates on them. In circuit interruption, they carry current only momentarily, but that current may be equal to the interrupting rating of the breaker. In closing against a short circuit, they may momentarily carry considerably more than the short circuit interrupting rating. Therefore, they must make positive contact when they are touching. If not, the main contacts can be badly burned or may result in a failure to interrupt a fault.

(c) Contact maintenance. The general rules for maintaining contacts on all types of breakers are: keep them clean, aligned and well adjusted. To inspect the circuit breaker contacts, the arc chutes must be removed. When doing this, check the arc chutes for evidence of damage, and replace damaged parts. If not damaged, then blow off dust or loose particles. Once the main contacts are exposed, inspect their condition. Slight impressions on the stationary contacts caused by the pressure and wiping action of the movable contacts is tolerable. Contacts which have been roughened in service should not be filed but large projections, caused by unusual arcing, should be removed by filing. When filing, take care to keep the contacts in their original de-

sign. That is, if the contact is a line type, keep the area of contact linear, and if ball type, keep the ball shaped out. Discoloration of silver-plated surfaces is not usually harmful unless caused by insulating deposits. These deposits should be removed with alcohol or a silver cleaner. Whether cleaned or not, lubricate the main contacts by applying a thin film of slow aging, heat resistant grease. All excess lubricant should be removed with a clean cloth to avoid accumulation of dirt and dust. Under no circumstances should the arcing contacts be lubricated. Where serious overheating is indicated by discoloration of metal and surrounding insulation, the contact and spring assemblies should be replaced in accordance with manufacturer's instructions. While carefully closing the circuit breaker, check for proper gap, wipe and contact alignment. Contact gap is the distance between the stationary and movable contacts with the circuit breaker in the fully open position. If the arcing contact gap is too small, a circuit breaker may not be able to interrupt a fault. If the main contact gap is too small, the main contacts will interrupt the fault along with the arcing contacts and possibly burn the main contacts. Contact wipe is the amount of over travel between the stationary and movable contacts from the time when the contacts are just touching to the time when the circuit breaker is fully closed (figs 2–4, 2–5, and 2–6). Check that all contacts make and break at approximately the same time. Make adjustments in accordance with the manufacturer's recommendations. Laminated copper or brush style

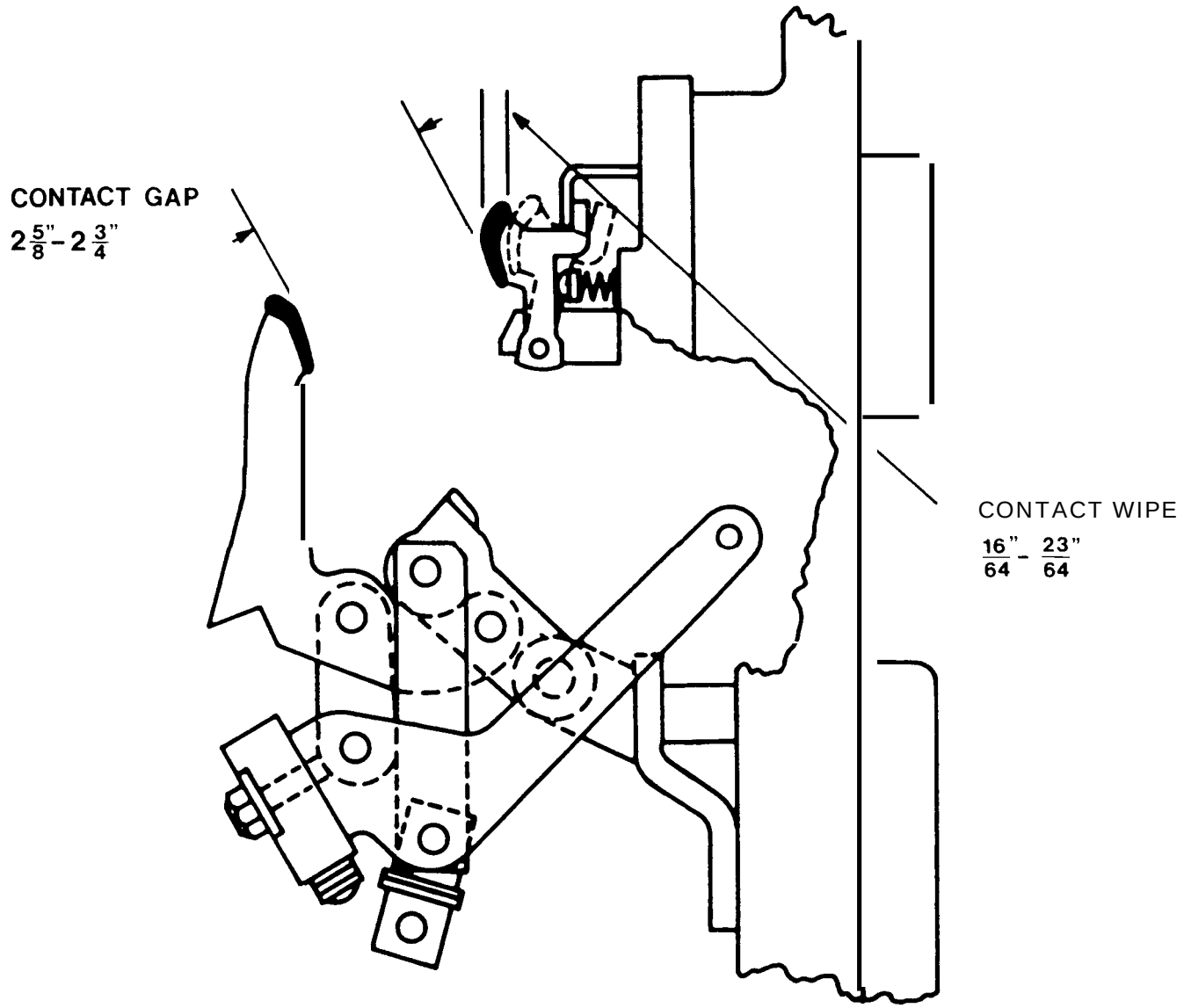

Figure 2-4. Arcing contact gap and wipe.

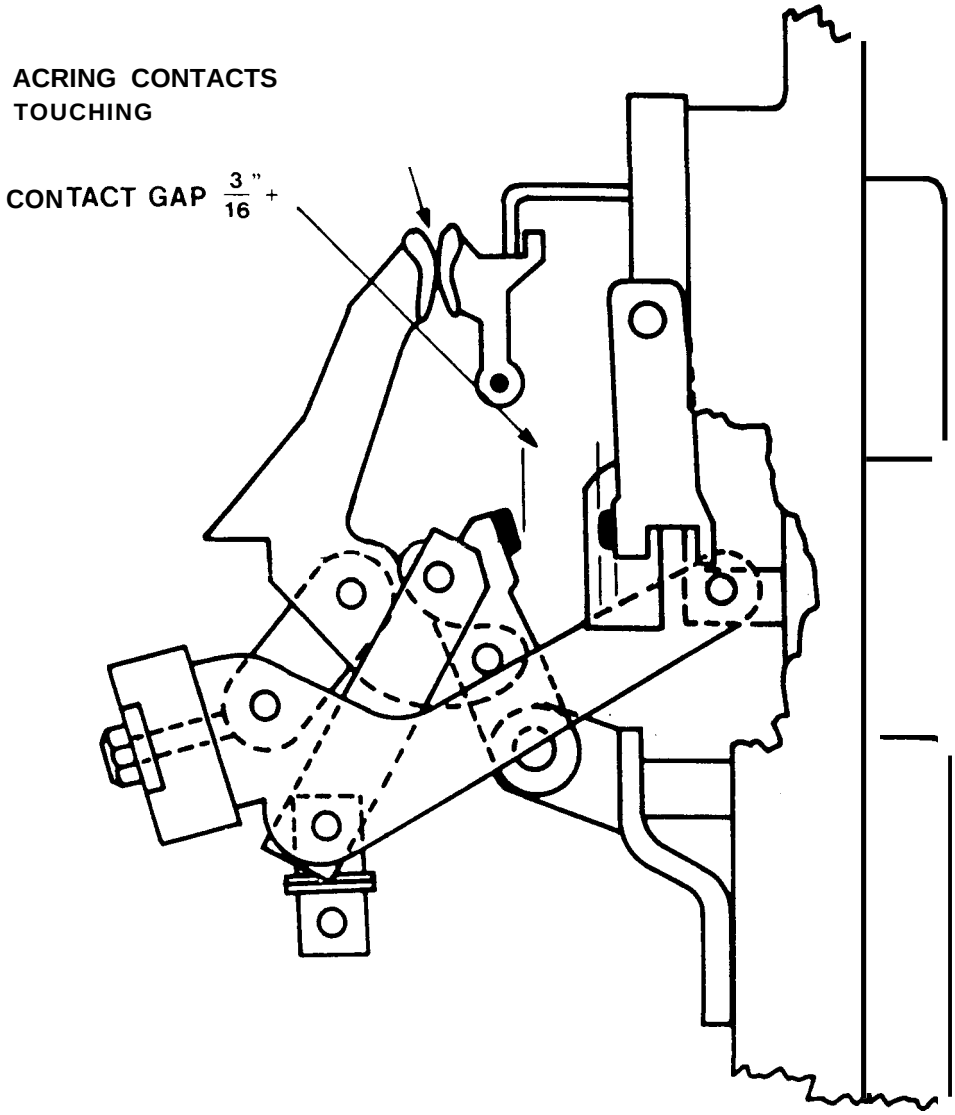

Figure 2-5 Intermediate contact gap.

contacts found on older circuit breakers should be replaced when badly burned. Repairs are not practical because the laminations tend to weld together when burning occurs, and contact pressure and wipe are greatly reduced. These contacts may be filed to remove large projections or to restore their original shape. They should be replaced when they are burned sufficiently to prevent adequate circuit breaker operation or when half of the contact surface is burned away. Carbon contacts, used on older circuit breakers, require very little maintenance. However, inadequate contact pressure caused by erosion or repeated filing may cause overheating or interfere with their function as arcing contacts.

(3) *Operating mechanism.* The purpose of the operating mechanism is to open and close the breaker contacts. This usually is done by linkages connected, for most power breakers, to a power operating device such as a solenoid or closing spring for closing, and contains one or more small solenoids or other types of electro-magnets for tripping. Tripping is accomplished mechanically, independent from the closing device, so that the breaker contacts will open even though the closing device still may be in the closed position. This combination is called a mechanically trip-free mechanism. After closing, the primary function of the operating mechanism is to open the breaker when it is desired, which is whenever the tripping coil is energized at above its rated minimum operating voltage. The breaker operating mechanism should be inspected for loose or broken parts; missing cotter pins or retaining keepers; and missing nuts and bolts. It should also be examined for damage or excessive wear on cam, latch, and roller surfaces. Excessive wear usually results in loss of travel of the breaker contacts. It can affect operation of latches; they may stick or slip off and prematurely trip the breaker. Adjust-

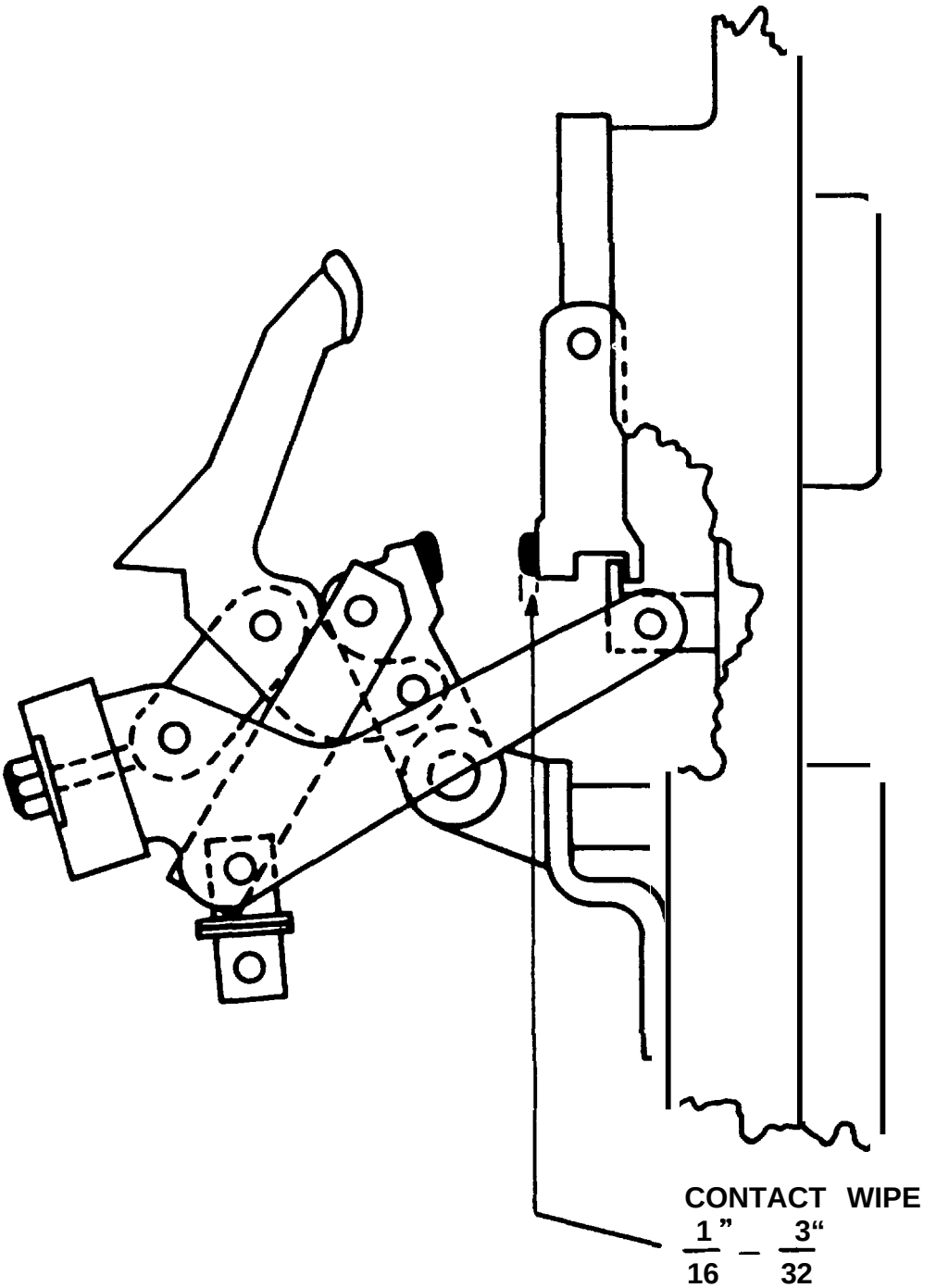

Figure 2-6. Main *contact wipe.*

menta for excessive wear are possible for certain parts. For others, replacement is necessary. The closing and tripping action of a breaker should be quick and positive. While documenting, operate the breaker several times, checking for obstructions or excessive friction. Any binding, slow action, delay in speration, or failure to trip or latch must be conrected prior to returning to service. Clean and relubricate the operating mechanism. Use a nondetergent light machine oil (SAE-20 or 30) to lubricate pins and bearings not disassembled. Use a non-hardening and non-conductive grease to lubncate the ground or polished surfaces of cams, rollovers, latches and props, pins and bearings that are removed for cleaning. Check the breaker operating mechanism adjustments and readjust as described in the manufacture% instruction book. If these adjustments cannot be made within specified tolerances, it will usually indicate excessive wear and the need for a complete overhaul.

(4) *Trip devices.* The trip devices on low voltage circuit breakers provide the electrical decisions needed to detect the difference between normal and abnormal conditions of current flow. The maintenance and adjustment of these devices is just as important as the work performed on the main contacts and operating mechanism. The trip devices are either electro-mechanical or solid-state. Both types are responsible for providing various degrees of fixed, short, or inverse time delays based on the amount of current they sense. The electro-mechanical type, with an air or fluid dashpot for time delay, should be tested as part of the maintenance work performed. A dashpot is a pneumatic or hydraulic device used for cushioning or damping of movement to avoid mechanical shock and consisting essentially of a cylinder containing air or liquid and a piston moving in it. Testing of the electro-mechanical devices requires the use of a low voltage (about 0-20V) but high current (usually O-50,000A) primary injection test set designed specifically for this purpose. Calibration tests should be made to verify that the performance of the device is within the values shown on the manufacturer's published curves; taking into account that the time-current curves are plotted as a band of values rather than a single line (fig 2–7). Pay careful attention to how the manufacturer has presented the curve data. There is a wide variety of formats. Check to see that the current is in amperes or multiples of a pickup value and whether temperature ranges or previous conditions will affect results. Usually, the trip devices are tested one unit at a time. There are some devices which may use a thermal element for time delay. These may have to be tested all at once to get results similar to those published by the manufacturer. Check the test conditions carefully. If the trip devices do not operate properly, the calibration and timing components should be adjusted or replaced per the manufacturer's recommendations. If repair or replacement of the electro-mechanical devices is being considered, then thought should be given toward retrofitting the existing breaker with solid-state trip devices. This newer technology is generally more reliable because the parts used to make the trip unit do not drift out of adjustment or suffer the effects of aging or contamination to the same degree as their electro-mechanical forerunners. If the breakers are already equipped with solid-state trip devices, they should also be checked for proper operation and time delay in accordance with the manufacturer's published curves. The test procedure recommended by the manufacturer should be followed.

(5) *Auxiliary devices.* Inspect the closing motor or solenoid, shunt trip coil and mechanism, alarm mechanisms, and the control wiring for correct operations, insulation condition and tightness of connections. Check on-off indicators, spring-charge indicators, mechanical and electrical interlocks, key interlocks, and lock-out fixtures for proper operation and lubricate where required. In particular, test the positive interlock feature which prevents the insertion or removal of the breaker while it is in the closed position. Check control devices for freedom of operation. Replace contacts when badly worn or burned. After the breaker has been serviced, manually operate it slowly with a closing device to check for tightness or friction and to see that the contacts move to their fully open and fully closed positions. Electrically operate the breaker several times to check the performance of the electrical accessories using the "TEST" position, an external test/control cabinet, or a test coupler.

2-7. Network protectors.

The current-carrying parts, main contacts, and operating mechanism of a network protector are very similar to those of the air circuit breaker. This similarity usually ends with the principal mechanical devices. Unlike the usual feeder circuit breaker, the network protector is more like a tie circuit breaker; that is, it is almost always energized on both sides. This condition requires that extreme care be taken during installation or removal of the unit from service. The network protector is equipped with special relays that sense the network circuit conditions and command the mechanism to either open or close automatically in response to those conditions. Network protectors are used where large amounts of power must be distributed to high density load areas such as commercial buildings and office complexes. To form a network, several incoming power sources may be connected. As a result, a short circuit at any point in the system usually involves very high fault currents.

a. Safety precautions. Due to the construction and purpose of the network protector, taking it out of service or placing it back in service is a procedure that must be done while the circuit is energized. During this work, always use the special insulated tools provided with the particular model to be serviced. Alternate or make-shift tools are not recommended unless they have been laboratory tested and are known to have good safety performance. Electrical grade, safety gloves should still be worn by the person servicing the unit regardless of the type or condition of the tools used.

b. Maintenance. A routine maintenance schedule for network protectors should be observed. The frequency of inspection will vary based on the location and environment in which the unit is installed, and

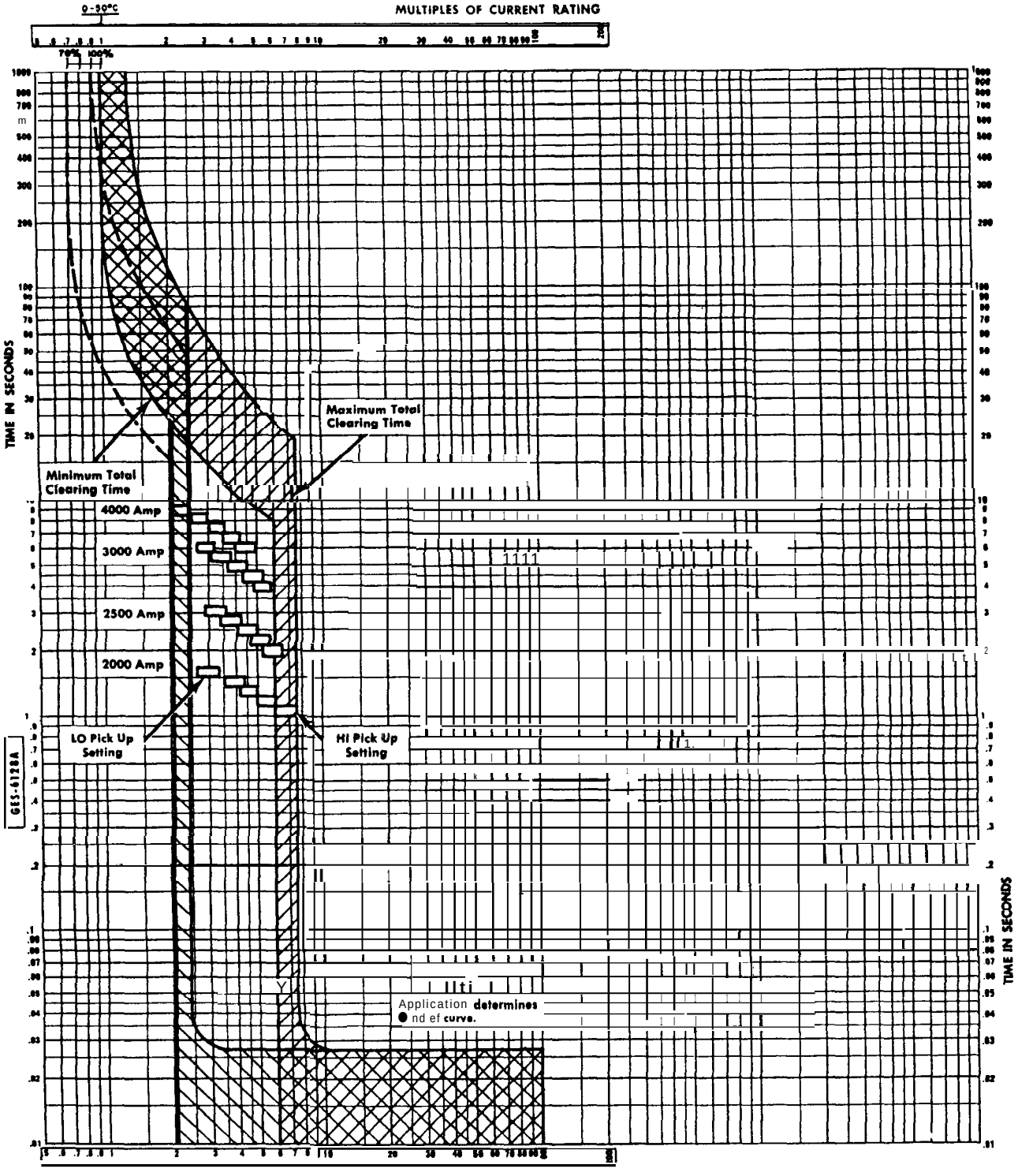

MULTIPLES OF CURRENT RATING

GENERAL ELECTRIC	MOLDED-CASE CIRCUIT BREAKER **POWER BREAK'''** Type THS (3000A Frame & 4000A Breaker)	GES-6128A
Current Ratings 3000A Frame – 2000, 2500 and 3000 amperes 4000A Breaker – 4000 amperes **Voltage Ratings** 600 volts a.c., 250 d.c. **Frequency Rating** 60 Hertz	Long-time Delay and Instantaneous Time-current Curves Curves show circuit breaker in still air, 0-50 C ambient, (wired with conductors of corresponding rating, prior load.)	**Adjustments** Standard long time magnetic delay, 100% of rating, not adjustable. Optional THS adjustable trip, 70-100% of rating Instantaneous magnetic trip, continuous adjustment, factory set. HI Block, show trip range at each setting.

12 73 (5M) GENERAL ELECTRIC CO., CIRCUIT PROTECTIVE DEVICES PRODUCT DEPT., PLAINVILLE, CONN. K215,*, A

Figure 2-7. Electromechanical trip device time-current curve.

the number of operations the unit has made. In all cases, open the circuit first. This is done by moving the control handle from "AUTOMATIC" to "MANUAL" and then manually opening the circuit. The control handle and/or operating mechanism should then be locked in the "OPEN" position before further work is done. Maintenance should include cleaning any accumulation of dust, dirt or corrosion deposits, a thorough visual inspection, and overall performance tests. Should the operation of any part be suspect, refer to the manufacturer's instructions describing operation, adjustment, and replacement of these parts. If the network sensing relays are out of calibration, they should be recalibrated by competent shop personnel. The network protector is housed in a cell or enclosure similar to those used for air circuit breakers (fig 2-8). The circuit breaker mechanism and the network relay panel assembly of a network protector are usually constructed aa an integral, drawout unit which must be withdrawn fmm the housing for proper maintenance. Removal is done by unbolting the fuses at the top (usually) and the disconnecting links at the bottom (some models have bolt-actuated disconnecting fingers at the bottom). After removing any additional lock-down bolts or latches, the drawout unit may be carefully withdrawn using the rails provided for support. Although this provides a comparative measure of safety, work should be done cautiously since there is voltage present within the enclosure. It is better to move the unit completely away from the enclosure (fig 2–9). The following inspection and maintenance operations can be done on the drawout unit:

(1) Clean the breaker assembly. Use of a vacuum cleaner is preferred. Use cloth rags free of oil or grease for removing clinging dirt.

(2) Remove arc quenchers. Replace if damaged.

(3) Inspect main contacts (fig 2-10). Smooth any heavily frosted area with a very fine file or a burnishing stone which does not shed abrasive particles. Protect hinged joints from falling particles during filing.

(4) File smooth any especially high projections of metal on arcing contacts.

(5) See that all electrical connections are tight.

(6) Look for any abrasion of wire insulation and repair.

(7) Check for signs of overheating of control wire and current carrying parts.

(8) See that all springs are in good condition and are properly seated in place.

(9) See that all nuts, pins, snap rings or retainers, and screws are in place and tight.

(10) Replace any broken or missing barriers.

(11) With the rollout unit still set aside, perform the following maintenance operations inside the enclosure:

****WARNING****

Both source and load terminals are probably still energized. Use insulated tools and safety protective equipment for this work. Do not remove any barriers from the enclosure.

(a) Look for loose hardware on the enclosure bottom or beneath the frame. If any is found, trace to source and correct problem or replace.

(b) Clean stand-off bus insulators.

(c) Remove oxide film from terminal contacts if necessary.

(12) Manually close and trip the breaker mechanism according to instructions furnished for the particular model.

(13) Perform an operational test using a network protector test kit.

(14) Conduct insulation resistance tests, dielectric test and electrical operating test in accordance with the manufacturer's recommendations.

(15) Carefully replace the drawout unit in the enclosure. Make a final inspection to be sure no control wiring has become snagged, and that no plugs or connecting surfaces have been bent or damaged.

2-8. Auxiliary switchgear equipment.

Auxiliary equipment includes devices such as fuses, capacitors, meters, relays, etc. This equipment should be serviced along with the major switchgear components, unless there is some indication that a device is being heavily or improperly used, in which case it should be inspected more often. Protective relays and meters should be inspected and calibrated on a scheduled basis. Critical service equipment should have the protective relays checked at every maintenance turn (annually or according to manufacturer's recommendations). Relays applied to other general distribution circuits may be done less frequently (see para *2-8h).*

a. Fuses. Fuse maintenance is covered as a separate category of electrical equipment (para *5-4d).*

b. Capacitors. The maintenance requirement on power capacitor installations is so small that its

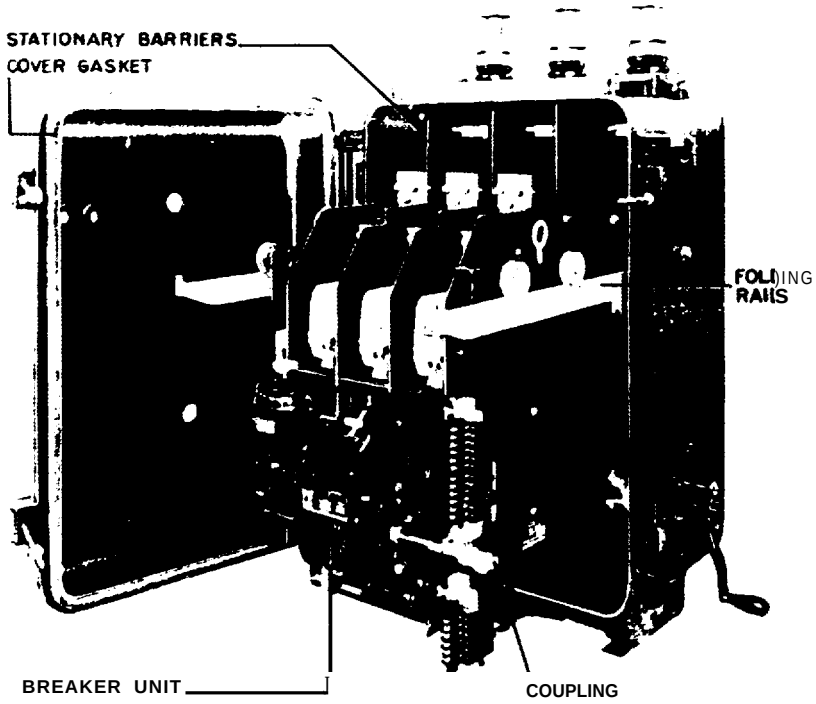

Figure 2-8. Typical drawout network protector and enclosure.

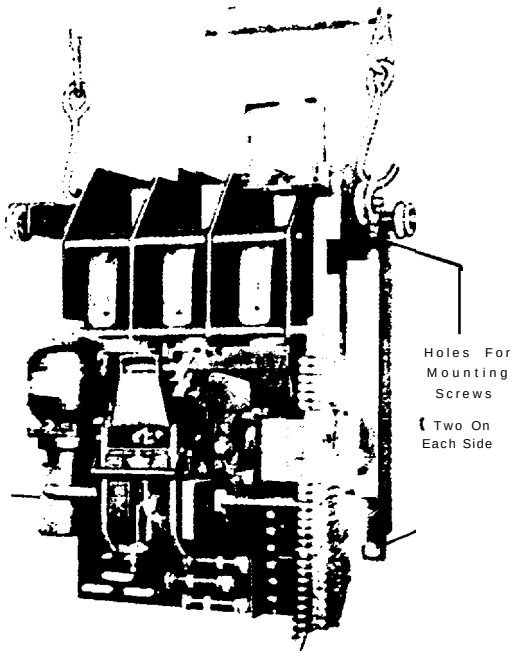

Figure 2–9. Network protector removable unit.

importance is often overlooked. The voltage of the system at the capacitor location should be checked at light load periods to determine if an overvoltage condition exists. Any changes in circuit connections, which may increase voltage levels, warrant a recheck of operating conditions. The conductor sizes should provide for not less than 135 percent of capacitor current at rated voltage and WA. As a general rule, if the side of the capacitor unit casing is operating at a temperature above 55 degrees C (131 degrees F a temperature almost too hot for barehand contact), then a more complete investigation of operating conditions should be made. The case temperatures should never exceed 65 degrees C (149 degrees F) under any conditions. Adequate ventilation is therefore necessary to remove the heat generated by continuous full-load duty. Remove any obstructions at ventilation openings in capacitor housings to ensure that this ventilation is maintained. A disconnected capacitor retains its electrical charge for some time and may even retain the full-line voltage across its terminals. Therefore always discharge a capacitor before handling or making connections. An insulation short circuit jumper may be used for this purpose; however, it should only be applied with full knowledge of the circuit, and with the use of appropriate protective equipment. Power capacitors are generally provided with individual fuses to protect the system in case of a short circuit within the capacitor. In addition to a faulty capacitor, a fuse may be blown by an abnormal voltage surge. Check for blown fuses and replace them with a type recommended by the manufacturer. Do not remove fuses by hand until the capacitor has been completely discharged. Clean the case of a capacitor, the insulating bushings, and any

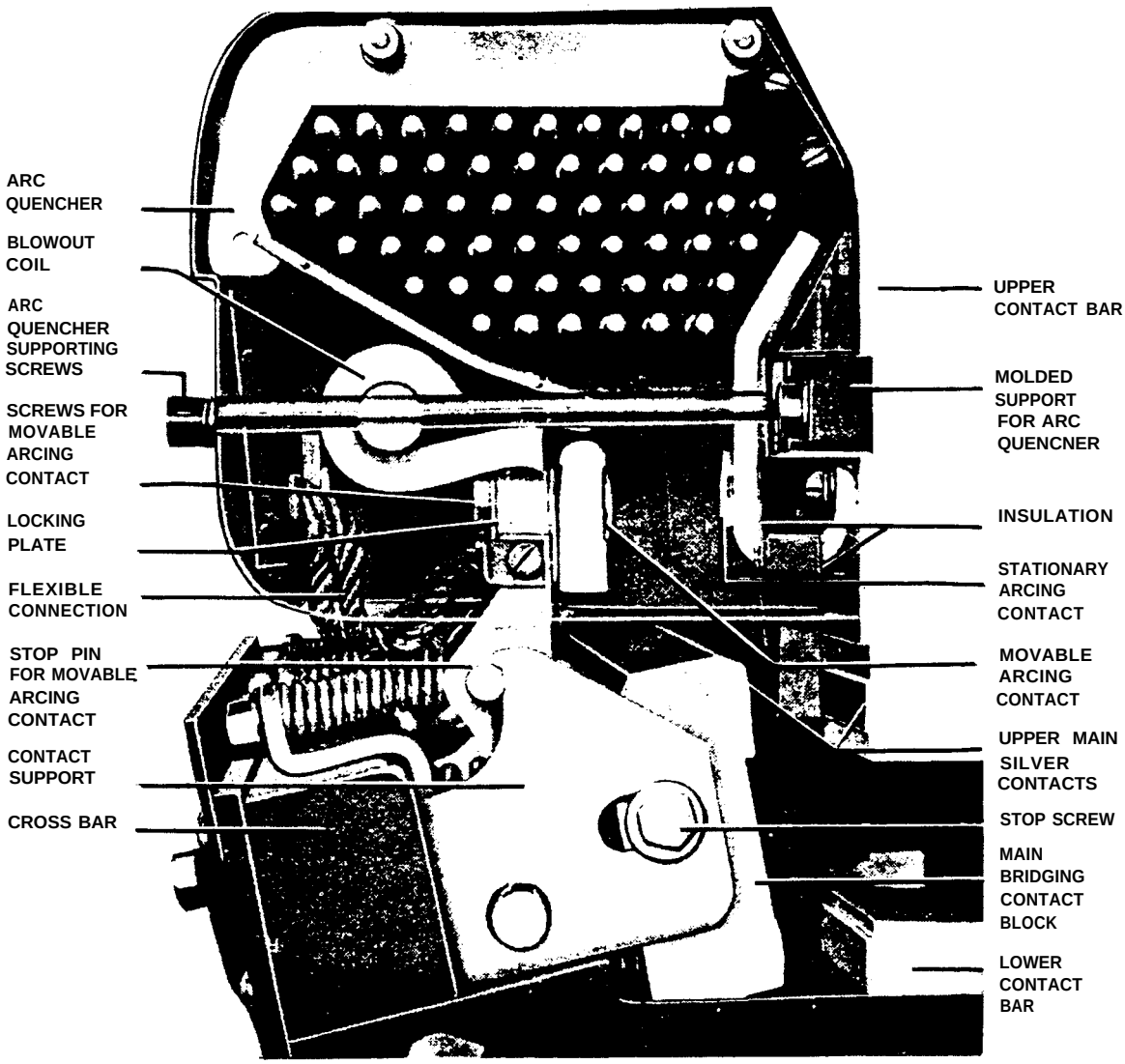

Figure 2–10. Typical contact construction for a network protector.

connections that are dirty or corroded. Inspect the case of each capacitor for leaks, bulges, or discoloration. If any of these conditions exist, then replace the capacitor (para 11–2).

c. Battery supplies. The control battery is such an important item in switchgear operation that it must be given strict attention in the maintenance program. The battery charger plays a critical role since it supplies normal direct current (DC) power to the station and maintains the batteries at a high level of charge. The batteries, in addition to supplying temporary heavy demands in excess of the charger capacity, serve as a back-up source to trip breakers upon loss of alternating current (AC) power. Failure of the charger or its AC supply transfers all DC load to the batteries. Each battery cell electrolyte level should be checked. While a single cell may not produce a serious shock hazard, when the cells are connected in a battery bank, a severe shock hazard may be possible. Also, there are usually many exposed connections, and safety gear and tools must be used to the best degree of safety such as face shields, acid/caustic resistant gloves, emergency eyewash, etc. Electrolyte is the fluid contained in each battery cell (fig 2–11). Low electrolyte levels indicate too high a charging rate. In this case, the "float-voltage" setting of the charger should be checked against the battery manufacturer's recommendations. The specific gravity of the battery electrolyte should be taken using a hydrometer (para 14-6). If the readings between battery cells vary more than fifty points on the hydrometer scale, the battery probably has a bad cell which should be replaced. If all cells read consistently low (within 50 points), the battery should be fully charged and the battery charger checked for proper operation. The battery top surface should be clean. Surface contamination can produce leakage currents that present a drain on the charger and the battery. Vent holes in the cell caps should be open. Battery termi-

nal connections should be tight and free of corrosion. If the terminal connections are corroded, they should be cleaned with bicarbonate of soda. Battery terminals and cable ends should be cleaned thoroughly. If stranded cable is used it is advisable to cut off the corroded end. If this is not possible, the strands should be separated and cleaned internally. Any dust accumulation on the battery charger should be blown off or wiped clean. Ventilation openings should be clear of obstruction. Terminal connections should be checked for tightness. All relays, lights or horns for indicating such abnormal conditions as grounds, loss of AC power supply, and high or low voltage should be checked to ensure that they are operating properly. During maintenance outages of the AC supply, there may be times when it is necessary to provide a temporary supply to the charger. While being charged, a battery produces and emits a mixture of hydrogen and oxygen gases which is very explosive. Open flames or sparks must not be permitted in close proximity to the batteries. The room or compartment in which operating batteries are located should be well ventilated. Smoking should be prohibited in these rooms or compartments.

d. Instrument transformers. Instrument transformers are used to step down a current or voltage in order to operate a meter or a relay. Indoor-type instrument transformers are normally dry type, except potential transformers (PTs) which may be enclosed in compound-filled metal cases. The more common transformer constructions have the complete transformer molded into one solid mass with only the terminals exposed.

**** CAUTION****

Never open circuit the secondary winding of a current transformer while energized. To do so may result in component damage or personal injury.

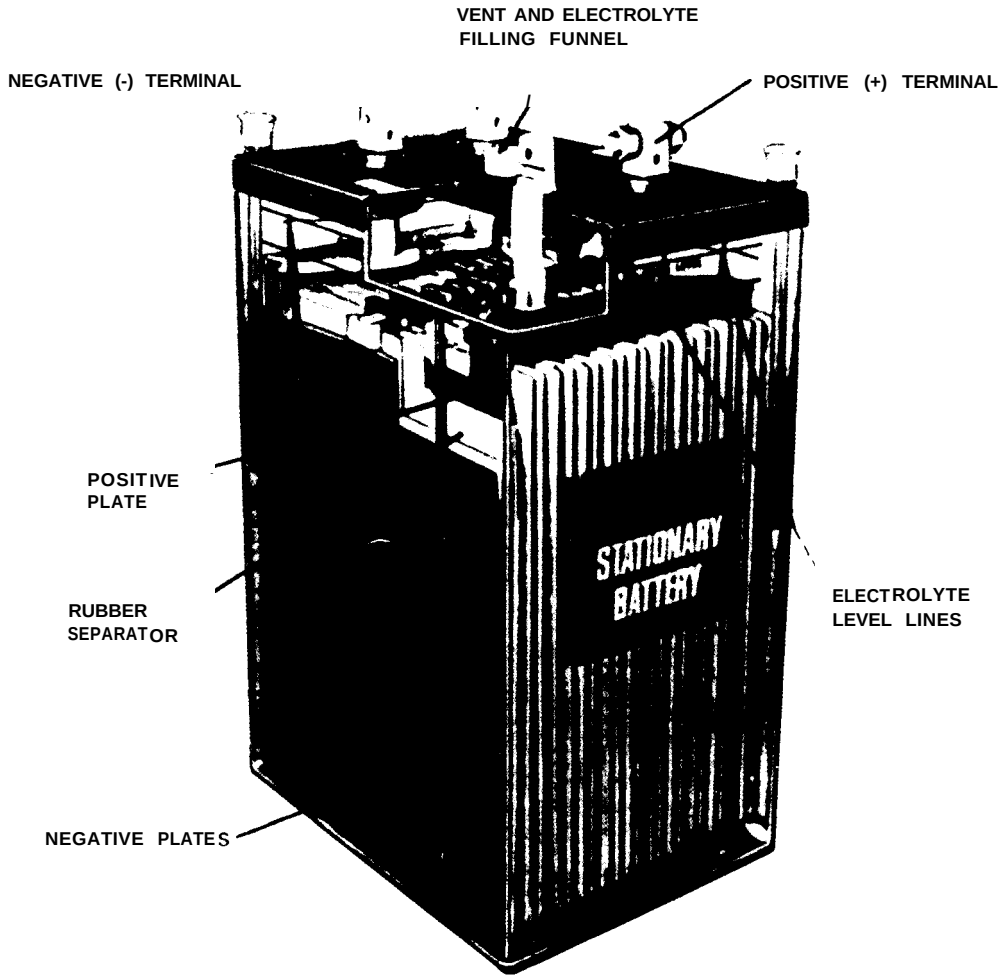

Figure 2-11. Large cell for a stationary battery.

(11) Verify connection of secondary PT leads by applying a low voltage to the leads and checking for voltage contribution at applicable devices.

(12) Check for PT secondary load with secondary voltage and current measurements. Make sure load is less than volt amps (VA) of PT.

f. Metering. Most of the buildings in a typical military installation are unmetered. Meters (both recording and indicating), relays, and associated equipment are usually part of a substation, main distribution switchboard equipment, or special equipment. Industrial shops and other buildings occasionally utilize kilowatt hour demand meters, power factor meters, ammeters, and voltmeters. In an effort to determine whether the maintenance or operation of these meters is adequate demands that the metering instruments be of the specified range, accurately calibrated, and adequately serviced. Instrument accuracy is always expressed in terms of the percentage of error at the full-scale point. Maximum accuracy, consequently, is obtainable by keeping the rating as high on the scale as possible, and requires a properly rated instrument. An instrument with an accuracy of 1 percent, with a scale reading of 100 divided into 100 divisions, is accurate to plus or minus one division. Hence, a reading of 20 has a margin of error of plus or minus one division, which in this instance means that the true value could be between 19 or 21—an actual variation of 10 percent. If the maximum indicating meter reading is less than 50 percent of the meter range, indicating meters should be recalibrated, and ratchets and dials changed. How often an instrument is calibrated depends on its use and the desired accuracy. If calibration standards and equipment are not available, instruments of nearly the same rating may be checked against each other. If wide discrepancies are noted, the suspect instrument should be checked by a competent laboratory or returned to the manufacturer. For many military establishments, the utility company will best perform this work. Take care to prevent entrance of dirt or lint into an instrument because this dirt could hinder the actuation of the instrument pointer. Clean the glass with a damp cloth because a dry cloth may induce a static charge on the glass and affect the instrument reading. Breathing on a charged glass discharges it. Never oil instrument bearings. Indicating demand and power factor meters should be tested and recalibrated every 2 years. Single-phase watt hour meters should be tested at least once every 5 years; self-contained polyphase watt-hour meters every 2 years. Transformer watt-hour meters on the secondary system (600 volts and below) should also be tested every 2 years; transformer watt-hour meters on the primary system every year. Voltmeters and ammeters should be calibrated at 2-year intervals.

g. Alarms. Alarms associated with transformer overtemperature, high or low pressure, circuit breaker trip, accidental ground on an ungrounded system, cooling water flow or overtemperature, or other system conditions should be tested periodically to assure proper operation.

h. Indicators. Circuit breaker “open-close” indicators can be checked during their regular maintenance. Ground indicator lamps for ungrounded electric systems should be checked daily or weekly for proper operation. Other miscellaneous indicators such as flow, overtemperature, excess pressure, etc., should be checked or operated periodically to assure proper operation.

i. Protective relaying. While the application of circuit protection as developed in a short circuit and coordination study is an engineering function, assurance that this designed protection remains in operation is a maintenance responsibility. Applying relay settings and periodically testing them are maintenance functions. Relays should be examined to ensure the following:

(1) All moving parts are free of friction or binding.

(2) All wiring connections are tight.

(3) All contacts are free of pitting or erosion.

(4) solenoid coils or armatures are not overheated.

(5) Glass, covers or cases are not damaged.

j. For relay testing procedures, refer to chapter 14. The protective relay circuitry should also be checked by closing the breaker in the test position and while documenting, closing the contacts of each protective relay to trip the circuit breaker.

2-9. Switchgear trouble-shooting.

Table 2–2 provides detailed information regarding trouble-shooting switchgear failures. Probable causes along with recommended remedies are listed for typical failures.

Table 2-2. Trouble-shooting procedures for switchgear equipment.

CAUSE	REMEDY
1. Meters Inaccurate	
Dirt or dust may be impeding movement; particles may be adhering to the magnets	Clean, test and calibrate meter.
Meter may be damaged - have a cracked jewel, rough bearing, bent disk or shaft, insufficient disk clearance or damaged coils.	Repair or replace damaged parts, test and calibrate meter.
Loose connections.	Tighten test and calibrate meter.
C.T. circuit shorted or shorting strap left	Remove the short.
2. Meters Failing to Register	
Blown potential transformer fuse.	Renew blown fuses. Ascertain reason and correct trouble.
Broken wires or fault in connections.	Repair break, correct fault.
Wedge or block accidentally left at time of test or inspection.	Remove wedge or block, test and calibrate meter.
C.T. circuit shorted or shorting strap left.	Remove the short.
3. Damaged Control, Instrument Transfer Switch or Test Blocks	
Burned or pitted contacts from long use without attention or from unusual conditions.	Dress or clean burned contacts, or replace with new contacts if necessary.

Table 2-2. Trouble-shooting procedures for switchgear equipment - continued.

CAUSE	REMEDY
4. Relays Failing to Trip Breakers	
Improper setting.	Adjust setting to correspond with circuit conditions.
Dirty, corroded or tarnished contacts.	Clean contacts with burnishing tool. Do not use emery or sandpaper.
Contacts improperly adjusted.	Readjust so that contacts close with proper amount of wipe.
Open circuits or short circuits in relay connections.	Check with instruments to ascertain that voltage is applied and that current is passing through relay.
Improper application of target and holding coil.	Target and holding coils should correspond with tripping duty of breaker to assure proper tripping.
Faulty or improperly adjusted timing devices.	If timing device is of bellows or oil-film type, clean and adjust. If of induction-disk type, check for mechanical interference.
5. Noises Due to Vibrating Parts	
Loose bolts or nuts permitting excessive vibration.	Tighten.
Loose laminations in cores of transformers. reactors, etc.	Tighten any loose nuts or core clamps.
6. Connections Overheating	
Increase of current due to additional load that is beyond normal current rating of bars or cables.	Increase the number or size of conductors. Remove excess current from circuit.
Bolts and nuts in the connection joints not tight.	Tighten all bolts and nuts. Too much pressure must be avoided.

Table 2-2. Trouble-shooting procedures for switchgear equipment - continued.

CAUSE	REMEDY
7. Failure in Function of All Instruments and Devices Having Potential Windings	
Loose nuts, binding screws or broken wire at terminals.	Tighten all loose connections or repair broken wire circuits.
Blown fuse in potential transformer circuit.	Renew fuses.
Open circuit in potential transformer primary or secondary.	Repair open circuit and check entire circuits for intactness and good condition.
C.T. circuit shorted or shorting strap left.	Remove the short.
8. Breaker Fails to Trip	
Mechanism binding or sticking due to lack of lubrication.	Lubricate mechanism.
Mechanism out of adjustment.	Adjust all mechanical devices, such as toggles, stops buffers, opening springs, etc., according to instruction book.
Failure of lacking device.	Examine surface of latch. If worn or corroded, it should be replaced. Check latch wipe and adjust according to instruction book.
Damaged trip coil.	Replace damaged coil.
Blown fuse in control circuit (where trip coils are potential type).	Replace blown fuse.
Faulty connections (loose or broken wire) in trip circuit.	Repair faulty wiring. See that all binding screws are tight.

CHAPTER 3

TRANSFORMERS

3-1. Small power transformers

Transformers referred to herein are limited to those having a primary voltage under 600V usually of dry-type construction and are used for lighting, control power, and small power applications. These small power transformers sometimes supply power to loads where continuity of service is critical and therefore a greater degree of attention is justified. While the percentage of transformer failures is low, failures that do occur are serious and result in extensive downtime and expense. The best assurance of continued high reliability is regular maintenance procedures. A transformer is a device usually used to transform, or step down a higher distribution level voltage to a lower utilization level. Although among the most reliable components in an electrical system, proper transformer maintenance is still a necessity. While removal of a transformer from service cannot always be accomplished, visual inspections and testing can be performed with the transformer in service. Transformers require very little attention when compared to most electrical apparatus. The extent of the inspection and maintenance will be governed by the size, the importance of service community, the location on the system, and operating conditions such as, ambient temperature and the surrounding atmosphere. In general, a two-year maintenance cycle is appropriate (see para 15-3 for transformers).

3-2. Dry-type transformers.

Dry-type transformers are of open-or-ventilated type construction with either air or gas serving as the insulation medium.

a. Routine inspections. All measurements should be taken at the time of peak load and recorded so that a means of comparing existing versus previous transformer conditions is available. Routine inspections of dry-type transformers should include load current readings, voltage readings and ambient temperature readings.

(1) *Load current readings.* If load current readings exceed the rated full load current of the transformer, then steps should be taken to reduce the load to within design limits.

(2) *Voltage readings.* Either undervoltages or overvoltages can be detrimental to a load and/for the transformer. If one of these conditions exists, then its cause should be determined and corrected to within nominal nameplate values.

(3) *Ambient temperature readings.* Dry-type transformers are cooled by free circulation of surrounding air over their surfaces. In a totally enclosed transformer, all heat is transferred by the exterior surfaces; an encased transformer depends upon air to enter the case at the bottom, flow upward over core and coil surfaces, and flow out of the case at the opening near the top. These transformers will perform satisfactorily at rated output when surrounding air does not exceed 40 degrees C (104 degrees F) and adjacent structures permit free movement of cooling air. Dry-type transformers are designed to reach rated temperature rise above ambient air temperature when operating continuously at rated voltage, frequency, or load. Serious overheating may result if the unit is operated for sustained periods at above rated voltage, above rated current, or at lower than rated frequency. Operating a transformer above the recommended temperature will shorten the life of the solid insulation and subsequently increase the risk of a failure. Therefore, it's important that ambient temperature readings be taken at the transformer to verify that it is within its design limits. If these limits are exceeded, simply moving the transformer to a cooler environment or providing additional ventilation or removing structures that prohibit the flow of cool air around the transformer may correct overtemperature conditions. If these changes are not feasible then the load on the transformer needs to be reduced or a higher rating transformer installed.

b. Special inspections. Before any work, more extensive than a visual inspection is performed on a transformer, it must be de-energized, tagged and locked-out (para 12–2). This is to ensure the safety of both personnel and equipment. In general, dry-type transformers have no moving parts (fig 3–1). The only maintenance required is periodic tightening of connections and removal of accumulated dust, dirt and lint as outlined below:

(1) Check for dirt accumulation on windings, internal leads and insulating surfaces.

(2) Check for dirt accumulation that impedes the flow of cool air.

(3) Check for tracking and carbonization over insulating surfaces.

(4) Check for cracked or loose insulators or coil spacers.

(5) Check deterioration of the turn insulation and barrier cylinders.

(6) Check for corrosion at all primary, secondary, tap, and ground connections.

(7) Check for loose connections at the coil clamps, primary, secondary, tap, and ground connections.

c. *Repairs.* A transformer should be cleaned of dirt and dust annually with a vacuum cleaner, blower or air compressor at less than or equal to 30 PSI. If moisture is evident by the appearance of rust, the unit should be dried by placing it in an oven or by blowing heated air over it. Liquid cleaners may only be used if recommended by the manufacturer. It should be noted that if any inspection and/or repair that takes longer than 24 hours or allows the transformer to cool to ambient temperature, then special drying procedures outlined by the manufacturer should be adhered to before the transformer is re-energized.

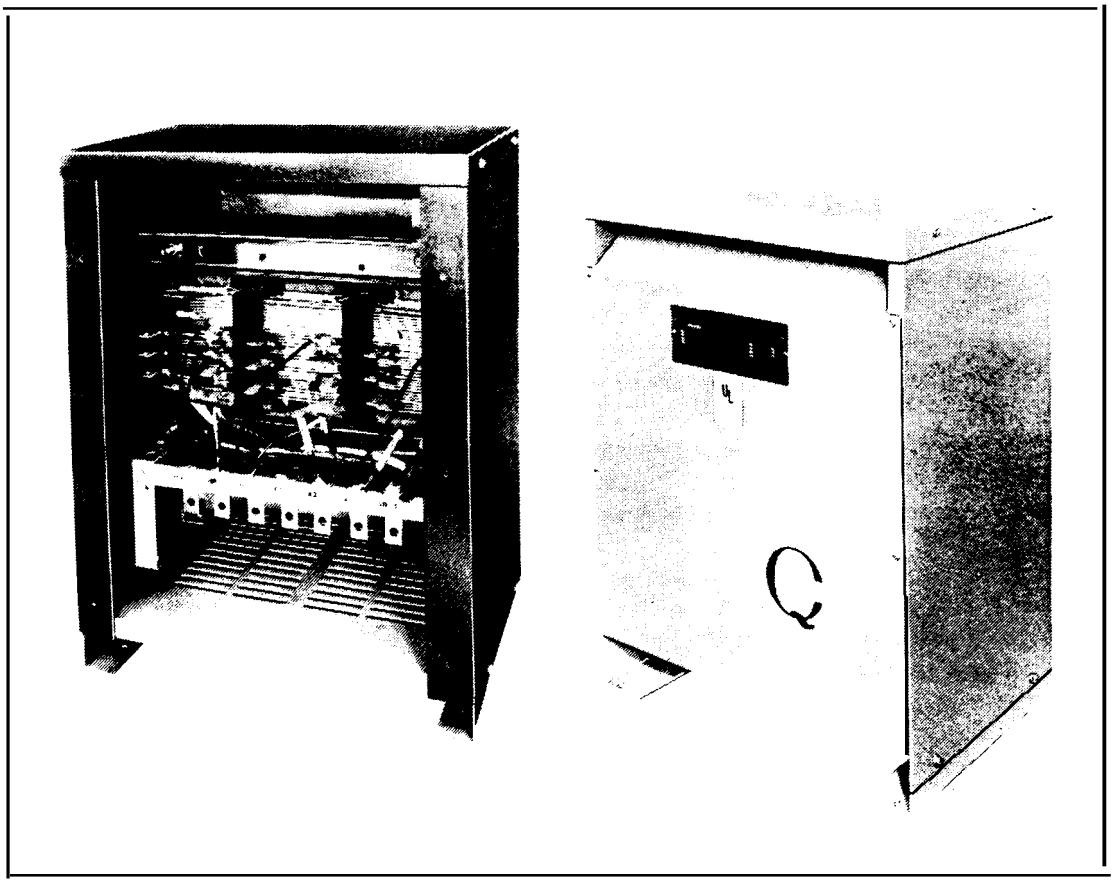

Figure 3–1. Dry-type transformers.

CHAPTER 4

ELECTRIC MOTORS

4-1. Maintenance of electric motors.

This information is intended to aid personnel concerned with the maintenance of electric motors. The data provided cover all DC and AC motors. The recommendations are general in nature and normally can be applied to the type of motors found on military installations. They are not intended to cover in detail the specialized applications occasionally encountered. For such cases, the manufacturer's instructions should be followed. Periodic inspection and regularly scheduled preventive maintenance checks and services will enhance continuous operation of the equipment without undue breakdowns. Frequency of these inspections often depends upon elements such as the criticality of the service, hours equipment is normally in service, and environment under which the equipment operates. In order to ensure an accurate data base from which an effective maintenance program can be initiated, a complete listing of machines in operation, the functions they perform and past history of operation and maintenance services must be maintained. Motor inspection and scheduled maintenance in the Air Force is performed by the work center responsible for the system (HVAC, sewer plant, water plant, etc.). Preventive maintenance will generally involve lubrication, cleaning and checking for sparking brushes, vibration, loose belts, high temperature, and unusual noises. Repair work on larger motors is normally limited to replacement or refinishing of bearings, commutators, collector rings, brushes, etc. Motor rewinding should not be attempted by the installation support groups (Directorate of Engineering and Housing, Public Works or Civil Engineer Shops) since it is more economical to contract such work to commercial shops that specialize in motor rewinding. With regard to the many thousands of fractional horsepower motors in operation throughout the military services, it may be more economical to replace a motor than to attempt to repair it. The local electrical supervisor must make this determination. Table 4-1 can be consulted to aid in the selection of proper replacement motors. Special consideration should also be given to high-efficiency motors since they save both energy and money throughout the life of the motor. The following safety precautions should be observed when working on electric motors:

a. Make sure the machine is de-energized, tagged and locked out before starting work (para 12–2).

b. Personal protective equipment such as goggles, gloves, aprons and respirators should be worn when working with hazardous substances (chap 11).

c. Great care should be exercised in selecting solvents to be used for a particular task.

d. Adequate ventilation must be provided to avoid fire, explosion, and health hazards where cleaning solvents are used.

e. A metal nozzle used for spraying flammable solvents should be bonded to the supply drum, and to the equipment being sprayed.

f. After tests have been made, discharge stored energy from windings by proper grounding before handling test leads.

4-2. Alternating current (AC) motors.

AC motors should, with reasonable care, give long continuous service. However, there is a tendency to neglect motor maintenance and, as a result, motor failures are frequent and repairs may become a continuous and costly process. It is therefore recommended that a preventive maintenance program be established to minimize emergency breakdowns. The program should be supported with an effective spare parts stock to speed up any unscheduled outages that may occur.

a. Squirrel-cage induction unit. This AC motor is the most prevalent in use at military installations (fig 4-l). The squirrel-cage motor is the most rugged and the least expensive of all types of induction motors. The squirrel-cage motor is nearly a constant speed machine. Typically its speed varies 0–5 percent from synchronous speed from no load to full load. The basic design of the rotor can be modified to provide a limited degree of external speed control.

b. Wound-rotor induction unit. This AC motor has connected to its collector rings the insulated phase windings on the rotor (fig 4-2). Through stationary brushes in contact with the collector rings, any desired value of external resistance may be added to the secondary (rotor) winding to give greater speed control of the motor. Also, use of external resistance allows the motor to deliver a high starting torque with a relatively small inrush current.

c. Synchronous unit. This type of AC motor (fig 4–3) has an insulated winding in both the rotor and the stator. A variable source of DC excitation is supplied to the rotor winding and an AC line source is supplied to the stator winding. A synchronous motor is a constant speed machine with similar

APPLICATION	TYPE	USUAL HP	SPEED 60 HERTZ	VOLTAGE RATING 60 HERTZ	TEMPERATURE RISE COIL WINDINGS	NORMAL ROTATIONAL (FACING END OPPOSITE DRIVE SHAFT)	OTHER DISTINCTIVE FEATURES
Refrigeration compressor, belt-driven	Single-Phase: a. Capacitor-start b. Repulsion-start Polyphase Induction: a. Squirrel-Cage, Constant speed.	1/6, 1/4, 1/3, 1/2, 3/4	1,725 rpm at full load	Capacitor-start, 1/4 hp and less-115V and 230V; 1/3 hp and more - 115/230V. Repulsion-Start, 115/230V. Polyphase, 208V, 230V, 440V, 460V.	Thermometer: 40° C. Resistance: 50° C.	Stock Motors, counter clockwise; adaptable for either direction.	Open or dripproof: sleeve bearings for horizontal mounting. Spring cap oiler on front end; extended oil cap oiler on back end.
Centrifugal ejector pumps, direct-driven	Single-Phase: a. Split phase. b. Capacitor-start c. Repulsion-start Polyphase induction: a. Squirrel-Cage, Constant speed.	1/4, 1/3, 1/2, 3/4, 1 1/3 and up	3,450 rpm at full load, polyphase - constant speed.	Split Phase 115V and 230V; Capacitor - start, 115/230V. Repulsion-Start, 115/230V. Polyphase, 208V, 230V, 440V, 460V.	Thermometer: 40° C. Resistance: 50° C.	Clockwise	Open Frame: Grease-lubricated ball bearings. Horizontal or vertical mountings. Terminals located in front end shield or frame adjacent to front end shield.

Table 4-1. Motor application guide.

APPLICATION	TYPE	USUAL HP	SPEED 60 HERTZ	VOLTAGE RATING 60 HERTZ	TEMPERATURE RISE COIL WINDINGS	NORMAL ROTATIONAL (FACING END OPPOSITE DRIVE SHAFT)	OTHER DISTINCTIVE FEATURES
Fans and blowers, shaft-mounted (propeller fans or centrifugal blowers with or without airflow; not for belted loads).	Single-phase: a. Split Phase. b. Permanent Split. Polyphase induction: a. Squirrel cage, constant speed.	Single-Phase 1/2 hp and up Polyphase, 1/8 hp and up	Two-speed near synchronous and near 2/3 synchronous speed; or adjustable varying speed down to 1/2 to synchronous speed. No variable speed on polyphase.	Split phase 115Vand 230V. Permanent, split capacitor, 115/230V. Polyphase 208V, 230V, 440V, 460V.	Thermometer: 55° C. Resistance: 65° C.	Stock Motors, Counter-Clockwise; adaptable for either direction.	Totally enclosed: Horizontal motors, sleeve bearings and vertical motors, ball bearings
Fans and blowers, belt-drive, commonly used on hot air heating system, blowers, and attic fan ventilators.	Single-Speed: a. Split Phase. b. Capacitor-Start. c. Repulsion-start. Two-speed: a. Split Phase. b. Capacitor-Start	Single-Speed: a. Split Phase, 1/6, 1/4 and 1/3. b.Capacitor-Start, 1/3, 1/2 and 3/4. c.Repulsion-start, 1/3, 1/2 and 3/4. Two Speed: a. Split Phase. 1/6, and 1/4 at highest speed. b.Capacitor-start, 1/3, 1/2 and 3/4 at highest speed.	1725/1140 at full load.	115 and 230.	Thermometer: 40°C. Resistance: 50°C.	Stock motors, counter-clockwise; adaptable for either direction	Open or dripproof: sleeve bearings for horizontal operation. Resilient mounting.

Table 4-1. Motor application guide--continued.

APPLICATION	TYPE	USUAL HP	SPEED 60 HERTZ	VOLTAGE RATING 60 HERTZ	TEMPERATURE RISE COIL WINDINGS	NORMAL ROTATIONAL (FACING END OPPOSITE DRIVE SHAFT)	OTHER DISTINCTIVE FEATURES
Motors for either domestic of industrial-type stokes.	Single-Phase: a. Capacitor-start b. Repulsion-start Polyphase: a. Squirrel-Cage, Constant speed.	Capacitor-start: a: 1/6 and 1/4, 115 and 230 volts. b. 1/3 and larger, 115/230 volts. Repulsion-start, 115/230 volts. Polyphase, 208/230, and 460 volts.	1,725 rpm at full load	See hp Column	Thermometer: Totally enclosed, 55° C. Open 40° C. Resistance: Totally enclosed, 64° C. Resistance, 50° C.	Stock Motors, counter clockwise; adaptable for either direction.	Open or totally enclosed: Latter type preferred 1/6, 1/4, 1/3 provided with resilient mounting; 1/2 and larger arranged for rigid mounting. Capacitor on top of motor. Terminals located in front end shield or on right hand side facing front.

Table 4-1. Motor application guide - continued.

APPLICATION	TYPE	USUAL HP	SPEED 60 HERTZ	VOLTAGE RATING 60 HERTZ	TEMPERATURE RISE COIL WINDINGS	NORMAL ROTATIONAL (FACING END OPPOSITE DRIVE SHAFT)	OTHER DISTINCTIVE FEATURES
Sump pumps and, basement or cellar drains.	Single-Phase: a. Split phase.	Usually 1/3.	1,725 rpm at full load.	Thermometer: 50° C. Resistance: 60° C.	Thermometer: Totally enclosed, 55° C. Open 40° C. Resistance: Totally enclosed, 64° C. Resistance, 50° C.	clockwise.	Dripproof: Two-ball bearing; or lower bearing sleeve-type; suitable for vertical mounting. Ball bearings should be replaced with care depending on mounting, in order to provide for adequate axial thrust capacity. Be aware of proper bearing application when installing new bearings.

Table 4-1. Motor application guide - continued.

APPLICATION	TYPE	USUAL HP	SPEED 60 HERTZ	VOLTAGE RATING 60 HERTZ	TEMPERATURE RISE COIL WINDINGS	NORMAL ROTATIONAL (FACING END OPPOSITE DRIVE SHAFT)	OTHER DISTINCTIVE FEATURES
Gasoline dispensing pumps.	single-phase: a. Capacitor-Start. b. Repulsion-Start. Polyphase, induction.	Usually 1/2.	1725 rpm at full load	Single phase, 115/230V polyphase, 220V, 230V.	Thermometer: 55° C. Resistance 65o C.	Clockwise.	Totally enclosed. explosion proof: sleeve bearings, usually. Nameplate on top of motor.
Oil Burners, mechanical draft.	Single-phase: a. Split phase	1/6, 1/3, 1/12	Same	115 V and 230 V.	Thermometer:55° C. Resistance 65o C.	Clockwise	Totally enclosed: nameplate marked "oil-burner motor."

Table 4-1. Motor application guide - continued.

APPLICATION	TYPE	USUAL HP	SPEED 60 HERTZ	VOLTAGE RATING 60 HERTZ	TEMPERATURE RISE COIL WINDINGS	NORMAL ROTATIONAL (FACING END OPPOSITE DRIVE SHAFT)	OTHER DISTINCTIVE FEATURES
Washing machines	Single-phase: a Split-phase.	1/3, usually	1725 rpm at full load	115V and 230V.	Thermometer: 50° C. Resistance 60° C.	Clockwise	Open or dripproof; depends on location: Horizontal: sleeve bearing. Usually provided with built-in connection box located on end opposite driven.
Centrifugal coolant pumps.	Single phase a. Split phase b. Capacitor Start. Polyphase: a. Squirrel cage, induction.	Capacitor-start: a. Up to 1/4, 115, 230 volts. b. 1/3 up to 3/4 115/230 volts.	Same	Split phase, 115V and 230V, Repulsion, 115V and 230V. Polyphase 208V, 220V, and 230V.	Thermometer: 55° C. Resistance 65° C.	Clockwise	Totally enclosed grease-lubricated ball bearings suitable for horizontal or vertical mounting.

Table 4-1. Motor application guide - continued.

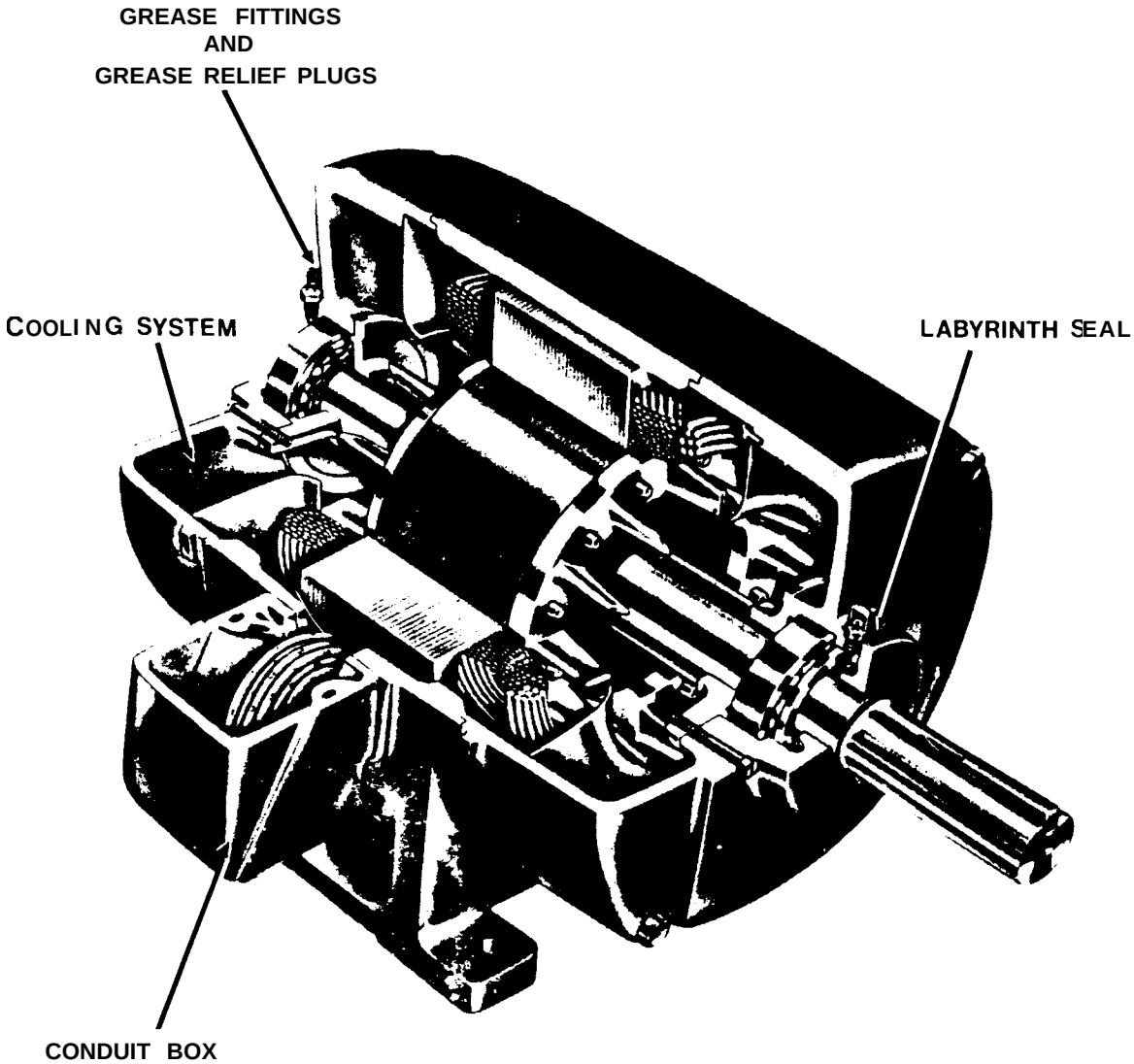

Figure 4–1. Cutaway view of squirrel-cage induction motor.

torque limitations. It may be used for power factor improvement since a synchronous motor operates at unity or a leading power factor (in addition to lagging power factor). They are also more efficient than some induction or DC motors having the same speed and power rating. But the higher cost, larger size per horsepower and lower starting torque are the disadvantages that limit synchronous unit application.

d. High-efficiency unit. This motor is specially designed to reduce electrical losses as much as 50 percent so that less electricity is used over the entire life of the motor. These motors also operate at higher power factor values which help avoid power factor penalties and reduce the cost of power factor correction. They can deliver longer service, are more reliable, and are more easily maintained than normal efficiency motors.

e. Components of AC machines. Maintenance operations on an AC motor will encompass maintenance on the following components.

(1) *Stator and rotor windings.* The primary parts of a typical motor are (fig 4–4): the frame and base that support the assembled motor; the stator which is the stationary part consisting of an iron core and insulated windings; and the rotor which is the rotating element. The term armature is often used in lieu of rotor, particularly with DC motors and for AC motors with commutators or collector rings and brushes. Most stator and rotor problems can be traced to winding failures. The life of a winding depends upon keeping it as near to its original condition as long as possible. Insulation failure causes immediate outage time. The following points should be carefully examined and corrective action taken during scheduled inspections to prevent operation failures.

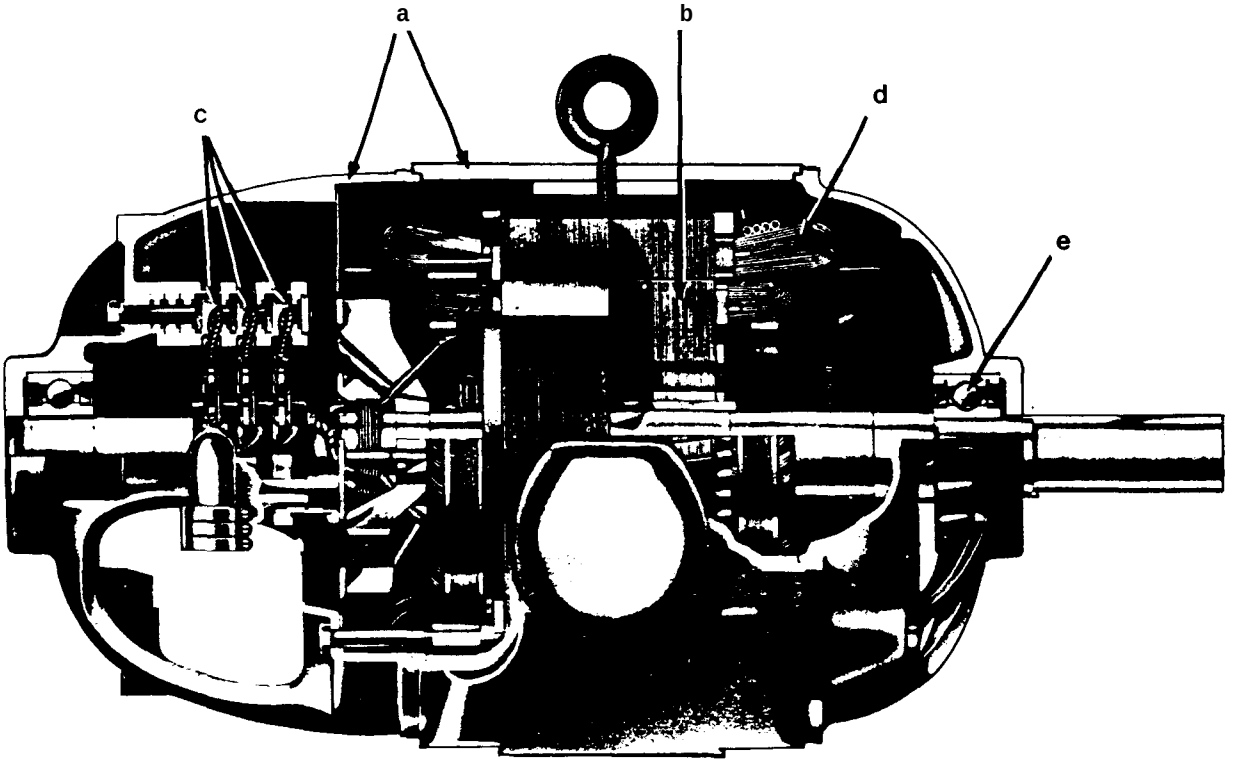

Figure 4-2. Cutaway View of Wound-Rotor Induction Motor: a) Housing, b) Roto Assembly, c) Slip Ring Brushes, d) Stator Windings, 3) Ball Bearings.

(a) Cleaning motor windings. Dust and dirt are almost always present in windings that have been in operation under average conditions. Dust combined with high humidity becomes highly conductive. It may break down the winding insulation and short circuit the motor windings. Frequent cleaning and drying may be necessary. Removing dry dirt with a clean, dry cloth is usually satisfactory if the apparatus is small and the surfaces to be cleaned accessible. Do not use any material that will leave lint, for lint will adhere to the insulation and collect even more dirt. For removal of loose dust, dirt and particles, vacuum cleaning is preferred rather than blowing out with compressed air since there is less possibility of damage to the insulation and less chances of conductive or abrasive particles getting into areas that may cause damage during motor operation. Where dirt cannot be vacuumed, compressed air blowing may be used. However, care should be taken that the dirt is not blown out of one machine into another. Air pressure should not be greater than 30 psi. The air should be dry and directed in such a manner as to avoid further closing ventilation ducts and recesses in insulation. Goggles or face shield should be worn when using compressed air to clean motors. Accumulated dirt containing oil or grease requires cleaning with a solvent. The solvent should be as recommended by the manufacturer. A rag, barely moistened (not wet) with a nonflammable solvent, may be used for wiping. Avoid liquid solvent spraying which can carry conductive contaminants into critical areas and contribute to short circuits and grounds. Apparatus which has been clogged with mud from dust storms, floods or other unusual conditions, will require a thorough water washing. Usually, a hose at pressures not exceeding 25 psi is used. After cleaning, the surface moisture should be removed immediately to keep the amount of water soaked up by the insulation to a minimum. Silicone-treated windings require special treatment, thus the manufacturer should be contacted for advice.

(b) Drying motor windings. If after cleaning, storing or shipping, tests indicate that the winding insulation resistance is below a safe level (para 4-5), then the motor should be dried before being placed in operation. Two general drying methods commonly used are external or internal heat. External heat is preferred since it is the safer application. When forced air is used (fig 4-5), it may be heated electrically or by steam. This method is usually inefficient and costly unless built into the original installation. Electrical space heaters or infrared lamps may be used. They should be distributed so as not to overheat the insulation. Coil insulation may be dried by circulating current through the

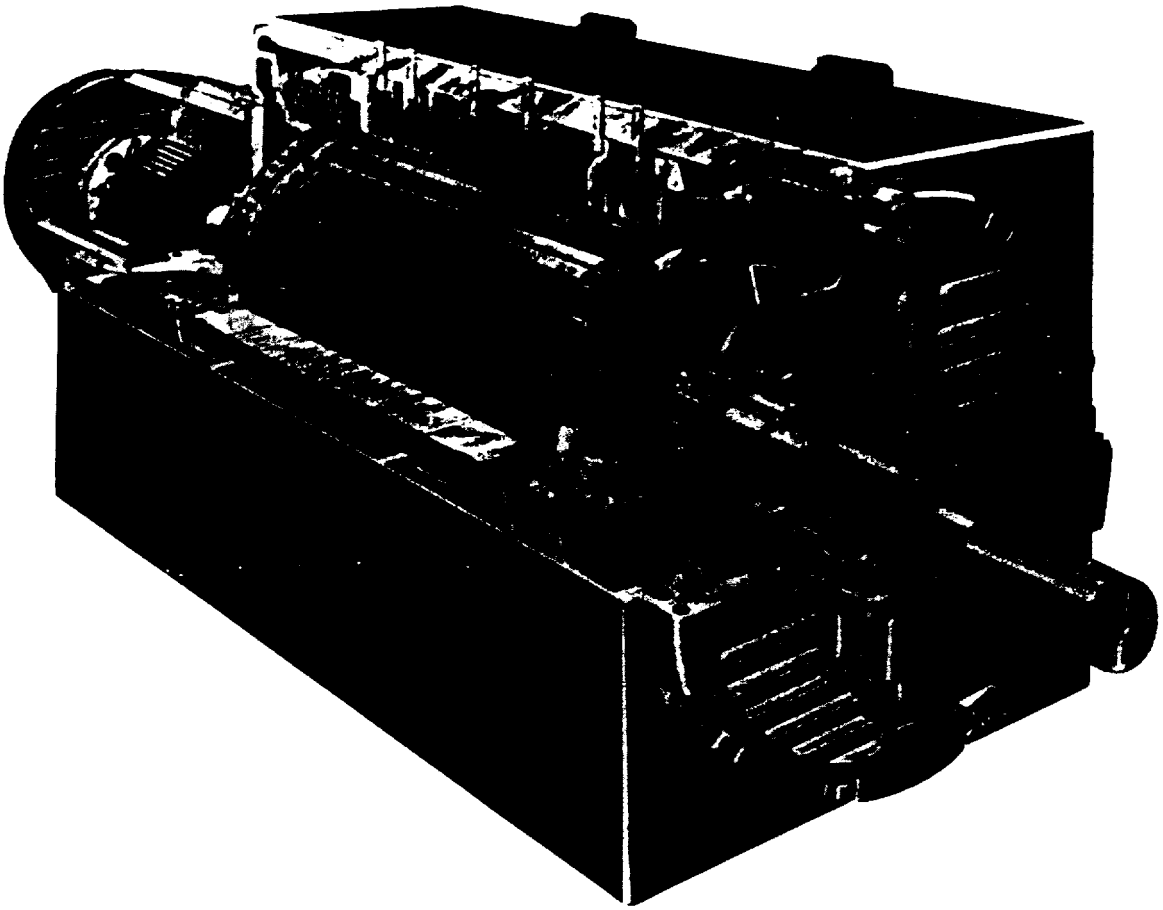

Figure 4-3. Cutaway view of synchronous motor.

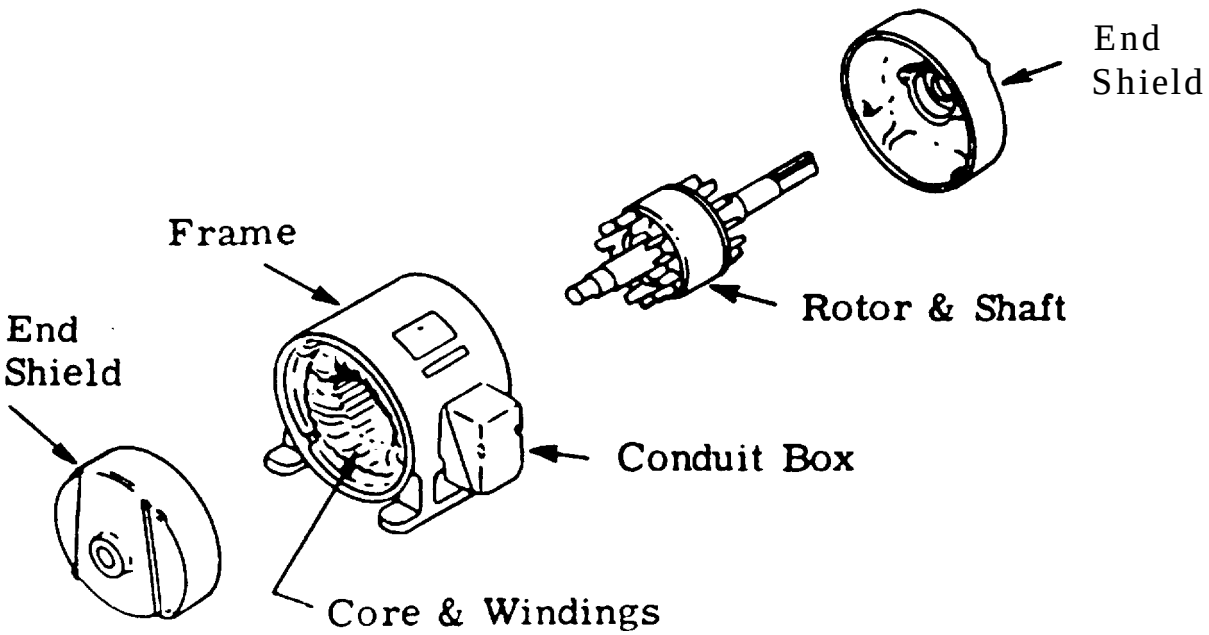

Figure 4-4. Primary parts of an AC induction motor.

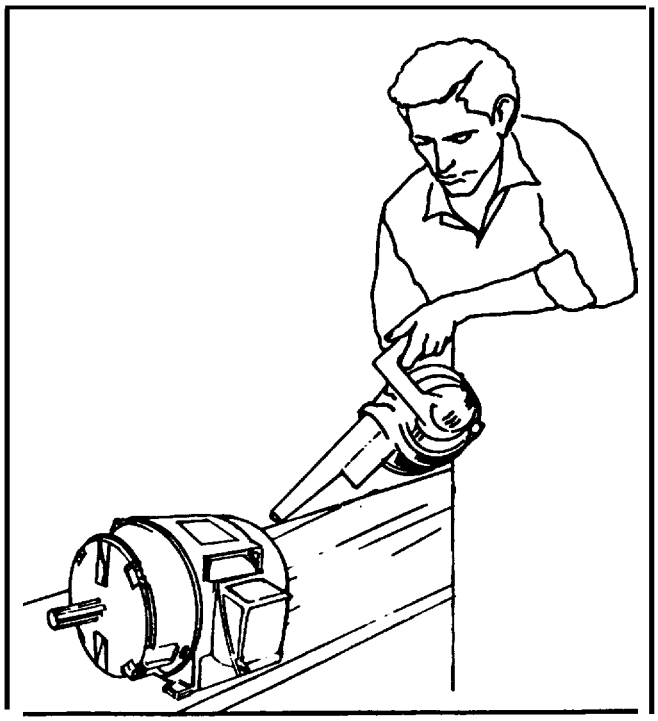

Figure 4-5 Cleaning and drying motors in place.

winding. However, there is some hazard since the heat generated in the inner parts is not readily dissipated. This method should be followed only under competent supervision. For synchronous motors, the "short circuit method" is sometimes used. This method is achieved by shorting the armature windings, driving the rotor and applying sufficient field excitation to give somewhat less than full load armature current. Once the drying process has been completed, insulation testing of the motor winding is recommended to determine whether the insulation has been properly reconditioned. If a motor must continue to operate in a damp environment, then special enclosures are necessary to limit the effects of a moist atmosphere.

(c) Inspecting motor windings. Check winding tightness in the slots or on the pole pieces. One condition which hastens winding failure is movement of the coils due to vibration during operation. Check insulation surfaces for cracks, crazing, flaking, powdering, or other evidence of need to renew insulation. Usually under these conditions, when the winding is still tight in the slots, a coat or two of air-drying varnish may restore the insulation to a safe value. Check the winding mechanical supports for insulation quality and tightness, the binding ring on the stator windings, and the glass or wire-wound bands on rotating windings. Examine squirrel-cage rotors for excessive heating or discolored rotor bars which may indicate open circuits or high resistance points between the end rings and rotor bars. The symptoms of such conditions are slowing down under load and reduced starting torque. Repairs to cast aluminum rotors with open bars are not feasible and such rotors have to be replaced. Copper bar rotors can usually be repaired by rebrazing the joints.

(2) *Bearings.* The bearings are the most critical mechanical part of a motor. To assure maximum life, bearings should be subjected to careful inspection at scheduled intervals. The frequency of inspection is best determined by a study of the particular motor operating conditions. Bearings are subject to metal fatigue and will eventually wear out even though they are correctly applied, installed and maintained. Fatigue failures are characterized by flaking of the race surfaces along the ball or roller. Fatigue is a gradual process, which is dependent upon load and speed and usually is made apparent in its early stages by an increase in the operating temperature, vibration or noise level of the bearing. Bearing failures not attributed to fatigue failure are usually classified as premature. The majority of these premature failures are caused by the following: incorrect bearing type; misalignment of the motor or load; misalignment or improperly installed bearing; rusting during storage; preloading or improper end-play adjustment; excessive thrust or radial force; axial indentations; improper lubrication and entrance of contaminants into bearing. Follow manufacturer's instructions and use lubricants as specified. When using greases, store in clean containers, handle with clean paddles or use a grease gun and keep containers covered. Do not overfill bearing housings. Overfilling contributes to heat build-up, damaged seals, leaks and collecting of dirt. Overheating is particularly true of bearings running at high speeds. Machines that are normally idle for long periods should be exercised on a scheduled basis. Exercising will keep the oil circulated, reduce condensation within the housing and lessen the chances of flat spots developing on the bearing races, balls or rollers. Inspect seals and vents regularly. Periodic maintenance services of bearings involves keeping a bearing dry, covered, clean and lubricated as well as checking operating temperature. A clean bearing is particularly critical because dirt means damage. It is therefore important to remember the following when cleaning bearings (fig 4-6):

(a) Work with clean tools in clean surroundings. Do not use wooden mallets, dirty, chipped or brittle tools, or work on rough or dirty bench tops.

(b) Remove all dirt from the housing before exposing the bearings and take care to prevent loose dirt from getting into the housing.

KEEP BEARINGS CLEAN

WRONG

New bearings should not be opened and exposed to dirt before they are ready to use.

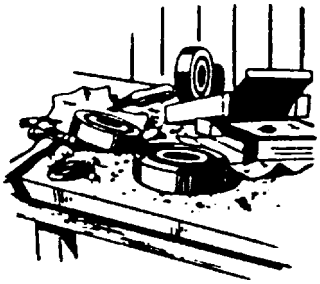

RIGHT

Bearing is opened on a clean bench and is not removed from package until ready to be installed.

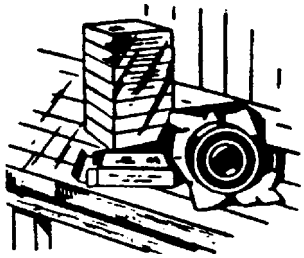

INSTALL BEARING PROPERLY

WRONG

Bearing should not be forced on shaft by means of the outer rings. It should not be forced on a badly worn shaft, or a shaft that is too large.

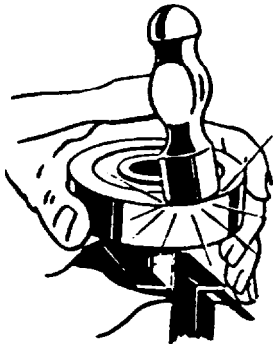

RIGHT

Bearing is proper size for the shaft and is being tapped into place by means of a metal tube that fits against the inner ring.

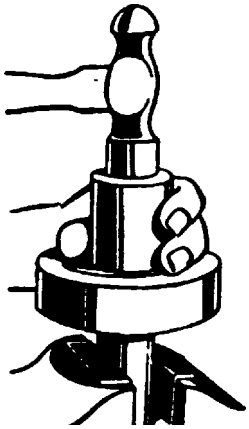

DO NOT TRY TO CLEAN NEW BEARINGS

WRONG

This new bearing does not have to be cleaned. The slushing oil on packed bearings should not be removed.

RIGHT

New bearing is removed from container and immediately installed. Packed bearings are already cleaner than you can make them.

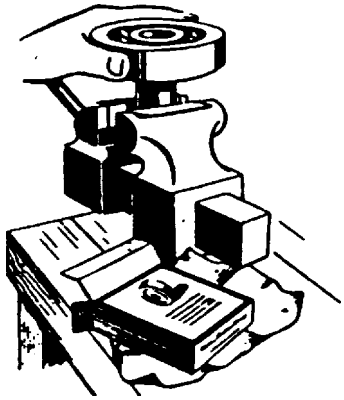

PROTECT OPERATING BEARINGS FROM DIRT

WRONG

Loose bearing covers permit dirt to get into bearing, causing excessive wear and heating.

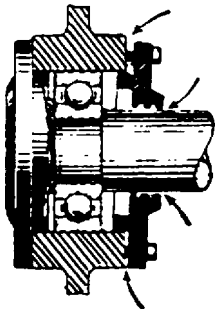

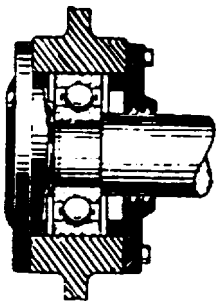

RIGHT

Protective covers are tight to prevent dirt getting into bearing.

Figure 4-6. Bearing installation precautions.

(c) Handle bearings with clean, dry hands in conjunction with a clean, lint-free rag. This will limit the chance of corrosion due to perspiration.

(d) Handle a reusable bearing as carefully as a new one.

(e) Use approved solvents and oils for flushing and cleaning. Apply fire-preventive precautions if the solvent or oil is flammable.

(f) Lay bearings out on clean paper. Keep bearings wrapped in oil-proof paper when not in use.

(g) Protect disassembled bearings from dirt and moisture.

(h) Do not spin uncleaned bearings. Rotate them slowly while washing. A bearing should not be judged good until inspected after cleaning.

(i) Do not spin any bearing with compressed air

(j) Soak bearings thoroughly in plenty of solvent. Then rinse them in a separate clean container of clean solvent. Once cleaned, inspect the bearing surfaces for nicks or scratches;. broken or cracked rings, separators, balls, or rollers; and discolored, overheated bearings. If the bearing is to be reused in a short time, dip it in rust preventive, wrap in grease-proof paper and store. For longer storage, coat all bearing surfaces with a light protective grease, wrap in grease-proof paper and store.

(k) Clean the inside of the housing before replacing bearings.

(l) *Keep* bearings in their original carton until ready for use if they are new. Do not wash the oil or grease out of a new bearing. Do not disassemble new bearings.

(m) Install bearings properly after cleaning.

(3) *Ball and roller bearings.* External inspection of ball and roller bearings (fig 4-7) at the time of greasing will determine whether the bearings are operating quietly and without undue heating. Equipped with a grease chamber, they can be very easily overgreased. Overgreasing may be prevented by opening the grease relief plug (fig 4-8) after greasing has been completed and running the motor. When excess grease has drained through the relief plug, secure the plug.

Since ball bearings are often sealed, they require little maintenance but it is very important that the grease be kept clean. This also applies to sealed housings (with the exception of permanently sealed bearings) which should be cleaned and regreased every 2 years or as recommended by the manufacturer. The bearing housings may be opened to check the condition of the bearings and lubricant. If the lubricant must be changed, the bearing and housing parts should be thoroughly cleaned and new lubricant added. Special instructions regarding the type or quantity of lubricant recommended by the manufacturer should be followed. In all cases, standard lubricating practices should be followed.

(4) *Sleeve bearings.* Sleeve bearings (fig 4-9) are most often used in fractional horsepower motors. For older types of sleeve bearings, the oil should be drained, the bearing flushed, and new oil added at least every year. Newer sealed type sleeve bearings require very little attention since the oil level is frequently the only check needed for years of service.

(5) *Insulation.* Failure of insulation is another major factor in motor breakdowns. Few types of insulation failures can be readily repaired. Insulation internal to the motor should be visually checked and defects further investigated. Heat is one of the principal causes of insulation failure in a motor. Make sure that the motor has adequate ventilation and that air openings are not obstructed. Also make sure that the motor is not overloaded which increases operating temperatures. Most motors are equipped with thermal overload devices applied directly to the motor winding which measure increases in temperature. At a predetermined temperature, the overload device will trip and disconnect the motor from the circuit. When an overload device has tripped, the operator should determine the cause of overheating, correct it if possible, and reset the overload before restarting the motor (para 5-4e). An indication of the condition of the insulation can be determined by performing an insulation resistance test (para 4-5).

4-3. Direct current (DC) motors.

On military installations, DC motors (fig 4-10) are used only if AC voltage is not available or where there is a wide range of speed control desired. The reason for using a DC motor is often solely to achieve speed control. DC motor speed can be varied intentionally by varying the field current on shunt wound motors or by varying the input voltage to either series or shunt motors. DC motors are classified into different types based on the connection of the various windings. Shunt and series are considered the two basic types of motors, as all others are derivatives of the two.

a. Shunt motors. The most widely used type of DC motor is the shunt wound motor. As the name implies, these machines have the armature and field circuits connected in parallel (shunt) to a constant source of voltage (fig 4-11a). While the term "shunt" is still used, relatively few motors are now applied in this way. Shunt motors as now applied have their field circuits excited by a source of power that is separate from the armature source of voltage. The field excitation voltage level is usually the

Ball Bearing

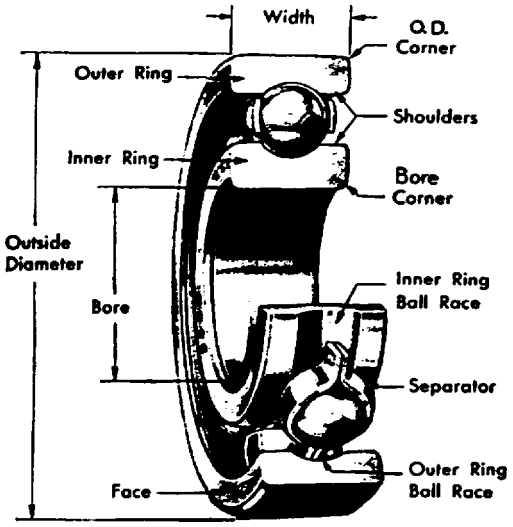

Straight Roller Bearing

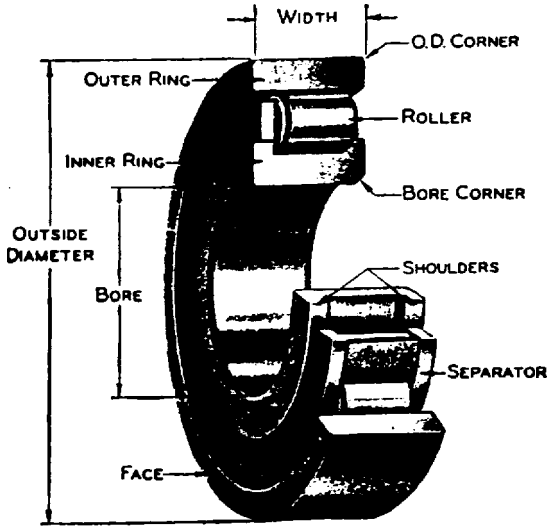

Ball Thrust Bearing

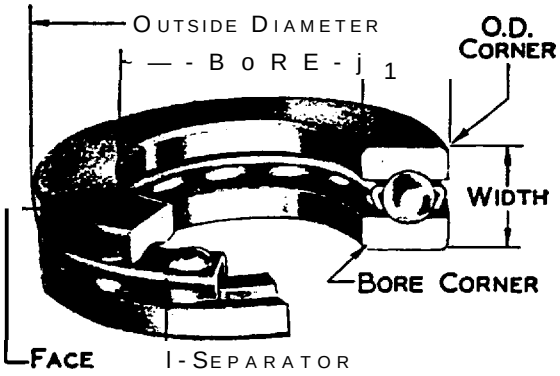

Tapered Roller Bearing

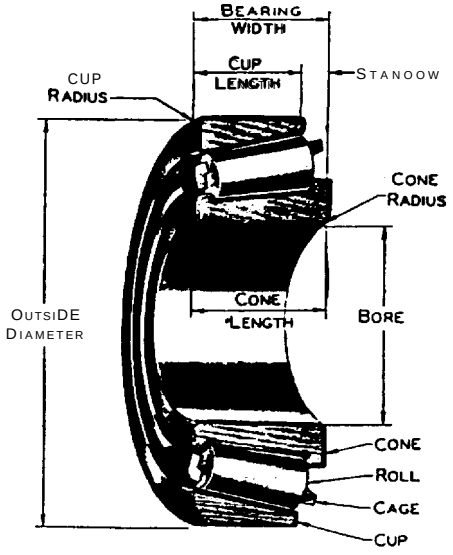

Needle Roller Bearing

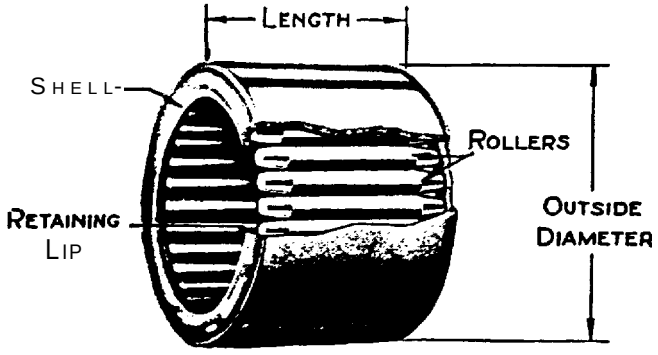

Figure 4-7. Construction of ball and roller bearings,

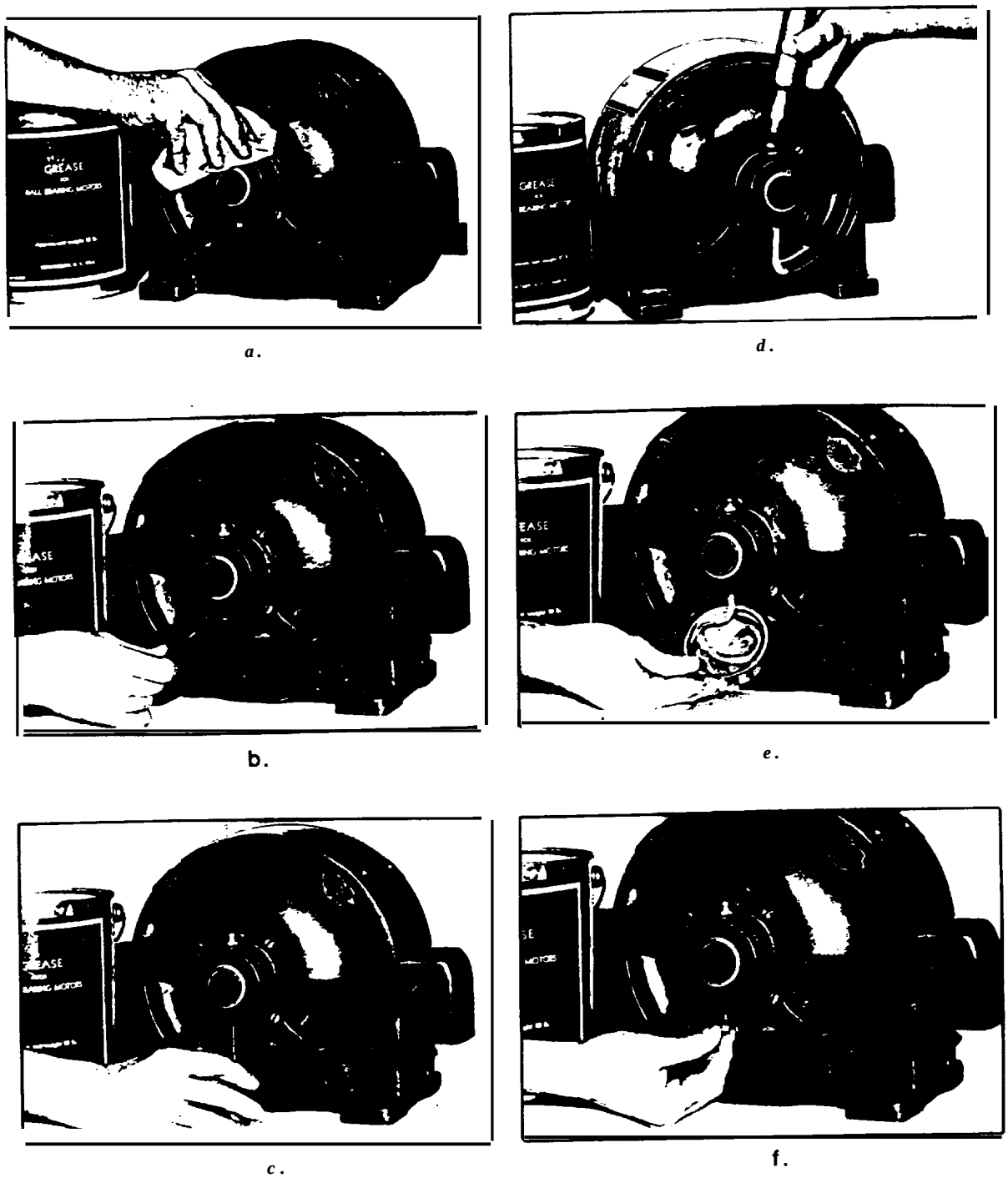

Figure 4-8. Greasing Bearings: a) Wipe away dirt from fitting or plug, b) Remove lower plug, c) Catch any run-out, d) Add new grease, e) Run motor and allow excess grease to escape, f) Install and tighten lower plug.

same as the armature voltage, however, special field voltage ratings of 15 to 600 volts are available for application as a modification. The shunt motor is characterized by its relatively small speed change under changing load.

b. Series motors. As the term implies, series motors have their field windings connected in series with the armature circuit, therefore, it carries full motor current (fig 4-11b). Series connection results in a characteristic whereby motor speed is a function of load. Thus, the series motor is a variable speed motor.

c. *Compound motors.* A motor which is built with both shunt and series fields is termed a compound wound motor (fig 4–11c). By proportioning the relative amounts of series and shunt windings, the designer may shift the motor characteristics to be more nearly shunt or more nearly series in nature.

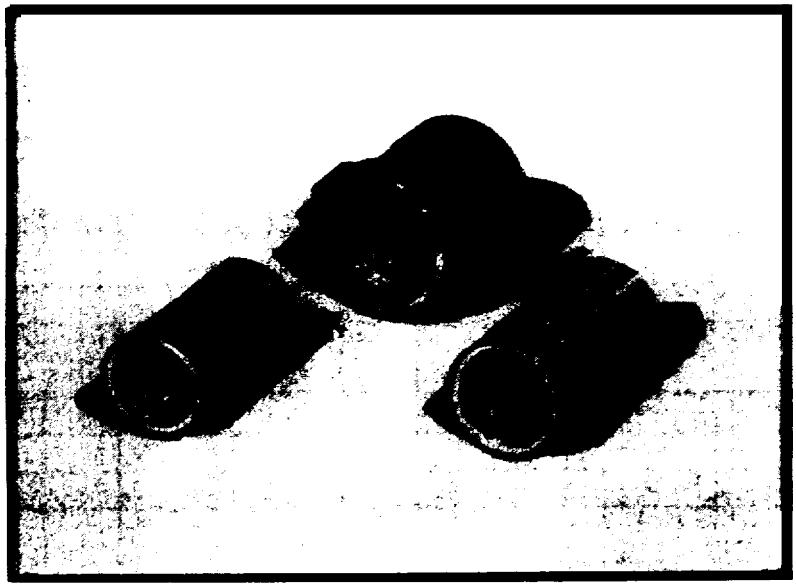

Figure 4-9. Typical sleeve bearings.

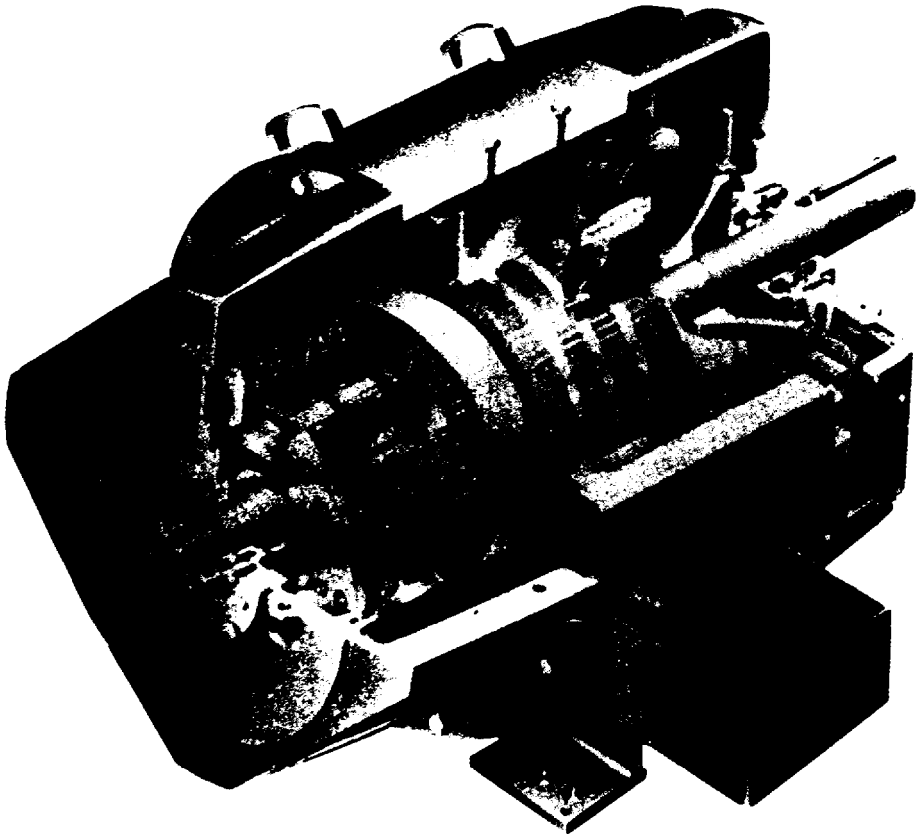

Figure 4–10. Cutaway views of a typical DC motor

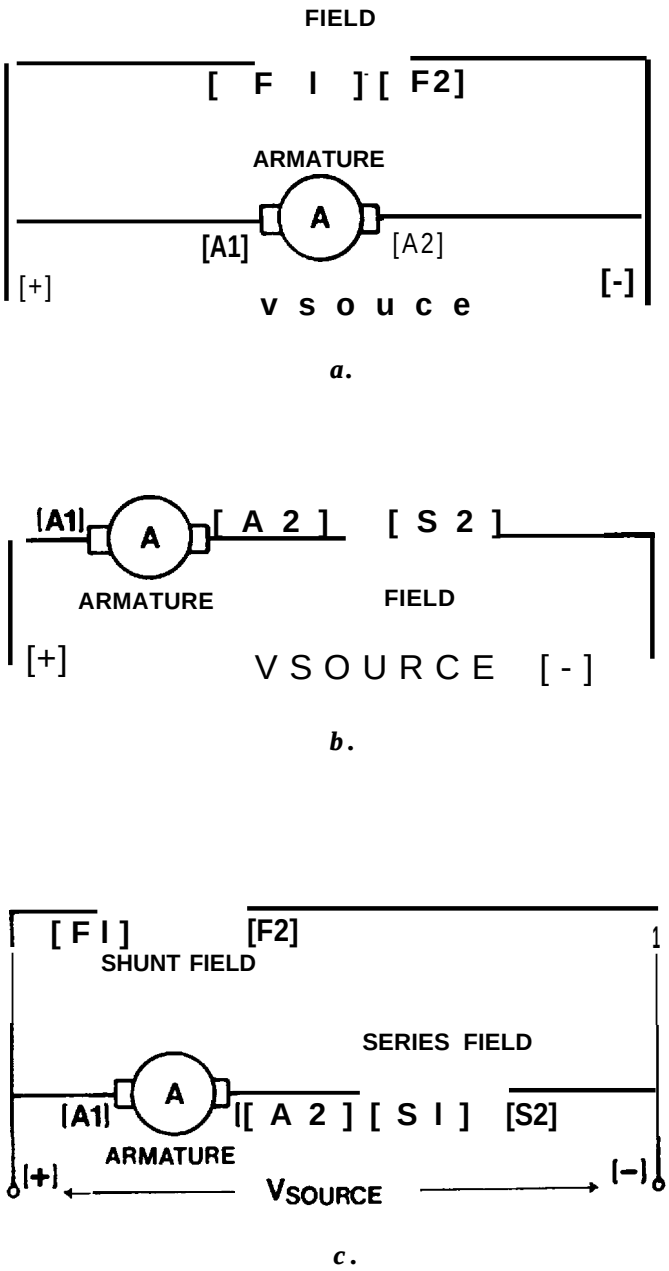

Figure 4–11. Main Types and Connections of DC Motors: a) Shunt motor b) Series motor c) Compound motor

d. Components of DC machines. The basic operating and maintenance requirements for DC motors are similar to those for AC motors. There are some special requirements due to the peculiar construction features of the DC motor. The recommendations that follow, particularly those for the armature (fig 4–12), also apply to AC synchronous motors, It is important that the armature be kept clean. Dust, grease, corrosive gases, moisture and oil are particularly harmful.

(1) *Field windings.* The field is made up of a frame with field poles fastened to the frame's inner circumference. The field windings, mounted on laminated steel poles, furnish excitation for the motor. Inspect field winding insulation and determine if they are dirty and oil-soaked. Check for malfunctioning controls which cause excessive field current that can cause excessive heating and failure. Other causes of winding heating are excessive voltage, insufficient speed, off-neutral brushes, overloads and partial short circuit in a field coil. Never run a DC motor with the field circuit open. If the field winding is open-circuited, the motor will fail to start or will operate at excessive speeds at light loads, and excessive sparking will occur at the commutator. Check the insulation resistance of the windings (para 4-5).

(2) *Brushes.* Maintenance and inspection of brushes should be performed regularly to ensure the following (fig 4-13):

(a) Brushes are not loose in their holders. Replace worn brushes. NOTE: Replacement brushes are of several types and grades. Successful motor operation depends upon proper selection of the replacement brush best suited for the service requirements of the motor.

(b) Brushes are not sticking in their holders. Clean brushes and holder.

(c) The tools and/or heels of the brush face are not chipped or cracked. Replace brush if damaged.

(d) Brush shunt leads are properly attached to the brushes and their holders. Replace brush if shunt lead is loose at the brush. Tighten if lead is loose at the holder.

(e) Correct brush tension is maintained. Readjust the brush spring pressure in accordance with the manufacturers' instructions when adjustment is provided. When adjustment is not provided, replace the spring.

(f) Brush holder studs are not loose. Tighten, if loose.

(g) Brushes are not discolored. Brushes should have a highly glazed or very dull finish. Clean the brushes when they become black or grey.

(h) Reset brushes at the correct angle.

(i) Reset brushes in the neutral plane.

(j) Properly space brushes on the commutator to 1/32 inch.

(k) Correctly stagger the brush holders.

(l) Properly space brush holders from the commutator (usually l/16 to 3/16 inch.). If the proper spacing is not maintained, the brushes will ride the surface of the commutator poorly. This is especially applicable to the motor using an inclined brush holder since the brush will be shifted to the neutral position, leading to poor commutation.

(m) Check to ensure that the correct grade of brush, as recommended by the manufacturer, is being used.

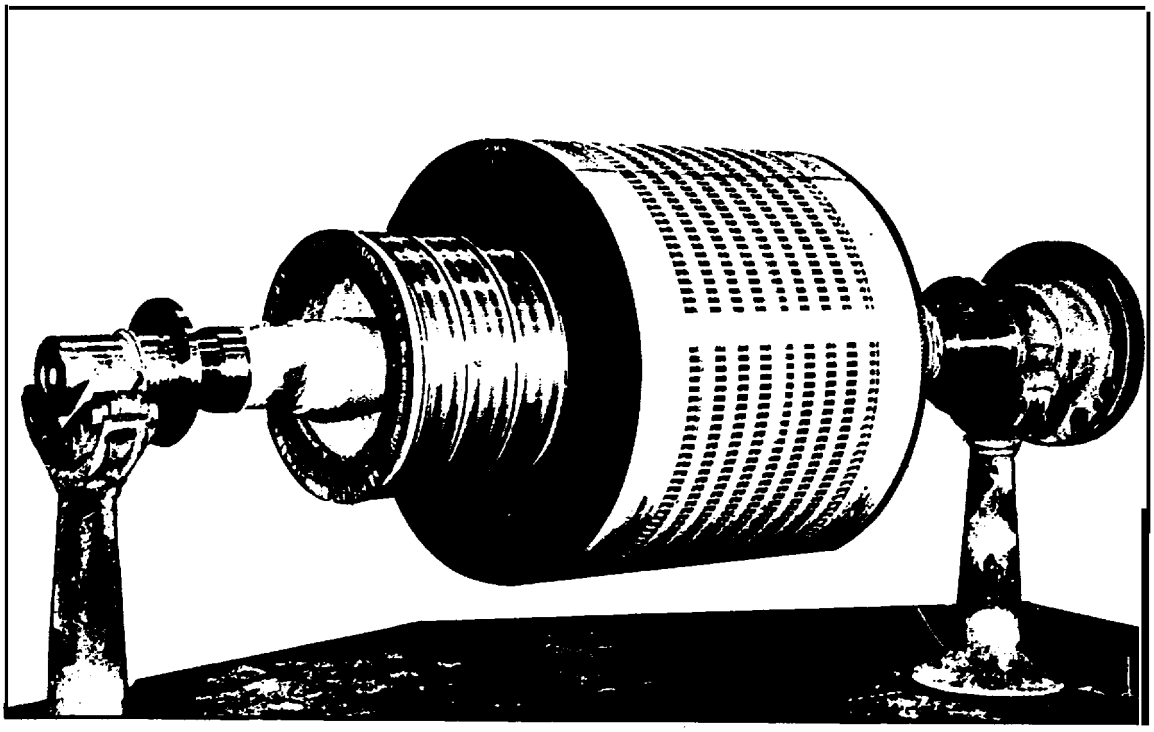

Figure 4-12. Armature of a large DC motor on stands.

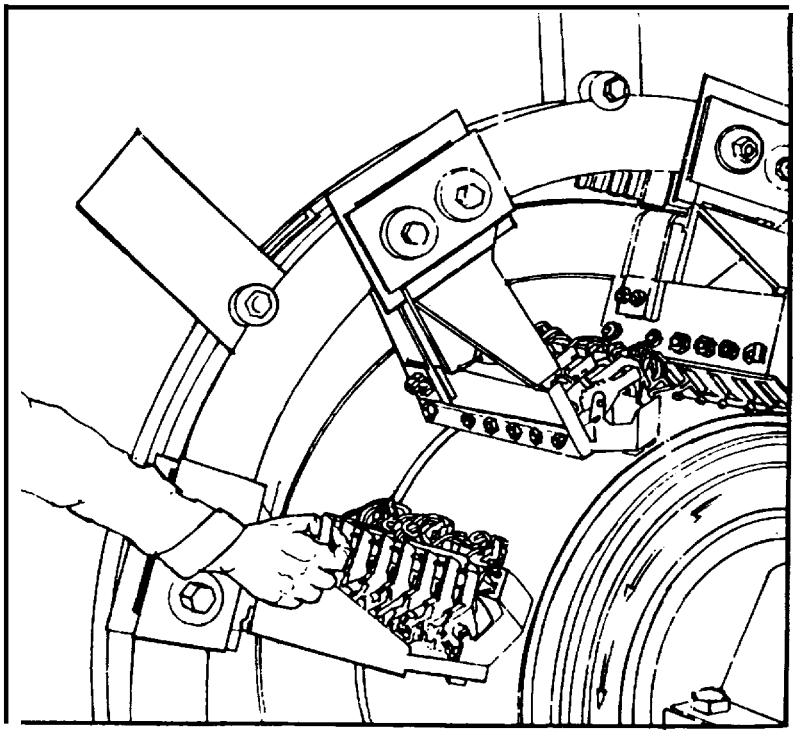

Figure 4-13. Inspecting and installing brushes on a large DC motor.

(3) *Commutators.* A cutaway section of a commutator is shown in figure 4-14. The primary source of unsatisfactory commutation is due to faulty operating conditions. Therefore, the principal maintenance function is that of keeping the commutator surface clean, concentric, smooth, and properly undercut. Surfaces of the commutator bars must be even and free of ridges so that the commutation is concentric, thus allowing any object held against it to react as though it were held against a smooth surface cylinder. Inspection and maintenance methods are as follows:

(a) Check for indication of brush chatter (fig 4-15). Brush chatter is most evident by chipped brushes. This condition results from either a poor commutator surface or high friction between the brush and commutator. High friction is normally caused by operating the motor under a light load, operating the motor under a load that exceeds the commutator's rated capacity for prolonged periods or, film build-up on the commutator. Remedies are: increase the load; reduce the load; and, clean the commutator respectively.

(b) Check for threading or streaking (fig 4-16). Threading or streaking of commutator surfaces is characterized by fine lines inscribed around the commutator. It results when copper particles transfer to the face of the brush. These particles cut through the commutator film, creating areas which carry more than their share of current. They also cause rapid wearing of the brushes and lead to commutator resurfacing. Use of natural graphite brushes, which have cleaning action, cuts down on the formation of film that hinders passing current. Maintenance personnel should check for any evidence of the lack of uniformity in brush action on the commutator surface and film. Evidence of such action should be corrected as soon as possible.

(c) Check for sparking. Sparking often results from poor commutation. This condition may be improved by repositioning the brushes so that they are slightly against rotation. When repositioning the brushes that do not provide better commutation, the commutating-pole air gap must be adjusted.

(d) Check for flashing. Flashing normally results from conditions that cause a sudden change in the field strength of the motor's current or voltage. Flashing can be prevented by frequent checks and elimination of conditions that contribute to short-circuiting.

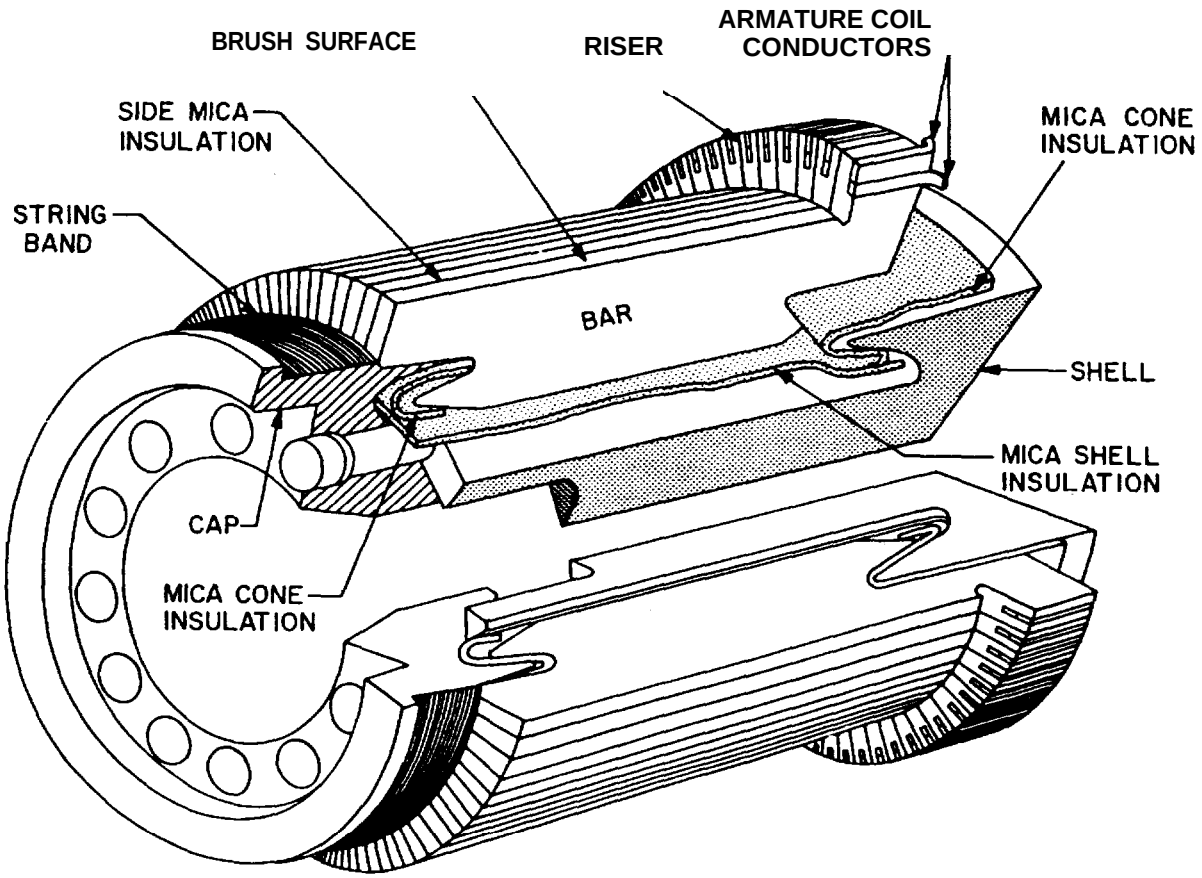

Figure 4-14. Cutaway section of a commutator.

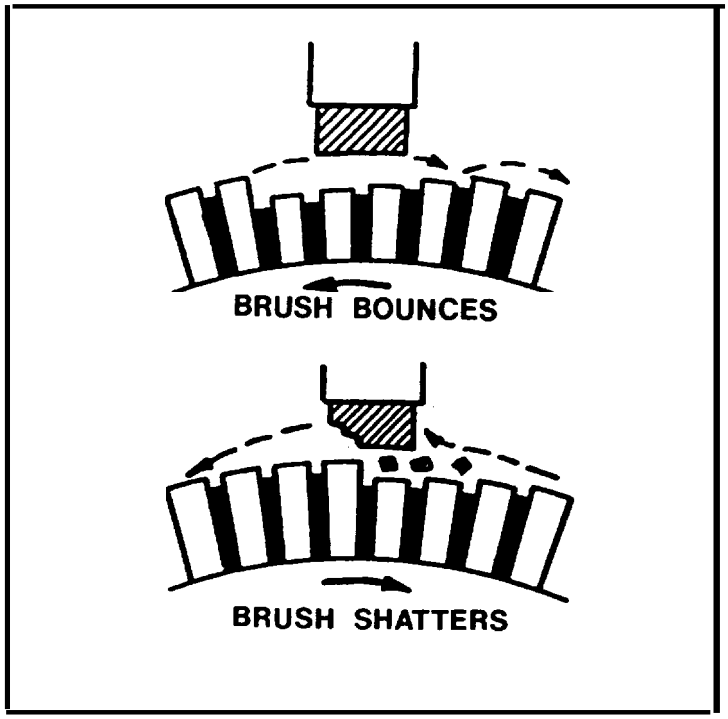

Figure 4-15. Brush "Chatter" Action.

(e) Check film on commutator for even and uniform color (fig 4-17). The color should be between light to dark brown. Clean the commutator as frequently as required to maintain the proper color.

(f) Copper pickup from the commutator surface, indicated when copper fragments become embedded in the brush faces, constitutes a danger signal and, unless corrected, becomes progressively worse. The condition can be corrected by providing proper bar-edge bevelling, sanding the brush faces, and thoroughly blowing out the motor after all other work has been completed.

(g) Check the commutator concentricity with a dial gauge (fig 4-18). A dial reading of .001 inch on high speed machines to several thousandths of an inch on low speed machines can be considered normal. When evidence indicates that the commutator is out of round or eccentric (fig 4-19), it can be restored by grinding" with a grinding rig. While grinding, vacuum frequently to prevent copper and stone grindings from getting into the windings. Grinding should be performed only by experienced personnel when the proper tools are available.

(h) After grinding the commutator, the mica insulation separating the copper segments must be undercut (fig 4-20). Bevel the edges of the bar and clean the commutator slots. Bevelling eliminates the sharp edge under the brush at the entering side. Again, follow the manufacturer's instructions in this repair function. Do not attempt this operation unless proper tools, instruments, and qualified personnel are available.

(i) After conditioning a commutator, ensure that it is clean of traces of copper, carbon, or other dust.

4-4. Motor operating considerations.

Often problems that cause motor breakdown and premature failure can be traced to inadequate consideration of operation and application of the motor. To enhance motor operation and improve longevity consider application, type of motor, horsepower, speed, voltage rating and environmental conditions (table 4-1). The following paragraphs reiterate the major causes of motor failures.

a. Dirt. Dirt can: plug ventilating spaces, interfering with proper cooling; glaze the faces of commutator brushes, resulting in harmfiul sparking; blanket windings, interfering with heat radiation and causing dangerous temperature rises; build into a hazard of shorting or grounding, if metallic particles are present and, cause complete motor breakdown.

b. Dust. In open-type motors, use every possible means of keeping out dust. Under no condition should dust be allowed to come in contact with the bearings. Keep the oil-fill caps closed at all times; maintain the dust seals and gaskets in good condition and replace them when worn. Keep plenty of clean rags available for wiping off the motor housings, cleaning commutators and removing dust from wound sections. Vacuum loose dirt within the motor. If vacuum cleaning is not effective, blow out the windings with dry compressed air at a pressure not

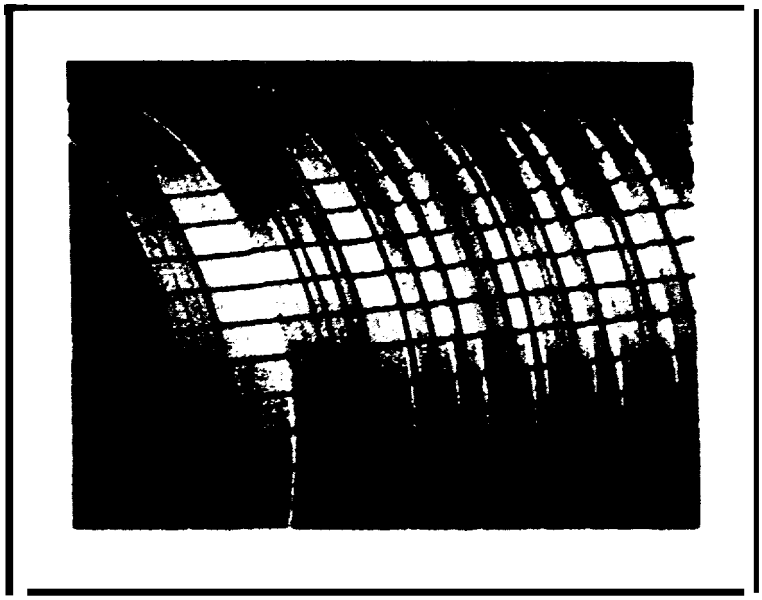

a.

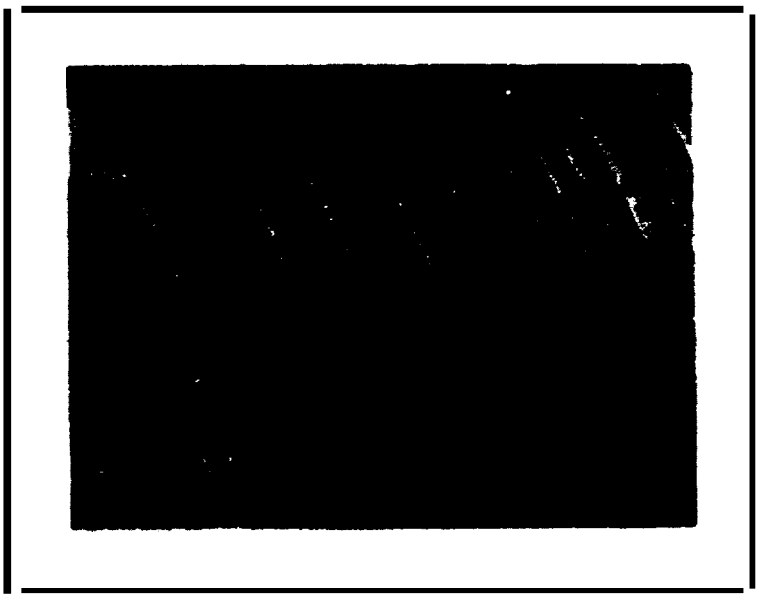

b.

Figure 4-16. Poor Commutator Conditions: a) "Threading", b) "Streaking".

to exceed 30 psi. Greater pressure may loosen the insulation and blow dirt under it. If blowing or vacuuming will not remove accumulated dirt, use solvents as recommended by the motor manufacturer.

c. Moisture. Moisture soaks into and softens winding insulation until it is no longer adequate as an insulator. When moisture gets inside a motor, it unites with dirt to form a sticky mass. This mass absorbs acid fumes and alkali fumes present in the air. These fumes quickly change the mass into an active destructive agent and a conductor of leakage currents. Moisture preventive measures are simple and therefore will not be discussed in detail. However, close attention to good housekeeping methods is necessary. Open-type motors should not be exposed to intrusion of water from drip or splatter. Standby motors should be run for a short time at least once a week to guard against moisture condensation during periods of idleness. Before using an

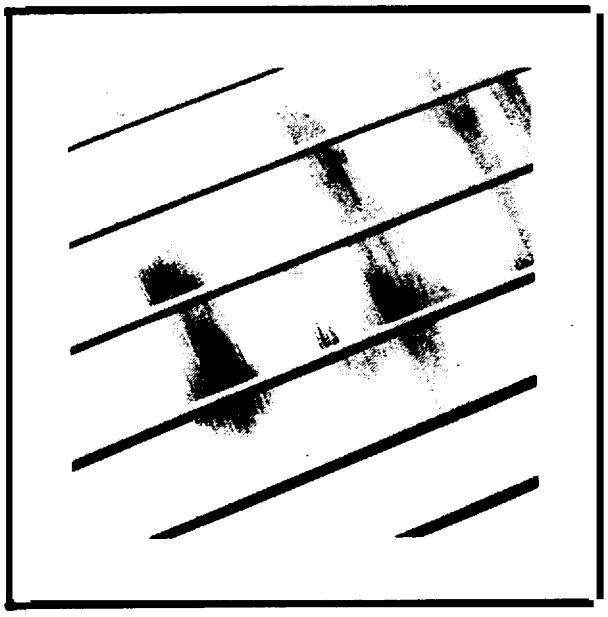

a.

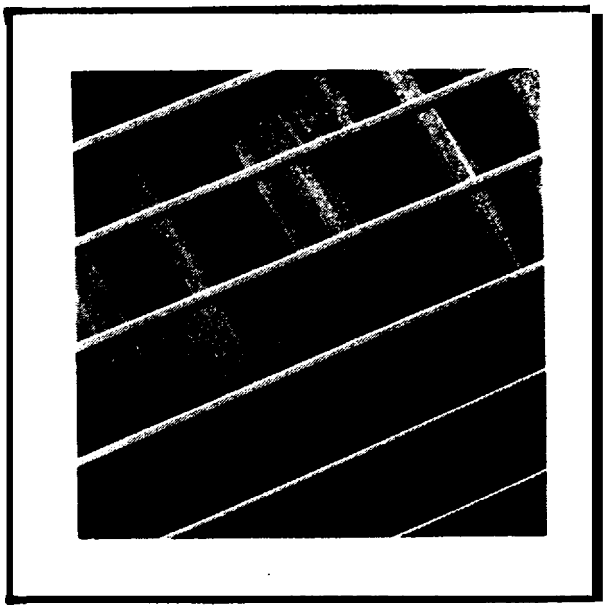

b.

Figure 4-17. Good Commutator Films: a) A light, mottled surface, b) Heavy film of nearly uniform color.

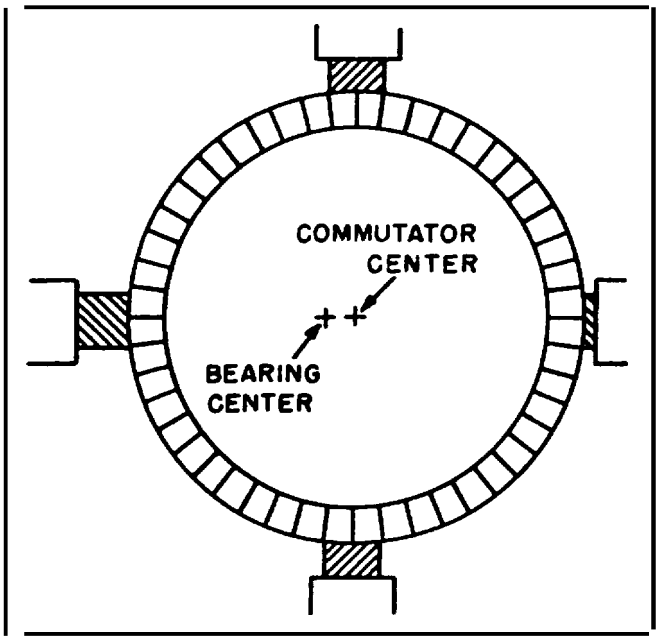

Figure 4-18. Example of eccentric commutator.

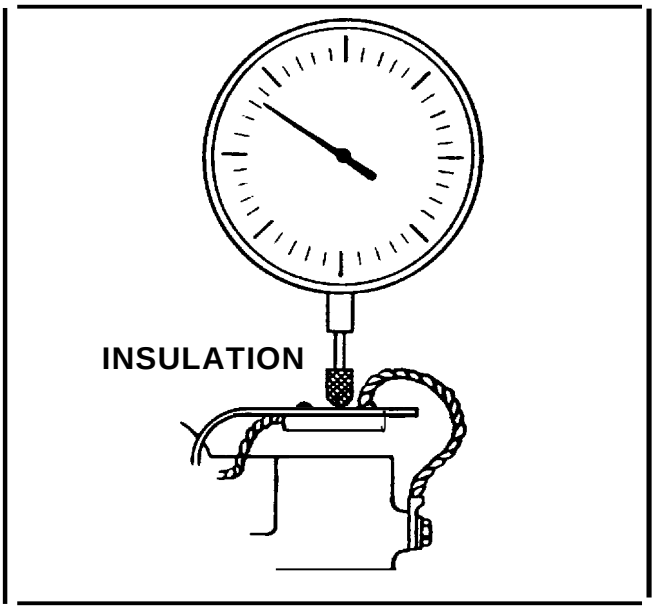

Figure 4-19. Dial gauge to measure commutator concentricity.

air line to blow out motor windings, first check to be sure that water has not condensed in the line.

d. Friction. Many motors fail because of excessive friction. Oil in sleeve bearings adheres to the shaft and is dragged along by rotation, forming a lubricating film that prevents friction. It is important to use the right oil at the right time and not too much. Follow the manufacturer's instructions. Do not add new oil while the motor is running since it is easy to add too much. Check the oil while the motor is stopped and, if required, add oil to the full level. Excess oil is apt to leak into the motor and cause damage such as:

(1) Deteriorate the mica-insulating segments between commutator bars.

(2) Foul the commutator bars.

(3) Soak windings to the point where rewinding may be the only way to prevent burnout breakdown of the motor.

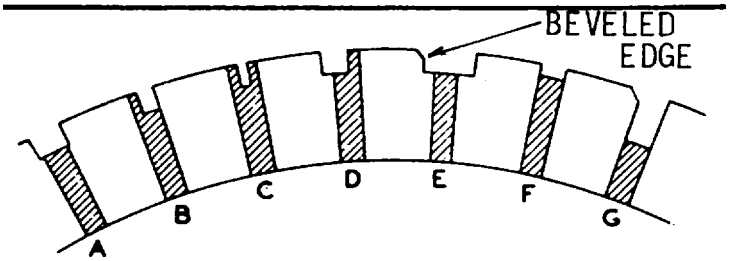

A. MICA PROPERLY UNDERCUT.
B. UNDERCUTTING TOOL TOO NARROW, LEAVING FIN AT ONE SIDE OF SLOT.
C. UNDERCUTTING TOOL VERY NARROW, LEAVING FINS AT BOTH SIDES OF SLOT.
D. SLOT IMPROPERLY INDEXED. PART OF BAR CUT AWAY AND FIN OF MICA LEFT.
E. TOOL TOO WIDE. PART OF BAR CUT AWAY.
F. UNDERCUTTING T00 SHALLOW. SERVICE LIFE SHORTENS BEFORE NEXT UNDERCUTTING.
G. UNDERCUTTING TOO DEEP. POCKET COLLECTS CARBON AND COPPER DUST, SHORT-CIRCUITING BARS.

Figure 4-20. Common undercutting mistakes.

e. Installation. One of the most important antifriction precautions for motors with ball or roller bearings is to ascertain that the bearings are properly installed. The inner race should be tight enough on the shaft to rotate with it, but not so tight as to cause frictional distortion. Ball or roller bearings are normally lubricated with grease, and as in the case of oil lubricants mentioned above, apply grease in accordance with the manufacture's instructions.

f. Vibration. Excessive vibration can loosen various parts, break electrical connections, crystallize portions of the metallic structure and contribute to an increase in frictional wear. Checks should be made regularly to identify conditions that contribute to vibration such as misalignment, settling of the foundation, heavy floor loading, and excessive bearing wear particularly when records indicate freequent motor failures. Check to determine whether vibration in the driven machine is being transmitted to the motor. Check that the motor is properly applied for a particular load. Check for excessive belt or chain tension. The trouble may lie in the push-apart effect inherent in spur gears. Check for motor-shaft oscillation resulting from a loose bearing. Check for loose motor-mounting bolts.

g. Applied voltages. For general purpose applications, a range of five percent under to five percent over the nameplate voltage may be applied with satisfactory results. A motor with a nameplate rating of 230 volts will give reasonable performance on: 220, 230 and 240-V systems. A motor with a single voltage rating of 230V will probably overheat if run on 208V. Most manufacturers recognize this problem and build extra capacity into the windings to give a dual or triple voltage rating on the nameplate, that is: 208/230/240 volts. There are some cases where motors fail due to low voltage. If a given motor is fully loaded or slightly overloaded, it will operate within its temperature limits for normal voltages. For voltages 90 percent and less of the nameplate rating, the same motor will severely overheat. The motor will fail if the low voltage condition is applied for long periods of time. The important thing to remember is that, in the example given above, a fully loaded motor must have 100 percent of its nameplate conditions in order to deliver 100 percent of its capacity. A motor that only needs to deliver 80 percent of its nameplate horsepower rating will most likely survive a prolonged low voltage condition resulting in a somewhat higher than normal temperature. This is sometimes referred to as "service factor". Motor performance guarantee is based on its nameplate rating and not the system nominal voltage. The relationship between the nominal and nameplate rating is shown in table 4-2.

h. Choice. There is usually some choice in the substitution of voltages for the motors and applications shown in table 4-2. It is not necessary to

Table 4-2. Nameplate voltage ratings of standard induction motors.

Nominal System Voltage	ANSI/NEMA MG1-1978 Nameplate Voltage
Single-phase rotors	
120	115
240	230
Three-phase motors	
208	200
240	230
480	460
600	575
2400	2300
4160	4000
4800	4600
6900	6600
13,800	13,200

(a) From ANSI/IEEE Std. 141-1984

"special order" rewinding repairs or replacements for general purpose work. There are some cases where substitution cannot be used. An exact voltage replacement should be ordered if:

(1) The motor is known to be delivering 100 percent or more, continuously.

(2) Motor has a duty rating other than "continuous" or "24 hours".

(3) Motor is marked, "special purpose", or "severe duty" on nameplate.

(4) A non-standard voltage is shown and no horsepower rating is given.

4-5. Motor insulation testing.

The electrical test most often conducted to determine the quality of low voltage motor armature and winding insulation is the insulation resistance test. There are other tests available to determine the quality of motor insulation, but they are not recommended for low voltage motor testing because they are generally too complex or destructive. An insulation resistance test should be conducted on rotating machinery immediately following their shutdown when the windings are still hot and dry. A megohmmeter (para 13–4) is the recommended test equipment. It should be applied to armature and rotating or stationary field windings. Before testing the motor insulation, de-energize the circuit. Then disconnect any potentially low insulation sources, such as lightning arresters, capacitors and other voltage sources. Lead-in cables or busses and line-side circuit breakers or starters can be tested as a part of the circuit provided a satisfactory reading is obtained. Motor test connections for AC and DC motors are shown in figure 4-21. If the insulation resistance is below the established minimum, the circuit components should be tested separately to isolate the source of low impedance. All data should be recorded and compared to previous periodic readings. Any persistent downward trend is an indication of insulation trouble even though the values may be higher than the recommended minimum acceptance values which are:

AC and DC motor (250V or less) 500,000 OHMS

AC and DC motor (1OOOV or less) 1 MEGOHM

4-6. Motor trouble-shooting.

Tables 4-3, 4-4 and 4-5 provide detailed data on troubleshooting motor breakdowns. Motor troubles along with their probable cause(s) and recommended maintenance or corrective actions are also given.

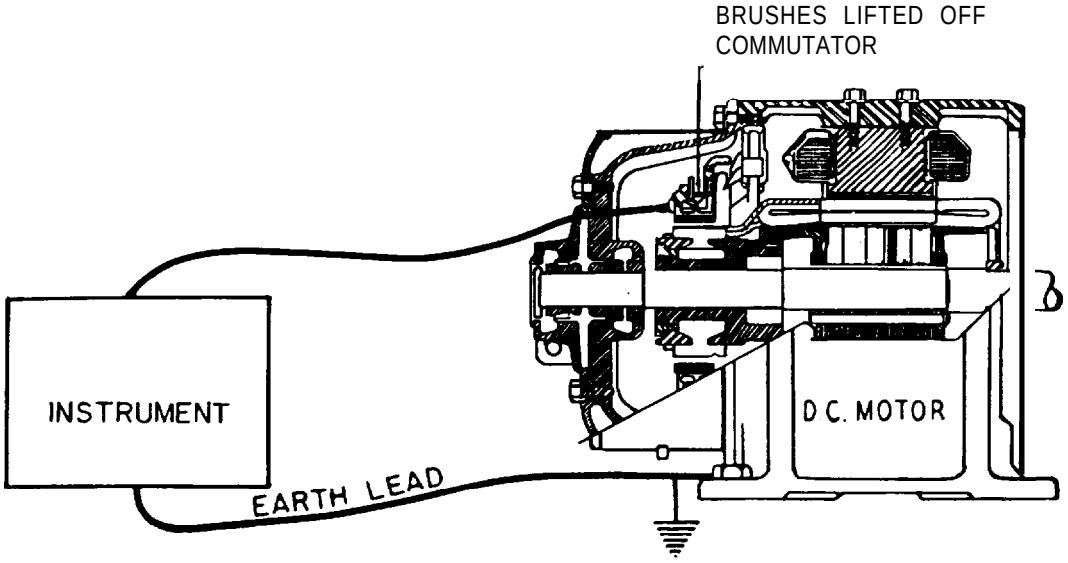

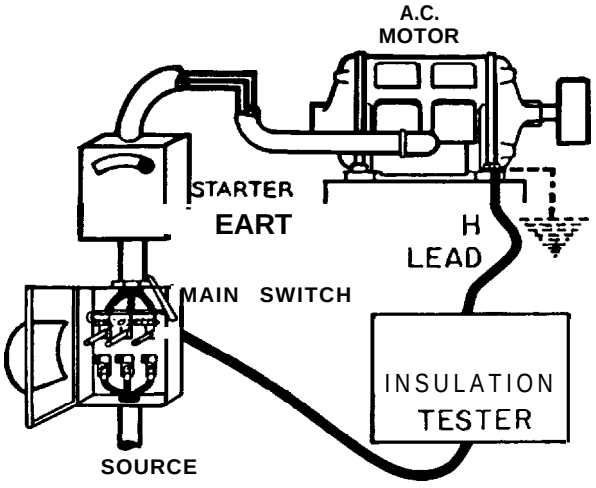

Figure 4-21. Connections for Testing Motor Insulation Resistance: a) (Top) connections for a DC motor b) (Bottom) connections for an AC motor.

Table 4-3. AC induction motor trouble-shooting.

Trouble	Probable Cause	Maintenance
Motor will not start	Overload Control Trip	Wait for overload to cool. Try starting again. If motor still does not start, check, all the causes as outlined below.
	Power not connected to motor.	Connect power to control, check control sequence and power to motor.
		Check Connections.
		Test fuses and circuit breakers.
	Faulty (Open) fuses.	Check motor-nameplate values with power supply. Also check voltage at motor terminals with motor under load to be sure wire size is adequate.
	Low voltage.	Check connections with control wiring diagram.
	Wrong conrol connections.	Tighten Connections.
	Loose Terminal- lead connction.	Disconnect motor from load. If rotor starts satisfactorily, check driven machine.
	Driven machine Locked.	Check for open circuits.
	Open Circuit in stator or rotor windi ng.	Check for shorted coil.
	Short circuit in stator winding.	Test for grounded winding.
	Winding grounded.	Free bearings or replace.
	Bearing Stiff.	Use special lubricant for special conditions
	Grease too stiff.	Troubleshoot the control
	Faulty control.	Reduce Load
	Overload.	Isolate and discharge capacitor check impedance. If opened or shorted, replace.
	Failed starter capacitor.	Stop motor, than try to start. It will not start on single phase.
Motor noisy.	Motor running single phase.	Check for "open" in one of the lines or circuits.
		Check current balance.
	Electrical load unbalanced.	Check aligment and condition of belt. On pedestal-mounted bearing, check cord play and axial centering of rotor.
	Shaft bumping (sleeve-bearing motors).	

Table 4-3. AC induction motor trouble-shooting-continued

Trouble	Probable Cause	Maintenance
Motor vibrates.	Vibration from unbalanced or misalignment	Balance or align machine.
	Possible mechanical system resonance.	Remove motor from load. If motor is still noisy, rebalance motor.
	Air gap not uniform.	Center the rotor and if necessary replace bearings.
	Noisy ball bearings.	Check lubricants. Replace bearings if noise is persistent and excessive.
	Loose punchings or loose rotor on shaft.	Tighten all holdings bolts.
	Rotor rubbing on stator.	Center the rotor and replace bearings if necessary.
	Objects caught between fan and end shields.	Disassemble motor end clean it. Any rubbish around motor should be removed.
	Motor loose on foundation.	Tighten holding-down bolts. Motor may possibly have to be realigned.
	Coupling loose.	Check coupling joint. Check alignment. Tighten coupling.
At higher than normal temperature or smoking.	Overload.	Measure motor Loading with watt-meter. Reduce toad.
	Electrical Load unbalanced.	Check for voltage unbalance or single phasing.
	Fuse blown, faulty, control, etc.	Check for "open" in one of the lines or circuits.
	Restricted ventitation	Clean air passages and windings.
	Incorrect Voltage and frequency	Check motor-nameptate values with power supply. Also check voltage at motor terminals with motor under full load.
	Motor stalled by driven machine or by tight bearings.	Remove power from motor. Check machine for cause of stalling.
	Stator winding sorted.	Use insulation testing procedures.
	Stator winding grounded.	Use insulation testing procedures.

Table 4-3. AC induction motor trouble-shooting-continued.

Trouble	Probable Cause	Maintenance
At higher than normal temperature or smoking (Cont'd)	Rotor winding with Loose connections.	Tighten, if possible, or replace with another rotor.
	Belt too tight.	Remove excessive pressure on bearings.
	Motor used for rapid reversing service.	Replace with motor designed for this service.
Bearings Hot	End shields loose or not replaced properly.	Make sure end shieds fit squarely and are properly.
	Excessive belt tension or excessive gear side thrust.	Reduce belt tension or gear pressure end realign shafts. See that thrust is nott being transferred to motor bearing.
	Bent shaft.	Straighten Shaft.
Sleeve Bearings hot.	Insufficient oil.	Add oil - if oil supply is very low - drain, flush and refill.
	Foreign material in oil or poor grade of oil.	Drain oil, flush, and relubricate using industrial lubricant recommend by a reliable oil company.
	Oil rings rotating slowly or not rotating at all.	Oil too heavy; drain and replace.
		Oil ring has work spot; replace with new ring.
	Motor titled too far.	Level motor or reduce tilt and realign, if necessary.
	Rings bent or otherwise damaged in reassembling.	Replace rings.
	Ring out of slot (oil ring retaining clip out of place).	Adjust or replace retaining clip.
	Defective bearings or rough shaft.	Replace bearings. Resurface shaft.
Ball bearings hot.	Too much grease	Remove relief plug and let motor run. If excess grease doe not come out, flush and relubricate.
	Wrong grade of grease	Add proper grease
	Insufficient grease.	Remove relief plug and regrease bearing.
	Foreign material in grease	Flush bearings, relubricate; make sure that grease supply is clean. (Keep covered when not in use).
	Bearings misaligned	Align motor and check bearing-housing assembly. See that races are exactly 90 degrees with shaft.

Table 4-3. AC indution motor trouble-shooting-continued.

Trouble	Probable Cause	Maintenance
Ball bearings hot (cont'd.)	Bearings damaged (corrosion, etc.)	Replace bearings.
	Coupling loose.	Check coupling joint. Check alignment. Tighten coupling.
Wound rotor motor troubles		
Motor runs at low speed with external resistance cut out.	Wires to control too small.	Use larger cable to control.
	Control too far from motor.	Bring control nearer motor.
	Open circuit in rotor circuit (including cable to control).	Test to find open circuit and repair.
	Brushes sparking.	Check for looseness, overload, or dirt.
	Dirt between brush and ring.	Clean rings and insulation assembly.
	Brushes stuck in holders.	Use right size brush, clean holders.
	Incorrect brush tension.	Clean brush tension and correct.
	Rough collector rings.	Sand and polish.
	Eccentric rings.	Turn in lathe or use portable tool to true up rings without disassembling motor.
Excessive vibration and noise.	Open rotor circuit.	Correct open connectons or control.
	Current density of brushes too high (overload).	Reduce load. (If brushes have been replaced, make sure they are of the same grade as originally furnished.
	Ring threading	Low current density. Consult manufacturer for different brush recommendation.
Motor will not start	Faulty Connection.	Inspect for open or poor connect ion.
	Open circuit one phase.	Test, locate and repair.
	Short circuit one phase.	Open and repair.
	Voltage falls too low.	Reduce the impedance of the external circuit.

Table 4-3. AC induction motor trouble-shooting--continued.

Trouble	Probable Cause	Maintenance
Motor will not start (cont 'd)	Friction high	Make sure bearings are properly lubricated.
		Check bearing tightness.
		Check belt tension.
		Check load friction.
		check alignment.
	Field excited.	Be sure field-applying contactor is open and field-discharge contractor is closed through discharge resistance.
	Load too great.	Remove part of load
	Automatic field relay not working.	Check power supply to solenoid.
		Check contractor tips.
		Check connections.
	Wrong direction of rotation.	Reverse any two main leads of 3-phase motor.
		Single-phase, reverse starting winding leads.
Motor will not come up to speed.	Excessive load.	Decrease the load.
		Check operation of unloading device (if any) on driven machine.
	Low voltage.	Increase voltage.
	Field excited.	Be sure field-applying contactor is open, and field-discharge contactor is closed through discharge resistance.
Fails to pull into step.	No field exc itation.	Check circuit connections. Be sure field applying contactor is operating.
		Check for open circuit in field or exciter.
		Check exciter output.
		Check rheostat.
		Set rheostat to give rated field current when field is applied.
		Check contacts of s witches.

Table 4-3. AC induction motor trouble-shooting-continued.

Trouble	Probable Cause	Maintenance
Fails to pull into step (cont'd).	Load excessive	Reduce load
		Check operation of loading device (if any) on driven machine.
	Inertia of load excessive.	May be a misapplication - consult manufacturer.
Motor pulls out of step or trips breaker.	Exciter voltage low.	Increase excitation.
		Examine exciter as shown in D. C. motors. Check field ammeter and its shunt to be sure reading is not higher than actual current.
	Open circuit in field and exciter circuit.	Locate and repair break.
	Short circuit in field.	Check with low voltage and polarity indicator and repair field.
	Reversed field spool.	Check with low voltage and polarity indicator and reverse incorrect leads.
	Load fluctuates widely.	See motor "hunts", below.
	Excessive torque peak.	Check driven machine for bad adjustment, or consult motor manufacturer.
	Power fails.	Re-establish power circuit.
	Line voltage too low.	Increase if possible. Raise excitation.
Motor "hunts".	Fluctuating load.	Correct excessive torque peak at driven machine or consult rotor manufacturer.
		If driven machine is a compressor check valve operations.
		Increase or decrease flywheel size.
		Try decreasing or increasing motor field current.
Stator overheats in spots .	Rotor not centered.	Realign and shim stator or bearings.
	Open phase.	Check connections and correct.
	Unbalanced currents.	Loose connections; improper internal connections.
Field overheats.	Short circuit in a field coil.	Replace or repair.
	Excessive field current.	Reduce excitation until field current is at nameplate value.

Table 4-3. AC induction motor trouble-shooting-continued.

Trouble	Probable Cause	Maintenance
All parts overheat (cont'd).	Overload	Reduce load or increase motor size.
		Check friction and belt tension or alignment.
	Over or under excitation.	Adjust excitation to nameplate rating.
	NO field excitation.	Check circuit and exciter.
	Improper voltage.	See that nameplate voltage is applied.
	Improper ventilation	Remove any obstruction and clear out dirt.
	Excessive rooms temperature.	Supply cooler air.

Table 4-4. AC synchronous motor trouble-shooting.

Trouble	Probable Cause	Maintenance
Motor will not start.	Faulty connection.	Inspect for open or poor correction.
	Open circuit one phase.	Test, locate and repair.
	Short Circuit one phase.	open and repair.
	Voltage falls too low.	Reduce the impedance of the external circuit.
	Friction high.	Make sure bearings are properly lubricated.
		Check bearing tightness.
		Check belt tension.
		Check load friction.
		Check alignment.
	Field excited.	Be sure field-applying contactor is open and field-discharge contactor is closed through discharge resistance.
	Load too great.	Remove part of load.
	Automatic field relay not working.	Check power supply to solenoid.
		Check contactor tips.
		Check connections.
	Wrong direction of rotation	Reverse any two main leads of 3-phase motor.
		Single-phase, reverse starting winding leads.
Motor will not come up to speed.	Excessive load.	Decrease the load.
		Check operation of unloading device (if any) on driven machine
	Low voltage	Increase voltage.
		Be sure field-applying contactor is open, and field-discharge contactor is closed through discharge resistance.

Table 4-4. AC synchronous motor trouble-shooting-continued.

Trouble	Probable Cause	Maintenance
Fails to pull into step.	No field excitation.	Check circuit connections. Be sure field-applying contactor is operating.
		Check for open circuit in field or exciter.
		Check exciter output.
		Check rheostat.
		Set rheostat to give rated field currant when field is applied.
		Check contacts of switches.
	Load excessive.	Reduce load
		Check operation of reloading device (if any) on driven machine.
	Inertia of load excessive.	May be misapplication - consult manufacturer.
Motor pulls out of step or trips breaker.	Exciter voltage low.	Increase excitation.
		Examine exciter as shown in D. C. motors. Check field ammeter and its shunt to be sure reading is not higher than actual currant.
	Open circuit in field and exciter circuit	Locate and repair break.
	Short circuit in field.	Check with low voltage and polarity indicator and repair field.
	Reversed field spool.	Check with low voltage and polarity indicator and reverse incorrect leads.
	Load fluctuates widely.	See motor "hunts" below.
	Excessive torque peak.	Check driven machine for bad adjustment, or consult motor manufacturer.
	Power fails.	Re-establish power circuit.
	Line voltage too low.	Increase if possible, raise excitation.

Table 4-4 AC synchronous motor trouble-shooting-continued.

Trouble	Probable Cause	Maintenance
Motor "hunts".	Fluctuating load.	Correct excessive torque peak at driven machines or consult motor manufacturer.
		If driven machine is a compressor check value operations.
		Increase or decrease flywheel size.
		Try decreasing or increasing motor field current.
Stator overheats in spots.	Rotor not centered.	Realign and shim stator or bearings.
	Open phase.	Check connections and correct.
	Unbalanced currents.	Loose connections: improper internal connections.
Field overheats.	Short circuit in a field coil.	Replace or repair.
	Excessive field current.	Redutce excitation until field current is at nameplate value.
All parts overheat.	Overload	Reduce load or increase motor size.
		Check friction end belt tension or aligment.
	Over or under excitation.	Adjust excitation to nameplate rating.
	NO field excitation.	Check circuit and exciter.
	Improper voltage.	See that nameplate voltage is applied.
	Improper ventilatiion.	Remove any obstruction and clean out dirt.
	Excessive room temperature.	Supply cooler air.

Table 4-5. DC motor or generator trouble-shooting.

Trouble	Probable Cause	Maintenance
Motor will not start.	Open circuit in control.	Check control for open in starting circuit, open contacts, fuse or breaker.
	Low terminal voltage.	Check voltage with nameplate rating.
	Bearing frozen.	Recondition shaft and replace bearing.
	Overload.	Reduce load or use larger motor.
	Excessive friction.	Check lubricaton in bearings to make sure that the oil has been replaced after installing motor.
		Disconnect motor from driven machine, and turn rotor by hand to see if trouble is in motor.
		Strip and reassemble motor; then check part by part for proper location and fit.
		Straighten or replace bent or spring shaft (machines under 5 hp).
	Brushes not down on commtator.	Held up by brush springs, need replacement.
	Brushes worn out.	Replace brushes.
	Brushes stuck in holders.	Remove and sand, clean up brush boxes.
	Power may be off.	Check line connectons to starter with light.
		Check contacts in starter.
Motor starts, then stops and reverses direction of rotation.	Reverse polarity of generator that supplies power.	Check generating unit for cause of changing polarity.
	Shunt and series fields are bucking each other.	Reconnect either the shunt or series field in order to correct the polarity. Then connect armature leads for desired direction of rotation. The fields can be tried separately to determine the direction of rotation individually and connected so that both give same rotation.

CHAPTER 5

MOTOR CONTROLS

5-1. Functions of motor controls.

The terms, controls, controllers, and starters are used interchangeably. The most common name for the device that controls the operation of the motor is starter. This name is not the best description of the device as the starter does much more than start the motor. It also stops the motor, it provides overload and short circuit protection, and it disconnects the motor from the line after a period of overcurrent. It may also contain auxiliary devices that limit the motor inrush current, torque, and/or speed. Additional protection features may include undervoltage, phase reversal, and/or field loss.

5-2. Types of motor controls.

Some of the more common motor starters are described in this chapter beginning with the elementary document starter and ending with the more complex adjustable speed frequency starter.

a. *Document across-the-line starters.* Document starters are most often used on small single phase fractional horsepower motors. They usually consist of a push button-type or a toggle-type mechanism (fig 5-1) that actuates a set of quick-make/quick-break contacts that connect the motor directly to the line. Document starters have provisions for overload protection and their low cost provides economical starter selection for applications where no undervoltage protection is required.

b. Magnetic across-the-line starters. Magnetic starters are suitable for application over a wide range of horsepower and voltage for both single and three phase motors. Magnetic starters are full voltage starters designed to provide thermal overload and undervoltage protection for squirrel cage motors and can be operated remotely from push button stations or automatically, for example, through a float switch. They differ from document starters in that they contain a contactor which, when its electromagnetic coil is energized, closes its line contacts to connect the motor directly to the line (fig 5-2). The primary purpose of a motor starter is to provide thermal overload protection, it is not designed to interrupt fault current. A short circuit study must always be performed to determine if protection is necessary from fault currents and, if so, short circuit protection must be provided. A circuit breaker, or fuses, upline of the contactor gives fault current protection to the starter and the motor. Starters must always include thermal overload relays. Exceptions are noted in NEC 430. Starters without overloads are called contractors. The holding coil of a magnetic starter (or contactor) is designed to drop out whenever line voltage drops below about 60 percent of its normal value, thereby providing undervoltage protection to the motor or load.

c. Combination starters. All motors, motor circuits and controllers require short-circuit and ground-fault protection. This may be located with the starter as in a combination starter or may be the branch-circuit short-circuit and ground-fault protective device as in a manual motor starter. (NEC 430, part D). Starters connected to a power distribution system with an available fault current in excess of the starter short circuit interrupting capacity must be protected from that fault current. Combining a contactor with a thermal overload relay is called a magnetic motor starter and combining a magnetic motor starter with a circuit breaker or fuses in a common enclosure is called a combination starter. These starters carry an interrupting rating that indicates the ability of all components in the integrated combination starter to withstand momentary overcurrent and thermal effects. Depending upon the type of short-circuit protective device employed, combination starters (fig 5-3) may be classified as breaker-protected starters, fuse-protected starters or fused breaker-protected starters.

(1) *Breaker-protected starters.* Breaker-protected starters use almost exclusively molded-case breakers. Low voltage power circuit breakers have sometimes been applied, especially for use on larger motors- Breakers, as compared to fuses, are slower in fault clearing for higher magnitudes of short circuit currents. Consequently, three pole breakers afford the least protection against thermal overload relay and contactor damage. However, they offer positive protection against single phasing. Breakers are usually designed for both thermal and magnetic protection even though the overloads are the best thermal protection because overload relay heaters can be very closely selected to cause tripping at precise values of current flow. Motor circuit protectors (MCPs) used in combination starters are magnetic trip only and have no thermal trip device.

(2) *Fuse-protected starters.* Fuse-protected starters provide the best degree of starter and thermal overload relay protection particularly for severe short circuits (fig 5-4). The disadvantages of fused-

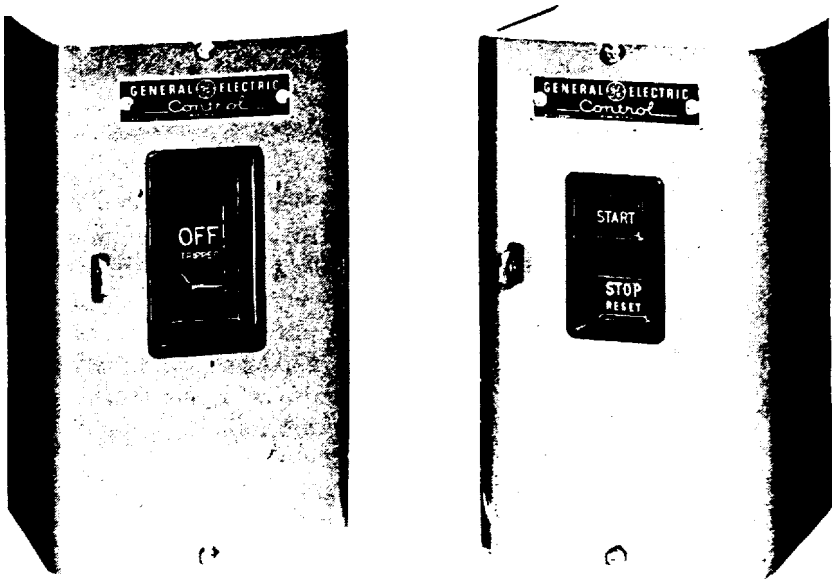

Figure 5-1. Manual starters

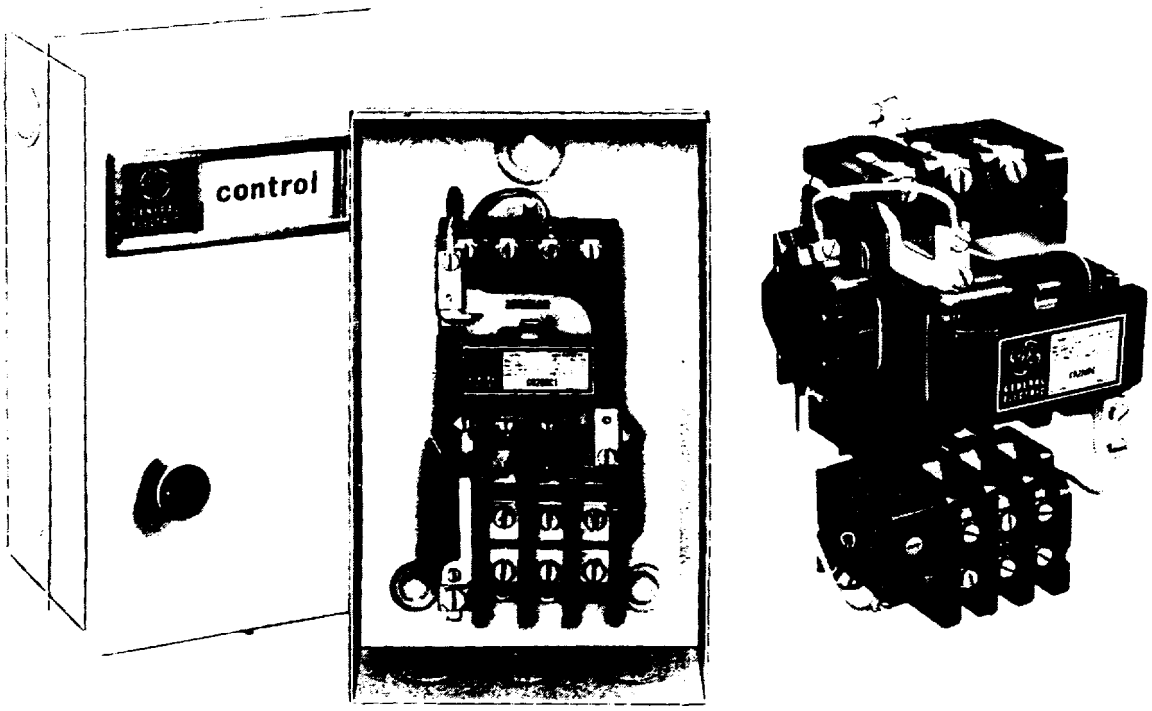

Figure 5-2. Typical magnetic starter

combination starters are possible single-phasing and incorrect replacement of fuses.

(3) *Fused breaker-protected starters.* Fused breaker-protected starters use a specific current-limiting fuse to back up a breaker of specified type and make to obtain a higher interrupting rating for the combination while maintaining the advantages of three-phase interrupters.

d. Reduced voltage starters. Reduced voltage starters provide power to motors at lower starting voltages resulting in reduced inrush currents and reduced starting torques. Several types of starters are discussed below.

(1) *Autotransformer starters.* These starters generally insert autotransformers or reactors in series with the motor windings to limit starting cur-

Table 15-3. Interior wiring and lighting system.

RESPONSIBILITY	FREQUENCY	CHECK	REF.
Maintenance Group (Operator/ Electricians	Each scheduled building visit	Unauthorized or nonstandard attachments	
		Defective convenience outlets and switches.	
		Improper cords.	
		Proper fuse sizes in panels.	5-4-4
		Overheating of panels.	
		Any condition likely to cause fire. Check battery-type emergency lights and replacement lamps.	
		Check for Iamps larger than standard prescribed for outlet.	9-7
		Replace burnt out lamps in hard-to-reach places. (To be accomplished by electrical shop if special equipment such as ladder trucks are needed).	9-6
User	As Required	Panels for circuit idenificaton and accessibility.	5-4-1
		Replace blown fuses.	5-4-4
		Replace burnt out or defective incandescent lamps.	9-6
		Replace burnt out fluorescent lamps if personnel have been instructed in this function and if assigned to user. Promptly replace or report defective lamps since a lamp approaching bum out flashes on and off, causing overduty on auxiliary equipment.	9-6
Electrician	As required.	Make repairs **and** adjustments to systems when malfunctions are reported. Ensure that all work complies with the NEC	
Electrician	As required.	Check ground resistance for special weapons facilities at request of user.	14-5
		Check for low voltages and/or low power factor.	13-2
Electrician	Monthly or Annually	Inspect station (substation switchgear or UPS) as follows:	
		(1) Check electrolyte level and add distilled water if needed. (2) Check charging rate. Adjust charging rate as necessary to maintain proper specific gravity. (3) Test for proper operation under simulated power interruption. Check maintenance free batteries. Check voltage, check and clean terrminal/connection.	2-8-3

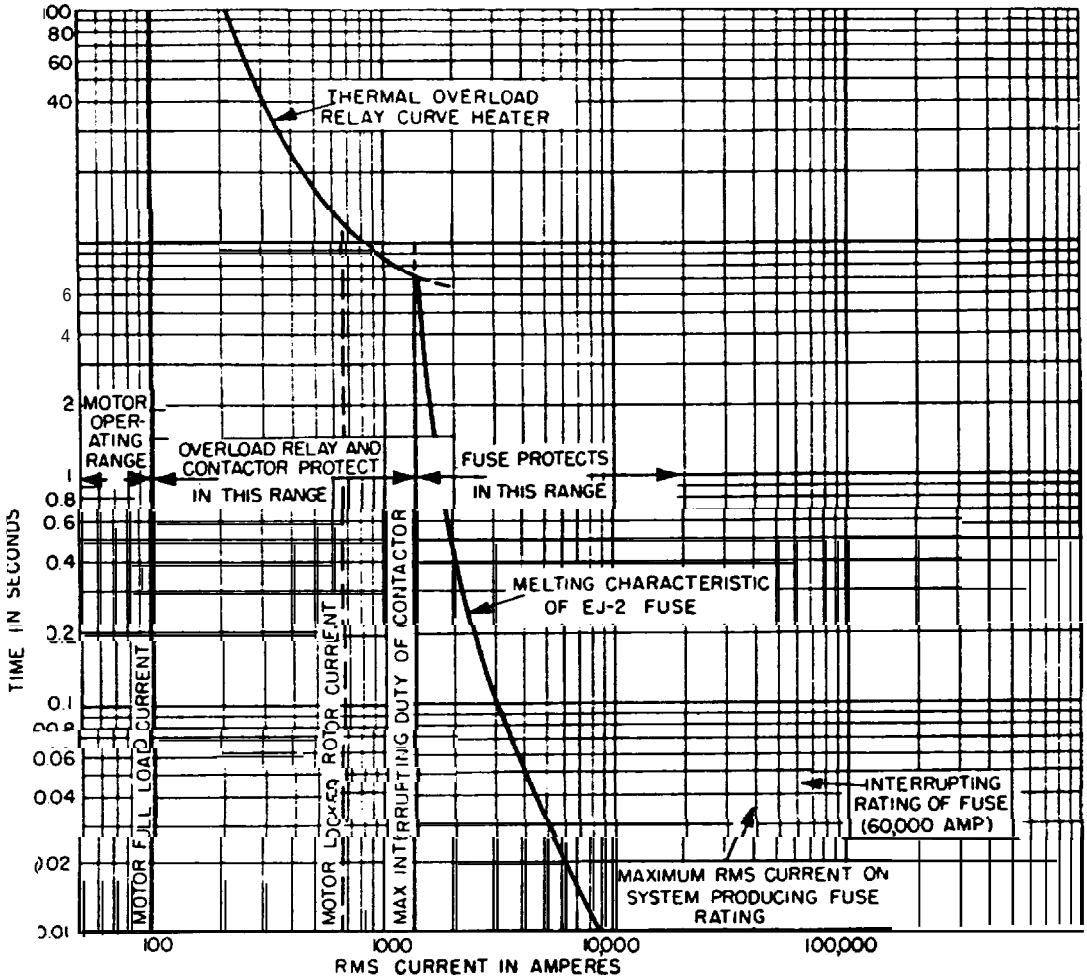

Figure 5-4. Coordination of motor overload relay and current limiting fuse.

rents. At military installations, they typically range in size from 5 to 200HP, and the voltage may vary from about 208V tQ 2300V. The autotransformer starter provides greater starting torque per ampere of starting current drawn from the line than any other reduced voltage motor starter. Two contractors are usually used for connection of an autotransformer starter. See figure 5-5. When the start push button is pressed, start contactor "S" closes. This contactor serves to connect the autotransformer to the line, and the motor to taps on the autotransformer. After a defined timely delay governed by pneumatic timer TR, contactor "S" drops out, and run contactor "R" closes, connecting the motor directly across the line. At this time, the autotransformer is disconnected from both the line and the motor. It is important that contactor "S" is dropped out before contactor "R" closes since any overlapping of "R" and "S" in the closed position will result in a short circuited autotransformer secondary. This would cause high current to flow and subject that winding to high thermal and magnetic stresses. Standard autotransformers are equipped with taps which allow them to be adjusted to operate at different percents of line voltage. Small sizes are normally equipped with taps for 65 and 80 percent of line voltage, while larger sizes normally have 50, 65, and 80 percent taps.

(2) *Resistance starters.* This starter limits the starting current by employing resistors in series with the motor windings. This provides a smooth start and precise acceleration through a closed transition to full voltage and avoids a sudden mechanical shock to the driven load. Power and control circuits of a resistance motor starter are given in figure 5-6. When the start button is pressed, start contactor "S" connects the motor to the line with the starting resistor in series and a pneumatic timer is also picked up. After a time delay governed by timer TR, the TR/TC contacts close, Run contactor "R" closes, short-circuits the starting resistor, and connects the motor across the line.

(3) *part-winding starters.* These are used with squirrel cage motors having two separate, parallel stator windings (fig 5-7). The motor is started on one winding through accelerating contactor "lM" at

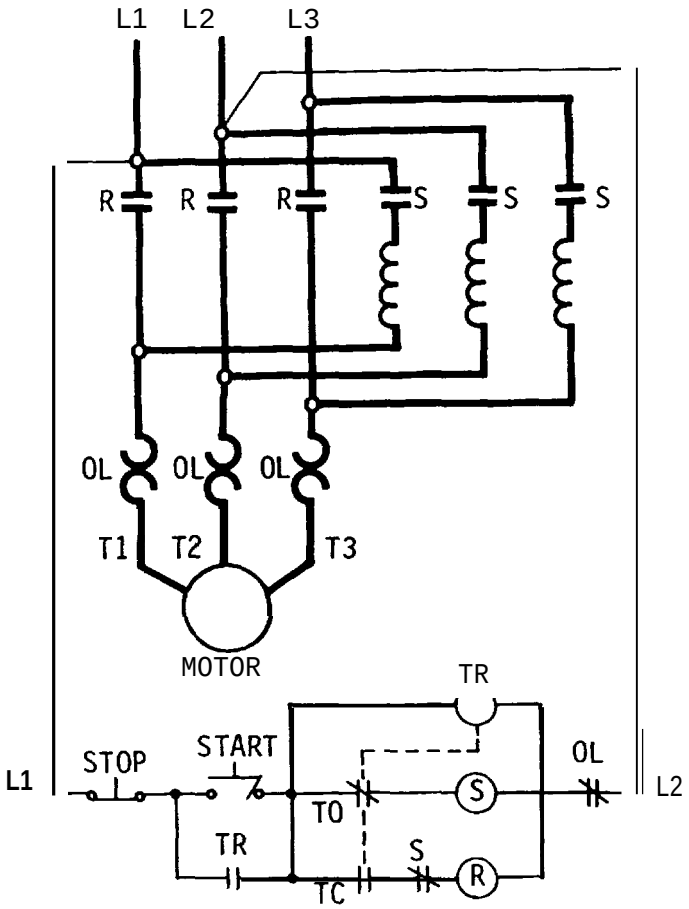

NOMENCLATURE

s	Start Contactor
R	Run Contactor
TR	Pneumatic Timer
OL	Overload Relay
TR/TO	Contact Stays-Closed When TR Picks Up; It Opens After A Time Delay.
TR/TC	Contact Stays Open When TR Picks Up; It Closes After A Time Delay.

Figure 5-5 Autotransformer starter.

about 2/3 of normal inrush current. After a period of acceleration governed by pneumatic timer TR, the other winding is energized through run contactor '2M". This operation permits the use of contactors which are half as large as those required for the reduced-voltage starters, resulting in approximately a 50 percent reduction in cost. However, the motor cannot carry its load until both windings are energized.

(4) *Wye-delta starters.* A variation on the part-winding starter is the wye-delta type, which starts the motor with the windings connected wye, and after a period of acceleration, reconnects the windings for normal delta operation. This type is limited to-wye-delta comectable motors but produces better starting torque at a lower inrush current and is used extensively with air-conditioning motors having a high inertia load and a long acceleration time.

(5) *Solid-state starters.* Solid-state starters (fig 5-8) provide smooth, stepless acceleration of squirrel cage motors from standstill to fill speed. It provides extended starting times by supplying continuously varying voltage to the AC motor from zero to full voltage. Controlled starting of a standard squirrel cage motor is accomplished by supplying reduced voltage to the motor terminals. This reduced

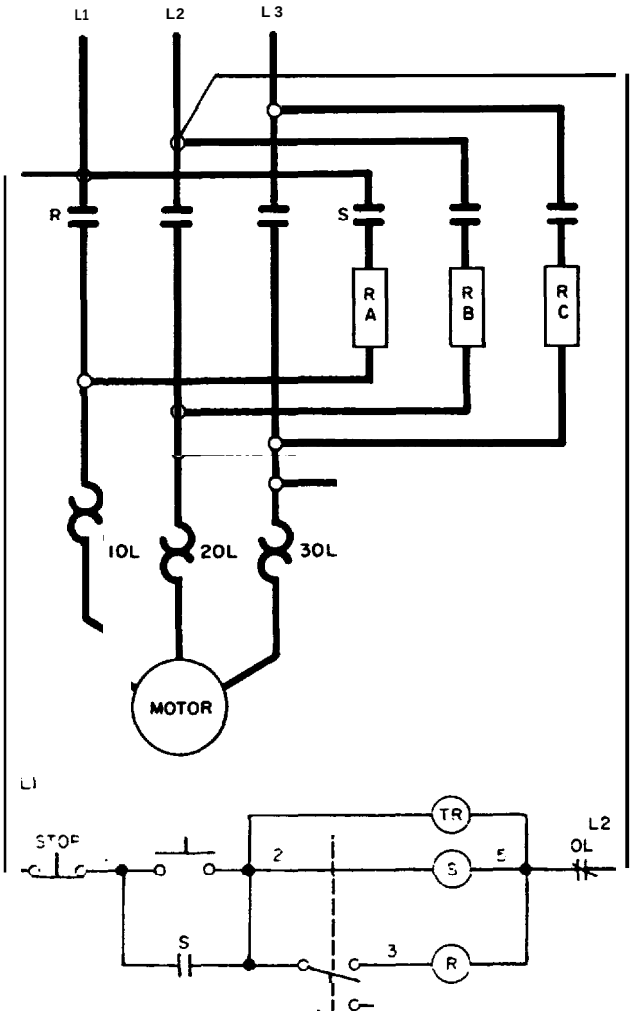

NOMENCLATURE

S START CONTACTOR
R RUN CONTACTOR
RA,RB,RC RESISTORS
TR PNEUMATIC TIMER
OL OVERLOAD RELAY

Figure 5-6. Resistance starter.

voltage produces reduced torque which means a slow, controlled acceleration. Typical applications that require lower controlled starting torques are large pumps, compressors, and heavy material handling conveyors.

e. Two-speed starters. This circuit allows a motor to be started at low speed before running it at high speed. Resistors might be utilized to provide a reduced-voltage start or a separate, lower line voltage may be available for low speed operation.

f. Starters and speed regulators for AC wound rotor and DC motors. This equipment is much more complex than the starting devices previously discussed. Specialized guidance is required to install and maintain this equipment. Consequently, the manufacturer's diagrams and instructions should be obtained and kept readily available.

g. Adjustable speed/frequency starters. AC adjustable speed operation is obtained by converting the fixed frequency AC line power into an adjustable voltage and frequency output which operates the AC motor at the desired speed. The input AC power is converted to adjustable DC voltage by a solid-state converter module. The DC power is then converted by the inverter to produce AC output power at an adjustable frequency and voltage suitable for operating either conventional AC induction motors or synchronous motors. Since the speed of an AC motor is a function of the applied frequency, accurate speed control is readily provided. These systems are complex and may induce harmonics on the electrical system which may, in turn, disrupt the operation of nearby equipment. Maintenance should be performed by personnel experienced with solid-state drives and controls.

h. Miscellaneous types. Other terms used to describe motor controls include the following:

(1) Reversing starter. A motor that can be operated in either a clockwise or counterclockwise direction.

(2) Motor control center is the term given to a grouping of motor starters within a large enclosure (fig 5-9). The centers are used where several motors are to be operated from a single location. The starters themselves may be magnetic across-the-line starters or other types. A typical use would be in a boiler control room where the various fan, pump, conveyer, and other motors serving the boiler are all controlled from a central location.

5-3. Components and maintenance of motor controls.

Control equipment should be inspected and serviced simultaneously with the motors. As a general rule, overhaul procedures for control equipment are less involved than motor overhauling. Most repairs can be made on-site. Motor starters represent one area in which simplicity of construction and wiring has been emphasized by the manufacturers. Improvements have resulted in starters that are simple to install, maintain and operate. Connections are readily accessible, some parts are of plug-in type and may be easily replaced. Coils are often encapsulated in epoxy compounds and are less likely to burn out. Practically all newer starters have provisions for adding several auxiliary contacts with very little effort. Spare parts for starters are usually available from local suppliers. Spare starters, as

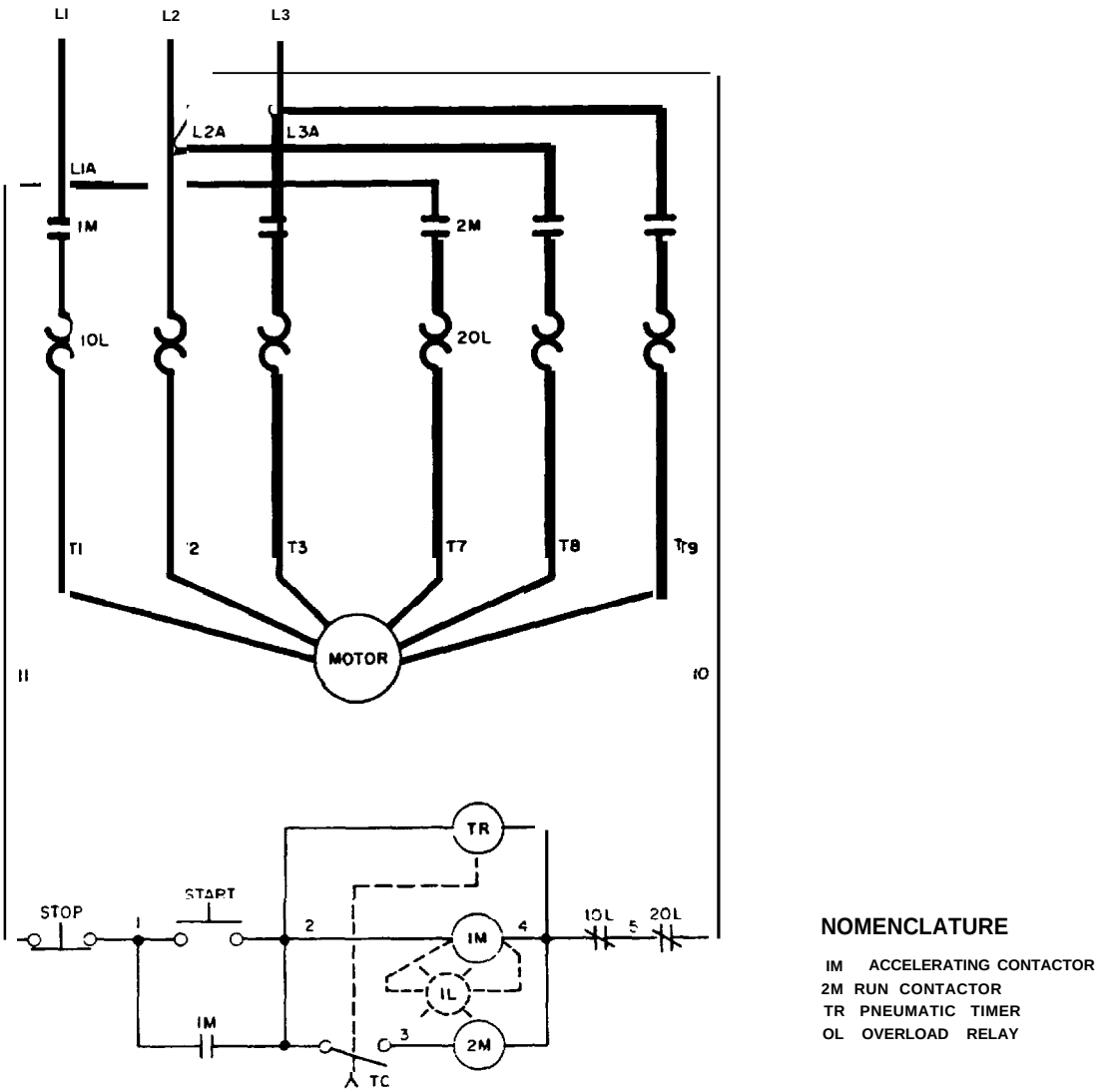

Figure 5–7. Part-winding starter.

well as spare parts, for the most used types and sizes should be stocked in the regular shop supply channels.

a. Enclosures. Enclosures do not normally require maintenance when employed in a clean, dry and noncorrosive atmosphere. But in a marginal atmosphere, enclosures should be inspected and maintained as recommended in paragraph 2-2. The frequency of these inspections should be dictated by the corrosiveness of the atmosphere.

b. Electrical connections. Experience indicates that failures of electrical connections are the cause of many equipment burnouts and fires. Refer to paragraph 2–3 for recommended maintenance.

c. Molded case breakers. A wide variety of circuit breakers are used in the military services. Thermal-magnetic molded case circuit breakers (fig 5-10) are predominant in building panel boards and motor control centers. They are available in bolt-in or plug-in types and in single-pole for two-wire grounded circuits or multiple-pole for two and three-wire ungrounded or three and four-wire grounded circuits. Multiple units should be of the common trip type having a single operating handle. The need for maintenance on molded case breakers will vary depending on operating conditions. Molded case breakers are relatively trouble-free devices requiring little maintenance. For the most part, maintenance will require only that conductor terminations are tight and free from corrosion, and that the breaker is kept dry and free from excessive accumulations of dirt and dust. Because most breakers employ welded internal construction, they require no internal servicing. An exception to this is the trip unit, which is replaceable on breakers in larger frame sizes. Periodic inspection should be made to ensure that the trip unit hold-down bolts are tight. For breakers rated 100 amps and below, and where inspection indicates some type of repair is in order, "repair by replacement" is advisable.

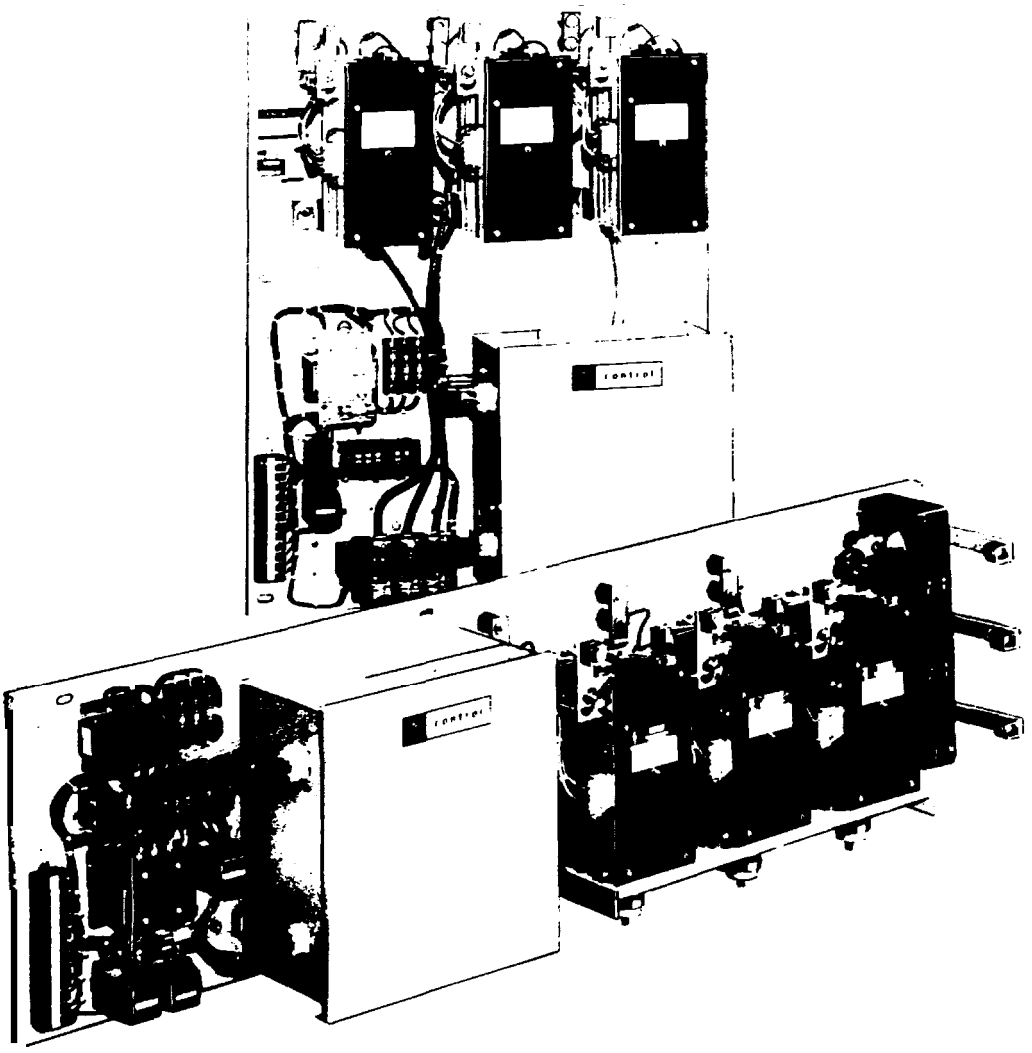

Figure 5-8. Solid-state starter

Small breakers are fairly low in cost, and labor costs do not justify repair. For larger sizes, replacement parts will include such items as handles, arc chutes, and trip units. Trip units are sealed to prevent tampering. Where a trip unit itself is found to be faulty, it should be replaced as a unit, rather than repaired. Some users maintain a regular program of calibration checks (verification testing) to verify the trip point. These tests can be performed on the plant premises. In conducting such tests, care should be taken to follow the manufacturer's specific instructions. Where conditions are not closely controlled, misleading results can be obtained. Test limits provided by the manufacturer must be observed. But, generally, it is advisable to operate and inspect the circuit breaker when maintenance of other components of the motor controls or panel board is being performed. Recommended procedures are routine testing and verification testing. These two types of testing are optional and are implemented at selected locations depending upon the operating environment or critical load being served.

(1) *Routine field testing.* The following constitutes a guide for the types of tests which might be performed during routine maintenance of molded-case breakers. The tests recommended are based on proven standard maintenance practices and are aimed at assuring that the breaker is functionally operable. All tests are to be made only on breakers and equipment that are de-energized. Extreme atmospheres and conditions may reduce the dielectric strength of any insulating material including those of which molded case breakers are made. Therefore, the first routine check recommended is an insulation resistance test (para 14-2). The voltage recommended for this test should be at least 50 percent greater than the breaker rating. However, a minimum of 500 volts is permissible. Tests should be made between phases of opposite poles as well as from current-carrying parts of the circuit breaker to ground. Also, a test should be made between the

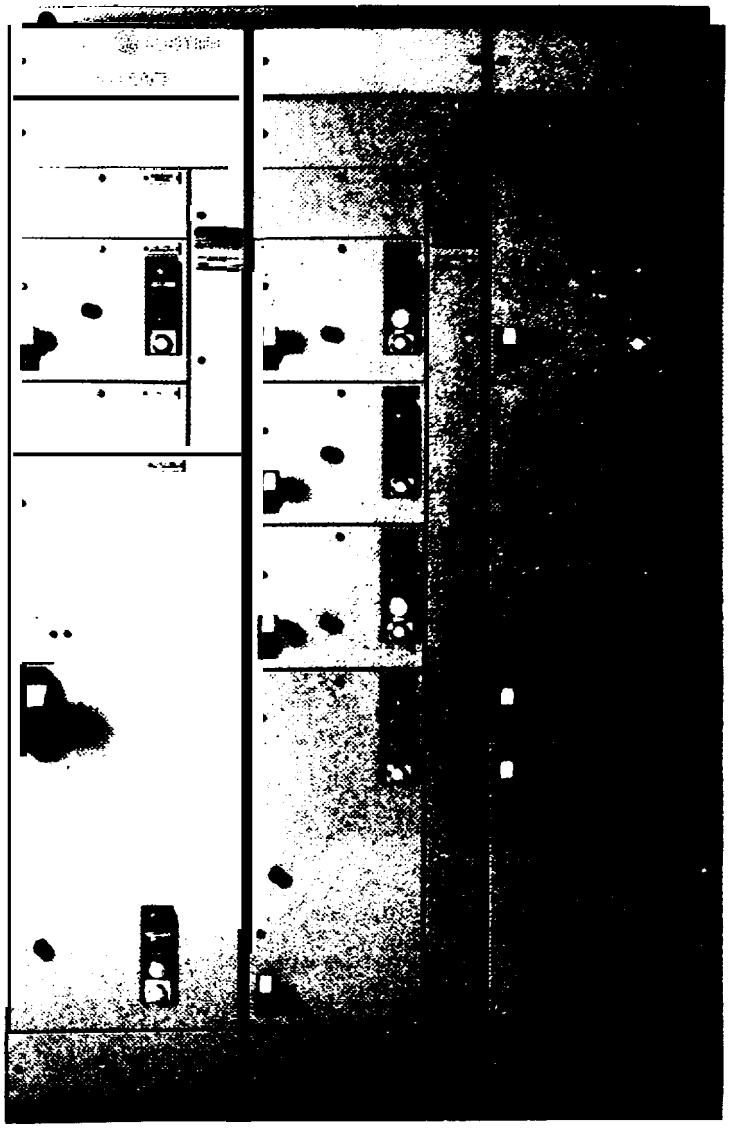

Figure 5-9. Typical motor control center.

line and load terminals with the breaker in the open position. Resistance values below one megohm per kV of test voltage are considered unsafe and should be investigated for possible contamination on the surfaces of the molded case of the circuit breaker. Clean the molded case surface and retest. If low megohm readings persist, then replace the breaker. For individual breaker resistance readings, load and line conductors should be disconnected from the breaker under test. If not disconnected, the test measurements will also show resistance of the attached circuit. During routine testing, all circuit breakers should be operated (while documenting) several times to ensure that the contacts are not frozen and that the mechanical components function without undue friction. This action will also lessen the effect of any film that might have built up on the contacts. Check for cracked, warped or broken case and replace if necessary. If there is evidence of internal heating, or reason to suspect high contact resistance or improper calibration, the breakers should be replaced. It is recommended that molded-case breakers with removable covers be checked for contact and latch cleanliness as well as connection tightness. Lubrication should be checked. If the operating mechanism appears dry, apply a drop of heavy oil or light grease at the wear points. Do not apply lubricant to the contacts or to the trip unit. If the contacts are badly pitted, they should be cleaned with a fine file or sandpaper. Be sure to avoid any accumulation of filings in the breaker. Do not tamper with factory sealed breakers.

(2) *Verification field testing.* Verification field testing of molded case circuit breakers is intended to check breaker operation versus manufacturer's published data. If molded case circuit breaker performance characteristics are to be tested in the

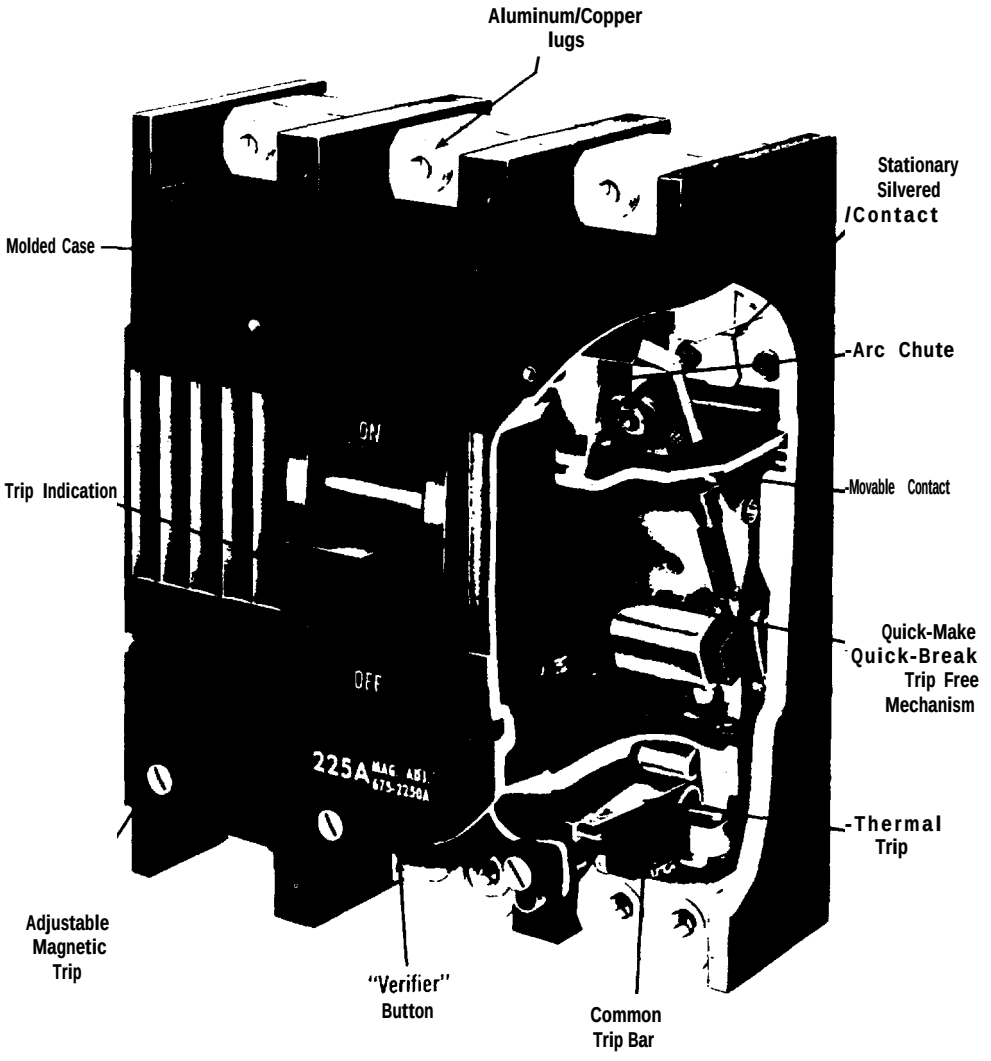

Figure 5–10. Cutaway view of typical molded case circuit breaker.

field, there are many variables that must be recognized and taken into account. Underwriters Laboratories, Inc. (UL) "Standard for Branch Circuit and Service Circuit Breakers" (#489) is the basis for performance standards for all molded case circuit breakers bearing the UL label. Anyone testing molded case circuit breaker performance characteristics should study these standards and be familiar with the conditions specified for the qualifying tests. The principal purpose of field testing is not to determine if the breakers exactly meet the manufacturer's published curves but rather to determine if the device is furnishing the protection for which it was installed; namely, the protection of that part of the electrical system to which it is applied. For instance, a circuit breaker that trips in less than the minimum time shown by the manufacturer's trip time curve may furnish more protection than expected. When field testing circuit breakers, it is recommended that the overcurrent trip test be performed at 300 percent of rated current. The reaction of the circuit breaker to this overload is indicative of its reaction throughout its entire overcurrent trip range. The 300 percent load is chosen as the test point because it is relatively easy to generate the required current in the field. Also, the wattage per pole from line to load is small enough so the dissipation of heat in the non-active pole spaces is minor and does not appreciably affect the testing results. Various test equipment and test procedures are available for molded-case circuit breaker testing (refer to the circuit breaker manufacturer for recommended testing equipment and procedures). Test equipment generate high currents at low voltages and are safe and convenient to use for field testing. For specific minimum and maximum tripping times given 300 percent current flow, refer to the manufacturer's document for the breaker being tested (fig 5–11). If the breaker does not trip within the specified bandwidth, then the breaker should be replaced. The instantaneous magnetic trip characteristics of the breaker can be influenced by stray

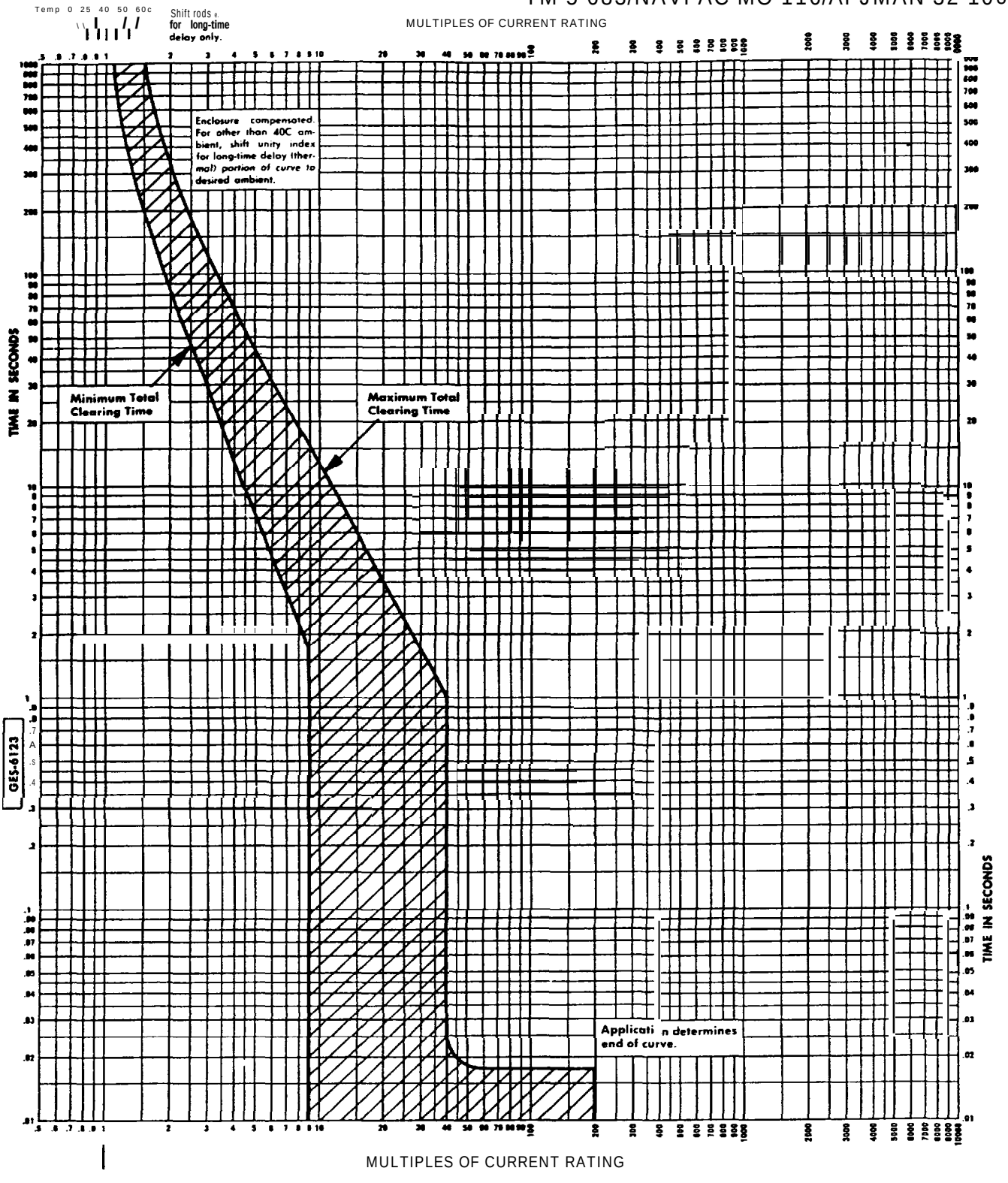

GENERAL ELECTRIC

Current Ratings
50, 60, 70 and 80 Amperes

Voltage Ratings
240 Volts A-c

Frequency Rating
60 Hertz

MOLDED-CASE CIRCUIT BREAKER

E 100 LINE

Type TEB, 50-80 Amperes

Long-time Delay and Instantaneous

Time-current Curves

(Curves show enclosure-compensated circuit breaker in open air, 40C ambient, wired with conductors of corresponding rating, no prior load. For all other ambients, use shift index at top of sheet.)

GES-6123

Adjustments

Long-time delay thermal trip: not adjustable.

Instantaneous magnetic trip: not adjustable.

Figure 5-11. Molded case circuit breaker time-current curve.

magnetic fields. The test setup must be conducted in such a way that magnetic fields created by the test equipment, steel enclosures, or the conductors from the test equipment to the circuit breaker do not affect the test results.

d. Fuses. Fuses are among the oldest types of overcurrent protectors. They are simple, rugged and inexpensive. They sense overcurrent conditions through the development of heat in the conducting elements and accomplish their operation by destruction of these elements. They offer both long-time and short-time short circuit protection and are used widely in the protection of small motors. Maintenance of fuses should not be performed until all power sources are disconnected (fig 5-12). At that time, check the continuity of all fuses with an ohmmeter. A reading greater than zero ohms indicates that the fuse is blown and must be replaced. Inspect fuse terminals and fuse holder clips. Check that the portions of the fuse making contact in the clip are clean and bright; poor contact can cause overheating which results in a discoloration of the contact surfaces. If this occurs, then the oxidized surfaces should be cleaned and polished. Silver-plated surfaces should not be cleaned with an abrasive material. Wiping contacts with a noncorrosive cleaning agent is recommended. Tighten all fuse holder connections. Fuse clips should exert sufficient pressure to maintain good contact, which is essential for proper fuse performance. Clips which make poor contact should be replaced. Clip clamps are recommended when unsatisfactory clips cannot be replaced. Replace fuses showing signs of deterioration such as discolored or damaged casings or pitted contact surfaces. There are many types of fuses (fig 5-13) with various characteristics, some of which are physically interchangeable. Make certain that fuses are of the proper type and rating. Never replace one type of fuse arbitrarily with another type fuse of the same physical size simply because it fits the fuse holder. A continuity check should also be performed on replacement fuses to ensure their integrity. Fuses should have correct current and voltage ratings, proper time-delay or current-limiting characteristics and an adequate interrupting rating to protect the circuit and its components Current ratings of fuses protecting transformers or motors should be selected at or near the fill load current. Voltage ratings of fuses should equal or exceed their circuit voltage. Interrupting ratings of fuses should equal or exceed the available fault current at the fuse holder. UL listed fuses without marked interrupting ratings are satisfactory only on circuits where fault currents do not exceed 10,000 amperes. Non-current-limiting fuses should not be used to replace current-limiting fuses since fuse holders for UL listed current-limiting fuses are designed to reject fuses which are not current limiting. Fuse holders and rejection clips should never be altered or forced to accept fuses which do not readily fit. An adequate supply of spare fuses, especially those which are uncommon, will minimize improper replacement.

PREVENTIVE MAINTENANCE

- IS FUSE TIGHT IN CIRCUIT?
- ARE FUSE AND HOLDERS CLEAN AND DRY?
- OVERHEATING?
- ARE RIGHT TYPE AND SIZE IN CIRCUIT?
- **ARE SPARES HANDY?**

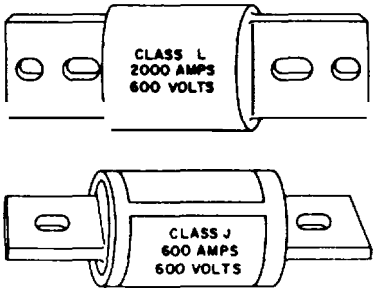

CORRECTIVE MAINTENANCE

- TEST FOR CONTINUITY, SINGLE PHASING
- WHAT OPENED FUSE?
  - -- SHORT?

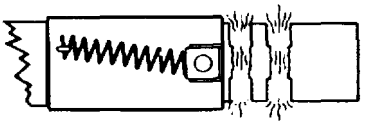

  - -- OVERLOAD?

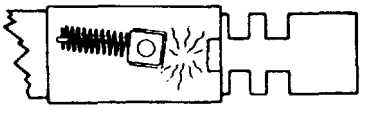

  - -- HIGH TEMPERATURE DERATING?
- REPLACE WITH RIGHT TYPE AND SIZE.

Figure 5-12. Fuse maintenance practices.

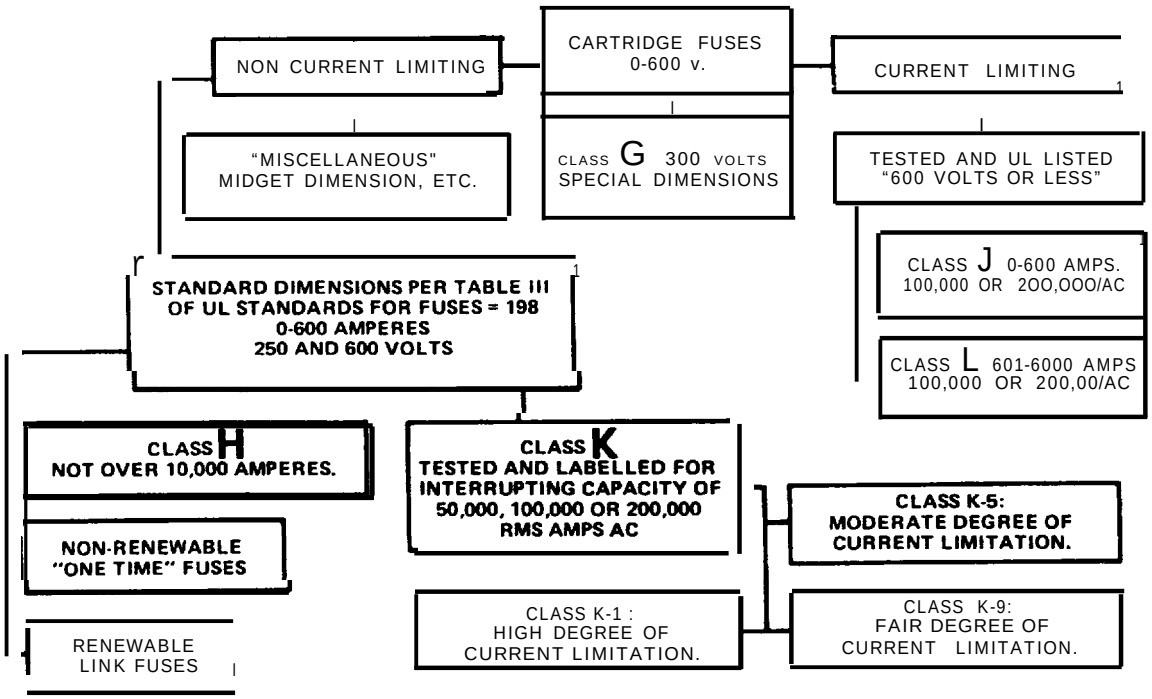

Figure 5-13. Underwriters' Laboratories cartridge fuse classification.

e. Thermal overloads. Thermal overload relays contained in starters provide more precise motor protection against overloads and momentary surges than fuses or circuit breakers. However, they do not provide short circuit protection. Relays themselves require little maintenance other than occasional testing to ensure that they are operational. Thermal overloads should be checked and resized whenever the motor is replaced to adequately protect the motor. The relays are controlled by heater elements (fig 5-14) which are in series with the motor current. The size of the heater must match the motor being protected. Be especially careful if the motor has been oversized to compensate for lower load current with lower rated heaters to cause tripping on loss of one phase (single phasing). It often happens that the wrong size heaters are installed. If the heater is too small, the overload relays act to take the motor off line unnecessarily. If too large, the motor will operate without proper protection and could be damaged from overload. If the relays frequently operate to take the motor off line, the heaters should be checked first. If the heaters are properly sized (about 120 percent of motor full load current) and there are no unusual temperature conditions, then check the motor current. If the motor current is higher than the nameplate rating by a margin sufficient to exceed the heater rating, then the relay is operating properly, and the motor is either overloaded or in fault, therefore, check the motor. Do not put in larger heaters. If however, the motor stops frequently even though the heaters are correctly sized and the line current and ambient temperature are normal, then check the relays. The relays should be tested and replaced if required. Unfortunately, the overload relays that serve as safety valves to protect the motors from burnouts due to faults and overloads, sometimes fail to respond properly. For example, aging and inactivity followed by metal fatigue in some relay types may result in a failure to operate under conditions of overload. Periodic testing of the relays under load conditions, checking the tightness of all overload connections and inspecting for contact overheating and cleanliness forms an important part of a good motor control maintenance program. Suitable test instruments are available that provide a dummy load to the relay and measure the time interval required to open the contacts. Their use is highly recommended, especially on relays for motors that serve critical loads; e.g., motors driving air conditioners which are used for communication or data processing equipment, or motors on production lines. For most applications, testing of motor overload relays should be conducted every 2 years. Regular testing of thermal overload motor relays is a recommended procedure for all installations. Overload relays employ a thermal element designed to interpret an overheating condition in the motor winding by converting the current in the motor leads to heat in the overload relay element. As the heat in the element approaches a predetemnined value, the control circuit to the magnetic contactor holding coil is interrupted and the motor branch circuit is opened. The

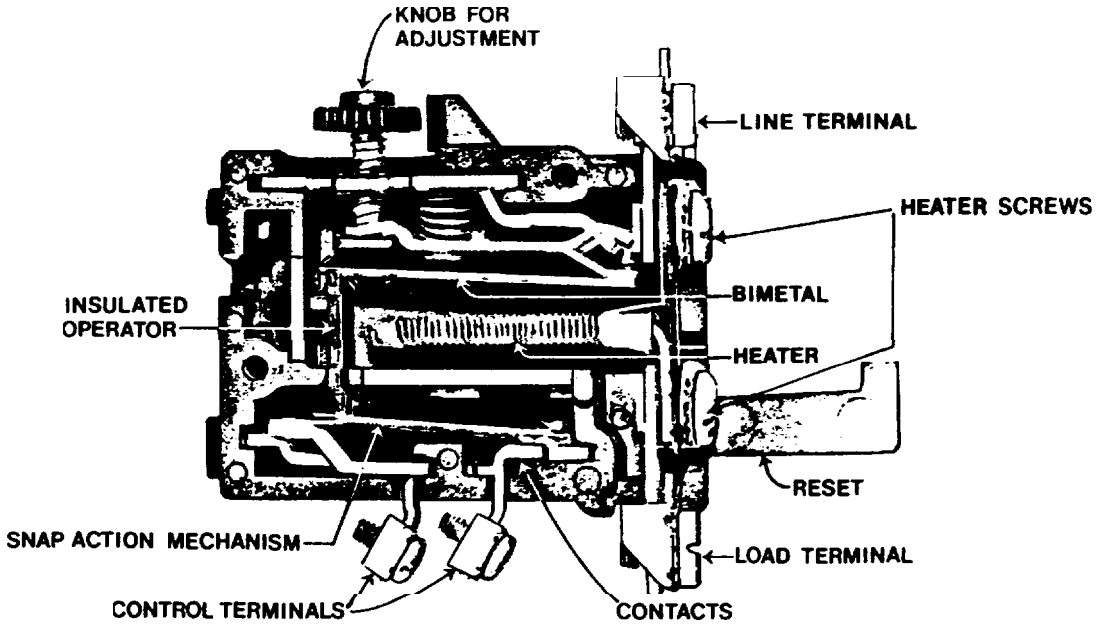

Figure 5-14. Typical terminal overload.

controller and motor should be located in the same ambient temperature environment so that the overload relay can act accurately. If the controller is located in a lower ambient temperature environment than the motor, it may not trip in time to protect the motor. Vice versa, if the controller is in a higher ambient temperature than the motor, it will trip even if the motor is not in overload. The significant different ambient temperatures of the motor and controller can be compensated by selection of a relay heater or use of a relay that compensates for temperature. The adjustments are to decrease the motor current protection (lower trip setting) by one percent for each degree Celsius the motor ambient exceeds the controller normal ambient temperature or increase the motor current protection (raise trip setting) by one percent for each degree Celsius the controller ambient exceeds the motor ambient. The manufacturer's published heater selection tables should be referenced (fig 5-15). It should be noted that in this case, according to the National Electrical Code, a disconnecting means must be located in sight from the controller location.

f. Contractors. The part of the starter that contains the coil and contacts is known as the contactor (fig 5-16). It *is* used to control the circuits to the motor. Contractors are intended for repetitive operation, perhaps as many as a million or more operations. Normal wear and tear can be expected, and therefore periodic inspections should be made to ensure that all moving parts are functioning. properly.

(1) *Copper contacts.* Copper contacts should be replaced when worn thin or badly burned and pitted. Both the moving and the stationary contacts should be replaced to avoid possible misalignment of an old contact with a new one. Check the contact spring pressure with a scale in accordance with the manufacturer's recommendations. Adjust or replace the springs as necessary to maintain good pressure between pairs of contacts. When copper contacts become excessively rough, they should be smoothed with a burnishing tool or a fine file designed for this purpose. Do not use emery cloth. Also, any copper oxide on the contact surfaces should be removed. Copper oxide is not sufficiently conductive, it acts as a high resistance and could eventually cause overheating. When filing, particular care should be taken to maintain the original shape of the contacts. It is not necessary to develop smooth contact surfaces. In fact, better operation is obtained when the surfaces are rough dressed. Contacts should not be lubricated.

(2) *Silver contacts.* Silver contacts should not be filed. Silver oxide, that forms on the contact surfaces, does not have to be removed because it is a good conductor. Routine inspection should always include checks for tightness of terminal and cable connections as well as for signs of overheating. Replacements should be made as conditions dictate. Manufacturer's recommendations should be followed closely for maintenance and replacement of parts.

(3) *Shunts.* Shunts are flexible bands of woven copper strands carrying current from the moving contacts to a stationary stud. If the shunt is unduly bent or strands are broken, then it should be replaced.

(4) *Coils.* Coils require very little maintenance. In fact it is generally more economical to replace the

FOR CR124 C

Max Motor Full-load Amperes	Heater Cat. No. CR123	Max Fuse Rating
.33	C0.36A	3
.37	C0.39A	3
.41	C0.43A	3
.46	C0.48A	3
.52	C0.54A	3
.57	C0.60A	3
.61	C0.66A	3
.67	C0.71A	3
.75	C0.78A	3
.84	C0.87A	3
.94	C0.97A	3
1.03	C1.09A	3
1.14	C1.18A	3
1.30	C1.31A	3
1.42	C1.48A	3
1.61	C1.63A	6
1.72	C1.84A	6
1.93	C1.96A	6
2.10	C2.20A	6
2.34	C2.39A	6
2.64	C2.68A	10
2.86	C3.01A	10
3.13	C3.26A	10
3.32	C3.56A	10
3.68	C3.79A	10
4.08	C4.19A	15
4.61	C4.66A	15
5.21	C5.26A	20
5.62	C5.92A	20
6.12	C6.30A	20
6.83	C6.95A	25
7.70	C7.78A	25
8.48	C8.67A	30
9.19	C9.55A	30
9.92	C10.4B	30
11.1	C11.3B	35
12.2	C12.5B	40
13.5	C13.7B	45
14.6	C15.1B	45
16.1	C16.3B	50
17.9	C18.0B	60
19.3	C19.8B	60
20.6	C21.4B	70
22.6	C22.8B	70
24.8	C25.0B	80
27.6	C27.3B	90
30.0	C30.3B	90

FOR CR124 D

Max Motor Full-load Amperes	Heater Cat. No. CR123	Max Fuse Rating
6.63	C6.95A	20
7.59	C7.78A	20
8.39	C8.67A	25
9.20	C9.55A	30
9.93	C10.4B	30
11.2	C11.3B	35
12.5	C12.5B	40
14.1	C13.7B	40
15.5	C15.1 B	50
17.4	C16.3B	50
19.8	C18.0B	60
21.2	C19.8B	70
22.7	C21.4B	70
24.9	C22.8B	80
27.3	C25.0B	80
29.7	C27.3B	90
34.2	C30.3B	100
40.2	C33.0B	110
46.3	C36.6B	125
50.0	C40.0B	150

Figure 5-15. Typical heater selection table for thermal overload device.

coil than it is to attempt repairs. Coils will operate efficiently at 85 to 110 percent of rated voltage. Higher voltages shorten life and lower voltages may result in failure to close the contacts completely. This could result in welded contacts. Coil burnout also could occur if the contactor fails to close properly either from being blocked or by low voltage. In either case, the current flowing through the coil is larger than rated because of the larger air gap in the magnetic circuit. Maintenance consists of cleaning out accumulated dust and grease, if any, and inspecting the coil to see that it is of proper rating and operates properly. When handling coils, do not pick the coil up by its leads. If coils become wet, they should be dried out by spraying a contact cleaning chemical on the coil or by heating the coil in an oven at 110 degrees C to 125 degrees C. If it is necessary to varnish coils, use only an approved insulating treatment applied while the coils are still warm from baking. These instructions on drying and varnishing coils do not apply to the newer encapsulated types.

5-4. Preventive maintenance and troubleshooting guide.

Table 5-1 outlines typical preventive maintenance for a motor control. Table 5-2 lists troubleshooting and corrective maintenance practices.

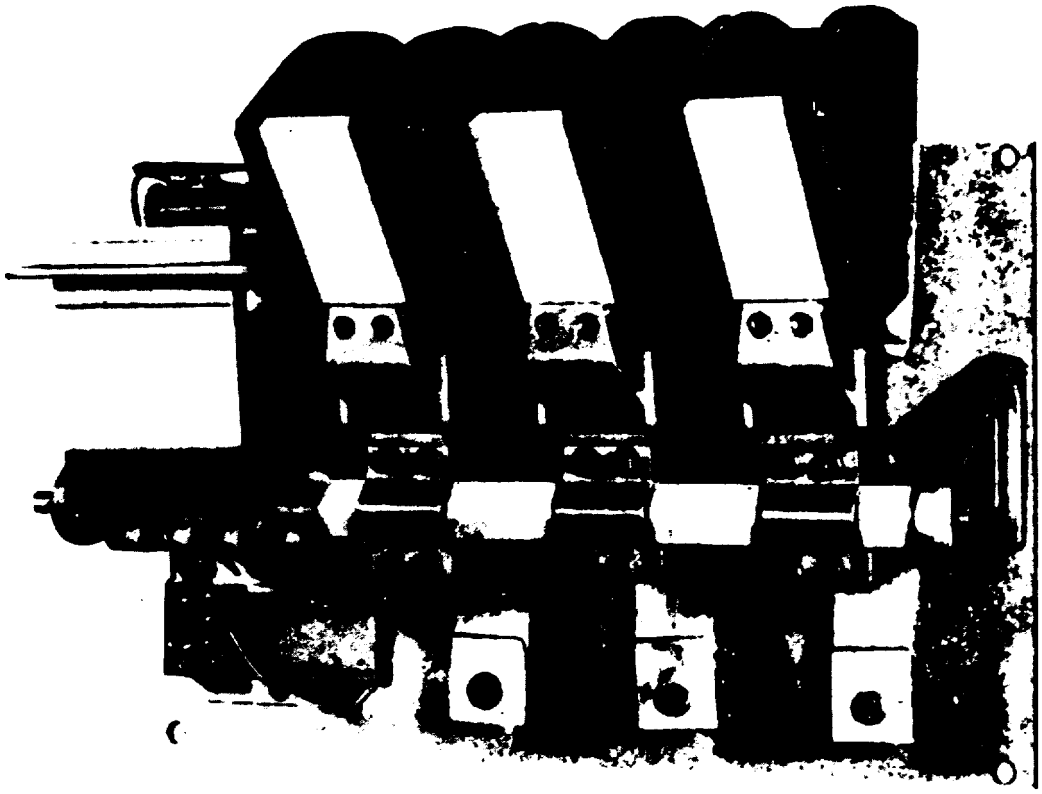

Figure 5-16. A NEMA size 6 magnetic contactor (Courtesy of Siemens-Allis).

Table 5-1. Motor control preventive maintenance guide.

WHAT TO INSPECT	WHAT TO INSPECT FOR
1. Exterior and Surroundings	Dust, grease, oil; high temperature; rust and corrosion; mechanical damage; condition of gaskets, if any.
2. Interior of Enclosure, Nuts and Bolts	Same as for No. 1 plus excess vibration which may have loosened nuts, bolts or other mechanical connections.
3. Contactors, Relays, Solenoids	
a. General	Check control circuit voltage; inspect for excess heating of parts evidenced by discoloration of metal, charred insulation or odor; freedom of moving parts; dust, grease, and corrosion; loose connections.
b. Contact Tips	Check for excessive pitting, roughness, copper oxide; do not file silver contacts.
c. Springs	Check contact pressure; is pressure same on all tips.
d. Flexible leads	Look for frayed or broken strands; be sure lead is flexible - not brittle.
e. Arc Chutes	Check for breaks or burning.
f. Bearings	Check for freedom of movement; do not oil.
g. Coils	Look for overheating, charred insulation or mechanical injury.
h. Magnets	Clean faces; check shading coil; inspect for misalignment, bonding.

Table 5-1. Motor control preventive maintenance guide continued.

WHAT TO INSPECT	WHAT TO INSPECT FOR
4. Fuses and Fuse Clips	Check for proper rating, snug fit; if copper, polish ferrules; check fuse clip pressure.
5. Overload Relays	Check for proper heater size; trip by hand; check heater coil and connection; inspect for dirt, corrosion.
6. Pushbutton Station and Pilot Devices	Check contacts, inspect for grease and corrosion.
7. Dashpot-Type Timers and Overload Relays	Check for freedom of movement; check oil level.
8. Resiators	Check for signs of overheating; loose connections; tighten sliders.
9. Connections	Tighten main line and control conductor connection; look for discoloration of current-carrying parts.
10. Control Operation	Check sequence of operation of control relays; check relay contacts for sparking on operation; check contacts for flash when closing; if so, adjust to eliminate contact bounce; check light switches, pressure switches, temperature switches, etc.

Table 5-2. Motor control troubleshooting chart.

CAUSE	REMEDY
1. Contactor or Relay Does not Close	
No supply voltage.	Check fuses and disconnect switches.
Low voltage.	Check power supplY. Wire may be to small.
Coil open or shorted.	Replace.
Wrong coil.	Check coil number.
Mechanical obstruction.	With power off, check for free movement of contact and armature assembly.
Pushbutton contacts not making.	Clean or replace if badly worn.
Interlock or relay contact not making.	Adjust or replace if badly worn.
Loose connection.	Turn power off first, then check the circuit visually with a flashlight.
Overload relay contact open.	Reset
2. Contactor or Relay Does Not Open	
Pushbutton not connected correctly.	Check connections with wiring diagram.
Shim in magnetic circuit (DC only) worn, allowing residual magnetism to hold armature closed.	Replace.
Interlock or relay contact not opening circuit.	Adjust contact travel.
“Sneak” circuit.	Check control wiring for insulation failure.
Gummy substance on pole faces.	Clean with solvent.
Worn or rusted parts causing burning	Replace parts.
Contacts weld shut.	See Item 3.

Table 5-2. Motor control trouble-shooting chart-continued.

CAUSE	REMEDY
3. Contacts weld shut or freeze	
Insufficient contact spring pressure causing contacts to burn and draw arc on closing.	Adjust, increasing pressure. Replace if necessary.
Very rough contact surface causing current to be carried by too small an area.	Smooth surface or replace if badly worn.
Abnormal inrush of current.	Use larger contactor or check for grounds, shorts or excessive motor load current.
Rapid jogging.	Install larger device rated for jogging service or caution operator.
Low voltage preventing magnet from sealing.	Correct voltage condition. Check momentary voltage dip during starting.
Foreign matter preventing contacts from closing.	Clean contacts with approved solvent.
Short circuit.	Remove short circuit fault and check to be sure fuse or breaker size is correct.
4. Contact Chatter	
Broken pole shader.	Replace.
Poor contact in control circuit.	Improve contact or use holding circuit interlock (3-wire control).
Low voltage.	Correct voltage condition. Check momentary voltage dip during starting.
5. Arc Lingers Across Contacts	
If blowout is series, it may be shorted.	Check wiring diagram to see kind of blowout.
If blowout is shunt, it may be open circuited.	Check wiring diagram through blowout.
Arc box might be left off or not in correct place.	See that arc box is on contactor as it should be.
If no blowout used, note travel of contacts.	Increasing travel of contacts increases rupturing capacity.

Table 5-2. Motor control trouble-shooting chart-continued.

CAUSE	REMEDY
6. Excessive Corrosion of Contacts	
Chattering of contacts as a result of vibration outside the control cabinet.	Check control spring pressure and replace spring if it does not give rated pressure. If this does not help, move control so vibrations are decreased.
High contact resistance because of insufficient contact spring pressure.	Replace contact spring.
7. Abnormally Short Coil Life	
High Voltage.	Check supply voltage and rating of controller.
Gap in magnetic circuit (alternating current only).	Check travel of armature. Adjust SO magnetic circuit is completed.
Ambient temperature too high.	Check rating of contact. Get coil of higher ambient rating from manufacturer, if necessary.
Filing or dressing.	Do not file silver-faced contacts. Rough spots or discoloration will not harm contacts.
Interrupting excessively high currents.	Install larger device or check for grounds, shorts or excessive motor currents. Use silver-faced contacts.
Excessive jogging.	Install larger device rated for jogging or caution operator.
Weak contact pressure.	Adjust or replace contact springs.
Dirt on contact surface.	Clean contact surface.
Short circuits.	Remove short circuit fault and check for proper fuse or breaker size.
Loose connections.	Clean and tighten.
Sustained overload.	Install larger device or check for excessive load current.
8. Panel and Apparatus Burned by Heat From Resistor	
Motor being started frequently	Use resister of hiqher rating.

Table 5-2. Motor control trouble-shooting chart-continued.

CAUSE	REMEDY
9. Coil Overheating	
Overvoltage or high ambient temperature.	Check application and circuit.
Incorrect coil.	Check rating and replace with proper coil if incorrect.
Shorted turns caused by mechanical damage or corrosion.	Replace coil.
Undervoltage, failure of magnet to seal in.	Correct pole faces.
Dirt or rust on pole faces increasing air gap.	Clean pole faces.
10. Overload Relays Tripping	
Sustained overload.	Check for grounds, shorts or excessive motor currents.
Loose connection on load wires.	Clean and tighten.
Incorrect heater.	Relay should be replaced with correct size heater unit.
11. Overload Relay Fails to Trip	
Mechanical binding, dirt, corrosion, etc.	Clean or replace.
Wrong heater or heaters omitted and jumper wires used.	Check ratings. Apply proper heaters.
Motor and relay in different temperatures.	Adjust relay rating accordingly or make temperature the same for both.
12. Noisy Magnet (Humming)	
Broken shading coil.	Replace shading coil.
Magnet faces not mating.	Replace magnet assembly or realign.
Dirt or rust on magnet faces.	Clean and realign.
Low voltage.	Check system voltage and voltage dips during starting.

CHAPTER 6

POWER CABLES

6-1. Components.

Power cables are generally made up of three components: conductor, insulation and protective covering. The single most important component of a cable is its insulation. The best way to ensure continued reliability of a power cable is through visual inspection and electrical testing of its insulation. The guidance provided here applies only to cables rated 600V AC or less and, to the occasional applications found in DC motor drives operating at 500, 600, or 700v DC or less.

6-2. Visual inspection.

A visual inspection of a power cable can be made with power on. However, if the visual inspection is to include touching, handling or moving cables in manholes or at terminations, then all circuits in the group to be inspected should be de-energized before the work is started.

a. Manhole installations. Manholes are not usually located inside buildings. Terminations and splices of non-lead cables should be squeezed in search of soft spots, and inspected for tracking or signs of corona. The ground braid should be inspected for corrosion and tight connections. Inspect the bottom surface of the cable for wear or scraping due to movement at the point of entrance into the manhole and also where it rests on the cable supports. Inspect the manhole for spalling concrete or deterioration above ground. If the manhole is equipped with drains, these may require cleaning or, in some instances, it may be necessary to pump water from the manhole prior to entrance. Do not enter a manhole unless a test for dangerous gas has been made and adequate ventilation gives positive assurance that entry is safe. High voltage cables may be present fireproofed with asbestos containing materials which pose additional health hazards. Potheads should be inspected for oil or compound leaks and cracked or shipped porcelains. The procelain surfaces should be cleaned and if the connections are exposed, their tightness should be checked. Since inspection intervals are normally one year or more, comprehensive records are an important part of the maintenance inspection. They should be arranged so as to facilitate comparison from one year to the next. Cables in manholes, ducts or below grade installations should be inspected for the following:

(1) Sharp bends in the cables.
(2) Physical damage.
(3) Excessive tension.
(4) Cables laying under water.
(5) Cable movement or dangling.
(6) Insulation swelling.
(7) Soft spots.
(8) Cracked protective coverings.
(9) Damaged fireproofing.
(10) Poor ground connections or high impedance to ground.
(11) Deterioration of metallic sheath bond.
(12) Corrosion of cable supports or trays.

b. Raceway and cable tray installations. Since the raceway or cable tray is the primary mechanical support for the cable, it should be inspected for signs of deterioration or mechanical damage. The cable jacket should also be checked for abrasions or mechanical damage.

6-3. Cable insulation testing.

The electrical test most often conducted to determine the quality of low voltage cable insulation is the insulation resistance test (para 14-2). It is performed as a routine maintenance test for cables already in service or as an acceptance test for new cables. DC overpotential testing is another way of testing cable insulation. This test is performed primarily on medium and high voltage cables to test their dielectric strength and is not recommended for routine maintenance testing of low voltage cables. The insulation resistance test for low voltage cables is usually performed using a megohmmeter (para 13-4). It is a simple, quick, convenient and nondestructive test that can indicate the contamination of insulation by moisture, dirt or carbonization. Before testing any cable, the circuit must be de-energized. Once that is done, it is usually best to disconnect the cable at both ends in order to test only the cable, and to avoid error due to leakage across or through switchboards or panelboards. For an acceptance test, cable less than or equal to 300 V maybe tested at 500 V and cable greater than 300 V but less than 600 V maybe tested at 1,000 V. For a routine maintenance test, test voltage should be restricted to 60 percent of the factory test voltage. The test voltage should be applied from phase to ground on each conductor with the shielding tapes and metallic jackets also connected to ground (fig 6-l). While no general standard exists for minimum acceptable insulation resistance values for cables in service, a “rule-of-thumb” of one megohm of resistance (mini-

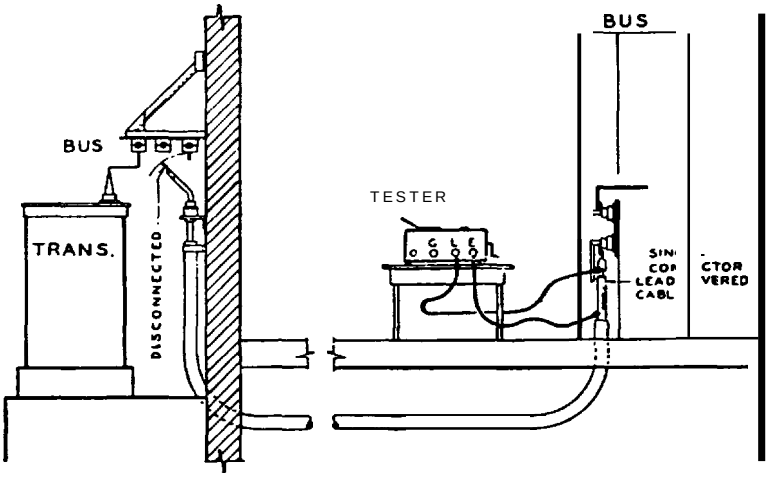

a.

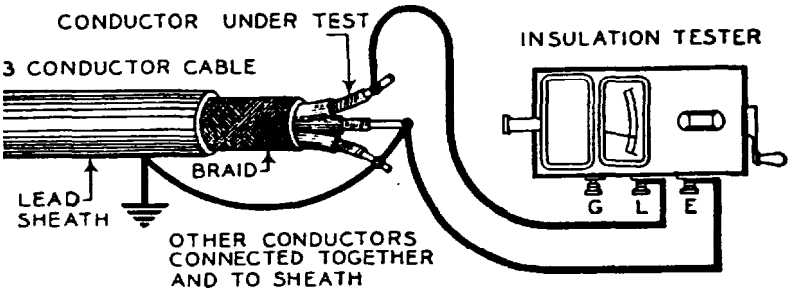

b.

Figure 6-1. Connections for Testing Low Voltage Cable Insulation: a) Test on single-conductor cable, b) Tests on multi-conductor cable.

mum) per 1,000 V of applied test voltage is accepted. If a cable should fail the test, then further cable testing is required to pinpoint the failure location. A cable locator/fault finder can trace the exact path of buried or above ground cable and locate a fault. The insulation resistance test should be performed at regular periods and a record kept of the readings. Insulation resistance decreases with an increase in temperature. Thus, in order to properly interpret the results and to permit a reliable comparison of periodic readings, the readings should be corrected to a base temperature. Correction factors and methods are shown in the reference material of the megohmmeter manufacturer. It should be noted that persistent downward trends in insulation resistance indicate insulation deterioration even though the readings may be higher than minimum acceptable values.

6-4. Overpotential testing.

Both direct current (DC) and alternating current (AC) overpotential testing practices require the use of high voltages. Only properly trained, competent shop personnel should perform such tests. Because of the extra time, manpower and expense needed for overpotential testing, it is not recommended as a routine scheduled maintenance tool. The test is done mainly to seek out weaknesses in the cable

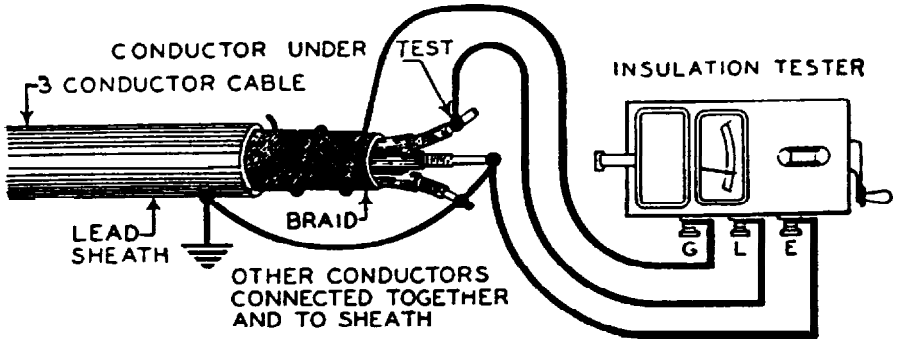

c.

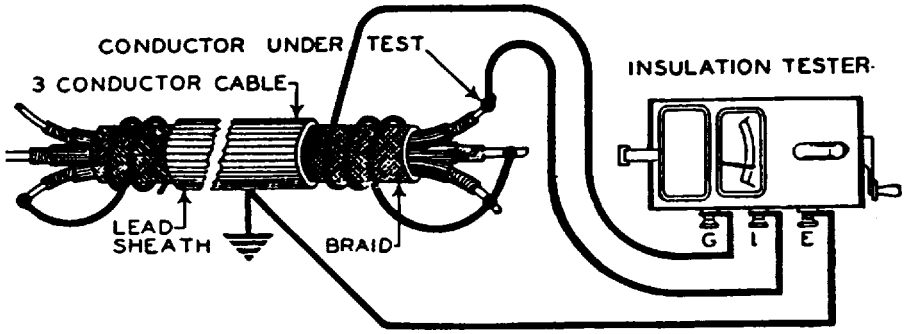

d.

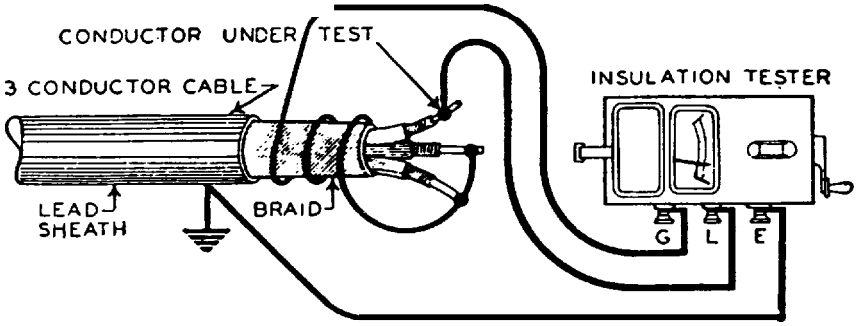

e.

Figure 6-1. (Continued) c) Use of the "guard" terminal to eliminate measure of surface leakage across exposed insulation at one end of cable, d) Use of a "spare" conductor to guard both ends of a multi-conductor cable, e) Use of "guard" to eliminate all surface leakages except conductor under test.

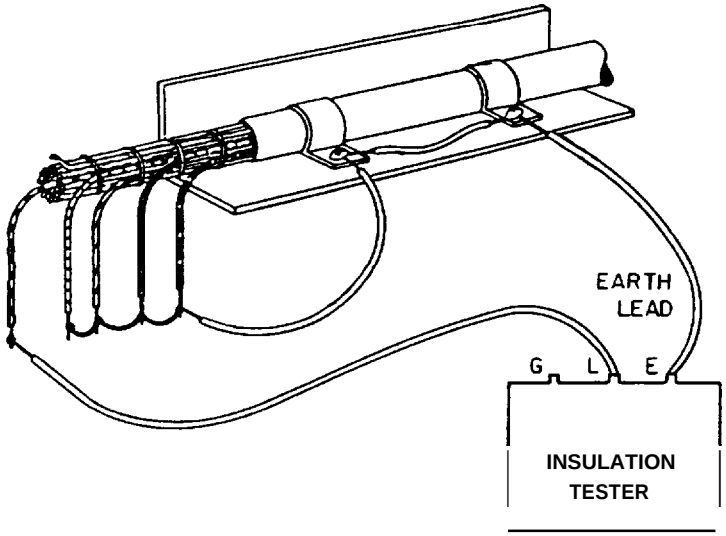

f.

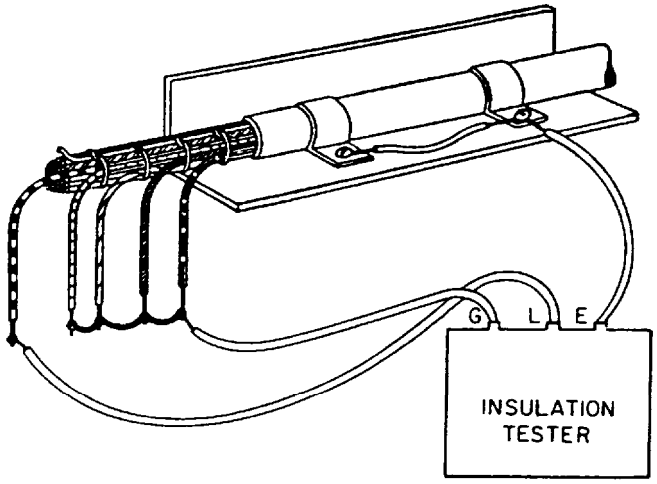

g.

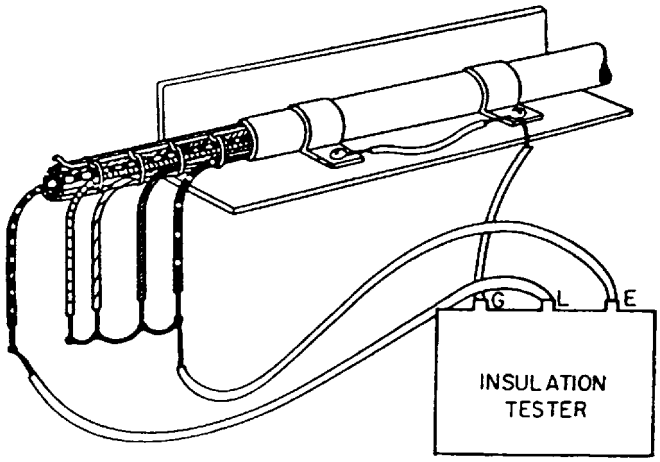

h.

Figure 6-1. (Continued) f) Connection for testing total resistance between one conductor and all others plus ground, g) Testing one conductor leakage to ground only, h) Testing one conductor to others in the bundle-leakage to ground eliminated by guard.

insulation system that otherwise may not show up during insulation resistance testing. Overpotential testing may be desirable as an overall quality acceptance test after installation, modifications, or expansion of a feeder cable system; as an additional check of critical, emergency power feeder cables; as an additional quality check that is known to have conducted high current due to a short circuit fault in the connected equipment; or, as a quality check after cable splices have been made. Overpotential testing is not recommended as a periodic, routine maintenance test under three conditions. First, if the cable cannot be completely disconnected or isolated from the connected load(s) or auxiliary devices such as surge capacitors, lightning arresters, fuses, cutouts, and switchgear bus, second, if unacceptable readings have already been obtained from general insulation resistance testing, and third, if the cables are known to be laying under water.

a. Direct current (DC) tests. There are two methods used for DC overpotential testing. In the first method, the voltage is raised gradually to the specified level. The rate of increase should be adjusted to maintain a steady charging and leakage current. The current for a DC testis measured in microampere. Sixty to ninety seconds has been found to be an acceptable average time to reach the final test voltage level. When this level has been reached, leakage current readings are taken and recorded at O, 1, 2, 3, 4, and 5 minutes. After the last reading, the voltage is slowly lowered and the cable is allowed to fully discharge. The second method is called the step method. Using this procedure, the test voltage is raised in steps at given intervals. The leakage current is measured and recorded at each new voltage level as well as the O, 1, 2, 3, 4 and 5 minute intervals after the final test voltage has been reached. The step method is intended to catch an undesirable trend in the leakage current before the cable actually fails. The test can be stopped before the final voltage is reached. An engineering judgment will be required to determine if the cable should be left in service or if remedial measures should be taken. In both test methods, good interpretation of the leakage current magnitudes and the trends is necessary. Temperature, humidity, and insulation surface conditions affect the readings. Table 6-1 should be used as a guide in determining the specified test voltages.

b. Alternating current (AC) tests. AC overpotential testing is severe and possibly destructive to the cable under test. In the AC test, the voltage is quickly raised from zero to the specified level. The test is usually held for one minute. The current is measured in milliamperes; however, its value is not important. The reading of current is provided so that the person running the test can determine if the particular test set has sufficient capacity for the task at hand. If the cable withstands the one minute application, the test has been passed. Failure results in short circuit and a ruined portion of the cable. The test set is designed to trip off immediately upon detection of the fault current. Table 6-1 gives the recommended test levels.

6-5. Cable trouble-shooting.

Table 6-2 provides information regarding the most common cable failure: overheating. Probable causes of overheating cables are listed along with recommended practices to remedy the problems.

Table 6-1. Conductor sizes, insulation thickness, test voltages.

Rated Circuit Voltage, Phase to Phase, Volts	Conductor Size AWG or MCM*	INSULATION THICKNESS				A-C TEST VOLTAGE		D-C TEST VOLTAGE	
		100 Percent Insulatation Level		133 Percent Insulation Level		100 Percent Insulation Level	233 Percent Insulation Level	100 Percent Insulation Level	233 Percent Insulation Level
		mils	mm	mils	mm	kV	kV	kV	kV
0-600	14-9	30	0.76	30	0.76	4.0	4.0	12.0	12.0
	8-2	45	1.14	45	1.14	5.5	5.5	16.5	16.5
	1-4/0	55	1.40	55	1.40	7.0	7.0	21.0	21.0
	225-500	65	1.65	65	1.65	8.0	8.0	24.0	24.0
	500-1000	80	2.03	80	2.03	10.0	10.0	30.0	30.0

* MCM-Thousands of circular mils.

100 percent level - Cables in this category may be applied where the system is provided with relay protection such that ground faults will be cleared as rapidly as possible, but in any cause within 1 minute. While these cables are applicable to the great majority of cable installations which are on grounded systems, they may be used also on other systems for which the application of cables is acceptable provided the above clearing requirements are met in completely de-energizing the faulted section.

CABLE RATED O-600V
OZONE-RESISTANT EHYLENE-PROPYLENE RUBBER INSULATION

133 Percent Level - This insulation level corresponds to that formerly designated for ungrounded systems. Cables in this category may be applied in situations where the clearing time requirements of the 100 percent level category cannot be met, and yet there is adequate assurance that the faulted section will be de-energized in a time not exceeding 1 hour. Also they may be used when additional insulation strength over the 100 percent level category is desirable.

(IPCEA S-68-51G, NEMA WC 8-1971).

Table 6-2. Cable maintenance--overheating problems.

Instal lat ion	Cause of overheating	Remedy
Cables in racks	Heat from lower cables in vertical racks rises and heats upper cables.	Provide baffles to deflect rising warm air.
	Cables spaced horizontally affected by mutual heating.	Increase space between cables. (For beat cooling, minimun center-to-center distance between cables should be twice the cable diameter).
	Cables closely spaced or in a location where heat is confined, such as near ceilings, etc.	If constricted portion of cable run is short, fans can be set up to provide cooling.
	External sources of heat.	Re-route cable or remove heat source. Shield cables from heat or ventilator with fan.
Cables in floor channels.	Mutual heating of cables that have been piled aimlessly in overcrowded floor channels.	Rack cables systematically and maintain spacing necessary to minimize mutual heating.
	Restriction of air circulation by solid covers on channels.	Where practical, replace solid covers with perforated covers to increase air circulation.
Cables in tunnels	Overloading	Re-route part of load from overloaded cables to cables carrying lighter loads.
	Mutual heating of cables spaced too closely on rack.	Space cables on racks to minimize mutual heating. Place cables near the floor.
		Force air circulation through tunnel.
	External sources of heat.	Insulate adequately from the external heat source.

Table 6-2. Cable maintenance--overheating problems--continued.

Installation	Cause of overheating	Remedy
Cables in underground ducts	Overloading, addition of loaded cables to duct bank without reducing the rating of cables already in bank	Transfer load from overloaded cables to cables carrying lighter loads. Place power cables in outside ducts with most heavily loaded cables at the corners of bank. Install ventilating covers on congested manholes. (A fan to force air out through a ventilating cover may help).
Cables buried in earth.	Overloading	Wetting dry soil improves its conductivity, and may slightly improve cable capacity. Only real remedy is transferring portion of load to another circuit.
Aerial Cables	Overloads. Cable in hot sun.	Reduce load. If practical, shade from sun. Capacity can be increased 15 percent by separating cables installed in one ring.
Cable Risers	Cable chosen for underground operation instead of in a conduit in air. Heating air rising and trapped at top of conduit. Exposure to sun.	Provide fans to cool risers during overload periods. Provide ventilating bushing at top of conduit. Shade risers, if possible.

Table 6-2. Cable maintenance--overheating problems--continued.

Installation	Cause of overheating	Remedy
All installations	High current because: low-power-factor equipment, and low voltage at receiving end.	Install capacitors to improve power factor. Raise voltage by means of taps on transformer or reduce voltage drop by moving single-conductor cables closer together. Move transformer closer to load. If load can be operated at two voltages, use higher value.
	Unbalanced currents because: unbalanced loading of phases, and unbalanced arrangement of single-conductor cables in group.	Balance arrangement of single-phase loads to divide current equally between three conductors. With two or more single-conductor cables in parallel per phase, consideration must be given to phase arrangement of cables to prevent unbalanced currents.

CHAPTER 7

SOLID-STATE ELECTRONIC EQUIPMENT

7-1. Solid-state maintenance.

Electronic system maintenance is required for proper operation. Specific maintenance procedures should be obtained from the equipment manufacturer. Preventing the solid-state component from failing will increase the electronic system's availability. Preventive maintenance applied to electronic systems should be directed toward minimizing the chance of component failures thereby reducing the causes of system failure. There are two primary causes of solid-state component failure. First is heat caused by overloading, surface contamination or poor ventilation. The second is vibration caused by mechanical stress, shock, moisture due to environment, overvoltage, electrical spikes or static discharge while handling components.

a. Preventive measures. The following are general preventive measures applicable to individual equip ment within a system. Detailed preventive maintenance of specific solid-state components is covered later in this chapter.

(1) *Keep equipment clean.* Limit overheating and the chances of current leakages or flashover by periodic vacuuming or blowing out dirt, dust, and other surface contaminants from the equipment enclosures. Use a non-conducting nozzle on the vacuum or air hose (a metal nozzle can cause component damage and/or breakdown). Do not use high pressure air, it may damage components.

(2) *Keep equipment dry.* Space heaters will prevent the accumulation of moisture and subsequent corrosion thereby limiting intermittent component failures.

(3) *Keep equipment tight.* Tight connections and secure leads and contacts limit adverse effects of vibration.

(4) *Keep equipment cool.* Proper ventilation limits overheating due to high ambient temperature.

b. System checks. The following are basic system checks which may be applicable to components and subassemblies within a given system.

(1) *Magnetic device.* Check the operation of magnetic and contact-making devices in accordance with applicable instructions. Brushes in motors (used for all motor driven position adjusters, etc.) and all exposed brushes or contact buttons for rheostats, potentiometers, and variable transformers should be inspected every 12-18 months. For frequent operations or adverse operating conditions, such as very dusty, humid, and corrosive areas, inspections may have to be done every 4-6 months. If arcing occurs, or if the brushes are badly worn, replacement is recommended.

(2) *Input and output.* Input and output signal voltages, which can be considered important indicators of operating conditions, should be checked on the regulator or function panels. A high input impedance voltmeter should be used for these measurements. The checks should be performed every 12-18 months. Data should be recorded for future reference and the test points where the data was taken should be fully explained.

(3) *Semiconductor-controlled rectifier (SCR).* Spot check operation of SCR's by observing their neon lamp monitors. All lamps should either glow or not glow as a group. When lighted, all lamps should glow with about the same intensity with one electrode in each lamp glowing somewhat more brightly than the other.

(4) *Planned outages.* For planned outages, the following maintenance should be performed:

(a) General cleaning with either low pressure, dry air and/or a vacuum cleaner. Any air intake filters should be inspected, cleaned if possible, or replaced at this time.

(b) Check all brushes, small auxilliary motors, variable slide-wire resistors (rheostats), potentiometers, and variable transformers.

(c) Inspect all control and power relays for freedom of operation and the condition of their contacts. Also, check for failed surge suppression devices when these are provided across the operating coil connections.

(d) Check for any loose connections or evidence of heating on large cable, bus, and large SCR's or rectifiers. Correct cause when found.

(e) Check SCR or rectifier legs and corresponding fuses with an ohmmeter. Test all elements of parallel groups individually.

7-2. Solid-state components.

Maintenance procedures for solid-state component are designed to detect evidence of abnormal heating, moisture, dust and other contaminants; promote good reliability and minimize downtime; prolong the useful life of the equipment; and, recognize repeated component failures and take corrective actions.

a. Static testing. For this work, static testing is taken to mean one or more electrical tests, performed on a given component, using very low voltages or powers. Furthermore, these tests are designed to give a very general idea as to the component's overall condition and not its perfor-

mance per published specifications. To test most capacitors, rectifiers (diodes), resistors, potentiometers, SCR's, and bipolar junction transistors, the volt-ohmmeter (VOM) is the recommended instrument (para 13-2). There are many types and models available; however, the analog meter still serves very well for static testing. It should be noted that meters with very low energy resistance test ranges will not produce the same results described in the paragraphs below. Most all new digital models have the low energy resistance test feature. The manufacturers have recognized this problem and usually provide one additional function marked "diode test" or simply the ANSI symbol for a diode. This type of test is also different from those described below. The diode test feature differs from the resistance test, using an ohmmeter, in that the instrument generates a freed current (about 10-100 milliamperes) and passes it though the device under test. The corresponding voltage generated across the device terminals is usually the reading that appears on the instrument's display. The maximum voltage is never more than the battery voltage used to power the meter. The ohmmeter applies a relatively constant voltage and allows the current to vary in proportion to the total circuit resistance (Ohm's Law). Before testing, the ohmmeter must be calibrated for zero ohms. This nulls out the test lead resistance; the test probes are touched together and the meter reading is adjusted to indicate zero. Then, the particular component to be tested must be isolated from the rest of the circuit. This is done by disconnecting at least one lead of the component.

b. Capacitors. A capacitor stores electrical energy for dissipation as needed in an electrical circuit. The amount of charge stored depends upon the value of the capacitor (expressed in pico-, nano-, or microfarads) and the applied voltage. There are many types of capacitors used in power electronic and control equipment (fig 7–l). The more commonly used types are: oil-impregnated and non-polarized; polarized aluminum electrolytic; polarized wet slug and dipped tantalum; non-polarized wet slug and dipped tantalum; and, non-polarized paper, plastic film, mica, or ceramic capacitors. A capacitor is defective, or will soon be defective if it has a damaged case, is leaking fluid or electrolyte paste, or testing shows it to be nearly shorted or completely open.

(1) *Inspection for oil leaks.* Leaking capacitors can be found by locating the oil or fluid that has seeped from a cracked case or relief plug. A leaking capacitor may be kept in service for brief emergency periods but should be replaced before it fails altogether, or the leaking fluid damages other equipment. Before rejecting a capacitor for leaking oil, be sure the oil was not deposited by some other apparatus or another capacitor located above. An effort should be made to determine the nature of the leaking fluid. If the capacitor is not specifically stamped: "NON-PCB" or "NO PCB's", then the Hazardous Waste Coordinator should be contacted and the capacitor disposed of as recommended by that Office.

(2) *Testing.* Open or solid capacitors maybe found by using an ohmmeter to test as follows:

(a) Identify the polarity of the terminals when electrolytic capacitors are to be tested. Always test with the plus (+) lead of the meter connected to the terminal marked plus (+) or the red dot. Reversed polarity, even at low voltages, causes high dissipation in the electrolyte paste and gives poor test readings on a possible good unit.

(b) For values under one (1) microfarad, use the "X1OO" scale. For higher values, use either the "X100" or the "10X" scale.

(c) Discharge the capacitor before testing. Use a 100-1000 ohm resistor to limit the discharge current. Remove the resistor connection.

(d) Connect the test probes and note the meter deflection. If the capacitor is open, the ohmmeter will continually indicate infinity ohms. The meter needle will not move the moment the leads are touched to the capacitor terminals. Replace capacitors that are open circuit. If the capacitor is shorted, the meter needle will immediately deflect to zero or some low value and remain there. Replace capacitors that are shorted. A good capacitor will cause the meter needle to deflect toward zero ohms the moment the leads are touched to its terminals. However, the needle will begin to indicate ever-increasing resistance as the capacitor charges up. The amount of initial deflection and the rate of return of the needle depend on the value of the capacitor and the ohms scale multiplier selected. Capacitors that are "leaking electrically" will cause the meter needle to deflect as usual; however, the final resistance value may be only several hundreds of ohms rather than the several thousands that can be expected. Capacitors not properly isolated from the circuit during the test often give this kind of reading because of the other components connected in parallel. If it is certain the capacitor alone is reading this way, it should either be replaced or retested with an analyzer. All of the test results described above will be more readily understood if several values of capacitors that are known to be good are tested first.

c. Rectifiers and semiconductor-controlled rectifiers (SCR). A rectifier (diode) is a solid-state device that limits the flow of electrical current to one direction. The semiconducting material within the device acts as an insulator in one direction (within certain

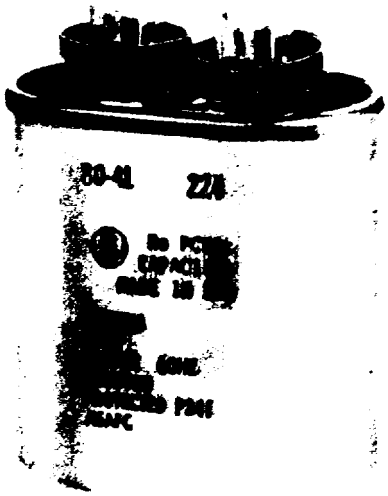

a.

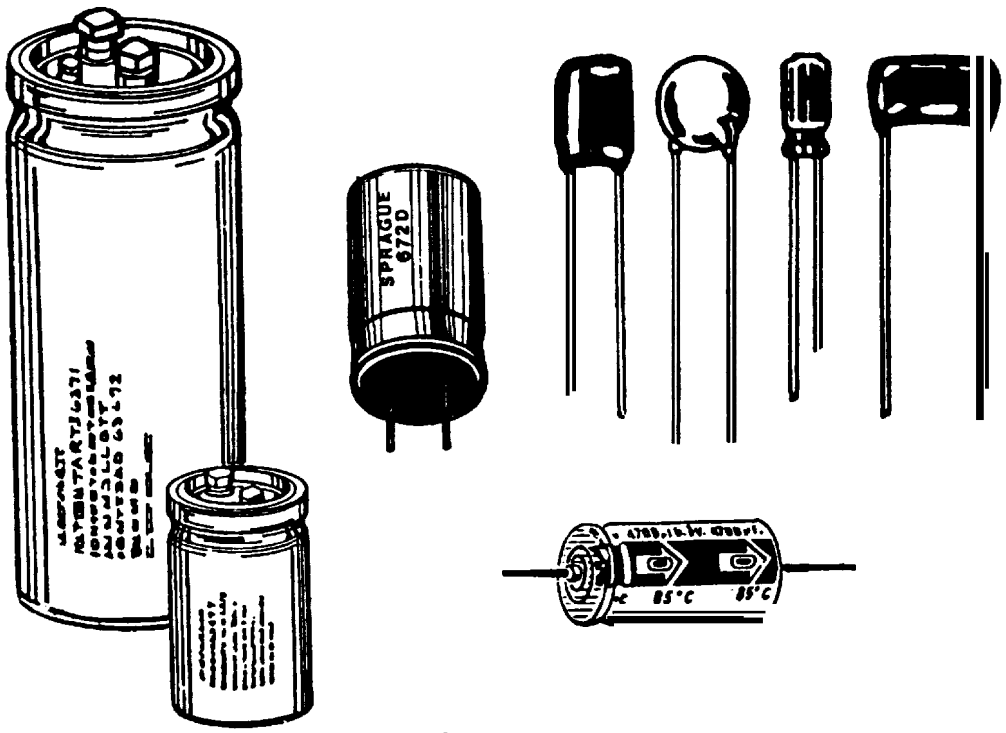

b.

Figure 7-1. Typical Capacitor Types: a) Oil-filled AC, snubber capacity b) Electrolytic, ceramics and plastic film types for DC applications

voltage limits) and as a fairly good conductor to current flow in the opposite direction. The ohmmeter may be used to measure the forward resistance (conduction) and the reverse resistance (insulating or blocking) of the device in order to determine its overall condition. Testing should be done as shown in figure 7–2c. Connect the ohmmeter to read resistance in the forward direction. The reading should range between 6-35 ohms. This is the range for general purpose rectifiers. Very small, signal type rectifiers may read as high as 70-100 ohms. Very large current capacity rectifiers may read between five and ten ohms. Finally, germanium diodes read lower than those made from silicon, and fast recovery types read lowest of all: two to six ohms. Connect the ohmmeter to read resistance in the reverse direction. The reading obtained should be between 10,000 and 100,000 ohms or possibly more. The reading tends to be near the lower end of the range for large current capacity types. If the diode is good, the values listed above will be obtained. Readings of one (1) ohm or less mean the device is damaged or shorted. Reverse direction readings less than 10,000 ohms generally mean the device is damaged or electrically leaking. In both cases, the unit should be replaced.

(1) *Semiconductor-controlled rectifier (SCR). The* SCR is a diode with the ability to be forced into conduction by the application of a gate signal. The SCR cannot conduct in the reverse direction if it is a good unit. However, the SCR will not conduct in the forward direction either until a small gate voltage is applied. Once in conduction, the SCR remains that way until its current (not the voltage) drops below the minimum holding value for that particular device. The SCR should be tested like the diode rectifier (fig 7–2d) but with the following modifications to the procedure:

(a) Connect the ohmmeter to read forward resistance. The meter needle should read infinity ohms before a gate-cathode voltage is applied. Connect an additional voltmeter between the gate and cathode leads of the SCR. Apply an adjustable DC voltage to these leads and measure the voltage needed to start conduction. The ohmmeter will give readings like those for the diode when conduction has been established. Note the gate-cathode voltage when conduction starts. It should be between 0.6 and 1.3 volts for the most general purpose units.

(b) Disconnect the gate lead. The SCR will remain in conduction until the ohmmeter leads are removed. This condition depends on two things: first, the particular SCR must have a very low holding current; second, the battery in the ohmmeter must be fresh or fully recharged. A gate to cathode resistance check may be applied also. With plus (+) on the gate, the ohmmeter reading will be similar to the diode forward reading. There is no blocking reading for the reverse. Readings for the cathode to gate connection are generally only 10-50% higher than those obtained in the forward mode. If a test battery (fig 7–2d) is not available for the conduction test, an alternate test can be done using only the ohmmeter. This simplified test is harder to interpret and is less accurate than the procedure described above. To do the test, setup as in paragraph *(a)* above. In place of the test battery, touch the gate lead to the anode (+) lead. The SCR should begin to conduct.

(2) *Other devices.* There are many styles and types of devices for both diodes and SCR's. It is beyond the scope of this manual to describe all of them in detail. several case styles (T62, T72, DO-200, and TO-200 for diodes, and R62, R72, and T9G for SCR's) are designed to operate clamped between heat sinks. There is a spring contact within the device that prevents operation unless the unit is physically compressed. These devices should be tested in place if possible. Otherwise, moderate pressure applied with the fingers is usually sufficient to "make" the internal connection. Apiece of insulating material should be placed between the fingers and SCR surface to prevent false leakage readings.

d. Resistors and rheostats. A resistor is a passive component used to hinder the flow of electric current. Many sizes, shapes, values and types of resistors are available. The most common types are wire wound (resistance wire wound around an insulator) and carbon stick (pressed carbon tubes or rods). A rheostat is simply a variable resistor. Like resistors, rheostats also are made in numerous sizes, shapes, values and types. Again like the resistor, the rheostats are wire wound or carbon composition. The rheostat is normally 3/4 circular in design with a terminal at each end. A movable contact or brush known as the "wiper" rides on the rheostat material surface and can be moved to select the desired resistance value. Use an ohmmeter to accurately measure the resistance of a resistor or rheostat. However to avoid false readings of devices which may be connected in parallel, disconnect one side of the component to be tested before making resistance measurements. Replace components that do not measure within plus or minus five percent of the value given in the manual or as specified on the schematic diagram, unless other tolerances are indicated. Replace broken, cracked or damaged units and support brackets.

e. Zener diodes. A Zener diode is a semiconductor device like the rectifier diode, but the Zener device has its composition and P–N junction characteristics carefully controlled in order to produce a de-

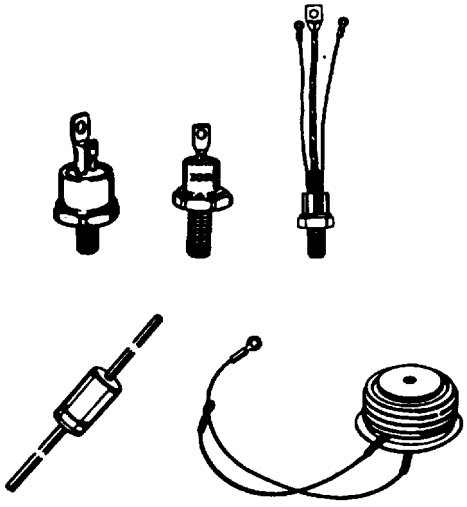

a.

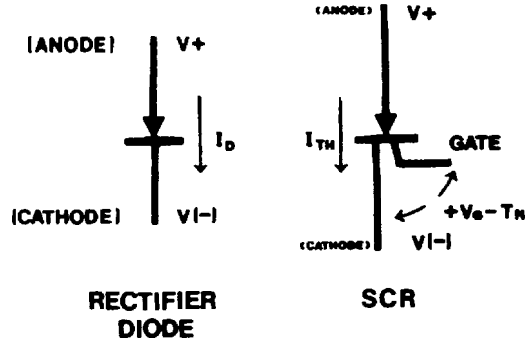

b.

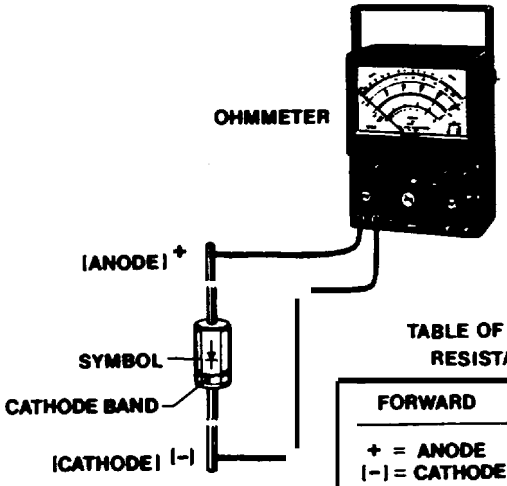

TABLE OF TYPICAL RESISTANCES

FORWARD	REVERSE
+ = ANODE (-) = CATHODE	(-) = ANODE + = CATHODE
x1 - SCALE	x100 SCALE
SILICON OR SMALL SIGNAL 12 - 100Ω	1,000 - 250,000
GERMANIUM OR LARGE POWER TYPE 5 - 15Ω	1,000 - 100,000

c.

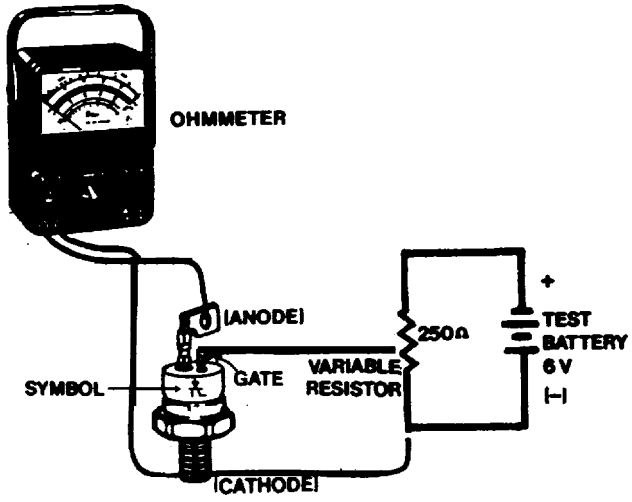

TABLE OF TYPICAL RESISTANCES

ON	BLOCKING FWD. OR REV.
V_G - T_H ≥ 0.2V TO 1.6V	V_G - T_H 0 - 0.2V OR (OPEN)
6 - 80Ω	10,000 - 500,000 Ω

d.

Figure 7-2. Diodes and SCR's: a) Various package styles, b) symbols and polarity, c) Testing a Diode, d) Testing an SCR.

sired breakdown voltage in the reverse direction. The Zener diode will provide rectification in its forward mode; however, the precise voltage developed across its reverse junction is of greater interest. This property is useful as a voltage reference. No significant reverse current flows until the Zener voltage (V) is reached. At this point, a sharp increase in reverse current occurs as illustrated in figure 7-3 characteristics “A” and "B". The device will maintain its voltage over a considerable range of reverse current. It should be noted that any diode, but especially Zener diodes, should be operated with some means of external series resistance in order to limit the maximum current flow to within the rating of the device. The Zener diode can be manufactured to produce reverse breakdown (Zener) voltages from 0.5-100.0 volts or more with power ratings from 025W—100W. The Zener diode is teated like the general purpose rectifier diode; however, its Zener voltage (V) cannot be determined using the ohmmeter tests. An external test voltage must be applied to determine V (fig 7-4).

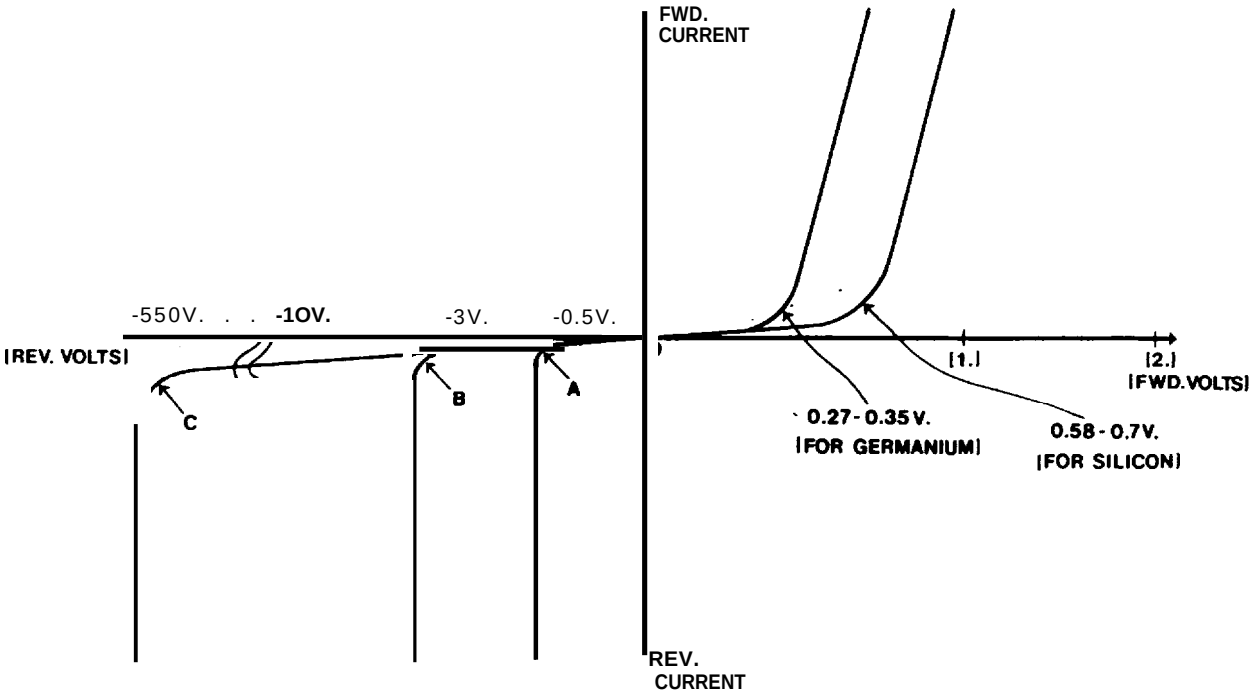

Figure 7–3. Characteristics of Diodes and Zeners: a) Zener action at 0.5V, b) Zener action at 3.0V, c) Reverse breakdown (PRV, PIV, v_{rrm}) for a rectifier Diode.

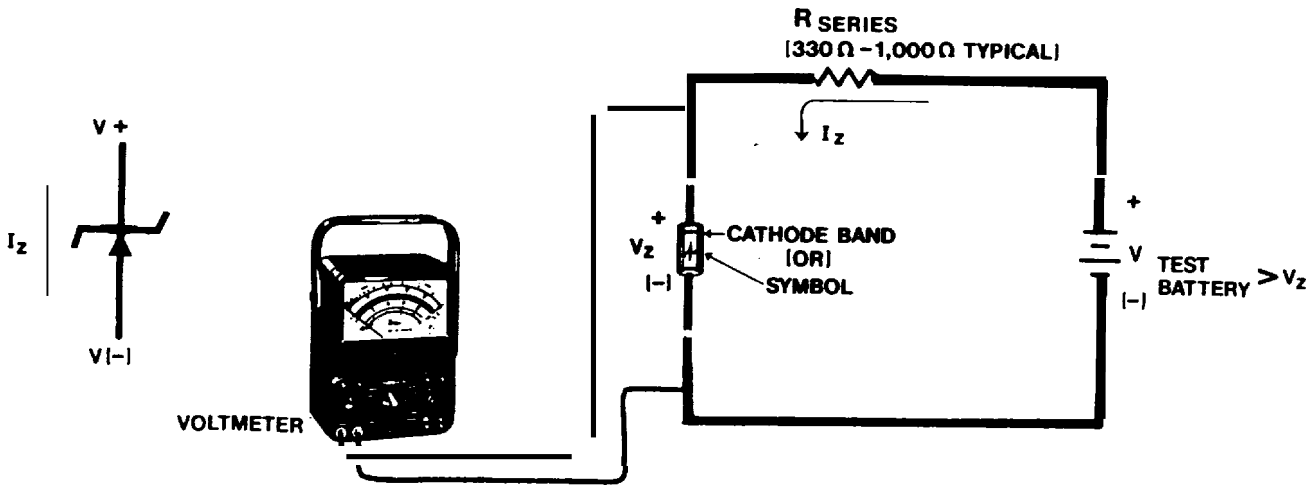

Figure 7-4 Testing Zener Voltage.

f. Transistors. Transistors are three terminal, solid state devices constructed so that the current across the base-emitter junction will control a greater amount of current crossing the collector-emitter junction. Because a smaller current can control a larger one, the transistor provides gain or amplification. Transistors vary in size, power, and voltage ratings. Some idea of the electrical values, type, and application of the transistor in the circuit should be known before testing is attempted.

(1) *Testing.* The bipolar junction transistor (BJT) is tested just like the general purpose rectifier diode. These transistors are actually two diode junctions combined in such a way as to obtain current control. General purpose transistor testing is done as follows (fig 7-5):

(a) Check the polarity of the test leads and zero the ohmmeter.

(b) Determine the type of transistor to be tested, that is whether it is a positive, negative, positive (PNP) or a negative, positive, negative (NPN) junction type.

(c) Set the scale multiplier to “X1” or “L0” and recheck for zero ohms.

(d) Test all combinations as shown in the diagrams and tables given in figure 7-5a or 7-5b.

(e) Test all combinations as shown with the scale multiplier set to "X100” or “H1”. If the values shown in the tables are not obtained, the transistor part number should be checked to confirm its type, or the unit should be replaced if the type is known to be correct.

g. Other solid-state devices. There are numerous other types of solid-state devices used in modern electronic and control systems. Most of these cannot be statically tested with an ohmmeter and expected to give meaningful results. The following is a brief list of devices that yield valid test results only in a circuit:

(1) Field-effect transistors (FETs), metal-oxide semiconductor field-effect transistors (MOSFETS), or insulated-gate field-effect transistors (IGFETs).

(2) Unijunction Transistors (UJTs) or Programmable Unijunction Transistors (PUTs).

(3) Analog Operational Amplifiers and Integrated Circuits.

(4) Any class of Digital Logic Integrated Circuit.

7-3. Electrical disturbances (power quality).

Equipment with sensitive electronic circuits (digital clocks, VCRs, computers, data terminals) may experience memory loss, system malfunction and even component failure due to electrical power source disturbances. Sags, surges and harmonics are some common types of disturbances. Disturbances caused by other customers or even by customer’s own equipment may also affect customer’s equipment. “Power quality” is a relatively new term used to describe the quality of power (absence of voltage dips, surges, harmonics outages, frequency variation) at the user’s location. Traditional measurements for reliability studies don’t deal with the power quality needs of sensitive electronic equipment. Rather, they deal with the permanent or prolonged outage and how to improve upon it. While this is indeed important to sensitive loads, there is increased concern for short term or momentary disturbances. In addition to voltage limits, sensitive loads such as computers typically require the frequency to be within plus or minus .05 Hz, the rate of change of frequency less than 1 Hz/sec, voltage waveform distortion under five percent and voltage unbalance less than three percent. For specific applications, the power quality requirements should be obtained from the manufacturer of the sensitive equipment. Some of the common types of disturbances, the symptoms, causes and effects are summarized in table 7-1.

7-4. Disturbance measurement and monitoring.

Conditions may be quite different at any given site, and it is desirable to obtain specific data about the actual situation, if possible, before considering a remedy. If it is an existing site, it is useful to obtain any historical data which might correlate sensitive equipment operation with power disturbances. The type of data includes the sensitive equipment operating log and maintenance records, and electric utility operating log and voltage recordings.

a. The most useful activity for any existing site is to conduct a site power line disturbance study for a one or two month period-including the storm season, if possible. The monitoring should be at the same point that powers the sensitive equipment and must use equipment capable of recording the types of transients that can affect sensitive loads.

b. There are several types of equipment designed to perform this monitoring function. Unlike the traditional strip or circular chart recorders, this equipment is capable of recording variations of voltage in the short time periods of interest for sensitive equipment, yet operate continuously for weeks at a time. Much of the equipment is of the digital readout type which, unfortunately, can lead to improper interpretation of the conditions at the site because it cannot always distinguish between harmless and harmful disturbances.

c. Much more useful monitors produce an analog recording of the disturbances with the ability to expand the waveforms to examine them in detail.

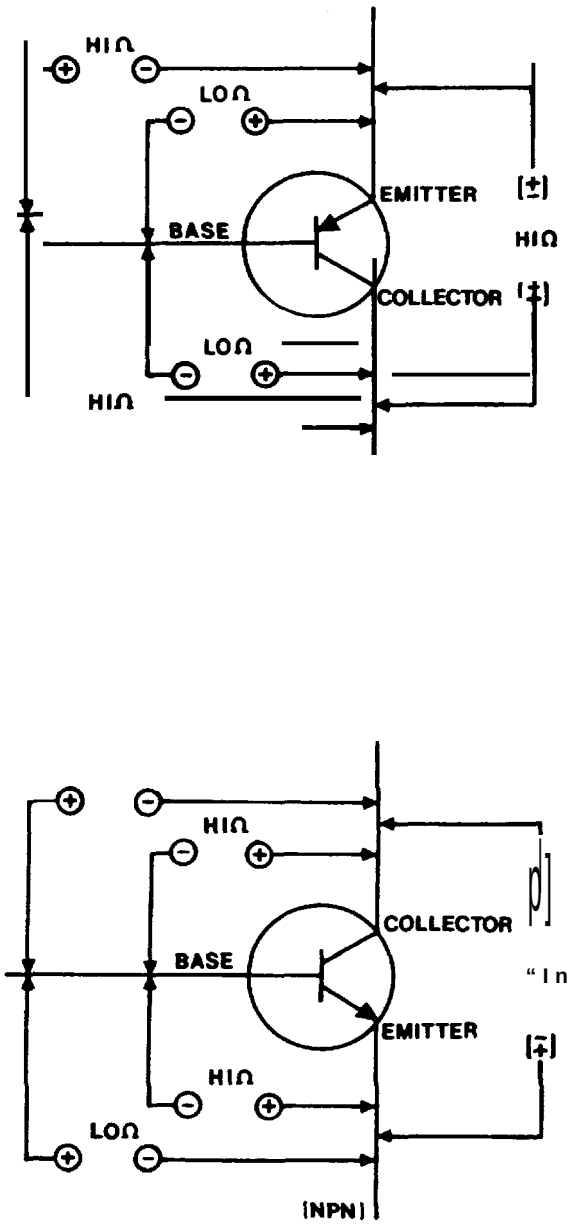

TYPICAL RESISTANCE VALUES FOR MOST BIPOLAR JUNCTION TRANSISTORS

FORWARD JUNCTIONS LOΩ x 1 SCALE	REVERSE JUNCTIONS HIΩ x 100, x 1000 SCALE
PNP-TYPE EMITTER TO BASE COLLECTOR TO BASE 8 - 20Ω	**PNP-TYPE** BASE TO EMITTER BASE TO COLLECTOR 1000 - 50,000Ω COLLECTOR-EMITTER ALWAYS GREATER THAN 10,000Ω
NPN-TYPE BASE TO EMITTER BASE TO COLLECTOR 8 - 20Ω	**NPN-TYPE** EMITTER TO BASE COLLECTOR TO BASE 1000 - 50,000Ω COLLECTOR-EMITTER ALWAYS GREATER

Figure 7-5. Transitor Testing: a) PNP type, b) NPN type.

With this data, it is possible to determine if a disturbance is harmful or not by comparing it with specific tolerance requirements for the sensitive equipment actually used on site. This tolerance information is generally available from sensitive equipment manufacturers upon customer request. With the expanded waveform capability, it is often possible to examine transients and observe a characteristic "signature" which will identify the source of the disturbance.

7-5. Voltage surge suppression.

Voltage surges on a power system are a common power problem experienced by sensitive electronic equipment and mostly seen by the computer user. These transients can be the cause of lost data, false triggering and equipment failure. These transients are generated both internally by the user and externally on the utility primary due to lightning and equipment switching. Many different types of volt-

Table 7-1. Power quality problems summary.

PROBLEM TYPE	SYMPTOMS	CAUSES	EFFECTS
TRANSIENTS (General) • duration: $\leq$ 0.5 cycles ($\leq$8 ms) • coupling mechanism: conductive, electromagnetic. • Transient problems are mainly due to the increased use of sensitive electronic equipment without regard for the realities of normal power system operation and the operation of the customer's facility. • It is very fficu trace source transient. ransients sual have less energy momentary sturbances • If transient suppressors are to be selected for protection, it is important to select compatible, effective, high quality product. • There is a general consensus that most transients get into computer logic and memory circuits by poor grounding or EMI, not by conduction	• high amplitude, short duration voltage disturbance • can occur in common and normal mode	• switching inductive loads on or off (motors, relays, transformers, x-ray equipment, lighting ballasts) • consumer loads (personal computers, VCRs, refrigerators, washers & dryers, microwave ovens, light dimmers) • operation of UPS/SPS systems may cause notching • arcing ground • lightning • capacitor switching • fault clearing	• data alterations • microprocessor-based equipment errors • hardware damage of electronic equipment • current limiting fuse operation
Impulses rans Categ	• Notches - out-of-phase impulses which decrease the instantaneous voltage. • Spikes - in-phase impulses which increase instantaneous voltage	• Normal mode impulses are typically the result of the switching of heavy loads, or of power factor correction capacitors. • Common mode impulses are often used by lightning.	Same as above.
Oscillations (Transients Category	Damped high frequency oscillations from a few hundred Hz to 500 kHz) that decay to zero within a few milliseconds		Same as above.

Table 7-1. Power quality problems summary—continued.

PROBLEM TYPE	SYMPTOMS	CAUSES	EFFECTS
Voltage Deviations (Long Term) • duration: 2 secs or longer • coupling mechanism conductive • under voltage - a list of overloaded distribution transformer can indicate areas prone to undervoltage conditions. • Undervoltages can be reduced by practicing regular maintenance of appliances, cable and connections, checking for proper fuse ratings, transferring loads to separate circuits, increasing feeder rating or voltage, selecting a higher transformer tap setting, replacing an overloaded transformer or providing an additional feeder.	Any long term change above (overvoltages) or below (undervoltages) the prescribed input voltage range for a given piece of equipment.	Undervoltages may be caused by: • overloaded customer wiring • loose or corroded connections • unbalanced phase loading conditions • faulty connections or wiring • overloaded distribution system • incorrect tap setting.	Undervoltages cause: • errors in sensitive equipment operation • low efficiency and reduced life of electrical equipment such as motors, heaters • lengthens process time of infrared and resistance heating processes • hardware damage • dimming of incandescent lights, and problems in turning on fluorescent lights.
Brownouts	A type of voltage fluctuation. Usually a 3-5% voltage reduction.	• poor wiring or connections • high power demand within building or local area • intentional utility reduction to reduce load under emergency system conditions, very rarely done • planned utility testing	• Overheating and reduced line of electrical equipment and lighting • Blistering of infrared processes
Overvoltages	• High voltages during low load levels.	Overvoltages may be caused by: • improper application of power factor correction capacitors • incorrect tap setting.	Overvoltages cause: • overheating and reduced life (insulation) of electrical equipment and lighting • blistering of infrared processor

Table 7-1. Power quality problems summary—continued.

PROBLEM T	SYMPTC	CAU	EFFE
MOMENTARY PROBLEMS (General) • duration: 0.5-120 cycles (8 ms-2s) • coupling mechanism: conductive Sags/Voltage Flicker: • When starting large loads, such as motors, high inrush currents are produc which drop the voltage for short period This is a relatively common problem an can be prevented by using reduced volt motor starters, by reducing the number large loads operating simultaneously, b restricting the number of motor starts a given time, by transferring the large lo its own circuit, by upgrading feeder voltage, by using cable of proper rating and by choosing equipment that is compatible with applicable Standards a the utility voltage flicker curve.	• Sags - Low voltage on o more phases. • Voltage Flicker - receptive sags or s in the voltage.	• starting large loads (motors, air conditioners, electric furnaces, etc.) • overload wiring and incorrect fuse r • fuse and breaker clearing • lightning (indirect cause due to effec lightning arresters) • ground faults • utility switching/equipment failure • large cyclic loads such as spot weld induction or arc furnaces, and motors when cycled.	• common cause of power related computer system fai • hardware damage unlikely • flickering of lights • motor stalling • reduced life of motors and d equipment • digital clock flash • TV picture size ch
Swells • duration 0.5-120 c	High RMS volta disturbance on o more phases.	• open neutral connection • insulation breakdown • sudden load reduction • improper wiring, which restricts the amount of current available for loads • fault on one line causing voltage ri other phases • open conductor fault	• light flicker • degradation of electrical con • TV picture size change • not very troublesome usuall

Table 7-1. Power quality problems summary—continued.

PROBLEM TYPE	SYMPTOMS	CAUSES	EFFECTS
Voltage Deviations (Long Term) • duration: 2 secs or longer • coupling mechanism conductive • under voltage - a list of overloaded distribution transformer can indicate areas prone to undervoltage conditions. • Undervoltages can be reduced by practicing regular maintenance of appliances, cable and connections, checking for proper fuse ratings, transferring loads to separate circuits, increasing feeder rating or voltage, selecting a higher transformer tap setting, replacing an overloaded transformer or providing an additional feeder.	Any long term change above (overvoltages) or below (undervoltages) the prescribed input voltage range for a given piece of equipment.	Undervoltages may be caused by: • overloaded customer wiring • loose or corroded connections • unbalanced phase loading conditions • faulty connections or wiring • overloaded distribution system • incorrect tap setting.	Undervoltages cause: • errors in sensitive equipment operation • low efficiency and reduced life of electrical equipment such as motors, heaters • lengthens process time of infrared and resistance heating processes • hardware damage • dimming of incandescent lights, and problems in turning on fluorescent lights.
Brownouts	A type of voltage fluctuation. Usually a 3-5% voltage reduction.	• poor wiring or connections • high power demand within building or local area • intentional utility reduction to reduce load under emergency system conditions, very rarely done • planned utility testing	• Overheating and reduced line of electrical equipment and lighting • Blistering of infrared processes
Overvoltages	• High voltages during low load levels.	Overvoltages may be caused by: • improper application of power factor correction capacitors • incorrect tap setting.	Overvoltages cause: • overheating and reduced life (insulation) of electrical equipment and lighting • blistering of infrared processor

Table 7-1. Power quality problems summary—continued.

Power interruptions • duration of momentary interruptions: 2 mins. or less • duration of sustained interruptions: 2 mins. or longer • coupling mechanism: conductive • Review Overcurrent Protection in Distribution System. • Solutions include employing UPS systems, allowing for redundancy, or installing generation facilities in the customer's facility.	Total loss of input voltage. Often referred to as "blackout" or "failure" for events of a few cycles or more, or "dropout" or "glitch" for failures of shorter duration.	• operation of protective devices in response to faults that occur due to acts of nature or accidents • malfunction of customer equipment • fault at main fuse box tripping supply	• loss of computer/controller memory • equipment shutdown/failure • hardware damage • product loss

Voltage Phase Unbalance
• duration: 2 seconds or longer
• coupling mechanism:
  • conductive
  • electromagnetic
• Only affects 3 phase customers
• Usually due to customer hook-ups of large single phase loads
• Survey all feeders regularly to prevent this problem
• Can be improved by load reconnections.
	Unequal phase voltages in magnitude and/or angle	• unbalanced phase loading conditions
		• defective transformers
		• ground faults
			• premature failure of motors and transformers due to overheating

Frequency Deviation • duration: continuous • coupling mechanism: conductive • The frequency of public power in North America is virtually standard at 60 Hz. Most of the rest of the world has a 50 Hz supply. • The frequency is usually very stable.	Variation of frequency from 60 cycles per second can be higher or lower.	• under upset conditions, usually very rare.	• malfunctioning of timing circuits and disk and tape drives • malfunctioning of ferroresonant transformers

Table 7-1. Power quality problems summary—continued.

Harmonic Distortion • duration: continuous • coupling mechanism: conductive, electromagnetic • Ideally, harmonics should be suppressed at the source	Voltage deviation from a true sine wave, due to unwanted frequencies that are multiples of the fundamental (60 Hz)	• Operation of any static power converter which converts AC to DC or DC to AC, or any solid state switch, or equipment containing these devices (electric variable speed drives, many computer power supplies, dimmer switches, variable speed drills, UPS) • welding equipment • induction furnaces • arc furnaces • microwave ovens • battery chargers (e.g. UPS or vehicle) • elevators • saturated utility transformers	• serious damage to capacitors and transformers. • decreased motor performance (reduced efficiency, overheating, torque pulsations) • premature equipment failure • maloperation of control equipment; false triggering of SCRs • interference with computers • amplification of harmonic levels due to resonance • incorrect readings on mechanical timing relays and watt-hour meters • blown fuses • humming on telephones • television interference
Electrical Noise • duration: continuous • coupling mechanism: conductive, electromagnetic, common impedance	Low level signal superimposed on the power sine wave. Similar to a continuous or cyclic occurrence of transient oscillations, in common and normal mode.	• improper grounding often causes common mode noises • loose or corroded connections • insulator leakage • welding • radio and TV transmitters • gas discharge lamps • poor motor brush contact • normal operation of computers and electronic equipment • lightning • switching of customer loads	• data alterations • microprocessor-based equipment errors • increased audible noise • communication interference

Table 7-1. Power quality problems mary—c

PROBLEM TYPE	SYMPTOMS	CAUSES	EFFECTS
MOMENTARY PROBLEMS (General) • duration: 0.5-120 cycles (8 ms-2s) • coupling mechanism: conductive Sags/Voltage Flicker: • When starting large loads, such as motors, high inrush currents are produced which drop the voltage for short periods. This is a relatively common problem and can be prevented by using reduced voltage motor starters, by reducing the number of large loads operating simultaneously, by restricting the number of motor starts at any given time, by transferring the large load to its own circuit, by upgrading feeder voltage, by using cable of proper rating, and by choosing equipment that is compatible with applicable Standards and the utility voltage flicker curve.	• Sags - Low voltage on one or more phases. • Voltage Flicker - receptive sags or surges in the voltage.	• starting large loads (motors, air conditioners, electric furnaces, etc.) • overload wiring and incorrect fuse rating. • fuse and breaker clearing • lightning (indirect cause due to effects of lightning arresters) • ground faults • utility switching/equipment failure • large cyclic loads such as spot welders, induction or arc furnaces, and motors when cycled.	• common cause of power related computer system failures • hardware damage unlikely • flickering of lights • motor stalling • reduced life of motors and driven equipment • digital clock flashing • TV picture size change
Swells • duration 0.5-120 cycles	High RMS voltage disturbance on one or more phases.	• open neutral connection • insulation breakdown • sudden load reduction • improper wiring, which restricts the amount of current available for loads • fault on one line causing voltage rise on other phases • open conductor fault	• light flicker • degradation of electrical contacts • TV picture size change • not very troublesome usually

age suppressors, filters, etc. are used to protect the sensitive electronic equipment. These types of equipment are called power conditioners.

a. Transient suppressors. Transient suppressors are very low cost devices available for microcomputers in the form of outlet strips similar to extension cords with multiple receptacles. They usually contain metal oxide varistors (MOVS) and sometimes silicon avalanche diodes (SADS). These are typically disc shaped devices connected between the power lines and, sometimes, from line to ground. They absorb energy from transients which exceed their threshold (typically 100 percent above normal peak voltage). Because of their small size and low cost compared with the equipment they serve and the cost of determining if such transients exist at a given installation, many people provide this protection as insurance. This type of transient suppressors can be provided for a nominal cost and most of the more expensive power conditioners such as line voltage regulators, static switches and UPS systems have these devices built in. They can even be added to a distribution panelboard, if not included elsewhere. Another form of transient suppressor, a surge arrester, is intended to lower the transient energy level to that which can be handled by downstream power conditioners, such as MOVS or filters. They typically use gas discharge tubes which are slower acting than MOVS, but can absorb more energy. To be effective, however, they too must be coordinated with upstream surge arresters having greater energy absorbing capability. Usually, this is done at each point of voltage transformation back to the incoming line and is best coordinated with the electric utility. Packaged transient suppressor systems combining the devices described above are available which, when properly installed, will limit expected surges as defined by the IEEE Standard C62.41.

b. Filters. Line filters are used to reduce electromagnetic interference (EMI) and/or radio frequency interference (RFI) to acceptable levels. Generally small and low in cost, they, too, are usually built into sensitive equipment and the more expensive power conditioner equipment. The simplest form of filter, a low pass filter, is designed to pass 60 Hz voltage but to block the very high frequencies or steep wavefront transients. They are not effective for frequencies near 60 Hz, such as low order harmonics, but become effective in the Khz range. Filters can be connected line to line or line to neutral for rejection of normal mode noise. They can also be connected line to ground for common mode noise rejection. Some of the better transient suppressor outlet strips also contain these falters.

c. Isolation transformers. Isolation transformers are more expensive power conditioners. They provide two functions. One is the ability to change to a new voltage level and/or to compensate for high or low site voltage. For example, by using 480V input up to the point of use and then transforming to 120V or 208Y/120V, the switchgear and wiring can be reduced in size and the effect of line drop reduced. If the voltage at the point of use is too low due to line drop, it can be manually boosted in steps by connecting to different taps on the transformer windings. The second function of the isolation transformer is to provide for the ground reference right at the point of use. This eliminates the problem of common mode noise induced through “ground loops” or multiple current paths in the ground circuit upstream of the established reference ground point.

d. Voltage regulators. Most of the voltage problems except outages can be handled by the addition of voltage regulators equipped with transient suppressors. Several solid-state techniques have been developed in recent years to replace the older, slow acting electro-mechanical type. One type of fast response regulator is the phase modulating type. It usually utilizes thyristor (SCR) control of buck and boost transformers in combination with filters to provide stable sinusoidal output even with nonlinear loads typical of computer systems. This is done in a smooth continuous manner, but at great speed, eliminating the steps inherent in the tap changer. Heavy loads can be delivered for start-up inrush typical of computer central processors or disc drive motors while maintaining full voltage.

e. Motor generators. Motor generators consist of an electric motor driving an AC generator so that the load is electrically isolated from the power line. Motor generators are used widely as a source of 400 Hz power for large computer central processors requiring this frequency. Because the frequency tolerance of the computers is wide, a simple induction motor can be used to drive a brushless synchronous generator (alternator). The speed changes with load and input voltage variations hold output frequency well within tolerance and constant voltage is maintained by automatic voltage regulators controlling the generator’s field excitation.

f. Uninterruptible power supplies (UPS). For continuous operation of computer or other sensitive systems when line voltage is interrupted, the only solution is a UPS. A properly designed UPS can provide computer quality power under essentially all normal and abnormal utility power conditions during outages for extended period of time depending on battery capacity. This bridges most power outages and permits orderly shutdown for longer

outages. UPS systems are typically solid-state without any rotating machinery. However, some designs incorporate motor generator sets in addition to solid-state circuitry and batteries to supply continuous power. These systems are commonly known as rotary UPS. A rotary UPS electrical output is usually more sinusoidal than a solid-state UPS and is less susceptible to distortion.

CHAPTER 8

GROUNDING

8-1. Ground maintenance.

The term grounding implies an intentional electrical connection to a reference conducting body, which may be earth (hence the term ground), but more generally consists of a specific array of interconnected electrical conductors. The resulting circuit is often referred to by several terms, such as: ground plane, ground grid, mat or ground system. Grounding systems should be serviced as needed to ensure continued compliance with electrical and safety codes, and to maintain overall reliability of the facility electrical system. Action must be initiated and continued to remove, or reduce to a minimum, the causes of recurrent problem areas. When possible, maintenance inspections should be performed at times which have the least affect on user activities. The complexity of ground systems and the degree of performance expected from such systems is growing all the time. Maintenance or shop personnel are encouraged to become familiar with Article 250 of the National Electrical Code (NEC), which deals with grounding requirements and practices.

8-2. Types of grounding systems.

Six (6) types of grounding systems will be described. They are static grounds, equipment grounds, system grounds, lightning grounds, electronic (including computer) grounds and maintenance safety grounds. All of these systems are installed similarly. However, their purposes are quite different. Some of the systems carry little or no current with no freed frequency. Others carry small to moderate currents at 50 or 60 Hz. Still others must be able to carry currents over a very broad range of frequencies in order to be considered effective. Most grounding system troubles are caused by one of two problems: 1) loss of effectiveness due to poor maintenance and, 2) inadequate ground system for the degree of performance expected.

a. Static grounds. A static ground is a connection made between a piece of equipment and the earth for the purpose of draining off static electricity charges before a spark-over potential is reached. The ground is applied for more than just the comfort of the equipment operator. The possibility of an explosion ignited by an electrical spark must be considered. Dry materials handling equipment, flammable liquids pumps and delivery equipment, plastic piping systems, and explosives storage areas all need static ground protection systems installed and functioning properly. Static ground systems are generally not called upon to conduct much current at any given frequency. Smaller gauge, bare conductors, or brushes with metallic or conductive bristles make up most parts of the static ground system.

b. Equipment grounds. An equipment ground pertains to the interconnection and connection to earth of all normally non-current carrying metal parts. This is done so the metal parts with which a person might come into contact are always at or near zero volts with respect to ground thereby protecting personnel from electric shock hazards. Equipment grounding consists of grounding all noncurrent-carrying metal frames, supports and enclosures of equipment. All these metallic parts must be interconnected and grounded by a conductor in such a way as to ensure a path of lowest impedance for the flow of ground fault current from any line to ground fault point to the terminal at the system's source. An equipment grounding conductor normally carries no current unless there is an insulation failure. In this case the fault current will flow back to the system source through the equipment grounding conductors to protect personnel from electrical shock. The equipment grounding conductor must never be connected to any other hot lines. Equipment grounding systems must be capable of carrying the maximum ground fault current expected without overheating or posing an explosion hazard. Equipment grounds may be called upon to conduct hundreds to thousands of amperes at the line frequency during abnormal conditions. The system must be sized and designed to keep the equipment surface voltages, developed during such abnormal conditions, very low. An example of this system is the bare copper wire (green conductor) connected to the frames of electric motors, breaker panels, outlet boxes, etc., see figure 6-1 for typical equipment grounding. Electrical supporting structures such as metal conduit, metal cable trays or metal enclosures should be electrically continuous and bonded to the protective grounding scheme. Continuous grounding conductors such as a metallic raceway or conduit or designated ground wires should always be in from the ground grid system to downstream distribution switchboards to ensure adequate grounding throughout the electrical distribution system. A typical grounding system for a building containing significant electrical equipment and related apparatus is shown in figure 8-2, The illustration shown depicts three most commonly en-

countered areas pertaining to the grounding. The grounding grid and grounding body (earth under the building) with the ground rods (electrodes and the water pipe system) are shown. The second part is the conductors associated with the equipment ground. Part of the equipment ground is also formed by the switchgear ground bus.

c. System grounds. A system ground refers to the condition of having one wire or point of an electrical circuit connected to earth. This connection point is usually made at the electrical neutral although not always. The purpose of a system ground is to protect the equipment. This ensures longer insulation life of motors, transformers and other system component A system ground also provides a low impedance path for fault currents improving ground fault relaying selectivity. In a properly grounded system the secondary neutral of a power transformer supplying a building or facility is connected to a transformer grounding electrode. The transformer neutral is a part of the service entrance point which bonds to the grounding electrode system of the building. According to the National Electrical Code (NEC) articles 250-81 and 250-83, metal underground waterpipes, metal building frames, encased electrodes, rods and plates are among the items that can make up the grounding electrode system of a building. The NEC article 250-S3 requires that the size of the grounding electrode iron or steel rod must be at least 5/8 inches in diameter and driven eight feet deep. The resistance of the electrode to ground cannot exceed 25 ohms (NEC 250-84). Otherwise a second electrode should be added and the distance between the two electrodes must be at least six feet. However, in some systems the 25 ohms resistance value cannot achieve the goals of grounding. They require ground resistance values below ten ohms. According to MIL-STD-l88-12A ten ohms ground resistance is acceptable. If the main building load is composed of computers or sensitive electronic equipment, the earth ground resistance should not exceed five ohms. There are many methods of system grounding used in industrial and commercial power systems, the major ones being ungrounded, solid grounding, and low and high resistance grounding (fig 8-3). Technically, there is no general acceptance to use any one particular method. Each type of system grounding has advantages and disadvantages. Factors which influence the choice of selection include voltage level of the power system, transient overvoltage possibilities, types of equipment on the system, cost of equipment, required continuity of service, quality of system operating personnel and safety consideration including fire hazards.

(1) *Ungrounded system. An* ungrounded system is one in which there is no intentional connection between the neutral or any phase and ground. Ungrounded system implies that the system is capacitively coupled to ground. The neutral potential of an ungrounded system under reasonably balanced load conditions will be close to ground potential because of the capacitance between each phase conductor and ground. When a line-to-ground fault occurs on an ungrounded system, the total ground fault current is relatively small, but the voltages to ground potential on the unfaulted phases will be high. If the fault is sustained, the normal line-to-neutral voltage on the unfaulted phases is increased to the system line-to-line voltage (i.e. square root of three (3) times the normal line-to-neutral value). This, over a period of time, breaks down the line-to-neutral insulation and hence results in insulation failure. Ungrounded system operation is not recommended because of the high probability of failures due to transient overvoltages caused by restriking ground faults. The remaining various grounding methods can be applied on system grounding protection depending on technical and economic factors. The one advantage of an ungrounded system that needs to be mentioned is that it generally can continue to operate under a single line-to-ground fault without an interruption of power to the loads.

(2) *Solidly grounded system.* A solidly grounded system is one in which the neutral (or occasionally one phase) is connected to ground without an intentional intervening impedance (fig 8-4). On a solidly grounded system in contrast to an ungrounded system, a ground fault on one phase will result in a large magnitude of ground current to flow but there will be no increase in voltage on the unfaulted phase. Solid grounding is commonly used in low voltage distribution systems. Solid grounding has the lowest initial cost of all Wounding methods. It is usually recommended for overhead distribution systems supplying transformers protected by primary fuses. However, it is not the preferred scheme for most industrial and commercial systems, again because of the severe damage potential of high magnitude ground fault currents. The NEC Article 250-5 (1990) requires that the following classes of systems be solidly grounded:

(a) Where the system can be so grounded that the maximum voltage to ground on the ungrounded conductors does not exceed 150 volts.

(b) Where the system is 3-phase, 4-wire, wye-connected in which the neutral is used as a circuit conductor.

(c) Where the system is 3-phase, 4-wire delta-connected in which the midpoint of one phase is used as a circuit conductor.

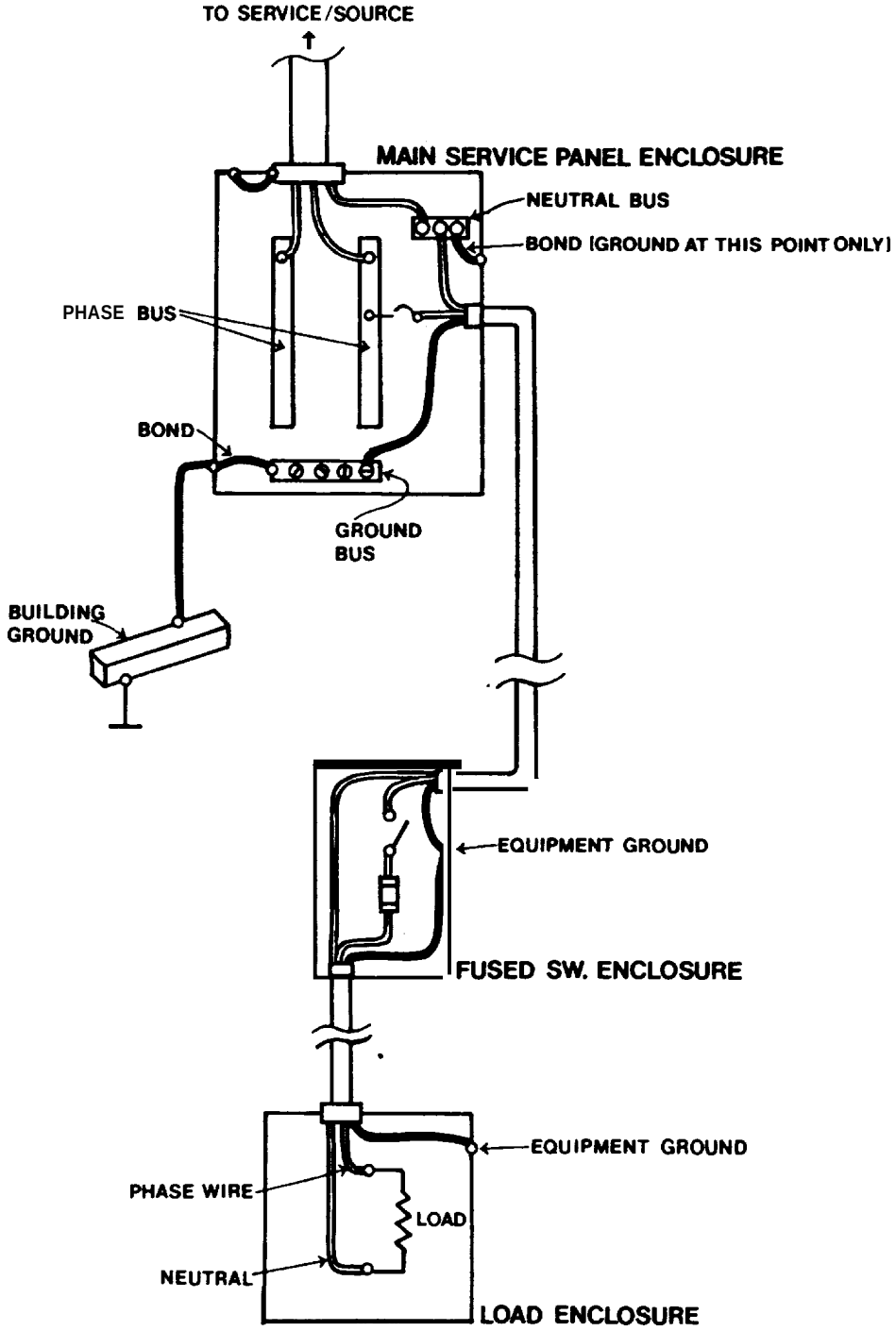

Figure 8-1. Typical Equipment Ground.

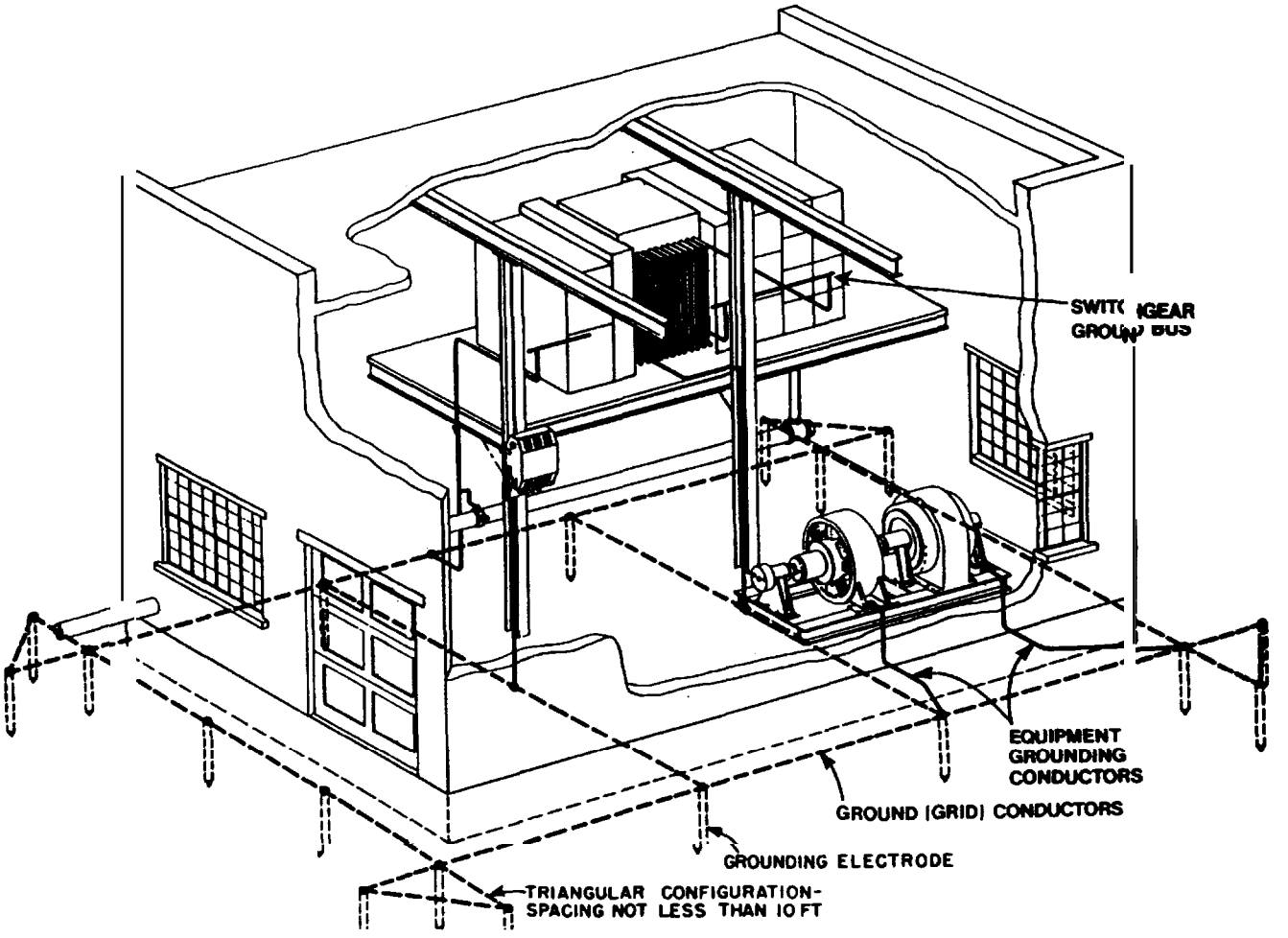

Figure 8-2. Typical grounding system for a building and its apparatus.

(d) Where a grounded service conductor is uninsulated in accordance with the NEC Exceptions to Sections 230-22, 230-30 and 230-41.

(3) *Resistance grounded system*. Limiting the available ground fault current by resistance grounding (fig 6-5) is an excellent way to reduce damage to equipment during ground fault conditions, and to eliminate personal hazards and electrical fire dangers. It also limits transient overvoltages during ground fault conditions. The resistor can limit the ground fault current to a desired level based on relaying needs. At the occurrence of a line-to-ground fault on a resistance grounded system, a voltage appears across the resistor which nearly equals the normal line-to-neutral voltage of the system. The resistor current is essentially equal to the current in the fault. Therefore, the current is practically equal to the line-to-neutral voltage divided by the number of ohms of resistance used. The grounding resistances are rated in terms of current and its duration for different voltage classes.

(a) Low resistance grounding. Low resistance grounding refers to a system in which the neutral is grounded through a small resistance that limits ground fault current magnitudes. The size of the grounding resistor is selected to detect and clear the faulted circuit. Low resistance grounding is not recommended on low-voltage systems. This is primarily because the limited available ground fault current is insufficient to positively operate series trip units and fuses. These trip units and fuses would be dependent upon both phase-to-phase and phase-to-ground fault protection on some or all of the distribution circuits. Low resistance grounding normally limits the ground fault currents to approximately 100-600A. The amount of current necessary for se-

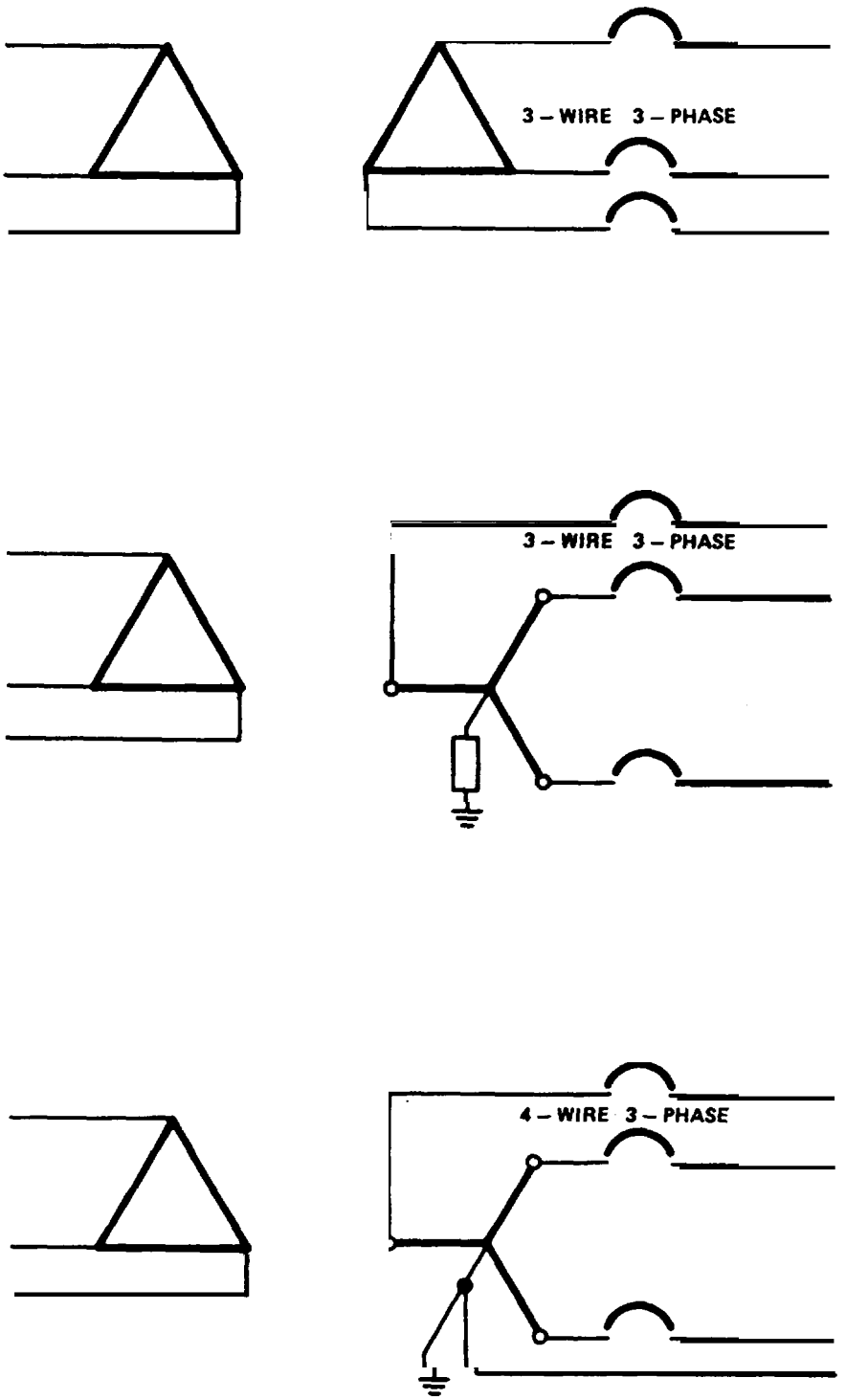

Figure 8–3. Methods of System Grounding: a) Ungrounded, b) High resistance grounded. 480/277V system with 45–50Ω resistor rated 1,800 watts continuously, c) Solidly grounded.

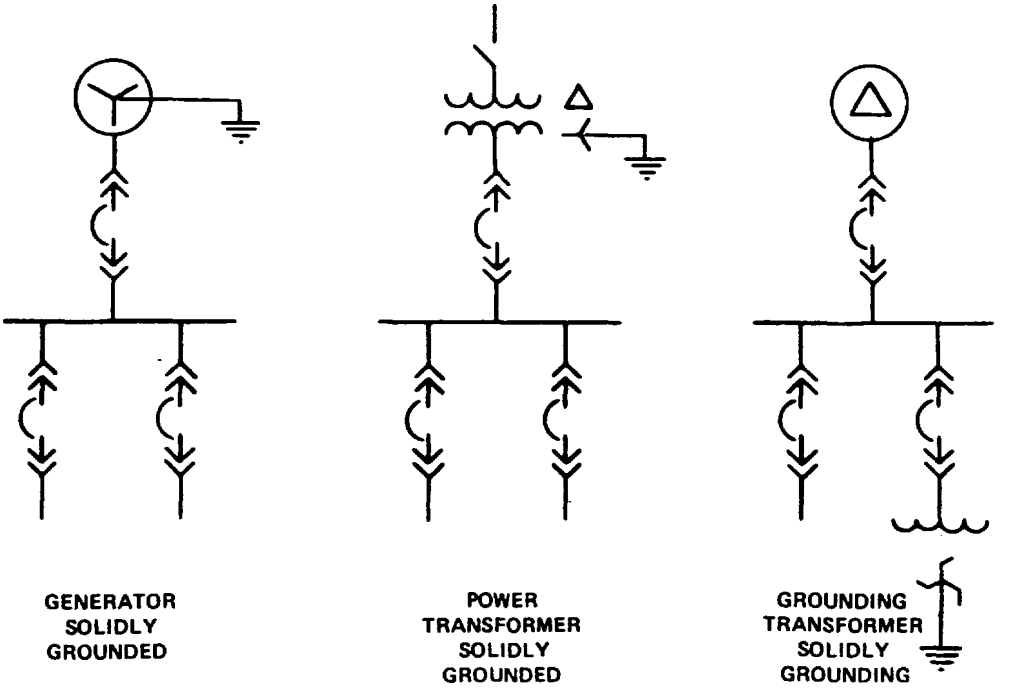

Figure 8-4. Methods of solidly grounding the neutral of three-phase systems.

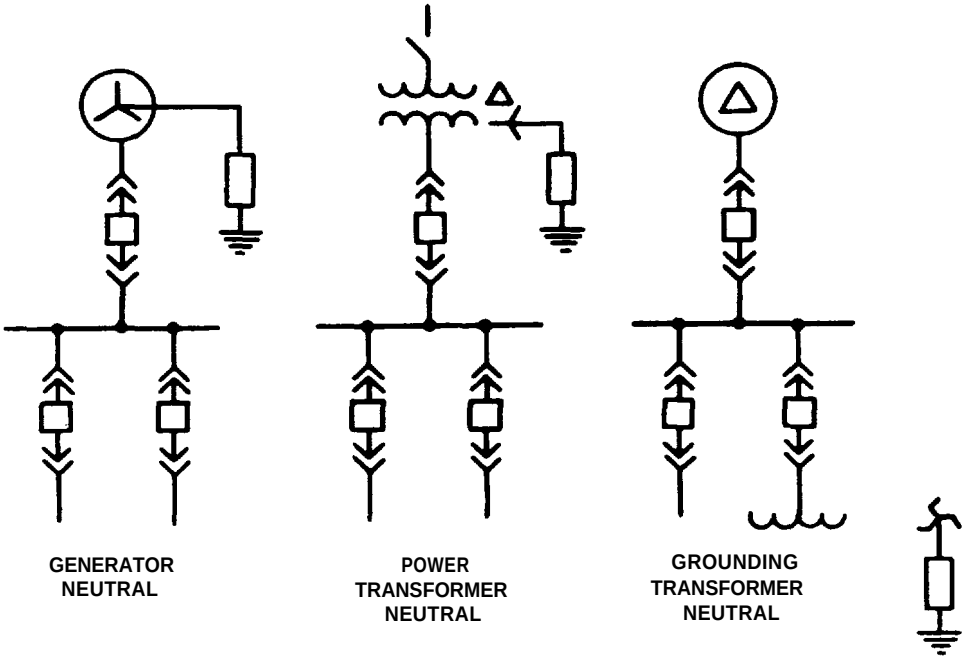

Figure 8-5. Methods of Resistance Grounding the Neutral of Three-Phase Systems: Left–High Res. 150–175Ω, 15A for 60 sec. on a 4160V system. three-phase, 3 W. Center—Low Res. 0.55Ω, 500A for 10 sec. on a 480V system, three-phase, 3W. Right—Derived neutral with grounding Resistor.

lective relaying determines the value of resistance to be used.

(b) High resistance grounding. High resistance grounding refers to a system in which the neutral is grounded through a predominantly resistive impedance whose resistance is selected to allow a ground fault current through the resistor equal to or slightly more than the capacitive charging current of the system. Because grounding through a high resistance entails having a physically large resistance that is both bulky and costly, high resistance grounding is not practical and is not recommended. However, high resistance grounding through a grounding transformer is cost effective and accomplishes the same objective. High resistance grounding accomplishes the advantage of ungrounded and solidly grounded systems and eliminates the disadvantages. It limits transient overvoltages resulting from a single phase-to-ground fault by limiting ground fault current to approximately 8A This amount of ground fault current is not enough to activate series overcurrent protective devices, hence no loss of power to downstream loads will occur during ground fault conditions. Special relaying must be used on a high resistance grounded system in order to sense that a ground fault has occurred. The fault should then be located and removed as soon as possible so that if another ground fault occurs on either of the two unfaulted phases, high magnitude ground fault currents and resulting equipment damage will not occur. High resistance grounding is normally applied in situations where it is essential to prevent unplanned system power outages, or previously the system has been operated ungrounded and no ground relaying has been installed. Once the ground point has been established through the resistor, it is easier to apply protective relays. The user may decide to add a ground overcurrent relay ANSI/IEEE device 50/51G. The relay maybe either current actuated using a current transformer or voltage actuated using a potential transformer. Depending on the priority of need, high resistance grounding can be designed to alarm only or provide direct tripping of generators off line in order to prevent fault escalation prior to fault locating and removal. High resistance grounding (arranged to alarm only) has proven to be a viable grounding mode for 600V systems with an inherent total system charging current to ground (31CO) of about 5.5A or less, resulting in a ground fault current of about 8A or less. This, however, should not be construed to mean that ground faults of a magnitude below this level will always allow the successful location and isolation before escalation occurs. Here, the quality and the responsiveness of the plant operators to locate and isolate a ground fault is of vital importance. To avoid high transient overvoltages, suppress harmonics and allow adequate relaying, the grounding transformer and resistor combination is selected to allow current to flow that equals or is greater than the capacitive changing current.

d. Lightning grounds. Lightning grounds are designed to safely dissipate lightning strokes into the earth. They are part of a lightning protection system which usually consists of air terminals (lightning rods), down conductors, arresters and other connectors of fittings required for a complete system. A lightning protection system's sole purpose is to protect a building, its occupants and contents from the thermal, mechanical and electrical effects of lightning. Effective grounding for lightning strokes is sometimes difficult to achieve because it is nearly impossible to predict the maximum discharge current. Currents from direct strikes can reach magnitudes of 100,000 amperes or more with frequencies of tens to hundreds of kilohertz. Fortunately, the event is very short, thus allowing most properly sized and maintained systems to survive the "hit".

(1) *Requirements.* Main lightning protection requirement is dependent upon the height of the building. According to NFPA 78-1986, there are two classifications for a building. Class I is a building with less than 75 feet height. The Class II building is higher than 75 feet or has a steel frame with any height. For further information about the lightning protection code see NFPA 78-1986 which contains more detail.

e. Electronic and computer grounds. Grounding for all electronic systems, including computers and computer networks, is a special case of the equipment ground and the system ground carefully applied. In fact, grounding systems for electronic equipment are generally the same as for system ground with an additional requirement: the degree of performance required. Electronic equipment grounding systems must not only provide a means of stabilizing input power system voltage levels, but also act as the zero voltage reference point. However, the need to do so is not restricted to a low frequency of a few hundred hertz. Grounding systems for modem electronic installations must be able to provide effective grounding and bonding functions well into the high frequency megahertz *range.* Effective grounding at 50-60 Hz may not be effective at alI for frequencies above 100 kilohertz.

(1) *Requirements.* There are several aspects to the requirement for good grounding performance for electronic equipment; all of which are due to electrical circuit behavior. Digital systems operate at high

frequencies. Modem systems achieve clock and data rates at 4 megahertz and higher. Clock rate is the rate at which a word or characters of a word (bits) are transferred from one internal computer element to another. Data rate is the rate at which data is transferred (bauds or bits per second) between computers. At these frequencies, due to the impedance, a regular ground wire acts as conductor for only a few feet. Compare the frequency and wavelength of these systems with those used for 60 Hz power. Electricity is conducted on a wire at very nearly the speed of light (186,000 miles/sec.). Dividing the speed by the frequency gives the full wavelength. For 60 Hz, one wavelength is about 3,100 miles. Communications and radar personnel know that interesting things begin to happen at one fourth of the wavelength. The voltage and the current no longer have the same relationship at this point on the wire. The quarter wavelength for 60 Hz is about 775 miles. However, the quarter wavelength for ten megahertz is only 24.5 feet. This is not the worst case; the change in the current and voltage relationship along a wire occurs gradually over the distance travelled. To maintain a close relationship between the voltage and current at all points along the conductor's path, it cannot be much longer than l/20th of a wavelength. Therefore, effective ground conductor length for a ten megahertz signal is only about 4.9 feet. This does not mean electronic grounding systems cannot be longer than four or five feet. The important conductor is the equipment grounding (bonding) conductor, which may be a copper cable, strap, sheet, or braid. It is this particular conductor which limits how far the electronic or computer equipment may be placed from the signal reference grid (equipotential plane) or system.

(2) *Noise interference.* Coupled and induced electrical noise is also a problem at higher frequencies. This effect is rarely a concern for systems operating at the 60 Hz powerline frequency. Very little, if any, current is induced or coupled to the ground conductors at low frequency. At high frequency, relatively more current is induced into the ground conductors through shields, cable trays, conduit, and the enclosures used to house the electronic system- As a result, these conductors must deal with more noise current than 60 Hz systems. In addition, they must hold the reference voltage very near zero at all points on the equipotential system.

(3) *Power system grounding. The* input power system ground resistance is important because it keeps the system voltage at nominal values. This "resistance" is not only a simple resistance measurement but also a frequency dependent impedance measurement. The best test instruments (para 14-5) actually apply an alternating current which returns a measurement of the conductors' inductance plus the grounding system's contact resistance. If the ground resistance reading is high at the low frequencies applied by test instrument, it will be much higher at the higher frequencies. The manufacturers of some electronic systems call for system grounding resistance of one ohm or less. This low resistance is many times more difficult to achieve than the 25 ohm maximum grounding resistance of a made electrode for power systems (NEC article 250-84). To put that in perspective; aircraft do not maintain an earth ground, but do maintain a low impedance between on-board electronic devices by using the aircraft skin and framework as a zero voltage equipotential plane.

(4) *Loop-flow.* A low resistance to ground in the input power system is no promise of trouble-free performance. It is necessary to understand that the earth is not a magic dumping area where unwanted signals and currents simply disappear. Currents always flow in complete circuit loops that may include various portions of the earth, the grounding electrodes, the grounding conductors, equipment bonds, and the equipment enclosures.

(5) *Isolated ground system.* Loop currents flowing through one portion of the earth into another usually include a substantial amount of induced high frequency common mode noise. Many designers have tried to solve the noise problem with a single point, isolated ground system. This system uses an insulated ground wire from the load to the service entrance panel board. All isolated ground outlets are of a special design such that the ground wire is isolated from the normal connections to the metal mounting frame and electrical outlet box. The isolated ground system is actually a very high impedance at high frequencies. This high impedance does attenuate this noise, but causes problems as high frequency voltages build up over its length, due to the high frequency current through the impedance of the conductor (IZ). Most manufacturers now include surge protection with their isolated ground receptacles to protect the equipment from the high voltages that develop at high frequencies across these types of receptacles (common and transverse mode). All exposed metal parts still require the equipment ground conductor. Therefore, two ground conductors are required: the equipment safety ("dirty") ground, and the isolated system ("clean") ground. All of the equipment grounds are routed and bonded in the normal way. All isolated ground conductors must be brought back to one point in the subpanel. The subpanel isolated ground bus must not be bonded to the subpanel enclosure. This ground bus must be isolated and only connected with insulated conductor(s) to the service

entrance ground bus. The input power system neutral must also be grounded only at the service entrance. The isolated ground system stops loop currents and common mode electrical noise, but has several major disadvantages: The long branch feeder and isolated ground conductors are effective only for low data transfer frequencies (fig 8-6c. High voltages occur between the conductors during surges. It is also a very difficult system to inspect and maintain. Frequency inspections must be made to ensure the system has not been defeated by inadvertent or deliberate installation of a jumper or conductor between the two systems. Inspections and tests on this type of grounding must be carried out after each electrical system modification. It is best not to use isolated ground systems at all unless forced to by the equipment manufacturers. It is also best to restrict such systems to small areas or only one floor of the building.

(6) *Electronic system grounding. Good* electronic system grounding performance is achieved with a properly laid out distribution of multipoint, well-bonded grounding connections. This system can use bare, braided, sheet, or stranded copper conductors for grounding or bonding functions. This system requires conduit and equipment enclosure bonding at all junction points. In other words, simple metallic contact between the enclosures, wiring conduits, and power panels is not enough. The multipoint bonding provides low impedance grounding for the electronic equipment. The low impedance between the separate items of electronic equip ment keeps the noise voltages at or near zero between them and, therefore, provides an "equipotential plane". This system is much easier to inspect and test. No special requirements must be met during modifications or expansion of the electrical system. All power panels and all supply transformers feeding an installation with this type of grounding system must be grouped and bonded together using short lengths of bare, braided, sheet, or stranded copper conductors in order to achieve the effective high frequency grounding performance described above. As shown in figure 8-6d, a single area of power entry with a large equipotential ground plane and short equipment grounding conductors forms the preferred grounding system for large automated data processing (ADP) and computer applications.

f. Maintenance safety grounds. Grounds used for maintenance work are usually intentional, but temporary, connections between equipment power conductors and ground. These connections are always applied after the power source has been turned off and the circuit(s) have been tested and are known to be de-energized. The ground is intended to protect maintenance personnel from an inadvertent re-energization of the circuit. The ground is removed tier maintenance operations have been completed. Application of a maintenance ground is discussed in more detail in paragraph 12-2d.

g. Ground system tests. Periodic testing should be done to assure grounding system effectiveness. The following are points that should be addressed during inspection and maintenance:

(1) Inspect and test single point, isolated ground systems after every electrical system modification. visually inspect outlets and panels for conductors forming loops between the equipment ground and the isolated ground.

(2) Test the ground to neutral voltage at each power distribution panel included in the particular system. The voltage should be taken using a high impedance AC voltmeter and an accurate record should be kept. The voltage should be very low; on the order of l0-150 millivolts (0.01-0.150V). Any sudden changes or increasing trends should be investigated and the cause corrected.

(3) The made electrode, rod, plate, or selected ground body contact point should be tested every 12-24 months. A record should be kept. Any increasing impedance indicates need for remedial action.

8-3. Ground fault interrupting methods.

Ground faults result when an electrical components insulation deteriorates allowing an above normal current leakage to ground. Minute current leakage may normally occur from virtually every electrical device. Ground faults become dangerous when an unintended ground return path becomes established. This ground return path could be through the normal electrical components and hardware (equipment ground for instance), conductive material other than the system ground (metal, water, plumbing, pipes, etc.), a person or, any combination of the above. Ground fault leakage currents of much lower levels than is needed to trip conventional circuit breakers can be hazardous. Therefore, to reduce the possibility of fire, injury, or fatality, the NEC requires additional ground fault protection for certain types of circuits. Ground fault protective devices are of two distinct types: ground fault circuit interrupters and ground fault protectors. It is extremely important to understand the difference between them.

a. Ground fault circuit interrupters (GFI). A GFI is designed to protect a person from electrocution when contact between a live part of the protected circuit and ground causes current to flow through a person's body. A GFI will disconnect the circuit when a current equal to or higher than the calibration point (4 to 6 mA) flows from the protected

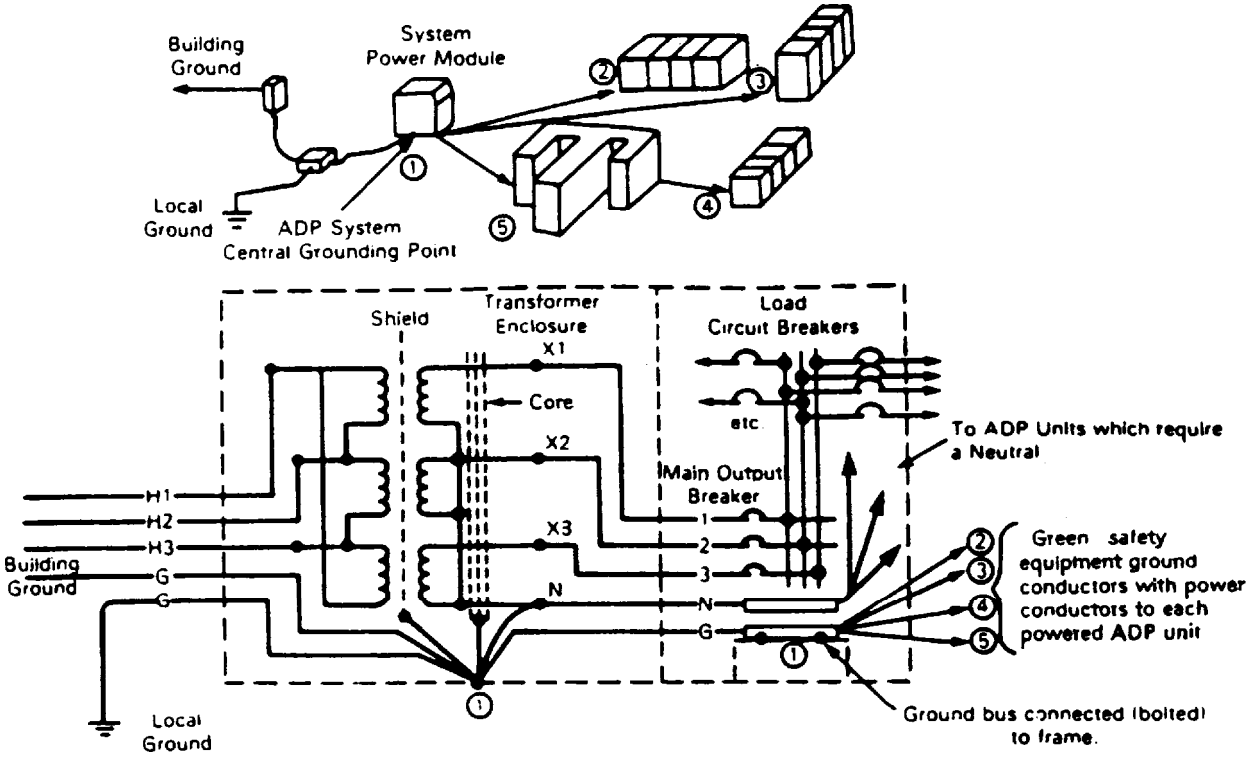

a.

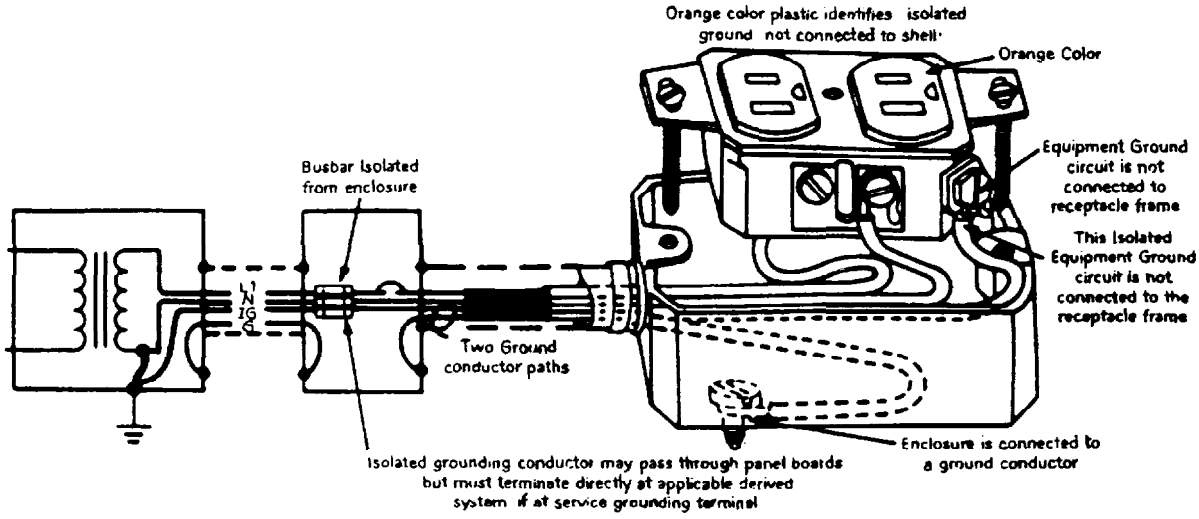

b.

Figure 8-6. Grounding for Electronic and ADP Systems: a) Establish a central grounding point, b) Principal features of an isolated grounding system.

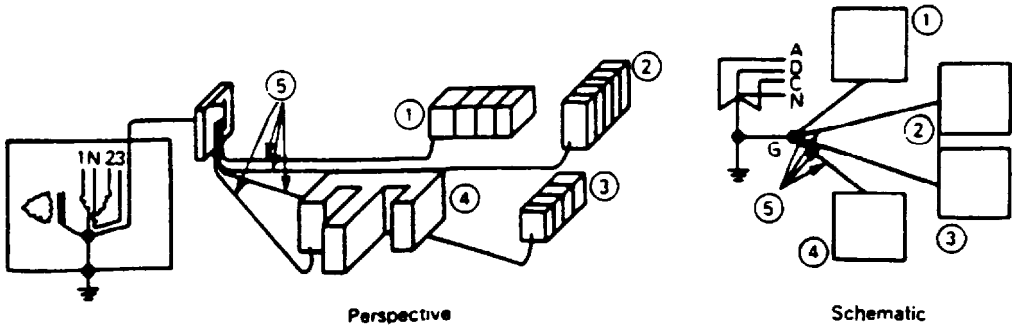

Computer Conductors Subject to High Frequency Resonance with RF Signals

c.

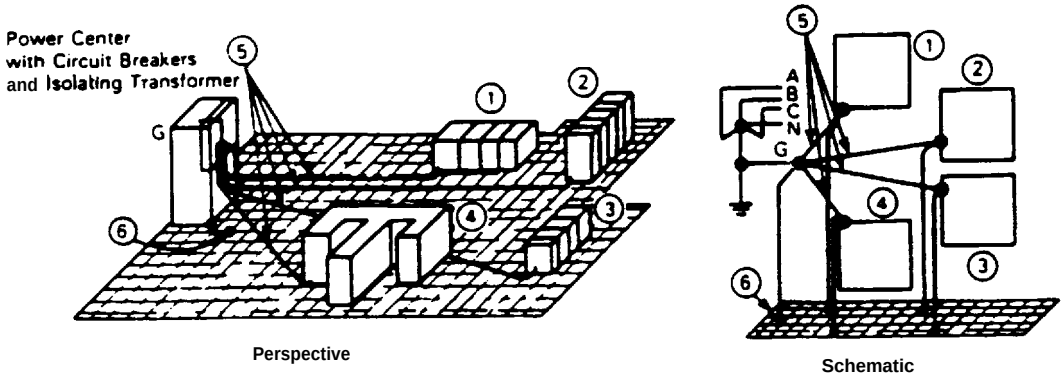

Computer Units Connected to Signal Reference Grid and to A-C Ground

(1) through (4) are typical computer system modules

(5) is the "Green Wire" safety equipment ground conductor

(6) is safety ground for raised floor structure

d.

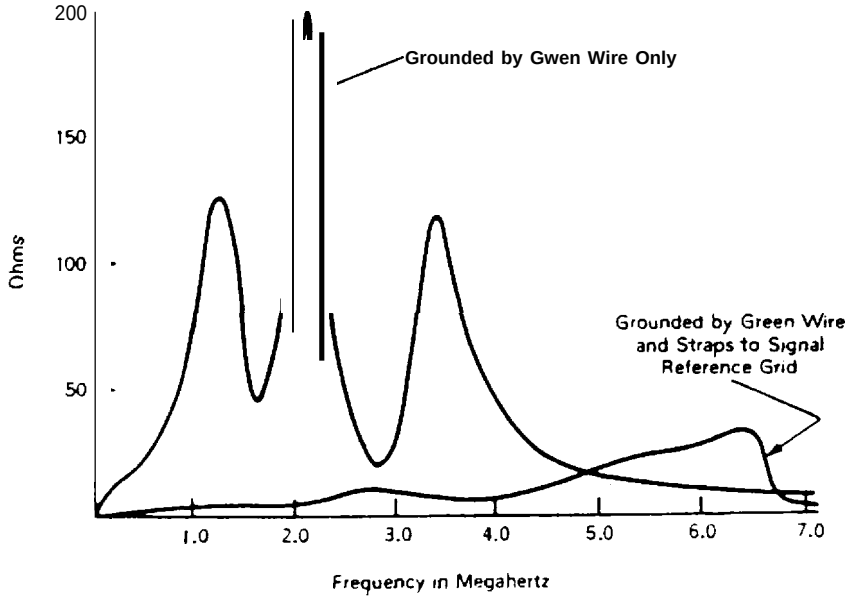

e.

Figure 8-6. (Continued) Grounding for Electronic and ADP Systems: c) Avoid long runs of single grounding conductors, d) An effective multi-point grounding system for high frequencies, e) Comparison of single conductors us a multi-point grid at high frequencies.

circuit to ground (fig 8-6). It will not eliminate the shock sensation since the normal perception level is approximately 0.5 mA. It will not protect from electrocution upon line-to-line contact since the nature of line-to-line loads cannot be distinguished by a line-to-ground device. GFIs are sealed at the factory, and maintenance should be limited to that recommended by the manufacturer. Tripping tests should be performed with the test button on the unit in accordance with the frequency recommended by the manufacturer. Results and dates of tests should be recorded on the test record label or card supplied with each permanently installed GFI unit. There are four types of GFIs. There are circuit breaker type, receptacle type, portable type, and permanently mounted type.

(1) Circuit breaker type. A circuit breaker type GFI is designed in the form of a small circuit breaker and is completely self-contained within the unit housing. The circuit breaker type GFI provides overload and short-circuit protection for the circuit conductors in addition to ground-fault protection for personnel. It is intended to be mounted in a panelboard or other enclosure. For required maintenance refer to paragraph 5-4c.

(2) *Receptable type.* A receptacle type GFI is designed in the form of a standard receptacle that is completely self-contained within the unit housing, and does not provide overload or short-circuit protection. It is intended for permanent installation in conventional device outlet boxes or other suitable enclosures. Maintenance required for a GFI receptacle is the same as any standard receptacle outlet. If the GFI receptacle does not reset, is badly worn, cracked, or broken, or if contacts are exposed, the GFI must be replaced. It should also be replaced if accidental disengagement of a plug from the receptacle is a recurring problem. Proper wire connections on the receptacle and proper polarity of power connections should be checked including the integrity of the equipment ground. If there is abnormal heating on the GFI receptacle face, check for loose terminal connections and correct or replace. If there is evidence of burning or arc-tracking, it should be replaced.

(3) *Portable type.* A portable type GFI is a unit intended to be easily transported and plugged into any grounded receptacle outlet. Cords, tools or other devices to be provided with ground-fault protection for personnel are then plugged into receptacles mounted in the unit. Required maintenance would include that recommended in paragraph (2) above for receptacle type GFIs along with the following cord care recommendations:

(a) Keep the cord free of oil, grease and other material that may ruin the rubber cover. Avoid tangling knots or dragging across sharp surfaces.

(b) Make sure that the power tool is grounded through the additional grounding conductor in the cord and the grounding prong of the plug. The integrity of this ground circuit is necessary for the Protection of personnel.

(c) Make sure that the cord is not cut, broken, spliced or frayed. Cords maybe replaced or the damaged portion may be cut out and the two sections rejoined by attaching a plug and connector.

(d) Make sure that the green conductor is connected to the frame of the tool and the grounding prong of the attachment plug.

(4) *Permanent type. A* permanently mounted type GFI is a self-contained, enclosed unit designed to be wall or pole mounted and permanently wired into the circuit to be protected. Maintenance beyond tightening of connections and cleaning should not be attempted. Any repairs needed should be referred to the manufacturer.

b. Ground fault protectors (GFP). A GFP is designed to limit damage to electrical equipment in the event of a fault (either solid or arcing) between a live part of the protected circuit and ground. A GFP will cause the circuit to be disconnected when a current equal to or higher than its setting flows to ground (fig 8-7). GFPs are available with settings typically ranging from five to 1200 amperes. It will not protect personnel from electrocution. A GFP system is designed to be installed in a grounded distribution system. It consists of three main components: sensors; relay or control unit; and a tripping means for the disconnect device controlling the protected circuit. Detection of ground-fault current is done by either of two basic methods. With one method, ground current is detected by sensing current flow in the grounding conductor. With the other method, all conductor currents are monitored by either a single large sensor, or several smaller ones. Sensors are generally a type of current transformer and are installed on the circuit conductors. The relay or control unit maybe mounted remotely from the sensors or maybe integral with the sensor assembly. Circuit breakers with electronic trip units may have a GFP system integral with the circuit breaker. Any maintenance work performed on the electronic circuitry should adhere to manufacturer's instructions. Maintenance on the mechanical operating mechanism components should be performed as recommended in chapter 5. Maintenance requirements for the sensors are as specified in chapter 2 for instrument transformers. Tighten all terminal connections and clean. Any repairs needed should be performed by the manufacturer. If interconnections between components are disconnected, they must be marked and replaced to maintain the proper phasing and circuitry. If the system is

equipped with a test panel, a formal program of periodic testing should be established. When the system is not equipped with a test panel, refer to the manufacturer for test instructions.

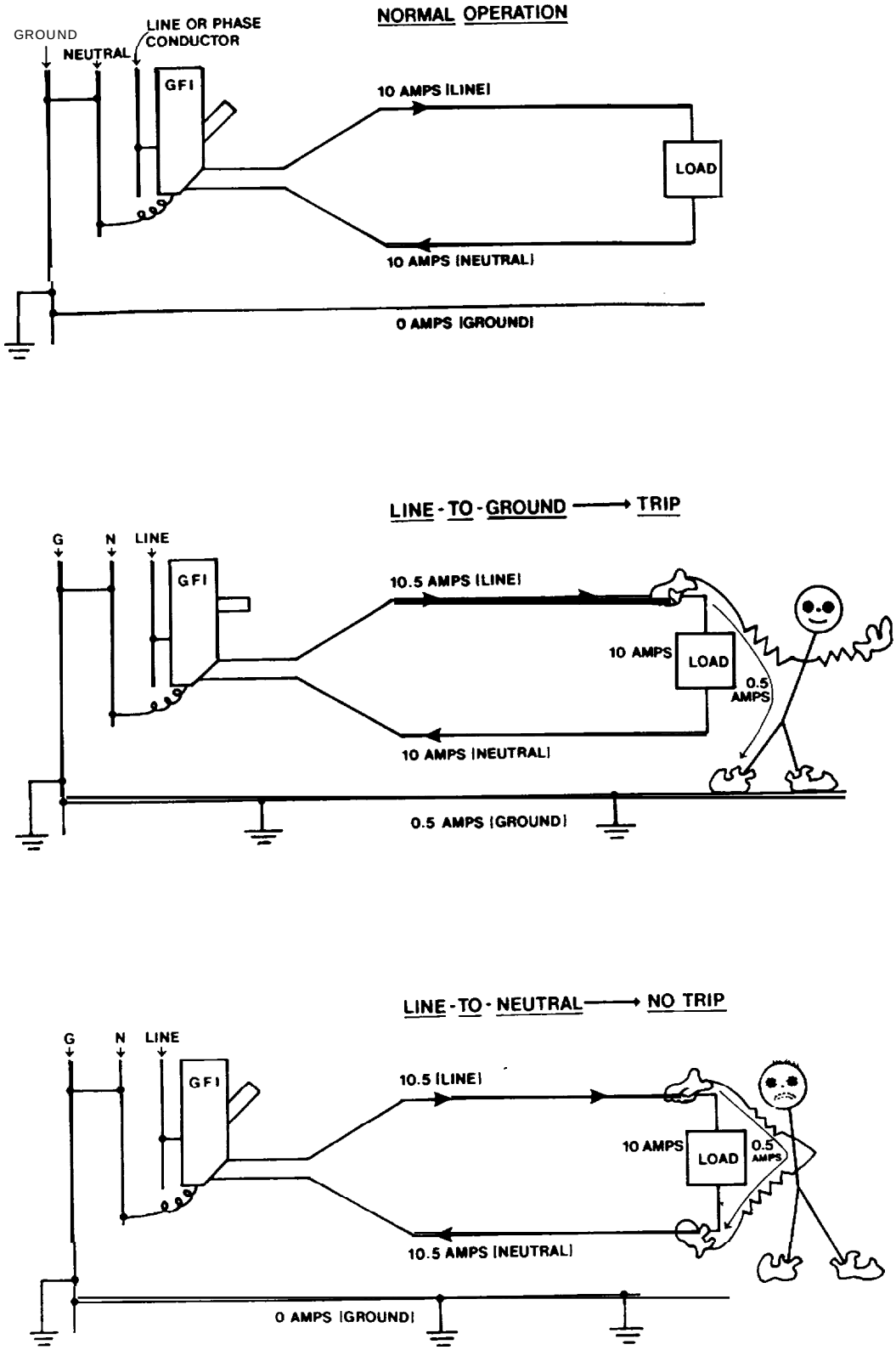

Figure 8-7. Ground fault circuit interrupter operation.

CHAPTER 9

ILLUMINATION

9-1. Lighting maintenance.

Each lighting installation is designed to produce a specific level of illumination adequate for those working in the area. Adequate illumination should be maintained to reduce eyestrain, improve morale, increase safety, improve housekeeping, decrease fatigue, reduce headaches and increase production, all of which are directly reflected in lower operating cost. The maintenance of lighting systems is aimed at preserving the light producing capability at the original design level. Its necessity cannot be overemphasized. To prevent progressive deterioration of the system, prompt repair of any deficiency is essential. Since dirt accumulating and lamp aging are the two major factors which reduce the light output, it is necessary that lamps, fixtures and reflective areas be kept clean; defective lamps be replaced; and the voltage be held stable.

9-2. Fluorescent lighting.

There are three principal types of fluorescent fixtures; preheat, instant-start and rapid-start. All have practically the same physical dimensions but different internal construction. A preheat fixture has a ballast and starter which supplies nominal voltage to the lamp (fig 9-l). These are older style fixtures which cause the fluorescent tube to flicker before it lights. An instant-start fixture has a ballast which supplies a high voltage to the fluorescent tube to light it instantly. A rapid-start fixture has a ballast which requires a starting aid voltage between the full length of the lamp and the grounded metal surface of the fluorescent fixture. The type of circuit in which a particular lamp must be used is etched on the end of the lamp. For most applications, the 4-foot rapid-start lamp is the preferred lamp. Energy efficient lamps and electronic ballasts are also available. They can replace standard fluorescent lamps and save electricity by providing full-light output at reduced wattage and operating temperatures. Electronic ballasts can save up to 25 percent of the energy. The advantages of the electronic ballast besides energy saving, are lighter weight, less humming noise, dimmable and capable of operating up to four lamps at a time. The National Electrical Code Article 410-73 requires that all indoor fluorescent fixtures (except those with simple reactance ballasts) incorporate Class p ballasts with integral thermal protection. This requirement applies to all new installations and replacements. Older models with simple (single winding) reactance ballasts are an exception. The NEC Article 410-18(a) also requires that fluorescent fixtures as well as all other lighting fixtures and equipment with exposed conductive parts be grounded. Failure to properly ground the ballast and fixture combination could result in shock hazard. In addition to a shock hazard, failure to properly ground a fixture may result in frequent tube failures and trouble with starting for certain designs. For relamping or lighting retrofit it is important to assure existing ballast is in compliance with the new lamp. For example, when replacing a T-12 with a T-8 lamp the new ballast for the T-8 should be installed since the existing T-12 ballast is incompatible although the lamp bases are similar.

9-3. Incandescent lighting.

In an incandescent lamp, light is generated by heating the filament to incandescence. The hotter the filament, the more efficient it is in converting electricity to light. However, when the filament operates hotter, its life is shortened. Therefore the design of each lamp is a balance between efficiency and life. Incandescent lighting fixtures are designed for a particular lamp size and type. However, it is possible to use much higher wattage lamps in a fixture than the fixture or the circuit can adequately handle. The excessive heat of higher wattage lamps can damage the sockets, increase failure rates and overload the circuits. Personnel are cautioned to use only the lamp size (in watts) recommended for the fixture or smaller rather than a higher wattage lamp that may physically fit. Incandescent lamps come in a variety of voltage ratings. For most applications, the lamp voltage rating nearest the available line voltage should be selected. Under this condition, the lamp will produce its rated value of life, watts and light output. Energy efficient replacements are available for standard incandescent lamps. They provide better lamp efficiency with no loss in lamp life. Many incandescent lamps are available with life ratings in excess of ordinary general service lamps. Some have ratings of 5,000 hours or more and some even are guaranteed to burn for five years. Use of these lamps may be practical at locations where access is limited including high ceiling auditoriums, exit lights, stairwells, and marker lights on towers or fire alarm boxes. Use of an ordinary general service lamp whose voltage rating is higher than the circuit volt-

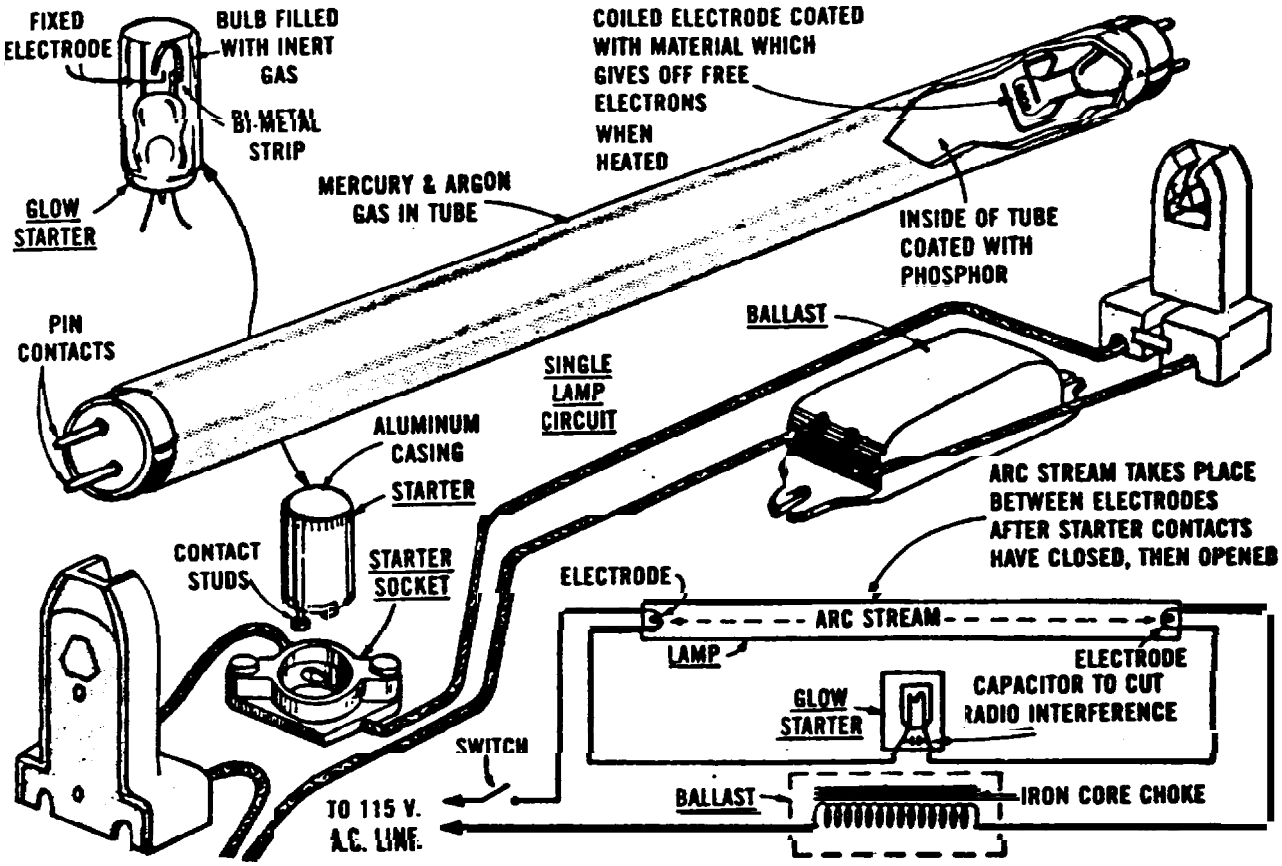

Figure 9-1. Preheat fluorescent lamp and fixture components.

age may be another alternative for inaccessible locations. By operating the lamp below its rated voltage, the life is increased but the light output is sacrificed.

9-4. High intensity discharge lighting (HID).

High intensity discharge lamps are those which have a gaseous discharge arc tube operating at pressures and current densities sufficient to generate desired quantities of visible radiation within their arcs alone. Every HID light source-mercury, metal halide, or high or low pressure sodium requires a ballast. Without a ballast, the lamp will not work; the arc will act as a short circuit and the lamp will destroy itself. Not only is a ballast necessary for lamp operation, but a properly matched ballast is essential to achieve rated life and performance with any HID lamp. Therefore, all ballasts should be designed to match the supply voltage with lamp requirements, to start the lamp and to control its performance throughout its life according to data published by the lamp manufacturer. Ballast designs differ widely between mercury, metal halide, HPS and LPS light sources and are therefore not interchangeable.

a. Mercury lamps. The maintained light output of mercury lamps is high because the electrodes operate at a relatively cool temperature resulting in less oxide contamination of the operating electrodes and the discharge gas. Long average life (24,000 hours or more) is a primary characteristic of most mercury lamps. While some models may have lamp bases the same size as incandescent lamps, standard mercury lamps must never be used to replace a burned out incandescent lamp (fig 9-2). However, there are self-ballasted mercury lamps which can be used as direct replacements for incandescent lamps. The installer should check which type is compatible with the fixture before turning on the power. An objectionable characteristic of mercury lamps is the time required to reignite (several minutes) after a momentary loss of power. It should be noted that this lamp can cause serious skin burn or eye inflammation from ultraviolet radiation if the outer envelope of the lamp is broken or punctured, and the arc tube continues to operate. Lamps allowed to operate in this way constitute both a fire and a personnel safety hazard and should be replaced promptly. There are certain lamps available that will automatically extinguish when the outer envelope is broken.

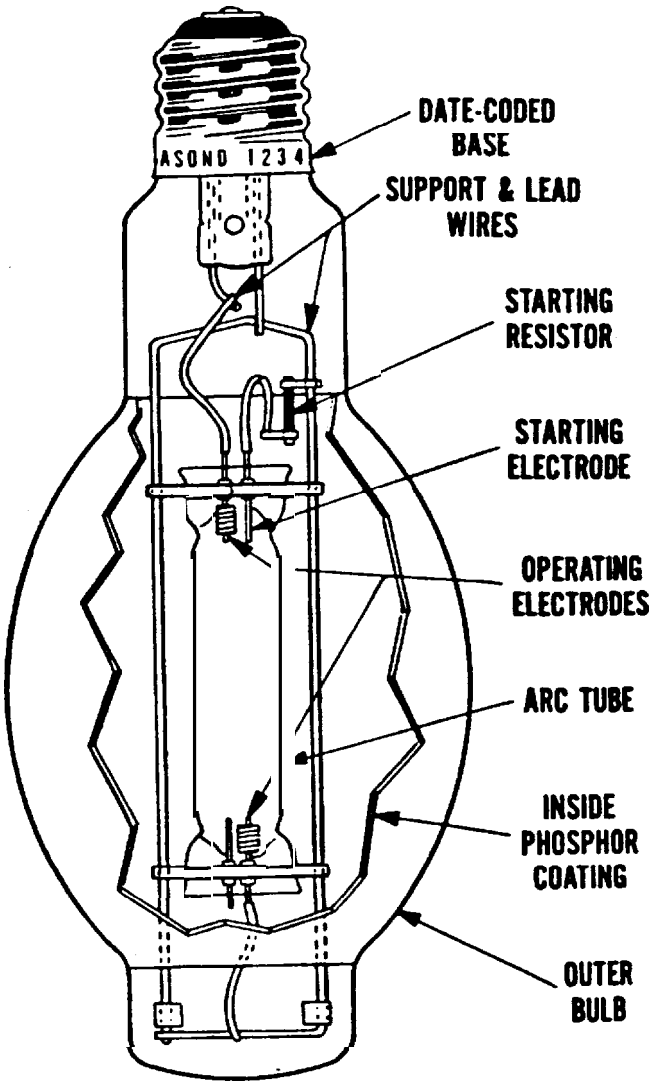

Figure 9-2. Mercury lamp.

b. Metal halide lamps. Metal halide lamps resemble mercury lamps in appearance and are used similarly. The color produced is better than mercury lamps and control of the light is easier. The initial efficiency is also better for wattages above 150W. Otherwise mercury lighting is more efficient. Disadvantages of metal halide lamps are a higher cost, and a shorter life expectancy than mercury lamps.

c. *High pressure sodium (HPS) lamps.* The HPS lamp package is similar to the mercury vapor lamp. Like most discharge lamps, the operating voltage is not compatible with supply voltage and a current limiting ballast must be used. The HPS ballast must compensate for both variations in line voltage and lamp voltage change due to ageing process in the tube. The mercury lamp operating voltage changes very little with life. With the HPS lamp, the ballast must compensate for changes in the lamp voltage as well as for changes in the line voltage. The operating voltage of an HPS lamp can change as much as 60 percent as it ages and the ballast operating characteristics throughout the life of the lamp is the key to good system performance. High pressure sodium. is more efficient than mercury or metal halide lamps.

d. Low pressure sodium (LPS) lamps. The LPS lamps are physically and electrically similar to fluo rescent lamps but without the phosphor coating. A ballast is required to start the LPS lamp. There is about a 10-minute warm-up period when the lamp is first turned on. LPS lamps are larger than mercury, metal halide and HPS lamps. The largest LPS lamp is 180 watts, 44 inches long and emits 33,000 lumens of yellow (monochromatic) light compared to a 400-watt HPS lamp 10 inches long which emits 50,000 lumens. There are about 1000 milligrams of sodium in the 180-watt LPS lamp compared to 6 milligrams of sodium in the 400-watt HPS lamp. Because of this, LPS lamps require special disposal precautions that do not apply to HPS lamps. Applications for LPS lamps are limited to roadways or floodlighting where color rendition is not important.

(1) *Installation.* A suitable ballast must be used. The ballast must be in compliance with Illuminating Engineer Society (IES) and/or ANSI specifications- If using power factor correction in a star connected multi-phase distribution, the power factor correcting capacitor should be connected between the line and neutral. A filter coil must be used if there is audio-frequency switching signals on the mains. The lamp should be installed within the indicated limits to avoid accumulation of sodium in the arc tube. Accumulation of sodium could reduce lamp life. Lamps of 90 watts or more must be set within 20 degrees of horizontal. Lamps of 55 watts or less may operate up to 20 degrees above horizontal.

(2) *Maintenance.* Do not allow the lamp to be scratched. Ensure that power is off before installing or removing the bulb. To avoid electric shock do not touch any metal parts of a broken bulb. A great degree of heat is produced by contact of the sodium with a small amount of water. Therefore the lamps must be stored or carried in their original container.

(3) *Disposal.* Let the lamp cool before removal. To avoid the danger of fire or broken glass, care must be taken in handling discarded lamps. No more than 20 lamps at one time should be broken into small pieces in a dry container of adequate size and in an open area. To avoid injury from flying glass, goggles should be worn. The broken pieces should be sprayed with water from a distance. When the chemical reaction has ceased the sodium is harmless and the broken glass should be disposed of as normal waste.

9-5. Cleaning.

The cleaning schedule should be coupled with relamping (spot/group schedule to minimize labor costs). The cost of cleaning versus replacement should be carefully evaluated. It is well-known that dirt absorbs and masks light. The progressive decrease of light caused by accumulating dirt renders periodic cleaning of lighting equipment-lamps, reflectors and lens--a necessity. The frequency of cleaning depends entirely upon local conditions. Fixtures in air-conditioned and air-filtered rooms may require cleaning only once a year. But in an atmosphere which is heavy with dust and fumes, cleaning every few weeks may be necessary. The cleaning intervals for a particular installation should be determined by light meter readings after the initial cleaning. When subsequent foot-candle readings have dropped 15-20 percent, the fixtures should be cleaned again. Readings should be made with the light meter at the working surface with the meter reader in the position of the operator or person using the working surface. Lighting equipment should be washed, not just wiped with a dry cloth. Washing reclaims five to ten percent more light then dry wiping and reduces the possibility of marring or scratching the reflecting surfaces of the fixtures. Glassware, reflectors and diffusing louvers that can be removed should be cleaned as follows:

a. Immerse in the washing solution. Do not immerse lamp base or electrical connections in the cleaning solution. Scrub with a soft brush or sponge. When incrustation is not removed by scrubbing, use No. 0 steel wool to remove dirt film.

b. Rinse in warm clear water and dry with a clean cloth. Walls, ceilings and surroundings are an important part of the overall illumination system since they redirect light to the working area. The most efficient lighting system is obtained when the fixtures are new and when the walls, ceilings, floors and furnishings of the room are clean and colored with a high reflectance color. A lighting maintenance program must therefore include cleaning and painting of the walls and ceilings in addition to the fixture cleaning schedule. Glassware, reflectors and diffusing louvers that cannot be removed should be cleaned as follows:

(1) *Wipe with a moist cloth or sponge.* When incrustation is not removed by sponging, use No. 0 steel wool to remove dirt film. Care should be taken to ensure that shreds of steel wool do not touch the pin contacts or get into the lamp socket.

(2) *Wipe off excess moisture with a clean cloth.* Clean fixture holders and stem hangers with a moist sponge or cloth and wipe dry. Enameled, chrome, aluminum or silver-plated reflecting surfaces that cannot be adequately cleaned and polished should be replaced.

9-6. Relamping.

The longer a lamp remains in service, the less light it produces. The different types of lamps-filament, fluorescent or high intensity discharge-depreciate at different rates. Since their life expectancy is also different, replacement intervals will vary. The two general relamping procedures are spot relamping and group relamping.

a. Spot relamping. Spot relamping is the replacement of individual lamps as they fail. Lamps that are blackened or discolored should also be replaced even if they are still burning because this discoloration indicates that the lamp will soon fail. Fluorescent lamps should be replaced as soon as they begin to flicker, or when the ends of the tube adjacent to the base blacken (fig 9-3).

b. Group relamping. Group relamping is most applicable to fluorescent lighting. When relamping, it is economical to wash the fixtures. It is also advantageous to inspect the sockets, hangers, reflectors and lens for broken glass, loose mountings, etc. Refer to the lamp manufacturer for recommended replacement intervals and relamping procedures. It should also be noted that replacement lamps must be of the same type, color, wattage and voltage as those being replaced. The following procedures apply:

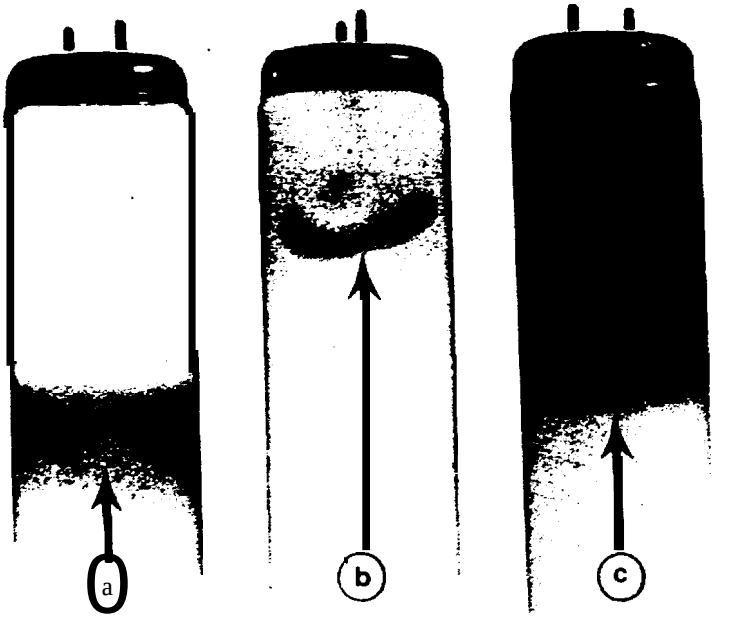

Figure 9-3. Trouble-Shooting Fluorescent Lighting: a) Grey or brown bands 1"—2" from base are normal and do not affect useful life, b) Dark spots caused by condensed Mercury. Usually disappear after lamp warms up, c) Large blackened areas at ends mean lamp is at end of useful life.

(1) Plan to replace all fluorescent lamps in a given area upon completion of 80 percent of rated burning life. Keep records of dates, costs, and other pertinent information as necessary to determine the realized savings.

(2) While the existing lamps are lighted, pick the best 20 percent of old lamps and save for replacement stock. Choose only the brightest and cleanest lamps for this purpose. Discard the remainder. Install new lamps in all sockets. Use the replacement stack to replace the first 20 percent of individual lamps as they burn out. When all of the replacement lamps have been used, make another complete replacement of lamps and repeat the process.

9-7. Lamp trouble-shooting.

Light sources operate most efficiently and economically at their rated voltages. Operation outside their normal operating range is undesirable. Both undervoltage and overvoltage conditions have detrimental effects on the life, efficiency, and economy of the light sources. These effects are as follows:

a. For fluorescent lamps, line voltage greater than the maximum ballast range will shorten lamp and ballast life. Line voltage less than the minimum ballast range will also shorten lamp life, reduce illumination and may cause uncertain starting. Frequent starting will shorten lamp life.

b. For incandescent lamps, line voltage greater than the maximum lamp range will increase the light output but will shorten the lamp life. Line voltage less than the minimum lamp range will extend lamp life but will reduce light output by approximately three percent for each one percent drop in voltage.

c. For HID lamps, line voltage greater than the maximum ballast range will shorten lamp and ballast life. Line voltage less than the minimum ballast range will reduce light output and may cause uncertain starting.

d. With the more common lamps and circuits, continuous flashing or blinking will destroy the starter, shorten lamp life and possibly damage the ballast. Whenever possible, replacement ballasts should be of the "P"-rated type that have internal temperature sensitive overload protection. This is not always possible as "P" ballasts may not operate satisfactorily in equipment that is otherwise satisfactory. Original type ballasts should be used if available. Replacement ballasts should be of the type having an overload circuit opening device. Other more common troubles encountered with lamp equipment, the probable causes and the suggested solutions are listed in table 9-1.

Table 9-1. Lamp Trouble-Shooting Guide.

TROUBLE	PROBABLE CAUSE	REMEDY
Fluorescent Lamp Equipment		
Lamp fails to start or flashes on and off .	Lamp pins not contacting.	Seat lamp firmly and correctly.
	Starter defective	Replace with tested starter
	Low line voltage	Match lamp rating to line voltage or increase line voltage
	Fault in circuit of luminaire	Check wiring and lamp holders. Check ballast
	Low temperature of surrounding air	Shield lamp from drafts. Enclose lamp to conserve heat. Maintain voltages within the rated voltage range of the lamp. Use thermal-type starters.
	Poor ground on rapid start ballast	Ground the fixture
	Lamp at end of life	Replace with tested lamp
Lamp flickers, swirls, or flutters.	Cold or too rapid starting	Allow a new lamp to operate a few hours for seasoning. Turn off a few moments - then turn on. Change lamps and, if flicker remains, replace starter.
End of map glow	Poor ballast	Check ballast
	Faulty starter	Replace starter
	Improper wiring or ground	Check wiring and ballast for ground
Lamp darkens early in life	Improper starting	Replace starter
	Low line voltage	Increase voltage
	Poor lampholder contact	Seat lamp firmly in lampholder. Check ballast and wiring

Table 9-1. Lamp Trouble-Shooting Guide-Continued.

TROUBLE	PROBABLE CAUSE	REMEDY
Fluorescent Lamp Equipment		
Short lamp life	Low or high line voltage	Maintain branch circuit voltage within the range specified on ballasts
	Lamp turned on and off	Frequency of starting affects lamp life. Long periods of burning give long life. Short periods of burning reduce lamp life
Radio interference	Not installed properly	Auxiliary equipment should be enclosed in a steel channel. Wiring should be made up with tight connection; clamps and starters should be firmly installed in sockets and fixture grounded
	Line feedback	Install filter at radio
	Radiation direct from lamp	Locate radio antenna system at least 10 ft. from fixtures
Noise from ballast	Fluorescent equipment is not noiseless type	If unit is particularly noisy, replace ballast

Table 9-1. Lamp Trouble-Shooting --continued.

Lamp fai1s to start	Lamp loose	Tighten in socket
	Low voltage	Increase lamp voltage by changing transformer tap
	Wiring fault	Check wiring. Tighten connections
	Low temperature	Lamps may not start when temperature is below 32° F
	Fluctuating voltage	Check line voltage. (Momentary dips of 10 percent, or more, often cause lights to go out).
Lamp frequently goes out	Lamp burned out	Replace
	Wiring fault	Tighten connections. Check wiring. Separate lighting circuits from heavy power circuits
Annoying stroboscopic effect	Cyclic flicker	Where there is a 3-phase supply, connect luminaries on alternate phases. On single phase, add incandescent luminaries to the system

Table 9-1. Lamp Trouble-Shooting Guide-Continued.

Lamp not burning	Lamp loose	Tighten in socket
	Loose or broken connections	Secure terminals. Repair wiring
	Lamp burned out	Replace with new lamp
Lamp burns dimly	Low voltage	Match lamp rating to line voltage or increase line voltage
Short lamp life	High voltage	Match lamp rating to line voltage. Improve voltage regulation and avoid surges
	Lamp failure due to mechanical shock	Replace lamp. Be sure water does not drip on bulb. Use rough service lamps if required
	Incorrect lamp	Replace with lamp of size for which luminaire is rated
	Excessive vibration	Use vibration or rough service lamps
Lamp breakage	Water contacts bulb	Use enclosed vapor-tight luminaire if exposed to moisture
	Bulb touches luminaire	Use correct lamp size

CHAPTER 10

BACK-UP, SECURITY, AND PROTECTION SYSTEMS

10-1. Other systems.

Previous chapters have outlined methods for servicing electrical system components such as switchgear, transformers, rotating equipment, etc. These are the major areas in which real property electrical shops are involved. There are, however, many other interior systems which merit some mention. Detailed operation and maintenance data on these systems are difficult to develop due to the wide variety of types of interior systems and the uniqueness of each system. It is, therefore, suggested that all manufacturer's publications for a particular system be obtained and all recommended maintenance and troubleshooting practices be followed.

10-2. Emergency and stand-by systems.

The function of an emergency power system is to provide a source of electrical power of required capacity reliability, and quality for a given length of time to loads within a specified time after loss or failure of the normal supply. The continued reliability and integrity of this power system is dependent upon an established program of routine maintenance and operational testing. This program shall be based upon manufacturer's recommendations, instruction books, and the minimum requirements presented in this section. Instruction books protided by the manufacturer shall contain: a detailed explanation of the operation of the system; instructions for routine maintenance; detailed instructions for repair of the components of the system; pictorial parts list and part numbers; and, pictorial and schematic electrical drawings of wiring systems, including operating and safety devices, control panels, instrumentation and annunciators.

a. Special tools and testing devices required for routine maintenance shall be available for use when needed. Spare parts shall be stocked as recommended by the manufacturer. A written record of inspections, tests, exercising, operation, and repair of an emergency power system shall be maintained on the premise. This record shall include: date of the maintenance report; identification of the servicing personnel; and, notification of any unsatisfactory conditions and corrective actions taken, including parts replacement.

b. Transfer switches shall be subjected to a maintenance program to include tightening connections, inspection or testing for evidence of overheating and excessive contact erosion, removal of dust and dirt, and replacement of contacts as required. As a minimum, a monthly load test of thirty minute duration shall be conducted on an emergency power system. Backup power should be tested at full critical emergency load. If it is impossible to test at full load, then the test load capacity shall not be less than 50 percent of the total connected critical emergency load. The test should include a complete cold start of the generator. Consideration should also be given to more stringent conditions as recommended by the individual energy converter manufacturer. At the time of emergency power system load testing, all transfer switches and emergency system circuit breakers shall be exercised. The routine maintenance and operational testing program shall be overseen by a properly instructed individual.

10-3. Signal systems.

Signal systems include nurses' call systems, paging systems, buzzers, intercommunication sets and similar devices. For the most part, these do not require servicing at regular intervals. Generally, it is sufficient to clean the equipment occasionally and perform repair after some trouble is indicated. Local evaluation will be used in determining servicing requirements.

10-4. Detection systems.

There are many types of intrusion and fire detection systems in use at military installations. All require frequent tests and checks, in some instances as often as once a day. The emphasis is on operational tests to ensure the continued functionability of the designed system, rather than on routine maintenance of component parts. Spare parts such as relays, contacts, batteries, transistors, pilot lamps and detectors should be stocked for fast replacement. Further information is available from publications listed in appendix A. In all cases, the manufacturer's instructions should be carefulIy followed. Detection alarm systems are generally composed of very rugged and reliable components. Little repair work is required other then replacement of expendable parts and maintenance generally involves the cleaning of alarm system sensors, such as smoke detectors. Because most systems appear complicated and highly sophisticated at first, the tendency is to turn over the maintenance to a service company. In actuality, the systems are much less complicated and most electrical servicemen can master the work with brief training. Electrical shops nor-

really have all the tools and test equipment needed to service these alarm systems. Consequently, the cost will be much less if the routine maintenance is performed in-house.

a. Fire detection system. The concept of defense in depth is applied in fire protection when an early warning fire detection system is used to communicate plant or equipment status to a central location or assigned staff. The first line of defense is the early warning fire detection system designed to detect the particles of combustion formed before overt signs of fire appear, followed by systems designed to detect fire and release extinguishing agents. The system's purpose is to provide the earliest possible warning of a potential fire hazard, principally by the extensive use of ionization smoke detections. One of the major advantages of using a remote multiplexing system for fire detection is the ease of adding alarm detectors without the requirement of long conduit and multiple cable runs throughout the plant. A sample arrangement of this type of system is as shown in figure 10-1. The early warning fire detection system may be a Class A proprietary protective signaling system that meets the requirements of The National Fire Protection Association (NFPA) Standard for the Installation, Maintenance, and Use of Protective Signaling Systems (NFPA 72-90). Class A and Class B fire detection circuits are shown in figure 10-2. Class A means a fire alarm can be received and displayed at the central alarm station in the abnormal presence of a single break of a single ground fault in any signaling circuit. A Class B system does not include this emergency operating feature. NFPA 72-90 also deals with the styles of supervisory circuits. NFPA 72-90 further requires that the central alarm station be continuously manned. Alternative main power supply sources must be provided within the supervisory central station. The signal-initiating device in the fire detection system is the fire detector. The three basic types of detectors can detect smoke, heat, and flame. In addition to these generic types, detectors can be configure as spot type or line type (table 10-1). In spop-type detectors, such as smoke detectors, the sensing element is concentrated at a particular location. Line-type detectors sense temperature changes along the length of a metal wire. When heat above a predetermined level reaches the lines strung throughout an area to be protected, an alarm or alarm and fire-suppression system is triggered. Heat detectors are fixed-temperature, rate-compensated, or rate-of-rise types. A fixed-temperature detector is a device that responds when its operating element becomes heated to a predetermined level or higher. A rate-compensated detector is a device that responds when the temperature of the air surrounding the device reaches a predetermined level, regardless of the rate of temperature rise. A rate-of-rise detector is a device that responds when the temperature rises at a rate exceeding a predetermined amount.

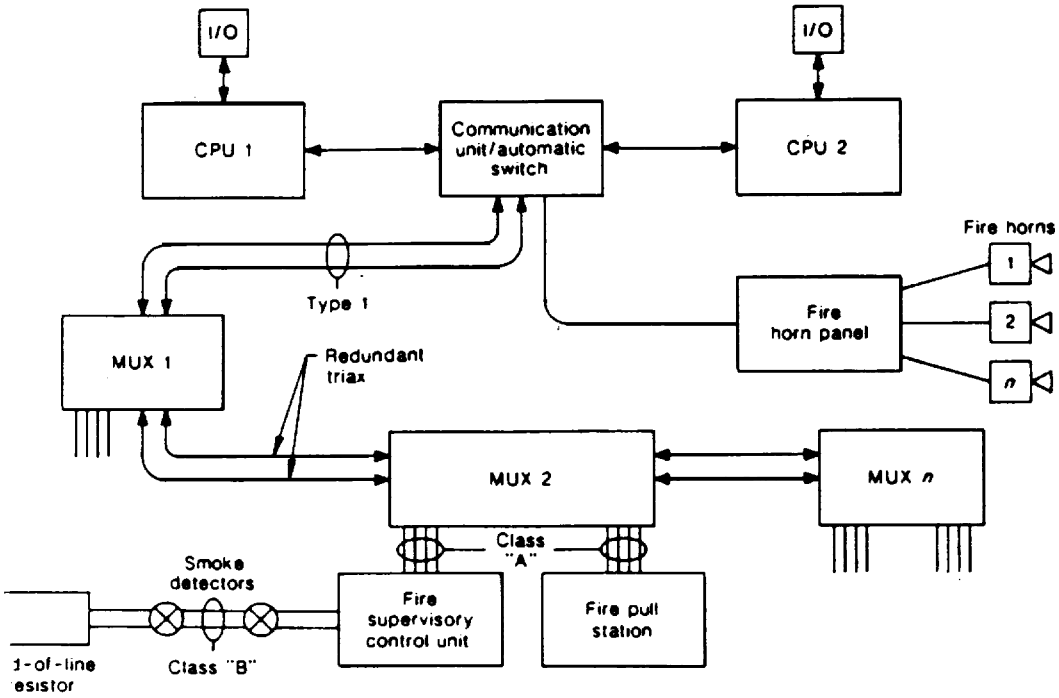

Figure 10-1. Sample computer based fire detection system.

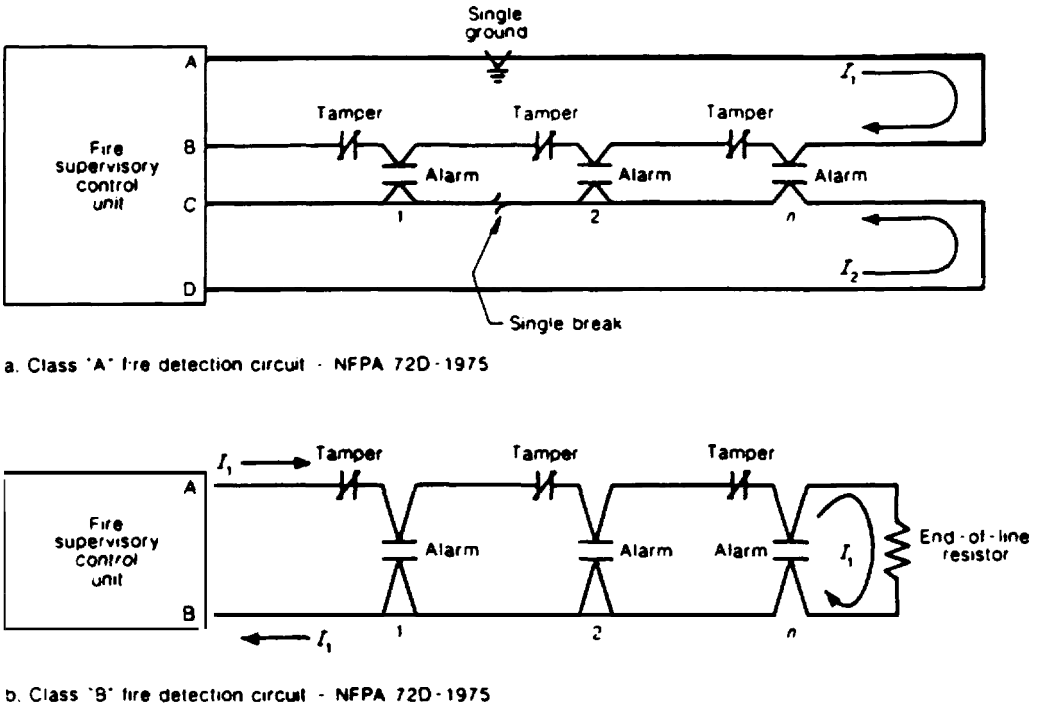

Figure 10-2. Class A and B fire detection circuits.

(1) *Smoke detectors.* Two types of smoke detectors are used: ionization and photoelectric. Ionization smoke detectors contain a small amount of radioactive material which ionizes the air in the sensing chamber, thus rendering it conductive and permitting a current flow through the air between two charged electrodes. When smoke particles enter the ionization area, the detector circuit responds with an alarm or buzzing.

(a) Photoelectric spot-type detectors contain a chamber that has either overlapping or porous covers of light that allows the entry of smoke. The unit contains a light source and a special photosensitive cell in the darkened chamber. The cell is either placed in the darkened chamber at an angle different from the light path or has the light blocked from it by a light stop or shield placed between the light source and the cell. With the admission of smoke particles, light strikes the particles and is scattered and reflected into the photosensitive cell. This causes the photosensing circuit to respond to the presence of smoke particles in the smoke chamber.

(b) Flame detector is a device that responds to the appearance of radiant energy visible to the human eye or to radiant energy outside the range of human vision.

(c) Photoelectric flame detector is a device which the sensing element is a photocell that either changes its electrical conductivity or produces an electrical potential when exposed to radiant energy.

(d) Flame flicker detector is a photoelectric flame detector with means to prevent response to visible light unless the observed light is modulated at a frequency characteristic of the flicker of a flame.

(e) Infrared detector is a device with a sensing element which is responsive to radiant energy outside the range of human vision.

(f) Ultraviolet detector is a device with a sensing element which is responsive to radiant energy outside the range of human vision.

(2) *Sprinkler systems.* Protecting the plant from fire frequently requires the installation of a sprinkler system. Equipment consisting of overhead piping and attached sprinklers connected to an automatic water supply protects defined spaces and a variety of hazards. There are four major types 'of sprinkler systems: The wet-pipe system is the simplest and most common. The piping is always filled with water, which begins to flow as soon as the first sprinkler opens. Other types are dry-pipe, deluge, and pre-action systems.

b. Security system. Before the advent of low-cost computer multiplexed hardware, security systems were simple hardwired alarm systems, providing a minimum level of intrusion detection. Today, the system may be a fully redundant computer-based system interfaced with a redundant looped time-division-multiplexed communication network for gathering alarm data from sensors and for sending

Table 10-1. Comparison of fire detectors.

Type of Detector	Applications	Response	Comments
Photoelectric	Offices, computer rooms; projected beam type used in open areas and to protect high rack storage	Early warning to smoldering fires, sometimes in seconds	Must be used indoors where smoke can be contained; not adversely affected by wind; moderate cost
Ionization	Offices, computer rooms	Early warning to fast flaming fires, sometimes in seconds	Adversely affected by wind; should be used indoors. moderate cost
Fixed temperature	Large areas where life safety is not paramount; and to protect heat generating equipment	Responds when a predetermined temperature is reached, usually in minutes	Usually limited to indoor applications; has a very low false alarm rate; a simple reliable device; low cost
Rate of rise; rate compensated	Large areas where life safety is not paramount	Responds to a specified temperature rise or a selected protection level, usually faster than fixed-temperature detector	Should be used indoors; may be affected by space heaters; low false alarm rate; suitable for corrosive environments: low cost
Infrared	Hazardous processes; explosion suppression, ducts or other dark, enclosed areas; aircraft hangars	Rapid response in milliseconds to infrared radiation generated by fire	Indoor use, may be affected by temperature, other IR sources; explosion-proof housings available; high cost
Ultraviolet	Hazardous processes, explosion suppression, fuel loading, aircraft hangars	Rapid response in milliseconds to ultraviolet radiation generated by fire	May be used indoors or out; explosion-proof housings available; may be blinded by oil film, thick smoke, sensitive to arc welding; high cost

commands to release locked doors under the card-access control subsystem. The remote multiplexer may be microprocessor-based units, capable of data collection, communication with the host computer, and performing limited-access control functions. The security system provides location information as well as delay time for the guards. By successive detections, the security force can track the intruder and relay location information via portable radio communications equipment to the responding guards. In turn, the guards can constantly inform the security force on the progress of their work or the need for additional assistance. The cameras, using various means of target intensification, can "see" better than the human eye. Guard patrols are also used to detect unusual activity. Perimeter detection is accomplished by the application of electronic detection systems.

(1) *Microwave detection links.* These devices are mounted on posts inside the fence. Transmitters radiate amplitude modulated X-band energy and receivers detect and process the received energy. Thus, an invisible energy envelope is produced that will detect an intruder.

(2) *Infrared detection links.* These devices are postlike and mounted inside the fence. Transmitters radiate multiple beams of modulated infrared energy, and the receivers detect and process the energy. Penetration of the invisible infrared shield will alarm the system.

(3) *E-field links.* Transmitter wires and receiver wires are strung horizontally from mounting posts located inside the fence or mounted on the fence. A radio-frequency energy field is generated around the wires. The intrusion of a person into the invisible field will "short" energy, creating an alarm.

(4) *Buried sensor links.* Devices sensing seismic, pressure, (or electromagnetic disturbances for a combination of these) are buried inside the fence and alarm upon the intrusion of someone into the field of detection.

(5) *Other systems.* Other systems are available that can be used in combination with the previously mentioned systems. The probability of detection by these outdoor devices depends on their application. Perimeter detection equipment must be applied with consideration of the environmental limitations of the device's technology. Once the intruder has penetrated the fence, he has entered what is called the protected area. Once again, visual or closed-circuit television surveillance may detect the intruder. Entry into a building is provided by the application of a balanced magnetic switch on doors and openings. This device uses an internal bias magnet to balance a delicate reed switch in the field of the external magnet attached to the door. Should the door be opened, even a fraction of an inch, or should another magnet be introduced in an attempt to defeat it, the switch will change state and alarm. Other devices for detection of an intruder may be applied inside the building, including microwave and infrared motion detection, photoelectric or laser beams, seismic, sound detection, passive infrared, and other devices. Because all the doors are locked and alarmed, a means of allowing personnel to enter and leave must be provided. Positive-access control is established at the main guardhouse located at the perimeter fence. All persons with a need to enter the protected area are screened by explosive detectors, metal detectors, and package X-ray detection equipment. Once permitted access to the plant protected area, they are only allowed into vital areas within the plant on a need-to-enter basis. Control of personnel movement into vital areas is by closed-circuit television/electronic-access control equipment. At each vital area door, split image closed-circuit television devices check the person against his picture identification card. He then inserts his coded card into a magnetic reader, which sends the coded information to the access computer. If the person has been authorized to enter the particular vital area of the plant at that particular time, the computer verifies the code and allows access. The guard watches the entrance via wide-angle closed-circuit television to ensure that the person enters alone. Using state-of-the-art circuit design and multiplexing communication techniques, the alarm monitoring systems offer a high degree of tamper resistance. Redundancy is achieved by using a central alarm station and a separately located secondary alarm station. Electronic line supervision or digitally encoded transmissions are used to prevent unauthorized persons from touching the system wiring. Any tampering will cause an alarm. Access control, tamper indication, and administrative controls combine to prevent an insider from attempting to sabotage the plant or help an outsider penetrate the security system.

10-5. Monitoring systems.

Supervising the operations of the environmental conditions throughout a building can be achieved by the use of an integrated monitoring system. This system consists of a centrally located console capable of continually monitoring many activities. Console input signals may be initiated by pressure, temperature, speed, humidity, air flow, electric current, water, steam, sewage, or opening or closing of electric contacts. With this system, an operator can quickly determine the operating condition of any number of sewage lift stations, air conditioning equipment, boiler auxiliaries or any other measur-

able condition or situation. Malfunctions are pinpointed in moments. The necessity for making daily field checks is reduced or eliminated. Monitoring systems consist of transducers located at the monitored equipment which convert some action into a signal which, in turn, is transmitted to the console by pneumatic, electrical or electronic means. Detailed plans, instruction books and maintenance manuals on such systems should be obtained. Building personnel, whenever possible, should survey the installation of the system and be able to locate components and determine operational methods. Most monitoring systems contain solid-state devices which are very reliable, but still require annual servicing to ensure that all parts are functioning properly (see chap 7). If skilled in-house personnel are not available, local service contracts should be used to accomplish servicing.

CHAPTER 11

HAZARDOUS SUBSTANCES

11-1. Environmental protection.

This chapter concentrates on the Environment Protection Agency (EPA) identification of hazardous substances. If a hazardous substance is released into the environment in a reportable quantity the facility Hazardous Waste Coordinator must be notified. "Release" by definition involves any spilling, leaking, pumping, emitting, emptying, discharging, injecting, escaping, dumping or disposing of a hazardous substance. A "reportable quantity" varies by weight for each hazardous sub stance. Refer to Section 311 of the Clean Water Act (CWA) for established quantities for hazardous substances. For hazardous substances not listed, one (1) pound or more of that substance released to the environment is reportable until otherwise specified by the EPA. Failure to comply with notification requirements may result in civil and criminal penalties. In all cases, handling and disposing of any hazardous substance must be directed by the Site Hazardous Waste Coordinator. Hazardous substances include:

a. Wastes listed in the Resource Conservation and Recovery Act (RCRA).

b. Air pollutants listed in the Clean Air Act (CAA)-Section 112.

c. Substances and priority pollutants listed in the Clean Water Act (CWA)-Sections 311 and 307a.

d. Chemical substances designated under the Toxic Substances Control Act (TSCA)-Section 7.

e. Other substances as designated by the EPA

11-2. Polychlorinated biphenyls (PCBS).

PCBs belong to a broad family of organic chemicals known as chlorinated hydrocarbons. Virtually all PCBs have been synthetically manufactured. Their use has primarily been in transformers and capacitors but they are also found in fluorescent ballasts. PCBs are no longer intentionally manufactured in the United States although inadvertent production of PCB byproducts can occur when chlorine, organic carbon, elevated temperatures or catalysts are present together in a process. The Monsanto Corporation was the principal domestic manufacturer of PCBsand marketed the product under the trade name, Aroclor. However, other companies who used PCBs in the manufacture of transformers, capacitors, etc. used other trade names (table 11-1). From an electrical standpoint, one desirable feature of PCB is its chemical stability. Resistance to degradation by heat, oxidation etc. is very desirable. But it is the long life feature, coupled with the fact that PCB is bioaccumulative and concentrates in the fat tissue of fish and other animals, including man, that has led to its identification as an environmental problem. Handling, storage and disposal of PCBs and products containing PCBs are therefore regulated by the EPA and the Site Hazardous Waste Coordinator. All questions pertaining to hazardous wastes should be directed to that office. Basic concepts have been presented to acquaint facilities personnel with the hazards of PCBs. Physical problems which maybe related to PCB exposure include an acne-like skin eruption associated with baking, soldering or heat transfer applications; changes in skin pigmentation; peripheral numbness; digestive upsets; headaches; and fatigue. PCB has also been found by the Occupational Safety and Health Administration (OSHA) to include tumors in experimental animals after repeated oral ingestion and concludes that PCBs are a potential carcinogen to humans. Unless laboratory tests confirm the presence of less than 50 parts per million (PPM) of PCB, then all transformers or capacitors filled with petroleum-based dielectric are assumed to be PCB-contaminated for EPA regulatory purposes. Sample testing an oil sample involves a comprehensive test, a gas-in-oil test and a presence of PCBstest. The gas-in-oil analysis determined the concentrations of gases absorbed in the oil sample. The presence of PCBs analysis determines the concentration of PCBs in the oil sample. Oil classifications and concentrations are: non-PCB—less than 50 PPM; PCB contaminated-greater then 50 PPM but less than 500 PPM and, PCB-greater than 500 PPM. The comprehensive test includes the following analyses:

a. Dielectric strength.

b. Color.

c. Acidity.

d. Water content.

e. Viscosity.

f. Specific gravity.

g. Pour point.

h. Interracial tension.

i. Power factor.

j. Corrosive sulphur.

k. Visual examination.

l. Particle count.

Table 11-1. Common trade names for PCBs by manufacturers.

NAME	MANUFACTURER
Aroclor	Monsanto
Asbestol	American Corp.
Askarel	(1)
Chlorextol	Allis Chalmers
Diaclor	Sangamo Electric
Dykanol	Cornell Dubilier
Elemex	McGraw Edison
Hyvol	Aerovox
Inerteen	Westinghouse Electric
No-Flamol	Wagner Electric
Pyranol	General Electric
Saf-T-Kuhl	Kuhlman Electric
Clophen	Bayer (Germany)
DK	Caffaro (Italy)
Fenclor	Caffaro (Italy)
Kennechlor	Mitsubishi (Japan)
Phenoclor	Prodelec (France)
Pyralene	Prodelec (France)
Santotherm	Mitsubishi (Japan)

Note. Generic Trade name use for non-flammable insulating liquids containing PCBs in capacitors and transformers.

11-3. Lighting ballast.

Since the capacitor of the ballast in fluorescent lamps contains a small quantity of PCB the EPA has laid out regulations for the disposal of lighting ballast:

a. If the PCB lighting ballast is leaking the disposal is regulated under the Toxic Substance Control Act (TSCA). The leaking ballast must be incinerated at an EPA approved incinerator.

b. If the PCB lighting ballast is not leaking the disposal is not under the TSCA. Check with your local EPA office to find out any requirements in your area for the disposal.

11-4. Flammable liquids and gases.

Flammability is the capability of a substance to ignite easily, burn intensely and spread rapidly. Extreme caution should be taken when storing and handling flammable materials, follow the National Fire Protection Association (NFPA) Standard 251. Of the flammable and combustible liquids and gases in use, the most common are liquid hydrogen, liquified petroleum gas and natural gas (methane).

a. Hydrogen. Liquid hydrogen, like other cryogenic liquids, presents a hazard due to its extremely low temperature, and the high pressures that can be generated if it is allowed to evaporate in a confined space. However, the major hazard lies primarily in the wide ranges of flammability and detonability of gaseous hydrogen in air. The principal method of preventing hydrogen gas ignition or detonation is by diluting the gas below the lower limit of flammability and eliminating all sources of ignition. This can be accomplished by:

(1) Providing adequate ventilation.

(2) Avoiding areas where pocketing may occur.

(3) Minimizing confinement.

(4) Limiting the amount of liquid hydrogen at any one location.

(5) Using non-sparking tools and explosion-proof equipment.

(6) Grounding equipment properly.

(7) Avoiding open flames.

(8) Observing no-smoking rules.

b. Liquified petroleum gas (LPG). LPG is a dangerous fire and explosion hazard when released in air. Vapors may flow along surfaces for substantial distances, reach a source of ignition and flash back. LPG is also an asphyxiant. It is heavier than air, and may accumulate in pits and other low lying areas where it may displace air. Contact with liquified gas can cause frostbite. The following special precautions must be observed:

(1) LPG must be stored and used in wel]-ventilated areas, and kept away from heat, ignition sources, and oxygen and chlorine cylinders.

(2) LPG systems shall have approved containers, valves, connectors, manifold valve assemblies and regulators.

(3) LPG systems shall meet all Department of Transportation specifications.

(4) LPG containers and vaporizers shall have at least one approved safety relief valve.

(5) LPG shall not be stored within buildings.

(6) LPG storage locations shall be equipped with at least one 20-B/C rated fire extinguisher.

c. Natural gas (methane). Under normal storage and handling conditions, natural gas is stable when contained. But when mixed with air or other oxidizing agents, it readily becomes flammable or explosive. Natural gas is lighter than air and can be an asphyxiant by displacing air. The following precautions must be observed.

(1) Cylinders must be stored in well ventilated and low fire hazard areas.

(2) All lines and equipment used with natural gas must be grounded to prevent static sparks.

(3) Smoking must not be allowed. '

(4) Non-sparking tools must be used.

11-5. Toxic materials.

Toxicity is the degree to which a substance will affect living cells under certain conditions. It is dependent upon the dose, rate, method and site of absorption. It is also dependent upon the health, tolerance, diet and temperature of an individual. Physiological effects result from inhalation, ingestion or absorption of a toxic material. To limit this exposure, smoking and eating are not permitted in hazardous areas, and personnel are required to wash their hands thoroughly before eating, smoking or using toilet facilities.

a. Mercury. Mercury metal is a distinct hazard because of its property of vaporization at room temperature. The rate of evaporation increases with temperature and with the surface area exposed. This property is of great importance since mercury can seep into human skin. Mercury or metal contaminated with mercury should never be heated without providing exhaust ventilation or approved air respirators.

b. Solvents. Special precautions should be taken when working with solvents due to potential toxic affects and flammability characteristics. Protective measures include providing plenty of ventilation or respirators; using rubber gloves, chemical safety goggles, and face shields; and providing for immediate availability of emergency eyewash facilities. Trichlorethylene and perchloroethylene are solvents suspected of being carcinogenic. The use of carbon tetrachloride as a solvent is prohibited. Acute poisoning caused by prolonged inhalation may result in death.

CHAPTER 12

ELECTRICAL SAFETY

12-1. Human factor.

The protection of human life is paramount. Electrical equipment can be replaced; lost production can be made up; but human life can never be recovered nor human suffering ever compensated. The principal personnel dangers from electricity are that of shock, electrocution, and/or severe burn from an electrical arc or its effects, which may be similar to that of an explosion. The major contributors to work-related electrical accidents are unsafe conditions or unsafe practices. The most common unsafe conditions are damaged, defective, burned or wet insulation or other parts; improperly guarded or shielded live parts; loose connections or strands pulled loose; and equipment not grounded, or poor or inadequate grounding connection. Unsafe practices include failing to de-energize equipment being repaired or inspected; assuming an unsafe position near energized equipment; using tools or equipment too near bare energized parts; and misusing tools or equipment. Safety manuals provided by the military services are based upon the National Electrical Safety Code (NESC) which establishes general safe practices for construction, maintenance, and operation of all electric utility systems. The rules contained in these manuals are considered mandatory and must therefore be referenced at all times. Any deviations from these procedures must be agreed upon by the safety director. In general, to improve safety to personnel and avoid accidents, special attention must be directed to the following:

a. Be alert. Alertness is particularly essential on new assignments until safe habits are formed, but should never be relaxed since conditions often change.

b. Be cautious. Caution should be exercised at all times.

c. Develop safe habits. Safe habits result from repeated alertness and caution, and continuous adherence to the rules.

d. Know your job. Have complete and thorough information before proceeding.

e. Observe the rules. The rules and instructions applying to a variety of cases, both electrical and mechanical in nature, cover most of the common causes of accidents.

12-2. Equipment isolation.

As a general rule, no electrical apparatus should be worked on while it is energized. If it is not known whether a circuit is de-energized or not, it must be assumed that the circuit is energized and dangerous until such time it is proven otherwise. It is also important to regard exposed copper as energized and treat it accordingly since copper is rarely used except to carry current. When working near electricity, do not use metal rules or flashlights, or metallic pencils, and do not wear watch chains, finger rings or other objects having exposed conducting material.

a. De-energization. Personnel, who must work on de-energized equipment, should be protected against shock hazard and flash burns that could occur if the circuit were inadvertently re-energized. To provide this protection, the circuit must first be de-energized. Check applicable up-to-date drawings, diagrams and identification tags to determine all possible sources of supply to the specific equipment. Open the proper switches and/or circuit breakers for each source in order to isolate the equipment to be worked on. In cases where visible blade disconnecting devices are used, verify that all blades are fully open. Drawout-type circuit breakers should be withdrawn to the fully disconnected position. Do not consider automatic switches *or* control devices to be a disconnecting means for personnel safety.

b. Tagging and lock-out. All employees should plan for safety by following all lockout procedure rules before beginning work on any equipment. Four steps vital to any good lockout procedure are:

(1) Lock the equipment to prevent its use. Any energized equipment should be shut down by turning off power or closing valves to eliminate the possibility of electrocution, the inadvertent operation of machinery, or the release of hazardous materials.

(2) Identify the equipment to let other employees know it is not in service, when the lockout was initiated, and the purpose of the lockout.

(3) Clear the area to assure that other employees are a safe distance from the equipment before the lockout is tested.

(4) Test the equipment to verify that the equipment cannot be energized and that the lockout renders it inoperable. Before the test, check to be sure that all interlocks are engaged.

(5) Once the equipment is isolated, precautions must be taken to guard against accidental re-energization. Attach to the operating handles of the open disconnecting devices padlocks (fig 12-1) and/or approved red safety tags (fig 12-2). Red tags

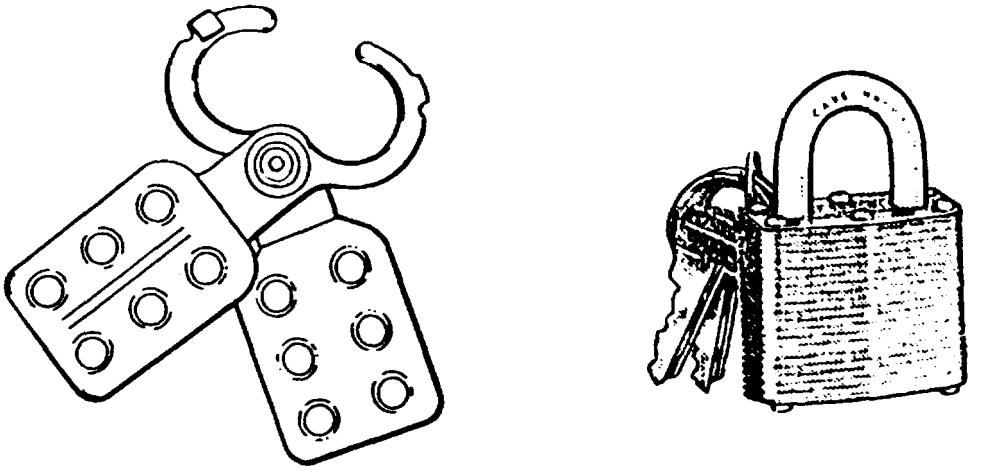

Figure 12-1. Padlock and multiple lock adapter.

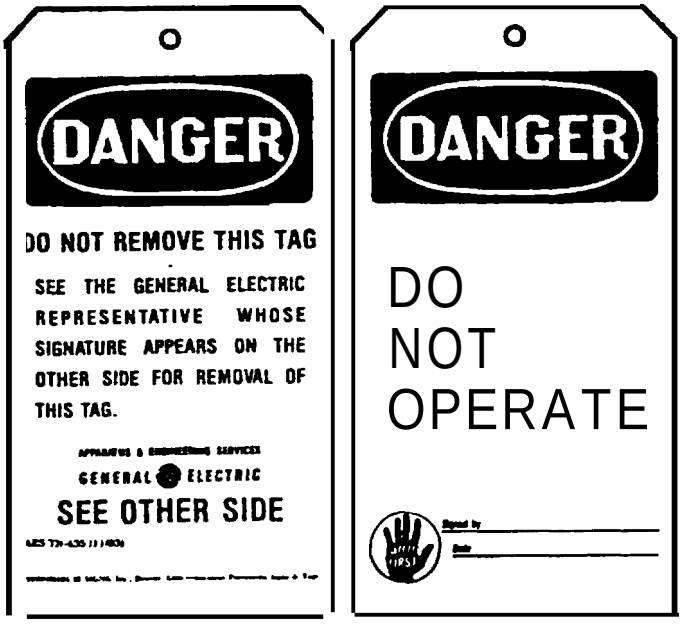

Figure 12-2. Typical safety tag.

are applied to devices to ensure that their positions will not be changed by unauthorized persons as long as equipment is blinked out and red tagged. These tags must identify the person having the key to the lock and the reason why the circuit is open. They must also show the time and date of its application. If fuses have been removed to de-energize the equipment, special precautions should be taken to prevent their unauthorized reinsertion. The following general rules should be observed in every lockout situation:

(a) An employee should never give a lock to another employee.

(b) Maintenance personnel should learn proper lockout procedures.

(c) All employees must follow correct lockout procedures.

c. Testing for voltage. After the equipment has been de-energized, tagged and locked out, the circuit must be tested to confirm that all conductors to the equipment are de-energized. This test is especially important on circuits which involve switches and freed-type breakers in which the blades cannot be visually checked. Use a volt meter or a volt-ohm-milliammeter (VOM) as described in paragraph 13-2 to test the de-energized circuit for zero volts. Before and after testing the affected conductors, determine that the VOM is operating satisfactorily by testing the voltage of a source which is known to be energized. Once these steps are completed, the equipment is safe to work on.

d. Maintenance grounding. In spite of all precautions, de-energized circuits can be re-energized inadvertently. When this occurs, adequate maintenance or safety grounding is the only protection for personnel. For this reason, it is especially important that adequate grounding procedures be established and rigidlv enforced. The tools used to apply a maintenance ground are primarily special heavy-duty clamps which are connected to cables of adequate capacity. These clamps and cable should not be larger than necessary because bulkiness and weight hinder personnel while connecting them to the conductors, Chains, small diameter wire or battery clamps should not be used to apply a maintenance ground because they can easily be vaporized in the event of a fault. Prior to application, ground cables should be inspected for broken strands in the conductors and loose connections to the clamp terminals, and clamp mechanisms should be checked for defects. Defective equipment should be replaced. Maintenance grounds should be applied on each side of a work point, or at each end of a de-energized circuit.

(1) *Ground cables.* Ground cables must be sized for the maximum available fault current. Due to the wide range of system voltages and fault currents, no published standards have been developed for specific applications or locations of grounding cables. A general survey of commercially available grounding and related safety devices shows use of 1/0 American Wire Gauge (AWG) copper cables. This size appears to be a good compromise between a reasonable range of fault currents, the cable's ability to safely conduct those currents given the thermal capacity, and the ease of physically handling the particular size wire. Ground cables (fig 12-3) should be no longer than necessary in order to keep cable resistance as low as possible and to minimize cable slack thereby preventing their violent movement under fault conditions. Ground cables should be connected first to the metal structure or switchgear ground bus and then to a phase conductor of the de-energized equipment. Then the ground cables should be connected between phases and to the system neutral (when available) to minimize the voltage drop across the work area should re-energization occur. When removing maintenance grounds, the above procedure should be reversed. Care must be taken to remove all ground cables before the equipment is m-energized. It is recommended that all conductors be tested with a megohmmeter to ascertain if any are still grounded.

(2) *Ground clamps.* Solid metal-to-metal connections are essential between ground clamps (fig 12-4) and the de-energized equipment. Ground clamps should have serrated jaws because it is impractical to clean conductors from paint or corrosion. The clamps should be tightened slightly in place, given a rotation on the conductors to provide a cleaning action by the serrated jaws, and then be securely tightened. Ground clamps which attach to switchgear ground bus are equipped with pointed or cupped set screws which should be tightened to ensure penetration through corrosion and paint, to provide adequate connections.

12-3. Switchgear.

The following precautions should be taken when working on switchgear.

a. Before you work on the switchgear enclosure, remove all drawout devices, such as circuit breakers, instrument transformers, fuses and control power transformers.

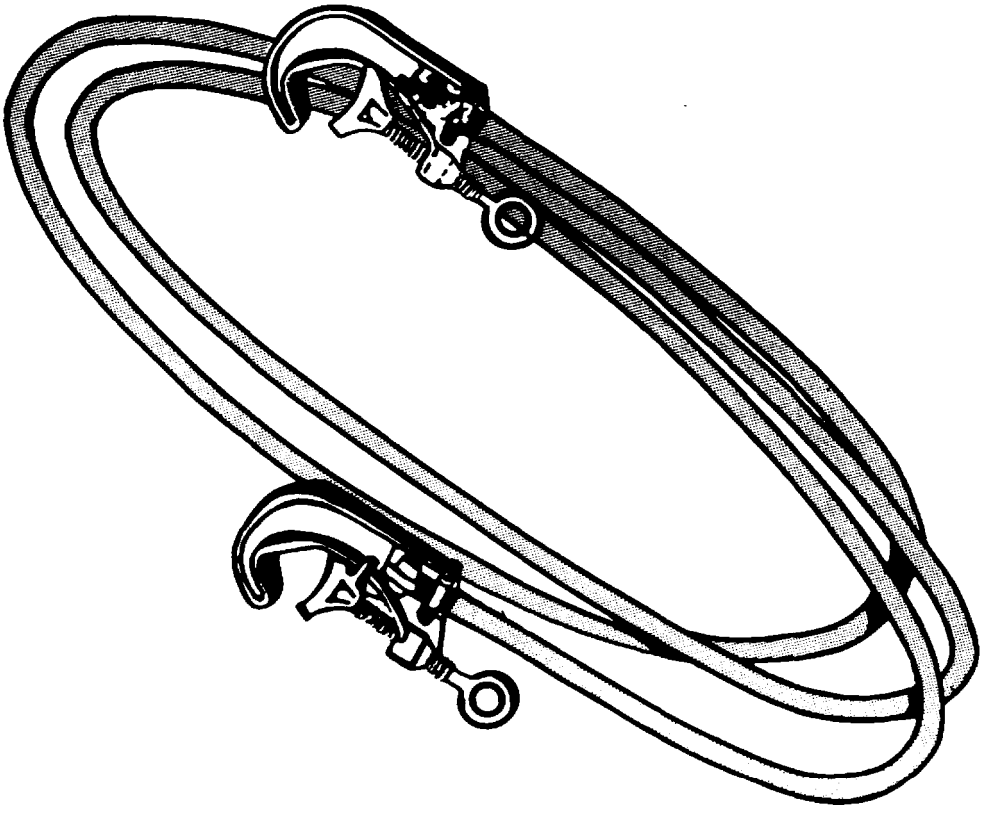

Figure 12-3. Ground cable.

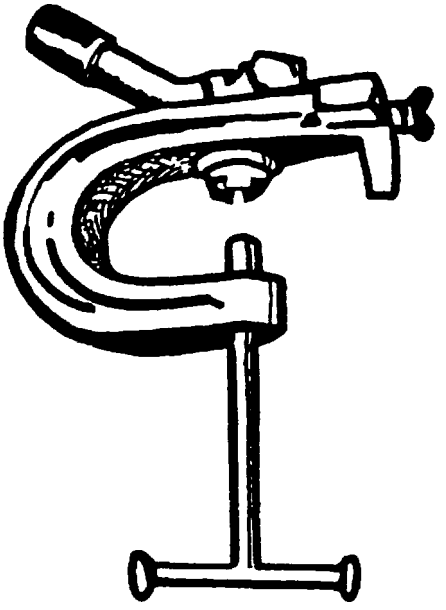

TOWER

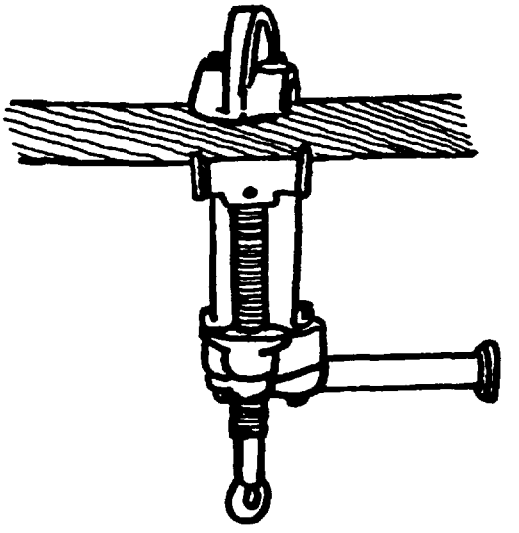

CABLE

Figure 12-4. Grounding clamps.

b. Do not lay tools on the equipment while you are working. It is too easy to forget a tool when closing an enclosure.

c. Circuit breakers and switches are rated at maximum capacity and must not be used beyond this limit for fear of exploding an under-rated device.

d. If the enclosure is to be opened for any work at all, make sure power is off the bus. The insulating coating on the buswork is not sufficient to protect personnel working around it.

e. Knife switches must not be used to open power circuits, except for certain approved types of enclosed switches designed for that purpose. Before closing a disconnecting switch, make sure that conditions are safe for such an operation. Then throw the switch with a swift action without hesitation. Keep the body away from the front of these enclosures when operating them. Turn your head to prevent being burned from a possible flash.

f. Maintenance closing devices for switchgear are not suitable for closing in on an energized system.

12-4. Capacitors.

Before changing capacitor connections or doing work of any kind on them, discharge the capacitors with a properly insulated medium from terminal to terminal, terminals to case, and case to ground. Remember to keep capacitors short-circuited when not in use.

12-5. Rotating equipment.

The safety tips below must be followed when working on rotating equipment:

a. All rotating machinery must be carefully and thoroughly inspected for foreign objects before being started. This inspection must cover the machine both inside and outside. Loose articles lying on the base, pedestals, frame or blocking may fall or be drawn into the rotating parts; articles inside the machine may be thrown out.

b. Do not wear neckties or any other loose clothing, or carry loose tools that may get caught in rotating machinery.

c. At all times, the frames of all machinery, including portable hand tools, must be securely grounded.

d. While a machine is in motion or has voltage applied, brushes shall not be shifted. Even when inspecting brushes, the voltage should not be removed and extreme caution must be observed.

e. The commutators of DC machines must not be cleaned while voltage is applied. If cleaning is necessary, disconnect the source of power and allow the machine to coast while the operation is being performed.

f. Never open a field circuit unless some means is available to limit the induced voltage. Cutting in a discharge resistance is effective and protects an operator from injury and the machine from damage.

g. Rotating machinery must not be loaded or speeded beyond their ratings.

12-6. Transformers.

Never open-circuit the secondary of a current transformer having current flowing through its primary winding because of the resulting high induced voltages. If a current transformer has no secondary connected load, then the secondary terminals should be shorted. The secondary windings of both current and potential transformers must be grounded.

12-7. Wiring and testing.

Observe the safety rules below when wiring or testing:

a. Never start work or allow anyone else to start work on any circuit until you have made certain that the circuit has been properly de-energized, tagged, locked-out and grounded (see para 12-2). Inspect terminal connections and make sure that the bolted, soldered, crimped or welded lugs are secure.

b. Complete and inspect all wiring before making connection to the power circuit.

c. Before a plugging operation is attempted, the apparatus and circuit must be de-energized by opening a breaker or a switch.

d. When plugging power, first plug one end of the cable into the "load circuit" so that no power is on the cable. Then plug the other end firmly into an energized receptacle. When disconnecting a plug, reverse the sequence above.

e. When plugging to a grounded power supply the first conductor shall be connected in the grounded side of the circuit.

f. Whenever using a test table to operate electric equipment on which test set controls may be "hot-to-ground", stand on an insulated floor mat.

g. At least two persons should be present in the general area of all testing work of a hazardous nature, so that emergency assistance will be available.

h. Use only one hand whenever practical when working on circuits or operating control devices.

i. Instruments are likely to be "hot-to-ground", and power shall be removed from them before any reconnecting is attempted.

j. Carefully insulate exposed connections.

k. Under no circumstances shall cables with damaged insulation or without terminals be used.

l. Keep wiring off an iron floor. Do not roll trucks or other objects over any exposed cable.

m. The frames of all equipment under test or used in test must be grounded before power is applied.

n. Whenever connection is made to power circuits, proper protection must be afforded to both personnel and equipment by suitable opening devices.

o. Where connection is made to a DC circuit one side of which is grounded, one circuit breaker in the high side is sufficient. Where neither side is grounded, a circuit breaker must be placed on both sides of the circuit.

p. Note identification of all circuit outlets at test tables and switchboards, and be sure you make the correct connection.

q. Use only portable droplights with insulated lamp guards and handles.

r. Always test a circuit that you are to work on for zero volts. Before and after this test, check a circuit that is known to be energized so that the functionability of the tester maybe verified.

s. Do not rely on the solid insulation surrounding an energized conductor to protect personnel.

12-8. Mechanical.

Many power circuit breakers are both opened and closed with springs. These springs may remain charged even when a breaker has been withdrawn from its enclosure, and are capable of operating the breaker. If the breaker is closed, make sure the opening spring is discharged before you approach it with your tools or fingers. If the breaker is open, block it and wire the trip latch. Above all, read the manufacturer's instructions so that you can predict the condition of the breaker.

12-9. Danger warning and fire.

Approved danger warnings shall be used to indicate any temporary hazard, either electrical or mechanical, and the hazard area shall be sealed off. Under no circumstances shall this area be entered by unauthorized personnel until the warning is completely removed. Approved warning tags should be used, and military safety standards should be referenced for marking hazardous areas. Before attempting to extinguish an electrical fire, remove the voltage. Use fire extinguisher recommended for electrical fires but if none are available, attempt to contain the fire with water. Do not use carbon tetrachloride in confined areas, because of the poisonous fumes that may be emitted.

12-10. Personal protective equipment

For low voltage systems, the following personal protective equipment is recommended as a minimum:

a. Hard hats—

(1) ANSI Class A—limited voltage protection.
(2) ANSI Class C-no voltage protection.

b. Safety glasses (fig 12-5).

c. Safety shoes, steel toe.

d. Rubber gloves.

e. Breathing apparatus.

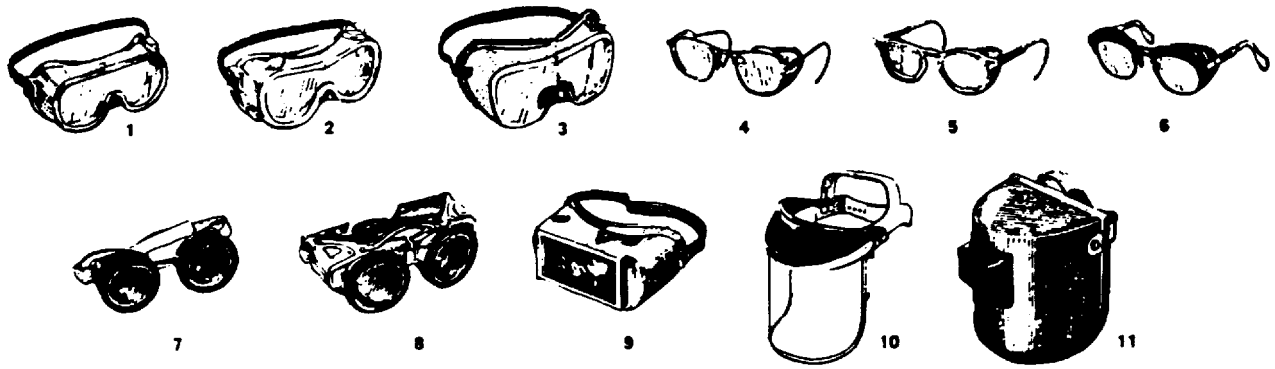

1. **GOGGLES**, Flexible Fitting, Regular Ventilation
2. **GOGGLES**, Flexible Fitting, Hooded Ventilation
3. **GOGGLES**, Cushioned Fitting, Rigid Body
*4. **SPECTACLES**, Metal Frame, with Sideshields
*5. **SPECTACLES**, Plastic Frame, with Sideshields
*6. **SPECTACLES**, Metal-Plastic Frame, with Sideshields
7. **WELDING GOGGLES**, Eyecup Type, Tinted Lenses (Illustrated)
7A. **CHIPPING GOGGLES**, Eyecup Type, Clear Safety Lenses (Not Illustrated)
8. **WELDING GOGGLES**, Coverspec Type Tinted Lenses (Illustrated)
8A. **CHIPPING GOGGLES**, Coverspec Type, Clear Safety Lenses (Not Illustrated)
9. **WELDING GOGGLES**, Coverspec Type, Tinted Plate Lens
10. **FACE SHIELD** (Available with Plastic or Mesh Window)
11. **WELDING HELMETS**

APPLICATIONS

OPERATION	HAZARDS	RECOMMENDED PROTECTORS: Bold Type Numbers Signify Preferred Protection
ACETYLENE–BURNING ACETYLENE–CUTTING ACETYLENE–WELDING	SPARKS, HARMFUL RAYS, MOLTEN METAL, FLYING PARTICLES	**7, 8, 9**
CHEMICAL HANDLING	SPLASH, ACID BURNS, FUMES	**2**, 10 (For severe exposure add 10 over 2)
CHIPPING	FLYING PARTICLES	**1, 3, 4, 5, 6, 7A, 8A**
ELECTRIC (ARC) WELDING	SPARKS, INTENSE RAYS, MOLTEN METAL	**9, 11** (11 in combination with 4, 5, 6, in tinted lenses, advisable)
FURNACE OPERATIONS	GLARE, HEAT, MOLTEN METAL	**7, 8, 9** (For severe exposure add 10)
GRINDING–LIGHT	FLYING PARTICLES	**1, 3, 4, 5, 6, 10**
GRINDING–HEAVY	FLYING PARTICLES	**1, 3, 7A, 8A** (For severe exposure add 10)
LABORATORY	CHEMICAL SPLASH, GLASS BREAKAGE	**2** (10 when in combination with 4, 5, 6)
MACHINING	FLYING PARTICLES	**1, 3, 4, 5, 6, 10**
MOLTEN METALS	HEAT, GLARE, SPARKS, SPLASH	**7, 8** (10 in combination with 4, 5, 6, in tinted lenses)
SPOT WELDING	FLYING PARTICLES, SPARKS	**1, 3, 4, 5, 6, 10**

Figure 12-5. Eye and eye protection selection guide.

CHAPTER 13

TEST EQUIPMENT

13-1. Equipment maintenance.

Accurate and appropriate test equipment is critical to the maintenance of electrical equipment. Listed in table 13-1 are some of the tools and equipment that each military facility electrical shop should possess. A brief description of the equipment application is also given. To perform specialized testing, such as infrared or insulation resistance testing, special equipment may be rented, or purchased depending upon projected future use. This testing may be performed by experienced military facilities personnel, or it may be contracted to an electrical testing shop. In the sections that follow three of the more common and versatile test equipment available are described: the volt-ohm-miniammeter, the clamp-on volt-ammeter, and the megohmmeter. As in the use of all test equipment, these devices should be used in strict compliance with the manufacturer's instructions and recommendations. Failure to do so may result in injury to personnel making the tests as well as produce meaningless data.

13-2. Volt-ohm-milliammeter (VOM).

This meter incorporates the functions of the voltmeter, ohmmeter and milliammeter into one instrument. A VOM can be used to measure AC or DC voltage, current and resistance, with several ranges for each function. There are also solid-state VOMS which perform the same functions. For precise operating procedures, the manufacturer's instructions must be referenced. A VOM which measures true RMS should be used.

a. Safety precautions. A VOM is usually designed to prevent accidental shock to the operator when properly used. However, careless use of the instrument can result in a serious or fatal accident. The VOM should only be used by personnel qualified to recognize shock hazards and trained in the safety precautions required to avoid possible injury. Safety precautions are as follows:

(1) Do not work alone when making measurements of circuits where a shock hazard can exist. Notify another person that you are, or intend to make such measurements.

(2) Locate all voltage sources and accessible paths prior to making measurement connections. Check that the equipment is properly grounded and the right rating and type of fuse(s) are installed. Set the instrument to the proper range before power is applied.

(3) Remember, voltages may appear unexpectedly in defective equipment. An open bleeder resistor may result in a capacitor retaining a dangerous charge. Turn off power and discharge all capacitors before connecting or disconnecting test leads to and from the circuit being measured.

(4) For your own safety, inspect the test leads for cracks, breaks or flaws in the insulation, prods and connectors before each use. If any defects exist, replace the test leads immediately.

(5) Do not make measurements in a circuit where corona is present. Corona can be identified by its sound, the odor of ozone or a pale-blue color emanation from sharp metal points in the circuit.

(6) Hands, shoes, floor and workbench must be dry. Avoid making measurements under humid, damp, or other environmental conditions that could affect the dielectric withstanding voltage of the test leads or instrument.

(7) For maximum safety, do not touch test leads or instrument while power is applied to the circuit being measured.

(8) Use extreme caution when making measurements in a radio frequency (RF) circuit where a dangerous combination of voltage could be present, such as in a modulated RF amplifier.

(9) Do not make measurements using test leads which differ from those originally furnished with the instrument.

(10) Do not come into contact with any object which could provide a current path to the common side of the circuit under test or power line ground. Always stand on a dry insulating surface capable of withstanding the voltage being measured, or that could be encountered.

(11) The range or function switch should only be changed when the power to the circuit under measurement is turned off. This will provide maximum safety to the user, eliminate arcing at the switch contacts and prolong the life of the meter.

b. Operation. Before making any measurements, the VOM pointer must be adjusted to zero. With the VOM in operating position, check that the pointer indicates zero at the left side of the scale when there is no input. If pointer is off zero, adjust the screw located in the case below center of the dial. Use a small screwdriver to turn the screw slowly clockwise or counterclockwise until the pointer is exactly over the zero mark at the left side of the scale. With the indicating pointer set on the zero mark, reverse the direction of rotation of the zero adjuster. Rotate

Table 13-1. Tools and equipment for effective electrical maintenance.

TOOLS OR EQUIPMENT	APPLICATION
1. Voltmeters, ohmmeters, clamp-on ammeters, wattmeters, clamp-on P.F. meters.	Measure circuit voltage, resistance, current and power. Useful for circuit tracing and troubleshooting.
2. Potential and current transformers, meter shunts.	Increase range of test instrument to permit reading of high-voltage and high-current circuits.
3. Tachometer	Checks rotating machinery speeds.
4. Recording meters, sequence event recorder.	Provide permanent record of voltage, current, power, temperature, etc. on charts for analytical study.
5. Insulation resistance tester, thermometer, psychrometer.	Test and monitor insulation resistance; use thermometer and psychrometer for temperature humidity correction.
6. Transistorized stethoscope.	Detect faulty rotating machinery bearings; leaky valves.
7. Air gap feeler gauges.	Check motor or generator air gap between rotor and stator.
8. Spring tension scale.	Checks brush pressure on D.C. motor commutators or on A.C. motor slip rings; test electrical contact pressure on relays, starters or contactors.
9. Magnifying glass, binoculars.	Use magnifying glass to examine brushes, commutators or small electrical contacts or parts; binoculars allow close inspection of remote parts.

Table 13-1. Tools and equipment for effective electrical maintenance--continued.

TOOLS OR EQUIPMENT	APPLICATION
10. Motor rotation tester.	Checks direction of motor rotation before connection.
11. Phase tester.	Checks phase rotation of a circuit.
12. Oscilloscope, vacuum-tube voltmeter, high impedance meters.	Used for electronic circuit testing.
13. Variable autotransformer.	Allows testing of circuits at reduced voltage.
14. Low-resistance tester.	Checks low-resistance paths of electrical contacts, switches, etc.
15. Light meter.	Indicates light intensity.
16. Portable capacitance and resistance bridge.	Provides accurate readings of capacitance and resistance.
17. Safety equipment (rubber gloves, boots, mats; grounding sticks; tic tracer, etc.)	Provides for safe and efficient electrical maintenance.

the zero adjuster a sufficient amount to introduce mechanical-freedom or "play" but insufficient or disturb the position of the indicating pointer. This procedure will eliminate disturbances to the zero setting from subsequent changes in temperature, humidity, vibration and other environmental conditions. Once the VOM is zero adjusted, anyone ofa dozen measurements canbe made. The two more common tests are for AC voltage and resistance.

(l) AC voltage measurement. Outlined below is the procedure for measuring voltage in a circuit. Be careful when measuring line voltage, be sure that the range switch is set to the proper voltage position.

(a) Set the function switch at AC (fig 13-1).

(b) Set the range switch at the desired voltage range position. When in doubt as to the actual voltage present, always use the highes tvoltage range as a protection to the instrument. If the voltage is within a lower range, the switch maybe set for the lower range to obtain a more accurate reading.

(c) Plug a test lead in the– COMMON jack and another test lead in the + jack.

(d) Connect the test leads across the voltage source.

(e) Turn on power in the circuit being measured.

(f) Read the value on the scale.

(2) Resistance measurement. The procedure for measuring resistance is outlined below.

(a) Prior to measuring a resistance, the VOM must be adjusted to zero. Turn range switch to desire ohms range (fig 13-2). Plug a test lead in the – COMMON jack and another test lead in the + jack. Connect ends of test leads to short the VOM resistance circuit. Rotate the ZERO OHMS control until pointer indicates zero ohms. If pointer cannot be adjusted to zero, one or both the VOM internal batteries must be replaced. Before measuring resistance be sure power is off to the circuit being tested. Disconnect the component from the circuit before measuring its resistance.

(b) Set the range switch to one of the resistance range Positions.

(c) Set the function switch at either – DC or + DC. Operation is the same in either position. Adjust ZERO OHMS control for each resistance range as described in (a).

(d) Observe the reading on the OHMS scale at the top of the dial. Note that the OHMS scale reads from right to left for increasing values of resistance.

(e) To determine the actual resistance value, multiply the reading by the factor at the switch position.

(f) If there is a "forward" and "backward" resistance such as in diodes, the resistance should be relatively low in one direction (for forward polarity) and higher in the opposite direction. Rotate the function switch between the two DC positions to reverse polarity. This will determine if there is a difference between the resistance in the two directions.

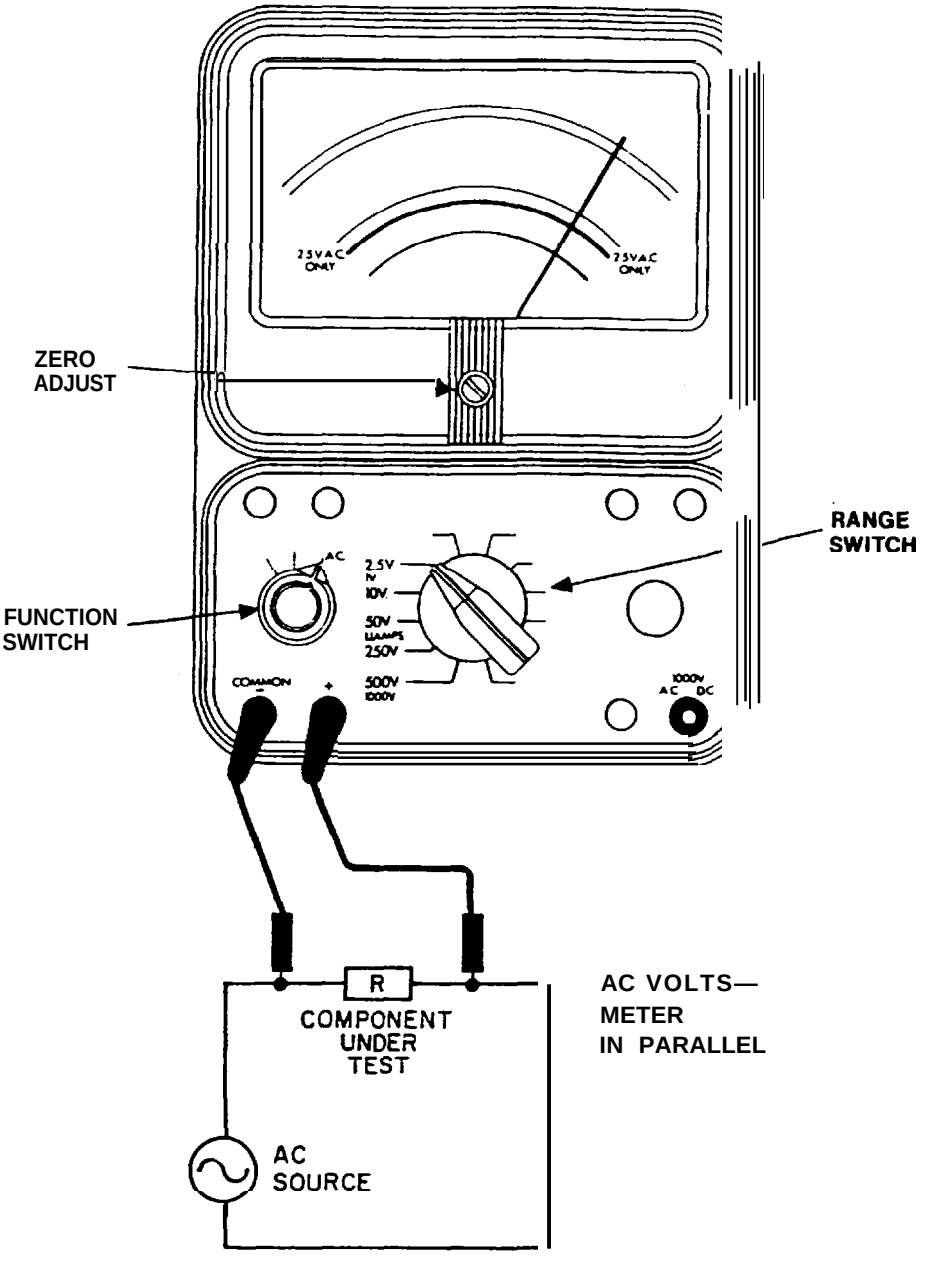

Figure 13-1. Set-up for measuring AC voltage.

13-3. Clamp-on volt-ammeter.

Most clamp-on volt-ammeters are designed to read alternating current only, although some types are available which will read direct current as well. Most are provided with plug-in leads so that the instruments can be used as voltmeters. Some models can also be used as ohmmeters. Refer to the manufacturer's instructions for operational procedures.

a. Application. Where a conductor is accessible at 600 volts or below, clamp-on volt-ammeters are used simply by clamping the instrument around insulated or noninsulated conductors. Thus with no interruption of service, the user may check motor loads and starting current for fractional-horsepower motors. Other applications include balancing polyphase systems, locating overloaded feeders, checking line voltages, trouble shooting fuse boxes and control circuits, repairing electrical appliances, and diagnosing miscellaneous operating problems. Although the clamp-on volt-ammeter is easy to use, care must be taken to obtain accurate readings. For example, be sure that the frequency of the circuit under test is within the range of the instrument. Many of these instruments are calibrated at 60 Hertz. Also, take care that stray magnetic fields do

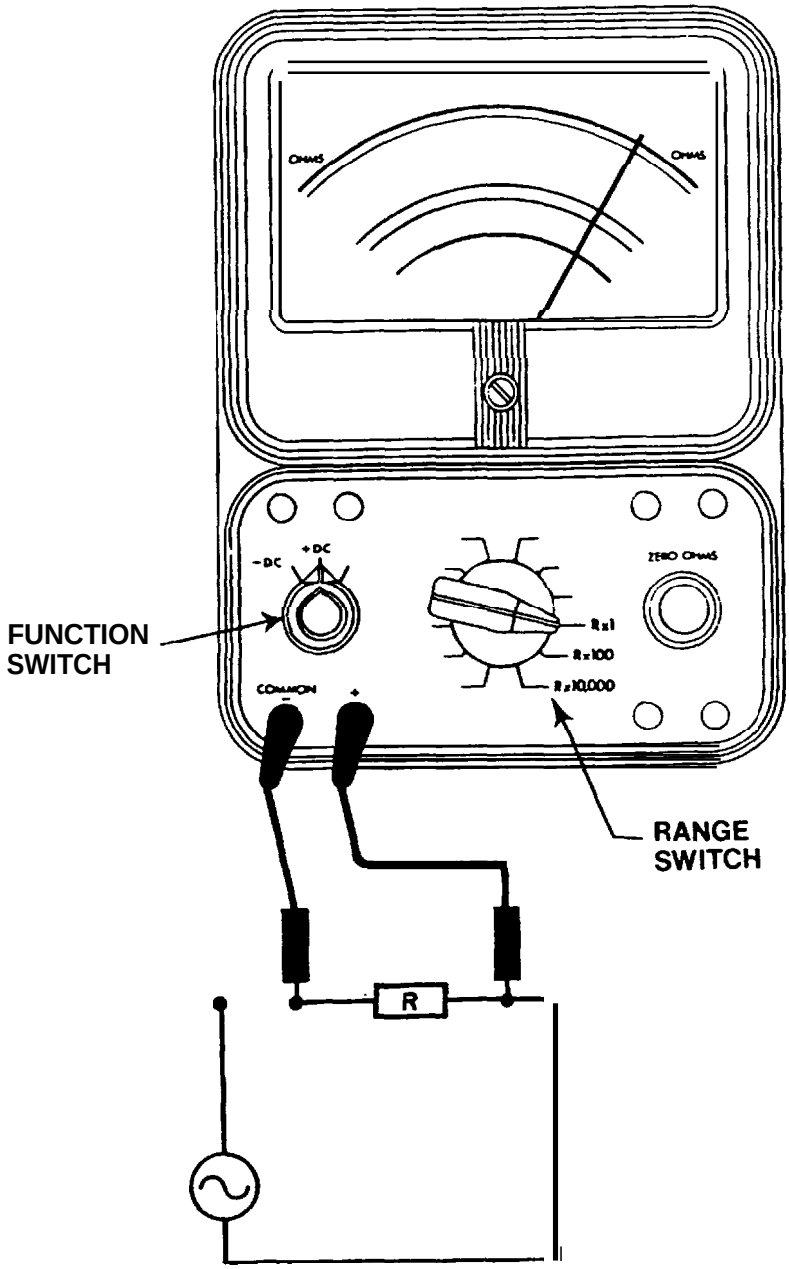

Figure 13-2. Set-up for measuring resistance.

not affect the current reading. When taking current readings, try to arrange conductors so that they are as far removed as possible from the conductor-under test. If testing is being done in a control panel, try to take the current readings at a location remote from relay magnet coils which could influence the accuracy of the reading. Also, avoid taking current readings on conductors at a point close to a transformer. Where a conductor is inaccessible at 600 volts or below, for instance in conduit or cable troughs, current can still be measured by using a current adapter in the fused disconnect switch. The cartridge-fuse type has three sets of adapters for various fuse sizes. The blade-fuse type is screwed onto the fuse holder in the switch box. The clamp-on ammeter function should not be used on pulsating dc because it will give erroneous readings.

b. Accessories. A clamp-on range extender permits the measurement of high currents beyond the range of the clamp-on volt-ammeter. The unit extends the current range ten times and allows an actual current reading of 1000 amps AC on the 0-100A meter scale. A current multiplier permits current measurement on low-current equipment. The device multiplies the load current by lx, 5x or 10x. A phase sequence indicating attachment is

used in conjunction with the voltmeter circuit of the clamp-on volt-ammeter. To determine phase sequence, the circuit voltage is first measured. Then connections are made as shown in figure 13-3. If the meter reading is higher than the original circuit voltage, the phase sequence is black-yellow-red. If the meter reading is below original circuit voltage the phase sequence is red-yellow-black.

13-4. Megohmmeter.

The megohmmeter is an instrument used to measure very high resistances (fig 13-4). The megger consists of a hand-driven direct-current generator and a meter to indicate resistance in ohms. The meter used is an opposed coil type, having two coils, A and B, mounted over a gapped core (fig 13-5). The coils are wound on a light frame, and rotate around the core which remains stationary. The current for the coils is supplied by the hand-driven generator. To explain the operation of the unit, it is necessary to examine the action of the coils with the earth and lien terminals open; with these terminals shorted; and with a resistance (Rx) across these terminals. When these terminals are open, current flow is from the generator, through B and R which are in series with the generator. Since the terminals are open, no current flows through coil A to oppose movement and coil B will swing counterclockwise to a position over the gap in the core. In this position the pointer indicates infinity. With the terminals shorted together, a larger current flows through coil A than through coil B and the greater force in coil A moves the pointer clockwise to the zero position on the scale. Resistor R' is a current limiting resistor which prevents damage to the meter in this situation. If a resistance is connected across the terminals, current flows through coil A, R' and the unknown resistance Rx. This current attempts to move coil A clockwise, but the opposing force created by current through coil B tries to move it counterclockwise. The final position of the coils is determined by the magnitude of the current through Rx' and the coils will stop at a point where the forces tending to move them are at a balance. The pointer then indicates the value of the unknown resistance on the scale. No springs are used in the movement since the opposing forces in coils A and B balance the pointer when a reading is being taken. Having no springs to hinder its movement, the pointer floats freely back and forth across the scale when the meter is not in operation. Megohmmeters may be obtained with different voltage ranges; the more common being 500 and 1000 volts. The higher the resistance range to be measured, the higher the voltage required to actuate the movement for reading. Friction clutches are used to hold the generator to its rated voltage output. In operation, these clutches are designed to slip if cranked over a certain rate of speed, thus dropping the output to a safe value.

a. Safety precautions. When operating a megohmmeter, a very high voltage is generated at the output terminals which could prove fatal. The following safety precautions should be adhered to when operating a megohmmeter.

(1) Take the equipment to be tested out of service. This involves de-energizing the equipment and disconnecting it from other equipment and circuits.

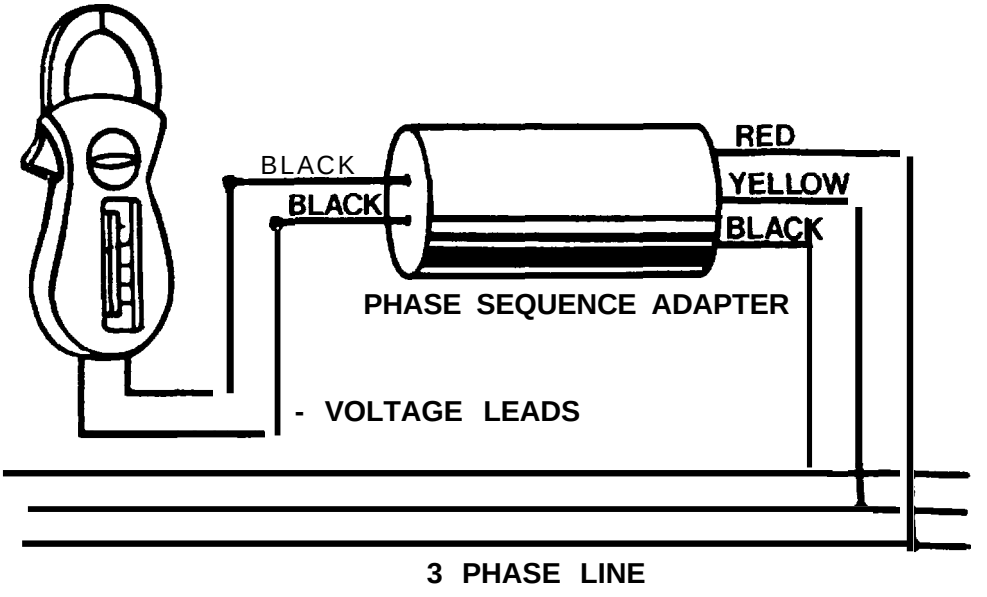

Figure 13-3. Setup for testing phase sequence.

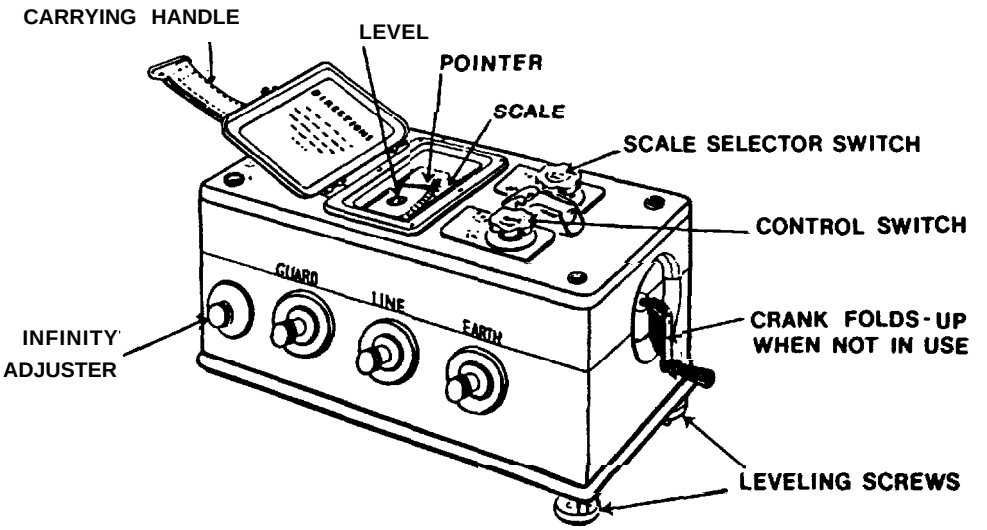

Figure 13-4. Megohmmeter.

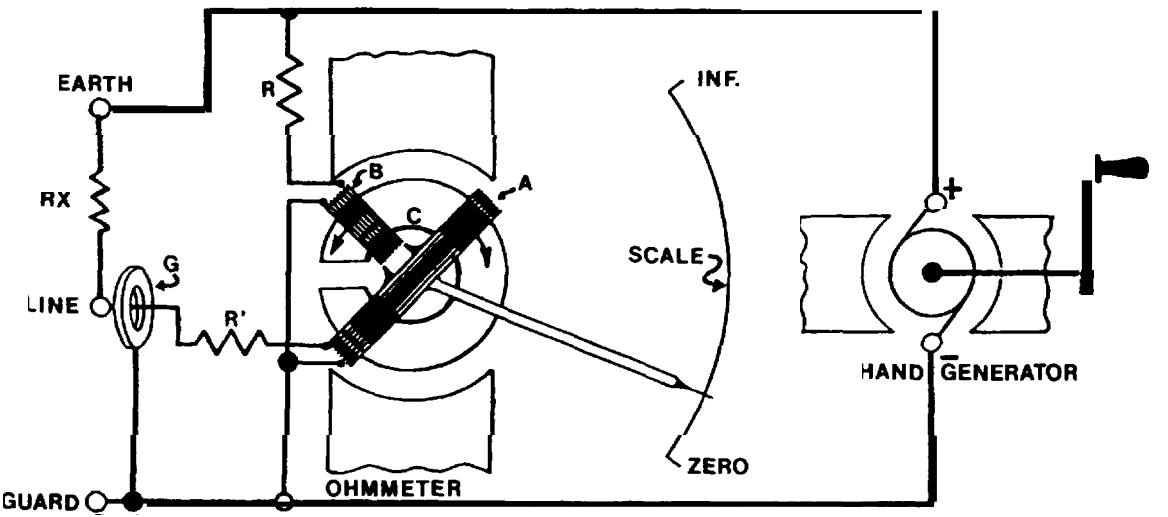

Figure 13-5. Diagram of megohmmeter connections.

(2) If disconnecting the equipment from the circuit cannot be accomplished, then inspect the installation to determine what equipment is connected and will be included in the test. Pay particular attention to conductors that lead away from the installation. This is very important, because the more equipment that is included in a test, the lower the reading will be, and the true insulation resistance of the apparatus in question maybe masked by that of the associated equipment.

(3) Test for foreign or induced voltages with a VOM (para 13-2). Pay particular attention once again to conductors that lead away from the circuit being tested and make sure they have been properly disconnected from any source of voltage.

(4) Large electrical equipment and cables usually have sufficient capacitance to store up a dangerous amount of energy from the test current. Therefore discharge capacitance both before and after any testing by short circuiting or grounding the equipment under test.

(5) Apply safety grounds.

(6) Generally, there is no fire hazard in the normal use of a megohmmeter. There is, however, a hazard when testing equipment is located in inflammable or explosive atmospheres. Slight sparking may be encountered when attaching test leads to equipment in which the capacitance has not been completely discharged or when discharging capacitance following a test. It is therefore suggested that use of a megohmmeter in an explosive atmosphere be avoided if at all possible. If testing must be conducted in an explosive atmosphere, then it is suggested that test leads not be disconnected for at least 30 to 60 seconds following a test, so as to allow time for capacitance discharge.

(7) Do not use a megohmmeter whose terminal operating voltage exceeds that which is safe to apply to the equipment under test.

b. Operation. The following are general directions for operating a hand-driven megohmmeter. For specific instructions, refer to the megohmmeter manufacturer's instructions. For megohmmeter connections when testing low voltage cables or motors, refer to paragraphs 6-3 and 4-5, respectively.

(1) Place the megohmmeter on a firm and level base. Avoid large masses of iron and strong magnetic fields.

(2) If the megohmmeter has a selector switch, set it to MEGOHMS + 1.

(3) Check infinity by turning the hand crank in a clockwise direction. The pointer should move promptly to infinity. This check is made with no connections to the test terminals. If the reading is not infinity, then use the INFINITY ADJUSTER to set the pointer to infinity.

(4) Check zero by short-circuiting the testing terminals. Turn the crank slowly. The pointer should move promptly to zero or off the lower end of the scale.

(5) Use well-insulated testing leads connected to the megohmmeter terminals and with opposite ends separated, turn the crank. If the pointer indicates less than infinity, there is a leak between the leads which must be removed before proceeding with tests. Touch together the test ends of the leads while turning the crank to make certain, by a zero reading, that the leads are not open-circuited.

(6) Apparatus to be tested must not be live. It must be taken out of service and disconnected electrically from all other equipment (para 13-4.1).

(7) Connect leads to apparatus to be tested. For testing to ground, connect from the LINE terminal to a conductor of the apparatus, and from the EARTH terminal to the frame of a machine, the sheath of a cable or to a good ground. For testing between two conductors, connect test leads to the two conductors.

(8) Turn the crank in the clockwise direction and observe the position of the pointer over the scale. It shows the value of the insulation resistance under test. Take the reading while operating and at a fixed time, preferably 30 or 60 seconds.

13-5. Harmonic measurements.

The increasing use of solid-state switching devices contributes to current wave forms which are nonsinusoidal. This distorted current wave form results in a distorted voltage waveform. This distorted wave form can be viewed as a fundamental 60 Hz sine wave with odd multiples of 60 Hz harmonics wave forms. Even harmonics are usuall, not present in an AC system, except under special circumstances. The common frequency range of harmonics is O-5 kHz with O-3 Khz being most common. If the harmonic levels are high, they may cause: interference to control and communication lines; heating of ac motors, transformers and conductors; higher reactive power demand and hence poor power factor; misoperation of sensitive electronics; overloading of shunt capacitors and, higher power loss. These harmonic currents will accumulate in the neutral conductor. Therefore, it is recommended that a double ampacity neutral conductor be used.

a. The purpose of harmonic measurements is:

(1) Monitoring existing values of harmonics and checking against recommended or admissible levels.

(2) Testing equipment which generates harmonics.

(3) Diagnosis and trouble-shooting situations where the equipment performance is unacceptable to the utility or to the user.

(4) Observations of existing background levels and tracking the trends in time of voltage and current harmonics (daily, monthly, seasonal patterns).

b. Basic equipment used for the measurement of nonsinusoidal voltage and currents. The techniques used for harmonics measurements differ from ordinary power system measurement. The harmonic measurements require more specialized instruments. Brief descriptions for three generic types of instruments used for harmonic measurements are included in this section.

(1) *Oscilloscope.* The display of the voltage wave-form on the oscilloscope gives immediate qualitative information on the degree and type of distortion. Sometimes cases of resonances are readily identifiable through the multiple peaks present in the current wave.

(2) *Spectrum analyzers. These* instruments display the signal as a function of frequency. A certain range of frequencies is scanned and all the components, harmonics and interharmonics of the analyzed signal are displayed. The display format may be a CRT or a chart recorder. For harmonic measurements, the harmonic frequencies must be identified by reference to the fundamental frequency. A wide range of analog and digital types of Spectrum Analyzers are available in the market.

(3) *Wave analyzers.* Harmonic analyzers or wave analyzers measure the amplitude (and also phase angle in more complex units) of a periodic function. These instruments provide the line spectrum of an observed signal. The cutput can be recorded or can be monitored with analogue or digital meters. An example of these is the Dranetz 636 disturbance wave analyzer. Again instruments with

a wide range of capabilities are available starting from printing results on a paper tape to automatic storing on a personal computer. Also several different manufacturers have similar instruments.

c. The use of harmonic measurement instruments and analyses of harmonic measurement results require more sophistication. Hence, it is recommended that outside resource and manpower is brought in for this type of work. Also if use of in-house personnel is desired, special training of those personnel is recommended before they are assigned to make such measurements.

13-6. Maintenance equipment guide.

Table 13-1 recommends the tool or piece of test equipment that should be used for a particular application.

CHAPTER 14

TEST METHODS

14-1. Test evaluation.

The tests listed in this chapter are most commonly performed to determine the condition of low voltage equipment. If a testing program is to provide meaningful information, all tests must be conducted in a proper manner. All conditions which would affect the evaluation of these tests must be considered with any pertinent factors recorded. The test operator must be thoroughly familiar with the test equip ment used and should also be able to detect any equipment abnormalities or questionable data during the performance of the test. To provide optimum benefits, all testing data and maintenance actions must be recorded. The data obtained in these tests provide information which:

a. Determines whether any corrective maintenance or replacement is necessary or desired.

b. Ascertains the ability of the element to continue to perform its design function adequately.

c. Charts the gradual deterioration of the equipment over its service life.

14-2. Insulation testing.

Insulated electric wire is usually made of copper or aluminum (which is known to be a good conductor of the electric current) conductor with appropriate insulation for the rated voltage. The insulation must be just the opposite from a conduction it should resist current and keep the current in its path along the conductor. The purpose of insulation around a conductor is much like that of a pipe carrying water (fig 14-1). Pressure on water from a pump causes flow along the pipe. If the pipe were to "spring a leak", water would spout out; you would waste water and lose some water pressure. With electricity, "voltage" is like the pump pressure causing electricity to flow along the copper wire. As in a water pipe, there is some resistance to flow, but it is much less along the wire than it is through the insulation. Insulation, with a very high resistance, lets very little current through it. As a result, the current follows a "path of least resistance" along the conductor. The failure of an insulation system is the most common cause of problems in electrical equipment. Insulation is subject to many effects which can cause it to fail; such as, mechanical damage, vibration, excessive heat, cold, dirt, oil, corrosive vapors, moisture from processes, or just the humidity on a muggy day. As pin holes or cracks develop, moisture and foreign matter penetrate the surfaces of the insulation, providing a low resistance path for leakage current. Sometimes the drop in insulation resistance is sudden, as when equipment is flooded. Usually, however, it drops gradually, giving plenty of warning, if checked periodically. Such checks permit planned reconditioning before service failure. If there are no checks, a motor with poor insulation, for example, may not only be dangerous to touch when voltage is applied, but also be subject to bum out. Current through and along insulation is made up of three components (fig 14-2): capacitance charging current; absorption current; and conduction or leakage current. The total current is the sum of the three components and it is this current in terms of megohms at a particular voltage that can be measured directly by a megohmmeter. Note that the charging current disappears relatively rapidly, as the equipment under test becomes "charged". Larger units with more capacitance will take longer to be charged. This current also is the stored energy initially discharged after your test, by short-circuiting and grounding the insulation. You can see further that the absorption current decreases at a relatively slow rate, depending upon the exact nature of the insulation. This stored energy, too, must be released at the end of a test, and requires a longer time than the capacitance charging current-about four times as long as the voltage was applied. With good insulation, the conduction or leakage current should build up to a steady value that is constant for the applied voltage. Any increase of leakage current with time is a warning of trouble. With a background now of how time affects the meaning of instrument readings, let's consider two common test methods: (1) short-time of spot reading and (2) time-resistance tests.

a. Short-tin or spot-reading test. In this method, connect the megohmmeter (para 13-4) across the insulation to be tested and operate it for a short, specific timed period (60 seconds usually is recommended). Commonly used DC test voltages for routine maintenance are as follows:

Equipment AC Rating	*DC Test Voltage*
up to 100 volts	100 and 250 Volts
440 to 550 volts	500 and 1,000 Volts

Bear in mind also that temperature and humidity, as well as condition of your insulation affect your reading. Your very first "spot reading" on equipment, with no prior test, can be only a rough guide

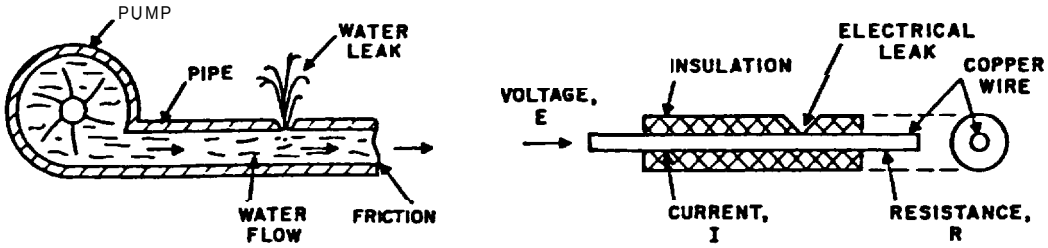

Figure 14-1. Comparison of water flow with electric current.

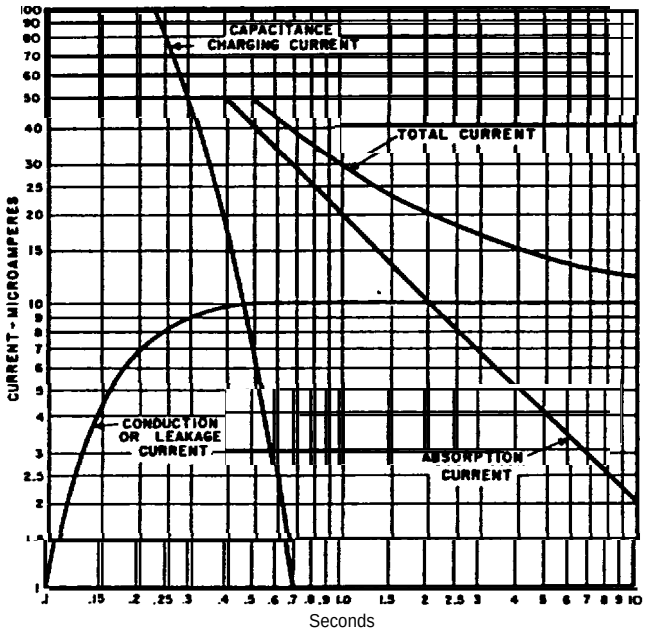

Figure 14-2. Curves showing components of measured current during insulation testing.

as to how "good" or "bad" is the insulation. By taking readings periodically and recording them, you have a better basis of judging the actual insulation condition. Any persistent downward trend is usually fair warning of trouble ahead, even though the readings may be higher than the suggested minimum safe values. Equally true, as long as your periodic readings are consistent, they may be O.K., even though lower than the recommended minimum values. You should make these periodic tests in the same way each time, with the same test connections and with the same test voltage applied for the same length of time. In table 14-1 are some general observations about how you can interpret periodic insulation resistance tests, and what you should do with the result.

b. Time-resistance method. This method is fairly independent of temperature and often can give you conclusive information without records of past tests. It is based on the absorption effect of good insulation compared to that of moist or contaminated insulation. You simply take successive readings at specific times and note the differences in readings. Tests by this method are sometimes referred to as absorption tests (fig 14-3). Test voltages applied are the same as those listed for the spot-reading test. Note that good insulation shows a continual increase in resistance over a period of time. If the insulation contains much moisture or contaminants, the absorption effect is masked by a high leakage current which stays at a fairly constant value-keeping the resistance reading low. The time-resistance test is of value also because it is independent of equipment size. The increase in resistance for clean and dry insulation occurs in the same manner whether a motor is large or small. You can, therefore, compare several motors and establish standards for new ones, regardless of their horsepower ratings. The ratio of two time-resistance readings is called a Dielectric Absorption Ratio. It is useful in recording information about insulation. If the ratio is a ten minute reading divided by a one minute reading, the value is called the Polarization Index. Table 14-2 gives values of the ratios and corresponding relative conditions of the insulation that they indicate.

Table 14-1. Interpreting insulation resistance test results.

CONDITION	WHAT TO DO
1. Fair to high values and well-maintained.	No cause for concern.
2. Fair to high values, but showing a constant tendency towards lower values.	Locate and remedy the cause and check the downward trend
3. Low but well-maintained.	Condition is probably all right, but cause of low values should be checked.
4. So low as to be unsafe.	Clean, dry-out, or otherwise raise the values before placing equipment in service (test wet equipment while drying out).
5. Fair or high values, previously well-maintained, but showing sudden lowering.	Make tests at frequent intervals until the cause of low values is located and remedied; or until the values have become steady at a lower level but safe for operation; or until values become so low that it is unsafe to keep the equipment in operation.

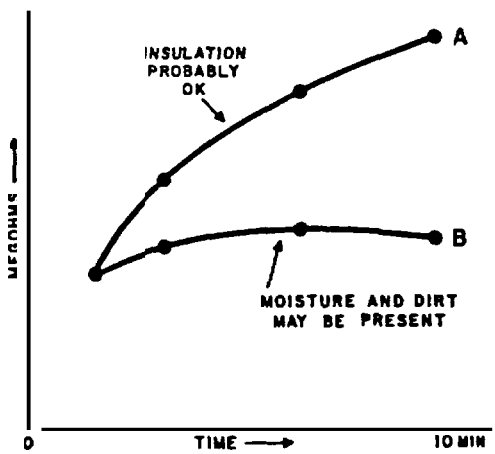

Figure14-3. Typical curves showing dielectri absorption effecting a time-resistance or double-mading test.

14-3. Protective relay testing.

Protective relays are used to detect and isolate system abnormalities with minimum disturbance to the rest of the electrical distribution system. The more common protective relays are the electro-mechanical types. In them, a mechanical element, such as an induction disk or magnetic plunger, moves in response to an abnormal change in a parameter of the eletrical system. This movement causes a contact in the control circuit to operate, tripping the circuit breaker. Protective relays should be maintained (in a 12- to 24-month maintenance cycle depending upon local operating and manpower conditions) to ensure their reliable performance. (See Section 15.5 of ANSI/IEEE Std 242-1986.)

a. Relay maintenance. The steps to take for relay maintenance are:

(1) The technician must understand the construction, operation and testing of the particular relay.

(2) The relay manufacturer's instruction bulletin should be available.

(3) The technician should be given the settings to be applied to each particular relay, and the test points. This data is often furnished on a time-current characteristic curve of a coordination study.

(4) A test instrument should be available as recommended by the manufacturer.

(5) Most protective relays can be isolated for testing while the electrical system is in norma operation. However, an operation of the breaker is required to ascertain that the operation of the relay contacts will trigger the intended reaction, such as to trip the associated circuit breaker.

b. The tests to be performed are determined by the relay to be tested. For electro-mechanical relays, inspection, testing and adjustment are recommended.

(1) *Inspection.* Each relay should be removed from its case for a thorough inspection and cleaning.

Table 14-2. Condition of insulation indicated by dielectric absorption ratios.

INSULATION COORDINATION	60/30-SECOND RATIO	10/1-MINUTE RATIO (POLARIZATION INDEX)
Dangerous		Less than 1
Questionable	1.0 to 1.25	1.0 to 2
Good	1.4 to 1.6	2 to 4
Excellent	Above 1.6 **	Above 4 **

*These values must be considered tentative and relative - subject to experience with the time-resistance method over a period of time.

**In some cases, with motors, values approximately 20% higher than shown here indicate a dry brittle winding which will fail under shock conditions or during starts. For preventative maintenance, the motor winding should be cleaned, treated, and dried to restore winding flexibility.

If the circuit is in service, remove one relay at a time so as no to totally disable the protection. Before the relay cover is removed, excessive dirt, dust and metallic material deposited on the cover should be noted and removed.Removing such material will prevent it from entering the relay when the cover is taken off. The presence of such deposits may indicate the need for some form of air filtering at the station. "Fogging" of the cover glass should be noted and cleared. Such fogging is, in some cases, a normal condition due to volatile materials being driven out of coils and insulation. However, if the fogging appears excessive, further investigation is necessary. A check of the ambient temperature and the supplied voltage and current must be compared to the nameplate or manufactured instruction book ratings.

(2) *Electrical tests.* Manually close (or open) the relay contacts and observe that they perform their required function; i.e., trip a breaker, reclose a breaker, etc. Apply prescribed settings or ascertain that they have been applied to the relay. Gradually apply current or voltage equal to the tap setting to the relay to verify that the pickup is within specified limits. If miscalibrated, the restraining spiral spring can be adjusted. The data that this test yields should be compared to previous data. Reduce the current or voltage until the relay drops out or resets fully. This test will indicate excess friction. Should the relay be sluggish in resetting or fail to reset completely, then the jewel bearing and pivot should be examined. A magnifying glass is adequate for examining the pivot, and the jewel bearing can be examined with the aid of a needle which will reveal any cracks in the jewel. Should dirt be the problem, the jewel can be cleaned with an orange stick while the pivot can be wiped clean with a soft, lint-free cloth. No lubricant should be used on either the jewel or pivot. Should evidence of overheating be found, the insulation should be checked and if brittle replaced. Withdrawal of the connection plug in drawout relays may reveal evidence of severe fault currents or contaminated atmospheres, either of which may indicate that a change in the maintenance schedule is necessary.

(3) *Mechanical adjustments.* All connections should be tight. If several connections are loose, excessive vibration may be indicated, and should be corrected. All gaps should be free of foreign materials, if not, inspection of the gasket is necessary. Contact gaps should be measured and the values compared with pervious measurements. Should there be a large variation in these measurements, excessive wear may be indicated, in which case the worn parts should be replaced. It may also be found that an adjusting screw has worked loose and must be retightened. This information should be noted on the test record. All contacts, except those not recommended for maintenance, should be burnished and measured for alignment and wipe. Relays that operate after a time delay when subjected to an overcurrent condition should have an operating time test performed. This test is made anywhere from two to ten times tap setting. The time it takes the relay to trip must coincide with the manufacturer's recommended operating times. If not, then relay adjustments should be made, if possible and the relay retested. Readjustments may be necessary until the

relay operates within acceptable limits. Tests should be made with the relay in its panel and case, and the time tests run at the calibrated setting. For precise testing procedures, manufacturer's instructions should be consulted. Some protective relays operate instantaneously; that is, with no intentional time delay. They should be set by test. Most types of protective relays have a combination target and seal-in unit. The target indicates that the relay has operated; the seal-in holds the relay contacts closed. It should be verified that the target is functional and that the relay will seal-in with the minimum specified DC current applied to the seal-in unit.

14-4. Equipment ground resistance testing.

An equipment ground is a connection to ground from one or more noncurrent-carrying metal parts of the equipment (para 8-2b). Instrument are available to determine if the grounding path is continuous and has sufficiently low resistance. When using these instruments, one should remember that although a high resistance value is an indication of a problem, for example a loose connection or excessive conductor length, a low resistance reading does not necessarily indicate the adequacy of the grounding path. A grounding path that is found to have a low resistance may not have sufficient capacity to handle large ground faults. Visual examinations and torquing connections are still needed to determine that adequacy of the grounding path.

14-5. System ground resistance testing.

A system ground is a connection to ground from one of the current-carrying conductors (para 8-2c). An adequately grounded system is necessary to provide for ground fault protections and to reduce the hazards of fire and shock to personnel. A system ground or earth resistance test has been developed to determine the effectiveness and integrity of the grounded system. Periodic testing is recommended based upon the importance of the ground system. The current flowing through an earth electrode encounters three basic resistive components: electrode; electrode-to-earth; and earth (fig 144). The earth resistance is the largest of the three resistance components. The earth resistance depends on the following:

a. Type of soil. As the soils composition varies so does the corresponding resistance values. Also as the soil becomes more closely packed, the resistance becomes less.

b. Moisture and temperature of soil. When a soil dries out, or its temperature is lowered, the soils resistance value increases (figs 14-5 and 14-6). Therefore, resistance values measured will vary with the seasons, and one earth resistance reading alone with not guarantee a safe earth ground.

c. *Grounding system. As* the grounding electrode is placed further into the earth the ground resistance decreases (fig 14-7), and there is less resistance change due to temperature and moisture variations. Changing the diameter of the electrode has little effect on ground resistance. An electrode (fig 148) is pictured surrounded by hemispheres of equal thickness and composed of the same type of soil. Each additional hemisphere away from the electrode increases in area. As the hemisphere's area increases, the resistance decreases- In effect, the earth resistance is the sum of all the hemisphere resistances. A point will be reached where the addition of new hemispheres will not effectively change the total resistance. This will be the value of the earth resistance.

(1) *Precautions.* All earth resistance testing methods can involve hazards to the operator. Precautions should be taken as follows:

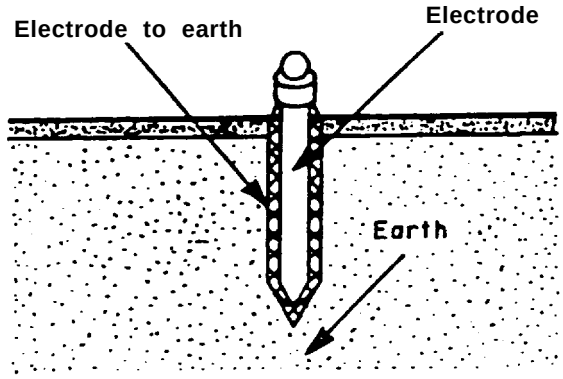

Figure 14-4. Resistive components of a made electrode.

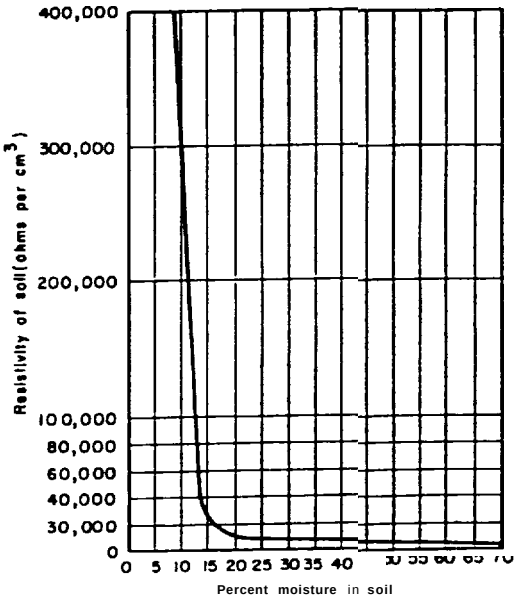

Figure 14-5. Soil resistivity vs. moisture content of red clay soil.

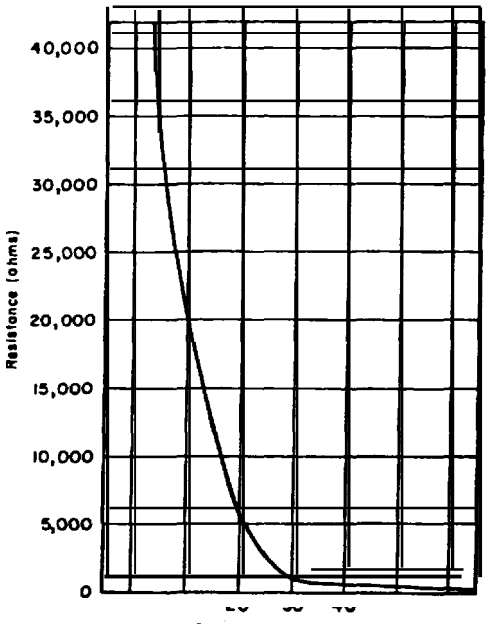

Figure 14-6. Soil resistance vs. temperature of clay soil.

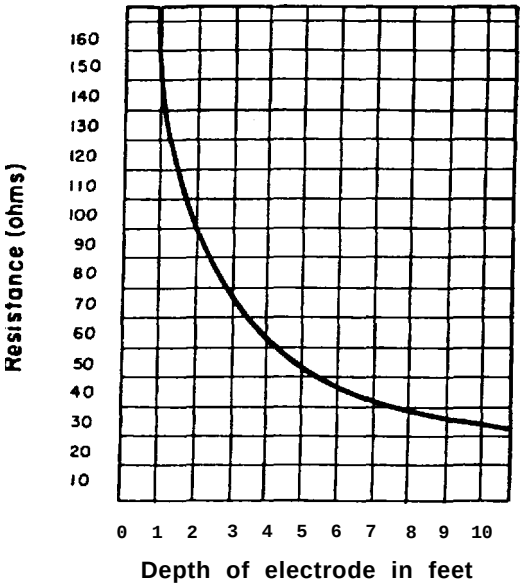

Figure 14-7. Soil resistance vs. depth of electrode.

(a) When testing earth resistance, remember that during fault conditions, dangerous voltages may exist between a system ground and a remote point being tested. Care should be taken when connecting leads and test equipment, Avoid as much contact with the leads and probes as possible.

(b) Most of the earth resistance is located close to the grounding system due to the "hemisphere effect". When a ground fault occurs, the majority of the voltage drop is close to the system. Caution should be used when approaching a live ground.

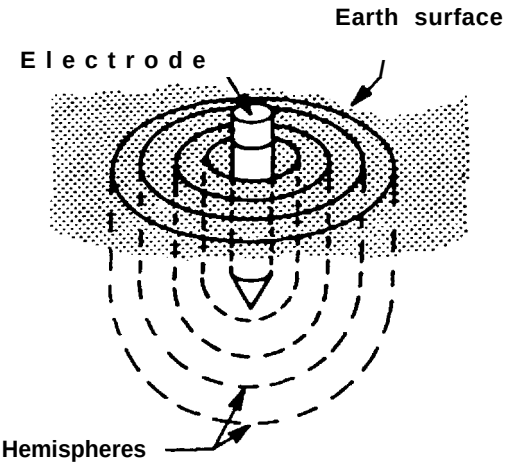

Figure 14-8. Earth electrode with hemispheres.

(c) At stations where the fence is not connected to the station ground, a dangerous voltage can develop under fault conditions between the fence and station ground. Do not touch both at the same time.

(d) Surge and switching effects in transmission lines may induce dangerous spikes in the test leads strung under the line. Care should be exercised in handling these test leads.

(e) Tests should not be performed during a thunderstorm.

(2) *Protection.* Rubber gloves, boats, an insulated platform, etc., capable of protecting the operator against full-line voltage, are recommended for protection.

(3) *Fall-of-potential method.* The fall-of-potentiaI method is probably the most widely used and accepted of all methods available. It can be used most practically on small and medium sized systems. A ground resistance test set is used. Measure the earth resistance of the earth system (E) (fig 14-9). In this method, greater pin spacing is required for testing ground grids and multiple rod installations than for single rod testing. To accomplish this, current is supplied between the current electrode (CE) and the system E under test. A voltmeter measures the voltage drop between the potential electrode (PE) and the system. By moving the potential electrode between E and CE, various voltages will be recorded and corresponding resistance values found. When the resistance values are plotted versus distance, the earth resistance can be seen to increase as the potential electrode moves away from the system ground, but at a decreasing rate of change. This results because each new outer hemisphere of earth around the system E adds a smaller amount of resistance to the total earth resistance as previously discussed. At a point, usually

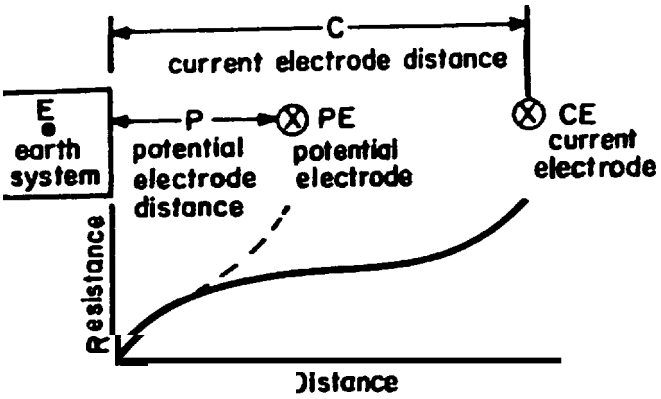

Figure 14-9. Fall-of-potential method graph.

about 62 percent of the total distance between the current probe and the system, the earth resistance should become almost constant. This is the point where the earth resistance of the system is most accurate.

14-6. Battery specific gravity test.

Great care should be exercised when sampling and handling battery electrolyte. Since it may contain acid it can cause irritation if it comes in contact with the skin, and could cause blindness if it were splashed in the eye. Electrolyte is also a conductor and can cause short circuits if splashed over the cell terminals. When specific gravity of a battery is being measured, wear acid resistant eye protection, gloves and apron. It is also available to wear rubber slippers or boots when working with batteries. When sampling the cells' electrolyte:

a. Place a hydrometer tube (or hose) firmly into the mouth of the cell electrolyte withdrawal tube (fig 14-10).

b. Slowly squeeze the hydrometer bulb so as to force air into the withdrawal tube, clearing it of electrolyte.

c. Release hand pressure on the hydrometer bulb allowing electrolyte to draw up into the glass barrel of the hydrometer. Sufficient electrolyte must be withdrawn to allow the hydrometer float to float freely.

d. The hydrometer must be held vertical such that the float is free and not in contact with the sides of the hydrometer barrel.

e. With hydrometer floating freely, read and record the float scale point at the true liquid level (fig 14-11). The level at point A is 1.210; at point B, where the float is lower in the liquid, the reading is 1.183.

14-7. Infrared inspection.

Infrared thermography is the process of making inframed radiation visible and measurable. This radiation is emitted by all objects as heat, which is constantly being absorbed and re-emitted by everything including ourselves. When an electrical connection is loose or corroded, it is said that the conductor has developed a high resistance connection. A high resistance connection produces heat which can be detected through infrared thermography. Loose connections should be tightened and corroded connections cleaned. Cables with poor insulation should be repaired or replaced. Infrared inspections of electrical equipment help to reduce the number of costly and catastrophic failures and unscheduled shutdowns. Such inspections performed by qualified and trained personnel on energized equipment may uncover potentially dangerous situations. Proper diagnosis and remedial action have also helped to prevent major losses. The instruments most suitable for infrared inspections are of the type that use a scanning technique to produce an image of the equipment being inspected. These devices display a picture, where the "hot spots" appear as bright spots. Infrared surveys may be performed by military facilities personnel if they own infrared imaging instruments and adhere to the manufacturer's instructions. Routine infrared surveys should be performed at the very least every year during periods of maximum possible loading. These surveys should be well documented and if critical, impending faults exist, the electrical supervisor should be notified and corrective actions taken.

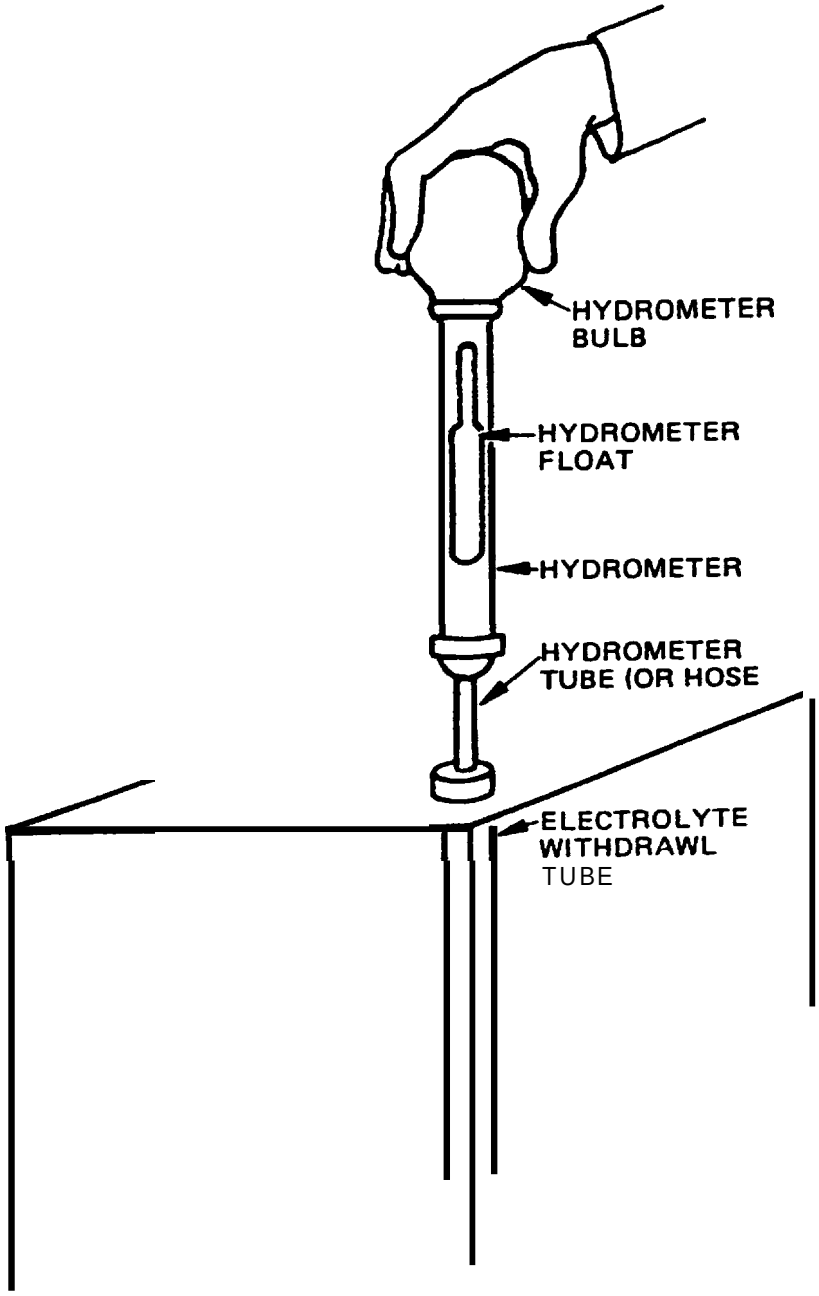

Figure 14-10. Sampling the cell electrolyte.

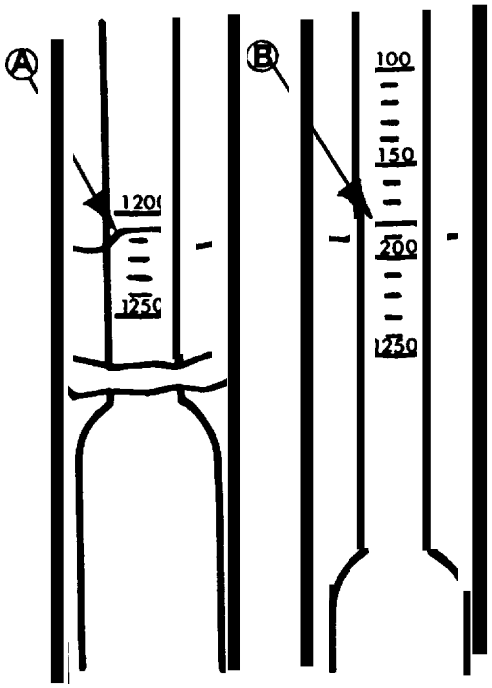

Figure 14-11. Reading the hydrometer flint.

CHAPTER 15

MAINTENANCE SCHEDULES

15-1. Personnel.

This chapter sets up timetables for maintenance actions. Whenever the electrical shop/electrician or the electrical supervisor is mentioned, it refers to the appropriate shop or individual responsible to the facilities engineer, the public works officer, the base civil engineer or to the appropriate individual having responsibility for the maintenance of real property facilities. The user or using service is the occupant actually benefiting from the service. The maintenance group consists of personnel who are responsible for the routine scheduled maintenance of real property facilities. This group may or may not have affiliated electrical personnel. The operator has the responsibility for starting, operating and securing the equipment when not in use.

15-2. Responsibilities.

The responsibility for maintenance of all real property electrical items will be assigned to the electrical shop/electrician. For example, the electrical shop/electrician is responsible for electric motors and pertinent controls that power such equipment as air conditioners, boilers and water pipes, even though the overall responsibility for the powered equipment is assigned to other shops. While most of the electrical maintenance will be accomplished by personnel in the electrical shop/electrician, it is often more logical and economical to have certain tasks, particularly preventive maintenance, accomplished by other personnel. Such tasks will be determined by the electrical supervisor who, through coordination and inspection, assures adequacy of the work performed. Often the user or other shops have the capability to perform periodic electrical maintenance. For example, air conditioning mechanics generally have the capability to service motors and controls associated with their responsibilities. In designating tasks for others, the electrical supervisor will be guided by their capabilities. In tables 15-3 and 15-4 entries in the column headed "responsibility" indicate the suggested groups that might be expected to perform the listed maintenance work at typical military installations. These suggested assignments may be changed to suit local conditions and capabilities.

15-3. Frequencies and procedures.

Of many factors involved in reliability of equipment, timely and high quality preventive maintenance are very important. A properly developed and implemented electrical preventive maintenance program minimizes equipment failure. However, performing maintenance at too frequent intervals is expensive, both in labor and material costs, but sometimes this can also cause failure. Thus there is a general optimum interval between scheduled preventive maintenance instances. Table 15-1 lists the data regarding percentage of failures since last maintenance. From this table, the following conclusions regarding maintenance frequency can be drawn.

a. One year or less interval for scheduled maintenance of all electrical equipment combined as a general rule is desirable.

b. One year interval for circuit breaker is appropriate.

c. Two year interval for motors (DC motors may need more frequent maintenance compared to AC motors) should be sufficient (bearings may need more attention).

d. Two year interval for transformers.

e. This interval needs to be adjusted for specific equipment, type of duty, operating environment and quality of maintenance. Quality of maintenance can be factored into the failure rate by using multipliers shown in table 15-2. For example, poor quality of motor maintenance will double (1.97 in table 15-2) its failure rate for the same maintenance interval, whereas perfect maintenance reduces the failure rate (given in table 15-4) by 16 percent. The preventive maintenance inspection and service frequencies that follow (tables 15-3 and 15-4) are guides which may be modified to meet local requirements. Whenever manpower constraints prevent the facilities manager in following the suggested maintenance frequency, procuring outside contractors is an option. However, if budgetary constraints make this an impossible task, then maintenance should be scheduled as close to the suggested interval as possible. Exceptions should not be made for maintaining equipment and facilities which serve critical loads and functions. The maintenance group or user should immediately report any defects beyond their repair capability to the electrical shop/electrician. They should keep records of all defects in the system and corrective actions taken to repair these defects. The table inputs are self-explanatory. The references are to sections in this manual covering procedures of inspections and maintenance.

Table 15-1. Percentage of failure caused since maintained.

Failure (months since maintained)	All Electrical Equipment Classes Combined	Circuit Breakers	Motors Wire	Open	Transformers
Less Than 12 months ago	7.4%	*12.5%	8.8%	*0	*2.9%
12-24 months ago	11.2%	19.2%	8.8%	*22.2%	2.6%
More than 24 months ago	36.7%	77.8%	44.4%	38.2%	36.4%
Total	16.4%	20.8%	15.8%	30.6%	11.1%

*small sample size; less than 7 failures caused by inadequate maintenance.

Table 15-2. Equipment failure rate multipliers versus maintenance quality.

Maintenance Quality	Transformers	Circuit Breakers	Motors
Excellent	0.95	0.91	0.89
Fair	1.05	1.06	1.07
Poor	1.51	1.28	1.97
All	1.00	1.00	1.00
Perfect Maintenance	0.89	0.79	0.84

Tables 15-1 and 15-2 reproduced here from ANSI/IEEE Std 493-1980, IEEE Recommended Practice for Design of Reliable Industrial and Commercial Power Systems, copyright C 1985 by The Institute of Electrical and Electronics Engineers, Inc., with permission of the IEEE Standards Department.

Note: The Navy will follow inspection and service frequencies as established in this section. Modifications will be made as required by NAVFAC MO-322, Inspection for Maintenance Public Works and Public Utilities, and Volume 2, Inspection Guides-Electrical.

Table 15-3. Interior wiring and lighting system.

RESPONSIBILITY	FREQUENCY	CHECK	REF.
Maintenance Group (Operator/ Electricians	Each scheduled building visit	Unauthorized or nonstandard attachments	
		Defective convenience outlets and switches.	
		Improper cords.	
		Proper fuse sizes in panels.	5-4-4
		Overheating of panels.	
		Any condition likely to cause fire. Check battery-type emergency lights and replacement lamps.	
		Check for Iamps larger than standard prescribed for outlet.	9-7
		Replace burnt out lamps in hard-to-reach places. (To be accomplished by electrical shop if special equipment such as ladder trucks are needed).	9-6
User	As Required	Panels for circuit idenificaton and accessibility.	5-4-1
		Replace blown fuses.	5-4-4
		Replace burnt out or defective incandescent lamps.	9-6
		Replace burnt out fluorescent lamps if personnel have been instructed in this function and if assigned to user. Promptly replace or report defective lamps since a lamp approaching bum out flashes on and off, causing overduty on auxiliary equipment.	9-6
Electrician	As required.	Make repairs **and** adjustments to systems when malfunctions are reported. Ensure that all work complies with the NEC	
Electrician	As required.	Check ground resistance for special weapons facilities at request of user.	14-5
		Check for low voltages and/or low power factor.	13-2
Electrician	Monthly or Annually	Inspect station (substation switchgear or UPS) as follows:	
		(1) Check electrolyte level and add distilled water if needed. (2) Check charging rate. Adjust charging rate as necessary to maintain proper specific gravity. (3) Test for proper operation under simulated power interruption. Check maintenance free batteries. Check voltage, check and clean terrminal/connection.	2-8-3

Table 15-3. Interior wiring and lighting system-continued.

RESPONSIBILITY	FREQUENCY	CHECK	REF.
Electrician	As required	Infrared scan, if available, and inspect buildings for defective wiring and loose connections. Tighten or replace, as necessary. Check grounds for continuity. Check all systems for abnormal conditions. Correct discrepancies.	14-4
		Inspect disconnects, cabinets, panels and load centers. Tighten connectionss. Clean panels. Check fuse sizes. Manually operate switches and breakers.	chapter 5
		Use ohmmeter to detect grounds. Eliminate defects.	13-2
		Check and correct unbalance of loads	
		Clean transformers, ducts and capacitors.	chapter 3, 24, 2-8-2.
Electrician	As required	Clean lighting fixtures whenever foot-candle readings drop 20 to 25%. This will beat approximate ly annual intervals in ordinary offices, longer in clean rooms, and at lesser intervals for dirty areas. Work should be accomplished by custodial or by user if within capabilities.	9-5
Electrician	Every Year	Test power circuit breakers and protective relays	2-8-8
		Test metering and indicating instruments	2-8-4, 2-8-5, 2-8-7
Electrical Shop	Every 5 years	Test molded case feeder and main circuit breakers in main panelboards.	5 4 3
		Test single phase watt hour meters.	2-8-5

Table 15-4. Electric motors and controls.

RESPONSIBILITY	FREQUENCY	CHECK	REF.
M intenance roup	As Required	Report any unusual conditions. Clean and lubricate those motors assigned to the team for this purpose	
User	As Required	Kcep area around motors free from obstructions. Report any: (1) Unusual noises (2) Overheating (3) Accumulation of dust and moisture (4) Sparking (5) Difficulty in coming up to speed	4-4
Operator	Weekly	Check oil level on sleeve bearing motors with oil gages. Fill, if necessary. Add oil and check only when motor is stopped. Check belts for suitable slack.. Adjust as necessary.	4-2-5-2-2
Electrician	Aa required	Check brushes in holders for fit and free play. Tighten brush studs. Replace brushes if necessary. Inspect commutator for high mica. glaze, roughness or scratches. Check for vibration. Check shunt, series, and commutating fields or tightness. Check cable connections. Check for bearing wear. Lubricate ball bearings.	4-342 4-343 4 4 4 4-3 4-2-s-2-1
Electrician	Annually	Measure insulation resistanc e on motars over 10 hp. Check winding insulation for cracks or other defects. Make sure windings are dry.	4-2-5-3
Electrician	Annually	Check air gap between rotor and stator on motors over 1 horsepower. Use long feeler gages for this purpose. A record of yearly checks will give a picture of bearing wear. A variation of 10 percent from one year to the next is permissible.	4-2-5-1
Ope tor	Quarterly	Cheek belts to insure that they are no tighter than necessary to insure against slipping. Check chains for evidence of wear.	4-4-3
Operator	Annually	Maintain proper alignment between motor and machine that it drives. Check motor to see that end thrust is not excessive and shaft has a reasonable axial float. Lubricate motors. Flush and refill oil reservoirs. Use lubricants recommended by equipment manufacture. Frequency of lubrication depends on usage of motors. Grease lubricated ball or roller bearing motors may require lubrication only once a year if motor is operated lightly, but as often as every 2 months if hard driven. Do not mix greases of different type or specifications.	4-4-4 4-4-4 4-2-5-2

Table 15-4. Electric motors and controls-continued.

RESPONSIBILITY	FREQUENCY	CHECK	REF.
Electrical Shop	Annually	Inspect brushes and holders. Adjust spring tension. Do not attempt to correct uneven feed by bending springs. Replace springs if necessary. Brushes normally last for approximately 2,500 hours. Maintain spare brushes for quick availability to electric shop at all hours.	4-3-4-2
Electrician	Annually	Inspect commutator. Sand with No. 00 sandpaper, grind or turn down commutator as necessary to eliminate grooving. DO NOT use emery cloth! Cut down high mica below level of commutator so brushes make contact with commutator bars.	4-3-4-3
		Inspect squirrel case rotors for broken or loose bars. Check for loose or missing fan blades. Inspect wound rotors and clean thoroughly around collector rings. Refinish pitted, spotted or eccentric rings. Make sure wedges over coils are tight.	4-2
		Make a load test. Compare actual line current with nameplate rating. Use a clamp-on ammeter for this purpose.	
		Clean and blow out windings (or use vacuum cleaner), wipe all dust from motor housing and commutators. Air pressure should be less than 50 pounds. Hand bellows are particularly useful.	4-4
		Inspect starters and branch circuit overcurrent protective devices (fuses, heaters, circuit breakers) to insure proper size ratings.	4-3
		Inspect contacts for wear. Clean and replace if necessary.	5-4
		Check for loose connections, corrosion, freedom of movement of parts, heating, wear, contact pressure, condition of shunts and arc chutes, unusual noises. Correct defective conditions.	5-4-6-1 5-4-6-2 5-4 5-5
Electrician	Annually	Inspect coils to determine if operated at rated voltage.	5-4-6-4
		Clean and remove dirt or gum from starters and disconnect device.	5-4
Electrician	Every 2 years	Test protective devices.	5-4-3 5-4-4

APPENDIX A

REFERENCES

A-1. Government Publications

Department of the Army

AR 420-16	Facilities Engineering; Reports
AR 420-43	Electrical Services
AR 420-90	Fire Protection
TM 5-609	Military Custodial Services Manual
TM 5-682	Facilities Engineering; Electrical Facilities Safety
TM 5-684	Facilities Engineering Electrical Exterior Facilities
TM 5-695	Maintenance of Fire Protection Systems
TM 5-760	Interior Wiring
TM 5-811-1	Electric Power Supply and Distribution
TM 5-811-2	Electrical Design; Interior Electrical System
TM 5-811-3	Electrical Design; Lightning and Static Electricity Protection

Department of the Navy

11014.22c	Technical Coordination and Support of the Maintenance of Public Works and Public Utilities
11014.29B	Public Works Types Maintenance Problems Arising from Field Operation Experience
MO-117	Fire Alarm and Sprinkler Maintenance
MO-200	Electrical Exterior Facilities
MO-201	Operation of Electric Power Distribution System
MO-202	Control of Electromagnetic Interference on Overhead Power Lines
MO-203	Wire Communication and Signal System Maintenance
MO-204	Electrical Power System Analysis
MO-205	Central Heating and Steam-Electric Generating Plants
MO-207	Operation and Maintenance of Internal Combustion Engines

Department of the Air Force

AFIND 17	Air Force Occupational Safety and Health (AFOSH) Standards, Department of Labor Occupational Safety and Health (OSHA) Standards, and National Institute for Occupational Safety and Health (NIOSH) Publication
API 32-1062	Management of Electric Power Plants and Generators
AFJMAN 32-1080	Electric Power Supply and Distribution
AFJMAN 32-1081	Electrical Design, Interior Electrical Systems
A.FM 88-9	Chap. 3, Electrical Design, Lightning and Static Electricity Protection
AFJ MAN 32-1082	Facilities Engineering, Electrical Exterior Facilities
AFI 32-1063	Electric Power Systems
AFI 32-1065	Grounding Systems
AFI 41-203	Electrical Safety in Medical Facilities
AFI 32-1044	Visual Air Navigation Systems

A-2. Nongovenment Publications

American National Standards Institute (ANSI), National Electric Safety Code, Standard C2, 1993, 1430 Broadway, New York, NY 19918

Illuminating Engineer Society (IES), IES Handbook, 1987, 345 East 47th Street, New York, NY 10017

Institute of Electrical and Electronics Engineers (IEEE), Guide for Field Testing of Relaying Current Transformers IEEE Standard C57.13-1-1981, 345 East 47th Street, New York, NY 10017

Institute of Electrical and Electronics Engineers (IEE), IEEE Recommended Practice for Grounding of Industrial and Commercial Power Systems, IEEE Standard 142-1982, 345 East 47th Street, New York, NY 10017

Institute of Electrical and Electronics Engineers (IEEE), ZEEE Recommended Practice for Power Systems Analysis, IEEE Standard 399-1980, 345 East 47th Street, New York, NY 10017

Institute of Electrical and Electronics Engineers (IEEE), IEEE Recommended Practice for Protection and

Coordination of Industrial and Commercial Power Systems, IEEE Standard 242-1986,345 East 47th Street, New York, NY 10017

Institute of Electrical and Electronics Engineers (IEEE), IEEE Recommended Practice on Surge Voltages in Low Voltage AC Power Circuits, IEEE Standard C62.41-1991, 345 East 47th Street, New York, NY 10017

National Electrical Manufacturers Association (NEMA), Enclosures for Electrical Equipment, NEMA Standard 250-1991, 2101 L Street, NW, Washington, DC 20037

National Electrical Manufacturers Association (NEMA), Guidelines for Inspectionn and Preventative Maintenance of Molded Case Circuit Breakers Used in Commercial and Industrial Applications, NEMA Standard AB 4-1991, 2101 L Street, NW, Washington, DC 20037

National Fire Protection Association (NFPA), National Electrical Code, NFPA publication #70, 1990, 1 Batterymarch Park, Quincy, MA 02269

National Fire Protection Association (NFPA), Recommended Practice for Electrical Equipment Maintenance, NFPA publication #70B, 1990, 1 Batterymarch Park, Quincy, MA 02269

National Fire Protection Association (NFPA), Installation, Maintenance, and Use of Protective Signaling Systems, NFPA publication #72, 1990, 1 Batteryrmarch Park, Quincy, MA 02269

National Fire Protection Association (NFPA), Fire Tests of Building Construction and Materials, NFPA publication #251, 1990, 1 Batterymarch Park Quincy, MA 02269

Underwriters Laboratories (UL), UL Standard for Safety: Molded Case Circuit Breakers and Circuit Breaker Enclosures, UL #489-1991, 207 East Ohio Street, Chicago, IL 60611

The proponent agency of this publication is the United States Army Center for Public Works. Users are invited to send comments and suggested improvements on DA Form 2028 (Recommended Changes to Publications and Blank Forms) directly to Director, U.S. Army Center for Public Works, Attn: CECPW-EE, 7701 Telegraph Rd., Alexandria, VA 22315-3862.

By Order of the Secretaries of the Army, the Navy, and the Air Force:

DENNIS J. REIMER
General, United States Army
Chief of Staff

Official:

Yvonne M. Harrison

YVONNE M. HARRISON
Administrative Assistant to the Secretary of the Army

D. J. NASH
Rear Admiral CEC, USN Commander, Naval Facilities Engineering Command

OFFICIAL

EUGENE A LUPIA, *Maj General, USAF*
The Civil Engineer

Distribution:
Army: To be distributed in accordance with DA Form 12-34-E, block 0695 requirements for TM 5-683.
Air Force: F

*U.S. G. P.O. : 1996-404-611 :20046