Naval Facilities Engineering Command
200 Stovall Street
Alexandria, Virginia 22332-2300

APPROVED FOR PUBLIC RELEASE

INSPECTION OF VERTICAL TRANSPORTATION EQUIPMENT

NAVFAC MO-118

October
1988

S/N-0525-LP-001-3390

Distribution: (2 copies each unless otherwise indicated)

SNDL:	ACTIVITY
A3	CNO
A6	CMC
21A	FLECOMINCH
22A	FLECOM
23A	NAVFORCOM
23C	NAVRESFODET
24G	SUFORCOM
26B	NAVSRESFORDET
26U	SFORLANTREADSUPPGRU
26W	CARGOHANDPORTGRU
26Z	SHORINTERMMAINTACT
26NN	LANTFLESCLSHTPENGTRATEAM
26VV	SUFORREP
26XX	OCEANU
39	CBREGIMDET
45H	ENGBCO
45J	HQB
51D1	EASTLANTCOM
5ID2	WESTLANTCOM
B3	COLL & UNIV
B5	USCG
BB	COMUSMARDEZ
C20A	ONRDET
C20B	ONR
C20C	NRLDET
C20G	NAVOCEANSYSCENDET
C28E	COMNAVBASDET
C31B	NAVSTADET
C31F	NAVFACDET
C31G	NAVSHIPREPFACDET

SNDL:	ACTIVITY
FA7	NAVSTA LANT
FA10	SUBASE LANT
FA13	NAVSUB-SUPPFACLANT
FA23	NAVFAC LANT
FA32	CBU LANT
FA46	PWC LANT (10 ea)
FB10	NAVSTA PAC
FB13	SUBASE PAC
FB28	COMNAVBASEPAC
FB36	NAVFACPAC
FB41	CBU PAC
FB45	TRIREFFACPAC
FB48	NAVSUPPFACPAC
FB54	PWC PAC (10 ea)
FC1	FOCCEUR
FC3	COMNAVACT EUR
FC12	NAVSUPPACT EUR
FC7	NAVST EUR
FC12	NAVS13PPO EUR
FD1	COMNAV-OCEANCOM
FD4	OCEANCEN
FF1	COMNAVDIST WASHINGTON DC
FF3	NAVSTA CNO
FF18	NAVTACSUPPACT
FF32	FLDSUPPACT
FF38	USNA
FF42	NAVPGSCOL
FKA1A	AIRSYSCOM
FKA1B	SPAWARSYSCOM

SNDL:	ACTIVITY
C34B	NAVSTA ROTA DET
C34C	NAVSUPPACT NAPLES DET
C40	NAVOCEANCOMDET (Only Charleston, Gulfport. Newport, FPO Seattle FPO Miami)
C8IC	NAVELECSYSCOMDET
C84D	NAVUSEAWARENGSTADET
E3A	LAB ONR
E3C	NORDA
FKP1J	NAVORDSTAs
FKP3A	NAVPRO
FKP5A	NAFSEACEN
FKP7	NAVSHIPYDs (10 ea)
FKQ6B	NAVCOASTSYSCEN
FKQ6C	NAVOCEANSYSCEN
FKQ6E	DAVTAYR&DCENDET
FR15	NAVSUPPACT COMNAVRESFOR
FR18	NAVRESMAINTRAFAC
FT1	CNET
FT15	NAVU
FT18	CBU
FT20	NAVCONSTRACEN
FT24	FLETRACEN
FT28	NETC

SNDL:	ACTIVITY
FKAIF	SUPSYSCOM
FKA1G	COMNAV-SEASYSCOM
FKA8F2	NAVPRO
FKABF5	SUBASE
FKN1	EFDs (50 ea)
FKN2	CBCs
FKN3	OICCS
FKN10	NAVSUPPFAC
FKN11	NAVCIVENGRLAB
FKP1B	WPNSTAs
FT31	NTC
FT37	NAVSCOLCECOFF
FT38	NAVSUB-TRACENPAC
FT39	NAVTECHTRACEN
FT55	NAVSCSCOL
FT60	EDTRASUPPCEN
FT78	TRITRAFAC
FT85	TRITRAFAC
FT104	PWC CNET (10 ea)
V2	MARBKS
V12	CG MCDEC
V14	HQBN HQMC
V16	CG MCB
V17	MARCORCAMP
V23	CG MCLB

HQ U.S. Air Force,
Engineering and Services Center
Tyndall AFB, FL 32403 (10 Copies)

U.S. Army
Engineering & Housing Support Center Fort Belvoir, VA 22060-5516
(25 copies)

U.S. Army
Office Chief of Engineers
Washington DC 20314
(DAEN-MPO) (10 Copies)

STOCKED:

CO. Navy Publications and Forms Center
5801 Tabor Avenue
Philadelphia, PA 19120

ABSTRACT

This manual is a guide for use by Navy personnel involved in performing periodic and routine inspections of Vertical Transportation Equipment (VTE). The introductory chapter provides a summary of VTE inspector duties, VTE certification requirements and VTE inspector qualifications. The remainder of this manual provides general procedures for inspection of various types of VTE including elevators, dumbwaiters, lifts, escalators, levellators and conveyors.

PAGE vi INTENTIONALLY LEFT BLANK

FOREWORD

This manual provides guidance for the routine and periodic inspection and certification of Vertical Transportation Equipment (VTE). This manual also covers the safety areas of the devices and incorporates steps to ensure that the inspection includes areas of the equipment that will help determine if proper maintenance is being performed. This manual is not intended to provide a step by step procedure document, but is to be used as a guide by an experienced person to ensure that a complete examination and evaluation of the equipment is accomplished.

The methods and guidelines presented are intended to accomplish the inspection and certification of VTE in the most efficient and cost effective manner. The procedures outlined have been developed from the best technical sources available in industry and the military services.

Recommendations or suggestions for modification, or additional information and instructions that will improve the publication and motivate its use, are invited and should be forwarded to the Commander, Naval Facilities Engineering Command (Attention: Code 163), 200 Stovall Street, Alexandria, VA. 22332-2300. Telephone: Commercial (202) 325-8181, Autovon 221-8181.

This publication has been reviewed and is approved for certification as an official publication of this Command in accordance with SECNAV Instruction 5600.16.

G. F. EVERHART
Assistant Commander for
Public Works Centers and Departments

PAGE viii INTENTIONALLY LEFT BLANK

CONTENTS

Page

CHAPTER 1 INTRODUCTION TO INSPECTION OF VERTICAL TRANSPORTATION EQUIPMENT. 1-1

1.1 General 1-1
1.1.1 Objective 1-1
1.1.2 VTE Inspector Duties 1-1
1.1.3 Responsibility 1-2
1.1.4 Definitions 1-2

1.2 Application 1-3
1.2.1 Inspection 1-3
1.2.2 Certifications. 1-5
1.2.3 Reporting 1-5
1.2.4 Audits. 1-6
1.2.5 Inventory 1-6

1.3 Personnel 1-6
1.3.1 Qualifications Of Inspectors 1-6
1.3.2 Personal Safety 1-7
1.3.3 Recommended Equipment 1-8

1.4 Performance 1-9
1.4.1 Before Making An Inspection 1-9
1.4.2 Inspection Criteria 1-10
1.4.3 Maintenance Criteria. 1-10
1.4.4 Maintenance Records 1-11

CHAPTER 2 ELECTRIC ELEVATORS 2-1

2.1 Introduction 2-1
2.1.1 Scope 2-1
2.1.2 Performance Criteria. 2-1

2.2 Inside The Car Inspection 2-8
2.2.1 Scope 2-8
2.2.2 Operating And Signalling Devices 2-8
2.2.3 Car Enclosure. 2-8

2.2.4 Car Doors. 2-9
2.2.5 Car Sill 2-9
2.2.6 Freight Elevator Enclosures 2-9
2.2.7 Firefighter's Service Instructions 2-9
2.2.8 Performance. 2-10

2.3 Outside Car Inspection. 2-10
2.3.1 Hoistway Entrances 2-10
2.3.2 Closing Force 2-10
2.3.3 Access Switch Operation. 2-10
2.3.4 Emergency Key Access 2-10
2.3.5 Operating And Signalling Devices 2-11
2.3.6 Firefighter's Service Instruction. 2-11
2.3.7 Counterweights In Separate Hoistway. 2-11

2.4 Car Top Inspection. 2-11
2.4.1 Scope 2-11
2.4.2 Wire Rope Inspection. 2-12
2.4.3 Car Top 2-12
2.4.4 Door Operator 2-12
2.4.5 Hoistway Entrances 2-12
2.4.6 Covers And Guards 2-18
2.4.7 Hoistway Ventilation 2-18
2.4.8 Wiring. 2-18
2.4.9 Guides. 2-18
2.4.10 Hoistway Housekeeping 2-18
2.4.11 Load Weighing Devices 2-18

2.5 Overhead Machinery Space and Machine Room Inspection 2-19
2.5.1 Scope. 2-19
2.5.2 Main Line Switch 2-19
2.5.3 Speed Governor 2-20
2.5.4 Traction Sheave. 2-20
2.5.5 Guards 2-22
2.5.6 Gears And Bearings 2-22
2.5.7 Hoist Motor. 2-22
2.5.8 Brake. 2-22
2.5.9 Motor-Generator Set. 2-26
2.5.10 Operating Speed. 2-26
2.5.11 Control Equipment. 2-26
2.5.12 Machine Room 2-26
2.5.13 Machine Room Access. 2-27

2.6 Pit Inspection. 2-27
2.6.1 Scope. 2-27
2.6.2 Housekeeping 2-27
2.6.3 Counterweight Runby. 2-27

2.7 Periodic Inspection And Tests 2-28
2.7.1 Scope. 2-28
2.7.2 Annual Speed Governor Inspection 2-28
2.7.3 Annual Safety Inspection and Test Of Safeties 2-28
2.7.4 Five-Year Inspection And Test Of Speed Governors and Safeties 2-28
2.7.5 Annual Test Of Buffers 2-28
2.7.6 Five-Year Test Of Buffers. 2-28
2.7.7 Annual Test Of Normal And Final Stopping Devices 2-28
2.7.8 Standby Power. 2-29
2.7.9 Door Closing Force 2-29
2.7.10 Firefighter's Service. 2-29

2.8 Inspection Of Winding Drum Elevators. 2-30
2.8.1 Scope. 2-30
2.8.2 Wire Rope Inspection 2-30
2.8.3 Normal And Final Stopping Devices 2-30
2.8.4 Winding Drum Machine 2-31
2.8.5 Slack Rope Device. 2-31

2.9 Inspection Of Screw-Column Elevators. 2-31
2.9.1 Scope. 2-31
2.9.2 In-Car Inspection. 2-37
2.9.3 Outside Of Hoistway Inspection 2-38
2.9.4 Top Of Car Inspection. 2-38
2.9.5 Inspection Of Machine Rooms And Machinery Space. 2-39
2.9.6 Periodic Inspection And Tests. 2-39

CHAPTER 3 HYDRAULIC ELEVATORS. 3-1

3.1 Introduction. 3-1
3.1.1 Scope. 3-1
3.1.2 Performance Criteria 3-1

3.2 Inside The Car Inspection 3-4
3.2.1 Scope. 3-4
3.2.2 Operating And Signalling Devices 3-4
3.2.3 Car Enclosure 3-4

3.2.4 Car Doors. 3-4
3.2.5 Car Sill 3-4
3.2.6 Freight Elevator Enclosures. 3-4
3.2.7 Firefighter's Service Instructions 3-6
3.2.8 Performance. 3-6

3.3 Outside The Car Inspection. 3-6
3.3.1 Hoistway Entrance. 3-6
3.3.2 Closing Force. 3-6
3.3.3 Access Switch Operation. 3-6
3.3.4 Emergency Key Access 3-6
3.3.5 Operation And Signalling Devices 3-6
3.3.6 Firefighter's Service Instructions 3-6

3.4 Car Top Inspection. 3-6
3.4.1 Scope. 3-6
3.4.2 Anti-Creep 3-7
3.4.3 Car Top. 3-7
3.4.4 Door Operator. 3-7
3.4.5 Hoistway Entrances 3-7
3.4.6 Covers And Guards 3-7
3.4.7 Hoistway Ventilation 3-7
3.4.8 Wiring 3-7
3.4.9 Guides 3-7
3.4.10 Hoistway Housekeeping 3-7
3.4.11 Operating Speed. 3-8

3.5 Overhead Machinery Space Or Machine Room. 3-8
3.5.1 Scope. 3-8
3.5.2 Main Line Switch 3-8
3.5.3 Relief Valve 3-8
3.5.4 Oil Leakage. 3-8
3.5.5 Guards 3-11
3.5.6 Bearings 3-11
3.5.7 Control Equipment. 3-11
3.5.8 Machine Room 3-11
3.5.9 Machine Room Access. 3-11

3.6 Pit Inspection. 3-11
3.6.1 Scope. 3-11
3.6.2 Housekeeping 3-11

3.7 Periodic Inspection And Tests 3-12
3.7.1 Scope. 3-12
3.7.2 Standby Power. 3-12
3.7.3 Door Closing Force 3-12
3.7.4 Firefighter's Service. 3-12

CHAPTER 4 DUMBWAITERS. 4-1

4.1 Introduction. 4-1
4.1.1 Scope. 4-1
4.1.2 Special Criteria 4-1

4.2 Outside Hoistway Inspection. 4-4
4.2.1 Hoistway Doors 4-4
4.2.2 Car Doors. 4-10
4.2.3 Car Enclosure. 4-12
4.2.4 Operating And Control Devices. 4-12
4.2.5 Counterweight. 4-12
4.2.6 Suspension And Fastenings. 4-13
4.2.7 Normal Terminal Stopping Devices 4-13
4.2.8 Car And Counterweight Guide Rails, Rail Fastenings, Car Crossheads, And Car Guiding Members. 4-14
4.2.9 Car Top. 4-14
4.2.10 Covers And Guards. 4-14
4.2.11 Car Leveling Devices 4-14
4.2.12 Hoistway Junction Box, Car Junction Box, And Travelling Cables 4-15
4.2.13 Installation Of Pipes, Wiring And Ducts In Hoistway. 4-17
4.2.14 Hoistway Ventilation 4-17
4.2.15 Hoistway Housekeeping. 4-17
4.2.16 Pit Housekeeping 4-17
4.2.17 Pit Stop Switch. 4-17
4.2.18 Car Frame (Sling) And Platform 4-17
4.2.19 Car And Counterweight Bottom Guide Shoes. 4-18
4.2.20 Car And Counterweight Safety Parts 4-18

4.3 Overhead Machinery Space And Machine Room Inspection. 4-18
4.3.1 Wire Rope Inspection 4-18
4.3.2 Overhead, Secondary And Deflecting Sheaves. 4-21
4.3.3 Overhead Beams And Fastenings. 4-22
4.3.4 Overhead Grating Or Platforms. 4-22
4.3.5 Traction Driving Sheave. 4-22
4.3.6 Guards For Exposed Equipment 4-23

4.3.7 Winding Drum Machine 4-23
4.3.8 Driving Machine Terminal-Stopping Switches 4-23
4.3.9 Slack-Rope Device. 4-25
4.3.10 Normal Terminal Stopping Switches. 4-25
4.3.11 Gears And Bearings 4-25
4.3.12 Driving-Machine Motor. 4-26
4.3.13 Driving Machine Brake. 4-26
4.3.14 Motor-Generator Sets Used With Generator-Field Control. 4-27
4.3.15 Control Equipment. 4-27
4.3.16 Machine Room 4-28
4.3.17 Machine Room Access. 4-29

CHAPTER 5 LIFTS WITH AUTOMATIC TRANSFER DEVICES 5-1

5.1 Introduction. 5-1
5.1.1 Scope. 5-1
5.1.2 Application. 5-1
5.1.3 Performance Criteria 5-3

5.2 Inside The Car Inspection 5-8
5.2.1 Scope. 5-8
5.2.2 Operating And Signalling Devices 5-8
5.2.3 Car Enclosure 5-9
5.2.4 Car Doors. 5-9

5.3 Outside The Car Inspection. 5-9
5.3.1 Hoistway Entrances 5-9
5.3.2 Non-Restricted Area. 5-9
5.3.3 Feeding Conveyors. 5-10

5.4 Car Top Inspection. 5-10
5.4.1 Car Top. 5-10
5.4.2 Sill Clearance 5-10

5.5 Pit Inspection 5-10
5.5.1 Buffers. 5-10
5.5.2 Safety Device. 5-10

CHAPTER 6 SPECIAL APPLICATION ELEVATORS 6-1

6.1 Introduction. 6-1
6.1.1 Scope. 6-1

6.1.2 Procedure. 6-1

6.2 Sidewalk Elevators. 6-1
6.2.1 Introduction 6-1
6.2.2 Inside The Car Inspection. 6-3
6.2.3 Outside The Hoistway Inspection. 6-4
6.2.4 Machine Spaces And Machine Room Inspection 6-5
6.2.5 Pit Inspection 6-7
6.2.6 Periodic Inspection And Tests. 6-7

6.3 Residence Elevators 6-8
6.3.1 Introduction 6-8
6.3.2 Inside The Car Inspection. 6-8
6.3.3 Outside The Hoistway Inspection. 6-10
6.3.4 Machine Room And Machine Space Inspection 6-11
6.3.5 Inside The Hoistway Inspection 6-11
6.3.6 Periodic Inspection And Tests. 6-12

6.4 Special Purpose Elevators 6-12
6.4.1 Introduction 6-12
6.4.2 Inside The Car Inspection. 6-13
6.4.3 Top Of Car Inspection. 6-14
6.4.4 Outside The Hoistway Inspection. 6-15
6.4.5 Machine Room And Machine Spaces Inspection 6-15
6.4.6 Inside The Hoistway Inspection 6-16
6.4.7 Periodic Inspection And Tests. 6-16

6.5 Handicapped Lifts 6-17
6.5.1 Scope. 6-17
6.5.2 Platform Inspection. 6-17
6.5.3 Landing Inspection 6-22
6.5.4 Machine Space Inspection 6-22

6.6 Inclined Elevators. 6-23
6.6.1 Introduction 6-23
6.6.2 Hoistway 6-23
6.6.3 Inside The Car Inspection. 6-24
6.6.4 Outside The Car Inspection 6-24
6.6.5 Machine Spaces And Machine Room Inspection 6-25
6.6.6 Periodic Inspection And Tests. 6-27

CHAPTER 7 ESCALATORS. 7-1

7.1 Introduction 7-1
7.1.1 Scope. 7-1
7.1.2 Performance Criteria 7-1

7.2 Routine Inspection 7-5
7.2.2 Scope. 7-5
7.2.2 Balustrades And Guards 7-5
7.2.3 Handrails. 7-5
7.2.4 Step Treads And Risers 7-5
7.2.5 Combplates 7-5
7.2.6 Illumination 7-7
7.2.7 Caution Signs. 7-7
7.2.8 Operation. 7-7
7.2.9 Skirt Obstruction Device 7-7
7.2.10 Skirt to Step Clearance. 7-7
7.2.11 Start Switch 7-10

7.3 Periodic Inspection And Tests. 7-10
7.3.1 Scope. 7-10
7.3.2 Machinery Space. 7-10
7.3.3 Controls 7-10
7.3.4 Wiring 7-10
7.3.5 Drive Machine. 7-14
7.3.6 Speed Governor 7-14
7.3.7 Step Chain 7-14
7.3.8 Tandom Operation 7-14
7.3.9 Step Upthrust Device 7-19
7.3.10 Rolling Shutters 7-23

CHAPTER 8 MOVING WALKS. 8-1

8.1 Introduction. 8-1
8.1.1 Scope. 8-1
8.1.2 Performance Criteria 8-1

8.2 Routine Inspection. 8-5
8.2.1 Scope 8-5
8.2.2 Balustrades And Guards 8-5
8.2.3 Handrails. 8-5
8.2.4 Treadway 8-5

8.2.5 Treadway Supports. 8-7
8.2.6 Threshold Plates 8-7
8.2.7 Illumination 8-7
8.2.8 Operation. 8-7
8.2.9 Skirt To Treadway Clearance. 8-9
8.2.10 Start Switch 8-9

8.3 Periodic Inspection And Tests 8-9
8.3.1 Scope. 8-9
8.3.2 Machinery Space. 8-9
8.3.3 Controls 8-9
8.3.4 Wiring 8-10
8.3.5 Drive Machine. 8-10
8.3.6 Speed Governor 8-10
8.3.7 Pallet Chain 8-10
8.3.8 Broken Treadway Device 8-10
8.3.9 Speed Test 8-11
8.3.10 Rolling Shutters 8-11

CHAPTER 9 CONSTRUCTION HOISTS FOR MATERIAL AND PERSONNEL. 9-1

9.1 Introduction. 9-1
9.1.1 Scope. 9-1
9.1.2 Purpose. 9-1
9.1.3 Use. 9-3
9.1.4 Applicable Safety Standards. 9-3
9.1.5 Inspection Interval. 9-3

9.2 Outside Hoistway Inspection 9-3
9.2.1 Hoistway Enclosure 9-3
9.2.2 Landings 9-3
9.2.3 Hoistway Doors 9-4

9.3 Inside The Car Inspection 9-4
9.3.1 Car Doors. 9-4
9.3.2 Car Enclosure. 9-4
9.3.3 Operating And Control Devices. 9-4

9.4 Car Top Inspection. 9-5
9.4.1 Counterweight. 9-5
9.4.2 Suspension And Fastenings 9-5
9.4.3 Normal Terminal Stopping Devices 9-5

9.4.4 Car And Counterweight Guide Rails, Rail Fastenings, Car Crossheads, And Car Guiding Members. 9-6
9.4.5 Car Top. 9-6
9.4.6 Covers And Guards. 9-7
9.4.7 Car-Leveling Devices 9-7
9.4.8 Hoistway Junction Box, Car Junction Box, And Traveling Cables. 9-7
9.4.9 Installation Of Pipes, Wiring, And Ducts In Hoistway. 9-8
9.4.10 Hoistway Housekeeping. 9-8

9.5 Pit Inspection. 9-8
9.5.1 Pit Housekeeping 9-8
9.5.2 Pit Stop Switch. 9-8
9.5.3 Car Frame (Sling) And Platform 9-8
9.5.4 Car And Counterweight Bottom Guide Shoes. 9-9
9.5.5 Car And Counterweight Safety Parts. 9-9
9.5.6 Buffers. 9-9

9.6 Overhead Machinery Space And Machine Room Inspection 9-9
9.6.1 Wire Rope Inspection 9-9
9.6.2 Overhead, Secondary And Deflecting Sheaves. 9-10
9.6.3 Overhead Beams And Fastenings. 9-11
9.6.4 Overhead Platforms 9-11
9.6.5 Traction Driving Sheave. 9-11
9.6.6 Guards For Exposed Equipment 9-12
9.6.7 Winding Drum Machine 9-12
9.6.8 Rack And Pinion Drive. 9-12
9.6.9 Driving-Machine Terminal-Stopping Switches 9-12
9.6.10 Slack-Rope Device. 9-13
9.6.11 Normal And Final Terminal-Stopping Switches 9-13
9.6.12 Gears And Bearings 9-13
9.6.13 Driving-Machine Motor. 9-14
9.6.14 Driving-Machine Brake. 9-15
9.6.15 Motor-Generator Sets Used With Generator-Field Control. 9-15
9.6.16 Control Equipment. 9-16
9.6.17 Speed Governor 9-17
9.6.18 Machine Room 9-17
9.6.19 Machine Room Access. 9-18

CHAPTER 10 MANLIFTS 10-1

10.1 Introduction 10-1
10.1.1 Scope. 10-1

10.1.2 Purpose. 10-1
10.1.3 Use. 10-1
10.1.4 Applicable Safety Standards. 10-4
10.1.5 Inspection Interval. 10-4

10.2 Inspection Procedures. 10-5
10.2.1 Controlled Access. 10-5
10.2.2 Floor Openings 10-5
10.2.3 Illumination 10-5
10.2.4 Landings 10-5
10.2.5 Landing Guards 10-6
10.2.6 Floor Opening Guards 10-6
10.2.7 Protection Of Entrances And Exits. 10-6
10.2.8 Bottom Arrangement 10-8
10.2.9 Top Clearances 10-8
10.2.10 Emergency Exit Ladders 10-8
10.2.11 Drive Machine. 10-8
10.2.12 Belt 10-8
10.2.13 Belt Fastenings. 10-9
10.2.14 Pulleys. 10-9
10.2.15 Pulley Protection. 10-9
10.2.16 Speed. 10-12
10.2.17 Steps. 10-12
10.2.18 Handholds. 10-12
10.2.19 Stopping Devices 10-13
10.2.20 Signs. 10-14
10.2.21 Controls 10-14
10.2.22 Machinery Area 10-15
10.2.23 Machinery Area Access. 10-15

CHAPTER 11 AUTOMOBILE LIFTS. 11-1

11.1 Introduction. 11-1
11.1.1 Scope. 11-1
11.1.2 Purpose. 11-1
11.1.3 Use. 11-1

11.2 Lift Platform Inspection 11-1
11.2.1 General - Safety Precautions 11-1
11.2.2 Lift Platform. 11-1
11.2.3 Rack And Pinion Equalizers 11-4
11.2.4 Non-Rotating Device. 11-4

11.2.5 Cylinders. 11-4
11.2.6 Plungers 11-4
11.2.7 Plunger Fastenings 11-4
11.2.8 Oil And Air Lines. 11-5
11.2.9 Drifting Of Lift Platform. 11-5
11.2.10 Covers And Guards. 11-5
11.2.11 Housekeeping 11-5
11.2.12 Operating Speed. 11-5

11.3 Pump Equipment. 11-6
11.3.1 Main Line Switch 11-6
11.3.2 Pumps. 11-6
11.3.3 Drives (If Applicable) 11-6
11.3.4 Relief And Check Valves. 11-6
11.3.5 Flexible Hydraulic Hose And Fitting Assemblies 11-6
11.3.6 Storage And Discharge Tanks. 11-7
11.3.7 Operating Valves And Fixtures. 11-7
11.3.8 Equipment Location 11-7

11.4 Periodic Inspection And Tests. 11-7
11.4.1 Scope. 11-7
11.4.2 Flexible Hydraulic Hose And Fitting Assemblies And Flexible Couplings. 11-7
11.4.3 Pressure Tanks 11-8

CHAPTER 12 MECHANIZED PARKING GARAGE EQUIPMENT 12-1

12.1 Introduction. 12-1
12.1.1 Scope. 12-1
12.1.2 Purpose. 12-1

12.2 Inspection Procedures 12-1

12.2.1 Landings 12-1
12.2.2 Illumination 12-3
12.2.3 Power Unit 12-3
12.2.4 Controls 12-4
12.2.5 Machinery Area 12-5
12.2.6 Machinery Area Access. 12-5
12.2.7 Lift Platform. 12-5
12.2.8 Covers And Guards. 12-6
12.2.9 Housekeeping 12-6

12.2.10 Cylinders. 12-6
12.2.11 Plungers 12-6
12.2.12 Plunger Fastenings 12-6
12.2.13 Oil Lines. 12-7
12.2.14 Drifting Of Lift Platform. 12-7

12.3 Periodic Inspection And Tests 12-7
12.3.1 Scope 12-7
12.3.2 Flexible Hydraulic Hose And Fitting Assemblies And Flexible Couplings. 12-7
12.3.3 Pressure Tanks. 12-8
12.3.4 Relief And Check Valve Settings 12-8

CHAPTER 13 POWER PLATFORMS 13-1

13.1 Introduction. 13-1
13.1.1 Scope. 13-1
13.1.2 Purpose. 13-1
13.1.3 Use. 13-7
13.1.4 Applicable Safety Standards. 13-7
13.1.5 Inspection Interval. 13-7
13.1.6 Special Safety Precautions 13-8

13.2 Inspection Procedures 13-9
13.2.1 Application. 13-9
13.2.2 Maintenance And Repair 13-9
13.2.3 Inspections Performed On The Roof Or On The Ground For Ground Rigged Powered Scaffolds 13-9
13.2.4 Inspections Performed On The Powered Scaffold 13-9
13.2.5 Controls (For Roof Car Type Devices). 13-9

CHAPTER 14 LEVELLATORS 14-1

14.1 Introduction. 14-1
14.1.1 Scope. 14-1
14.1.2 Purpose. 14-1
14.1.3 Use. 14-1
14.1.4 Safety Standards 14-2

14.2 Inspection Procedures 14-2
14.2.1 Landings 14-2

14.2.2 Landing Guards And Skirts. 14-5
14.2.3 Illumination 14-5
14.2.4 Power Unit 14-5
14.2.5 Controls 14-6
14.2.6 Machinery Area 14-7
14.2.7 Machinery Area Access. 14-8
14.2.8 Lift Platform. 14-8
14.2.9 Covers And Guards. 14-8
14.2.10 Housekeeping 14-9
14.2.11 Cylinders. 14-9
14.2.12 Plungers 14-9
14.2.13 Plunger Fastenings 14-9
14.2.14 Oil Lines. 14-9
14.2.15 Drifting Of Lift Platform. 14-9

14.3 Periodic Inspection And Tests 14-10
14.3.1 Scope. 14-10
14.3.2 Flexible Hydraulic Hose And Fitting Assemblies And Flexible Couplings. 14-10
14.3.3 Pressure Tanks 14-10
14.3.4 Relief And Check Valve Settings. 14-10

CHAPTER 15 INDUSTRIAL CONVEYORS. 15-1

15.1 Introduction. 15-1
15.1.1 Scope. 15-1
15.1.2 Purpose. 15-1
15.1.3 Use. 15-1
15.1.4 Applicable Safety Standards. 15-2
15.1.5 Inspection Interval. 15-2

15.2 Inspection Procedures 15-3
15.2.1 Verification Of Application. 15-3
15.2.2 Condition Of Maintenance 15-3
15.2.3 Controlled Access. 15-3
15.2.4 Floor Openings 15-3
15.2.5 Illumination 15-4
15.2.6 Entry Or Loading Area. 15-4
15.2.7 Floor Opening Guards 15-4
15.2.8 Drive Machines 15-4
15.2.9 Controls 15-5
15.2.10 Machinery Areas. 15-5

15.2.11 Machinery Area Access. 15-6

15.3 Special Conveyor Safety Considerations. 15-6
15.3.1 Belt Conveyors - Fixed In Place. 15-6
15.3.2 Bucket Conveyors 15-6
15.3.3 Chain Conveyors. 15-6
15.3.4 En Masse Conveyors 15-7
15.3.5 Flight And Apron Conveyors - Bulk Material. 15-7
15.3.6 Incline Reciprocating Conveyors. 15-7
15.3.7 Live Roller Conveyors - Belt Or Chain Driven 15-8
15.3.8 Mobile Conveyors 15-8
15.3.9 Portable Conveyors, Extending Belt Conveyors, And Car Unloaders 15-9
15.3.10 Pusher Bar Conveyors 15-9
15.3.11 Roller And Wheel Conveyors 15-9
15.3.12 Screw Conveyors. 15-9
15.3.13 Shuttle Conveyors, Belt Trippers, And Transfer Cars. 15-10
15.3.14 Skip Hoists - Bulk Materials 15-10
15.3.15 Slat Conveyors And Roller Slat Conveyors. 15-11
15.3.16 Suspended Vertical Tray Conveyors. 15-11
15.3.17 Tow Conveyors - In The Floor 15-11
15.3.18 Trolley Conveyors And Power And Free Conveyors 15-12
15.3.19 Verticle Articulated Platform Conveyor 15-13
15.3.20 Verticle Chain opposed Shelf Type Conveyors. 15-13
15.3.21 Verticle Reciprocating Conveyors. 15-13

CHAPTER 16 STACKING CRANES (FIXED) 16-1

16.1 Introduction. 16-1
16.1.1 Scope. 16-1
16.1.2 Purpose. 16-1
16.1.3 Use. 16-1
16-1.4 Applicable Safety Standards 16-6
16.1.5 Inspection Interval. 16-6

16.2 Inspection Made From Inside Cab 16-6
16.2.1 General Safety Precautions 16-6
16.2.2 Enclosure. 16-6
16.2..3 Operation 16-6

16.3 Inspection Of The Bridge 16-8
16.3.1 General. 16-8
16.3.2 Guides 16-8

16.3.3 Hoist Drive System 16-8
16.3.4 Hoist Drum 16-11
16.3.5 Wire Rope Or Cable 16-11
16.3.6 Inspection Of The Broken Rope Safety Device. 16-13

16.4 Inspection Of The Aisle Drive 16-15
16.4.1 General. 16-15
16.4.2 Motor. 16-15
16.4.3 Gear Case. 16-18
16.4.4 Wheels 16-18
16.4.5 Magnetorque Load Brake 16-18
16.4.6 Inspection Of The Motor Brake. 16-18

16.5 Inspection Of The Controller. 16-18
16.5.1 General. 16-18
16.5.2 Inspections. 16-19

16.6 Inspection Of The Carriage. 16-19
16.6.1 General. 16-19
16.6.2 Guide Rollers. 16-19
16.6.3 Carriage Spring. 16-19
16.6.4 Shifter Assembly 16-19
16.6.5 Adjustments. 16-23
16.6.6 Shifter Drive. 16-23
16.6.7 Scanning System. 16-25

16.7 Inspection Of The Upper End Tie 16-25
16.7.1 Upper Guide Rollers 16-25
16.7.2 Sheave Assemblies 16-25

CHAPTER 17 BOX CONVEYORS 17-1

17.1 Introduction. 17-1
17.1.1 Scope. 17-1
17.1.2 Use. 17-1
17.1.3 Applicable Safety Standards. 17-1
17.1.4 Inspection Interval. 17-4

17.2 Inspection Of Self Propelled Box Conveyor 17-4
17.2.1 General Description. 17-4
17.2.2 Track. 17-4
17.2.3 Switches 17-7

17.2.4 Dispatching And Receiving Stations 17-7
17.2.5 Fire Dampers 17-12
17.2.6 Delivery Vehicles. 17-12
17.2.7 System Operation 17-17

17.3 Inspection Of Selective Vertical Box Conveyor 17-17
17.3.1 General Description. 17-17
17.3.2 Inspection Made In Overhead Machinery Space. 17-17
17.3.3 Inspection Made At Each Landing. 17-22
17.3.4 Inspection Made In The Pit 17-24
17.3.5 System Operation 17-24

INDEX. Index-1

LIST OF FIGURES

Page

1-1 Naval Facilities Engineering Command Elevator Inspection Certificate 1-4
1-2a Sample Manufacturer's Lubrication Guide For Gear/Gearless Elevator 1-12
1-2b Sample Manufacturer's Suggested Adjustment Schedule For Gear/Gearless Elevator. 1-13
1-3a Sample Manufacturer's Lubrication Guide For Hydraulic Elevator 1-14
1-3b Sample Manufacturer's Suggested Adjustment Schedule For Hydraulic Elevator. 1-15
1-4a Sample Manufacturer's Lubrication Guide For Escalator/Moving Walk. 1-16
1-4b Typical Manufacturer's Suggested Adjustment Schedule For Escalators/Moving Walks 1-17
2-1 Typical Installation of an Overhead One to One (1:1) Geared Traction Machine Passenger Elevator 2-2
2-2 Typical Installation of an Overhead One to One (1:1) Freight Elevator 2-3
2-3 Typical Installation of Overhead Two to one (2:1) Gearless Traction Machine Passenger Elevator 2-4
2-4 (a) 1:1 Double-Wrap Overhead Traction Machine (b) 2:1 Double-Wrap Overhead Traction Machine. 2-13
2-5 (a) 2:1 Single-Wrap Overhead Traction Machine (b) 1:1 Single-Wrap Overhead Traction Machine. 2-14
2-6 1:1 Single-Wrap Basement Traction Machine 2-15
2-7 Typical Horizontal Sliding Hoistway Door Hanger Assembly 2-16
2-8 Typical Horizontal Sliding Hoistway Door-Assembly 2-17
2-9 Improper Rope Positioning in Drive Sheave Grooves. 2-21
2-10 Rope Positioning in Drive Sheave Grooves 2-21
2-11 Geared Traction Hoist Machine. 2-23
2-12 Gearless Traction Hoist Machine. 2-23
2-13a Typical Commutator Problems. 2-24
2-13b Typical Commutator Problems. 2-25
2-14 (a) Roping Arrangement for 2:1 Overhead Drum Machine
(b) Roping Arrangement for 1:1 Overhead Drum Machine. 2-32
2-15 (a) Roping Arrangement for 1:1 Basement Drum Machine
(b) Roping Arrangement for 2:1 Basement Drum Machine 2-32
2-16 Typical Winding Drum Machine 2-33
2-17 Rope Fastening 2-34
2-18 Screw Column Elevator Schematic Showing Various Door Openings Options. . . . 2-36
2-19 Detail Of Car Mounted Drive Assembly, Nut and Screw Column 2-41
2-20a Sample Checklist For Inspection And Test Of Electric Elevators 2-42

2-20b Sample Checklist For Inspection And Test Of Electric Elevators 2-43
2-20c Sample Checklist For Inspection And Test Of Electric Elevators 2-44
2-21 Sample Elevator Equipment Profile Form 2-45
3-1 Typical Installation Of A Direct Plunger Hydraulic Elevator 3-2
3-2 Typical Installation Of A Holeless Hydraulic Elevator. 3-3
3-3 Typical Hydraulic Pump Unit With Some Components Located in the Oil Storage Tank. 3-9
3-4 Typical Hydraulic Pump Unit With Components Located Below the Oil Storage Tank 3-10
3-5a Checklist For Inspection And Test Of Hydraulic Elevators (For Direct Plunger Without Safeties Or Counterweights). 3-13
3-5b Checklist For Inspection And Test Of Hydraulic Elevators (For Direct Plunger Without Safeties Or Counterweights). 3-14
3-5c Checklist For Inspection And Test Of Hydraulic Elevators (For Direct Plunger Without Safeties Or Counterweights). 3-15
3-6 Sample Elevator Equipment Profile Form 3-16
4-1 Typical Installation Of A Overhead One To One (1:1) Traction Machine Dumbwaiter. 4-2
4-2 Typical Installation Of A Basement Two To One (2:1) Drum Machine Dumbwaiter. 4-3
4-3 Types of Dumbwaiter Units. 4-5
4-4 Typical Dumbwaiter Assembly Installation For Vertically Bi-parting Doors. 4-6
4-5 Typical Interlock. 4-7
4-6 Typical Lock and Contact 4-7
4-7 Typical Retiring Cam 4-9
4-8 Typical Dumbwaiter Car And Sling With Power Door 4-11
4-9 Typical Flexible Wire Mesh Self Tightening Traveling Cable Grips. 4-16
4-10 (a) 2:1 Roping Arrangement For Overhead Traction Machine
(b) 1:1 Roping-Arrangement For Overhead Traction Machine 4-19
4-11 (a) Roping Arrangement For 1:1 Basement Traction Machine
(b) Roping Arrangement For 2:1 Basement Traction Machine 4-19
4-12 (a) Roping Arrangement For 2:1 Overhead Drum Machine
(b) Roping Arrangement For 1:1 Overhead Drum Machine 4-20
4-13 (a) Roping Arrangement For 1:1 Basement Drum Machine
(b) Roping Arrangement For 2:1 Basement Drum Machine 4-20
4-14 Typical Overhead Winding Drum Machine. 4-24
5-1 Typical Cart Lift. 5-2
5-2 Typical Tote Box Lift. 5-4
5-3 Typical Overhead Chain Conveyor Lift 5-4
5-4 Typical in Floor Tow Chain Conveyor Lift 5-5
5-5 Typical Pallet Lift. 5-5
5-6 Typical Robot Vehicle Lift 5-7

5-7 Typical Cart Lift Ejector. 5-11
6-1 Typical Sidewalk Elevator Layout 6-2
6-2 Typical Residential Elevator 6-9
6-3 Under-Platform Pressure Switch 6-11
6-4 Typical Inclined Wheelchair Lift 6-18
6-5 Typical Vertical Wheelchair Lift Without Hoistway Enclosure. 6-19
6-6 Typical Vertical Wheelchair Lift With Hoistway Enclosure. 6-20
6-7 Typical Inclined Stairway Chairlift. 6-21
7-1 Typical Escalator Assembly 7-2
7-2 Typical Escalator Installation With Metal Interior Panels 7-3
7-3 Typical Escalator Installation With Glass Interior Panels 7-4
7-4a Typical Guard At Flush Ceiling Intersection. 7-6
7-4b Typical Guard At Offset Ceiling Intersection 7-6
7-5 Typical Escalator Landing. 7-8
7-6 Escalator Caution Sign 7-9
7-7 Typical Skirt Obstruction Devices. 7-11
7-8 Step to Skirt Clearance. 7-12
7-9 Typical Escalator Controllers and Machinery Area 7-13
7-10a Typical Escalator Drive Machines 7-15
7-10b Typical Escalator Drive Machines 7-16
7-11 Typical Escalator Chain Driven Sprocket Assembly 7-17
7-12 Typical Escalator Drive Machine 7-18
7-13 Typical Escalator Step Chain 7-20
7-14 Typical Step Chain Detail and Special Tools 7-21
7-15 Typical Chain Tension Carriage 7-22
7-16 Typical Step Upthrust Detail. 7-24
7-17 Typical Rolling Shutter Application 7-25
7-18 Checklist For Inspection And Test Of Escalators 7-26
8-1 Belt Type Moving Walk 8-2
8-2 Belt-Pallet Type Moving Walk. 8-3
8-3 Pallet Type Moving Walk 8-4
8-4a Typical Guard At Flush Ceiling Intersection 8-6
8-4b Typical Guard At Offset Ceiling Intersection 8-6
8-5a Belt Deflection With Roller Bed Support 8-8
8-5b Belt Deflection With Edge Support 8-8
8-6a Checklist For Inspection And Test Of Moving Walks 8-12
8-6b Checklist For Inspection And Test Of Moving Walks 8-13
9-1 Typical Construction Hoist. 9-2
10-1 Typical Manlift 10-2
10-2 Typical Manlift 10-3
10-3 Typical Hood Application. 10-7
10-4 Typical Lap Joint Detail. 10-10

10-5 Typical Butt Joint Detail 10-11
10-6 Sample Belt Manlift Inspection Report 10-16
11-1 Typical Lift Configurations 11-2
11-2 Typical Lift Installation 11-3
12-1 Typical Mechanized Parking Lift 12-2
13-1 Self-Powered Platform With Intermittent Tie-In System 13-2
13-2 Self-Powered Platform With Indented Mullion Guide 13-3
13-3 Self-Powered Platform With Button Guide System 13-4
13-4 Typical Self-Powered Platform Overhead Suspension 13-5
13-5 Power Scaffold Suspension Systems 13-6
14-1 Typical Levellator Arrangement. 14-2
14-2a Typical Applications of Levellators 14-3
14-2b Typical Applications of Levellators 14-4
14-3 Typical Pump Unit Assembly. 14-7
16-1 Typical Captive Aisle Stacker Crane 16-2
16-2 Lower Truck Lubrication Chart 16-3
16-3 Typical Side Shifter Assembly, Lubrication Chart. 16-4
16-4 Typical Broken Rope Safety Device, Lubrication Chart. 16-5
16-5 Operator's Controls 16-7
16-6 Lower Guide Roller Assembly 16-9
16-7 Hoist Drive System. 16-10
16-8 Hoist Drive Gear Case Assembly. 16-12
16-9 Typical Broken Rope Safety Device 16-14
16-10 Aisle Drive System. 16-16
16-11 Aisle Drive Gear Case Assembly. 16-17
16-12 Typical Carriage Assembly 16-20
16-13 Carriage Spring Adjustment. 16-21
16-14 Typical Side Shifter Assembly 16-22
16-15 Shifter Chain Adjustments 16-24
16-16 Typical Bridge Addressing System. 16-26
16-17 Typical Hoist Addressing System 16-27
16-18 Upper Guide Roller Assembly. 16-28
16-19 Upper Sheave Assembly. 16-29
17-1 Typical Self Propelled Type Box Conveyor 17-2
17-2 Typical Selective Vertical Type Box Conveyor 17-3
17-3 Typical Point To Point Self Propelled Box Conveyor System 17-5
17-4 Typical Conveyor Track 17-6
17-5 Typical Switches 17-8
17-6 Typical Switches 17-9
17-7 Typical Switches 17-10
17-8 Typical Dispatch/Receive Stations. 17-11
17-9 Typical Vertical Down-Close Fire Damper. 17-13

17-10a Typical Box Conveyor Delivery Vehicles 17-13
17-10b Typical Box Conveyor Delivery Vehicles 17-14
17-11 Description Of Delivery Vehicle 17-15
17-12 Car Mounted On Track 17-16
17-13 Typical Selective Vertical Conveyor From Operator's Side 17-18
17-14 Mechanical Sequence Of Station 17-19
17-15 Typical Overhead Machinery Space 17-20
17-16 Typical Floor Space. 17-23
17-17 Typical Pit Space. 17-25

LIST OF TABLES

2-1 Door Open/Close Time Selection Chart 2-6
2-2 Traction Elevators Floor-to-Floor Performance Time Selection. 2-7
2-3 Rope Fastenings. 2-35
3-1 Hydraulic Elevators Floor-to-Floor Performance Time Selection. 3-5
5-1 Traction Elevators Floor-To-Floor Performance Time-Selection. 5-8

CHAPTER 1

INTRODUCTION TO INSPECTION OF VERTICAL TRANSPORTATION EQUIPMENT

1.1 GENERAL

1.1.1 Objective

The objective of this manual is to provide a guide for use by Navy personnel involved in performing periodic and routine inspections of Vertical Transportation Equipment (VTE). This manual covers the safety areas of the devices and includes steps to ensure that the inspection also includes areas of the equipment that will help determine if proper maintenance is being performed. This manual is not intended to provide a step by step procedure document, but is to be used as a guide by an experienced person to ensure that a complete examination and evaluation of the equipment is accomplished. In addition, the manual is also designed for use by public works personnel as a maintenance evaluation guide and overall reference document and should provide a better understanding of vertical transportation equipment and the need for proper maintenance.

1.1.2 VTE Inspector Duties

The duties of the person making an inspection are as follows:

a. In making an initial inspection of existing installations, the inspector shall determine whether all parts of the installation conform to the requirements of the applicable code or regulations and whether the required safety devices function as required therein. In addition, the inspector shall examine the equipment to determine present condition and make recommendations for needed repairs or modifications.

b. In making routine inspections, or periodic inspections and tests of existing installations, the inspector shall determine that the equipment is in a safe operating condition, has not been altered except in conformity to the applicable code or regulations, and performs in accordance with test requirements. The inspector shall also examine the equipment to verify that it is being maintained in accordance with manufacturer's recommendations and make recommendations for needed repairs or modifications.

c. To report the results of the inspection in accordance with the applicable regulations. It is not the functions or duty of inspectors to make any repairs or adjustments to the equipment.

1.1.3 Responsibility

Responsibility for inspection, certification, annual testing, and inspection funding of all vertical transportation equipment remains with the Commanding officer or his duly appointed representative of the activity. The Commanding officer or his representative shall be responsible for scheduling all inspections and tests of vertical transportation equipment.

1.1.4 Definitions

ANSI - American National Standards Institute.

ASME - American Society of Mechanical Engineers.

CO - Commanding Officer.

Contract Speed - The speed specified in contract documents, at which the elevator is intended to operate.

Dumbwaiters - A hoisting and lowering mechanism with a car of limited capacity and size which moves in guides in a substantially vertical direction and is used exclusively for carrying material.

Elevators - A hoisting and lowering mechanism, equipped with a car or platform which moves in guide rails and serves two or more landings.

EFD - Engineering Field Division.

EIC - Engineer in Charge.

Enforcing Authority - NAVFACENGCOM certified elevator inspector.

Escalators - A power-driven, inclined, continuous stairway used for raising or lowering passengers.

Levellators - Platform lift with less than 6 foot of travel and less than 2,500 pounds capacity, permanently installed level with lower landing, or level with landing at top of travel.

Manlift - a manlift is a device consisting of a power-driven endless belt moving in one direction only, and provided with steps or platforms and handholds attached to it for the transportation of personnel from floor to floor.

Moving Walks - A type of passenger-carrying device on which passengers stand or walk, and in which the passenger-carrying surface remains parallel to its direction of motion and is uninterrupted.

NAVFAC - Naval Facilities Engineering Command.

NEC - National Electrical Code.

OIC - Officer in Charge.

OICC - Officer in Charge of Construction.

OSHA - Occupational Safety and Health Act, General Industries Standards.

Power Platforms for Exterior Building Work - A power operated work platform which operates on the exterior of a building and is used to perform exterior building maintenance functions.

PWO - Public Works Officer.

Sidewalk Elevator - An elevator of the freight type for carrying material exclusive of automobiles and operating between a landing in a sidewalk or other area exterior to a building and floors below the sidewalk or grade level.

VTE - Vertical Transportation Equipment includes but is not limited to: Elevators, Escalators, Dumbwaiters, Moving Walks, Sidewalk Elevators, Special Purpose Personnel Elevators, Automatic Transfer Devices, material Hoists, Personnel Hoists, Manlifts, Inclined Lifts, Automotive Lifts, Mechanized Parking Garage Equipment, Power Platforms for Exterior Building Work and Levellators.

1.2 APPLICATION

1.2.1 Inspection

All inspections shall be performed in accordance with the guidelines specified in this document for the specific type of equipment being inspected. Paragraphs of this manual that are identified with a vertical line in the left margin are inspections that should be made by certified Vertical Transportation Equipment Inspectors only. Required tests shall be coordinated with the in-house maintenance staff and/or the elevator maintenance contractor. All tests shall be conducted by maintenance personnel and shall be witnessed by the certified Vertical Transportation Equipment Inspector.

NAVFACENGCOM 9-11014/33 (REV 7-88)

DEPARTMENT OF THE NAVY
NAVAL FACILITIES ENGINEERING COMMAND
VERTICAL TRANSPORTATION INSPECTION CERTIFICATE

ACTIVITY	BLDG. NO.	CAPACITY

ELEVATOR/ESCALATOR/DUMBWAITER NO.	MAKE	S/N

This VTE has been inspected and meets ANSI CODE A17.1

DATES OF INSPECTION	VTE INSPECTOR	
	NAME	ACTIVITY

CERTIFICATE EXPIRES 6 MONTHS FROM LAST DATE

Locate in FMED OFFICE or under glass in car

S/N 0105-LF-002-9300

**Stocked at the Naval Publications and Forms Center
Philadelphia, PA
FIGURE 1-1
Naval Facilities Engineering Command
Elevator Inspection Certificate

When the inspector is satisfied that the equipment is in conformance with the requirements of this document and applicable code, the inspector shall certify the unit. Certification of vertical transportation equipment shall be confirmed by letter to the Commanding Officer with the inspection certificate attached or posted. Tests imposing more than normal stress on any component shall be approved by the certified Vertical Transportation Equipment Inspector. This is normally associated with safety testing of old equipment where the test would probably result in damage to other components. In this case modified testing procedures may be available such that equipment may be checked without causing damage to other elements. When no written guides for a specific type of equipment are available, the maintenance personnel should receive guidance from the local certified Vertical Transportation Equipment Inspector or appropriate geographical EFD.

When possible, inspections and tests shall be based on the equipment manufacturer's recommendations. Where local governments have jurisdiction and their safety codes require more stringent or more frequent inspections or tests than the available guides specify, the local government safety codes shall prevail.

1.2.2 Certifications

All vertical transportation equipment shall have a valid current certificate posted in the car or maintained in the Public Works Department (PWD). If held by the Public Works Department, a notice will be posted in the car stating where the certificates can be found. When no deficiencies have been found, the inspector shall complete and sign an elevator inspection certificate, NAVFAC 9-11014/33. (See Figure 1-1). When deficiencies are found, but do not detract from operating safety, the inspection certificate may be completed prior to correction. Deficiencies shall be reported. When deficiencies which directly affect operating safety are found, the inspector will immediately notify the Public Works Officer. The Public Works Officer shall insure that the equipment is locked out of service mechanically or electrically and tagged "Do Not Operate" and the certificate shall be withheld until corrective action is taken. Deficiencies of this nature include, but are not limited to, deficiencies of the car and counterweight safeties, governor, limit switches, emergency switches or contacts, slack cable switch, door locks or other safety devices, hoists or governor ropes and fastenings, and brakes and supporting structures for machinery or equipment. The certificate shall be reinstated only after reinspection and testing indicates that corrections have been made in accordance with the inspection and testing requirements of this manual.

1.2.3 Reporting

Vertical transportation equipment inspection reports shall be made to the Commanding Officer. The reports for each individual unit shall be on the respective form (See sample forms at the end of each specific chapter). This report shall provide details to allow for preparation of work orders or contracts to correct the deficiency. Tests and inspection reports shall normally be forwarded to the Commanding Officer or his representative within ten working days after the performance of tests or inspection on the individual unit. Vertical transportation equipment operating without an inspection certificate shall be reported to the Public Works Officer or Facility Manager as soon as possible. Mishaps which result in injury or death shall be reported as directed by OPNAVINST 5102.1 series. Personal Injuries/Death (PID) or Material (Property) Damage (MPD) mishap reports shall be filed as directed. Use Report Symbol OPNAV 5102-1 for PIDs and Report Symbol OPNAV 5102-2 for MPDS.

1.2.4 Audits

Audits of vertical transportation systems and equipment shall be performed by the NAVFACENGCOM Engineering Field Divisions on one third of the shore activities within the geographic area of each EFD per year. The audit shall determine if all vertical transportation systems and equipment are being inspected as recommended by this manual, whether inventory records are being properly maintained and if VTE is receiving adequate maintenance. Copies of all audit reports shall be forwarded to the NAVFAC VTE program manager at CHESNAVFACENGCOM for review. Formal audits are conducted to insure safety, reliability and to review the elevator maintenance program.

1.2.5 Inventory

An inventory of all VTE shall be accomplished by each activity and updated every year. The inventories shall be forwarded to the geographical EFD with a copy to the NAVFAC VTE Program Manager at CHESNAVFACENGCOM. As new systems are accepted by the Government, they shall be entered on the activity's inventory and the revised inventory forwarded to the geographical EFD with a copy to CHESNAVFACENGCOM.

1.3 PERSONNEL

1.3.1 Qualifications of Inspectors

All personnel performing inspections and tests of vertical transportation systems and equipment shall be qualified as follows:

1.3.1.1 Activity and EFD Personnel shall be certified by NAVFACENGCOM to inspect the VTE after having satisfied the requirements OF a, b, or c as follows:

a. (1) At least three years of journeyman experience in the Electrical or Mechanical Trades, or

(2) Technical education with a recognized Engineering degree, or

(3) Three years of experience as an Engineering Technician, or

(4) One year of experience in the design, installation, construction, maintenance or inspection of elevators, platform lifts, dumbwaiters or escalators.

(5) At least two months on-the-job training in the inspection of elevators, platform lifts, dumbwaiters or escalators which must include at least 20 inspections with a certified activity, EFD or contractor inspector.

(6) Satisfactory completion of the NAVFACENGCOM Elevator Inspector Training Course.

b. Satisfactory completion of the Elevator Safety Education Training Course and Certification by the National Association of Elevator Safety Authorities (NAESA).

c. Certification by the Building Officials and Code Administrators International Incorporated (BOCA).

1.3.1.2 Contractor Personnel shall be authorized by NAVFACENGCOM to inspect VTE if the requirements of I, II, or III have been satisfied as follows:

a. Certification to inspect elevators by the licensing authority of a political subdivision (such as state, territory, county or city) of the United States or Canada as approved by NAVFACENGCOM.

b. Satisfactory completion of the Elevator Safety Education Training Course and Certification by the National Association of Elevator Safety Authorities (NAESA).

c. Certification by the Building Officials and Code Administrators International Incorporated (BOAC).

NOTE: No one employed by a contractor presently performing any type of work on the VTE to be inspected and certified shall perform or witness the inspection of that equipment.

1.3.1.3 Training. Training of new or backup inspectors shall be accomplished to ensure a continuous supply of Certified Vertical Transportation Equipment inspection personnel. Supervisors are encouraged to assign personnel with mechanical and electrical trade backgrounds to accompany the certified Vertical Transportation Equipment Inspector.

1.3.2 Personal Safety

1.3.2.1 Hazards. Inspectors are cautioned that there are many potential hazards involved during the inspection of vertical transportation equipment. Accidents cannot only be disabling, but fatal. Inspectors are reminded of the hazards involved. The records show a number of accidents involving inspectors. Automatic starting, high voltage, moving machinery, sharp edges, and exposure to unguarded heights are just a few of the hazards.

1.3.2.2 Proper Clothing. The inspector should be suitably clothed before starting the inspection. Wearing of loose clothing, particularly neckties, should be avoided. Keep buttons, particularly those on cuffs, fastened.

1.3.2.3 Inspection of Moving Equipment. The inspector should at all times be alert for moving objects. For example, when on top of an elevator car, be alert for moving counterweights, hoistway projections such as beams, adjacent moving cars, cams, and other equipment attached thereto or mounted in the hoistway. The overhead clearance should always be noted as a number of fatal accidents have resulted from elevators, dumbwaiters, etc., running into limited overhead space while inspectors were on top. Similarly, when working in a pit, the inspector should always note the position of the platform. Remember, keep clear of descending counterweights of the elevator being inspected and those of adjacent elevators. The power supply line disconnect switch or switches should be opened when it is desired to prevent movement of the device or when inspecting electrical parts. Before starting the inspection of any vertical transportation equipment, the inspector should first determine that the operating controls, emergency stop switch, and any other safety devices or switches are in proper working order and in proper position for inspection.

1.3.2.4 Inspection of Pits. Inspectors should never enter pits containing water. A number of fatal electric shock accidents have occurred under such conditions.

1.3.3 Recommended Equipment

The following equipment is recommended for performing the inspections and tests described in this manual:

a. Flashlight with a conductive case for inspecting wire ropes and other equipment in locations where sufficient natural or artificial light is not available.

b. 6 ft. rule of nonconductive material.

c. Set of thickness gages.

d. Small hammer, preferably a 1/2 lb ballpeen.

e. Chalk or crayon.

f. Small metal mirror to be used in examining wire ropes or other parts of equipment normally inaccessible.

g. Safety hat (nonconductive).

h. Rope caliper.

i. sheave groove gage.

j. Copy of this manual.

k. Copy of the latest edition of the ANSI/ASME A17.1 Safety Code for Elevator and Escalators.

l. Copy of the latest edition of the ANSI/ASME A17.2 Inspector's Manual for Elevators and Escalators.

m. Stop watch.

n. Tachometer, preferably one provided with a 1 ft. circumference wheel for measuring speeds, or one that reads directly in feet per minute.

o. Meter, to check grounding continuity, correct phasing and verification of voltages.

p. Spirit level.

q. Door test scale (gage) to check closing door force.

r. Suitable light meter for measuring light level in foot-candles (lux).

1.4 PERFORMANCE

1.4.1 Before Making An Inspection

1.4.1.1 Equipment Profile. Each piece of vertical transportation equipment should have a complete historical record of the equipment and pertinent data relating to the installation. Additionally, a history relating to the installation is also imperative. (See sample forms at the end of each specific chapter) This information should be available from the Public Works Department. A complete review of this data should be made prior to commencing an inspection.

1.4.1.2 Entry and Exit Meeting. It is Navy policy to inform the Public Works point of contact

and Building Manager that you are going to make an inspection and advise that person you will check back with them before you leave. Leave your itinerary and approximate time schedule with the Public Works point of contact and Building Manager. Investigate for possible problem areas before beginning your inspection. This can be done by reviewing service records and interviewing equipment users.

1.4.2 Inspection Criteria

Remember, the inspection you are making is not only a safety inspection, but is also an inspection to determine the condition of the equipment and identify areas that need improvement. Proper maintenance is needed to keep the equipment operating. When preventative maintenance is lacking, shut downs will occur. The specific referenced code or standard addresses the safety aspect of the inspection. These should be reviewed and the suggested procedures followed. When these procedures are not available, suggested procedures will be included in this manual. The maintenance and performance considerations will be addressed in the following text. These have been prepared from manufacturer's recommendations.

1.4.3 Maintenance Criteria

Maintenance is broken down into four general areas: 1) housekeeping, 2) lubrication, 3) renewal or repair of worn or defective components, 4) adjustments. These areas sometimes overlap, but are sufficiently independent to allow separate evaluation.

1.4.3.1 Housekeeping. Housekeeping requires the largest segment of the total time spent maintaining the vertical transportation equipment. While at first glance this may appear to be an excessive amount of time simply cleaning, it is in fact time well spent. The environment in which the equipment operates will be the determining factor as to the actual number of hours required to maintaining proper housekeeping. Areas with dusty environment will require more cleaning time than those operating in a clean area. By keeping the equipment and surrounding area clean, the fire hazard (especially in hoistways) is greatly reduced. Potential troubles and worn components are often detected during routine cleaning operations. Dirt is a major cause of equipment malfunctions; a speck of dust between relay contacts can result in a shut down. Finally, clean equipment facilitates routine inspection and maintenance.

1.4.3.2 Lubrication. Lubrication is extremely important even though it requires a small percent of the total time spent maintaining equipment. As with any mechanical equipment, proper lubrication minimizes wear, assures proper operation, and lengthens trouble free life of components. The lubrication program should follow the equipment manufacturer's recommended lubrication requirements for frequency and type of materials to be used.

This information should be available in all machine rooms. See Figures 1-2, 1-3, and 1-4 for a sample manufacturer's lubrication guide.

1.4.3.3 Replacement. Replacement or repair of worn or defective components must be done in a timely manner. By detecting and replacing worn components, it is often possible to prevent elevator malfunctions and unscheduled shut downs. Most components are replaced because it is more cost effective to do so. However, some parts must be repaired. These repairs must be examined to assure the quality of the repair. The ANSI/ASME A17.1, Safety Code for Elevators and Escalators specifically covers repairs and replacements of damaged, broken or worn parts on equipment covered by the document. Depending on location, some parts must be replaced and not repaired.

1.4.3.4 Adjustments. Adjustments are an important part of good equipment maintenance. Proper and timely adjustments keep the equipment working smoothly and quietly, thus assuring peak performance and maximum life. Manufacturer's recommendations should be examined to determine which components will possibly need periodic adjustments and the frequency at which these adjustments should be made. Actual frequency should depend on the operating environment and the amount of use of the equipment.

1.4.4 Maintenance Records

In addition to actual maintenance work, tasks performed should be recorded. A log for each piece of equipment is required. It should be kept in the respective equipment area and should be maintained by the individual responsible for serving the equipment. Supervisory staff should use this record and other procedures to check the status of the preventive maintenance program. These logs should indicate a schedule for tasks to be performed to ensure a maintenance program designed for long life and proper and safe operation of all equipment. The log should also contain a readable, sequential list of all problems encountered. This should include the exact symptoms and corrective actions taken. This provides a job history which is needed to plot continuous troubles. The log is also a great asset to other service mechanics who may be called in to answer trouble calls when the regular maintenance man is not available. It is imperative that all entries made by the service mechanic are legible, coherent and detailed enough so the exact problems encountered and the corrective measures taken are used to build a job service history file.

LUBRICATION GUIDE

EQUIPMENT	WEECO LUBRICANTS
Machine Gear Case–Westinghouse	No. 8
Machine Gear Case–Others	No. 8 or No. 12
Machine Bearings (Babbitt)	No. 1
All Hoist & Compensating Cable Sheave Bearings (Babbitt)	No. 1
Machine Bearings (Roller)	No. 27
All Hoist & Compensating Cable Sheave Bearings (Roller)	No. 22
M.G. Sets & Hoist Motor Bearings (Sleeve Type)	No. 2
Brake Plunger (Graphite may be added)	No. 22
Brake Transmittal Levers & Ball Sockets	No. 22
Brake Pins with Grease Fittings	No. 22
Brake Pins without Grease Fittings	No. 2
Governor Grease Fitting, Bevel Gears & Tripping Lever	No. 22
Governor Pins without Grease Fittings	No. 2
SN Selector Lead Screw	No. 22 or No. 8
SD & DM Selector Worm & Gear	No. 2 or No. 8
SD & DM Selector Rails, Chains & Carriage Guides	No. 2
Stepping Switch	Kit No. 466D049n 7
Guide Rail Lubricators	No. 1
Door Operator Engine Gear Case	No. 8
Car & Hatch Door Hanger Rails–When Required	No. 22
Door Operator Contact Cams–When Required	No. 22
Safety Mechanism–Pivots & Bearings	No. 2
Compensating Sheave Guides	No. 2
Oil Buffers	No. 6
All Other Common Bearings, Pins, & Friction Points Req. Grease	No. 22
All Other Small Bearings, Pins & Friction Points Req. Light Lub.	No. 2
For Extreme Cold Conditions Use Low Temp. Lubricant	

FIGURE 1-2a
Sample Manufacturer's Lubrication Guide
For Geared/Gearless Elevators

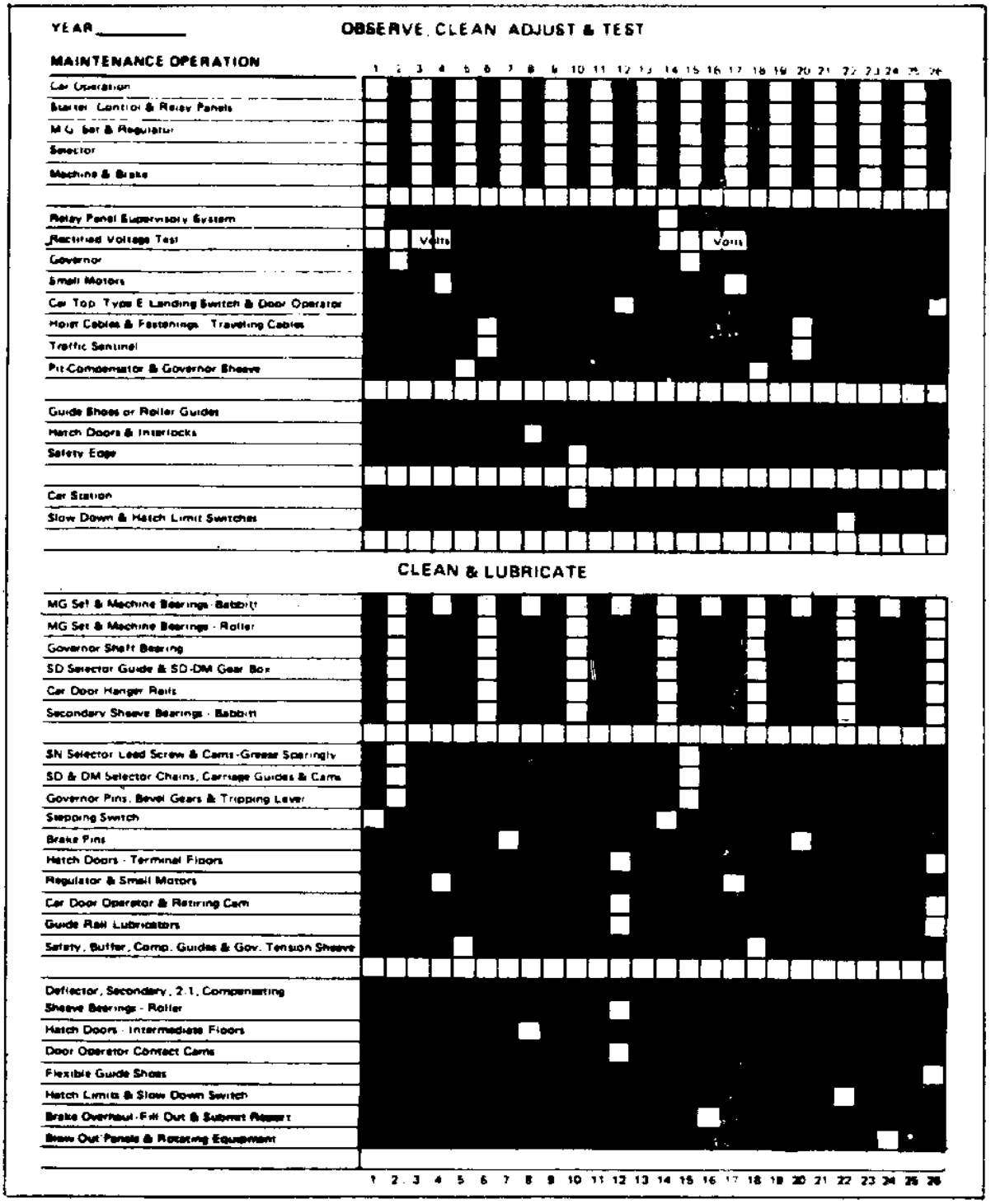

FIGURE 1-2b
Sample Manufacturer's Suggested Adjustment Schedule
For Geared/Gearless Elevators

LUBRICATION GUIDE

EQUIPMENT	WEECO LUBRICANTS
Machine Gear Case—Westinghouse	No. 8
Machine Gear Case—Others	No. 8 or No. 12
Machine Bearings (Babbitt)	No. 1
All Hoist Cable Sheave Bearings (Babbitt)	No. 1
All Hoist Cable Sheave Bearings (Roller)	No. 22
Hoist Motor Bearings (Sleeve Type)	No. 2
Brake Plunger (Graphite may be added)	No. 22
Brake Transmittal Levers & Ball Sockets	No. 22
Brake Pins with Grease Fittings	No. 22
Brake Pins without Grease Fittings	No. 2
Governor Grease Fitting, Bevel Gears & Tripping Lever	No. 22
Governor Pins without Grease Fittings	No. 2
SN Selector Lead Screw	No. 22 or No. 8
Guide Rail Lubricators	No. 1
Door Operator Engine Gear Case	No. 8
Car & Hatch Door Hanger Rails—When Required	No. 22
Door Operator Contact Cams—When Required	No. 22
Safety Mechanism—Pivots & Bearings	No. 2
Oil Buffers	No. 6
Hydraulic Oil	No. 17
All Other Common Bearings, Pins, & Friction Points Req. Grease	No. 22
All Other Small Bearings, Pins & Friction Points Req. Light Lub.	No. 2
For Extreme Cold Conditions Use Low Temp. Lubricant	

FIGURE 1-3a
Sample Manufacturer's Lubrication Guide
For A/C Geared Elevators

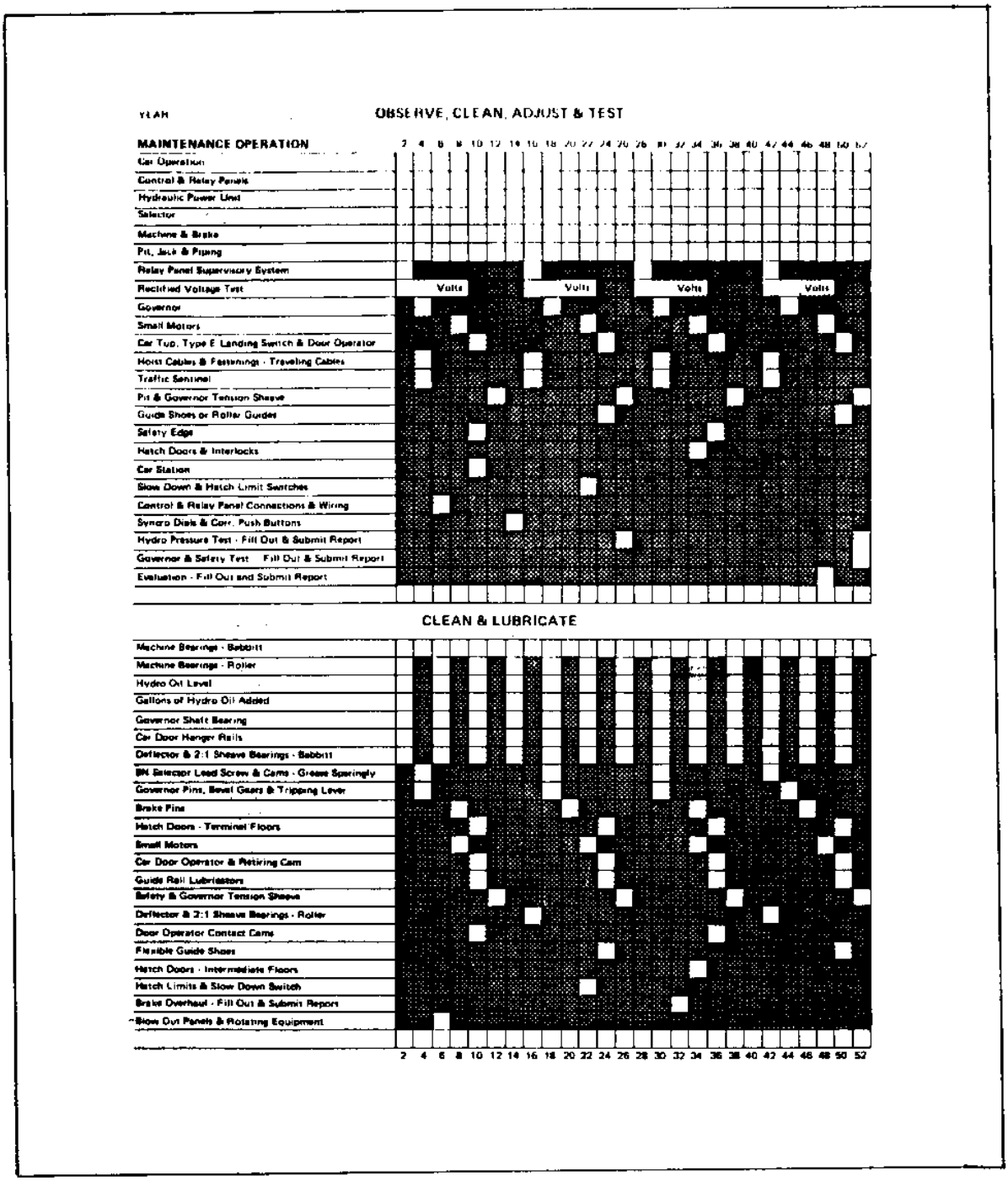

FIGURE 1-3b
Sample Manufacturer's Adjustment Schedule
For Hydraulic Elevators

LUBRICATION GUIDE

B Escalator

Escalator Drive Chain	No. 16
Escalator Reducer	No. 8
Step Link Bushings	No. 16
Escalator Sprocket Bearings	No. 22

B Walk

Walk Drive Belt	Dow Compound No. 7
Walk Reducer	No. 8
Broken Belt Switch Shoe	Dow Compound No. 7
Walk Handrail and Main Drive Chains	No. 16
Walk Main Drive & Idler Pulleys	No. 22
Pallet Bushings	No. 22

B Escalator & Walk

Handrail Guides	Paraffin Wax
All Other Friction Points Requiring Oil	No. 2
All Other Friction Points Requiring Grease	No. 22

For Extreme Cold Conditions Use Low Temp. Lubricant

FIGURE 1-4a
Typical Manufacturer's Lubrication Guide
For Escalator/Moving Walk

YEAR _____

OBSERVE, CLEAN, ADJUST & TEST

MAINTENANCE OPERATION

2 4 6 8 10 12 14 16 18 20 22 24 26 28 30 32 34 36 38 40 42 44 46 48 50 52

Observe Operation

Drive Unit

Indexing

Control Panel

Rectified Voltage Test — Volts — Volts — Volts — Volts

Skirt Switchs

Test All Safety Switches - Submit Report

Turn Around & Side Guide Rollers

Step or Pallet Rollers

Evaluation - Submit Report

Handrails, Brushs & Guides

CLEAN & LUBRICATE

Truss Pans

Escalator Drive Chain 24 Hr. Operation

Walk Drive Belts

Escalator Drive Chains - Standard Operation

Reducer - Check Oil Level

Walk Main & Handrail Drive Chains

Skirts - Apply Silicone Spray

Walk Drive Shaft Bearings

Pallet Bushings

Step Link Bushings

Reducer - 24 Hr. Operation - Change Oil

Reducer - Standard Operation - Change Oil

Escalator Sprocket Bearings

Walk Idler Pulley Bearings

Wax Handrail Guides

2 4 6 8 10 12 14 16 18 20 22 24 26 28 30 32 34 36 38 40 42 44 46 48 50 52

FIGURE 1-4b
Typical Manufacturer's Suggested Adjustment Schedule
For Escalator/Moving Walk

CHAPTER 2

ELECTRIC ELEVATORS

2.1 INTRODUCTION

NOTE: Paragraphs identified with a vertical line in the left margin are inspections that should be made by certified Vertical Transportation Equipment Inspectors only.

2.1.1 Scope

The inspection procedure for electric traction, winding drum and screw elevators included in this chapter is not only an inspection of all safety related functions, but is also an inspection to determine the condition of the equipment and identify areas that need improvement. Proper maintenance is needed to keep the elevator operating. When preventive maintenance is lacking, shut downs will occur. Part I of the ANSI/ASME A17.2 Inspectors Manual for Elevators and Escalators addresses the safety aspect of the inspection of electric elevators. In this chapter we will identify the specific Division of Part I which relates directly to the inspection procedure being followed in this text. It is intended that each noted Division should be reviewed as it is identified and suggested procedures followed. The maintenance and performance considerations of the inspection will be addressed in the following text. See Figures 2-1, 2-2, and 2-3 which show various traction elevator arrangements with component names which will be used in this chapter.

2.1.2 Performance Criteria

As was stated previously, the purpose of this type inspection is to review the entire elevator installation and that includes measuring the operation of specific elements of the elevator system against standards which have been established either by national codes or engineering practice common to the elevator industry. The components of the system selected for testing are those most directly related to safe operation of the elevator and the overall installation, although some items, such as speed of the elevator and door open and close times are related to the efficiency of the operation and grade of service provided. The following is an explanation of the areas that should be tested and criteria to use for evaluating this performance.

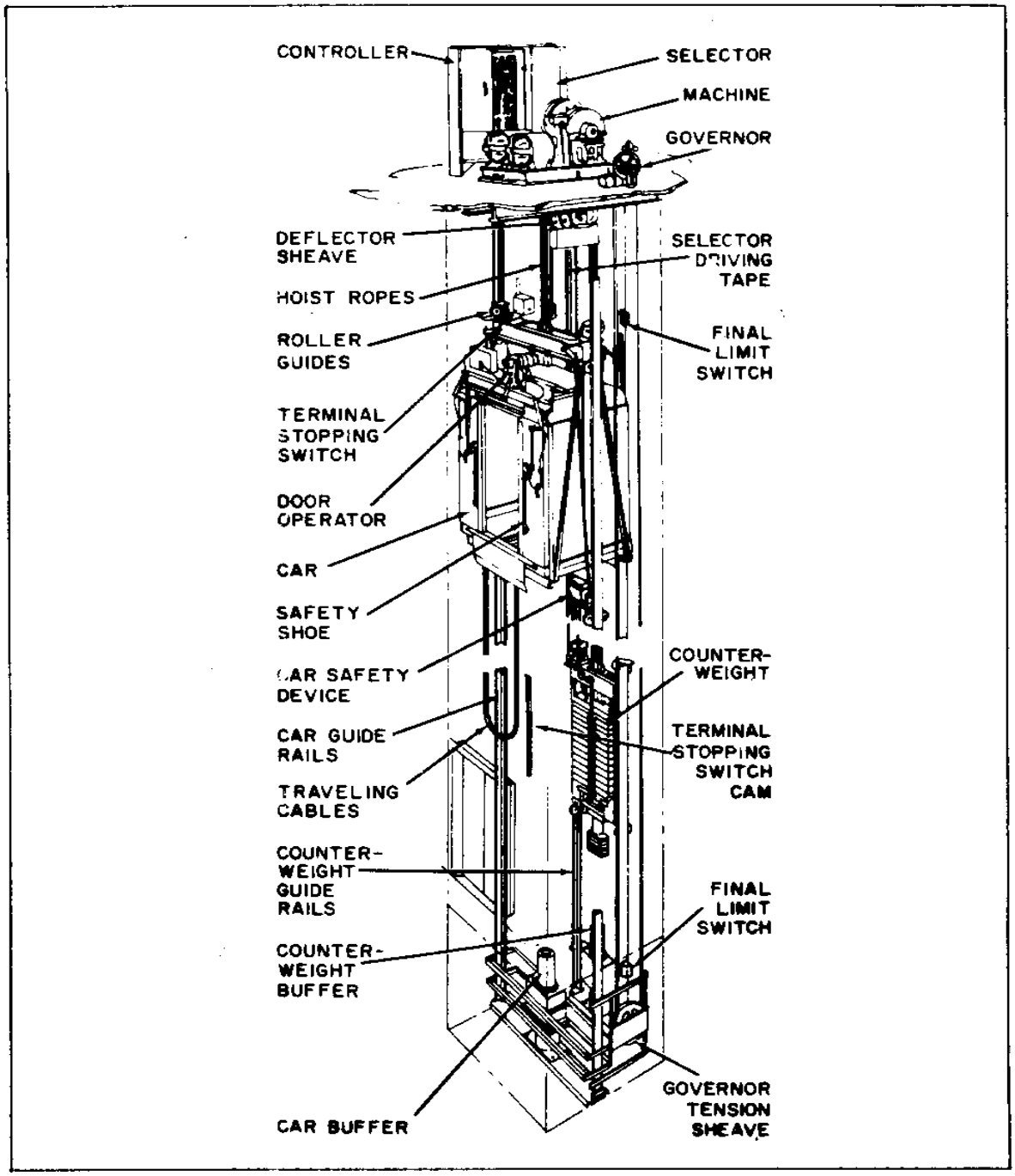

FIGURE 2-1
Typical Installation Of An Overhead One To One (1:1)
Geared Traction Machine Passenger Elevator

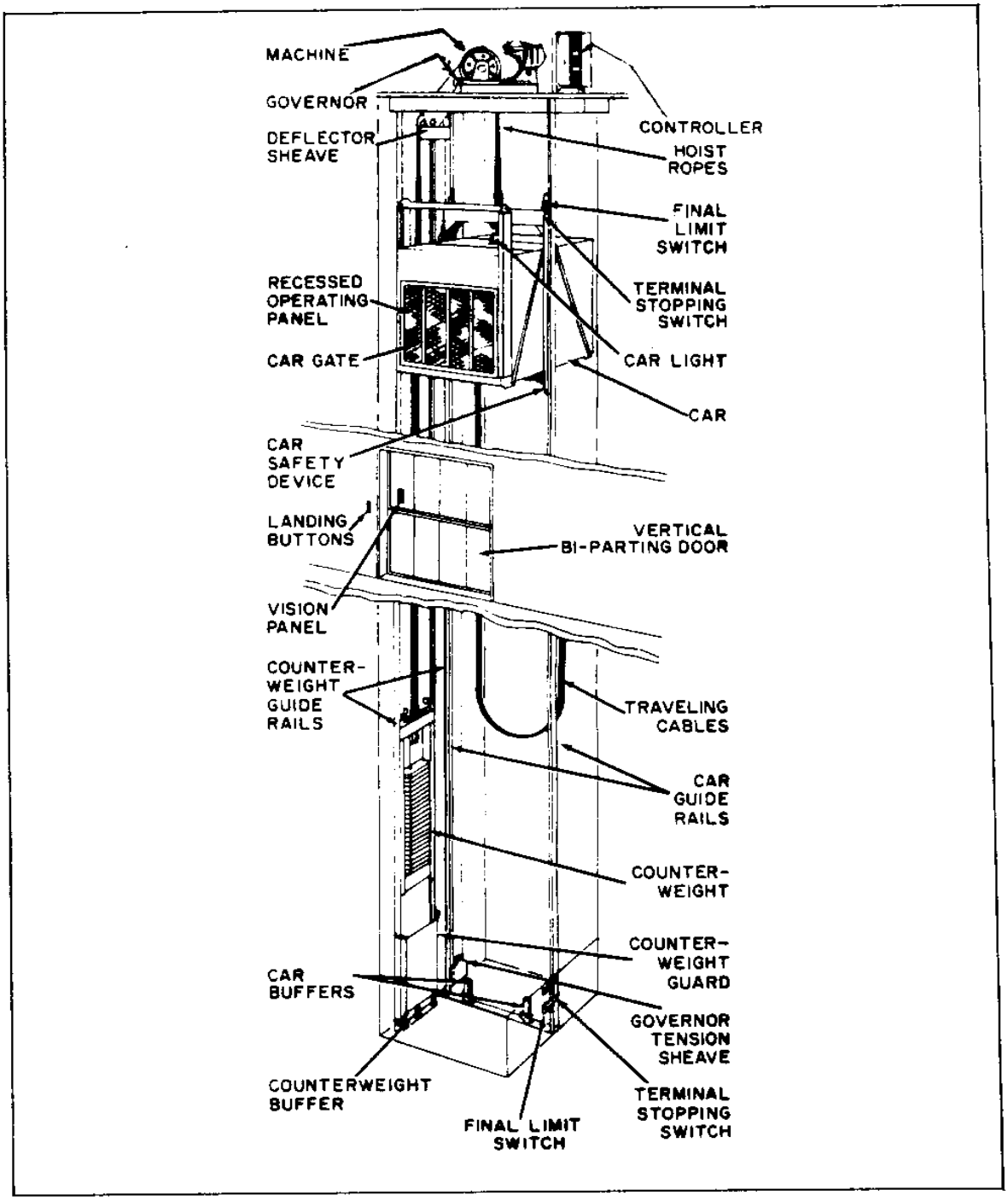

FIGURE 2-2
Typical Installation Of an Overhead
One To One (1:1) Frieght Elevator

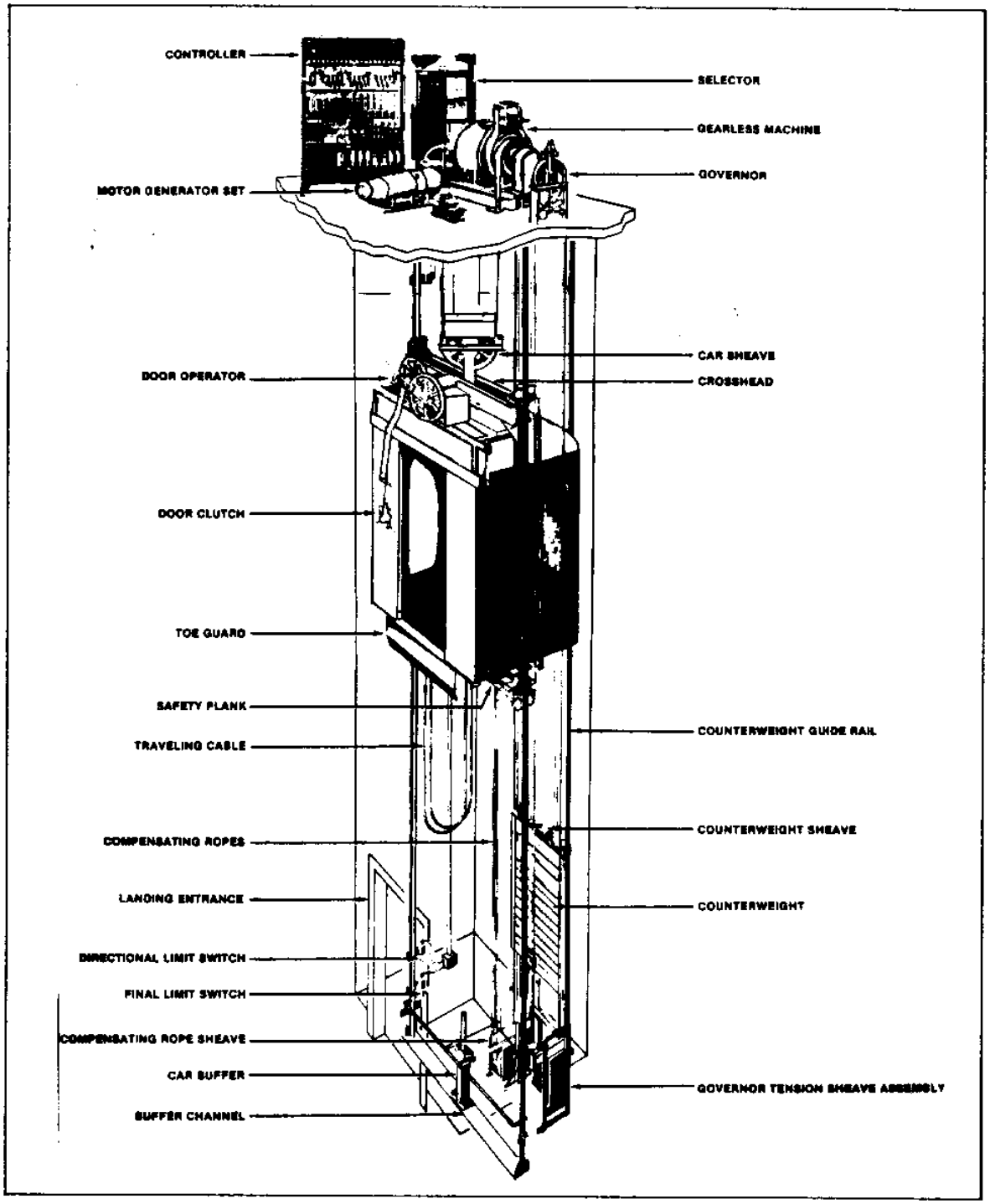

FIGURE 2-3
Typical Installation Of Overhead Two To one (2:1)
Gearless Traction Machine Passenger Elevator

2.1.2.1 Elevator Speed (Electric Traction Elevators). Elevator operating speed is measured with a tachometer while the elevator makes a full run through the hoistway with no load in the car. Operating speed should be maintained at a level of plus or minus 6% of the rated speed (to be found on the governor rating plate or the crosshead on the car) under any load condition in both directions of travel. The 5% figure is reasonable tolerance for most equipment. However consideration must be given to the actual equipment being examined. Generally, equipment installed before 1975 was not designed to include the speed regulation circuitry used today. In these cases a greater amount of variation must be expected. All equipment should be capable of maintaining a variation level of 10% regardless of age.

2.1.2.2 Door Opening Time. Measured from the instant the doors begin to open until the doors are fully open. Door opening time should be as fast as possible to provide efficient elevator service. The recommended door times are based on the fastest speed obtainable with the door operation equipment installed while providing smooth operation and long equipment life. (See Table 2-1).

2.1.2.3 Door Closing Time. Measured from the instant the doors begin to close until the doors are fully closed. The A17.1 Code limits door closing time by defining the level of kinetic energy generated during door closing operation. The closing time is determined by the approximate A17.1 Code requirements based on average door weight. (See Table 2-1).

2.1.2.4 Door Hold Open Time. Measured from the instant the doors are fully open until the doors begin to close when the car stops in response to a hall call. The door hold open time should be adjusted to best meet the needs of the passengers.

2.1.2.5 Door Closing Force. Measured with a door pressure gauge as the doors attempted to close. The measured value is the pressure required to prevent the doors from closing under power. ANSI/ASME A17.1 Safety Code for Elevators and Escalators requires that door pressure be no more than 30 lbs.

2.1.2.6 Performance Times (floor to floor times). Performance time is measured from the instant the doors begin to close on one floor until the elevator is stopped level with the next successive floor, up or down, with the car doors approximately 3/4 open. A calculated reasonable standard time for various types of elevators are shown in Table 2-2.

2.1.2.7 Acceleration, Deceleration, Floor Stopping and Noise. The car should stop at each landing at a point no greater than 3/8" above or below the floor. Acceleration and deceleration should be smooth with no noticeable "Steps" to attain or reduce speed. Stopping should be smooth. No unusual noises should be heard.

TABLE 2-1

Door Open/Close Time Selection Chart
(Times in seconds, Tolerance-Plus or minus .1 seconds)

	DOOR OPEN[2] CLOSE[2]				DOOR	
	MEDIUM SPEED (1 1/2 F.P.S.)		HIGH SPEED (2 1/2 F.P.S.)			
DOOR WIDTH[1]	SIDE OPNG	CENTER OPNG	SIDE OPNG	CENTER OPNG	SIDE OPNG	CENTER OPNG
32"	2.5	1.8	1.9	1.5	3.1	2.0
34"	2.7	1.8	2.0	1.5	3.3	2.1
36"	2.8	1.9	2.1	1.5	3.5	2.1
38"	2.9	2.0	2.1	1.6	3.6	2.2
0"	3.0	2.0	2.2	.6	3.8	2.3
42"	3.1	2.1	2.3	1.6	4.0	2.4
44"	3.2	2.1	2.3	1.7	4.1	2.5
46"	3.3	2.2	2.4	1.7	4.3	2.6
48"	3.5	2.2	2.5	1.7	4.3	2.6
50"	3.6	2.3	2.5	1.8	4.6	2.7
52"	3.7	2.3	2.6	1.8	4.8	2.8
54"	3.8	2.4	2 .7	1.8	5.0	2.9

1. Find clear door opening width in the 1st column. Select door opening time from box under correct door type (side opening or center opening).

2. Values are based on 7'-0" to 7'-6" high doors. Adjust values for 7'-6" to 8'6" high door by adding he following factors:

   1/2 second for widths up to 42"
   1 second for widths over 42"

TABLE 2-2
Traction Elevators
Floor-To-Floor Performance Time Selection
(Seconds = + 0.2)

SPEED (F.P.M.)	DOOR TYPE AND OPENING WIDTH[1] 36"	42"	48"	54"	ADJUSTMENT PER FOOT OF TRAVEL FROM 12'-0" STANDARD[2] (SECONDS)
			SIDE OPENING		
200	11.2	12.0	12.8	13.6	0.3
250	10.8	11.6	12.5	13.3	0.25
300	10.4	11.3	12.1	2.9	0.2
350	0.2	11.1	11.9	12.7	0.2
500	9.1	10.0	10.8	11.6	0.18
700	9.1	10.0	10.8	11.6	0.18
800	9.1	10.0	10.8	11.6	0.18
1000	9.1	10.0	10.8	11.6	0.18
1200	9.1	10.0	10.8	11.6	0.18
			CENTER OPENING		
200	9.5	10.0	10.5	11.0	0.3
250	9.2	9.7	10.2	10.7	0.25
300	8.9	9.3	9.8	10.3	0.2
350	8.7	9.1	9.6	10.1	0.2
500	7.6	8.0	8.5	9.0	0.18
700	7.6	8.0	8.5	9.0	0.18
800	7.6	8.0	8.5	9.0	0.18
1000	7.6	8.0	8.5	9.0	0.18
1200	7.6	8.0	8.5	9.0	0.18

1. Values are based on 7'-0" to 7'-6" high doors. Adjust values for 7'-6" to 8'-6" high doors, by adding the following factors:

1/2 second for widths up to 42"
1 second for widths over 42" 2

Values are based on 12'-0" floor-to-floor height. Adjust using factors noted for variation from this standard.

Find rated speed in the 1st column. Select standard floor-to-floor performance time from box under correct door type (side opening or center opening) and clear door opening width. Adjust this time by adding factor if doors are over 7'-6" high, and adding or subtracting appropriate amount per foot of travel over or under standard floor height of 12-0".

NOTE: All times are based on heavy duty, high speed, door operating equipment and optimum adjustment. On geared applications with medium speed door operators, add 1.0 second. on gearless applications, add 0.5 second for less stringent requirement.

2.2 INSIDE THE CAR INSPECTION

2.2.1 Scope

Division 101 of the A17.2 Manual covers the inspections made from inside the car. This section of the A17.2 Manual is quite complete and covers the majority of the items to be examined. However, the Inspector must also examine the inside of the car to be sure all operating equipment is functioning in its intended manner and that the appearance of the area is acceptable to the riders. This same consideration should also be exercised when examining freight elevators.

2.2.2 Operating and Signalling Devices

All operating and signalling devices should be operating as intended and check to see that all fastenings are in place and secure. The signalling devices are important to the elevator operation because they are designed to project operating information for the purpose of expediting traffic movement. Examples of this information are: which car is moving up or down, which car is loading, where the car is in the hoistway, was your call registered, etc. Also, it should have handicapped identification for operating devices that are provided and properly displayed.

2.2.3 Car Enclosure

The overall enclosure should not have loose or missing components or hardware. Handrails, especially, should be properly secured. When something is missing or loose, total safety is compromised. An example of this is suspended ceiling panels. Many accidents have resulted from these not being properly installed. Another example is the securing of the service cabinet of many main car operating panels. If this is not properly closed and locked, it is exposing car operating controls to the general public which are, by design, restricted. The A17.1 Code

requires that the control switches for the cab lights be key operated or located under locked cover, and when service cabinets are used, they normally serve as the locked cover for this switch. Therefore, a service cabinet which is not secured is a A17.1 Code violation.

2.2.4 Car Doors

Scrape marks on the inside of the car doors are not always a sign of misuse of the elevator user. In fact, the majority of the marks are caused by improper maintenance. Worn or misaligned guides, worn or damaged hangers or hanger rollers are prime reasons. Another cause is screws protruding from the back of the car operating panel. This occurs after repairs are made in the car station using improper fastenings.

2.2.5 Car Sill

Door sills should not be damaged and should be kept clean. Good door operation is essential for a good operating elevator. Every component of the car door and hoistway door system is a critical factor in good door operation. If any component is not properly positioned and maintained, the entire elevator system is in trouble. The examination of these systems is best done from the top of the car and therefore, will be fully addressed later in the section.

2.2.6 Freight Elevator Enclosures

Freight handling elevators are, by their intended use, subject to damage. Just because it is a freight elevator, the degree of inspection should not be lessened. In fact, it should be strengthened because of its vulnerability to damage. Car gates are a prime example whether they are of the open type construction (example: wire mesh, expanded metal, wooden slate, etc.) or solid panels. Many times you will find damaged gates. Open type construction is very susceptible to distortion and could result in compromising the protection required by the A17.1 Code. This must be constantly checked. Vision panels seem to be the major victim on solid gates. There is no question that the car must not be allowed to operate with a missing glass, however, attention should be given to see that replacement glass is the type required by rule 204.2e(2) of A17.1 Code. The same close examination should be given to the door system on this type of elevator that is given to passenger type elevator doors. They are also essential to a good operating elevator.

2.2.7 Firefighter's Service Instructions

All elevators installed under the requirements of the 1981 edition of the A17.1 or later are required to have instructions for operating the elevator under Phase II - Fire Fighter's Service permanently mounted adjacent to or incorporated with the switch. This should be in place and properly displayed.

2.2.8 Performance

Elevator performance must be checked and compared with previous test data and criteria. This would include door opening time, door closing time, door hold open time and floor to floor performance times. Also, acceleration, deceleration, and floor stopping accuracy must be included. This will determine if the system is operating at its full potential or if adjustments are needed to obtain a system operating at design capabilities. Unusual noises should also be noted. Close investigation can be made by qualified personnel when making the inspection on top of the car, in the pit, or in the machine room.

2.3 OUTSIDE CAR INSPECTION

2.3.1 Hoistway Entrances

Division 102 of the A17.2 Manual describes the various inspections which are to be made from outside the hoistway. Hoistway entrances are the major items that are examined at this time. Items 100.1 to 100.5 as well as item 103.12 and 103.13 of the A17.2 Manual are included by reference in the examination procedure of the hoistway enclosure and doors. Dependent on the manufacturer and application, some of the items included in 103.12 and 103.13 are better examined with the car at the floor and the doors and gates in the open position.

2.3.2 Closing Force

Division 119 of the A17.2 Manual covers the testing of the closing force of the door system. It is a simple test, and it is good practice to do it on each inspection. The code requires it to be done at least annually, but it does not preclude it being done more often.

2.3.3 Access Switch Operation

Item 102.2 of the A17.2 Manual requires the examination of the hoistway access switch or switches. Some manufacturers and specifications require the operating zone of this feature to be zoned in such a manner that the car movement in the down direction be restricted. Extreme caution should be used when operating this feature.

2.3.4 Emergency Key Access

Item 102.3b of the A17.2 Manual covers the examination of the emergency key access to the hoistway. The access hole through the hoistway door is specifically designed to limit its use. However, these are very often modified to allow access with the use of screw drivers, coat hangers, etc.

Special attention should be given to see that these holes are checked to see that they have not been modified and all safety considerations are being met. If found modified, then the condition should be reported immediately so that corrective measures can be instituted.

2.3.5 Operating And Signalling Devices

Check that all operating and signalling devices are operating in their intended manner and that all fastenings are in place and secure.

2.3.6 Firefighter's Service Instructions

Elevators installed under the requirements of the 1973 edition of the A17.1 Code or later are required to have instructions for operating the elevator under Firefighters' Service permanently mounted adjacent to or incorporated with the switch at the designated level. Elevators installed after the 1981 edition of A17.1 Code require instruction be posted at the designated level and in the car. The corridor instruction should describe Phase I - Emergency Recall Operation and the car instructions address Phase II Emergency In-Car Operation. One should check to see that these are in place and properly displayed.

2.3.7 Counterweights In Separate Hoistway

Item 102.4 of the A17.2 Manual covers the inspection of ropes and fastening on counterweights when counterweights are located in enclosures outside the hoistway. Special consideration should be given to assure this is not overlooked when separate counterweights are provided.

2.4 CAR TOP INSPECTION

2.4.1 Scope

Division 103 of the A17.2 Manual describes the various inspections which are made from the top of the car. The beginning of this section described various safety precautions that should be followed when working on top of a car. These should most definitely be followed when making this part of the inspection. Any car not having a top of car operating device shall require two (2) inspectors. A recommendation will be made that a car top operating device be added.

2.4.2 Wire Rope Inspection

The inspection procedures described in Division 103 are very complete and should be followed very closely. one of the procedures described is hoist rope inspections. Figures 2-4 through 2-6 are provided to show the various roping arrangements which may be encountered.

2.4.3 Car Top

The inspector should check to see that the car top and associated equipment have been cleaned. A clean installation definitely eliminates a fire hazard and increases the operating life of the equipment plus assures good operation. Many broken and worn parts are discovered during the cleaning process and are repaired or replaced long before they result in a shut down.

2.4.4 Door Operator

Door operator equipment should be closely checked for broken or worn parts. The door operator is subject to much physical abuse because of its constant operation. Leaking or exposed lubrication is usually associated with a developing problem such as deteriorated seals or enlarged openings resulting from wear. The condition should be closely checked. Good housekeeping on the door operator and associated equipment is essential to reduce wear.

2.4.5 Hoistway Entrances

Each hoistway entrance and its associated hardware should be closely checked for wear, adjustment and proper lubrication during each inspection. (See Figures 2-7 and 2-8) Because of its constant use, it must be kept in top condition. Doors out of adjustment do not operate properly, This directly relates to the overall installation performance. It is an absolute must to check door and eccentric adjustments on hanger rollers on horizontal sliding doors. Wear, resulting from use, requires the continuing adjustment of the close operating tolerance. When not properly adjusted to this close tolerance, there is a possibility the door could come off the track, exposing a hazardous condition. Hoistway door equipment is subject to heavy accumulation of lint and dust. Constant attention must be given to these areas by the person performing maintenance to keep up with housekeeping requirements. It is the inspector's responsibility to check and see that they are kept clean or shut downs will result.

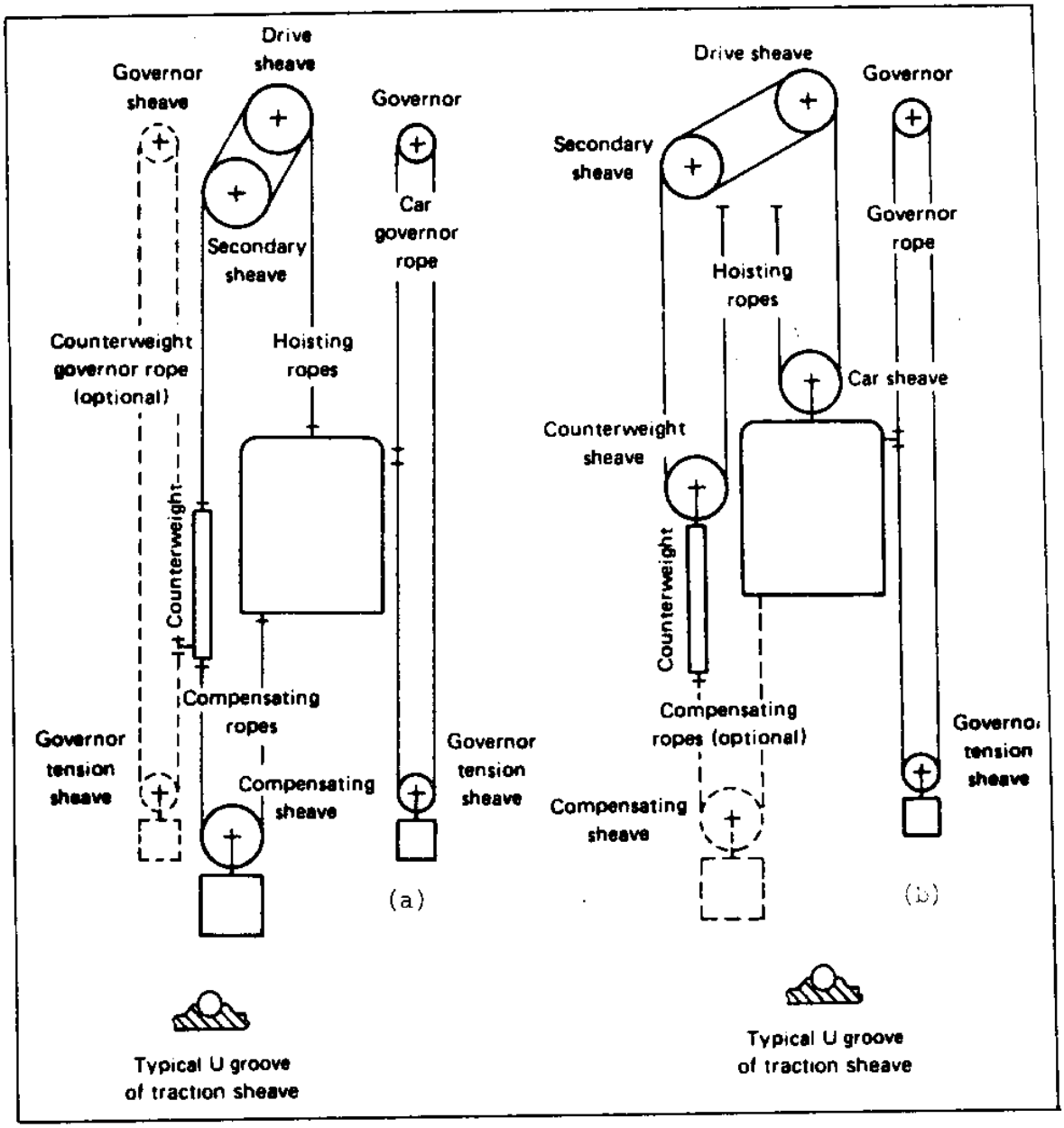

FIGURE 2 -4
(a) 1:1 Double-Warp Overhead Traction Machine
Roping arrangement

(b) (2:1) Double-Wrap Overhead Traction Machine
Roping arrangement

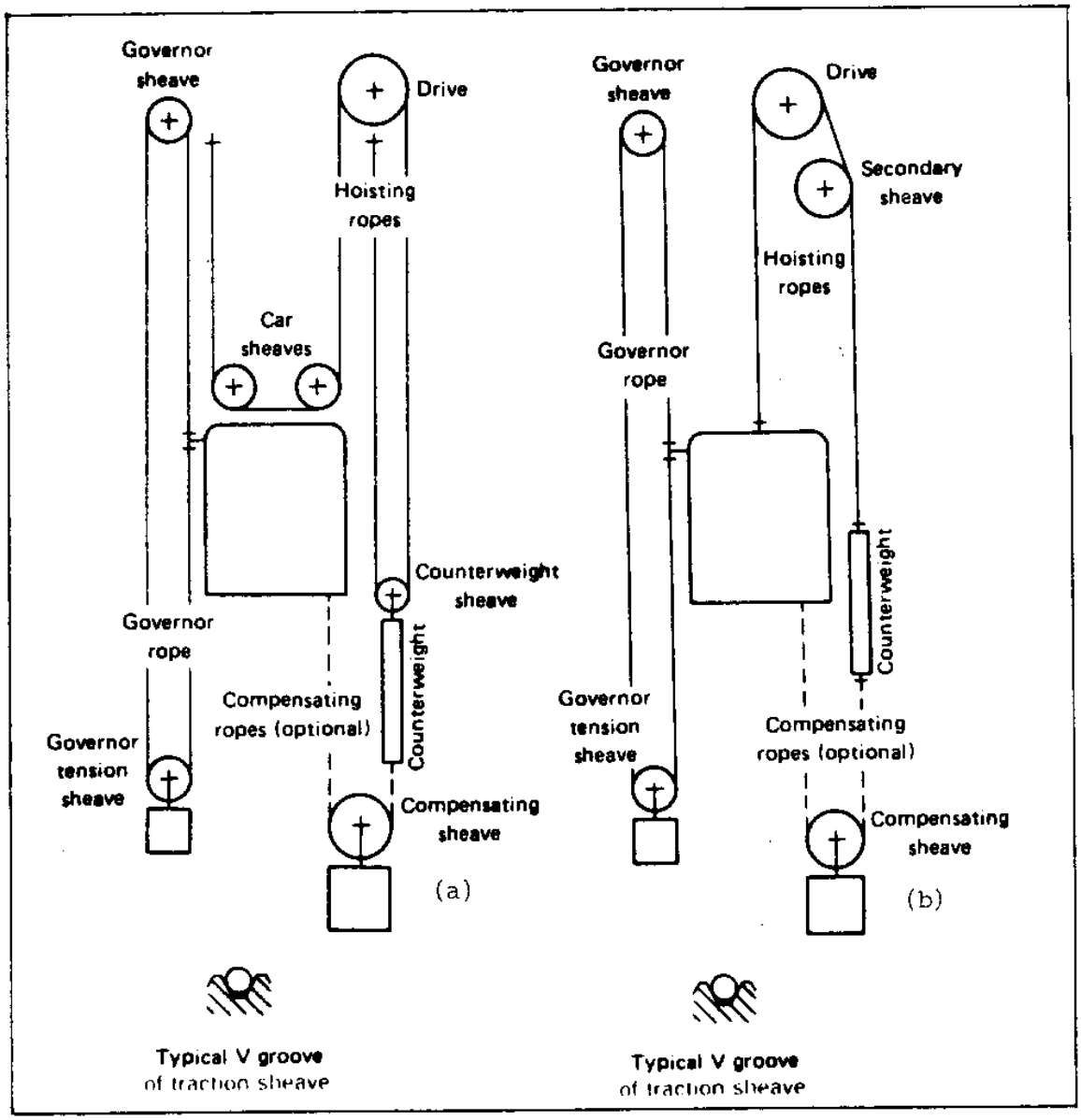

FIGURE 2-5
(a) 2:1 Single-Warp Overhead Traction Machine
Roping arrangement for freight elevators

(b) 1:1 Single-Wrap Overhead Traction Machine
Roping arrangement for passenger
and freight elevators

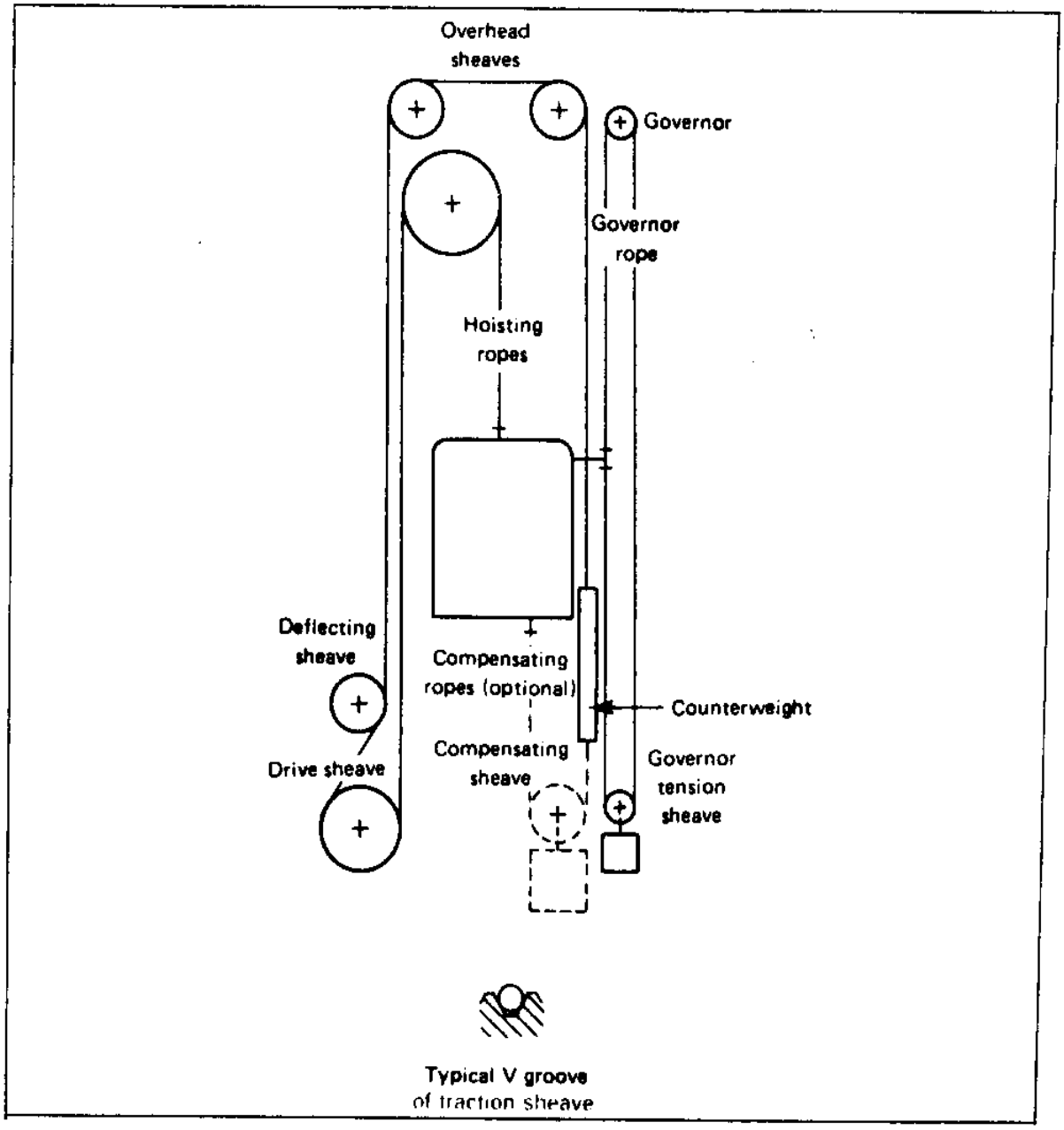

FIGURE 2-6
1:1 Single-Warp Basement Traction Machine
Roping arrangement for passenger
or freight elevators

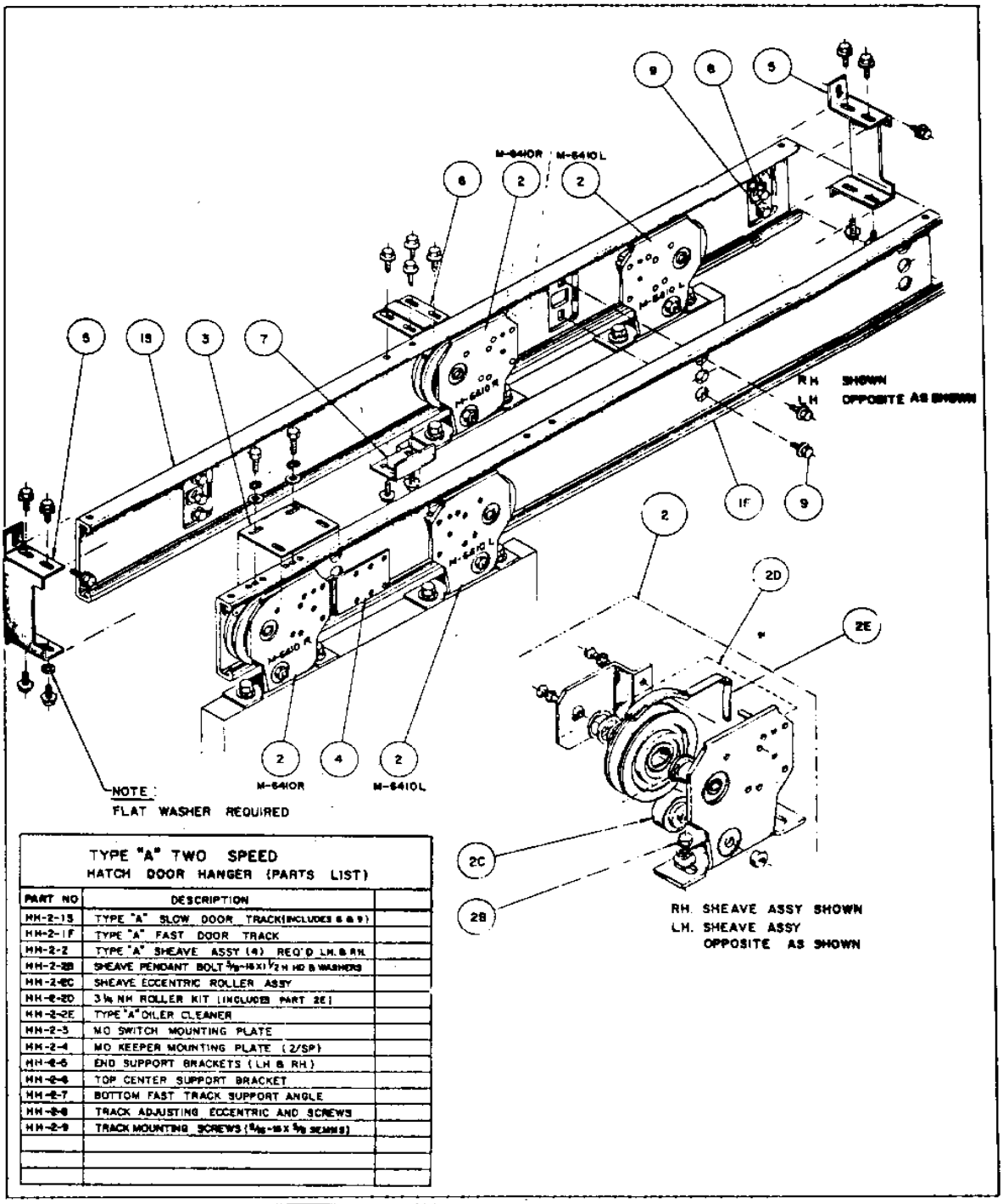

TYPE "A" TWO SPEED
HATCH DOOR HANGER (PARTS LIST)

PART NO	DESCRIPTION	
HH-2-1S	TYPE "A" SLOW DOOR TRACK(INCLUDES 6 & 9)	
HH-2-1F	TYPE "A" FAST DOOR TRACK	
HH-2-2	TYPE "A" SHEAVE ASSY (4) REQ'D LH. & RH.	
HH-2-2B	SHEAVE PENDANT BOLT 3/8-16 X 1/2 H HD & WASHERS	
HH-2-2C	SHEAVE ECCENTRIC ROLLER ASSY	
HH-2-2D	3 1/8 NH ROLLER KIT (INCLUDES PART 2E)	
HH-2-2E	TYPE "A" OILER CLEANER	
HH-2-3	MO SWITCH MOUNTING PLATE	
HH-2-4	MO KEEPER MOUNTING PLATE (2/SP)	
HH-2-5	END SUPPORT BRACKETS (LH & RH)	
HH-2-6	TOP CENTER SUPPORT BRACKET	
HH-2-7	BOTTOM FAST TRACK SUPPORT ANGLE	
HH-2-8	TRACK ADJUSTING ECCENTRIC AND SCREWS	
HH-2-9	TRACK MOUNTING SCREWS (5/16-18 X 5/8 SEMMS)	

FIGURE 2-7
Typical Horizontal Sliding Hoistway Door Hanger Assembly

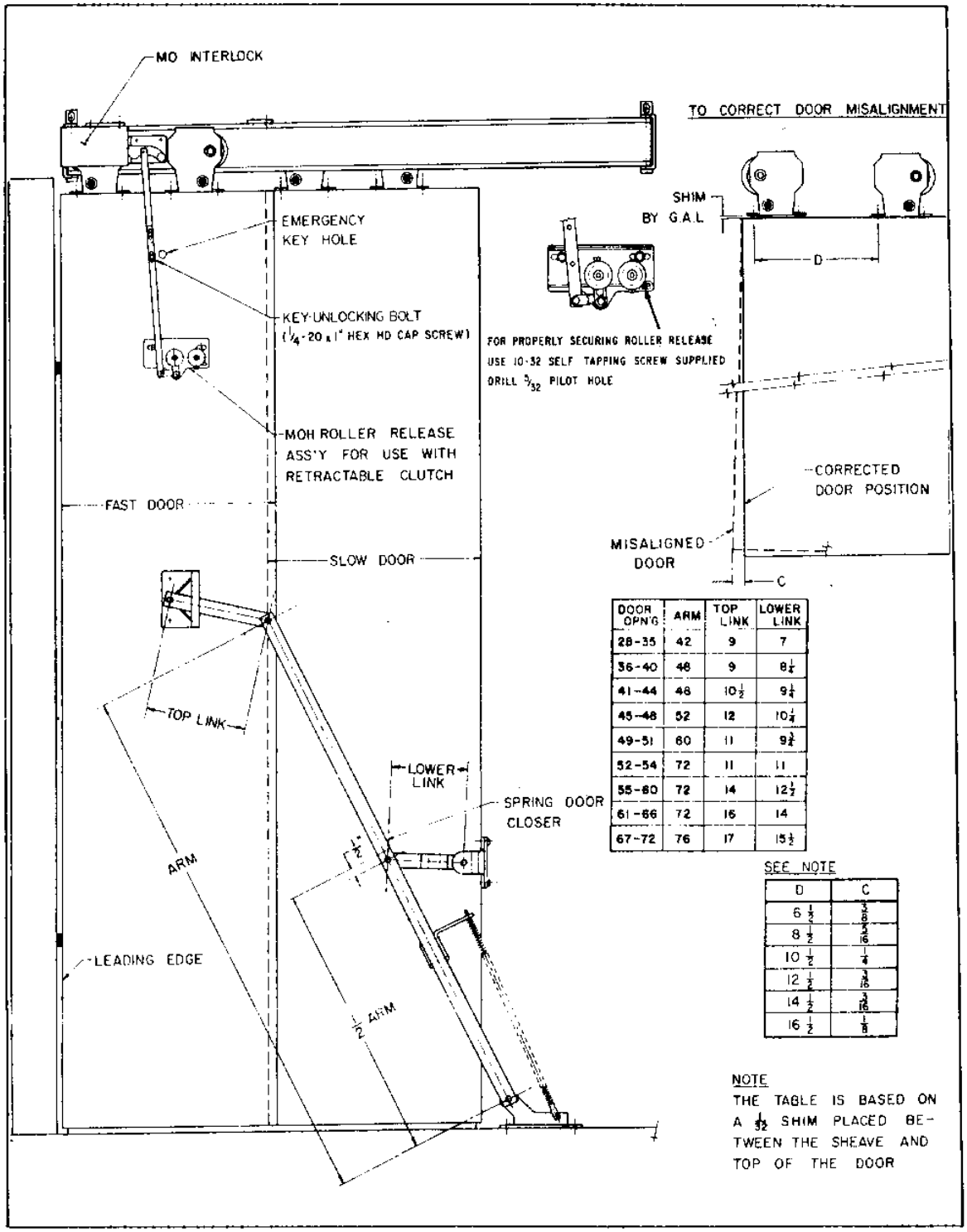

DOOR OPN'G	ARM	TOP LINK	LOWER LINK
28-35	42	9	7
36-40	48	9	8 1/4
41-44	48	10 1/2	9 1/4
45-48	52	12	10 1/4
49-51	60	11	9 3/4
52-54	72	11	11
55-60	72	14	12 1/2
61-66	72	16	14
67-72	76	17	15 1/2

SEE NOTE

D	C
6 1/2	3/8
8 1/2	5/16
10 1/2	1/4
12 1/2	3/16
14 1/2	3/16
16 1/2	1/8

FIGURE 2-8
Typical Horizontal Sliding Hoistway Door Assembly

2.4.6 Covers And Guards

The inspector should check to see that all covers and guards are in place. They are provided to prevent accidental contact with moving devices or exposed electrical components. This protection is not being provided if the cover or guard is not properly mounted in place.

2.4.7 Hoistway Ventilation

The means for hoistway ventilation should be examined. Many times ventilation means have been found blocked either accidentally or intentionally.

2.4.8 Wiring

All electrical wiring should be checked for damage. Many times conductors and conduit have become damaged when working around the car top or hoistway. This must be constantly inspected to maintain a safe environment.

2.4.9 Guides

The inspector should closely examine the car guides and counterweight guides for wear, and that proper adjustment has been maintained.

2.4.10 Hoistway Housekeeping

The hoistway should be kept clean. Build-up of lint, dirt and trash on beams, ledges, brackets and hoistway entrance sills presents a serious fire hazard. A spark can and does cause a fast moving flash fire.

2.4.11 Load Weighing Devices

Many cars are equipped with load weighing devices. These are used for various control functions. The most popular is the "by passing of corridor calls" when the car has reached a predetermined load or dispatching a car from a floor when it is loaded. These should be checked to see that switches are operational and periodically checked to see that load settings are remaining constant. These devices are provided to improve elevator performance and must be operational.

2.5 OVERHEAD MACHINERY SPACE AND MACHINE ROOM INSPECTION

2.5.1 Scope

Division 104 of the A17.2 Manual describes the various inspections which are made in the overhead machinery space and machine room. The beginning of this section describes various safety precautions that should be followed when making this part of the inspection.

2.5.2 Main Line Switch

The inspector should closely examine the condition of the main line switch before inspecting any moving part because opening the switch may not have removed all power from a particular elevator. This condition is very prevalent in group elevator installations. Since 1975, the ANSI/NFPA-70 National Electrical Code - Rule 620-51 has required a sign be posted on the switch warning of this condition. The present wording of ANSI/NFPA-70 1984 is as follows:

620-52. Power from More than One Source.

(a) Single and Multi-Car Installations. On single and multi-car installations, equipment receiving electrical power from more than one source shall be provided with a disconnecting means from each source of electrical power within sight of the equipment served.

(b) Warning Sign for Multiple Disconnecting Means. Where multiple disconnecting means are used and parts of the control panel remain energized from a source other than the one disconnected, a warning sign shall be mounted on or adjacent to the disconnecting means. The sign shall be clearly legible and shall read "Warning - Parts of the control panel are not de-energized by this switch."

(c) Interconnection Multicar Control Panels. Where interconnections between control panels are necessary for the operation of the system on multicar installations that remain energized from a source other than the one disconnected, a warning sign in accordance with Section 620-52(b) shall be mounted on or adjacent to the disconnecting means.

It is mandatory this sign be on all equipment installed after 1975. It is recommended that such warning signs be placed on all such equipment installed before 1975. It is a constant reminder to persons working on the equipment that all power is not removed when the switch is open.

2.5.3 Speed Governor

Inspection of the speed governor is a very critical part of the inspection. The A17.1 Code and A17.2 Manual specifically address the inspection requirements for this device. It is one half of the function that makes elevators safe with the car safety device being the other half. The certified inspector should follow the steps outlined in the A17.2 Manual as close as possible to assure nothing is overlooked. Always be aware that governor parts do wear, and governors do have to be rebuilt or replaced. Leaking or exposed lubrication is a good indication of deteriorating seals, enlarged openings resulting from wear, or worn gears. Also, be sure governor seals are in place and that they are properly located. The seal most used is the lead block and wire type, but there are other types which provide the same degree of security. The seal is used to indicate whether adjustments have been modified from set position. Be sure that seals are placed in such a position that they are broken if adjustment changes are made. Occasionally, seals are found in a position that modification can be made and the seal remains intact. Mistakes in the type or size of governor rope are often found. Governors are designed to operate with a specific size and type of rope. Any change will alter the operation of the car stopping mechanism. An example of this is a rope of smaller than design diameter, which could allow the governor jaw to close without gripping the governor rope, thus resulting in the car safety not applying. Changes in the type or size of the specified hoist ropes will change the rope to a sheave traction factor resulting in either insufficient traction or excessive traction. Either condition can result in dangerous consequences. Insufficient traction results in the drive machine losing control of the car and counterweight. This could result in an overhauling load from either side, causing a runaway condition. Too much traction could result in the machine lifting either the car or counterweight if the other were to stop and the machine continued to run. The traction factor is extremely critical to safe elevator operation.

2.5.4 Traction Sheave

Traction sheave wear is usually just detected by finding metal particles under the sheave. However, an inspector should watch for the signs that lead to wear before you see the results. The major cause of wear is uneven rope tension. The sheave is designed to carry the load spread over all the ropes. When one is under more tension than the others, this load is transferred to the tighter rope. This can usually be seen by laying a straight edge across the ropes in the drive sheave grooves. (See Figures 2-9 and 2-10). All ropes should touch the straight edge. Ropes that do not touch indicate uneven tension or possible sheave wear.

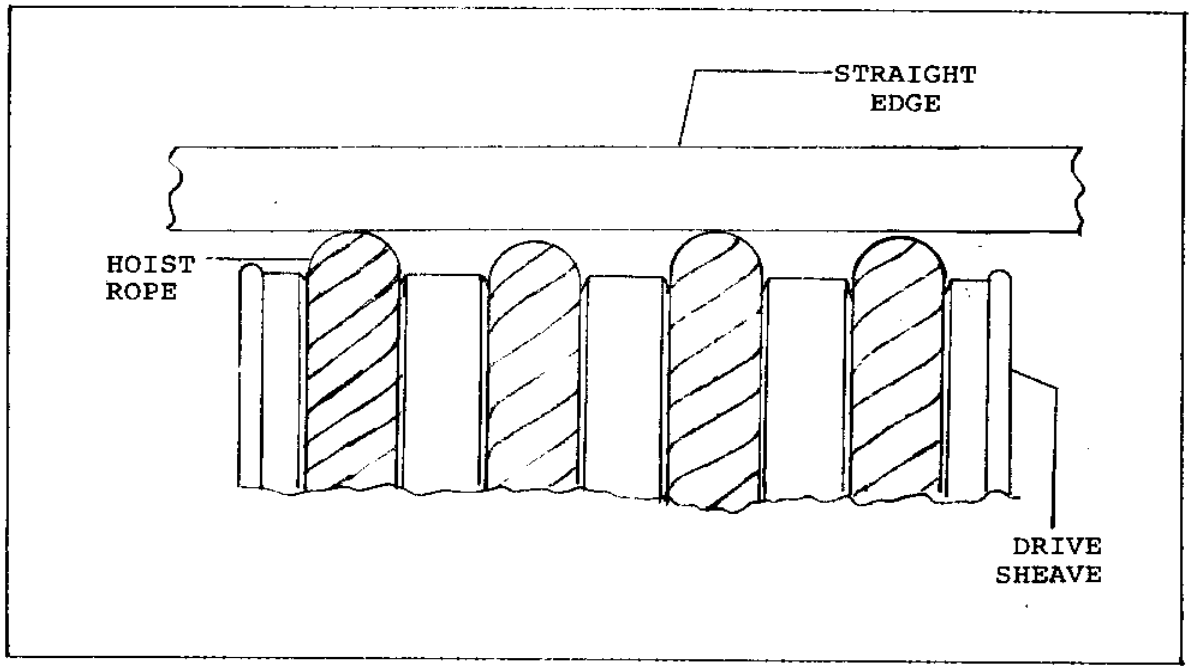

FIGURE 2-9
Improper Rope Positioning In Drive Grooves

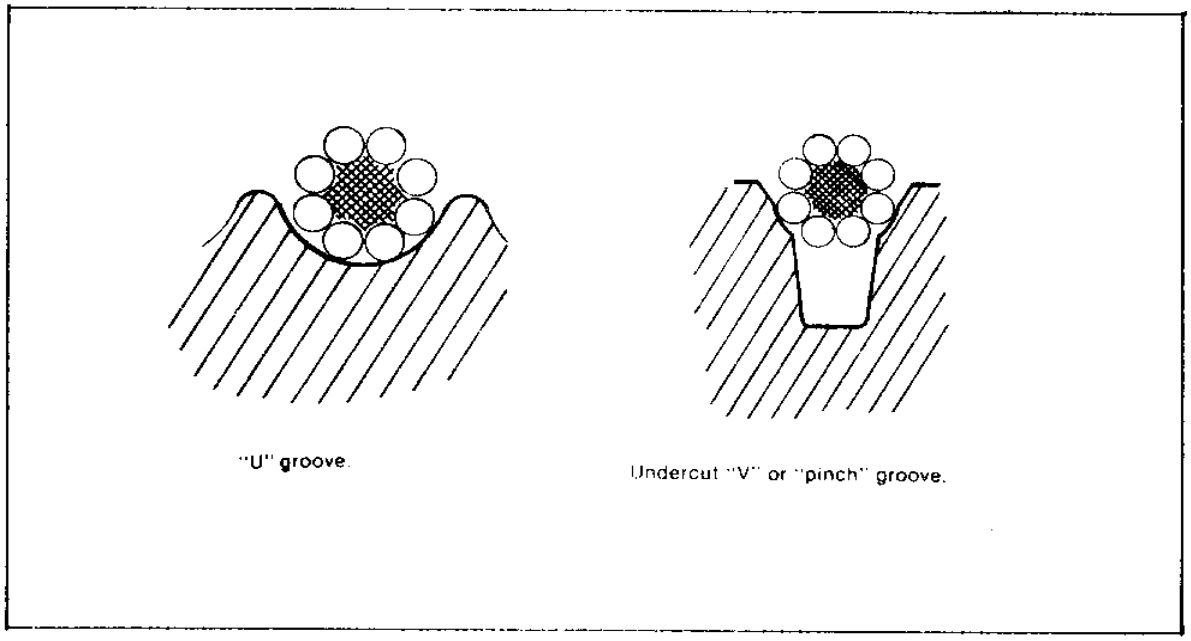

FIGURE 2-10
Rope Positioning In Drive Sheave Grooves

Occasionally, an inspector will find a sheave with one or more unused grooves. Most of the time it is not used by design, but it never hurts to check the cross head data tag to verify. It is good practice to confirm the data for the actual rope size and construction because mistakes are found.

2.5.5 Guards

Many times guards are removed to service equipment and in haste are not returned to their proper place. All guards must be in place and securely fastened.

2.5.6 Gears And Bearings

A thorough check of the hoist machine gears and bearings should be made on each inspection trip. (See Figure 2-11 and 2-12). Problems in these areas do not happen over night. If found early, they can greatly reduce repair costs and time. Bearing problems are detected by sound and/or heat. Gear problems are detected by examining the wear pattern on the gear. This will show that the gear is not properly aligned with the worm causing the point of contact to be not in the proper position or that the gear is bottoming or contacting the worm shaft. Excessive heat damage, most likely caused by low oil or break down of oil, can also be detected. It is indicated by pock marks in the face of the gear tooth or teeth. (They resemble casting defect marks).

2.5.7 Hoist Motor

It is very important to check the hoist machine motor. Commutator or slip rings damage are indications that something is not right and needs immediate attention. (see Figure 2-13). Become very familiar with these signs and be constantly on the look out for them. Elevator performance is directly related to good electrical continuity through the commutator or slip rings. Also, heat is always a major concern and is a problem indicator. The source of the heat should be investigated and corrective action recommended. Motors should be kept clean to assure proper air passages which are needed for cooling. Connections not properly made may result in poor electrical conduction and points of resistance. This condition creates heat. Improper adjustments can force motor windings to carry more current which produces heat and this heat will cause insulation to deteriorate.

2.5.8 Brake

Closely examine both the mechanical actions of the brake, and the electrical components. The A17.2 Manual addresses the examination of the mechanical action. As for the electrical components, the brake coil leads, connections, and windings should be examined to check insulation conditions and physical connections.

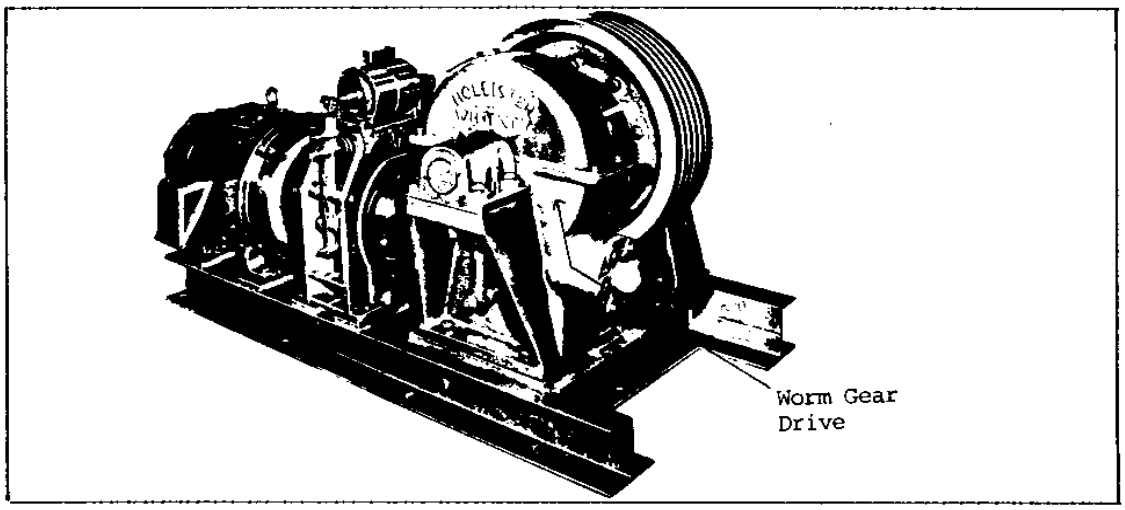

FIGURE 2-11
Geared Traction Hoist Machine

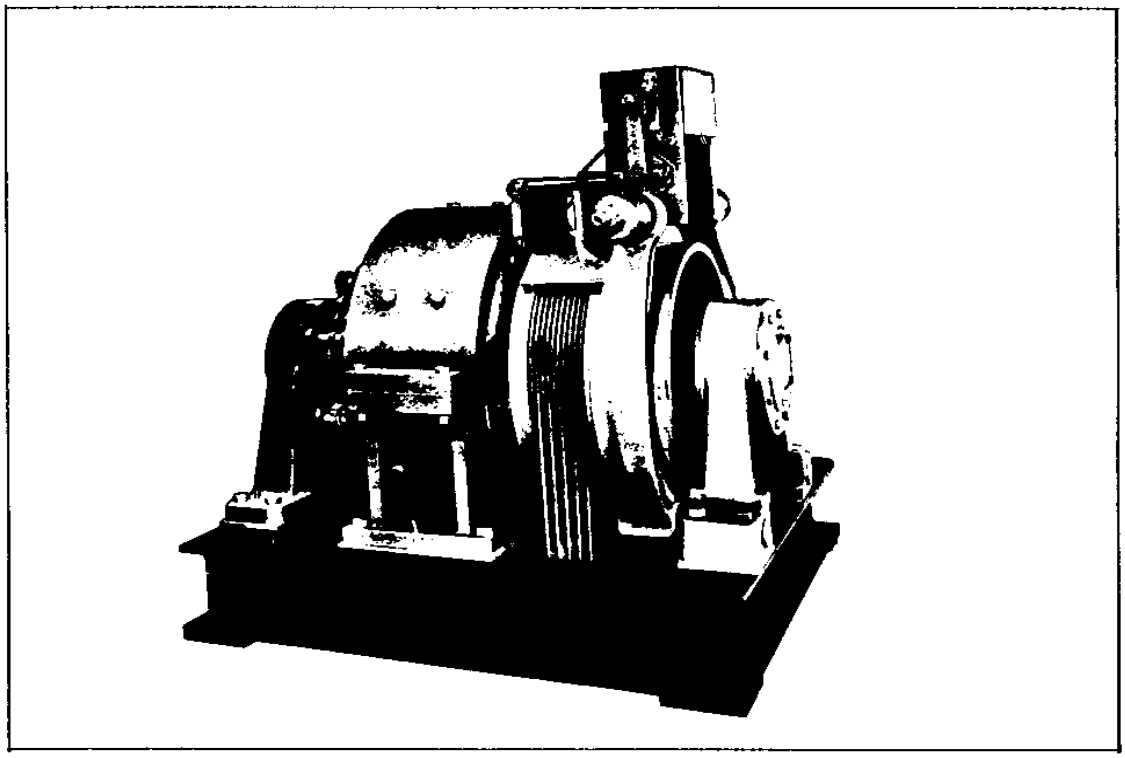

FIGURE 2-12
Gearless Traction Hoist Machine

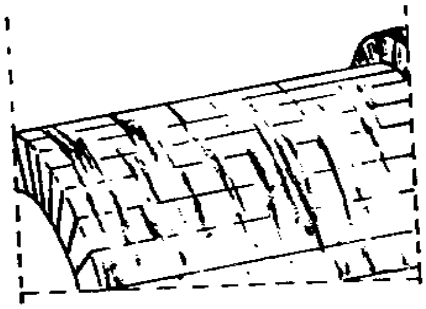

PROBLEM: Streaking

When the surface of a commutator begins to streak, metal is beginning to transfer to the carbon brush

CAUSES

Light electrical load
Light brush pressure
Abrasive or porous brush
Gas contamination
Abrasive dust contamination

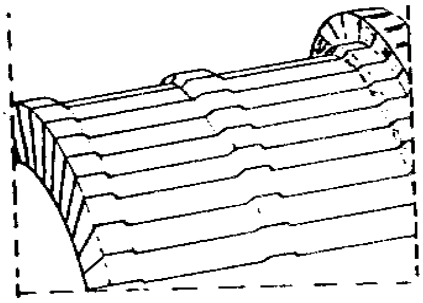

PROBLEM: Grooving

Grooves formed on the commutator surface will only increase in depth.

CAUSES

Abrasive brush
Abrasive dust contamination
Improper brush spacing.

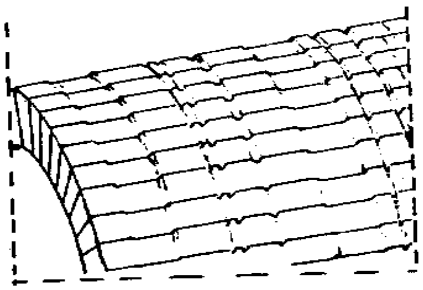

PROBLEM: Threading

When fine lines appear on the commutator surface, there is excessive metal transfer. Rapid brush wear results, and the commutator must be resurfaced.

CAUSES

Gas contamination
Light brush pressure
Light electrical load
Porous brush

FIGURE 2-13a
Typical Commutator Problems

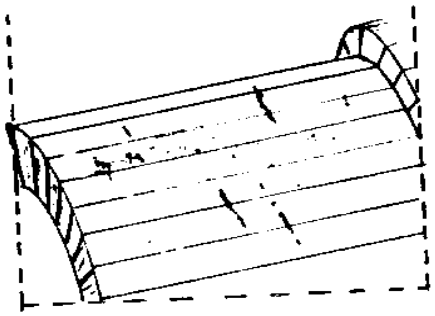

PROBLEM: Pitch-bar Marking
You'll find low or burned spots on the surface of the commutator. The number of these markings equals half or all the number of poles on motor.

CAUSES

Light brush pressure
Abrasive brush
Vibration
Family armature connection
Unbalances shunt field

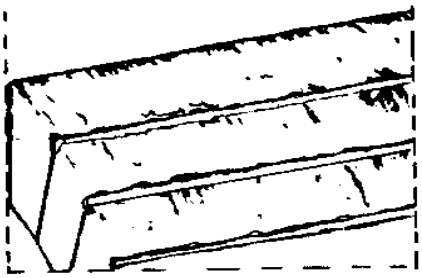

PROBLEM: Copper Drag

Copper drag usually forms at the trailing edge of the bar. It is an abnormal build-up of commutator material that can cause flashover, if not corrected.

CAUSES

Light brush pressure
Abrasive brush
Gas contamination
Vibration

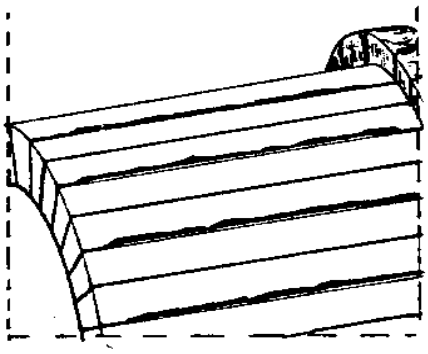

PROBLEM: Heavy Slot-bar Marking

Here, the trailing edge of the commutator bar is etched, rather than built-up. The pattern is related to the number of conductors per slot.

CAUSES

Gas contamination
Electrical overload
Electrical adjustment

FIGURE 2-13b
Typical Commutator Problems

In addition many brakes have electrical contacts which are used in various control functions. These should be checked to assure proper contact operation, insulation on wire and contacts, and condition of connections. Many control systems, by design, stop the elevator electrically when it reaches the floor, then allows the brake to set. This is done to prevent a bump on stopping which is caused when the brake sets. Brake operation should be checked, where applicable, to see that this feature is working properly.

2.5.9 Motor-Generator Set

Just as it was previously indicated that it was . very important to check the hoist machine motor, it is equally important to check the motor generator set. The motor generator set supplies the varying direct current power to the hoist machine motor and is, therefore, directly responsible for the elevator performance. Close checks of the bearings, commutator, brushes, windings, wiring, housekeeping, and mounts should be made.

2.5.10 Operating Speed

The elevator speed should be checked with a tachometer to verify that the elevator is operating at rated speed. An elevator is designed and manufactured to operate at rated speed. An elevator operating below rated speed is not providing full service and should be adjusted. Occasionally, an elevator is found operating over the rated speed. This can result in nuisance shut downs caused by governor trappings and possible safety applications.

2.5.11 Control Equipment

The A17.2 Manual outlines a complete inspection of the control equipment. A good preventive maintenance program on the control equipment will greatly reduce shut downs. Many controllers have pieces of rotating equipment which are in various applications. These should not be overlooked. They should be given the same type of inspection as the larger rotating equipment.

2.5.12 Machine Room

The overall machine room should never be overlooked. The A17.2 Manual lists each area to be checked. It reduces the possibility of accidents and has a direct impact on fire safety. In addition, the following items should be given special consideration.

a. Proper ventilation is required to keep equipment operating. With the newer type of control equipment, proper ventilation is even more critical.

b. Machine room access door hardware is very often found not meeting all requirements of the A17.1 Code. Machine rooms have controlled access, and must be secured by lock and key or combination locks.

c. Machine rooms and machinery spaces are not to be used for storing non-elevator related items. Absolutely no flammable items are permitted.

2.5.13 Machine Room Access

Access to machine rooms and machinery spaces must always be checked. Not only to assure that the usual ladders, stairs, lights, railings, etc. are kept in first class condition, but to be sure that the access is not infringed on by building changes. A prime example: air conditioning is added and the contractor has installed a large duct right through the access right of way requiring the person who enters the machine room to crawl under the duct. Public safety may be directly dependent on rescue personnel getting to the elevator equipment in a hurry. The other consideration is the possible need to move large heavy equipment in and out of the machine room.

2.6 PIT INSPECTION

2.6.1 Scope

DIVISION 105 of A17.2 Manual describes the various inspections that are made in the pit. These should be followed very closely. The beginning of this Division describes various safety precautions that should be followed when making this part of the inspection.

2.6.2 Housekeeping

Trash and dirt in the pit is an extreme hazard. Fire potential becomes a great concern. This not only means dirt on the floor, but it also means dirt and dust on the equipment which can be considered a health hazard. Be sure equipment is kept clean and dry.

2.6.3 Counterweight Runby

Check runby clearance between counterweight and buffer. Rope stretch does occur and re-adjustments have to be made.

2.7 PERIODIC INSPECTION AND TESTS

2.7.1 Scope

Division 110 through 119 of the A17.2 Manual describes various operational tests that are required to be performed. Some tests are required to be performed annually while others are required every five years. It should be specifically documented on the inspector's report that these tests have been performed, plus the dates the tests were made.

2.7.2 Annual Speed Governor Inspection

Division 111 of the A17.2 Manual covers the annual inspection of the governor rope system.

2.7.3 Annual Safety Inspection And Test Of Safeties

Division 112 of the A17.2 Manual covers the annual inspection and test of the car and counterweight safeties. This is a no load slow speed test of the safety equipment. It is done to exercise the equipment to assure its proper operation.

2.7.4 Five-Year Inspection And Test Speed Governors And Safeties

Division 113 of the A17.2 Manual covers the five-year inspection and test of the car and counterweight speed governors and safeties. This is a load-rated speed test of the speed governor and safety equipment. It is (done to exercise the equipment to assure its proper operation.

2.7.5 Annual Test Of Buffers

Division 114 of the A17.2 Manual covers the annual tests of oil buffers. There is no requirement to perform a test on spring buffers.

2.7.6 Five-Year Test Of Buffers

Division 115 of the A17.2 Manual covers the five-year tests of oil buffers. This is a rated-load speed test of the car and counterweight buffers. There is no requirement to perform a test on spring buffers.

2.7.7 Annual Test of Normal And Final Stopping Devices

Division 116 of the A17.2 Manual covers the annual operational test of normal and final terminal stopping devices. The limits only receive a functional test during routine inspections. The annual test requires setting conditions which will require the limits to operate as they would if conditions warranted.

2.7.8 Standby Power

Division 118 of the A17.2 Manual covers the annual full testing of standby (emergency) power operation if this equipment is provided. The certified inspector must make himself familiar with the stand by system provided for each individual elevator and devise a testing procedure accordingly. The A 17.2 Manual describes procedures for testing two of the most common systems.

2.7.9 Door Closing Force

Division 119 of the A17.2 Manual covers the testing of the closing force of the door system. It is a simple test and it is a good practice to do it on each inspection. The codes require it to be done at least annually, but it does not preclude it being done more often. Most elevator accidents occur at the entrance. Therefore, extra effort on the inspection must be concentrated in this area.

2.7.10 Firefighter's Service

2.7.10.1 Instruction Signs. Elevators installed under the requirements of the 1973 edition of the A17.1 Code or later are required to have instructions for operating the elevator under the Firefighters' Service permanently mounted adjacent to or incorporated with the switch at the designated level. Elevators installed after the 1981 edition of A17.1 Code require that instruction be posted at the designated level and in the car. The corridor instruction should describe Phase I Emergency Recall Operation and the car instructions address Phase II Emergency In-car Operation. one should check to see that these are in place and properly displayed.

2.7.10.2 Operational Testing. A full test of firefighters' service is required by Navy Criteria every 60 days. Division 117 of the A17.2 Manual will describe the procedures for conducting the full test.

2.7.10.3 Operational Exercise. It is, however, recommended good practice to operate the system periodically between tests. It has been found that exercising the system keeps it in good operating condition and assures that it will operate at the time of an emergency. The test should include activation of the lobby key switch to assure that all cars affected return under Phase I requirements and that at least one car on Phase II operation is tested, if applicable. This would include operating the Phase II switch in the car and moving it to a landing. Door operation should be checked at this point. This simple test will exercise most of the operating circuits.

2.8 INSPECTION OF WINDING DRUM ELEVATORS

2.8.1 Scope

This section will address the special considerations that are associated with winding drum machine elevators. (See Figures 2-14 and 2-15). The use of winding drum elevators has been restricted to freight elevator applications with a rated speed of 50 feet per minute or less, (a rise of not more than 40 feet), and shall not have counterweight. However, there are drum machine elevators that were installed prior to this application requirement.

2.8.2 Wire Rope Inspection

Item 103.3(g) of A17.2 Manual states that wire ropes have to be refastened every 12 months for drum machines located over the hoistway and every 24 months for basement machine applications. The intervals for refastening on winding drum driving machines with 1:1 roping are based on fatigue developing in the section of rope adjacent to the babbitted rope socket due to the bending encountered by the wires as a result of vibration being dampened at this location or due to stress of a torsional nature that occurs at this point as a result of changes in tension on the ropes. This problem is more apt to be encountered where a rope socket is employed, but can also develop with attachments of any type. If the hoisting ropes are not refastened at the interval specified by this rule, a dangerous situation could occur. On winding drum driving machines with 2:1 roping there is no requirement to refasten the hoisting ropes periodically as there is no fatigue developed in the rope section adjacent to the babbitted rope socket. Also, at least one turn of rope must remain on the drum when the car is resting on a fully compressed buffer. The broken wires per strand requirement is also modified. See item 103.4(b) of A17.2 Manual for details.

2.8.3 Normal And Final Stopping Devices

On winding drum machines, normal and final terminal stopping devices are found on the hoist machine. The code does allow normal limits to be located in the hoistway, but most will be found on the machine. The machine devices are either sized to interrupt power lines feeding the hoist motor or of a pilot contact design that will open the motor control switch circuit. The use of the pilot contact approach is only allowed where the drive machine brake is a direct circuit controlled device. Items 103.7, 103.8, and 104.10 of A17.2 Manual provide specific information about these devices.

2.8.4 Winding Drum Machine

Special attention must be given to the drum on this type of machine where drum failures have occurred. (See Figure 2-16). Be sure to examine the rope fastening in the drum; especially check the rope clamping to see that clamps are properly installed. (See Figure 2-17 and Table 2-3). The hammer test of the drum is also very important to determine if there are cracks in the casting. Be advised, welding is not allowed. Rule 1200.,3 of the A17.1 Code prohibits welding of any part on which the support of the elevator depends. Closely examine the attachment of the drum to the drive shaft. Be sure that all fastenings are in their intended place and secured in accordance with manufacturer's recommendations. Item 104.9 of the A17.2 Manual provides specific information regarding machine inspection.

2.8.5 Slack Rope Device

Winding drum machines are required to have a slack rope device. There are basically two types of these devices, one of which is found in the hoistway at the dead end hitch of elevators roped 2:1. The second type is found at the hoist machine. There are many variations of this type of switch, depending on the machine design and the particular manufacturer. The switch is provided to detect slack in the ropes and cause the machine to stop when this occurs. A prime cause of slack rope is the car hanging up in the hoistway while being lowered. Items 104.10(a) and 112.4 of the A17.2 Manual describe the procedures for testing the device.

2.9 INSPECTION OF SCREW COLUMN ELEVATORS

2.9.1 Scope

The screw column elevator is an uncounterweighted car which is supported by a screw column and is raised and lowered by screw thread means. Figures 2-18 and 2-19 show typical screw column elevator applications with component names that will be used in this section. The location of certain major components of a screw column elevator varies, depending on the design of that particular elevator. This section will address many of the various arrangements.

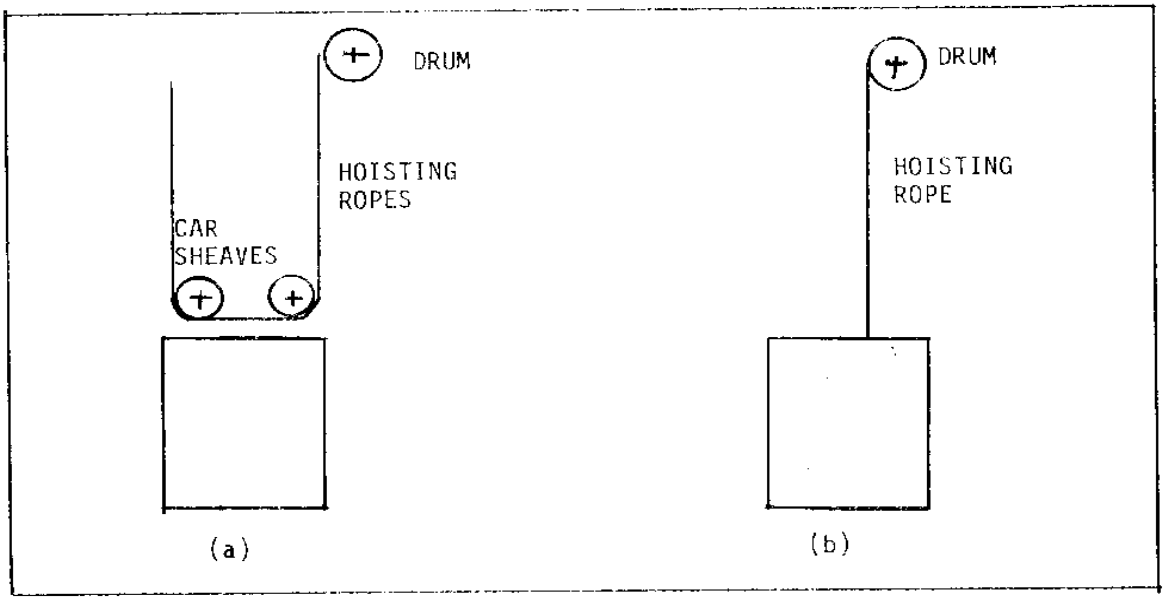

FIGURE 2-14
(a) Roping Arrangement for 2:1 Overhead Drum Machine
(b) Roping Arrangement for 1:1 Overhead Drum Machine

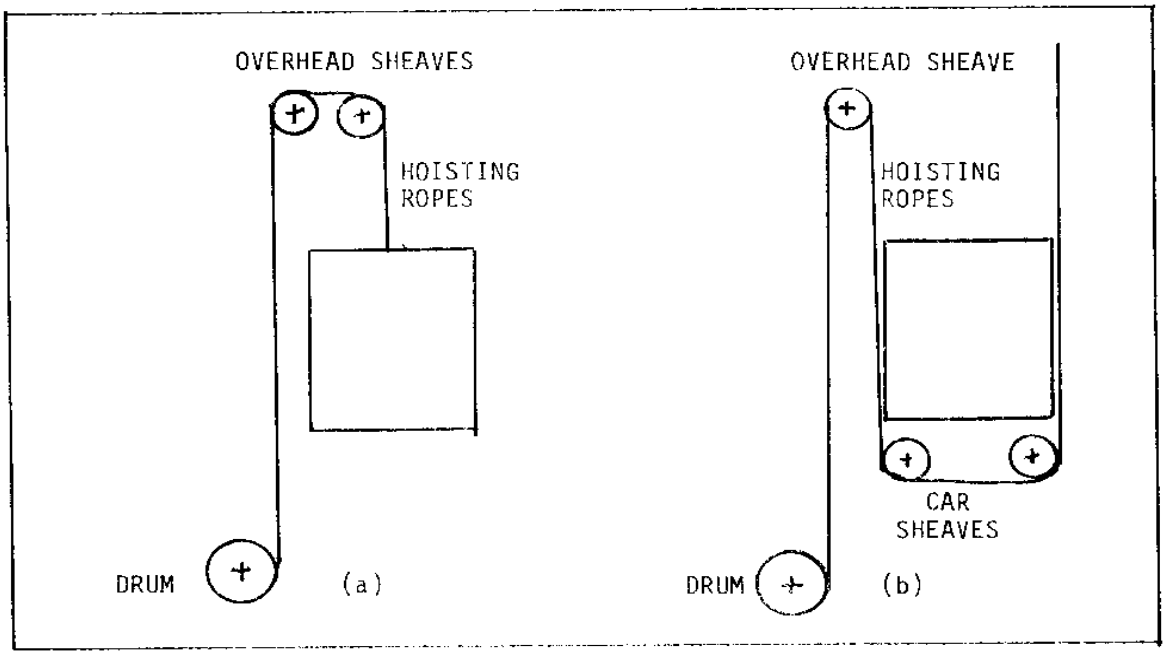

FIGURE 2-15
(a) Roping Arrangement for 1:1 Basement Drum Machine
(b) Roping Arrangement for 2:1 Basement Drum Machine

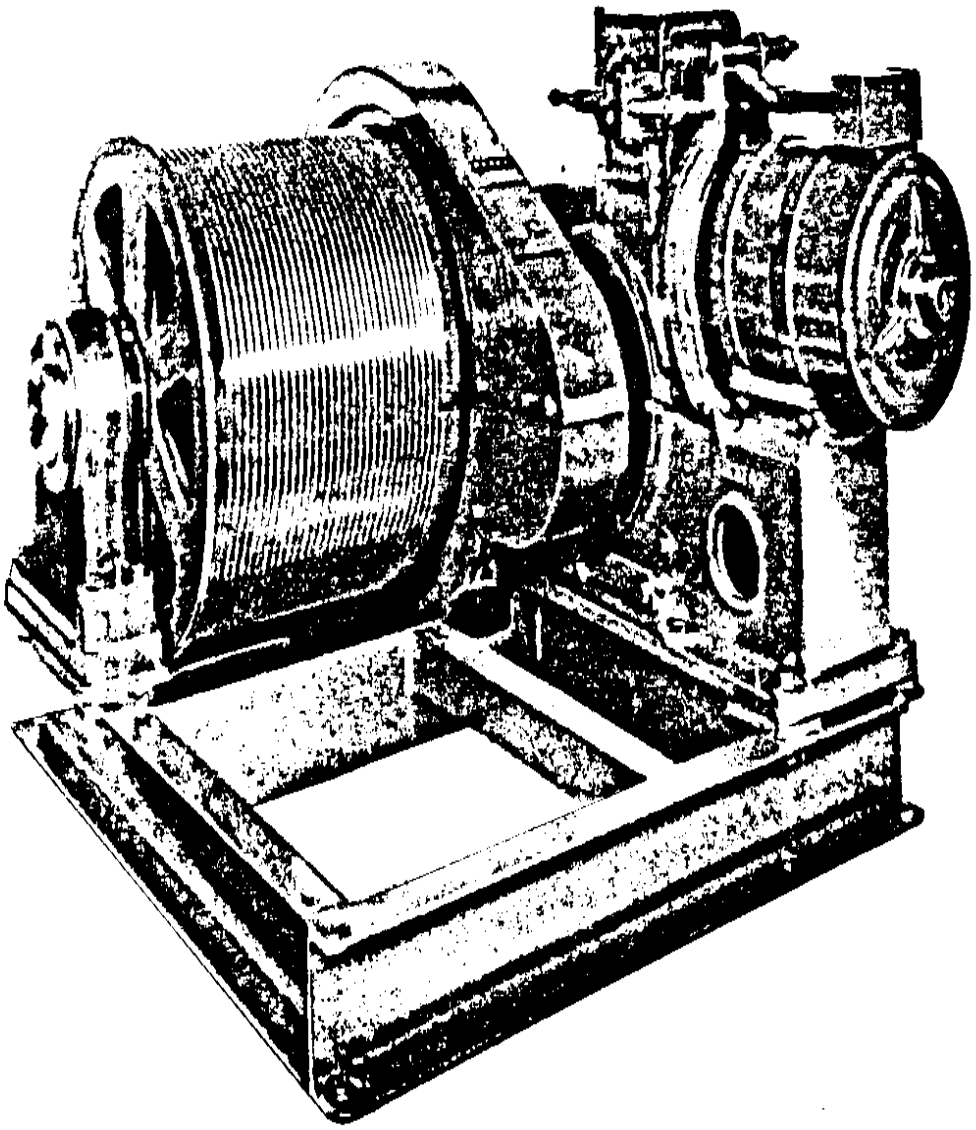

FIGURE 2-16
Typical Winding Drum Machine

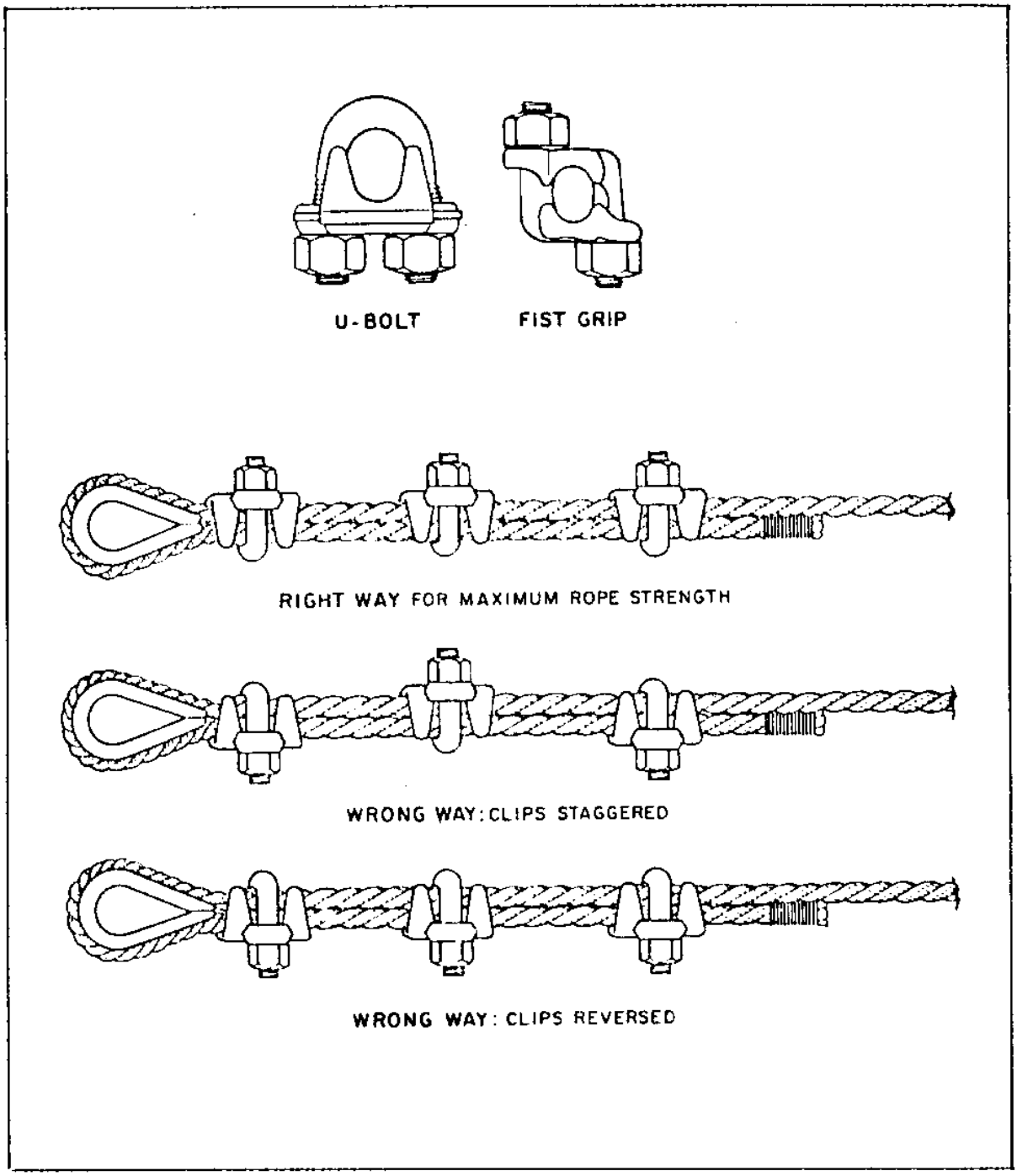

FIGURE 2-17
Rope Fastenings

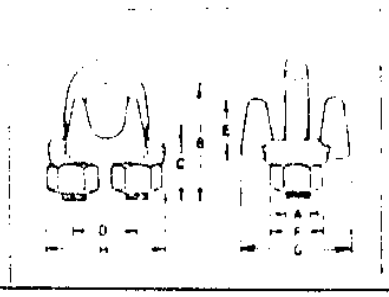

Clip Size	A	B	C	D	E	F	G	H	Min. no. of clips	Amount of rope to turn back	Torque in lb/ft	Weight lb/100
3/8	.44	1.50	.75	1.00	.91	.75	1.63	1.94	2	6½	45	42
7/16	.60	1.88	1.00	1.19	1.03	.88	1.81	2.28	2	7	65	70
½	.50	1.88	1.00	1.19	1.13	.88	1.91	2.28	3	11½	65	75
9/16	.56	2.25	1.25	1.31	1.22	.94	2.06	2.50	3	12	95	100
5/8	.56	2.38	1.25	1.31	1.34	.94	2.06	2.50	3	12	95	100
3/4	.63	2.75	1.44	1.50	1.41	1.06	2.25	2.84	4	18	130	150
7/8	.75	3.13	1.63	1.75	1.59	1.25	2.44	3.16	4	19	225	240
1	.75	3.50	1.81	1.88	1.78	1.25	2.63	3.47	5	26	225	250

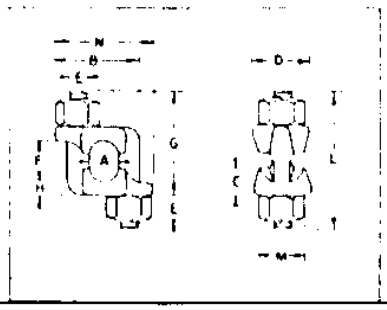

Clip Size	A	B	C	D	E	F	G	H	L Approx.	M	N	Min. no. of clips	Amount of rope to turn back	Torque in lb/ft	Weight lb/100
½	.50	1.88	.56	1.25	.50	1.00	2.19	.28	2.75	.88	2.19	3	11	65	60
9/16	.63	2.28	.69	1.50	.63	1.25	2.69	.28	3.50	1.06	2.63	3	12¾	130	110
5/8	.63	2.28	.69	1.50	.63	1.25	2.69	.28	3.50	1.06	2.63	3	13½	130	110
3/4	.75	2.69	.88	1.81	.75	1.50	2.94	.31	3.75	1.25	3.06	3	16	225	140
7/8	.88	2.97	.97	2.13	.75	1.75	3.31	.38	4.13	1.25	3.14	4	26	225	220
1	1.00	3.06	1.19	2.25	.75	2.00	3.72	.41	4.63	1.25	3.53	5	37	225	270

TABLE 2-3
Rope Fastenings

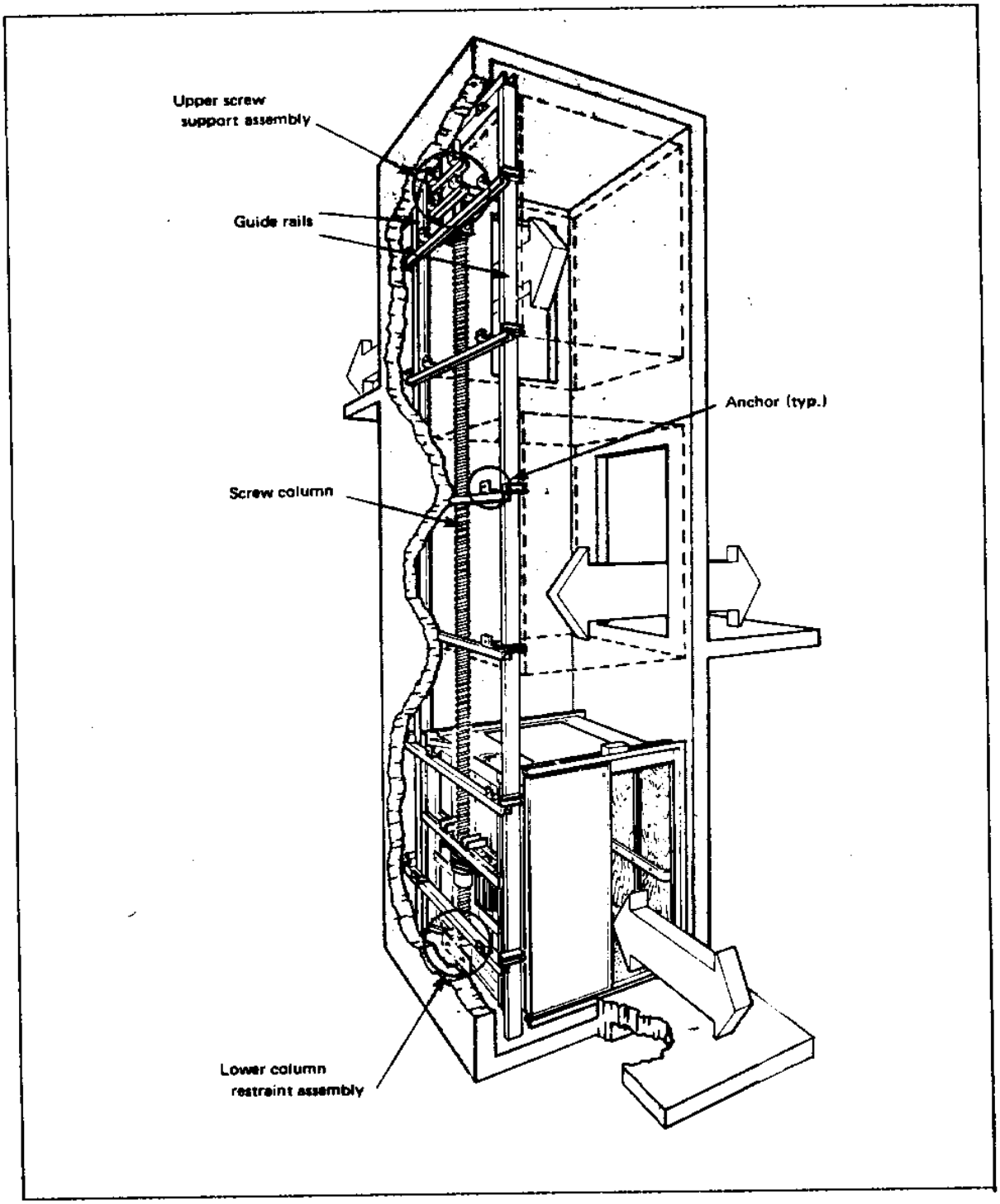

Figure 2-18
Screw Column Elevator Schematic Showing
Various Door Opening Options

2.9.2 In-Car Inspection

2.9.2.1 Drive. If the screw machine is mounted on the car and accessible for inspection and maintenance from an access panel in the side or rear car wall, check the access panel to verify that it is normally kept closed and locked and that the key is available only to inspectors, maintenance personnel and repair personnel. Insure that the machine cannot be operated when the access panel is open. If the screw machine is equipped with a safety nut below the drive nut, carefully measure the space (distance) between the drive nut and the safety nut. Compare this space with the space when the drive nut and safety nut were originally installed by referring to the Safety Nut Spacing Data Tag attached to the screw machine. A reduction in this space is an indication of wear of the drive nut. Any reduction of the separation space of more than one thirty-second (1/32) inch should be reported. Examine any belts or chains in the screw machine drive for proper tension, wear and damage; including cuts, breaks, or separation. Check tension devices, if provided, to verify that they are in proper adjustment to detect slack or broken belts or chains. Check all machine fastening bolts to determine that none have become loose or are missing. Visually inspect the electrical service connection to the motor to verify there is not evidence of chafing, damage, or looseness. Inspect the screw column to verify that it is lubricated in accordance with manufacturer's recommendations. After temporarily making the contact on the access panel inoperative so that the screw machine can be operated with the access panel open, operate the elevator car in each direction while observing the brake functions and the rotation of the machine. Promptly upon interruption of power to the drive machine, stop the car.

2.9.2.2 Control Equipment. If the controller is located on the car and accessible for inspection and maintenance from an access panel in the side or rear car wall, proceed with the inspection as described previously in this chapter.

2.9.2.3 Hoistway Equipment. If the particular design and installation permits the inspection of all mechanical and electrical equipment from within the car, the contact for the access panel should be made inoperative temporarily so that the car can be moved with the access panel open. Start with the car at the top of the hoistway and move the car in the down direction in about two (2) foot increments, stopping to inspect all hoistway equipment at each location. Included in the mechanical and electrical equipment which should be inspected are: guide rails, guide rail fastenings; screw column supports, mounting brackets and guides, traveling cable, etc.

The inspection should verify that all hoistway equipment is undamaged and functional and that all fastenings are tight. If the screw column is in tension, verify that the support fastenings at or near the top of the hoistway are tight and there is no evidence of damage or distortion. If the screw column is in compression, verify that the support means at or near the bottom of the hoistway are intact and there is not evidence of damage or distortion. Check screw column guides or stabilizing supports to verify that they are intact and functional. If the screw column is made up of more than one section, special attention should be given to the joints to verify that there is no indication of shifting or separation of the sections. Utilize procedure previously described in this chapter for inspection of items common to screw column and traction elevators. observe extreme care when moving the car with the access panel open. Be sure the contact on the access panel is restored for normal operation and that the access panel is properly closed and locked before leaving the car.

2.9.3 Outside Of Hoistway Inspection

2.9.3.1 Control Equipment. Control equipment may be located separate from the elevator. If this arrangement is used, then the equipment must be enclosed in a locked metal cabinet with access restricted. Inspection procedures should be as previously described in this chapter.

2.9.3.2 Manual Movement of a Stalled Car. If the elevator is equipped with a device to permit a qualified person, from a position outside the elevator car, to manually move the car to a landing, check the operation as follows:

a. Have the power-supply-line disconnecting means opened while the car is between landings to simulate an unplanned power outage.

b. Operate the device manually and move the car to an adjacent landing.

c. Restore the device and the power-supply-line disconnecting means for manual operation.

2.9.4 Top Of Car Inspection

2.9.4.1 Drive. If the screw machine is located on, or accessible from, the top of the car, proceed with the inspection in accordance with the procedures previously described in this section.

2.9.4.2 Control Equipment. Control equipment may be located on the car top. Proceed with the inspection as previously described in this section.

2.9.4.3 Speed Governor, Governor Rope and Governor Rope Releasing Carrier. If the elevator is equipped with a speed governor which is most accessible from the top of the car, inspect the governor in accordance with the applicable portions of Item 104.6 of the A17.2 Manual. Inspect the governor rope releasing carrier, if the elevator is so equipped, in accordance with the applicable portions of Item 103.15 and the governor rope in accordance with the applicable portions of 103.4.

2.9.5 Inspection Of Machine Rooms And Machinery Space.

In some applications, the drive system, control equipment and/or speed governor are located in a specific machine room or machinery space. Inspection procedures for such an arrangement shall follow the steps previously described in Section 2.5 "OVERHEAD MACHINERY SPACE AND MACHINE ROOM INSPECTION" and, for general requirements relating to this type of arrangement, as previously described for traction elevator.

2.9.6 Periodic Inspections And Tests

The following inspections and tests should be made on a periodic basis.

2.9.6.1 Annual Inspections and Tests.

2.9.6.1.1 Terminal Stopping Devices. See Division 116 of the A17.2 Manual for inspection and test of normal terminal stopping devices. Note that final terminal stopping devices are not required on screw column elevators having a rated speed of less than 100 fpm. Mechanical steps are allowed. Where final terminal stopping devices are provided, test by adjusting the device with the car operating at leveling speed.

2.9.6.1.2 Governor and Safety Test. Where governors and safeties are provided on screw column elevators, they should be tested as outlined in Divisions 111 and 112 of A17.2.

2.9.6.1.3 Buffer Test. Where oil buffers are provided on screw column elevators, they should be tested as outlined in Division 114 of A17.2. There is no requirement to perform a test of spring buffers.

2.9.6.1.4 Test of Firefighter's Service. Where the Firefighter's Service is provided on screw column elevators, they should be tested as previously outlined for traction elevators in this chapter. On Section 2.10 - "FIREFIGHTER'S SERVICE".

2.9.6.1.5 Test of Emergency Power Operation. Where emergency power is provided for screw column elevators, it should be tested as outlined in applicable portions of Division 117 of A17.2.

2.9.6.1.6 Test of Closing Force of Door System. Where screw column elevators are provided with power operated doors, the closing force of the door system should be tested as outlined in applicable portions of Division 119 of A17.2.

2.9.6.2 Tests Performed Each Five Years.

2.9.6.2.1 Oil Buffers. Where oil buffers are provided on screw column elevators, they should be tested as outlined in applicable portions of Division 115 of A17.2. There is no requirement to perform a test of spring buffers.

2.9.6.2.2 Governor and Safety Test. Where governors and safeties are provided on screw column elevators, they should be tested as outlined by applicable portions of Division 113 of A17.2.

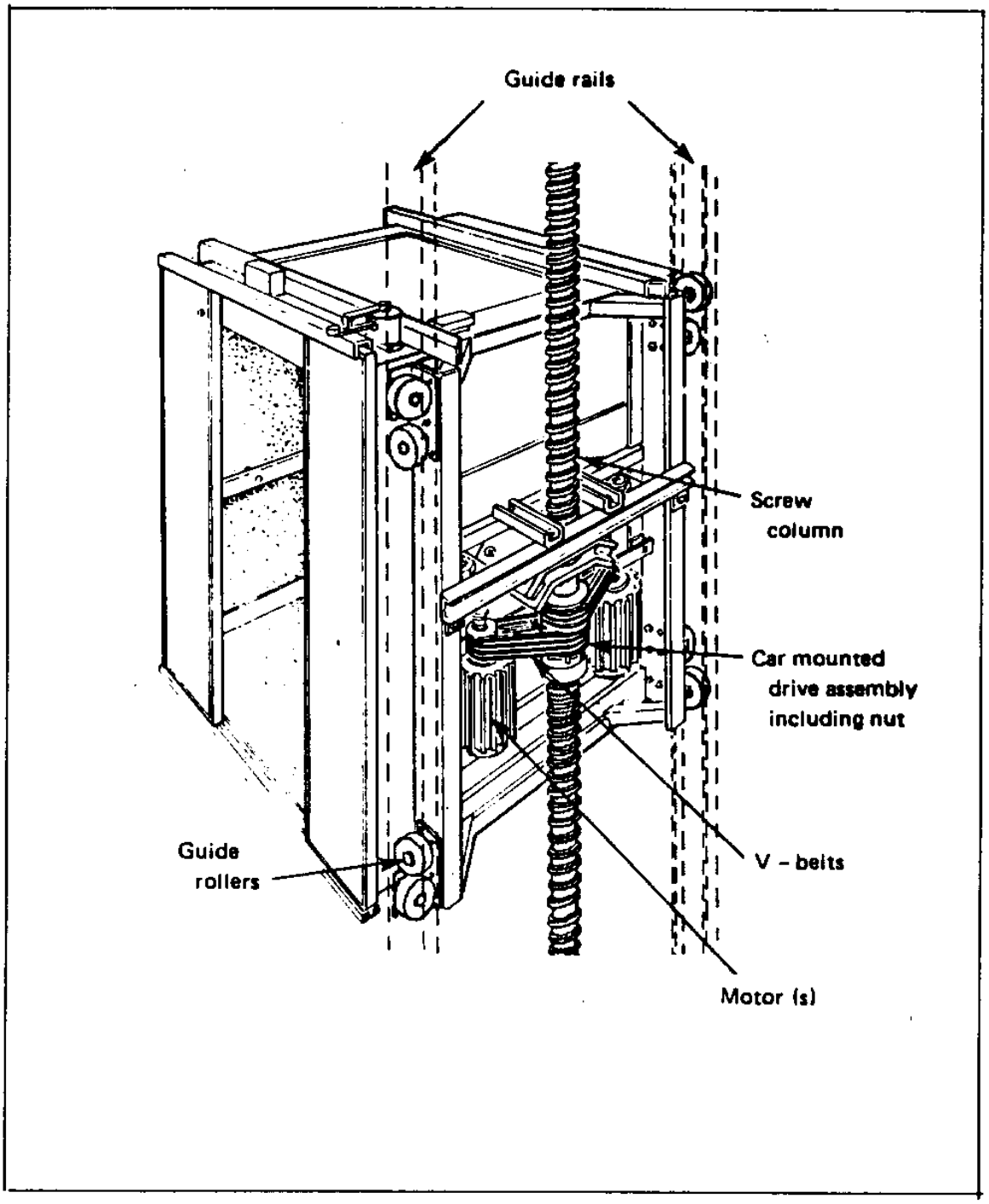

Figure 2-19
Detail Of Car Mounted Drive Assembly
Nut and Screw Column

CHECKLIST FOR INSPECTION AND TEST OF ELECTRIC ELEVATORS

This checklist is to serve only as a guide. For complete requirements and test procedures refer to ANSI/ASME A17.1 and ANSI/ASME A17.2.

Address _____

_____

Identification No. _____

Inspection date _____

Installation date _____

Alteration date _____

Rated load _____

Rated speed _____

Classification _____

Type of operation _____

Type of inspection and test:

☐ Routine

☐ Periodic (including routine)

☐ Acceptance (including routine and periodic)

Additional information _____

CHECK	A17.1 RULE	A17.2 ITEM Routine	Periodic	Acceptance	CONDITION
INSIDE THE CAR					
1.1 Emergency stop switch	210.2(e)	101.3e	101.3e	101.3e	
1.2 Car emergency signal	211.1	101.6	101.6	121.6, 121.3	
1.3 Rated load, platform area Capacity and data plate	207.1 207.3	101.1	101.1	121.1	
1.4 Signs in freight elevator	207.5	101.1	101.1	121.1	
1.5 Car enclosure	204.1 204.2 204.3	101.1	101.1	121.2	
1.6 Ventilation of passenger elevators	204.2c	101.1	101.1	121.2	
1.7 Side emergency exits	204.2d	101.1	101.1	121.2	
1.8 Car door or gate	204.4 204.5 204.6	100.6	100.6	121.5	
1.9 Car door or gate electric contacts	111.2	100.3 100.4	100.3 100.4	121.5	
1.10 Closed position of car door or gate	111.7c 111.12	100.4b 100.2	100.4b 100.2	100.4b 100.2	
1.11 Power opening of doors or gates	112.2	100.5 App. F	100.9	121.5 App. F	
1.12 Power closing of doors or gates	112.3 112.4	100.9	100.9	121.5	
1.13 Door reopening device	112.5	100.9	100.5	121.5	
1.14 Car floor and landing sill	203	101.4	101.4	101.4	

PART 1 OF 5

CHECKLIST FOR INSPECTION AND TEST OF ELECTRIC ELEVATORS

Address _____ ID No. _____ Date _____

CHECK	A17.1 RULE	A17.2 ITEM Routine	Periodic	Acceptance	CONDITION
INSIDE THE CAR (continued)					
1.15 Operating control device	210.1	101.3 100.6	101.3 100.6	101.3	
1.16 Emergency signal device	211	101.6	101.6	101.6	
1.17 Car lighting (including emergency)	204.7	101.2a 101.2b	101.2a 101.2b	121.3 121.6	
OUTSIDE HOISTWAY					
2.1 Car platform guard	205.6	102.5	102.5	102.5	
2.2 Power closing of hoistway doors	112.3	100.5	100.5	100.5	
2.3 Door closing force	112.3e	-	119	121.5	
2.4 Sequence operation	112.6	100.5d	100.5d	100.5d	
2.5 Hoistway enclosure	100.1	102.1 103.21	102.1 103.21	123.6 103.21	
2.6 Hoistway doors	110.2	100.1	100.1	123.7	
2.7 Vision panels	110.7	103.13	103.13	123.7	
2.8 Hoistway door locking device	111.1	100.2a	100.2a	100.2a	
2.9 Elevator leveling device	111.6	102.3	102.3	123.7	
2.10 Access to hoistway	111.9	102.2 102.3b	102.2 102.3b	122.3	
2.11 Emergency door	110.1	100.7	100.7	100.7	
TOP OF CAR					
3.1 Top car clearance and refuge space	107.1b 107.1b	103.1	103.1	123.10	
3.2 Stop switch top of car	[illegible]	103	103	103	
3.3 Top car operating device	210.4	103.14	103.14	123.2	
3.4 Car top light and [illegible]	204.7a	103.14	103.14	123.1	
3.5 Traveling cables and junction	102.1b	103.18	103.18	103.18	
3.6 Door gate contacts, contacts Hangers and connections	110	103.12 103.13	103.12 103.13	103.12 103.13	
3.7 Governor rope inspection	206.5	103.4	111.11	111.11	
3.8 Governor release carrier	209.15	103.15	103.15	103.15	
3.9 Hoistway clearances	106	103.20 App. A	103.20	123.4 App. A	
3.10 Normal terminal stopping device	209.2	103.7	116.1	124.6	
3.11 Final terminal stopping device	209.3	103.8	116.7	124.8	
3.12 Top emergency exit	204.1a	101.1	101.1	121.2	
3.13 Counterweight	202	103.2	103.2	103.2	

PART 2 OF 5

SAMPLE

FIGURE 2-20a
Sample Checklist For Inspection And Test of Electric Elevators

CHECKLIST FOR INSPECTION AND TEST OF ELECTRIC ELEVATORS

Address _____ ID No _____ Date _____

CHECK	A17.1 RULE	A17.2 ITEM Routine	Periodic	Acceptance	CONDITION
TOP OF CAR (continued)					
3.14 Counterweight safeties	206.4	106.14	106.14	106.14	
3.15 Crosshead data plate	207.3 212.2e	103.3	103.3	123.6	
3.16 Multiple hoistway	100.1d	-	-	123.5	
3.17 Construction of hoistway	100	103.20	103.20	123.8	
3.18 Floor over hoistway	100.3	104.4	104.4	104.4	
3.19 Hoistway smoke control	100.4	103.26	103.26	123.8	
3.20 Guide rails, fastenings, and alignment	200	103.10 103.11	103.10 103.11	103.10 103.11	
3.21 Electrical wiring, pipes and ducts	102	103.23	103.23	103.23	
3.22 Floor numbers	211.4	103.22	103.22	103.22	
3.23 Landing sill guards, projections, and recesses	110.10 100	101.8 103.20	101.8 103.20	101.8 103.20	
3.24 Wire rope fastening and hitch plate	212	103.3 App. D	103.3	103.3 App. D	
3.25 Hoist rope inspection	212.3e	103.4 App. B	103.4	103.4 App. B	
3.26 Broken tape switch	208.2d(2) 210.2f				
3.27 Compensating rope or chain inspection	202.4	103.8	103.8	103.8	
3.28 Overhead and deflection sheaves	208.3.3	103.18	103.18	103.18	
3.29 Car frame and sills	203	103.16	103.16	103.16	
3.30 Car leveling devices		103.17, App. F	103.17	103.17 App. F	
MACHINE ROOM AND MACHINERY SPACE					
4.1 Governor tripping speed	206.2	-	113.3b	113.3b	
4.2 Governor overspeed switch and seal	206.4b 206.3	104.8 App. C	113.3h	113.3h App. C	
4.3 Wire rope fastenings	212.9	104.1	104.1	104.1	
4.4 Enclosure of machine space	101.1	-	-	124.6	
4.5 Access to machine space	101.3	104.16	104.16	124.6	
4.6 Secondary and deflection sheaves	208.2 208.3	104.2	104.2	104.2	
4.7 Head room in machinery space	101.4	-	-	124.6	
4.8 Lighting machine space	101.5a	104.18	104.18	104.18	
4.9 Ventilation of machine and control space	101.5b	104.18	104.18	104.18	

PART 3 OF 5

CHECKLIST FOR INSPECTION AND TEST OF ELECTRIC ELEVATORS

Address _____ ID No _____ Date _____

CHECK	A17.1 RULE	A17.2 ITEM Routine	Periodic	Acceptance	CONDITION
MACHINE ROOM AND MACHINERY SPACE (continued)					
4.10 Guards for exposed equipment	104.1	104.8	104.8	124.6	
4.11 Visual check of gears and bearings	208	104.11	104.11	124.8	
4.12 Terminal stopping device	209	104.10	116	124.5	
4.13 Numbering of machines and disconnect switches	208.10 210.5	-	-	124.6 124.7	
4.14 Physical ground, electrical equipment	210.4	-	-	124.7	
4.15 Maintna disconnect	210.5	-	-	124.7	
4.16 Overhead beam and fastenings	105	104.3	104.3	104.3	
4.17 Top counterweight clearance	107.1	104.6	104.6	104.6	
4.18 Traction sheave	208.2 208.3	104.7	104.7	104.7	
4.19 Drive motor	-	104.12	104.12	104.12	
4.20 Drive machine brake	210.5	104.13	104.13	104.13	
4.21 Motor generator	-	104.14	104.14	104.14	
4.22 Controller wiring fuses, etc	-	104.15	104.15	104.15	
4.23 Hoistway wiring and ducts	102	104.19	104.19	104.19	
PIT					
5.1 Pit light and stop switch	108.1a 108.1f	106.1	106.1	123.3 123.4	
5.2 Pit ladder	108.1d	106	105	125.8	
5.3 Buffer clearance and runby car and counterweight	107.1	105.11	105.11	125.1	
5.4 Construction of oil buffer	201.4	105.2	105.2	125.2	
5.5 Oil buffer plunger	201.4e	-	114.3(b) 115.2	115.2	
5.6 Oil buffer oil level gage	201.4f	105.2	114.2g 115.2	105.2	
5.7 Oil buffer data plate	201.4k	105.2	105.2	105.2	
5.8 Spring buffer and data plate	201.3c	105.3	105.3	105.3	
5.9 Solid bumper	201.2	105.4	105.4	105.4	
5.10 Buffer switch (type C safety)	205.8b(7)	105.14	105.14	105.14	
5.11 Car safety	205.1 205.5	105.14 App. C	113.4	113.4 App. C	
5.12 Governor rope tension sheave	206.7	105.6	105.6	105.6	

PART 4 OF 5

SAMPLE

FIGURE 2-20b
Sample Checklist For Inspection And Test of Electric Elevators

CHECKLIST FOR INSPECTION AND TEST OF ELECTRIC ELEVATORS

Address _____ ID No _____ Date _____

CHECK	A17.1 RULE	A17.2 ITEM Routine	Periodic	Acceptance	CONDITION
PIT (continued)					
5.13 Safety parts, marking plate, and bottom guide shoe	205.14	105.14	105.14	105.14	
5.14 Counterweight guard	103.2	105.5	105.5	105.5	
5.15 Protection of space below hoistway	119.1	105	105	105	
5.16 Normal stopping device	209.2	103.7	103.7	103.7	
5.17 Final stopping device	209.3	105.10	116.2	124.5	
5.18 Guard between pits	106.1c	105	105	125.8	
5.19 Pit access	106.1d	105	105	125.8	
5.20 Illumination	106.1e	105.1	105.1	125.4	
5.21 Traveling cable	210.4	105.12	105.12	105.12	
5.22 Car frame and platform	203	105.13	105.13	105.13	
5.23 Compensation sheave chains ropes and locking devices	210.5	105.7 105.8	105.7 105.8	125.5 105.8	
5.24 Pit construction	106.1b	105.1	105.1	105.1	
TEST					
6.1 Governor (a) Annual (b) 5 year (c) Acceptance	1002.2c 1002.3e 1003.2b	104.6 - -	111.1 113.3 -	- - 124.2	
6.2 Safeties (a) Annual (b) 5 year (c) Acceptance	1002.2b 1002.3 1003.2	104.6 - -	112 113 -	- - 124.4	
6.3 Oil buffer (a) Annual (b) 5 year (c) Acceptance	1002.2a 1002.3c 1003.2e	105.2 - -	114.2 115 -	- - 125.2	
6.4 Terminal stopping devices	1002.2e	103.7	116	116	
6.5 Firefighters' service	1002.2f	103.7	116	116	
6.6 Emergency power operation	1002.2g	104.16	118	118	
6.7 Power door closing force	1002.2h	-	119	119	
6.8 Winding drum machine, slack rope device	1002.2d	-	112.4	112.4	

Performed by _____ Inspector _____

PART 5 OF 8

FIGURE 2-20c
Sample Checklist For Inspection And Test Of Electric Elevators

NAME/STREET CITY STATE ZIP DATE TEL

OUR CONTRACT# OCCUPANT OWNER/AGENT

CAR # CITY/STATE # MFGR # MFGR CAPACITY LBS SPEED FPM

PASSENGER ☐ SERVICE ☐ FREIGHT (if Freight) C1 ☐ C2 ☐ C3 ☐ GEARED ☐ GEARLESS ☐ HYDRAULIC ☐

MACHINE
Make
Type
Serial
Location
Roping - 1:1 ☐ 2:1 ☐

GEARED
Glandpacking
Mfgr
P/N
Thrust Bearing
Mfgr
P/N
Casehead Bearing
Mfgr
P/N

GEARLESS
Sheave Bearing
Mfgr
P/N
Cone Bearing
Mfgr
P/N

HOISTING PUMP MOTOR
Make
Serial
Type
RPM
P/N
Amps
Volts
Phase
Hertz

BRUSHES
Quantity
Mfgr
P/N
Grade#

BEARING
Front Mfgr
P/N
Rear Mfgr
P/N

BRAKE
Type
Coil P/N
Quantity Lining Pieces
Size X X
Material
Quantity of Rivets
Size X

SELECTOR
Yes ☐
No ☐
Mfgr
Type

CONTROLLER
Make
Serial
Type
W/D #
Volts
Our W/D #

GENERATOR MOTOR
Make
Serial
Type
H.P.
RPM
Amps
Volts
Phase
Hertz

GENERATOR
Make
Serial
Type
RPM
Amps
Volts
KW

BRUSHES
Quantity
Mfgr
P/N
Grade#

BEARING
Front Mfgr
P/N
Rear Mfgr
P/N

EXCITER
Make
Serial
Type
RPM
Amps
Volts
KW

BRUSHES
Quantity
Mfgr
P/N
Grade#

BEARING
Front Mfgr
P/N
Rear Mfgr
P/N

HYDRAULIC RAM
Mfgr
HYDRAULIC RAM PACKING
Quantity Pieces
Diameter
Mfgr
P/N

DOOR OPERATOR
Mfgr
Type
Door Motor Mfgr
Type HP
AC ☐ DC ☐ RPM
Amps Volts
1 SPS.O. ☐ 2 SPS.O. ☐ C.O. ☐
Width Opening Inches
Door Close Time Seconds
Door Speed 1' of Past Speed
lbs. of Thrust (close)
Nudging Seconds
Door Open Time Seconds

CAR DOOR HANGER ROLLER
Mfgr
P/N

CAR DOOR GIB
Quantity/Door
Mfgr
P/N

HATCH DOOR HANGER ROLLER
Mfgr
P/N

HATCH DOOR GIB
Quantity/Door
Mfgr
P/N

CAR SAFETY
Governor Mfgr
Type
Tripping Speed FPM
Potential FPM
Field FPM
Safety Mfgr
Type

C.W.T. SAFETY
Governor Mfgr
Type
Tripping Speed FPM
Potential FPM
Safety Mfgr
Type

CAR, CWT GUIDES
Car-Roller ☐ Slide ☐
Mfgr
Wheel P/N
Gib P/N
CWT Roller ☐ Slide ☐
Mfgr
Wheel P/N
Gib P/N

CABLES/CHAINS

	Qyt	Length	Dia.	Const.	Mat'l	Mfgr
Hoist						
Drum Cwt.						
Car Cwt.						
Governor						
Compensation						
Selector Tape						
Selector Cables						
Compensating Cables/Chains						

TRAVELING CABLES

Cable #	Type	No. Cond.	Wire Size	Length	Mfgr
1					
2					
3					
4					
5					
6					
7					
8					

FIGURE 2-21
Sample Elevator Equipment Profile Form

CHAPTER 3

HYDRAULIC ELEVATORS

3.1 INTRODUCTION

NOTE: Paragraphs identified with a vertical line in the left margin are inspections that should be made by certified Vertical Transportation Equipment Inspectors only.

3.1.1 Scope

The inspection procedure for hydraulic elevators included in this chapter is not only an inspection of all safety related functions, but is also an inspection to determine the condition of the equipment and identify areas that need improvement. Proper maintenance is needed to keep the elevator operating. When preventive maintenance is lacking, shut downs will occur. Part II of the ANSI/ASME A17.2 Inspector's Manual for Elevators and Escalators addresses the safety aspect of the inspection of hydraulic elevators. In this chapter we will identify the specific Division of Part II which relates directly to the inspection procedure being followed in this text. It is intended that each noted division should be reviewed as it is identified and suggested procedures followed. The maintenance and performance considerations of the inspection will be addressed in the following test. See Figures 3-1 and 3-2, which show various elevator arrangements with component names that will be used in this chapter.

3.1.2 Performance Criteria

As was stated, the purpose of procedures as outlined in Section 2.1.2 are applicable.

3.1.2.1 Elevator Speed (Hydraulic Elevators). Elevator operating speed is measured with a tachometer while the elevator makes a full run through the hoistway with no load in the car. With hydraulic elevators, it is necessary to make this reading from the top of the car by holding the tachometer on the guide rail. The up direction operating speed should be maintained at a level of plus or minus 5% of the rated speed (to be found on the cross head of the car) under any load condition. The down speed is much more difficult to obtain because the speed is directly related to the weight in the car. Usual adjustments are made such that contract speed is obtained in the down direction with 50% load on the car. The empty car down speed should be maintainable at about 10% below contract speed and full load down speed should be maintainable at about 10% above contract speed.

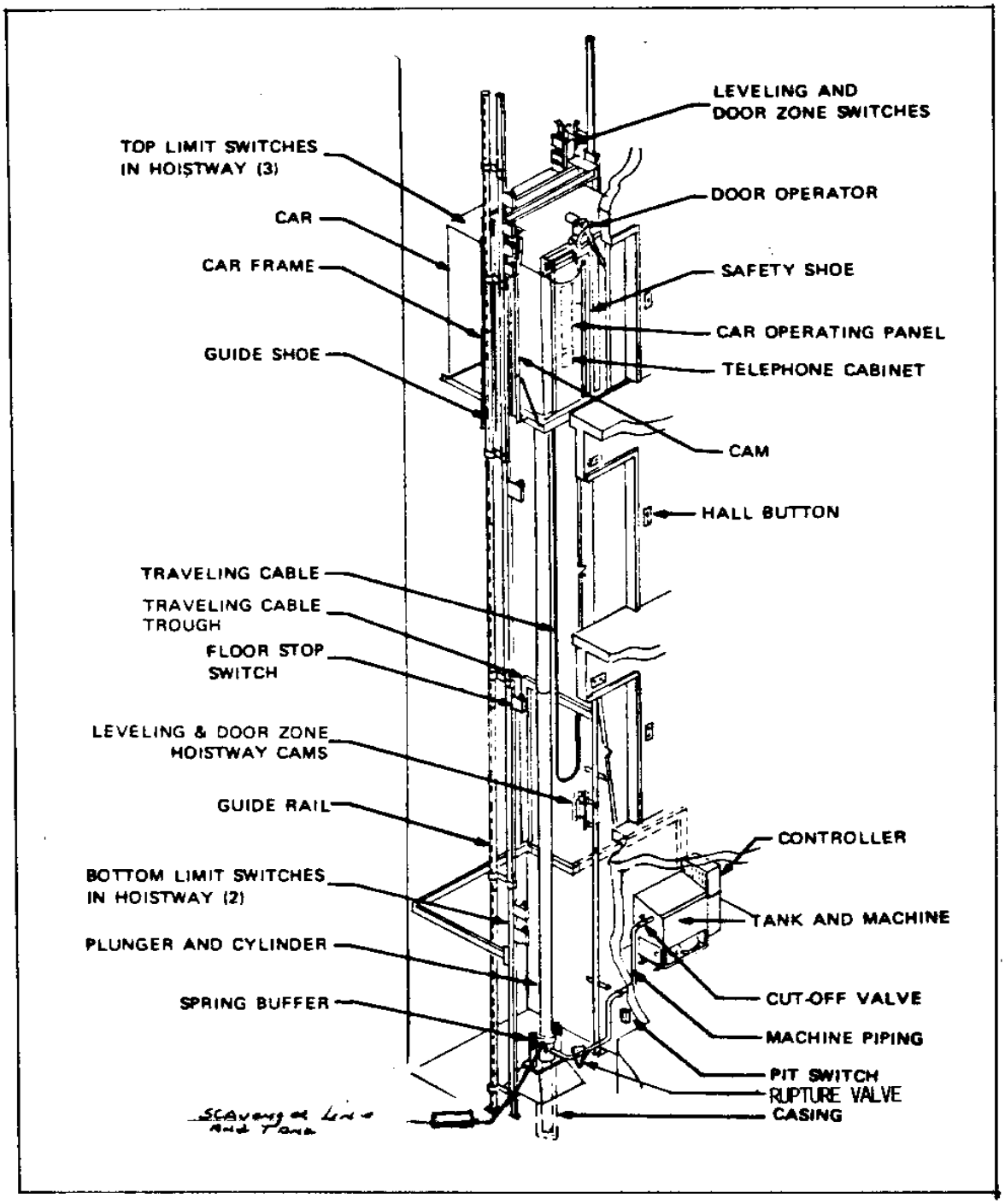

FIGURE 3-1
Typical Installation Of A Direct
Plunger Hydraulic Elevator

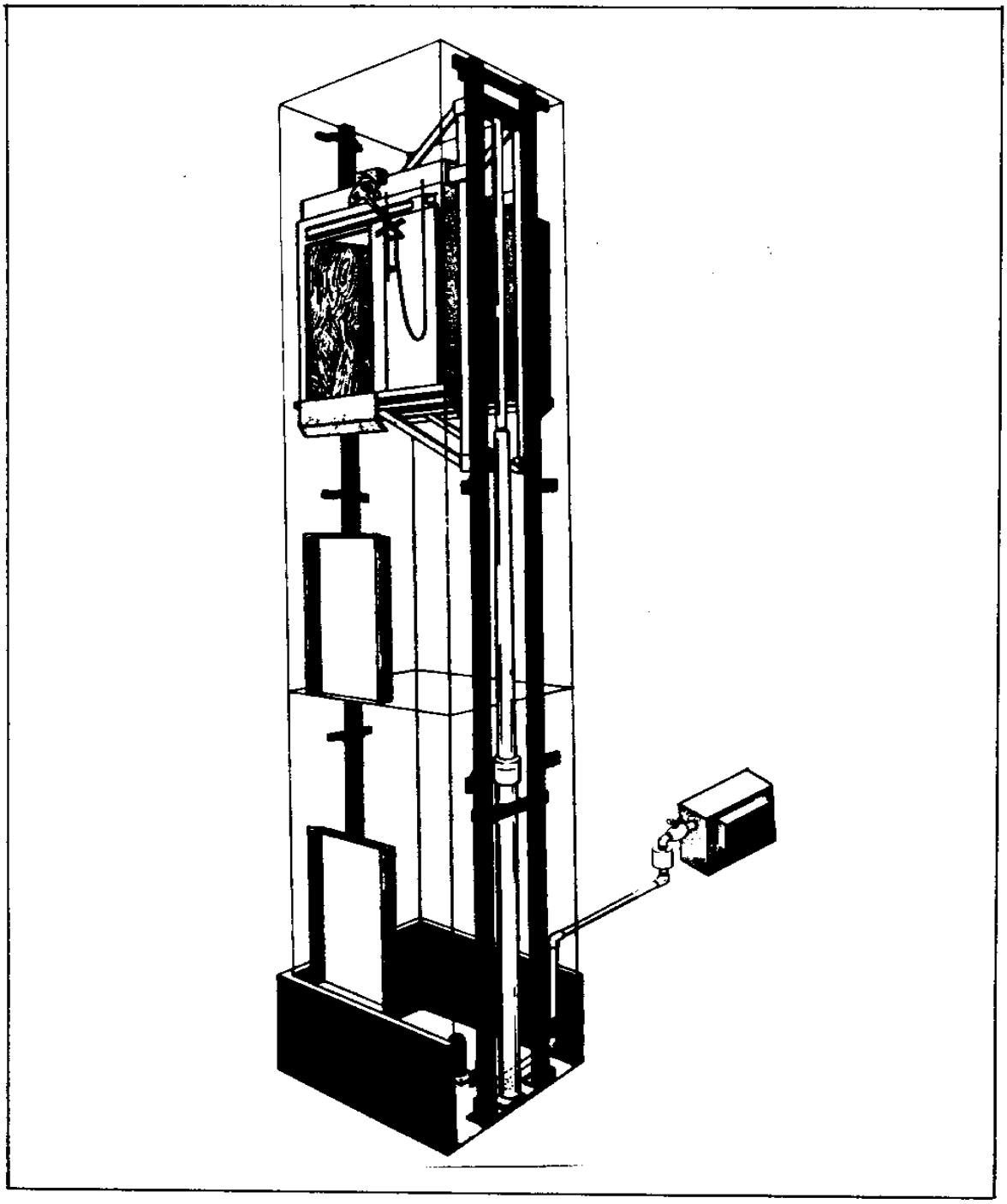

FIGURE 3-2
Typical Installation Of A Holeless Hydraulic Elevator

3.1.2.2 Door Opening Time. Procedures as outlined in Section 2.1.2.1 are applicable.

3.1.2.3 Door Closing Time. Procedures as outlined in Section 2.1.2.3 are applicable.

3.1.2.4 Door Hold Open Time. Procedures as outlined in Section 2.1.2.4 are applicable.

3.1.2.5 Door Closing Force. Procedures as outlined in Section 2.1.2.5 are applicable.

3.1.2.6 Performance Times (floor to floor times). Procedures as outlined in Section 2.1.2.6 are applicable. A calculated reasonable standard time for various types of elevators are shown in Table 3-1.

3.1.2.7 Acceleration, Deceleration, Floor Stopping And Noise. Procedures as outlined in Section 2.1.2.7 are applicable.

3.2 INSIDE THE CAR INSPECTION

3.2.1 Scope

Division 201 of the A17.2 Manual covers the inspections made from inside hydraulic elevator cars.

3.2.2 Operating And Signalling Devices

Procedures as outlined in Section 2.2.2 are applicable.

3.2.3 Car Enclosure

Procedures as outlined in Section 2.2.3 are applicable.

3.2.4 Car Doors

Procedures as outlined in Section 2.2.4 are applicable.

3.2.5 Car Sill

Procedures as outlined in Section 2.2.5 are applicable.

3.2.6 Freight Elevator Enclosures

Procedures as outlined in Section 2.2.6 are applicable.

TABLE 3-1
HYDRAULIC ELEVATORS
FLOOR-TO-FLOOR PERFORMANCE TIME SELECTION
Times in Seconds
Tolerance - plus or minus .2 seconds

SPEED (F.P.M.)	DOOR TYPE AND OPENING WIDTH[1]				ADJUSTMENT PER FOOT OF TRAVEL FROM 12'-0" STANDARD[2]
	SIDE OPENING				
	36"	42"	48"	54"	(SECONDS)
50	21.5	22.5	23.5	24.5	1.2
75	17.5	18.5	19.5	20.5	0.8
100	15.5	16.5	17.5	18.5	0.6
125	14.5	15.5	16.5	17.5	0.5
150	13.5	14.5	15.5	16.5	0.4
	CENTER OPENING				
50	19.5	20.0	20.5	21.0	1.2
75	15.5	16.0	16.5	17.0	0.8
100	13.5	14.0	14.5	15.0	0.6
125	12.5	13.0	13.5	14.0	0.5
150	11.5	12.0	12.5	13.0	0.4

1. Values are based on 7'-0" to 7'-6" high doors. Adjust values for 7'-6" to 8'-6" high doors, by adding the following factor:

   1/2 second for widths up to 42"
   1 second for widths over 42"

2. Values are based on 12'-0" floor-to-floor height. Adjust using factors noted for variation from this standard.

Find rated speed in the 1st column. Select standard floor-to-floor performance time from box under correct door type (side opening or center opening) and clear door opening width. Adjust this time by adding factor if doors are over 7'-6" high, and adding or subtracting appropriate amount per foot of travel over or under standard floor height of 12"-0".

NOTE: All times are based on heavy duty, medium speed, door operating equipment and optimum adjustment.

3.2.7 Firefighter's Service Instructions

Instructions as outlined in Section 2.2.7 are applicable.

3.2.8 Performance

Procedures as outlined in Section 2.2.8 are applicable.

3.3 OUTSIDE THE CAR INSPECTION

3.3.1 Hoistway Entrance

Division 202 of the A17.2 Manual covers the inspections made from outside hydraulic elevator cars. Items and procedures as outlined in Section 2.3.1 are applicable.

3.3.2 Closing Force

Instructions as outlined in Section 2.3.2 are applicable.

3.3.3 Access Switch Operation

Items and procedures as outlined in Section 2.3.3 are applicable.

3.3.4 Emergency Key Access

Items and procedures as outlined in Section 2.3.4 are applicable.

3.3.5 Operation And Signalling Devices

Procedures as outlined in Section 2.3.5 are applicable.

3.3.6 Firefighter's Service Instructions

Instructions as outlined in section 2.3.6 are applicable.

3.4 CAR TOP INSPECTION

3.4.1 Scope

Division 203 of the A17.2 covers most of the inspections made from the top of hydraulic elevators. Procedures as outlined in Section 2.4.1 are applicable.

3.4.2 Anti-Creep

Item 203.1 of the A17.2 Manual covers the testing of the anti-creep leveling devices. Be advised, that even though the A17.1 Code and A17.2 Manual relate to a particular anti-creep device, it is more of a function that is being checked and not a specific device. Most manufacturers incorporate the anti-creep operation into the normal leveling function using their usual floor position system. It is important that this anti-creep test be conducted on every inspection. This function prevents the car from drifting away from the floor. It should function with the emergency stop in the car in the open position and this should be checked. It should not operate if the emergency stop switch in the top of car operating device is open.

3.4.3 Car Top

Procedures as outlined in Section 2.4.3 are applicable.

3.4.4 Door Operator

Procedures as outlined in Section 2.4.4 are applicable.

3.4.5 Hoistway Entrances

Procedures and figures as outlined in Section 2.4.5 are applicable.

3.4.6 Covers And Guards

Procedures as outlined in Section 2.4.6 are applicable.

3.4.7 Hoistway Ventilation

Procedures as outlined in Section 2.4.7 are applicable.

3.4.8 Wiring

Procedures as outlined in Section 2.4.8 are applicable.

3.4.9 Guides

Procedures as outlined in section 2.4.9 are applicable.

3.4.10 Hoistway Housekeeping

Procedures as outlined in Section 2.4.10 are applicable.

3.4.11 Operating Speed

The elevator speed should be checked with a tachometer to verify that the elevator is operating at rated speed. An elevator operating below rated speed is not providing full service and should be adjusted. occasionally, an elevator is found operating over the rated speed.

3.5 OVERHEAD MACHINERY SPACE OR MACHINE ROOM

3.5.1 Scope

Division 204 of the A17.2 Manual describes the various inspections that are made in the machinery space or machine room. However, the inspector must go beyond these areas and closely examine all the elevator equipment.

3.5.2 Main Line Switch

Procedures as outlined in Section 2.5.2 are applicable.

3.5.3 Relief Valve

The A17.1 Code and A17.2 Manual specifically addresses the inspection requirements for the relief valve. (The operation of this device prevents the building of pressure in the system beyond a set limit if for some reason the elevator landed on the stop ring or was blocked from moving up the hoistway). The certified inspector should follow the steps outlined in the A17.2 Manual as close as possible to assure nothing is overlooked. Be sure the seal is in place and that it is properly located. The seal most used is the lead block and wire type, but there are other types which provide the same degree of security. The seal is used to indicate whether adjustments have been modified from the set position. Be sure that seals are placed in such a position that it is broken if adjustment changes are made. Occasionally, seals are found in a position that modification can be made and the seal remains intact.

3.5.4 Oil Leakage

Item 204.6 of the A17.2 Manual relates to checking for excessive oil in drip pans under the pump unit. Good maintenance will keep oil leakage to a minimum. There will be some because of vibration, but it can be kept to a minimum. Some pump units are designed where components are housed in the oil storage tank. (See Figure 3-3 and 3-4) One of the reasons for this is to reduce the need for tight fittings. Leakage indicates a potential problem and, when found, the problem should be corrected.

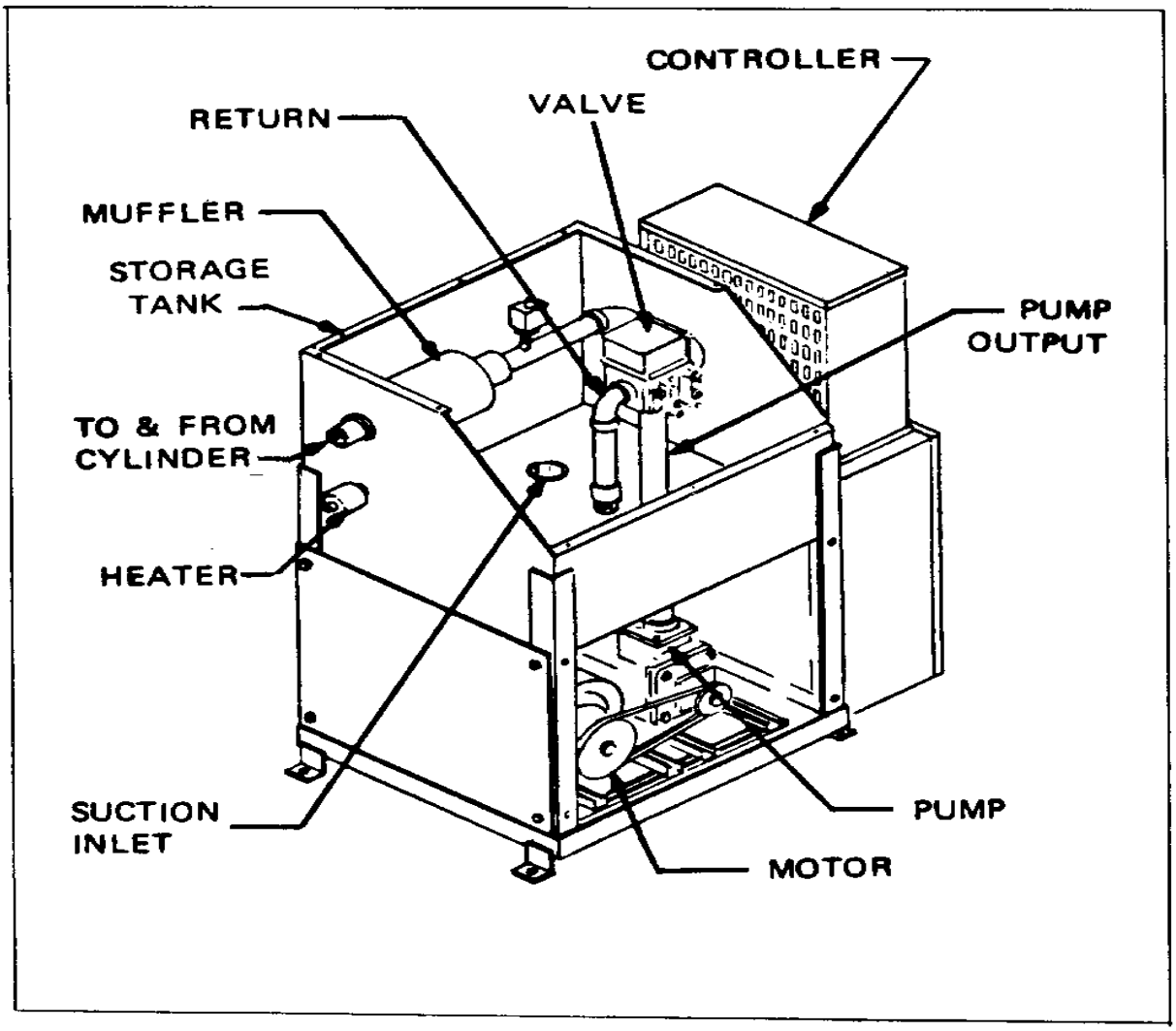

FIGURE 3-3
Typical Hydraulic Pump Unit With Some Components Located In The Oil Storage Tank

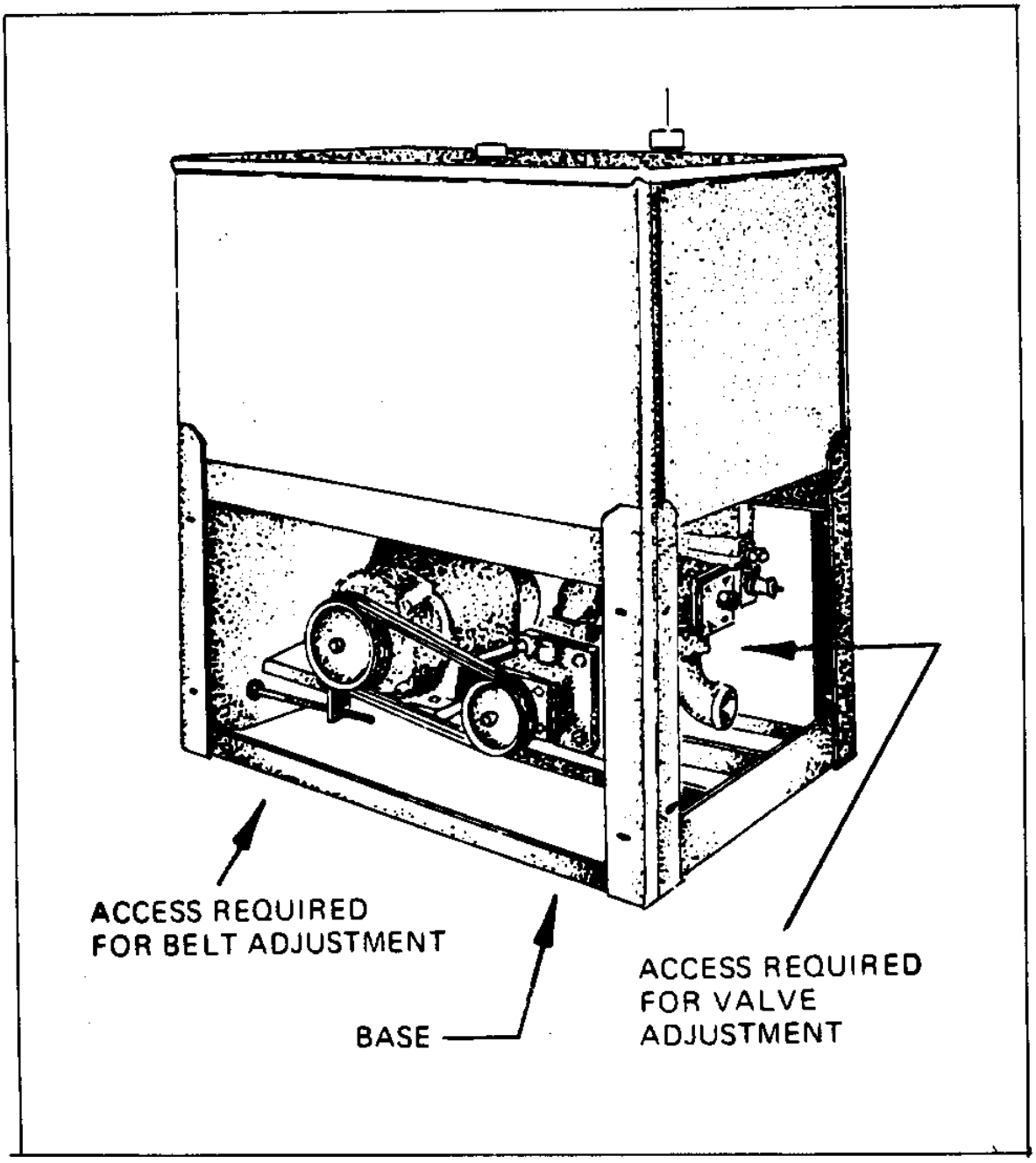

FIGURE 3-4
Typical Hydraulic Pump Unit With Components
Located Below The Oil Storage Tank

3.5.5 Guards

Procedures as outlined in Section 2.5.5 are applicable.

3.5.6 Bearings

A thorough check of the pump motor and pump bearings should be made on each inspection trip. Problems in these areas do not happen over night. If found early, they can greatly reduce repair costs and time. Bearing problems are detected by sound and/or heat.

3.5.7 Control Equipment

The A17.2 Manual outlines a complete inspection of the control equipment. Special attention should be given to the following specific items:

a. Condition of relay contacts and shunts.
b. Broken or cracked resistance tubes or resistance grids.
c. Condition of fuses and that they are sized in accordance with manufacturer's requirements.
d. Contact arcing and damage resulting from arcing.
e. Contact alignment.
f. Excessive heating of coils and resistance and damage resulting from heat.

3.5.8 Machine Room

Procedures as outlined in Section 2.5.12 are applicable.

3.5.9 Machine Room Access

Procedures as outlined in Section 2.5.13 are applicable.

3.6 PIT INSPECTION

3.6.1 Scope

Division 205 of A17.2 Manual describes the various inspections which are made in the pit. These should be followed very closely. The beginning of Division 105 describes various safety precautions that should be followed when making this part of the inspection.

3.6.2 Housekeeping

Procedures as outlined in section 2.6.2 are applicable.

3.7 PERIODIC INSPECTION AND TESTS

3.7.1 Scope

Division 210 of the A17.2 Manual describes various operational tests that are required to be performed. Those included under item 210.1 are to be performed annually while those under 210.2 are every three years and under 210.3 every five years. It should be specifically documented on the inspector's report that these tests have been performed, plus the dates the tests were made.

3.7.2 Standby Power

Procedures as outlined in section 2.7.8 are applicable.

3.7.3 Door Closing Force

Procedures as outlined in Section 2.7.9 are applicable.

3.7.4 Firefighter's Service

Procedures as outlined in Section 2.7.10 are applicable.

CHECKLIST FOR INSPECTION AND TEST OF HYDRAULIC ELEVATORS
(For direct plunger without safeties or counterweights)

This checklist is to serve only as a guide. For complete requirements and test procedures refer to ANSI/ASME A17.1 and ANSI/ASME A17.2

Address _____

_____

Identification No. _____

Inspection date _____

Installation date _____

Alteration date _____

Rated load _____

Rated speed _____

Classification _____

Type of operation _____

Type of inspection and test:

☐ Routine

☐ Periodic (including routine)

☐ Acceptance (including routine and periodic)

Additional information _____

CHECK	A17.1 RULE	A17.2 ITEM Routine	Periodic	Acceptance	CONDITION
INSIDE THE CAR					
1.1 Emergency stop switch	210.2(e)	101.3a	101.3a	101.3a	
1.2 Car emergency signal	211.1	101.6	101.6	121.6 121.3	
1.3 Rated load, platform area Capacity and data plate	207.1 207.3	101.1	101.1	121.1	
1.4 Signs in freight elevator	207.5	101.1	101.1	121.1	
1.5 Car enclosure	204.1 204.2 204.3	101.1	101.1	121.2	
1.6 Ventilation of passenger elevators	204.2c	101.1	101.1	121.2	
1.7 Side emergency exits	204.2e 301.7	101.1	101.1	121.2	
1.8 Car door or gate	204.4 204.5 204.6	100.6	100.6	121.5	
1.9 Car door or gate electric contacts	111.2	100.3 100.4	100.3 100.4	121.6	
1.10 Closed position of car door or gate	111.7c 111.12	100.4b 100.2	100.4b 100.2	100.4b 100.2	
1.11 Power opening of doors or gates	112.2	100.6 App. F	100.6	121.6 App. F	
1.12 Power closing of doors or gates	112.3 112.4	100.5	100.5	121.5	
1.13 Door reopening device	112.5	100.5	100.5	121.5	

PART 1 OF 5

CHECKLIST FOR INSPECTION AND TEST OF HYDRAULIC ELEVATORS
(For direct plunger without safeties or counterweights)

Address _____ ID No. _____ Date _____

CHECK	A17.1 RULE	A17.2 ITEM Routine	Periodic	Acceptance	CONDITION
INSIDE THE CAR (continued)					
1.14 Car floor and landing sill	203	101.4	101.4	101.4	
1.15 Operating control device	210.1	101.3 100.8	101.2 100.8	101.3	
1.16 Emergency signal device	211	101.6	101.6	101.6	
1.17 Car lighting (including emergency)	204.7	101.2a 101.2b	101.2a 101.2b	121.3 121.6	
OUTSIDE HOISTWAY					
2.1 Car platform guard	208.9	102.6	102.5	102.5	
2.2 Power closing of hoistway doors	112.3	100.6	100.5	100.5	
2.3 Door closing force	112.3a	-	110	121.6	
2.4 Sequence operation	112.6	100.6d	100.6d	100.6d	
2.5 Hoistway enclosure	100.1	102.1 103.21	102.1 103.21	123.5 103.21	
2.6 Hoistway doors	110.2	100.1	100.1	123.7	
2.7 Vision panels	110.7	103.13	103.13	123.7	
2.8 Hoistway door locking device	111.1	100.2a	100.2a	100.2a	
2.9 Elevator leveling device	111.8	102.3	102.5	123.7	
2.10 Access to hoistway	111.9	102.3 102.3a	102.2 102.3a	122.3	
2.11 Emergency door	110.1	100.7	100.7	100.7	
TOP OF CAR					
3.1 Top clearance and refuge space	300.3	103.1	103.1	123.10	
3.2 Stop switch top of car	[illegible]	103	103	103	
3.3 Top car operating device	306.1	103.14	103.14	123.2	
3.4 Car top light switch	204.7a	103.14	103.14	123.1	
3.5 Traveling cables junction	102.1b	103.15	103.15	103.15	
3.6 Speed limiting switch	306.2a 306.2b	-	115.2a	124.5	
3.7 Door gate contacts, cams, etc. Hangers and connections	110	103.12 103.13	103.12 103.13	103.12 103.13	
3.8 Hoistway clearances	300.3	103.20 App. A	103.20	123.4 App. A	
3.9 Normal terminal stopping device	306.1	103.7	118.1	124.5	
3.10 Top emergency exit	204.1e	101.1	101.1	121.2	
3.11 Crosshead data plate	207.2 212.2a	103.3	103.3	123.6	

PART 2 OF 5

SAMPLE

FIGURE 3-5a
Checklist For Inspection And Test of Hydraulic Elevators
(For direct plunger without safeties or counterweights)

CHECKLIST FOR INSPECTION AND TEST OF HYDRAULIC ELEVATORS
(For direct plunger without safeties or counterweights)

Address _____ ID No. _____ Date _____

CHECK	A17.1 RULE	A17.2 ITEM Routine	Periodic	Acceptance	CONDITION
TOP OF CAR (continued)					
3.12 Multiple hoistway	100.1d	-	-	123.5	
3.13 Construction of hoistway	100	103.20	103.20	123.8	
3.14 Floor over hoistway	100.3	104.4	104.4	104.4	
3.15 Hoistway smoke control	100.4	103.26	103.26	123.5	
3.16 Guide rails, fastenings, and alignment	301.1	103.10 103.11	103.10 103.11	103.10 103.11	
3.17 Electrical wiring, pipes and ducts	102	103.23	103.23	103.23	
3.18 Floor numbers	211.4	103.22	103.22	103.22	
3.19 Landing sill guards, projections, and recesses	110.10 100	101.5 103.20	101.5 103.20	101.5 103.20	
3.20 Broken tape switch	206.2e(2)				
3.21 Car frame and slings	203	103.16	103.16	103.16	
3.22 Automatic leveling device	304.3	203.1 App. F	203.1	203.1 App. F	
MACHINE ROOM AND MACHINERY SPACE					
4.1 Enclosure of machine space	300.2	-	-	124.6	
4.2 Access to machine space	101.3	104.18	104.18	124.6	
4.3 Pressure tanks	304.3	204.8	204.8	204.8	
4.4 Head room in machine space	101.4	-	-	124.6	
4.5 Lighting machine space	101.5a	104.18	104.18	104.18	
4.6 Ventilation of machine and control space	101.5b	104.18	104.18	104.18	
4.7 Guards for exposed equipment	104.1	104.8	104.8	124.6	
4.8 Control valve	303.1	204.9	204.9	204.9	
4.9 Terminal stopping device	208	104.10	118	124.5	
4.10 Numbering of machines and disconnect switches	206.10 210.6	-	-	124.6 124.7	
4.11 Physical ground, electrical equipment	210.4	-	-	124.7	
4.12 Machine disconnect	306.7	-	-	124.7	
4.13 Pumps	-	204.1	204.1	204.1	
4.14 Relief and check valve	303.2	204.3	204.3	204.3	
4.15 Drives	-	204.3	204.3	204.3	
4.16 Flexible hose and fittings	303.1d	204.4	204.4	204.4	

PART 3 OF 8

CHECKLIST FOR INSPECTION AND TEST OF HYDRAULIC ELEVATORS
(For direct plunger without safeties or counterweights)

Address _____ ID No. _____ Date _____

CHECK	A17.1 RULE	A17.2 ITEM Routine	Periodic	Acceptance	CONDITION
MACHINERY ROOM AND MACHINERY SPACE (continued)					
4.17 Tank and oil level	304	204.5	204.5	204.5	
4.18 Controller wiring hoses, etc.	-	104.16	104.16	104.16	
4.19 Piping, wiring, and ducts	103	104.19	104.19	104.19	
4.20 Piping supply line and shutoff valve	303.1 303.3	204.7	204.7	204.7	
PIT					
5.1 Pit light and stop switch	106.1e 106.11	106.1	106.1	125.3 125.4	
5.2 Pit access	106.1d	105	105	125.6	
5.3 Car clearance and runby	107	106.11	106.11	125.1	
5.4 Construction of oil buffer	201.4	106.2	106.2	125.2	
5.5 Oil buffer plunger return	201.4e	-	114.2d 115.2	115.2	
5.6 Oil buffer oil level gage	201.4f	106.2	114.2g 115.2	106.2	
5.7 Oil buffer data plate	201.4k	106.2	106.2	106.2	
5.8 Spring buffer and data plate	201.3a	106.3	106.3	106.3	
5.9 Solid plunger	201.2	106.4	106.4	106.4	
5.10 Cylinder air relief	302.3f	-	-	-	
5.11 Plunger oil protection	302.2e	206.1	206.1	206.1	
5.12 Pipes, valves, fittings, and supports	303.3 303.1c	204.7	204.7	204.7	
5.13 Pipe [illegible]	302.3	206.2	206.2	206.2	
5.14 Pipe or connection to cylinder	[illegible]1c	206.3	206.3	206.3	
5.15 Normal stopping device	208	103.7	103.7	103.7	
5.16 Guard between [illegible]	106.1c	106	106	125.6	
5.17 Pit access	106.1d	106	106	125.6	
5.18 Illumination	106.1e	106.1	106.1	125.4	
5.19 Traveling cable	210.4	106.12	106.12	106.12	
5.20 Car frame and platform	203	106.13	106.13	106.13	
5.21 Pit construction	106.1b	106.1	106.1	106.1	
TEST					
6.1 Bottom plunger clearance	1006.2d	-	-	220.3	
6.2 Flexible hose and fittings	1006.3b	-	210.2a	210.2a	

PART 4 OF 8

SAMPLE

FIGURE 3-5b
Checklist For Inspection And Test Of Hydraulic Elevators
(For direct plunger without safeties or counterweights)

CHECKLIST FOR INSPECTION AND TEST OF HYDRAULIC ELEVATORS
(For direct plunger without safeties or counterweights)

Address _____ ID No _____ Date _____

CHECK	A17.1 RULE	A17.2 ITEM Routine	Periodic	Acceptance	CONDITION
TEST (continued)					
6.3 Oil buffer (a) Annual (b) 5 year (c) Acceptance	1002.2e 1002.3c 1003.2e	105.2 - -	114.2 115 -	- - 125.2	
6.4 Terminal stopping devices	1002.2e	103.7	116	116	
6.5 Firefighters' service	1002.2f	103.7	116	116	
6.6 Emergency power operation	1002.2g	104.16	118	118	
6.7 Power door closing force	1002.2h	-	119	119	
6.8 Pressure tank(s) (Hydro)	1005.6[illegible]	-	210.2c	210.2c	
6.9 Pressure switch	1006.3d	-	210.3	210.3	
6.10 Recycle operation	1006.13	-	-	220.5	
6.11 Working pressure	1006.2b	-	-	-	
6.12 Relief valve setting	1006.2[illegible]	-	210.1c	210.1c	
6.13 Static load test	1006.2b	-	210.1c	210.1c	
6.14 Emergency terminal speed limiting device	1006.2c[illegible]	[illegible]	210.3[illegible]	210.2d	

Performed by _____ Inspector _____

PART 5 OF 5

SAMPLE

FIGURE 3-5c
Checklist For Inspection And Test Of Hydraulic Elevators
(For direct plunger without safeties or counterweights)

NAME/STREET | CITY | STATE | ZIP | DATE | TEL

OUR CONTRACT # | OCCUPANT | OWNER/AGENT

CAR # | CITY/STATE # | MFGR. # | MFGR. | CAPACITY LBS. | SPEED FPM

PASSENGER ☐ SERVICE ☐ FREIGHT ☐ (if freight) C1 ☐ C2 ☐ C3 ☐ GEARED ☐ GEARLESS ☐ HYDRAULIC ☐

MACHINE
Make
Type
Serial
Location: OHC ☐ Below ☐ Side ☐
Roping - 1:1 ☐ 2:1 ☐

GEARED
Sandpacking
Mfgr.
P/N
Thrust Bearing
Mfgr.
P/N
Casehead Bearing
Mfgr.
P/N

GEARLESS
Sheave Bearing
Mfgr.
P/N
Comm. Bearing
Mfgr.
P/N

HOISTING/PUMP MOTOR
Make
Serial
Type
RPM
Amps
Volts
Phase
Hertz

BRUSHES
Quantity
Mfgr.
P/N
Grade #

BEARING
Front Mfgr.
P/N
Rear Mfgr.
P/N

BRAKE
Type
Coil P/N
Quantity Lining Pieces
Size ___ x ___ x ___
Material
Quantity of Rivets
Size ___ x ___

SELECTOR
Yes ☐
No. ☐
Mfgr.
Type

CONTROLLER
Make
Serial
Type
W/D #
Volts
Our W/D #

GENERATOR MOTOR
Make
Serial
Type
H P
RPM
Amps
Volts
Phase
Hertz

GENERATOR
Make
Serial
Type
RPM
Amps
Volts
K.W.

BRUSHES
Quantity
Mfgr
P/N
Grade #

BEARING
Front Mfgr
P/N
Rear Mfgr.
P/N

EXCITER
Make
Serial
Type
RPM
Amps
Volts
K.W.

BRUSHES
Quantity
Mfgr
P/N
Grade #

BEARING
Front Mfgr
P/N
Rear Mfgr.
P/N

HYDRAULIC RAM
Mfgr.

HYDRAULIC RAM PACKING
Quantity Pieces
Diameter
Mfgr.
P/N

DOOR OPERATOR
Mfgr.
Type
Door Motor Mfgr.
Type HP
AC ☐ DC ☐ RPM
Amps Volts
1 SPS.O. ☐ 2 SPS.O. ☐ C.O. ☐
Width Opening Inches
Door Close Time Seconds
Door Speed 1' of Fast Speed
Lbs. of Thrust (close)
Nudging Seconds
Door Open Time Seconds

CAR DOOR HANGER ROLLER
Mfgr.
P/N

CAR DOOR GIB
Quantity/Door
Mfgr.
P/N

HATCH DOOR HANGER ROLLER
Mfgr.
P/N

HATCH DOOR GIB
Quantity/Door
Mfgr.
P/N

CAR SAFETY
Governor Mfgr.
Type
Tripping Speed FPM
Potential FPM
Field FPM
Safety Mfgr.
Type

C.W.T. SAFETY
Governor Mfgr.
Type
Tripping Speed FPM
Potential FPM
Safety Mfgr.
Type

CAR - CWT GUIDES
Car-Roller ☐ Side ☐
Mfgr.
Wheel P/N
Gib P/N
CWT Roller ☐ Side ☐
Mfgr.
Wheel P/N
Gib / P/N

CABLES/CHAINS

	Qty.	Length	Dia.	Const.	Mat'l.	Mfgr.
Hoist						
Drum Cwt.						
Car Cwt.						
Governor						
Compensation						
Selector Tape						
Selector Cables						
Compensating Cables/Chains						

TRAVELING CABLES

Cable #	Type	No. Cond.	Wire Size	Length	Mfgr.
1					
2					
3					
4					
5					
6					
7					
8					

FIGURE 3-6
Sample Elevator Equipment Profile Form

CHAPTER 4

DUMBWAITERS

4.1 INTRODUCTION

NOTE: Paragraphs identified with a vertical line in the left margin are inspections that should be made by certified Vertical Transportation Inspectors only.

4.1.1 Scope

The inspection procedure of dumbwaiters included in this chapter is not only an inspection of all safety related functions, but is also an inspection to determine the condition of the equipment and identify areas that need improvement. Proper maintenance is needed to keep the dumbwaiters operating. When preventative maintenance is lacking, shut downs will occur. See Figures 4-1 and 4-2, which show various dumbwaiter arrangements with component names that will be used in this chapter.

4.1.2 Special Criteria

The size of dumbwaiters are restricted by the A17.1 Code. The requirements for dumbwaiters are considerably different from elevators because the size restrictions are made specifically to prevent people from riding in dumbwaiters. They are made exclusively to carry material. This restriction also reflects on inspection of this equipment.

4.1.2.1 Hoistway Inspection. All hoistway inspections are made from the outside of the hoistway. Hoistway inspections are made by moving the car away from the landing and observing the hoistway through the open door.

4.1.2.2 Machine Room Inspections. The requirements for location of the dumbwaiter hoisting equipment are also quite different from those for elevators. This is a direct result of people not being transported. The A17.1 Code allows the hoisting equipment and control equipment to be located within the hoistway. It will be found that in the majority of installations, the equipment will be located in the confines of the hoistway and accessible from access doors. There will be, however some incidents when you have "walk-in" machine rooms. In this section we will use the term "machine room" to relate to both locations.

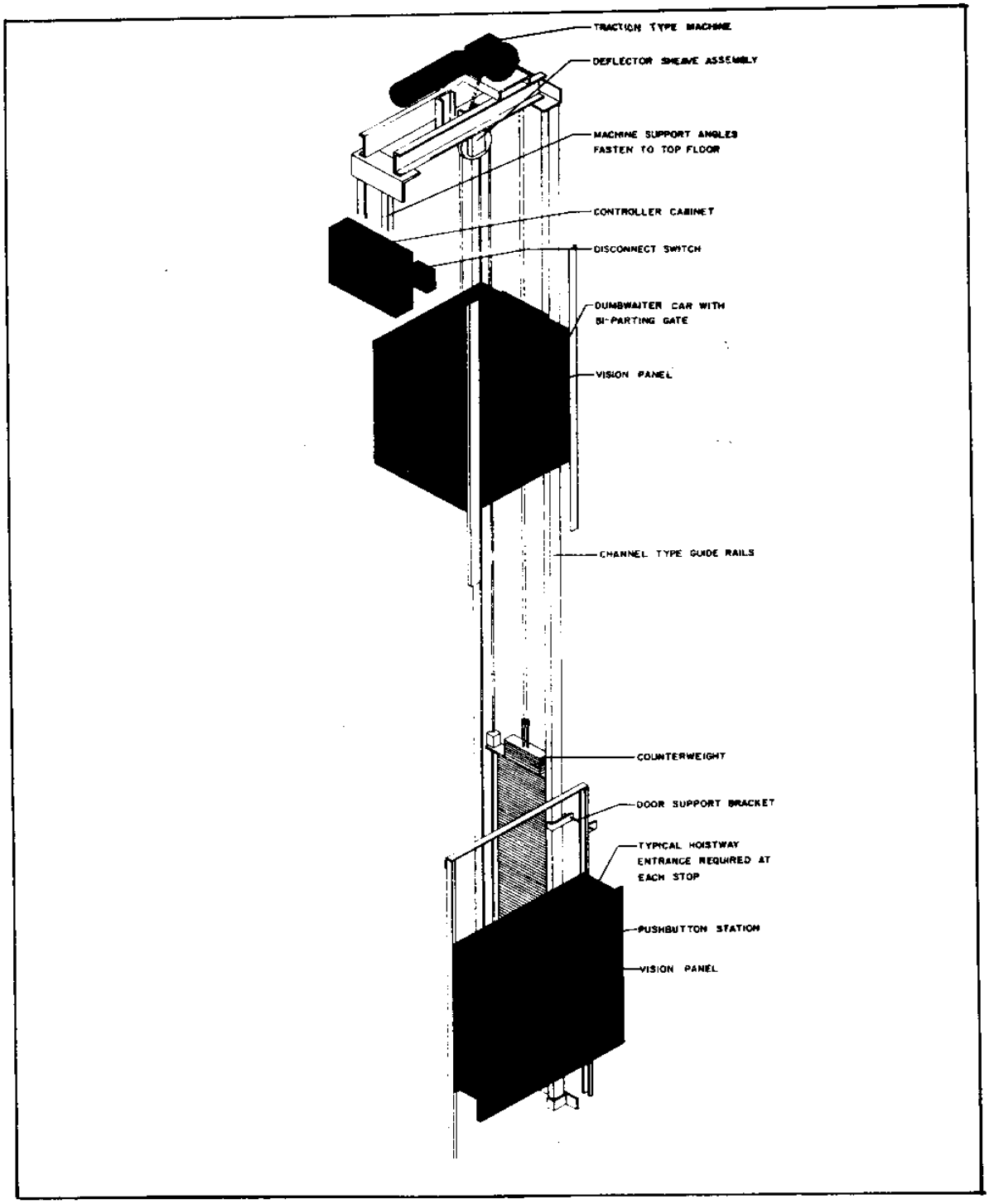

FIGURE 4-1
Typical Installation Of A Overhead One To One (1:1) Traction Machine Dumbwaiter

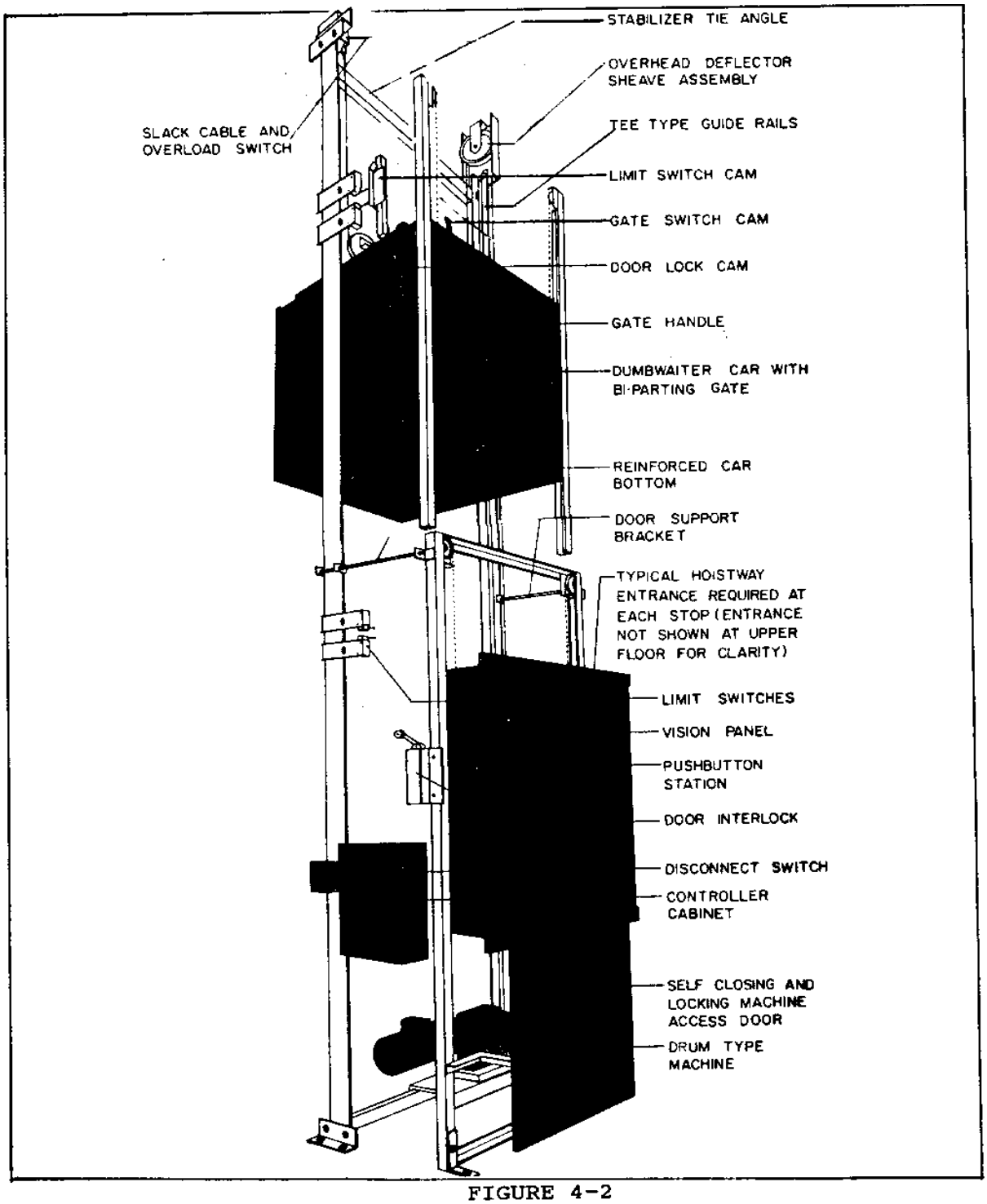

FIGURE 4-2
Typical Installation Of A Basement Two To One (2:1) Drum Machine Dumbwaiter

4.2 OUTSIDE HOISTWAY INSPECTION

4.2.1 Hoistway Doors

Figures 4-3 and 4-4 show various dumbwaiter hoistway door arrangements with description and component names which will be used in this section. Open and close each manually opened hoistway door, examine each, including any hand-operated latches, and note any broken glass panels in the doors or any structural defects in the frames. Where vision panels are provided, note the type of glass used in the panel and whether it is securely in place. Try to open the door by pulling on it, and also by lifting it without touching the lock or latch. The door should not open. If it can be opened, the lock or latch is defective, or the door has sagged so that the lock or latch is not engaging properly. on installations equipped with fully automatic, or semi-automatic doors or gates, note whether they are opening and closing in their intended manner and that operation is smooth and quiet. The operating mechanism of such devices should be inspected for wear and proper adjustment.

4.2.1.1 Hoistway Door Locking Devices. The Code requires all hoistway doors on new dumbwaiters to be equipped with a hoistway door mechanical lock and electric contact or hoistway-unit-system hoistway door interlock. The specific use is dependent upon the height of the bottom of the door above the floor. Inspectors are advised to refer to the list of approved interlocking devices issued by jurisdictional authorities.

4.2.1.1.1 Hoistway-Door Interlock. A hoistway-door interlock (See Figure 4-5) is a device having two related and interdependent functions which are to prevent the operation of the driving machine by the normal operating device unless the hoistway door is locked in the closed position. This also prevents the opening of the hoistway door from the landing side unless the car is within the landing zone and is either stopped or being stopped.

4.2.1.1.2 Hoistway-Door or Gate Locking Device. A hoistway-door or gate locking device secures a hoistway door or gate in the closed position and prevents it from being opened from the landing side except under certain specified conditions.

4.2.1.1.3 Hoistway-Door Combination Mechanical Lock and Electric Contact. A hoistway-door combination mechanical lock and electrical contact (See Figure 4-6) is a combination mechanical and electrical device with two related, but entirely independent functions. They are to prevent operation of the driving machine by the normal operating device unless the hoistway door is in the closed position and to lock the hoistway door in the closed position and prevent it from being opened from the landing side unless the car is within the landing zone.

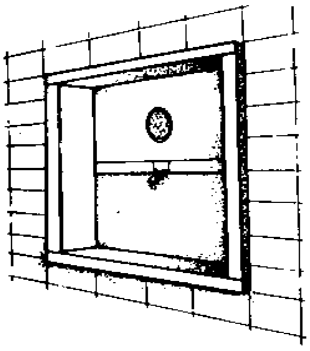

VERTICAL BY-PARTING DOORS: These are the most common type. They consist of two door panels which meet at the center of the opening, one sliding downward and the other sliding upward when opening. A wire glass vision panel is usually provided in the upper door panel. The panels are connected to each other with chains at either side of the opening. This type of dumbwaiter unit resembles, very closely, a miniature freight elevator door assembly.

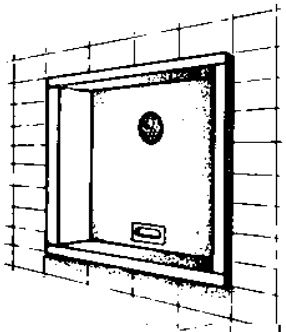

SLIDE-UP DOORS: This type of unit consists of a single door panel which is attached to a counterweight. The door slides up to open. This type can be used when pit space is limited and there would not be room for a bi-parting door to operate.

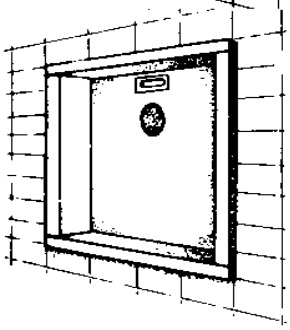

SLIDE DOWN DOORS: This unit consists of a single counterweighted door panel, just as with the slide-up type. The difference, obviously, is that this door will slide downward to open. A vision panel is commonly provided in the door panel, as is the case with the slide-up type. This type of unit is commonly provided in an installation where the dumbwaiter comes up under a bar or counter. It can be used on any application where the overhead space is limited, making the installation of other types of doors impractical or impossible.

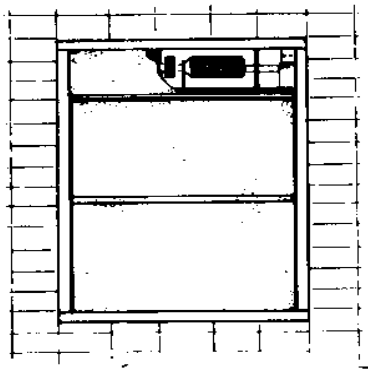

MOTORIZED DOORS: This illustrates another type of unit, the motorized dumbwaiter door unit. It is most commonly associated with the vertical bi-parting and slide up type dumbwaiter doors.

FIGURE 4-3
Types Of Dumbwaiter Units

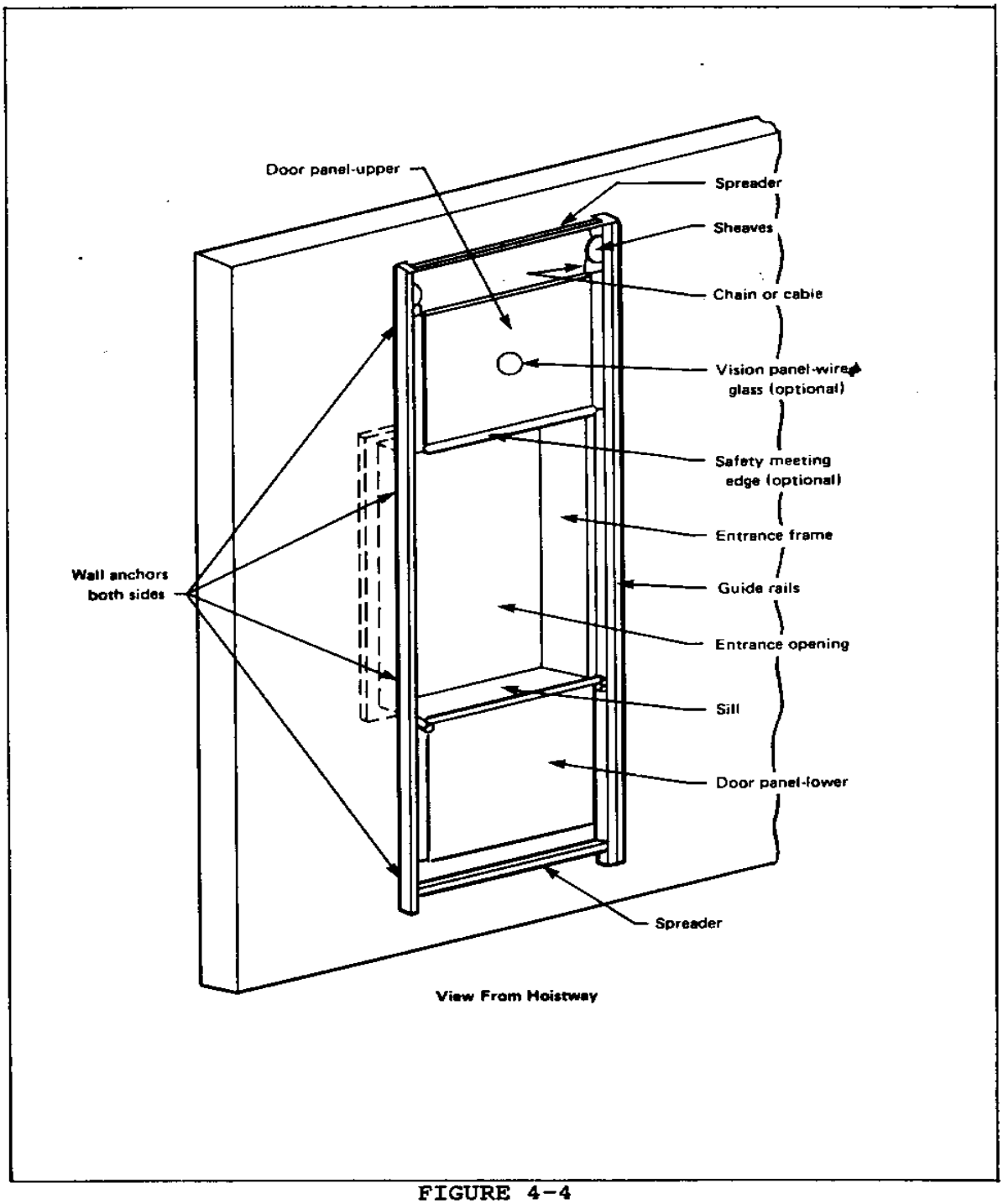

FIGURE 4-4
Typical Dumbwaiter Assembly Installation
For Vertically Bi-Parting Doors

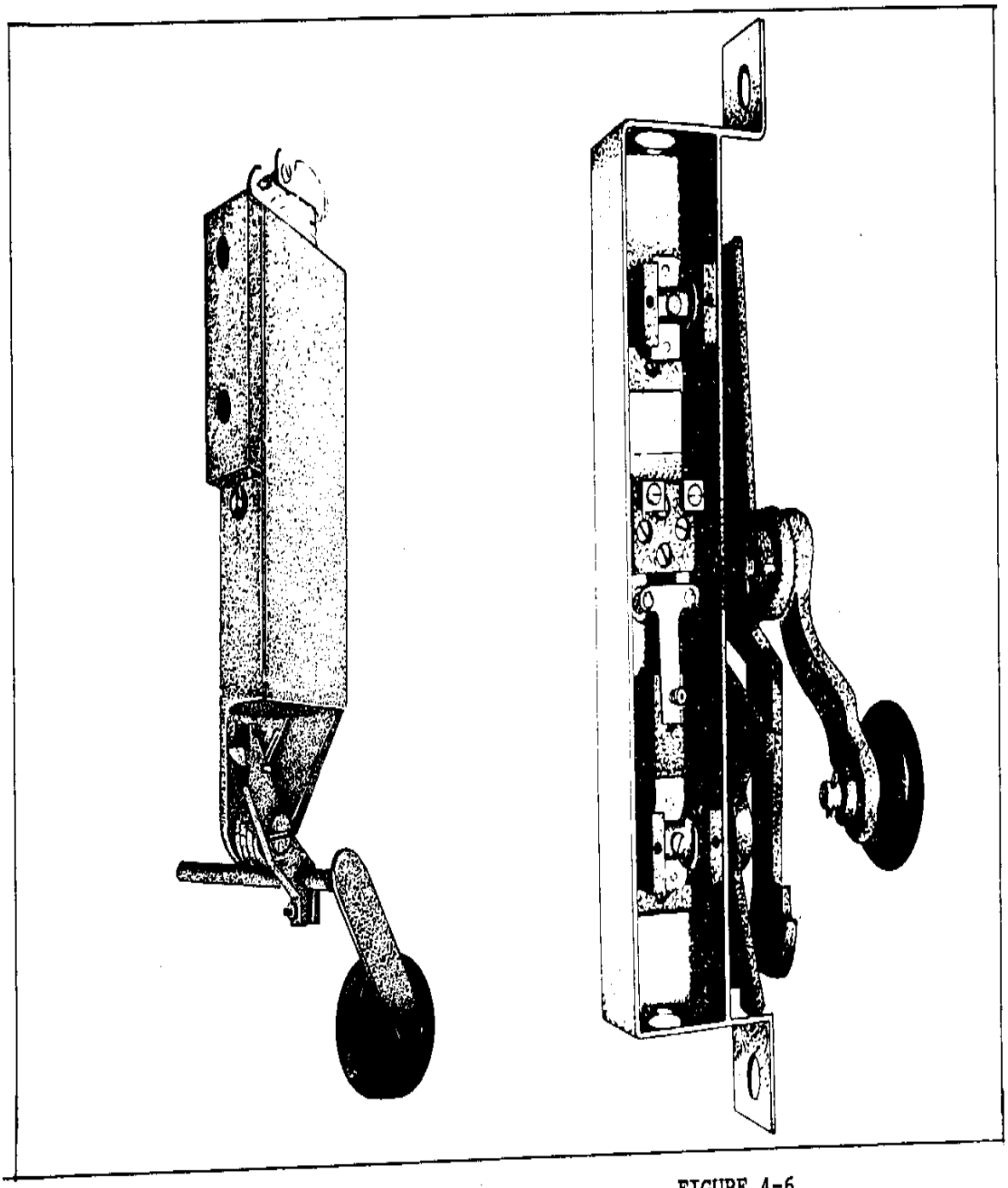

FIGURE 4-5
Typical Interlock

FIGURE 4-6
Typical Lock And Contact

As there is no positive mechanical connection between the electric contact and the door-locking mechanism, this device insures only that the door will be closed, but not necessarily locked, when the car leaves the landing. Should the lock mechanism fail to operate as intended when released by a stationary or retiring car-cam device, the door can be opened from the landing side even though the car is not at the landing. If operated by a stationary car-cam device, it does not prevent opening the door from the landing side as the car passes the floor.

4.2.1.2 Inspection of Interlocks and Cams. The inspection of the interlocks and their operating cams or similar devices can be made more conveniently by moving the dumbwaiter car below the opening. On doors or gates equipped with interlocks which are unlocked automatically by retiring cams or similar devices, when the car is in a landing or leveling zone, place the car at each landing at such a position above and below the landing that the automatic unlocking device on the car cannot release the interlock. With the car door in the closed position and with the hoistway door fully open, close the hoistway door slowly from the landing side until the maximum clear opening is reached. Then the actuation of the operating device will cause the car to start. Measure the distance from the nearest face of the door sill to the nearest edge of the door or between the rigid meeting edges of biparting doors. Determine that from this position, the door cannot be reopened from the landing side. The measured distance should not exceed 3/8 inch for vertically sliding counterweighted doors or 3/4 inch for vertically sliding biparting counterbalanced doors. Inspect mechanical locks operated manually from the car, where used, with hoistway door electric contacts. With the door in the fully closed position, pull on the door which should be held closed by the lock. Determine that the locking member is in a position to lock the door when or before the contact is closed by the door. Where the locking members of such devices are operated by car cams, which are usually but not necessarily of the stationary type, place the door in the fully closed position and move the car a sufficient distance away from the floor to permit the locking member to lock the door. With the car in this position, pull or push on the door, which should be held closed by the lock. Release the lock manually and open the door. Then slowly close it to the position where the electric contact just closes and note whether the locking member is in a position to lock the door. Examine any stationary or retiring cams for operating interlocks, interlock contacts or door operators, to determine whether they are in correct alignment with the roller arm of the interlock or door operating mechanism, whether their travel is sufficient to insure proper operation of the interlocks or door operators, and whether wear of chains, sprockets, etc., is not excessive. Figure 4-7 shows a typical cam arrangement.

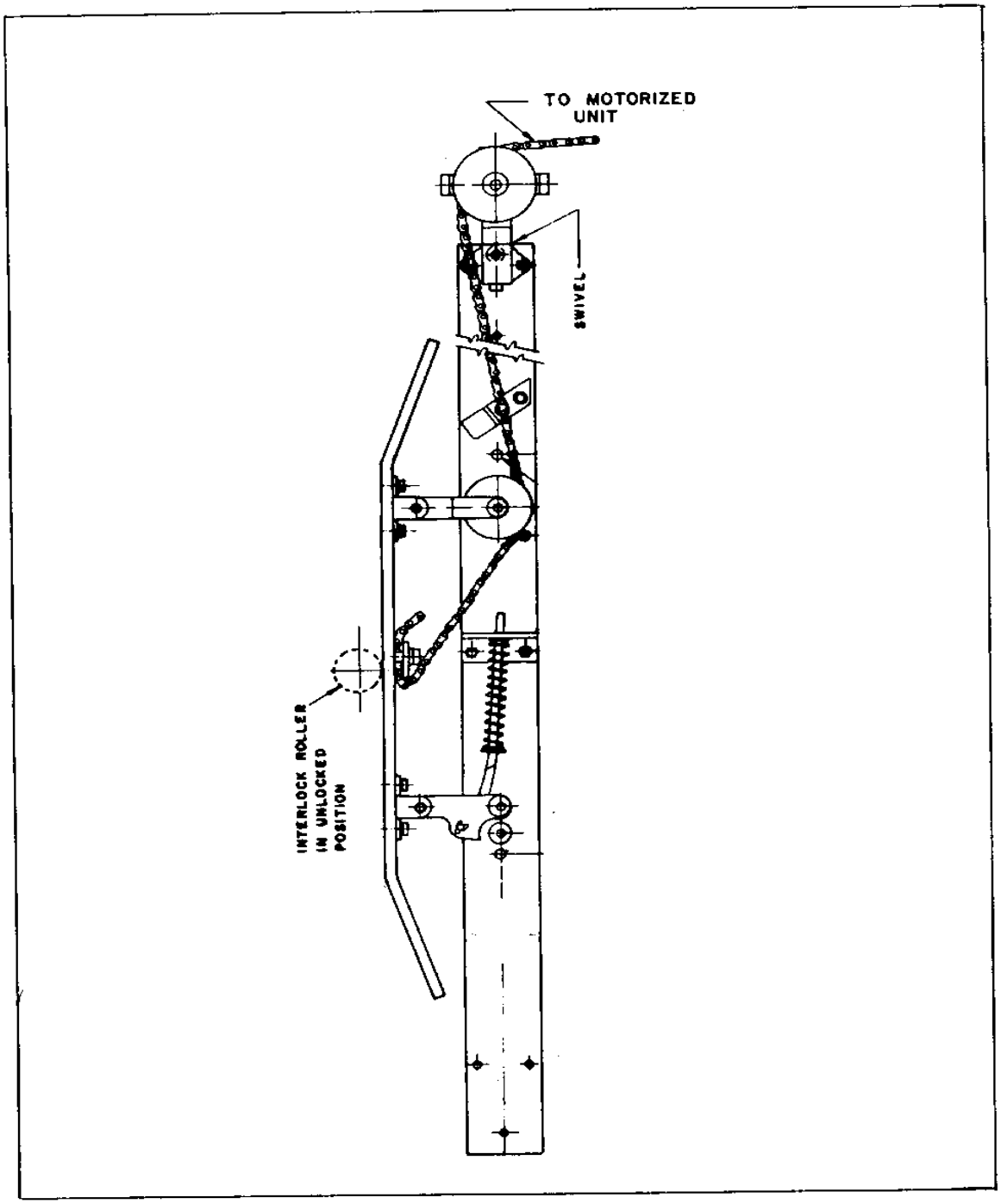

FIGURE 4-7
Typical Retiring Cam

Examine the name plates on hoistway door interlocks, or combination mechanical locks and electrical contacts, and note the data thereon to determine whether they are of a type approved by the authority having jurisdiction. Examine mechanical connections between the door, door locking or door closing or operating device and the interlock.

4.2.1.3 Power Operated Car and Hoistway Doors. Where the closing of car and hoistway doors is controlled by momentary pressure or by automatic means, check the operation. Examine all hoistway and car door operating motors or engines and cams, their locking and contact devices, switches or other operating mechanisms located on top of the car or in the hoistway, to determine whether there are any worn or broken parts, that all adjustments are in accordance with the manufacturer's recommendations, securely fastened in place, and that each device is properly lubricated in accordance with manufacturer's requirements. Hoistway door operators actuated by magnetic controls should be tested to determine that the car is within the landing zone, or within the limits of the leveling zone where an automatic leveling device is provided, before the control causes the door operator to open the hoistway door, and that the car is at rest or substantially level with the landing before the door is in the fully open position.

4.2.1.4 Inspection of Operating Hardware. Examine the condition of hoistway and car door tracks and guides to determine that they are securely fastened in place and are lubricated. Examine hoistway and car door counterweights, if any, to determine that they are properly guided or boxed, so as to retain the counterweight should the suspension means break. Examine car and hoistway door suspension members together with their connections, pulleys, and pulley supports. Hoistway door equipment is subject to heavy accumulation of lint and dust. Constant attention must be given to these areas by the person performing maintenance to keep up with housekeeping requirements. It is the inspector's responsibility to check and see that they are kept clean or shut downs will result.

4.2.2 Car Doors

Figure 4-8 shows a typical dumbwaiter car with component names which will be used in this chapter. Examine the car door and note any broken, bent or sprung members. operate doors to determine that they operate freely and that bottom sill-guide tracks or bottom guiding members are in place, securely fastened, and are not worn enough to permit the doors or gates to come out of their tracks at any position of their travel. Where a power-closed car door is provided with a reopening device, it should be tested. In any of these tests where the inspector uses an object to test the reopening device, it should not be inserted when the door is nearing its fully closed position. Actuate the device while the doors are being closed and note whether car and hoistway doors stop and reopen.

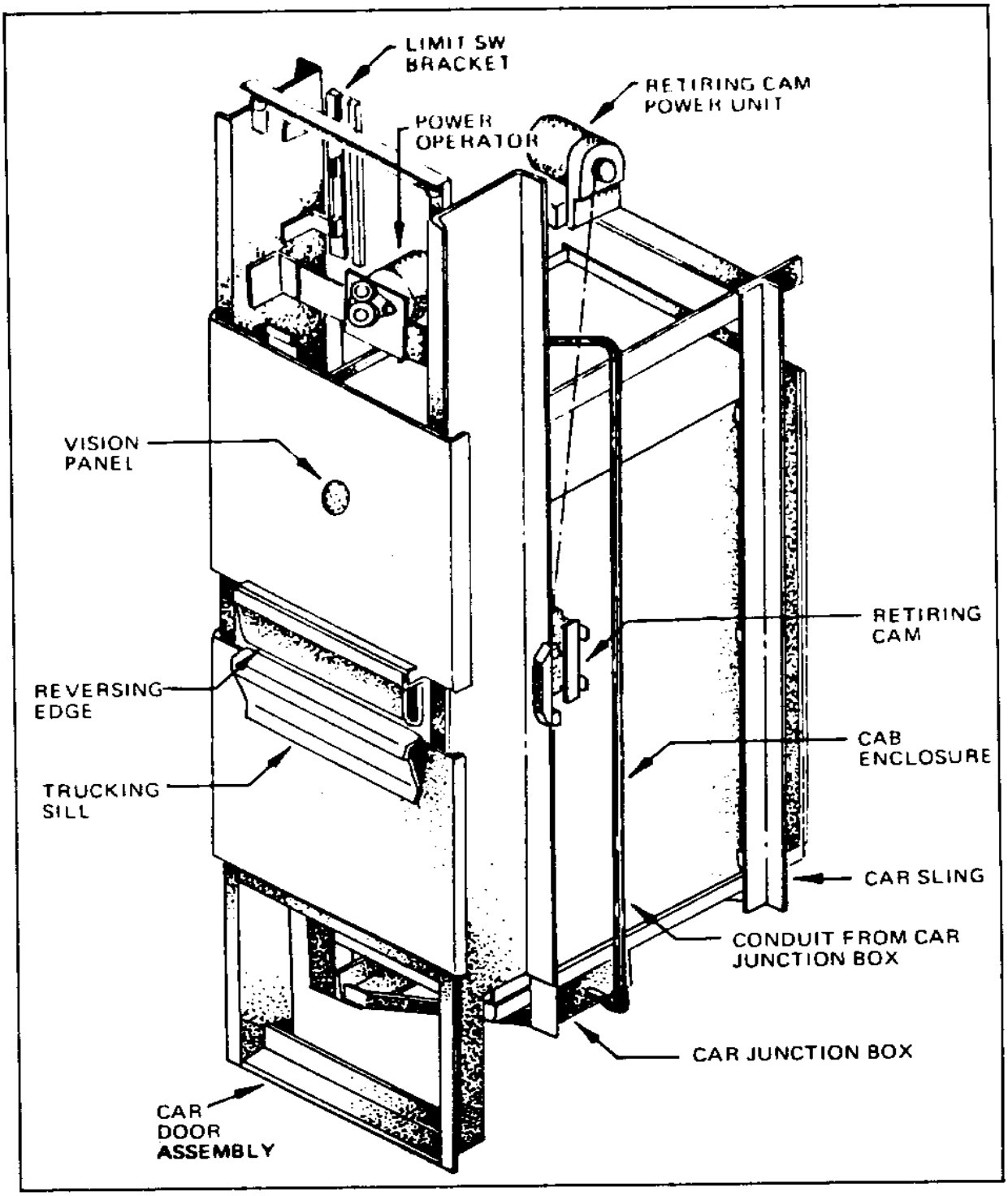

FIGURE 4-8
Typical Dumbwaiter Car And Sling With Power Doors

Door operator equipment if provided, should be closely checked for broken or worn parts. The door operator is subject to much physical abuse because of its constant operation. Leaking or exposed lubrication is usually associated with a developing problem such as deteriorated seals or enlarged openings resulting from wear. The condition should be closely checked. Good housekeeping on the door operator and associated equipment is essential to reduce wear.

4.2.3 Car Enclosure

Determine that the car enclosure is structurally sound and is securely fastened. Determine that capacity plates and any required certificates are posted in the car. Report any evidence of alterations or additions to the car which have materially changed the car weight. Examine lighting fixtures to determine whether they are securely fastened, and have the required protection. Determine that sufficient illumination is provided.

4.2.4 Operating And Control Devices

All operating and signalling devices should be operating properly. The signalling devices are important to the dumbwaiter operation because they are designed to project operating information for the purpose of expediting material traffic movement. Examples of this information are: where is the car in the hoistway; was your call registered; has the car arrival been announced, etc. Also, is the dumbwaiter made to function by applying continuous pressure on the operating buttons, operate the car in each direction by means of the operating buttons or other devices to determine that they do not stick or bind? Are they properly marked? Does the car stop when released? When an automatic leveling device is provided, the accuracy of stopping in both directions of travel should be noted at landings to determine whether any readjustments are necessary. If the dumbwaiter function is automatic, establish calls to operate the car, making stops in both the up and down direction. At each stop, note the relation of the car platform sill to the landing sill. Note any tendency of operating push buttons to stick. When an automatic leveling device is provided, the accuracy of stopping in both directions of travel should be noted at landings to determine whether any readjustments are necessary.

4.2.5 Counterweight

If provided, examine the nuts and cotter pins at the top and bottom of the rods and the frame rods to determine if they are in place and that filler weights are securely held in place. Determine that the counterweight guide shoes are securely fastened to the frame and that the guiding members are not worn excessively.

Also determine if swivel-type or roller-type guide shoes are free to move as intended. Inspect the counterweight suspension fastenings.

4.2.6 Suspension And Fastenings

Examine the condition of the fastenings at the car and machine or counterweight ends to determine if they have been properly made up. The A17.1 Code requires that cars and counterweights, except for dumbwaiters having direct-plunger hydraulic or rack and pinion or screw-type driving machines, shall be suspended by one or more iron or steel wire hoisting ropes or chains secured to the car or counterweight or rope hitch by babbitted sockets, rope clamps, or equally substantial fastenings. Chains where used shall be roller, block, or multiple-link silent type. Wire ropes shall not be lengthened or repaired by splicing. The winding drum ends of car and counterweight ropes or chains shall be secured inside the drum, and there shall be not less than one turn of the rope or chain on the drum when the car or counterweight has reached the extreme limit of its over travel.

4.2.7 Normal Terminal Stopping Devices

Run the car to the top of its travel at slow speed to examine the normal terminal stopping device. on traction dumbwaiters and on most winding drum type installations, this device usually consists of a switch or switches installed in a hoistway actuated by cams on the car. In some cases, however, normal terminal stopping devices of a traction dumbwaiter may be located in the machine room or overhead machinery space and be mechanically connected to and driven by the car. Where the normal terminal stopping device of traction dumbwaiters is so located and the required broken-drive device is located on top of the car, manually open it with the car at rest. The opening of this switch should prevent the car from starting. In the case of some winding drum machine installations, the device is part of an automatic stop-motion switch mounted on and operated directly by the driving machine. Determine that stopping switches and cams are in correct alignment and are securely fastened in place. Also determine the condition of the limit switch rollers, as reduction of the effective roller diameter due to either wear or loss of the tires may interfere with or prevent proper operation of the switch. Excessively worn car guide shoes and worn limit switch rollers, combined, may cause cars to overrun their terminals. If the equipment is in proper condition and sufficient overhead clearance exists, make a test of top normal terminal stopping devices with an empty car at rated speed. Repeat operation with bottom normal terminal stopping devices. On each of these stops, the car should stop at or near the terminal landing.

4.2.8 Car And Counterweight Guide Rails, Rail Fastenings, Car Crossheads, And Car Guiding Members

Examine the guide rails, paying particular attention to the condition of the surfaces and the correct alignment of the joints. Repeated operation of the car safety or improperly adjusted or loose car guide shoes that permit the safety jaws or block to run against the rail surfaces frequently cause serious wear or scoring of the rails and the safety jaws or block. Where, sliding-type guide shoes are used, determine that rails are free of lint and dirt, and are adequately but not excessively lubricated. Where roller guides are used, rails should be clean and dry without lubricant. The A17.1 Code does allow for dumbwaiters the use of wood or wood and metal bolted together for guide rails. It also allows the use of the same set of guides for both car and counterweight and doweled joints. Check the rails to bracket, brackets to building construction, fishplates, crosshead connections, and car guide shoe fastenings to determine whether they are sound and tight, and that there are no missing bolts or guide clips. operate the car at a rated speed from one terminal landing to the other, and determine whether there is excessive or irregular motion of the car that may indicate that the car or counterweight guide rails are not properly aligned. If such motion occurs and it is not due to loose or worn guide shoes or rollers, a recommendation should be made for correction of the rail alignment.

4.2.9 Car Top

The inspector should check to see that the car top an associated equipment have been cleaned. A clean installation eliminates a fire hazard, increases the operating life of the equipment, and assures good operation.

4.2.10 Covers And Guards

Another area to check when examining the car top is that all covers and guards are in place. They are provided to prevent accidental contact with moving devices or exposed electrical components. This protection is not being provided if the cover or guard is not properly mounted in place.

4.2.11 Car-Leveling Devices

Examine fastenings and clearances of car-leveling devices, including cams and vanes located in the hoistway.

4.2.12 Hoistway Junction Box, Car Junction Box, And Traveling Cables

Hoistway and car junction boxes should be securely fastened with covers in place. Examine the supporting means of the cable at the hoistway junction box and also the car junction box. Traveling cables less than 100 ft. in length may be looped around a spool or other supporting member and securely corded, wired, or taped to prevent loosening or separation of the loop. In addition, the loop may be secured by clamps or other similar devices. Also see the National Electrical Code, ANSI/NFPA No. 70, Section 620-41. Table 400.4, Note (6) of the National Electrical Code requires that traveling cables exceeding 100 ft. between supports have steel supporting members running through the center of the cable assembly. Examine the steel supporting member, where attached to the hoistway or car junction box and determine that it is securely fastened. The live load on the steel supporting fillers should hang in the direction of tightening of the supporting bolt or other means of fastening and the dead end taped or clamped to the live end. Examine particularly for any evidence of wear or breaks in the steel supporting fillers which may damage the insulation of the conductors or cause the traveling cable to release, causing strain or breakage to the conductors at the terminal lugs. Where a flexible wire mesh automatic tightening device is used, examine the flexible wire mesh self-tightening grip to be sure that it is securely fastened to its support at the hoistway or car junction box. Examine the eye of the grip attached to the supporting member. When a double eye attachment is used, the eyes should be attached, so that they share the load equally and do not exceed 15 degrees from the axis of the vertical cable. There are basically three types of flexible wire mesh self-tightening grips: closed type, split-laced type, and split-rod type. (See Figure 4-9). Examine the grip where the eye is attached to the wire mesh section for any visible signs of wear or breakage. This point is subject to damage because of flexing of cable. It is recommended that the lower section of the grip be secured to the traveling cable to prevent triggering (total or partial relaxing of the grip) and culminate in milking of the grip (slight movement of grip on the outer section of the traveling cable). Examine for damage caused by the securing means. The triggering of the grip may cause the cable to release, thereby placing strain or breakage on the individual conductors. Milking of the grip may cause wear to the insulation of the traveling cable. Examine the traveling cables for excessive twists or kinks; damage due to chafing; intertwining of multiple cables; clearance from hoistway equipment such as buffers, plungers, brackets, beams, etc. All electrical wiring needs to be checked. Many times wiring and conduit have become damaged when working around the car top or hoistway. This must be constantly inspected to maintain a safe environment.

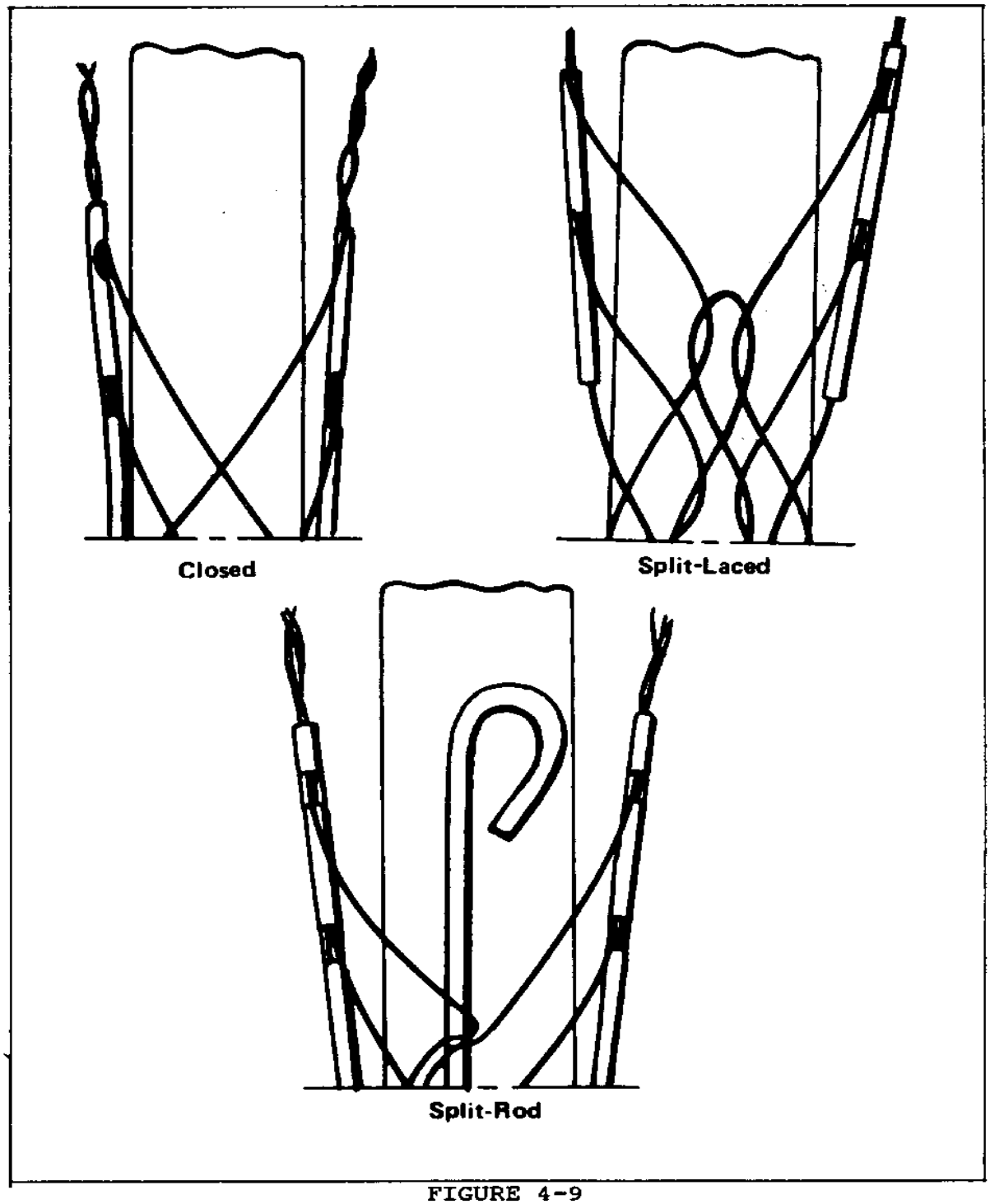

FIGURE 4-9
Typical Flexible Wire Mesh Self Tightening
Traveling Cable Grip

4.2.13 Installation Of Pipes, wiring, And Ducts In Hoistway

Check the hoistway for the installation of pipes, wiring, and ducts, not related to dumbwaiter equipment. These are not permitted by Code.

4.2.14 Hoistway Ventilation

Determine that dumbwaiters installed under the 1981 and later editions of the A17.1 Code are provided with an approved means to prevent the accumulation of smoke and hot gases in case of fire in accordance with the requirements of the building code. For dumb-waiters installed under the 1955 edition through the 1980 supplement of the A17.1 Code, check that 1/3 of the required venting is permanently open or automatically opened by a damper. Portions of the required vents may be closed with glass. This should consist of plain glass, a maximum of 1/8 inch thick. Actually check the means for hoistway ventilation. Many times these have been found blocked either accidentally or intentionally.

4.2.15 Hoistway Housekeeping

The hoistway should be kept clean. Build-up of lint, dirt and trash on beams, ledges, brackets and hoistway entrance sills presents a serious fire hazard. A spark can and does cause a fast moving flash fire.

4.2.16 Pit Housekeeping

Determine whether the pit is clear of refuse, water, or combustible material or is being used for storage. Trash and dirt in the pit is an extreme hazard. Fire potential becomes a great concern. This not only means dirt on the floor, but it also means dirt and dust on the equipment which can be considered a health hazard. Be sure they are kept clean and dry. Check the operation of the pit light.

4.2.17 Pit Stop Switch

Where a pit stop switch is provided, check the type, location, and operation with the car moving in the up direction. open switch and try to move the car. The car should not move when this switch is open.

4.2.18 Car Frame (Sling) And Platform

Examine the portion of the car frame accessible from the pit and determine whether all fastenings, including those between the car frame and the platform are securely in place and that the frame is not distorted. Examine the frame and platform members and their fastenings.

Many cars have been seriously overloaded resulting in the fracture of sling members or other damage. Distorted or straightened members, blistered paint, exuded rust from between members or around bolts or rivets, and oil bubbles on members, may all be clues to a cracked or fractured member. Where examination reveals the possibility of a fracture, a complete check should be made.

4.2.19 Car And Counterweight Bottom Guide Shoes

Examine the car and counterweight guiding members and their fastenings to determine that they are properly secured, aligned, and adjusted, and that they are not worn excessively.

4.2.20 Car And Counterweight Safety Parts

Determine that all moving parts of the safety are lubricated, not corroded, free to operate, and that under ordinary operating conditions, the clearance between the guide rail and each rail gripping face of the safety parts is correct.

4.3 OVERHEAD MACHINERY SPACE AND MACHINE ROOM INSPECTION

4.3.1. Wire Rope Inspection

4.3.1.1 General. Most dumbwaiters in use in Naval facilities are suspended by wire rope. Therefore, we will cover the wire rope inspection. If chain is used, consult the dumbwaiter manufacturer for recommended inspection procedures. For all dumbwaiters, the hoisting ropes must be examined from the machinery space or sheave space or from the hoistway entrances because they cannot ride the car top. It should be noted that it is not possible to describe the inspection procedure for every single type of wire rope installation nor to outline every detail of the inspection procedure. The inspector should use his best judgement in making the inspection and in selecting his location from which a proper examination of the rope can best be made. Figures 4-10 thru 4-13 are provided to show the various roping arrangements which may be encountered.

4.3.1.2 Inspection. Internal breakage of wire ropes is difficult to detect, and consequently, may be a greater hazard than surface wear. The surface of the rope may show little or no wear, but if the rope is bent over a short radius, the individual wires will snap and in extreme cases the rope may be broken by hand. Such failures are more likely to occur where the ropes are lightly loaded and the ratio of sheave diameter to rope diameter is small. The lengths of all wire ropes in a set of suspension ropes, and consequently the rope tensions, should be substantially equal if maximum rope lift and efficiency are to be obtained.

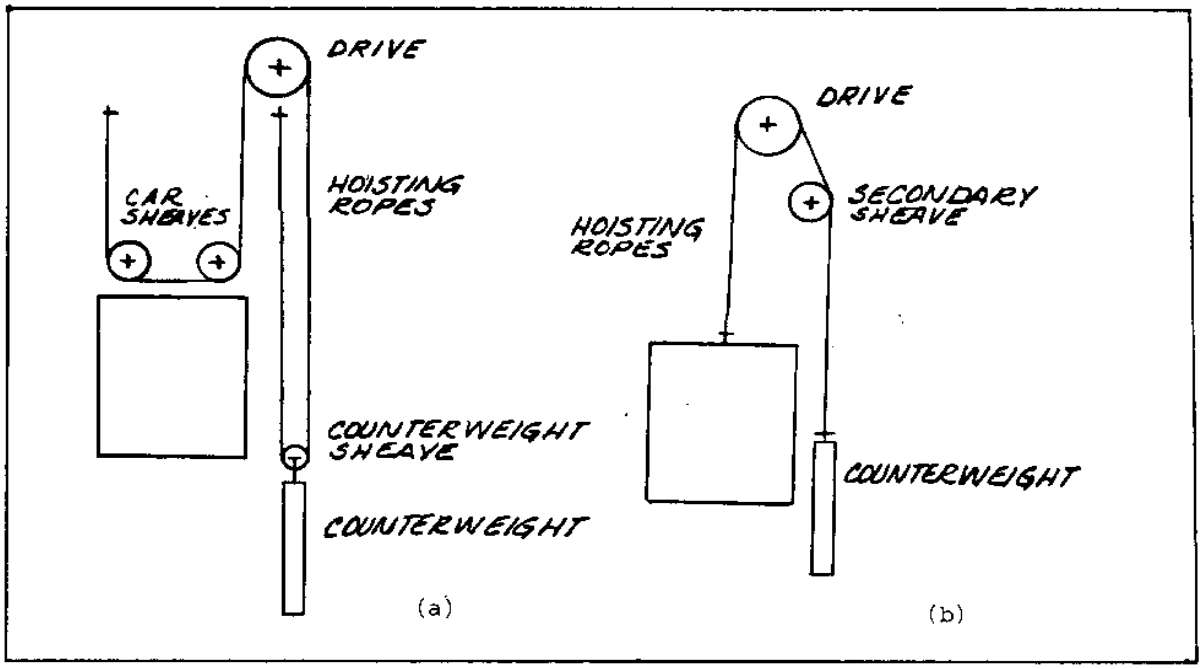

FIGURE 4-10
(a) Roping Arrangement For 2:1 Overhead Traction Machine
(b) Roping Arrangement For 1:1 Overhead Traction Machine

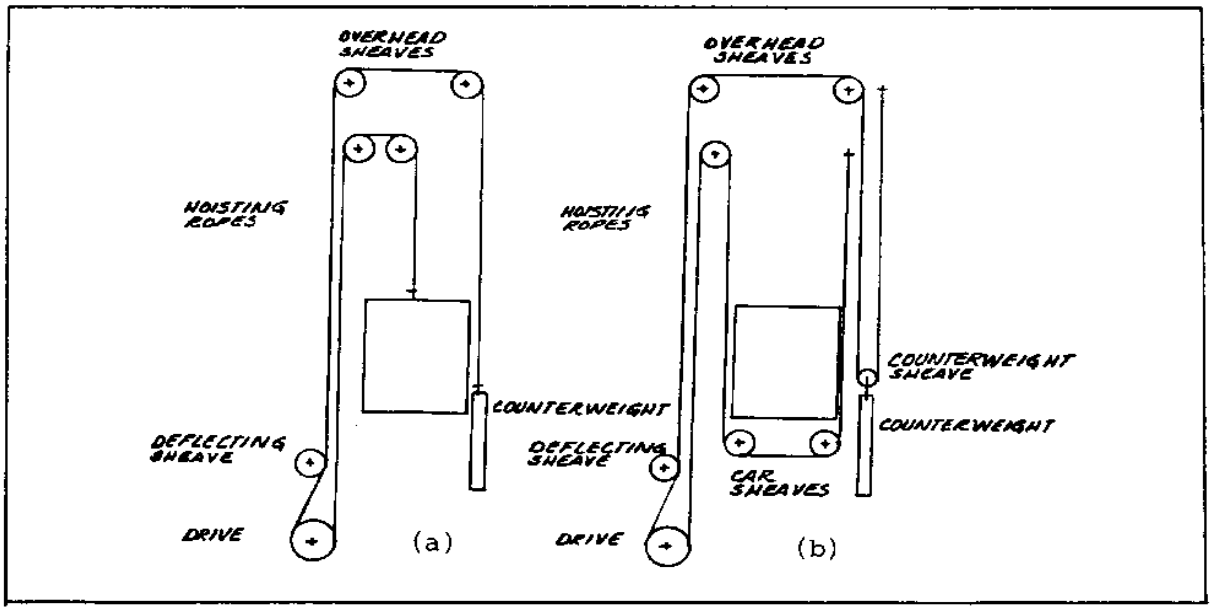

FIGURE 4-11
(a) Roping Arrangement For 1:1 Basement Traction Machine
(b) Roping Arrangement For 2:1 Basement Traction Machine

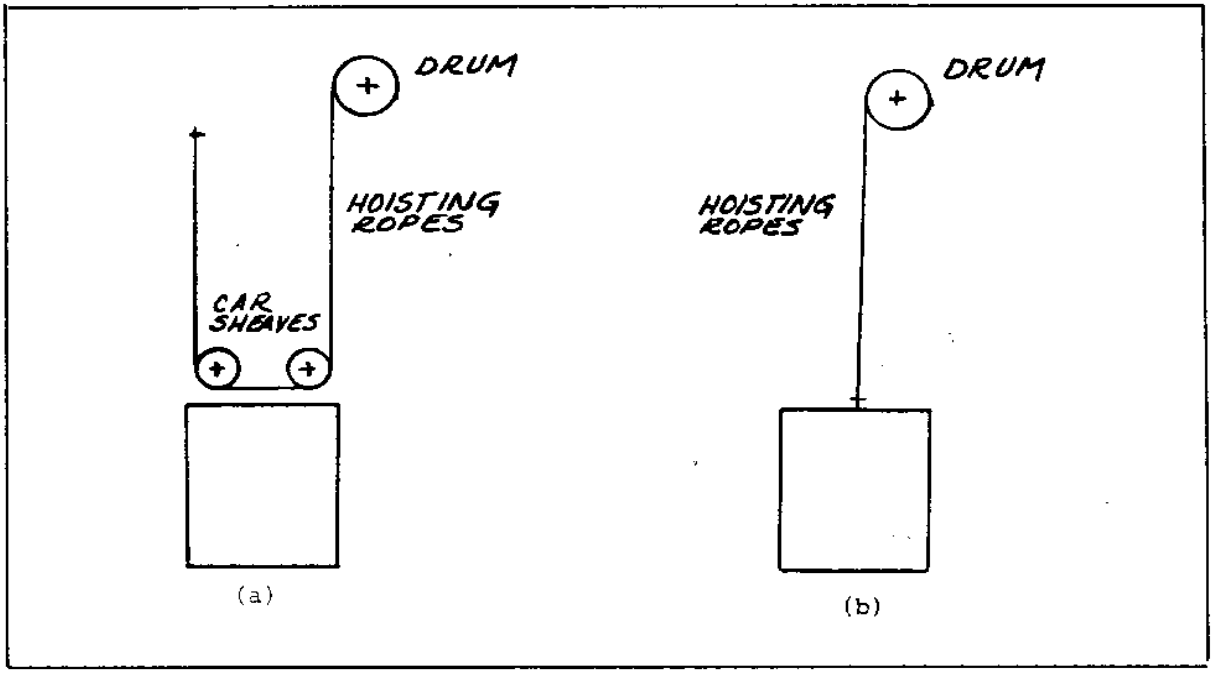

Figure 4-12
(a) Roping Arrangement For 2:1 Overhead Drum Machine
(b) Roping Arrangement For 1:1 Ovarhead Drum Machine

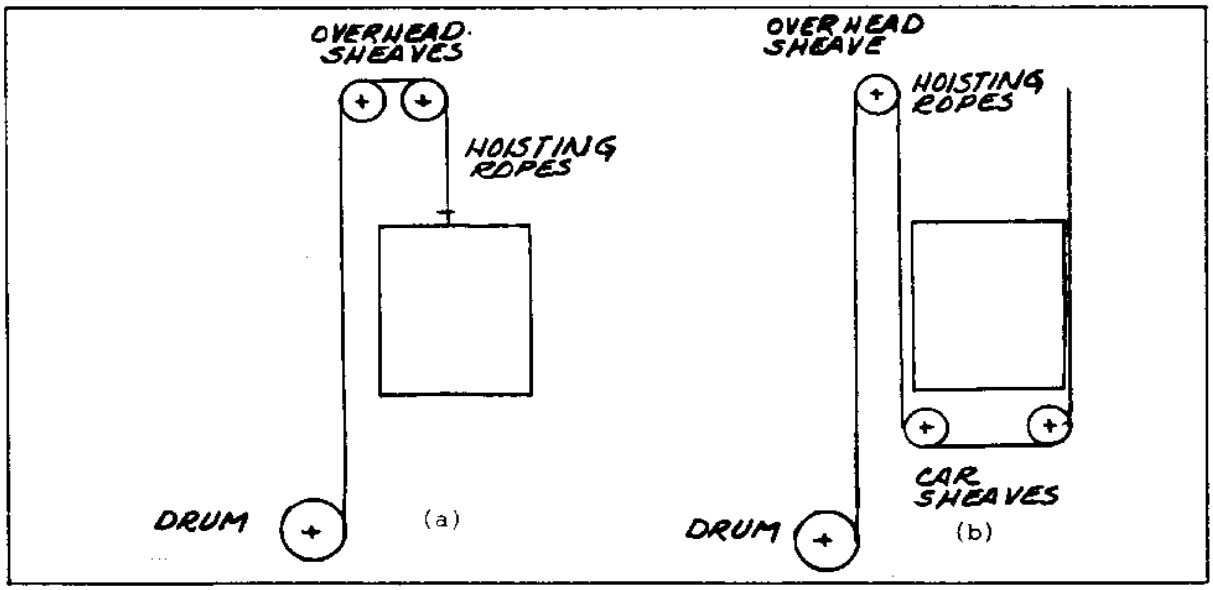

Figure 4-13
(a) Roping Arrangement For 1:1 Basement Drum Machine
(b) Roping Arrangement For 2:1 Basement Drum Machine

If the tensions do not appear to be substantially the same, equalization of the rope lengths should be recommended. If ropes are dirty or over lubricated, a proper inspection may not be possible unless the dirt or excess lubricant is removed.

4.3.1.3 Lubrication. The lubrication of a wire rope applied during its manufacture may not last the full life of the rope and the rope may have to be relubricated periodically. Proper lubrication of suspension ropes will prolong rope life by reducing abrasive action of wire on wire or strand on strand and will retard deterioration of the fiber cores, eliminate distortion of the rope and retard corrosion by providing a moisture repellant coating. As a practical guide to the need for lubrication, a finger wiped in a sheave groove should show a faint smudge and have a slightly oily feel. If this test leaves the finger dry and clean, lubrication is advisable. Excessive or improper lubricants may, in the case of traction elevators, seriously reduce the available traction and cause rope slippage. The lubricants and the amount used should be limited to those supplied or approved by established elevator or wire rope manufacturers. Slide of the ropes during acceleration or retardation may be an indication that the lubrication is excessive. To determine this, it will usually be necessary to observe the ropes where they pass around the driving machine sheave during acceleration and retardation. Some rope creepage is normal. In the case of winding drum machines, excessive lubrication does not create a hazardous condition, and should not interfere with the proper inspection of ropes.

4.3.2 Overhead, Secondary And Deflecting Sheaves

The overhead secondary and deflecting sheaves should be examined and tested with light blows from a hammer. If the resulting from the blows is dull and flat, unlike the ring given by sound metal, the sheave parts should be examined carefully for cracks. If no cracks are visible, it is possible to detect very minute or hair cracks by covering the suspected section with machine oil, allowing it to stand a few minutes, wiping off all surplus oil with a rag or waste, and then coating the part with chalk. The machine oil taken up by the crack will cause a brown stain on the chalk. This indication may be hastened by again tapping the suspected part lightly with a hammer or by having the car make a round trip. Examine the sheaves for worn grooves and determine whether all ropes seat to the same depth in the grooves. Look for evidence of any misalignment of sheaves. Determine whether bearing bolts are secure. Sheave shafts and bearing should be inspected for wear and other defects. Determine that the shafts and bearings are adequately lubricated.

4.3.3 Overhead Beams And Fastenings

Examine overhead beams to determine whether they are securely fastened to supports or firmly embedded in walls. Note any settlement of supports. Examine all exposed bolt fastenings of beams supporting machinery or sheaves.

4.3.4 Overhead Grating Or Platforms

Determine whether any overhead grating or platform has openings of a size in excess of that permitted by the Code. openings in bar type gratings must reject a ball 3/4 inch in diameter. openings in fabricated openwork or perforated or expanded sheet metal must reject a ball 1 inch in diameter.

4.3.5 Traction Driving sheave

4.3.5.1 Inspection Made with Power Off. open the mainline switch and proceed. Hammer-test sheave and spider as previously described. Inspect fastenings for tightness where demountable sheaves are attached to the sheave spider. Note any evidence of lost motion or misalignment of the traction sheaves with other sheaves. Examine the traction sheaves for worn grooves and determine that all ropes seat to the same depth in the grooves. (See Figures 2-9 and 2-10). Particles of metal under rope sheaves are evidence of groove or sheave wear. Traction sheave wear is usually just detected by finding metal particles under the sheave. However, an inspector should watch for the signs that lead to wear before you see the results. The major cause of wear is uneven rope tension. The sheave is designed to carry the load spread over all the ropes. When one is under more tension than the others, this load is transferred to the tighter rope. This can usually be seen by laying a straight edge across the ropes in the drive sheave grooves. All ropes should touch the straight edge. Ropes that do not touch indicate uneven tension or possible sheave wear. occasionally, an inspector will find a sheave with an unused groove or two. However, most of the time it is not used by design, but it never hurts to check the cross head data tag to verify. It is good practice to confirm the data for the actual rope size and construction. occasionally, mistakes are found. Changes in the type or size of the specified hoist ropes will change the rope to sheave traction factor resulting in either insufficient traction or excessive traction. Either condition can result in dangerous consequences. Insufficient traction results in the drive machine losing control of the car and counterweight. This could result in an overhauling load from either side causing a run away condition. Too much traction could result in the machine lifting either the car or counterweight if the other were to stop and the machine continued to run. The traction factor is extremely critical to safe dumbwaiter operation.

4.3.5.2 Inspection Made with Power On. Close the mainline switch and proceed. Excessive lubrication of the wire ropes or wear of the sheave grooves may result in reduction of traction. Test traction by marking the ropes and sheave with a chalk line, then operate the empty car in the up direction and stop it by opening the emergency stop switch. Return the car to the originating floor and observe. Any material reduction of traction may be noted by observing slippage between ropes and traction sheaves.

4.3.6 Guards For Exposed Equipment

With the mainline switch closed, check exposed gears, sprockets, tape or rope sheaves or drums of selectors, floor controllers or signal machines, and the ropes, chains, or tapes for driving them, in machine rooms and secondary machinery spaces to determine that the required guards are in place. Many times guards are removed to service equipment and in haste are not returned to their proper place. A guard sitting off to the side is not doing its job and could result in a painful accident.

4.3.7 Winding Drum Machine

The A17.1 Code allows the use of winding drum machines for dumbwaiter applications. See Figure 4-14 for an example of a typical winding drum dumbwaiter machine. open the mainline switch and examine hoisting and counterweight rope fastenings in the drum. Note that there would be at least one turn of rope on the drum if the car or counterweight were resting on its fully compressed buffer. Visually examine and hammer-test the drum for defects or cracks, as previously described.

4.3.8 Driving Machine Terminal-Stopping Switches

The normal terminal stopping devices for winding drum machines are required to consist of switches located in the hoistway or on the car, and operated by the movement of the car. Where the normal terminal stopping switches are located on and operated by the driving machine, they should be inspected and where possible, operated by hand to determine that the switch and its contacts are in proper operating condition. Determine that the switch contacts, particularly any motor mainline contacts provided, are not burned or worn excessively, and that all gears, chains, or wire ropes and pulleys provided for their operation operate as intended and are not worn excessively. Close the mainline switch and run the empty car to each terminal landing until stopped by the machine terminal stopping switch. Note whether the switch stops the car near the landing. Determine that at the bottom terminal landing with no load in the car, allowance has been made for the greater slide that could occur when the rated load is in the car.

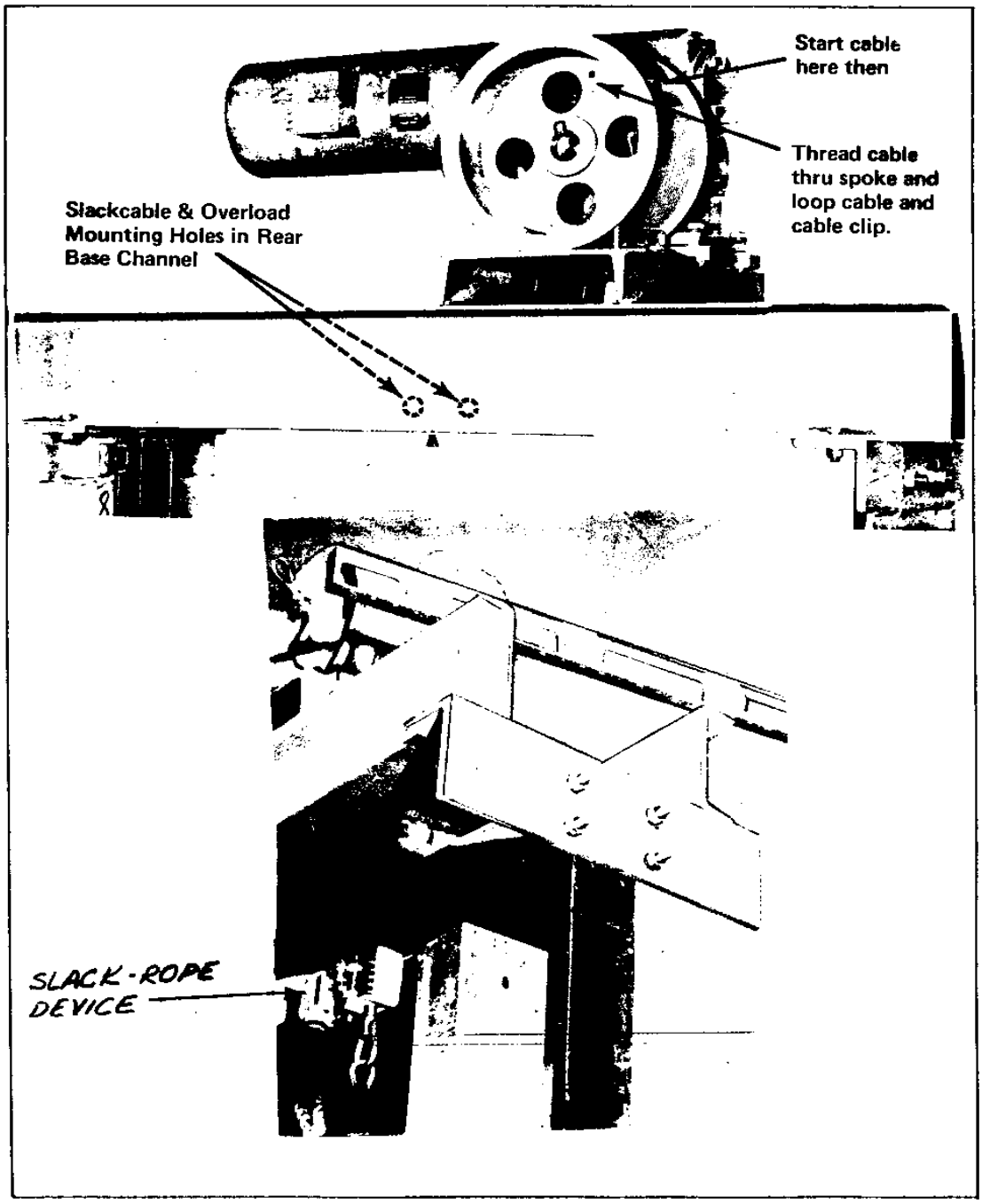

FIGURE 4-14
Typical Overhead Winding Drum Machine

4.3.9 Slack-Rope Device

Slack-rope devices are required only for winding-drum machines. The device is arranged to monitor the loss of tension in the hoistway ropes. Most are located at the hoist rope termination, (See Figure 4-14) however, some devices are located at the hoist machine. Electric switches used with slack-rope devices should be of the enclosed, manually reset type and should be tested by tripping the device by hand with the machine running. This should stop the car. Where the slack-rope device cannot be operated by hand, test at intervals of not longer than 12 months by lowering the car onto a suitable support or supports placed in the pit. Determine that the tension in the hoisting ropes decreases sufficiently to operate the device and stop the machine. Determine that there is no interference with the free and complete movement of the slack-rope device for the hoisting ropes and the detector bars are set as close as possible to the driving-machine drum in order to open the switch with a minimum of slack rope.

4.3.10 Normal Terminal Stopping Switches

In some cases, the normal terminal stopping switches are located in the machine room and operated by a rope, tape, or chain attached to the car. These switches should be examined as previously outlined.

4.3.11 Gears And Bearings

4.3.11.1 Inspection Made with Power On. Close the mainline switch and proceed. Have the dumbwaiter operated in each direction, making frequent stops. observe if there is any excessive play or backlash in the bearings or gearing. Unusual noise or play is usually an indication of gear or thrust trouble, or damage to bearing liners, rollers, or balls. Bearing problems are also detected by sound and/or heat. Examine all bearings and gears for excessive lost motion or wear. Determine whether bearings and gears are lubricated and that oil rings, chains, or other methods of feeding, operate freely. The level of oil in the reservoirs should be checked -and any leakage of oil noted.

4.3.11.2 Inspection Made with Power Off. Open the mainline switch and proceed. Examine the oil in the gear case to determine whether it is free of metallic particles or other foreign substances. Check the oil level. Visually check the gear for excessive wear. Gear problems are detected by examining the wear pattern on the gear. This will show that! the gear is not properly aligned with the worm causing the point of contact to be not in the proper position or that the gear is bottoming or contacting the worm shaft. Excessive heat damage, most likely caused by low oil or break down of oil, can also be detected. It is indicated by pock marks in the face of the gear tooth or teeth. They resemble casting defect marks.

4.3.12 Driving-Machine Motor

4.3.12.1 Inspection Made with Power On. Close the mainline switch and proceed. Have the dumbwaiter operated in each direction making frequent stops, and observe the operation of the motor and brake. Commutators or slip rings, where provided, should be observed for excessive sparking or brush chatter. Inspect bearings as previously described. Inspect all motor fastening bolts to determine whether they are in place and tight.

4.3.12.2 Inspection Made with Power Off. Open the mainline switch and examine brush holders, commutators or slip rings. Determine the condition of the brush holders and brushes and whether any brush is stuck in its holder or is worn to the extent that either the brush holder or the metal connector on the brush could touch the commutator or slip ring. If sparking or chattering was noticed when the machine was running, check the brush spring pressure. Examine the commutator (or slip rings) to determine if it is burned, pitted, grooved, or scored, and is clean and free from oil. Also check the commutators for high mica conditions. (See Figure 2-13) Become very familiar with these signs and be constantly on the look out for them. Dumbwaiter performance is directly related to good electrical continuity through the commutator or slip rings. Check the slots of the commutator for any accumulation of carbon, copper dust, oil, or other substances. Check exposed armature and field terminal connections to see that they are tight. Special attention should be given to the shunt field connections of DC motors. Loose connections here could result in a runaway condition. connections not properly made may result in poor electrical conduction and points of resistance. This condition creates heat. Examine the leads to be sure they are not broken or their insulation is not cracked or broken. Improper adjustments can force motor winding to carry more current, which produces heat, which will cause insulation to deteriorate. Check to see that the motor windings are free of oil, dust, or lint deposits. Accumulations restrict cooling air circulation causing heat build-ups, which result in poor performance, insulation damage, and possibly fire.

4.3.13 Driving-Machine Brake

4.3.13.1 Inspection Made with the Power On. Close the mainline switch and proceed. Run the car and observe the operation of the brake. The brake should not chatter. It may apply on or before the completion of the slowdown and leveling operation. Check to see that the brake is automatically applied on normal stops. The clearance between the brake shoe and the brake drum when the car is running should not be greater than necessary to permit free running.

Examine the brake pins to determine whether they are properly lubricated and not frozen, and that the cotter pins are in place and open. Note any harsh and abrupt brake action. Motors of motor-operated brakes should be examined as described previously. In addition to the above, on mechanical brake installations, note that the operation of the brake actuating device releases the brake only when power is applied in the machine. Many control systems, by design, stop the elevator electrically when it reaches the floor, then allows the brake to set. This is done to prevent a bump on stopping, which is caused when the brake sets. Brake operation should be checked, where applicable, to see that this feature is working properly.

4.3.13.2 Inspection Made with the Power Off. Open the mainline switch and proceed. Examine the brake and drum to determine that the brake linings are free of oil and whether there is any scoring of the drum. The design of the actuating linkage of some brakes is such that a single unit or link is used both to govern the spring pressure applying the brake shoes when the brake applies and the amount of clearance between the brake shoes and the brake drum when the brake is released. With this type of design, it is possible to improperly adjust the releasing feature so that it will prevent the brake application. The adjustment of this type of brake should be examined to determine that the adjustment is such that the brake shoes are not prevented from properly applying and that there is sufficient margin in the adjustment for the brake lining wear. Be sure to check the oil level of oil immersed coil type brakes. Also, the brake coil leads, connections, and windings should be examined to check insulation conditions and physical connections. In addition, many brakes have electrical contacts that are used in various control functions. These should be checked to assure proper contact operation, insulation on wire and contacts, and condition of connections.

4.3.14 Motor-Generator Sets Used With Generator-Field Control

Motor-Generator sets and exciters which are part of the dumbwaiter control system should operate smoothly without excessive noise or vibration and should be inspected as previously described for a driving machine motor. Motor-Generator sets and rectifying units used to convert AC to DC for the operation of one or more dumbwaiters, but which are not one of the units of the generator-field control system, are not considered to be part of the dumbwaiter equipment.

4.3.15 Control Equipment

The following inspection procedure applies to all the control mechanisms, including starting panels for motor-generator sets which are part of the dumbwaiter control system, signal panels, dumbwaiter controller panels, dispatching panels, selectors, etc.

A good preventive maintenance program on the control equipment will greatly reduce shut downs. Many controllers have pieces of rotating equipment that are part of the controller and that are applied in various functions. These should not be overlooked. They should be given the same type of inspection as the larger rotating equipment.

4.3.15.1 Inspection Made with Power Off. Open the mainline switch and examine all relays, switches, contactors, control circuit rectifiers, transformers, capacitors, reactors, vacuum tubes, etc., And note:

a. Any excessively worn or burned contacts with broken connectors, broken or cracked resistance grids or resistance tubes.

b. Any fuses which are shorted with wire, solder or metal strips.

c. Whether the equipment is clean.

d. Any accumulation of combustible materials, especially on resistance grids or wires, or on control circuit rectifiers (a common cause of fire).

e. Whether contacts of reverse-phase relay, where provided, are open.

f. Excessively worn pin hinges on relays or contactors.

4.3.15.2 Inspections Made with Power On. Close the mainline switch and proceed. Observe the operation of the control equipment when the dumbwaiter is run in each direction. Note any arcing of contacts, excessive heating of coils or resistances, and misalignment of relays, contactors, and switches. Dumbwaiter performance must also be checked and compared with previous test data and criteria. This would include door operation, acceleration, deceleration, and floor stopping accuracy. This will determine if the system is operating at its full potential or if adjustments are needed to obtain a system operating at design capabilities. Unusual noises should also be noted.

4.3.16 Machine Room

Check the machine room for the following:

a. Adequate lighting.

b. Housekeeping and the presence of any flammable liquids (flash point less than 110 degrees F) or materials not necessary for the operation and maintenance of the elevator.

c. Check that adequate ventilation by natural or mechanical means has been provided to insure safe and normal operation of the dumbwaiter. Check local codes to see that machine room ventilation is in compliance. With the newer type of control equipment, ventilation is even more critical.

d. Fire extinguisher, proper class, mounting, and maintenance record tag. They should be properly mounted and maintained.

e. Machine rooms and machinery spaces are vulnerable areas.

They are assumed to be great storage areas. Navy policy is that they are not to be used for storage of non-elevator related items. Absolutely no flammable items are permitted. It is the responsibility of the inspector to insure proper use of these areas.

4.3.17 Machine Room Access

Check that a permanent, safe, and convenient means of access to machine rooms and machinery spaces have been provided and maintained. Check stairways and ladders to see that they are stable and secure. Also check to see that the access is not infringed on by building changes. A prime example would be if air conditioning were added and the contractor had installed a large duct right through the access right of way requiring the person who enters the machine room to crawl under the duct. The access door is required to be self-closing and self-locking and is to be maintained in the closed position. In addition, Navy policy is that the machine rooms must have controlled access and areas to be secured by lock and key or combination locks.

CHAPTER 5

LIFTS WITH AUTOMATIC TRANSFER DEVICES

5.1 INTRODUCTION

NOTE: Paragraphs identified with a vertical line in the left margin are inspections that should be made by certified Vertical Transportation Equipment Inspectors only.

5.1.1 Scope

The inspection procedure of lifts with automatic transfer devices included in this chapter is not only an inspection of all safety related functions, but also an inspection to determine the condition of the equipment and identify areas that need improvement. Proper maintenance is needed to keep the lift operating. When preventive maintenance is lacking, shut downs will occur. Chapters 2, 3, and 4 of this manual should be used as the basis of inspecting the lifting equipment associated with these installations. In this chapter we will identify the specific differences between these devices and the equipment included in the previous chapters and address the inspection procedures to be followed when inspecting such equipment. It is intended that each noted section should be reviewed as it is identified and suggested procedures followed. The maintenance and performance considerations of the inspection will be addressed in the following text.

5.1.2 Application

There are many varieties of lifts with automatic transfer devices and the following are descriptions of the commonly used types.

5.1.2.1 Cart Lift. This type is mounted on a small floor stopping elevator or dumbwaiter and acts to pull the cart from the floor landing onto the lift or to push the cart from the lift onto the floor landing. (See Figure 5-1). The sequence is automatic in that the cart is placed in a position in front of the lift and a call or send signal is registered. Lift operation consists of automatic opening of doors, extension of the transfer device, and engaging of the coupler on the underside of the cart with the mating coupler of the transfer device. The transfer device retracts pulling the cart into the lift, the doors automatically close, and the lift travels to the destination. When the reverse cycle takes place, the doors open, the transfer device pushes the cart out, disengages the coupler, retracts, the doors close, and the lift is free to move to the next demand.

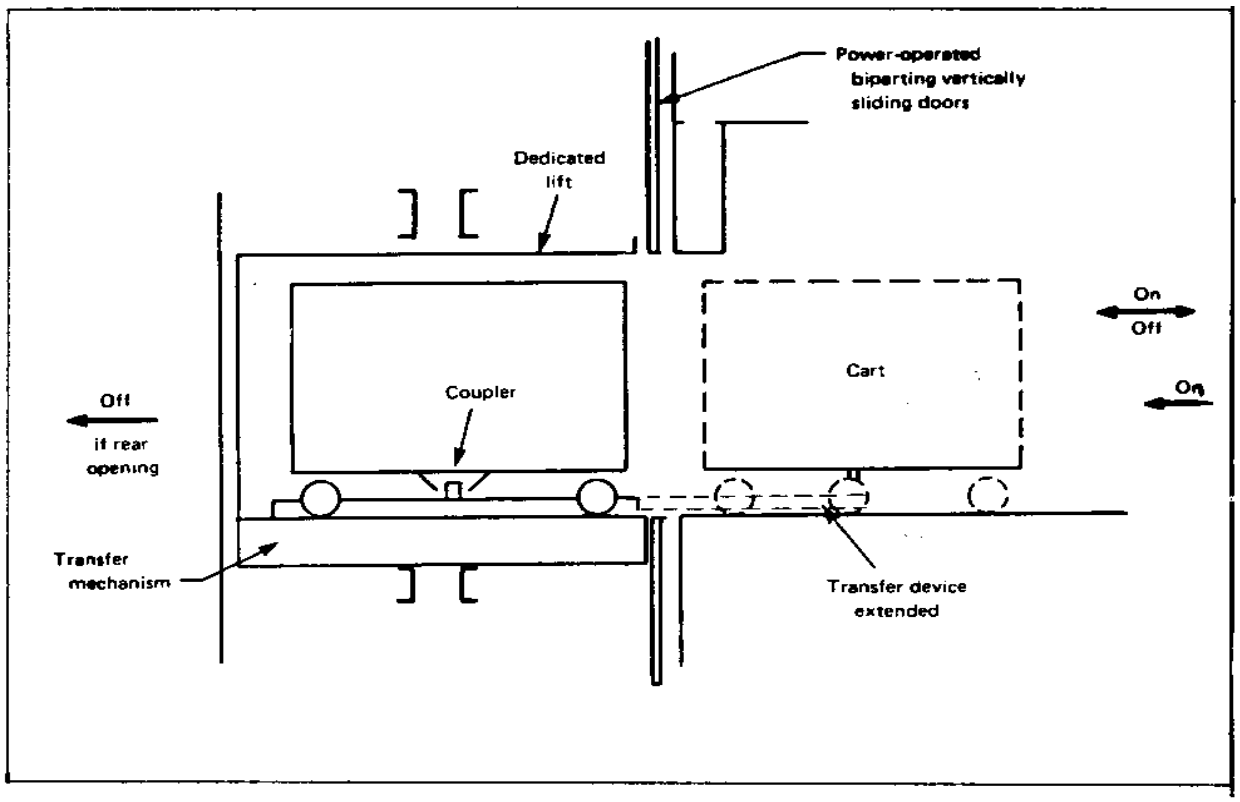

FIGURE 5-1
Typical Cart Lift

An indexing type floor conveyor may also be installed to allow the queueing of carts at a landing. The carts are then automatically moved into position to be loaded, each cart having an encoded address to indicate the destination.

5.1.2.2 Tote Box Lift. This type is a small version of the cart lift, utilizing a counter stopping dumbwaiter which provides for the handling of tote boxes. (See Figure 5-2). Boxes are placed on a table in front of the lift and the call button is operated. The lift arrives, opens its doors, the transfer mechanism operates to pull a box into the lift, the doors close, and the lift travels to another landing. Ejection is the reverse process.

5.1.2.3 Overhead Chain Conveyor Lift. Carriers on a power and free chain conveyor system are driven by the power chain to a position in front of the lift where a destination signal calls the lift. (See Figure 5-3). The door opens and a transfer device, either on the lift or at the landing, operates to transfer the carrier onto the lift which has a mating power conveyor in the overhead. The door closes and the lift travels. Ejection is in a similar manner. The carrier is equipped with a fastening device which engages a cart and generally by means of an inclined power chain which lifts the cart off the floor. This type of device can also be used with a gravity transfer on and off

the lift.

5.1.2.4 In-Floor Tow Chain Conveyor Lift. Carts are propelled along the floor by a powered tow chain engaged by a pin on the cart through a continuous slot in the floor. (See.Figure 5-4). At the entrance to the lift, the cart is released from the floor tow chain and a signalling device calls the lift. The lift doors open and a transfer mechanism in the floor of the lift extends to engage the pin on the cart and pulls the cart into the lift where it is engaged with a lift tow chain. Ejection is in the reverse order through a rear lift entrance. The cart is then picked up by the floor tow chain and moved to its destination.

5.1.2.5 Pallet Lift. Loaded or empty pallets are automatically loaded onto the lift by the use of a powered roller conveyor or conveyors at the landing and powered roller conveyor on the lift. (See Figure 5-5). The landing conveyor may be an indexing type where a number of pallets are rolled one at a time into position in front of the lift; the lift automatically opens its doors, and both the last section of the floor conveyor and the first section of the lift conveyor are actuated. When the pallet reached a fixed position on the lift, the doors close, the lift travels, and the conveyor operates at the destination to transfer the pallets onto a receiving floor conveyor or conveyors which may be powered or nonpowered. They may be arranged to carry more than one pallet at a time.

5.1.2.6 Robot Vehicle Lift. A self-propelled cart is used to carry a load and/or pull a trailer carrying a load. (See Figure 5-6). The cart moves at about 1 mi/hr following a guide path on or in the floor. The cart is equipped with a designation coding device which will signal an elevator or lift, wait, and move onto the elevator or lift when it arrives. Further signals will indicate the designation and initiate door closing. Variations have included a single cart operating onto a passenger type elevator shared with pedestrians and equipped for self-propelled cart operation and freight type elevators accommodating a self-propelled tractor pulling a number of loaded trailers.

5.1.3 Performance Criteria

As was stated previously, the purpose of this type of inspection is to review the entire lift installation, to include measuring the operation of specific elements of the lift system against standards which have been established by engineering practice common to the lift industry.

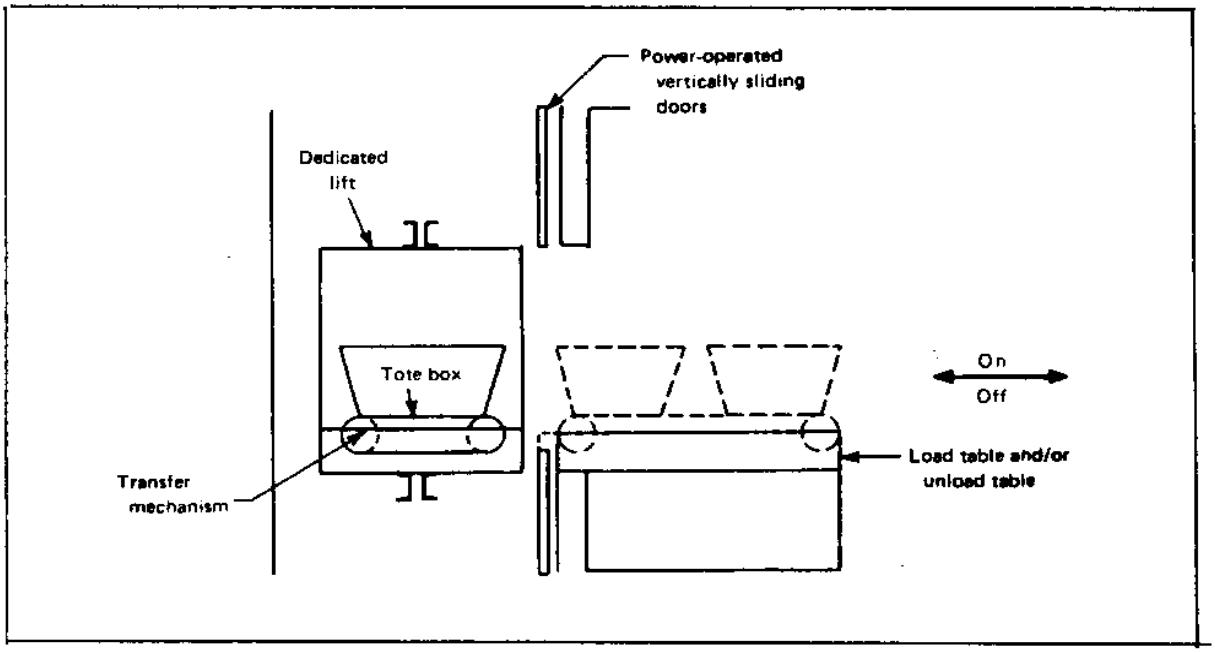

FIGURE 5-2
Typical Tote Box Lift

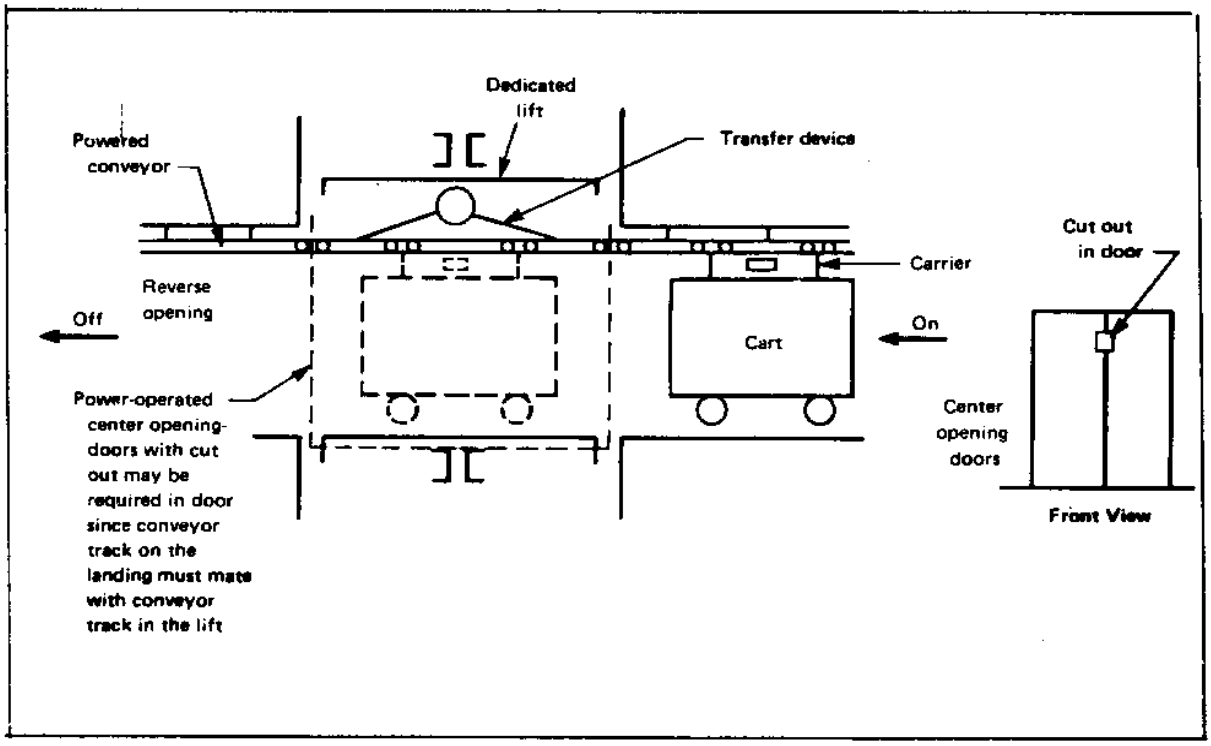

FIGURE 5-3
Typical Overhead Chain Conveyor Lift

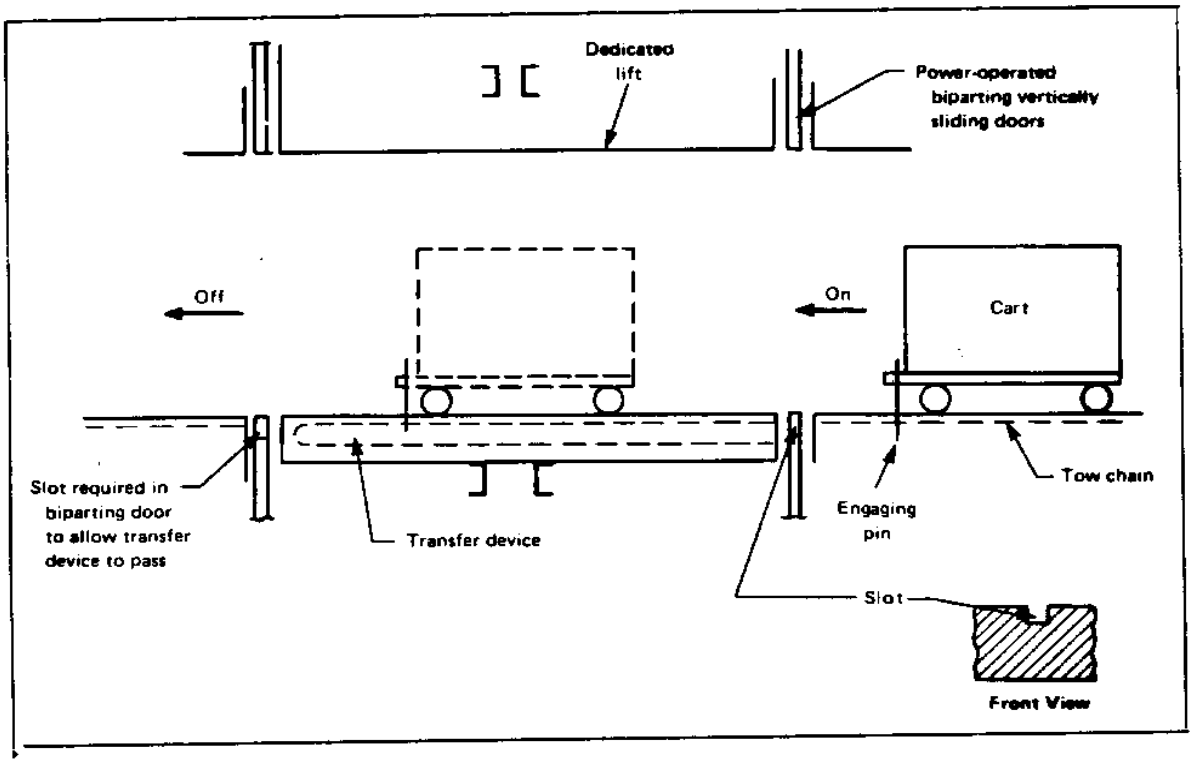

FIGURE 5-4
Typical In Floor Tow Chain Conveyor Lift

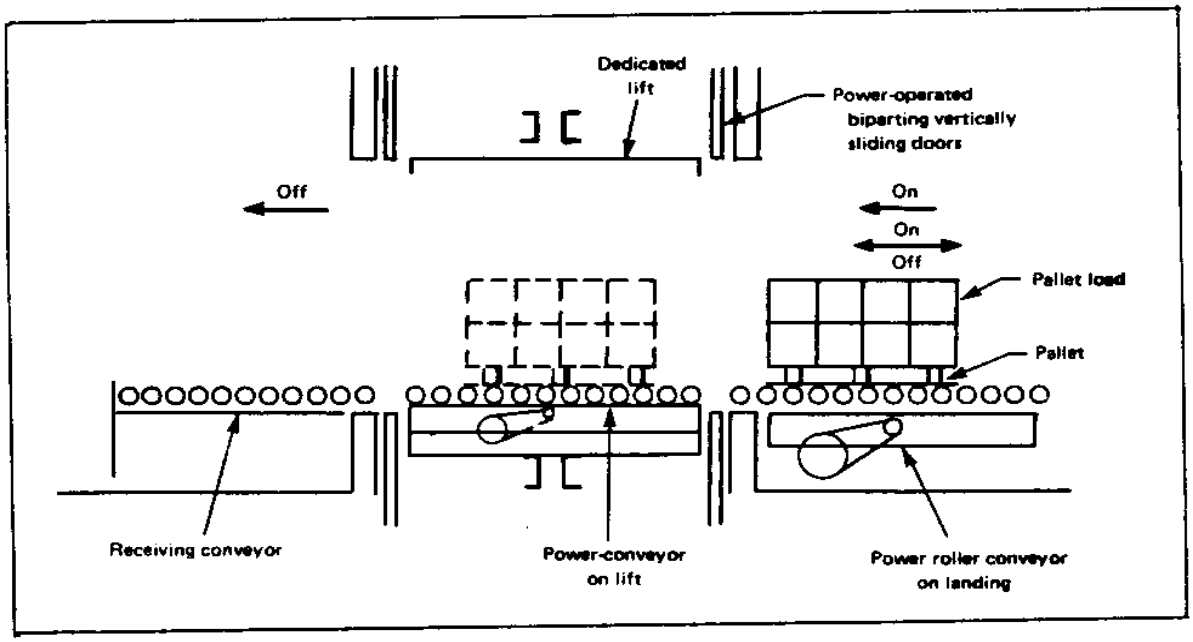

FIGURE 5-5
Typical Pallet LIft

The components of the system selected for testing are those most directly related to safe operation of the lift and the overall installation, although some items, such as speed of the lift and door open and close times are related to the efficiency of the operation and grade of service provided. Maintaining design performance in these systems is even more critical than associated with previously described systems. These units are quite often an integral part of a distribution system where-the entire system is programmed to function as a unit to accomplish a common purpose. If the lift functions are not operating at design values, then the whole system is in trouble. The following is an explanation of the areas that should be tested and criteria to use for evaluating this performance.

5.1.3.1 Lift Speed. Lift operating speed is measured with a tachometer (or stop watch) while the lift makes a full run through the hoistway with no load in the car. Operating speed should be maintained at a level of plus or minus 5% of the rated speed (to be found on the governor rating plate or the crosshead on the car) under any load condition in both directions of travel. The 5% figure is reasonable tolerance for most traction lift equipment. However, consideration must be given to the actual equipment being examined.

5.1.3.2 Door Opening Time. Door opening time is measured from the instant the doors begin to open until the doors are fully open. Door opening time should be as fast as possible to provide efficient lift service while providing smooth operation and long equipment life. It is recommended that door open times be recorded and compared from inspection to inspection to insure continued performance.

5.1.3.3 Door Closing Time. Door closing time is measured from the instant the doors begin to close until the doors are fully closed. on elevators that are used at times to transport Robot Vehicles, the A17.1 Code limits door closing time when the device is used to transport people by defining the level of kinetic energy generated during the door closing operation. When a lift is used to transport materials, the closing time can be as fast as possible while providing smooth operation and long equipment life. It is recommended that door closing time be recorded and compared from inspection to inspection to measure continued performance.

5.1.3.4 Performance Time (floor to floor times). Performance time is measured from the instant the doors begin to close on one floor until the lift is stopped level with the next successive floor, up or down, with the car doors fully open. Calculated reasonable standard times for various types of elevators are shown in Table 5-1.

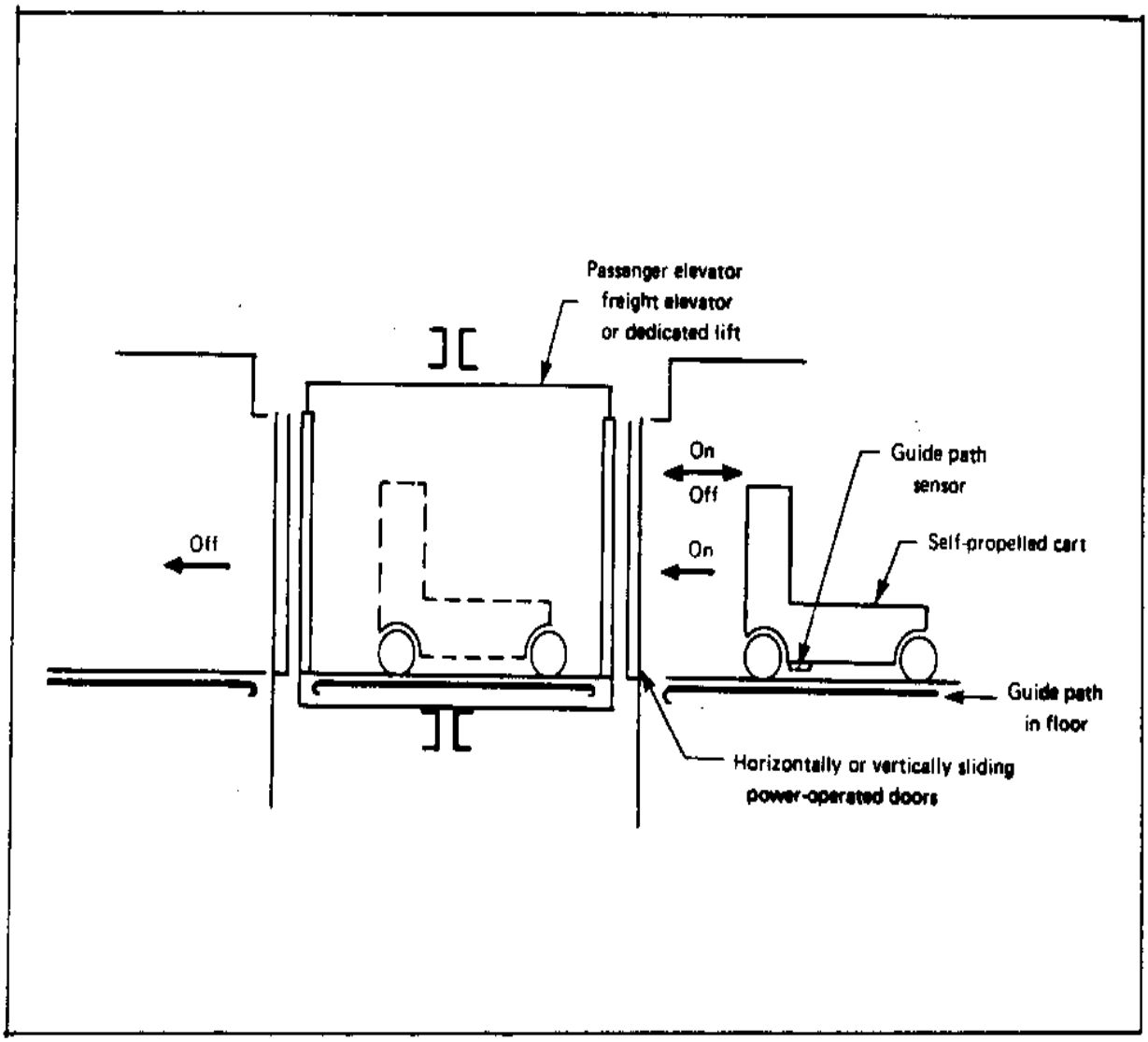

FIGURE 5-6
Typical Robot Vehicle Lift

5.1.3.5 Acceleration, Deceleration, Floor Stopping and Noise. The car should stop at each landing at a point no greater than 3/8" above or below the floor. In some cases stopping accuracy may need to be more critical because of transfer requirements. Manufacturer's recommendations should be reviewed and applied when more stringent than 3/8" tolerance. Acceleration and deceleration should be smooth with no noticeable "Steps" to attain or reduce speed. Stopping should be smooth. No unusual noises should be heard.

TABLE 5-1
TRACTION ELEVATORS
FLOOR-TO-FLOOR PERFORMANCE TIME SELECTION
(SECONDS = + 0.2)

SPEED (F.P.M.)	RUN TIME	ADJUSTMENT PER FOOT OF TRAVEL FROM 12'-0" STANDARD (SECONDS)
50	17.0	1.2
75	13.0	0.8
100	11.5	0.6
125	10.5	0.5
150	9.5	0.4
200	6.5	0.3
250	6.2	0.25
300	5.9	0.2
350	5.6	0.2
500	4.5	0.18
700	4.5	0.18
800	4.5	0.180
1000	4.5	0.18
1200	4.5	0.18

5.2 INSIDE THE CAR INSPECTION

5.2.1 Scope

Because the material lift is not allowed to carry passengers, requirements for the inside of the car have several modifications to the requirements previously discussed for electric and hydraulic elevators. The text will address only those areas of change. All other items will be inspected in accordance with the previous requirements.

5.2.2 Operating And Signalling Devices

Car operating devices are not allowed unless required for maintenance purposes. If required, controls shall be under locked covered or key-operated switches. Emergency stop switches are

required to stop the lift, door operation and transfer operation. Check the location of the switch to see that it is accessible from the landing. Stop switches are also required on dumbwaiters.

To determine floor-to-floor performance, first find rated speed in the 1st column. Select standard run time performance time from the adjacent column. Then add this value to the previously recorded door open and door close time. Adjust this time by adding or subtracting appropriate amount per foot of travel over or under standard floor height of 12-0". The result will be the floor-to-floor performance time.

5.2.3 Car Enclosure

These cars do not require a platform. The transfer device may serve as the platform. (See Figure 5-7). Open areas must be covered with either solid or open material. open material shall reject a 2" diameter ball. Top exits are not required and the enclosure can also be of grill or perforated construction. It must be full height to at least 6 feet high. Cars must have a sign stating "NO PERSONS PERMITTED".

5.2.4 Car Doors

Car doors are not required. The use is usually dependent on the type of transfer device being used. If provided, the gate must be the full height, up to 6 feet.

5.3 OUTSIDE THE CAR INSPECTION

5.3.1 Hoistway Entrances

Lifts with automatic transfer devices are required to have power-operated horizontal slide, power operated vertical slide biparting or power operated vertical slide doors. Cutouts are permitted in doors to accommodate the transfer device. Be sure to check that shielding is provided to close the opening if the transfer device does not substantially fill the opening. If the access to the entrance is in a restricted access area and blocked by a permanently mounted floor-mounted transfer device, the doors need not be closed and locked until the car is 18" away from the landing. Also, if the entrance is blocked, a stop switch is required at the entrance in addition to the one in the car.

5.3.2 Non-Restricted Area

Check the kinetic energy of the discharging load to see that it does not exceed 30 foot pounds and the speed does not exceed 1-1/2 feet per second. A flashing light or gong is required to actuate when the door opens prior to transfer. Check that there is no less than a 4 foot clearance

at the end of the transferred load. The area must be protected by railing, mechanical or electrical devices that prevent transfer or the unload area must be raised at least 18" above the floor.

5.3.3 Feeding Conveyors

As shown in section 1 of this Chapter, there are different types of feeding conveyors that can be used in conjunction with these lifts. Refer to the requirements of Chapter 15 for making inspections of these devices.

5.4 CAR TOP INSPECTION

5.4.1 Car Top

A top-of-car operating device is required on lifts where gross load exceeds 1500 pounds.

5.4.2 Sill Clearance

The clearance between car and hoistway sills shall not exceed 5 inches. The additional clearance is allowed for some transfer device designs. The transfer device shall not project beyond the landing sill line unless solid guides are used. Be sure to check guide shoe clearances. Any appreciable wear will result in problems.

5.5 PIT INSPECTION

5.5.1 Buffers

Spring buffers may be used up to and including 300 feet per minute lifts. Strokes of both spring and oil buffers have been reduced in comparison with the required stroke distances of buffers for passenger and freight elevators. The reason for the difference is the fact people do not ride the equipment.

5.5.2 Safety Devices

The requirement on safety devices is also changed. Broken or slack rope safeties are allowed for speeds of 100 feet per minute or less and type A safeties are allowed for speeds of 200 feet per minute or less. Safeties are required on dumbwaiters where the gross load exceeds 1500 pounds.

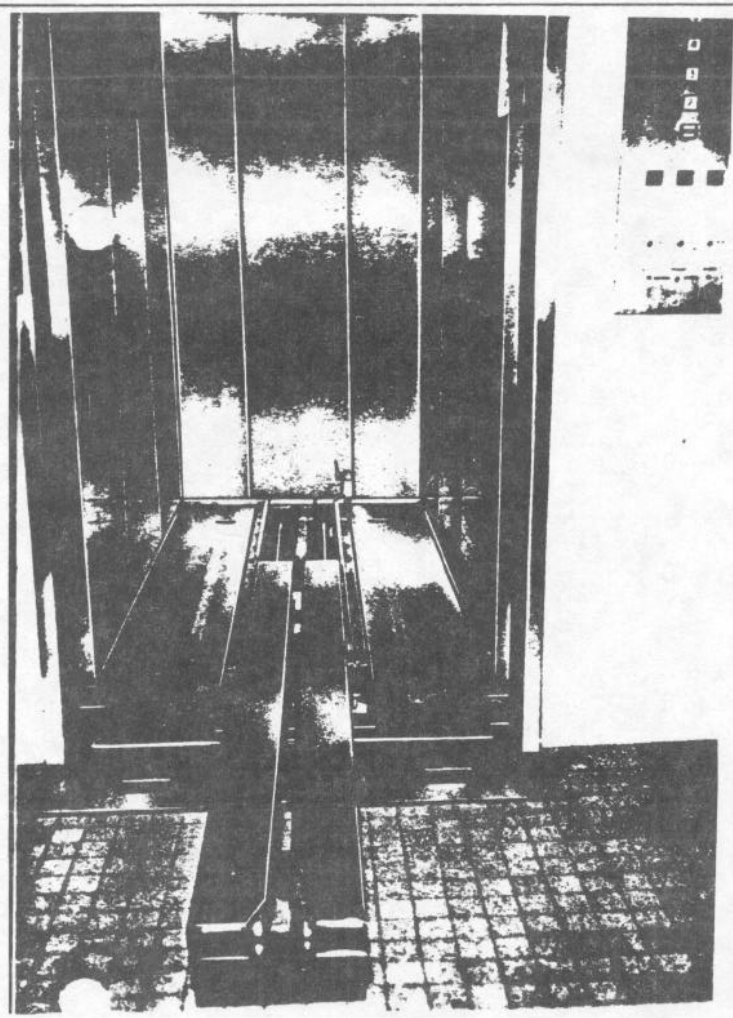

FIGURE 5-7
Typical Cart Lift Ejector

CHAPTER 6

SPECIAL APPLICATION ELEVATORS

6.1 INTRODUCTION

NOTE: Paragraphs identified with a vertical line in the left margin are inspections that should be made by certified Vertical Transportation Equipment Inspectors only.

6.1.1 Scope

Several types of elevators with special application, covered in separate parts of the A17.1 Code as noted, are included in this section: Power Sidewalk Elevator, Private Residence Elevators, Special Purpose Personnel Elevators, Inclined Elevators and Handicapped Lifts. Inspection procedures covered in this section are necessarily general since a wide variety of equipment types supplied by many difference manufacturers may be encountered. ANSI/ASME A17.2 Inspectors Manual for Elevators and Escalators does not address the specifics of inspections for these applications. It does however, cover the approach to inspection and safety you should follow. In addition, many units you will inspect will be adaptations of conventional electric traction and hydraulic equipment. The safety aspects of inspection of this equipment are covered. These should be reviewed and the suggested procedures followed.

6.1.2 Procedure

Every procedure for the equipment variety you will encounter cannot be covered. Use common sense to apply inspection procedures. One final note: because the equipment you encounter may be unfamiliar; unique, one-of-a-kind variety; or manufactured by companies not normally involved in elevator design and installation, be especially careful making inspections on this type of equipment.

6.2 SIDEWALK ELEVATORS

6.2.1 Introduction. Figure 6-1 shows a typical sidewalk elevator arrangement using winding drum equipment with component names that will be used in this manual. Some installations use a hydraulic jack to raise and lower the car. The A17.1 Code has specific limiting requirements as to where and how these devices can be used. These requirements should be reviewed prior to making an inspection.

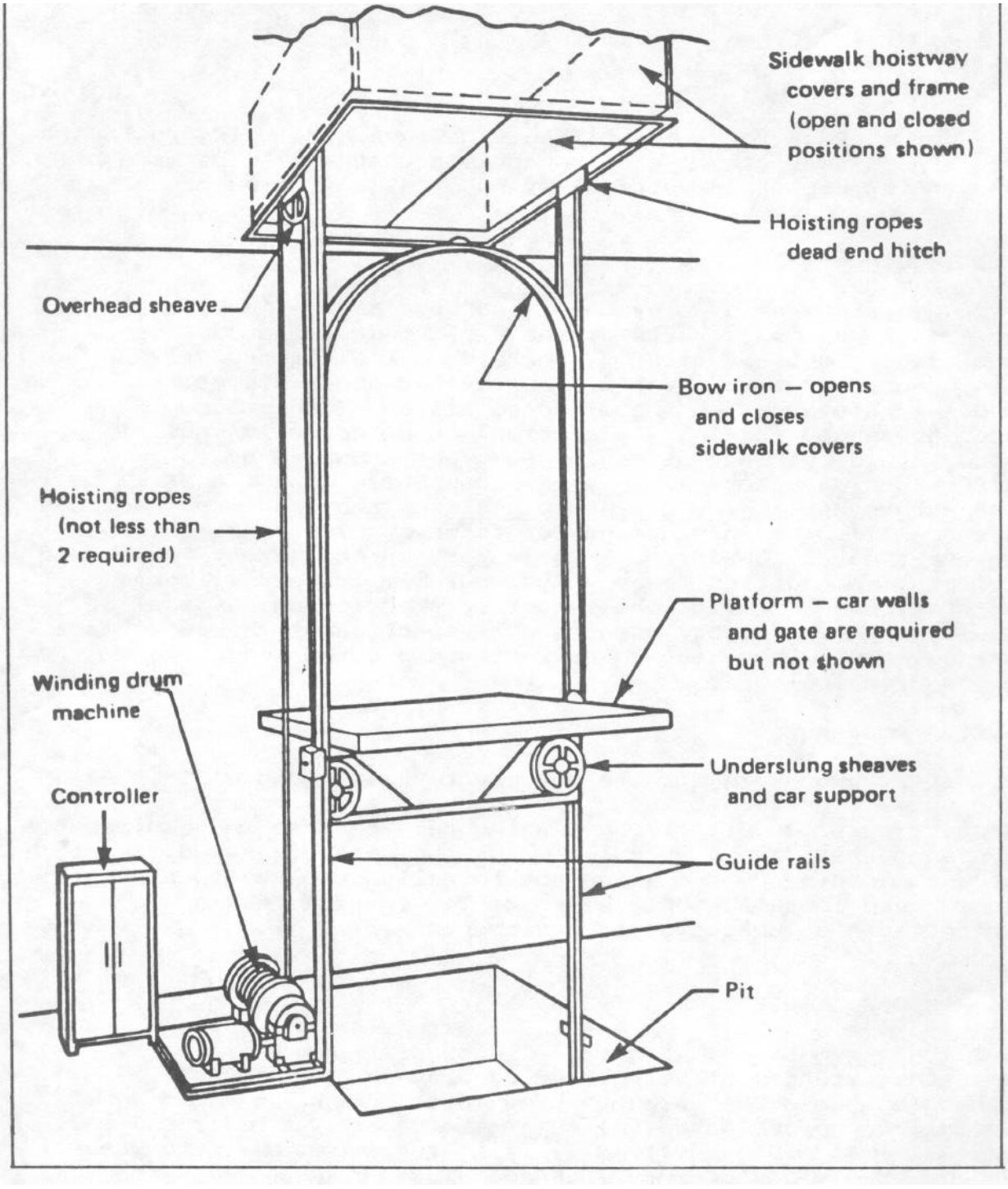
Sidewalk hoistway covers and frame (open and closed positions shown)
Hoisting ropes dead end hitch
Overhead sheave
Bow iron — opens and closes sidewalk covers
Hoisting ropes (not less than 2 required)
Platform — car walls and gate are required but not shown
Winding drum machine
Underslung sheaves and car support
Controller
Guide rails
Pit

6.2.2 Inside The Car Inspection

6.2.2.1 Introduction. Division 101 of the A17.2 Manual describes the various inspections that are made from inside the car. These should be followed with the special considerations noted hereafter.

6.2.2.2 Car Enclosure. Item 101.1 addresses inspection of the car enclosure. Tops are not required on sidewalk elevators but the car should be enclosed with solid metal walls at least 6'-0" high and be provided with gates on loading sides. Determine that bow-irons and stanchions are solidly set, approximately symmetrical with the car center lines and suitably braced to withstand impact when striking doors and covers. The overall enclosure should not have loose or missing components or hardware. When something is missing or loose, total safety is compromised. A common example on older sidewalk elevators is the lack of proper car enclosure and car gates. Freight handling elevators are, by their intended use, subject to damage. Just because it is a freight elevator, the degree of inspection should not be lessened. In fact, it should be strengthened because of its vulnerability to damage. Car gates are a prime example, whether they are of the open type construction (example: wire mesh, expanded metal, wooden slat, etc.) or solid panel. Many times you will find damaged gates. Open type construction is very susceptible to distortion and could result in compromising the protection required by the A17.1 Code. This must be constantly checked. The same close examination should be given to the door system on this type of elevator that is given to passenger type elevator doors. They are also essential to a good operating elevator.

6.2.2.3 Car Illumination. Item 101.2 addresses car illumination. Since sidewalk elevators should be classified as freight elevators, emergency illumination is not required.

6.2.2.4 Operating and Control Devices. Item 101.3 pertains to inspection of operating and control devices. operation can be automatic or continuous pressure. However, operation of the car through exterior openings that are protected by hinged doors or vertically lifting covers must be by constant pressure controls located at the exterior location. Run to the limit of vertical travel of the car to verify that the car will not travel through the exterior opening from car controls. Also verify that the car will not operate unless all hoistway doors and car gates are closed.

6.2.2.5 Hoistway Inspection. Inspections normally made from the top of the car as addressed in Division 103 of the A17.2 Manual should be made from inside the car, from the exterior landing and from inside the hoistway (pit) because,of the lack of a car top.

The open car construction should allow sufficient access to this equipment; however, a ladder may be necessary for close inspection of specific items. Extreme caution should be taken in this case to assure the elevator will not operate when using the ladder. The lack of a car top control device makes this area of inspection quite difficult. It is necessary for the inspector to review the installation and the equipment, and formulate a specific inspection procedure based on general inspection and safety procedures modified for the specific application.

6.2.3 Outside The Hoistway Inspection

6.2.3.1 Hoistway Entrances. Division 102 of the A17.2 Manual describes the various inspections that are to be made from outside the hoistway. Hoistway entrances are the most important equipment examined at this time. Items 100.1 to 100.5 as well as items 103.12 and 103.13 of the A17.2 Manual are included by reference in the examination procedure of the hoistway enclosure and doors. These items should be followed with the special considerations noted hereafter.

6.2.3.2 Sidewalk Opening. Sidewalk openings are most likely protected with hinged doors. (vertical rising covers may be infrequently encountered but since requirements are similar, reference will be made to doors only.) These doors should be carefully checked. Note structural defects and rust that should be cleaned and parts repainted. Note any damage to the door panel which could result in a tripping hazard when the door (cover) is closed or allow objects to fall into the hoistway below. Finally, try to open the door without touching the locking device. It should not open. Sidewalk door arrangement size and location are carefully covered by the A17.1 Code in order to minimize unsafe conditions. Door size may not exceed 7'-0" (parallel to the building line) by 5'-0". Doors must have a non-slip upper surface. Door hinges must be mounted at right angles to the line of the building. The side of the door opening nearest the building wall may be no more than 4" from the wall. No obstruction may be closer than 18" from the sidewalk doors when in their fully open position. Inspect door hinges for rust, damage and wear. Check that they are securely fastened and operate freely. If sidewalk doors can be secured in the open position, verify that metal screen panels that are always closed when the car is not at the top terminal are provided.

6.2.3.3 Operation. Operation of the elevator through sidewalk openings must be from the sidewalk location. Operation must be by means of key operated, continuous-pressure type up and down switches or by continuous-pressure type up and down operating buttons at the free end of a detachable, flexible cord not more than five feet in length. Controls should be within 18" horizontally of the side of the door. Verify that controls provided for sidewalk operation meet these requirements. Operation from the car was previously checked. (The car should not lift doors using car controls.) Using sidewalk controls run the car up, lifting the doors. Verify free operation and note that the doors cannot open more than 90 degrees from their closed position. Run the car in the downward direction; the sidewalk screens (if provided) and doors should automatically begin to close. With the sidewalk doors (screens) partially closed, verify that other operating controls on the car or other landings will not function as long as bow iron is in contact with the sidewalk door or screens. (Only sidewalk controls should function.) Sidewalk controls should be weatherproof type if exterior to the building or exposed to weather.

6.2.4 Machine Spaces And Machine Room Inspection

6.2.4.1 Introduction. Divisions 104 and 204 (hydraulic) of the A17.2 Manual describe the various inspections that are made in the overhead machinery space and machine room. The beginning of this section describes various safety precautions that should be followed when making this part of the inspection. Use Division 104 to make machine room inspections of sidewalk elevators with special considerations noted hereafter. Machine room equipment can be of the electric or hydraulic type. Each has special requirements for inspection as hereafter noted.

6.2.4.2 Electric

6.2.4.2.1 Safety and Governor. If sidewalk elevator speed does not exceed 50 fpm, broken (slack) rope safety devices may be used and governors are not required. Check car speed if no governor is noted. If a governor is provided, follow inspection procedures outlined in the A17.2 Manual explicitly.

6.2.4.2.2 Drive Sheave or Drum. Traction or drum sheave wear is usually detected by finding metal particles under the sheave. However, an inspector should watch for the signs that lead to wear before results are seen. The major cause of wear is uneven rope tension. The sheave is designed to carry the load spread over all the ropes. When one is under more tension than the others, this load is transferred to the tighter rope. This can usually be seen by laying a straight edge across the ropes in the drive sheave grooves. (See Figure 2-9 and 2-10).

All ropes should touch the straight edge. Ropes that do not touch indicate uneven tension or possible sheave wear. occasionally, mistakes are found in the type or size of ropes used. Check data tags to verify proper application.

6.2.4.2.3 Guards. Procedures as outlined in Section 2.5.5 are applicable.

6.2.4.2.4 Gears And Bearings. Procedures as outlined in 2.5.6 are applicable.

6.2.4.2.5 Hoist Motor. Procedures as outlined in Section 12.5.7 are applicable.

6.2.4.2.6 Brake. Procedures as outlined in Section 2.5.8 are applicable.

6.2.4.3 Hydraulic

6.2.4.3.1 Relief Valve. Procedures as outlined in Section 13.5.3 are applicable.

6.2.4.3.2 Pump Unit. Item 204.6 of the A17.2 Manual relates to checking for excessive oil in drip pans under the pump unit. Good maintenance will keep oil leakage to a minimum. There will be some because of vibration, but it can be kept to a minimum. Some pump units are designed where components are housed in the oil storage tank. (See Figure 3-5 and 3-6). One of the reasons for this is to reduce the need for tight fittings. Leakage indicates a potential problem and, when found, the problem should be corrected. Many times guards are removed to service equipment and in haste are not returned to their proper place. A guard sitting off to the side is not doing its job and could result in a serious accident. A thorough check of the pump motor and pump bearings should be made on each inspection trip. Problems in these areas do not happen overnight. If found early, they can greatly reduce repair costs and time. Bearing problems are detected by sound and/or heat.

6.2.4.4 Controls. Procedures as outlined in Section 2.5.11 are applicable.

6.2.4.5 Machine Room. Procedures as outlined in Section 12.5.12 are applicable.

6.2.4.6 Machine Room Access. Procedures as outlined in section 2.5.13 are applicable.

6.2.5 Pit Inspection

Divisions 105 and 205 of the A17.2 Manual describe the various inspections that are made in the pit. The beginning of section 105 describes various safety precautions that should be followed when making this part of the inspection. Do not enter wet pits; especially do not enter wet pits carrying an electric extension light. Sidewalk elevator hoistways and pits are especially vulnerable to the entry of water through the sidewalk door. Traveling cables and all hoistway switches and wiring should be of the weatherproof type. Inspectors should carefully examine all pit and hoistway equipment for rust or deterioration which would result from periodic wetting. All pits should have means to remove water. (Note: A17.1 prohibits drains connected directly to sewer lines.) Trash, oil and dirt in the pit are an extreme hazard. Fire potential becomes a great concern. This not only means on the floor, but it also means on the hoistway equipment which can be observed from the pit. Be sure all areas are kept clean. The A17.2 Manual gives complete instruction for properly examining equipment from the pit. These should be followed very closely.

6.2.6 Periodic Inspection And Tests

6.2.6.1 Scope. The A17.1 Code indicates that sidewalk elevators are subject to routine and periodic tests (Rule 1010.1). Procedures and methods described in the A17.2 Manual for electric and hydraulic elevators should be applied when inspecting sidewalk elevators. Testing data should be specifically documented on the inspectors report that these tests have been performed and the dates the tests were made.

6.2.6.2 Governor and Safety. Division Ill of the A17.2 Manual covers the annual inspection of the governor rope system on electric elevators. Division 112 of the A17.2 Manual covers the annual inspection and test of the car and counterweight safeties on electric elevators. This is a no load, slow speed test of the safety equipment. Division 113 of the Manual covers the inspection and testing required every five years. These test are done to exercise the equipment to assure its proper operation.

6.2.6.3 Normal and Final Limits. Division 116 of the A17.2 Manual covers the annual operational test of normal and final terminal stopping devices. The limits only receive a functional test during routine inspections. The annual test requires setting conditions which will require the limits to operate as they would if conditions warranted.

6.2.6.4 Hydraulic Elevators. Division 210 of the A17.2 Manual describes various operational tests that are required to be performed on hydraulic elevators. Those included under 210.1 are to be performed annually, those under 210.2 are every three years and those under 210.3 every five years.

6.2.6.5 Sidewalk Door Operation. Elevator operation with the bow-iron in contact with sidewalk doors and gates should be included in periodic tests.

6.3 RESIDENCE ELEVATORS

6.3.1 Introduction

Elevators in residences cannot be classified as "residence" type unless they meet specific requirements set forth in the A17.1 Code: Maximum load capacity of 700 pounds, maximum inside car area of twelve square feet, rated speed not exceeding forty feet per minute and rise not exceeding fifty feet. Figure 6-2 shows a typical overhead traction residence elevator arrangement with component names which will be used in this manual. An elevator in a residence may be a conventional electric or hydraulic unit. Inspection for such units should be based on requirements of Chapters 2 and 3 of this manual, with reference to this Section and the A17.1 Code for allowable variations from commercial installations. The most common residence elevator is electric, with cable drum or chain drive. Other applications such as screw machines, and direct roped hydraulic may be encountered. Since these are rare, this Section will be limited to the overhead suspension type. Even with this limitation, the possible variety in equipment is very wide. Inspectors must use common sense and these instructions as guidelines with special equipment they encounter.

6.3.2 Inside The Car Inspection

6.3.2.1 Enclosure. The c.r enclosure should be structurally sound and securely fastened to the platform. Open grillwork is permitted if openings reject a 1/2" diameter ball. Use of glass is subject to A17.1 Code, Rule 204.1h. As previously noted, car capacity may not exceed 700 pounds and area inside the car may not exceed 12 square feet. Also, report any alterations or additions which might have increased the car weight. The only equipment in the car should be that used for elevator operation. other equipment may be a hazard and should be removed. Examine the car floor and platform. Both should be in good condition and should feel "firm". Look for any loose fastenings in the car and on the landing sill.

6.3.2.2 Illumination. Verify that car lighting is adequate and examine the fixture to be sure it is securely fastened.

6.3.2.3 Car Door or Gate. Examine the car door or gate (one is required.) Note any broken or bent components. Operate the closure means to determine free operation. Sill guides should be securely fastened and not worn enough to permit the door or gate to leave the track.

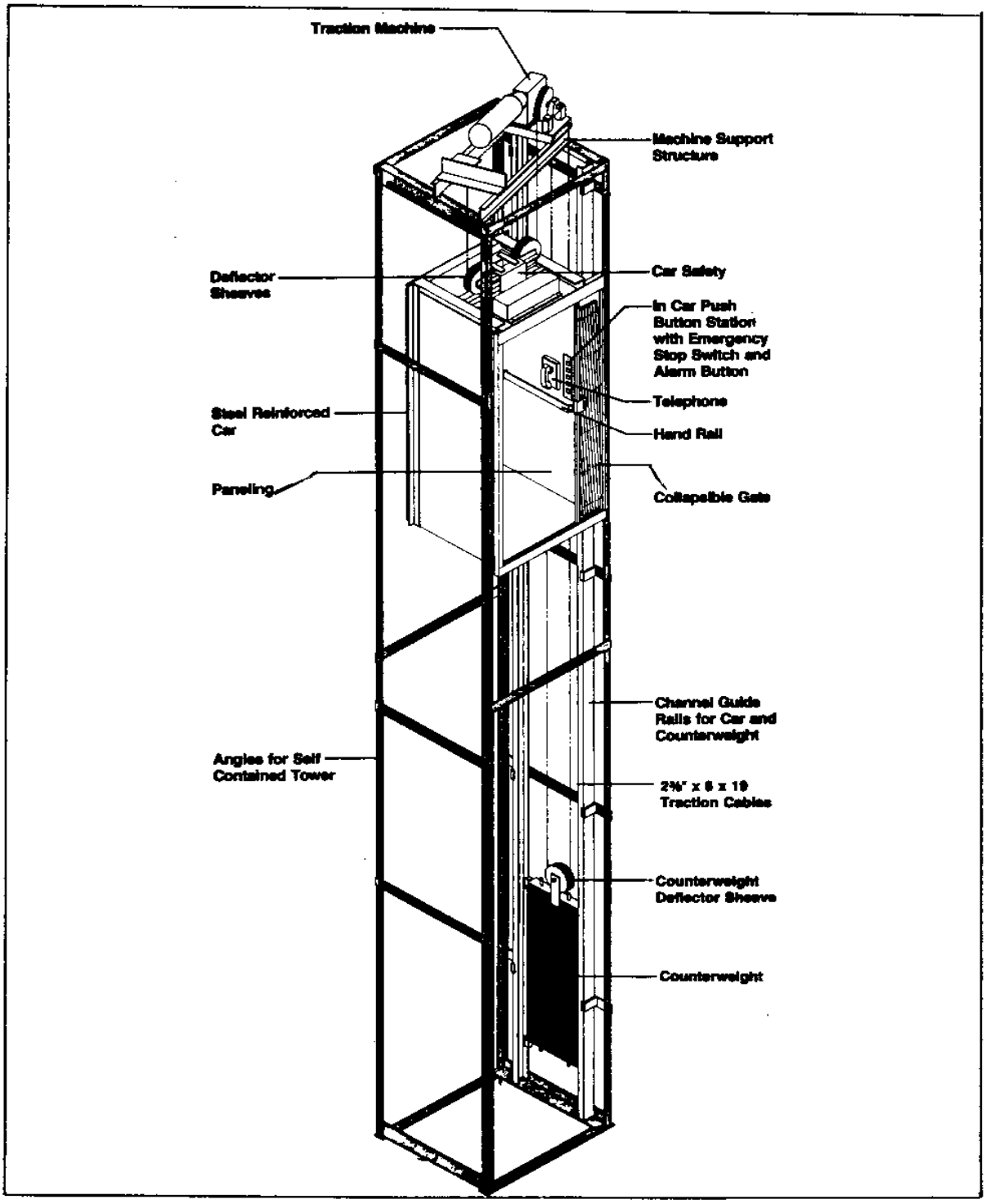

FIGURE 6-2
Typical Residential Elevator

6.3.2.4 Operation. With the gate (door) in the open position, actuate up and down controls. The car should not move. Check other control switches. As a minimum, these should include: car light switch, car stop switch and alarm. An operational phone should be located in the car. Close the car gate (hoistway doors also closed if provided.) Operate the car in both directions. Note that buttons function correctly and operate freely. Operation may be constant pressure or single automatic. If constant pressure, the car should stop when the button is released. Test operation of the emergency stop switch.

6.3.2.5 Operating Clearance. At each floor, open the car door or gate and notice the relationship between the car and landing sills. (minimum clearance is 1/2", to a maximum 1-1/2". Clearance between hoistway doors and the edge of the landing sill may not exceed 3", and the door may not extend beyond the sill edge. Total space between the hoistway door and car sill may not exceed 5".)

6.3.3 Outside The Hoistway Inspection

6.3.3.1 Hoistway. The primary inspection made outside the hoistway is the check of hoistway doors. Residence elevators do not require complete hoistway enclosures and hoistway doors under certain circumstances. For example, an enclosure is not required at the lower landing if the platform is equipped with a device sensing obstruction. (See Figure 6-3). Similarly, the upper floor enclosure on a two-stop elevator can be omitted if the floor opening is protected by a 36" high enclosure and gate. Carefully check the specific installation and report any potentially dangerous conditions.

6.3.3.2 Hoistway Entrance. Where doors are provided in an enclosed hoistway, each should be carefully inspected including their manual latches. Note any broken glass panels or structural defects in solid doors and door frames. Try to open each door with the car away from the floor, both by pulling and lifting while pulling. The door should not open. Try to run the car with each door open. The car should not run. Inspect the mechanical lock and contacts for proper operation. Generally, this can be accomplished by visual examination of the relationship between the electrical contact, the mechanical locking mechanism and the car door latching member. Checking car operation and door locking in conjunction with this visual examination should insure correct operation of this most important safety feature.

6.3.3.3 Operation. Actuate controls at each floor. If the car gate and hoistway doors are properly closed, the car should start and travel to the floor. Conversely, if any door or gate is not closed, the car should not run. Buttons should operate freely and be securely fastened to the wall.

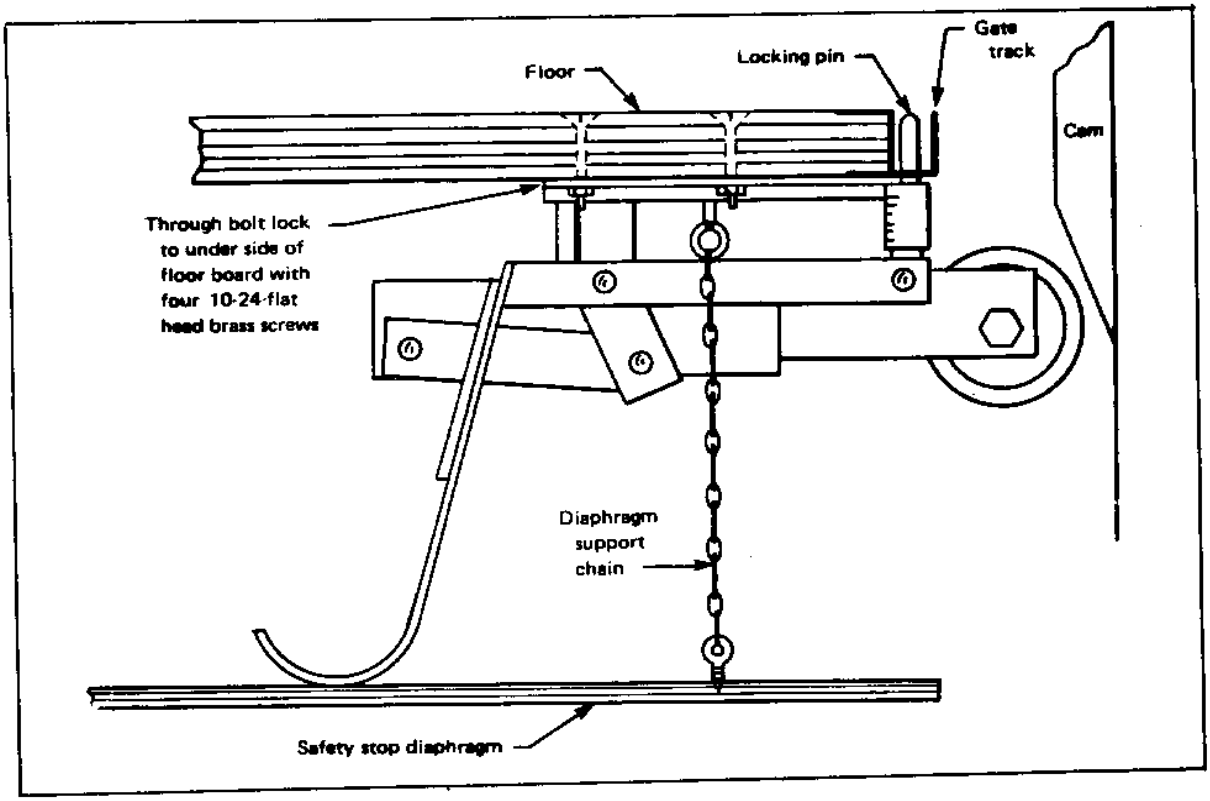

FIGURE 6-3
Under-Platform Pressure Switch

6.3.4 Machine Room And Machine Space Inspection

A data plate indicating capacity, means of suspension, rated speed, manufacturer and installation date should be posted at the machine/control location. Inspect the machine and sheave/sprocket fastenings to make certain they are secure. Also check for wear, excessive play and leaking lubricant. Means should be provided for hand cranking the machine in both directions. Car speed should be verified and .should not exceed 40 feet per minute.

6.3.5 Inside The Hoistway Inspection

6.3.5.1 Pit. Where a pit is provided, it should be clean and dry. Nothing should be stored in the pit.

6.3.5.2 Wiring. Only wiring required for elevator operation should be allowed in the hoistway. Check all wiring for loose connections and worn insulation.

6.3.5.3 Sheaves and Sprockets. Check sheaves and sprockets for wear, proper size and secure fastening.

6.3.5.4 Hoistway. Hoistway should be clean, with no loose fastenings. Visually, check hoistway walls, the car bottom, and all visible appurtenances for unusual conditions. As previously noted, travel may not exceed 50 feet, and at least 6" top clearance must be provided. Clearance is based on a maximum car speed of 30 fpm. If speed exceeds 30 fpm, check the Code for increase factor.

6.3.5.5 Counterweights. Counterweights, if provided, must run in guide rails, be fastened securely together and guarded wherever accidental contact might occur. (Openwork must reject a 1/2" diameter ball.) If space below the hoistway is occupied, safety devices must be provided on counterweights and spring buffers must be provided in the pit.

6.3.5.6 Buffers. If there is no occupied space below the hoistway, buffers may be omitted. If the pit floor is strong enough to withstand the impact of a car or counterweight descending at rated speed.

6.3.5.7 Safety Device. All residence elevators are required to have car safety devices. The slack cable or governor actuated type are allowed. Governor actuated safeties must operate at a governor tripping speed not exceeding 75 feet per minute. Visually check the safety device for dirt and corrosion. If there is any question whether the device will operate properly, require a test.

6.3.6 Periodic Inspection And Tests

The A17.1 Code indicates the residential elevators are subject to routine and periodic tests (Rule 1010.2). Procedures and methods described in the A17.2 Manual for electric and hydraulic elevators should be applied when inspecting sidewalk elevators. Testing data should be specifically documented on the inspector's report that these tests have been performed, as well as the dates the tests were made.

6.4 SPECIAL PURPOSE ELEVATORS

6.4.1 Introduction

The A17.1 Code, Part XV, covers Special Purpose Personnel Elevators. These are elevators permanently installed in a wide variety of structures and locations to provide vertical transportation of authorized personnel and their tools and equipment only. Such elevators are typically installed in structures such as grain elevators, radio antenna and bridge towers, underground facilities, dams, power plants, and similar structures where by reason of their

limited use and the types of construction of the structures served, full compliance with Parts I and II of the A17.1 Code is not practicable or necessary. Special purpose personnel elevator cars have a traction, winding drum, screw, or rack and pinion driving machine. As in the case of other special application elevators the equipment variety is wide, and in most instances unique. Refer to the A17.1 Code, A17.2 Manual and other parts of this publication for inspection information which is applicable to the specific components found on these unusual elevators. Absolute review of each equipment combination and conditions of operation is not possible. The practical approach combines the inspector's common sense with general principles which apply to the safe and suitable operation of elevators in general. Special purpose elevators are defined by A17.1 Code, Rule 1502.9. Rated capacity may not exceed 650 pounds, with no more than nine square feet of area inside the car. Speed is limited to 200 feet per minute or less.

6.4.2 Inside The Car Inspection

6.4.2.1 Enclosure. Car enclosures can be solid or openwork, which will reject a ball 1" in diameter. Minimum clear height inside the car is 78" Cars should be structurally adequate and securely fastened to the car platform. Glass can be used in vision panels and light fixture only. Check all these items. Car capacity and inside area should be checked. Any additions or alterations that might have changed the car weight should be reported. Only equipment required for elevator operation should be allowed inside the car. Examine the car floor and platform. Both should be sturdy and without damage. Look for any loose fastenings.

6.4.2.2 Illumination. Car light and switch are required. Check that both are operating, not damaged and securely fastened.

6.4.2.3 Car Door and Gate. Cars must have gates or doors of solid or openwork construction. Openwork must reject a 1" diameter ball; collapsing gates a 3" diameter ball. Examine the gate or door. Note any broken, damaged or rusted components. Operate the gate/door; it should move freely. Guiding means should be securely fastened and not worn enough to allow the door or gate to leave the support and guiding means. Car doors and gates must be equipped with means to lock the door with the car away from the floor, and to prevent operation if a door is not fully closed. Verify this operation at each floor and with the car door/gate open. Means to open the hoistway doors at each landing, even if the car is away, should be provided. Check this feature while verifying hoistway door locking arrangement for proper operation. An emergency exit is not required and should not be provided in most instances. Means to summon assistance in emergency by alarm or two-way communication means such as telephone are required, and should be checked for proper operation.

6.4.2.4 Operation. With the car door/gate in the open position, actuate the up and down controls. The car should not move. Check other car controls. Close the car door/gate. Operate the car, stopping at each landing to make the door tests,previously noted. Buttons should operate freely and function properly. Check the operation of the emergency stop switch during this operation of the car.

6.4.2.5 Operating Clearance. As the doors/gates are opened at each floor, notice the relationship between car and landing sills. Both should be securely fastened and clean. Hoistway doors should not extend beyond the landing sill. Car and hoistway sills should not be less than 3/4" or more.than 1-1/2" apart. Space from the hoistway door to the edge of the hoistway sill should not exceed 2-1/4" and the space between car door/gate and hoistway door may not exceed 5-1/4".

6.4.3 Top Of Car Inspection

If inspection from top of car is not safe or practical the inspection should be made from inside the car.

6.4.3.1 Top Car Clearance. Extra care must be exercised when determining top car clearance to prevent injury since the required clearance is only 30 inches from the highest projection of the car top to the nearest part of the overhead structure. For traction elevators, run the car level with the top terminal landing and measure the distance from the highest top car projection to the nearest overhead structure. Subtract from this the total of the counterweight buffer stroke and the bottom counterweight runby. The result must be 30 inches or greater. For rack and pinion elevators, from inside the car cause it to travel to its uppermost limit. Then measure the distance from the highest projection of the car top to the nearest overhead structure. This distance must be greater than 30 inches.

6.4.3.2 Stop Switch on Top of Car. Place the top car stop switch in the stop position and attempt to run the car from inside to verify that the switch works. Inspect the switch for compliance with rule 210.2h. A car top operating device is not required, however, if provided it must comply with rule 210.2 and be inspected as outlined in item 103.14.

6.4.3.3 Projection of Hoistway Doors Into Hoistway. Check that hoistway face of doors or gates do not project into hoistway beyond the landing sill, except for locks, signals, operators (Rule 15006b).

6.4.3.4 Guide Rails and Fastenings. Inspect the guide rails land fastenings for well fitting joints and secure fastening.

Check for evidence of excessive deflection (over 1/4 inch) by observing the rail with car operating. Note that rails extend from the bottom of hoistway to top sufficiently to prevent guide shoes from running off the rails.

6.4.4 Outside The Hoistway Inspection

6.4.4.1 Hoistway. Inspection outside the hoistway should verify an adequate hoistway enclosure. Provisions should provide protection from accidental contact with the moving car or counterweight (if provided) and prevent entry into the hoistway when the car is away from the landing. A complete hoistway enclosure is not required, but where provided for safety, it should be solid or reject a 1" diameter ball.

6.4.4.2 Hoistway Entrance. The full width of each landing opening must be protected to full height (or 7'-0" whichever is less) by doors or gates. Open work must reject a 1" diameter ball. Inspection of landing closures should note damage, rust and critical wear in moving parts and contact points. Open and close each hoistway door or gate with the car at the floor. It should operate freely; all components should be clean and securely fastened. Try to open each door or gate with the car away from the floor; it should not open. Try to run the car with each door open; the car should not run. Operation of the hoistway entrance lock and contact devices is a critical safety element. Each lock should be carefully examined. It should be securely fastened, cleaned and aligned so that the contact and lowering mechanisms are properly related.

6.4.4.3 Operation. Actuate controls at each floor. Fixtures should be securely fastened, buttons should operate freely and controls should call the elevator to the floor if car and hoistway doors/gates are closed properly.

6.4.5 Machine Room And Machine Spaces Inspection

6.4.5.1 Housekeeping. Machine room and equipment cleanliness is of primary concern with this type elevator. Location may be remote and used infrequently. Maintenance may be intermittent. Generally observe the machine room access, lighting, ventilation, cleanliness and guards preventing accidental contact with moving parts. Any unsafe condition should be noted. Only material and equipment necessary for elevator operation and maintenance should be stored in the machine room.

6.4.5.2 Hoist Machine. Inspect the machine and sheave fastenings to make certain they are secure. Check for wear, gear play and leaking lubricant. Operate the elevator. Check the brake operation. Inspect brake pads for wear and note that the brake is electrically released and mechanically applied.

6.4.5.3 Governor. Type A safety devices are required on traction and winding drum elevators. Check governors for proper maintenance. All parts should operate freely, but not have excessive play. Safety jaws should be clean and free from lubricant.

6.4.5.4 Slack Cable or Chain Device. Check the slack cable/chain device. Power should be removed from the elevator system if the suspension means breaks or goes slack for any reason.

6.4.5.5 Clearance. Observe the machine space and all equipment for general cleanliness and unsafe conditions. Space should be adequately lighted and ventilated. Equipment should be guarded.

6.4.5.6 Controls. Check control panels. Equipment must be grounded and properly fused. Look for worn or burnt components, broken or abraded insulation and wiring, loose connections and disconnected wires. The mainline switch should be arranged so that it can be locked when disconnected.

6.4.6 Inside The Hoistway Inspection

6.4.6.1 Buffers. Pits with buffers and bottom runby conforming to regular traction elevators are required.

6.4.6.2 Pit. Pit should be clean and dry, free of stored material. Pit equipment should be clean and free of rust. Check operation of the light switch, light and stop switch.

6.4.6.3 Hoistway. Only pipes or wiring related to elevator operation should be located in the elevator hoistway. Check that all equipment is securely fastened, clean, properly lubricated and not rusted. Check hoist ropes for uniform tension, breaks and wear. Cables must be properly lubricated and free of rust and red rouge.

6.4.6.4 Counterweights. Counterweights must be guarded in the pit and in the hoistway wherever accidental contact might occur. Protection must reject a 1" diameter ball. Normal rules apply if occupied space is located below the pit.

6.4.6.5 Car Safety Device. Visually check car bottom for cleanliness. Observe safety device to determine that parts are free to operate.

6.4.7 Periodic Inspection And Tests

The A17.1 Code indicates that special purpose elevators are subject to routine and periodic tests (Rule 1010.6). Procedures and methods described in the A17.2 Manual for electric and hydraulic elevators should be applied when inspecting special purpose elevators.

Testing data should be specifically documented on the inspector's report that these test have been performed and the dates the tests were made.

6.5 HANDICAPPED LIFTS

6.5.1 Scope

Part XX of the A17.1 Code covers Inclined Chairlifts and Inclined and Vertical Wheelchair Lifts. These devices are intended for use by the physically handicapped to facilitate access through architectural barriers. They are an economical means of providing access especially in existing structures. Figures 6-4 through 6-7 show typical application of these devices. The Code does not presently specify a frequency for inspecting these devices. Location of the device should actually be used to make this determination. Units located outside will need inspections more frequently than those inside. It is recommended that all devices be inspected at least every 6 months.

6.5.2 Platform Inspection

6.5.2.1 Platform. Examine the complete assembly with the platform at the lowest level. Determine that all fastenings are secure and that no components are damaged or bent. Note that all surfaces are properly painted or otherwise protected. Check guide channels to be sure they are smooth, not worn or bent and properly greased.

6.5.2.2 Car Gate. Examine gate locks at both levels. Verify that they are securely fastened, properly aligned, operating freely, clean and free from corrosion.

6.5.2.3 Operation. Open the landing gate, actuate the car control to verify that it will not move. Verify this same function with the car gate open. Close all gates and press the "up" control. Car should start in the up direction but stop if pressure on the control is released. During the up trip verify the following:

a. That protective side screens are properly positioned and secure.

b. That there is no obstruction that might strike a riding passenger.

c. That the ride is smooth and without bumps or jerks.

The platform should stop automatically at the upper landing. verify proper stopping accuracy. Open car and landing gate and press "down" operational control. The platform should not move.

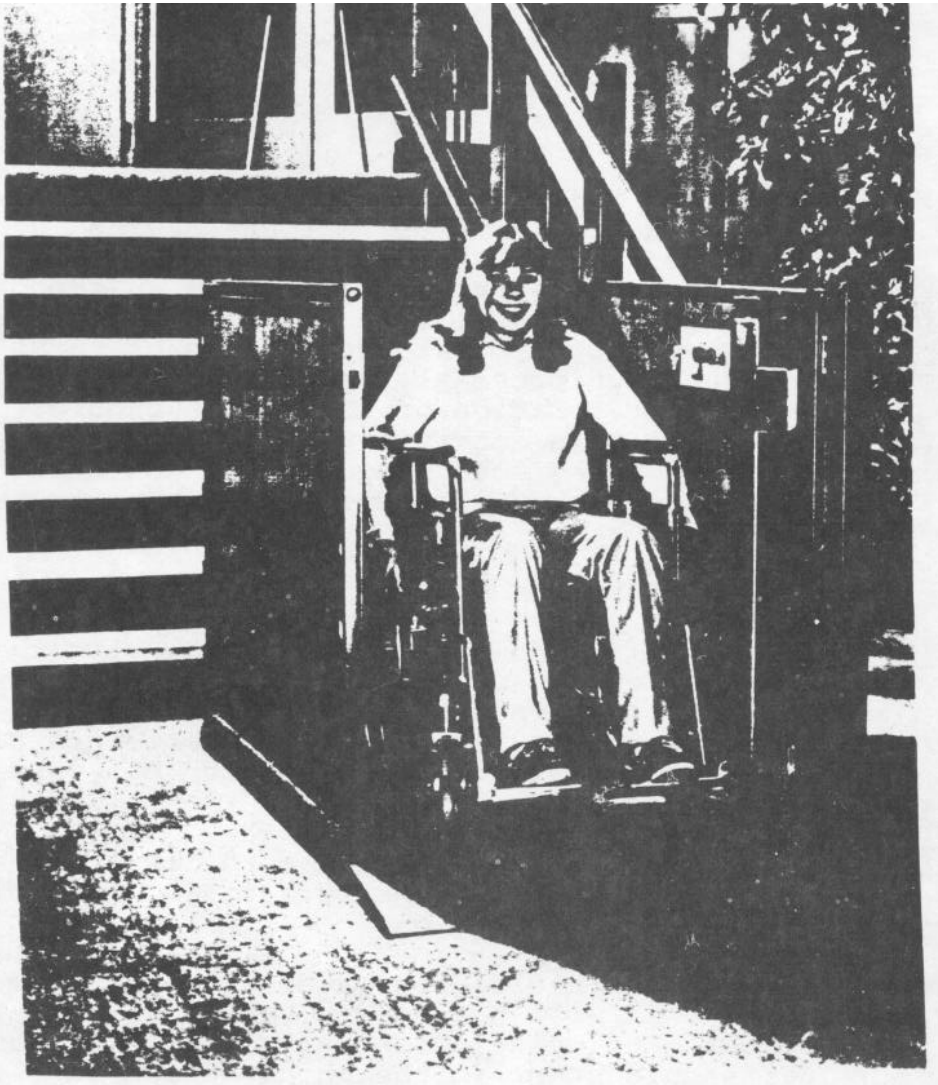

FIGURE 6-4
Typical Inclined Wheel Chair Lift

FIGURE 6-5
Typical Vertical Wheel Lift
Without Hoistway Enclosure

FIGURE 6-6
Typical Vertical Wheel Lift
With Hoistway Enclosure

FIGURE 6-7
Typical Inclined Stairway Chairlift

Close the gates and return to the lower landing. The platform should stop automatically at the lower level. Open the car and landing gate to verify proper stopping accuracy. Verify proper operation of the alarm bell.

6.5.2.4 Access Ramp. Some units have an automatic access ramp which rises and locks during travel. If the unit has such a device, verify that it is suitably adjusted and operates properly.

6.5.3 Landing Inspection

6.5.3.1 Landing Gates. Examine landing gates. Verify that all fastenings are secure, that the gates swing freely and are not damaged. Gates should be clean and properly painted. Normally, each landing will have a ramp integral with the landing gate supporting assembly. Check this ramp for proper fastening and fit. Be sure both ends are flush with adjacent floor or members and will not obstruct wheel chair or present a tripping hazard to a pedestrian.

6.5.3.2 Operation. With the platform at the lower level, check that the upper level gate cannot be opened. Actuate the upper level control and verify proper operation. Check side screens for damage or corrosion. They should be clean and properly painted. Listen while the unit is operating, for abnormal sounds which might indicate problems with motor, screw drive or screw drive bearings. Attempt to open the lower landing gate. It should not open with the platform at the upper level. Actuate the landing control and verify proper operation.

6.5.3.3 Platform. With the platform at the top level, inspect the space under the platform. It should be clean. Verify that inside surfaces of the side screens are clean and properly painted.

6.5.4 Machine Space Inspection

6.5.4.1 Access. Access to the machine space is normally accomplished by removing a protective panel. Most units have panels that lift and rotate to remove. Before removing the access panel disconnect the power supply with the platform at the lower level.

6.5.4.2 Controls. Check the electrical control panel. Power should be provided to the panel from a lockable electrical disconnect device located adjacent to the unit. The power circuit should be fused at some point. Wiring should be properly fastened with no loose connections or unsecured wires. Verify that the unit is properly grounded. Replace the junction box cover.

6.5.4.3 Hoist Machine. Normal motors are usually AC type with sealed bearings. Check the motor and drive sheave for evidence of abnormal condition or corrosion. Connection to the screw drive will generally be "V" belts. Inspect belts for wear and proper tension (proper tension is about 1/2" deflection at the center with medium thumb pressure). Inspect the screw and nut (ball). The screw should be clean, lightly greased and show no sign of damage or abnormal wear. Bearings at the top and bottom of the screw should be properly greased. Check all connections to be sure they are secure. Verify the machine space is clean and properly painted with no corrosion. Replace the cover and restore power.

6.6 INCLINED ELEVATORS

6.6.1 Introduction

The rules of Part XVII are applicable to inclined lifts intended for public use. An inclined elevator is defined as an elevator where the angle of inclination is less than 70 degrees from horizontal. The Code allows inclined elevators to be driven by traction, winding drum or screw type drives. The majority of inclined elevators are traction drive type with components comparable to a standard elevator. Entry will be protected by some type of enclosure; some type of cab will exist and controls will be provided at landings and inside the car. Your inspection therefore should be based on principles for examining normal elevator equipment. Two characteristics of inclined elevator installations should be kept in mind during an inspection. First, the guide system is usually supported on an elevated structure without a hoistway enclosure between landings. While inspecting the guidepath, the possibility of falling is substantially greater than in a conventional elevator hoistway. Second, the guidepath may consist of open structural supports not unlike an escalator truss. Special care must be taken to secure stable footing.

6.6.2 Hoistway

Hoistway enclosures must be fire rated only if fire resistant construction of the buildings they serve is penetrated. If the lowest surface of the inclined elevator guides or moving components are at least eight feet above the surface below, no enclosure is required. Non fire resistive enclosures must be at least seven feet high and reject a ball 3/4 inch in diameter. The enclosure must be located at least 6 inches from moving components. If the enclosure is at least 36 inches from moving components, the open work can be such that a two inch diameter ball will be rejected. Openwork enclosure areas adjacent to entrances must reject a ½ inch diameter ball.

Enclosures must be supported and braced adequately so that they will not deflect more than 2 inches when a force of 100 pounds is applied to any four square inches. Where an elevated guideway crosses over any passageway, the underside of the guideway must be enclosed.

6.6.3 Inside The Car Inspection

Division 101 of A17.2 Manual describes the various inspections that are made from inside the car on traction elevators. These should be followed with the special considerations noted hereafter.

6.6.3.1 Car Enclosure. (Item 101.1). Tops are not required unless equipment is placed or installed so that servicing from the top of the car is required. Determine that all car components are solidly fastened and braced. Collapsible car gates are not allowed. Hinged doors should only open into the car. Benches and seats are common. The net area inside the car may be increased as much as 50% over normal passenger elevator area for a given capacity rating to compensate for permanently located and nonfolding benches or seats. The overall enclosure should not have loose or missing components or hardware. When something is missing or loose, total safety is compromised. Where the car sill is more than six feet above guard at any point in travel and the hoistway enclosure is more than six inches away from the car door anywhere in the car travel, the car door must have an interlock which prevents opening the door from inside the car, except when the car is within the leveling zone at any floor.

6.6.3.2 Operating and Control Devices. (Item 301.3). Operation can be automatic or continuous pressure. All operating and signalling devices should be securely fastened and operating properly. The signalling devices are important to elevator safety. If the inclined elevator is open to weather, all exposed fixtures should be of weatherproof type.

6.6.4 Outside The Car Inspection

Division 102 of the A17.2 Manual describes the various inspections that are to be made from outside the hoistway on traction elevators. Hoistway entrances are the major items that are examined at this time. Items 100.1 to 100.5, as well as item 103.12 and 103.13, apply to the hoistway enclosure and doors. These items should be followed, with the special considerations noted hereafter.

6.6.4.1 Hoistway Access. Inclined elevators, without fully enclosed hoistways, are not required to have hoistway access switches or parking devices. Means to operate the elevator from outside the car during inspection, adjustment, maintenance and repair are required. The means for transferring control to the exterior device may be in the car or at the controller.

6.6.4.2 Guideway Support Structure. An important inspection made from outside the hoistway is the check of the guideway support structure. This should be visually inspected for the entire length of travel. Carefully note loose fastenings, damaged components and indications of deterioration. Observation of the support with a fully loaded and running car may indicate structure deficiency by flexing or bending of members. Most inspections of roping car and counterweight safety devices, stopping devices, buffers, etc. which are included in Division 103 and 105 of the A17.2 Manual (Inspection Made From Top of Car and Pit) will be made from the guidepath or from the car, depending upon specific equipment design. Note that spring buffers may be used up to a speed of 125 f.p.m. Carefully note traveling cables, suspension and compensation ropes. They must be suitably protected against abrasion and fouling. Components subject to corrosion on exterior installations shall be weatherproofed by acceptable means of protection and fixtures shall be weatherproof type.

6.6.5 Machine Spaces And Machine Room Inspection

Division 104 of the A17.2 Manual describes the various inspections which are made in the overhead machinery spaces and machine room. Use Division 104 to make machine room inspections of inclined elevators with special consideration noted hereafter.

6.6.5.1 Slack Rope Device. A broken (slack) rope device is required on both the car and counterweight sides of the drive machine of the guideway if the inclination is less than 35 degrees from the horizontal. Verify the presence and proper operation of the device if the guideway incline is less than 35 degrees.

6.6.5.2 Safety Device. If the inclination exceeds 35 degrees from the horizontal, a type A safety device may be used if speed does not exceed 125 f.p.m. Type C safety may be used if speed does not exceed 175 f.p.m. In any event, rope driven governors are not required. Check safety device type, based on car speed, and verify that the proper type has been used.

6.6.5.3 Drive Sheave or Drum. Traction or drum sheave wear is usually detected by finding metal particles under the sheave. However, an inspector should watch for the signs that lead to wear before results are seen. The major cause of wear is uneven rope tension. The sheave is designed to carry the load spread over all the ropes. When one is under more tension than the others, this load is transferred to the tighter rope. This can usually be seen by laying a straight edge across the ropes in the drive sheave grooves. All rope should touch the straight edge. Ropes that do not touch indicate uneven tension or possible sheave wear. Mistakes are found in the type of size of ropes used. Check date tags to verify proper application.

6.6.5.4 Guards. Many times guards are removed to service equipment and in haste are not returned to their proper place. A guard sitting off to the side is not doing its job and could result in a painful accident.

6.6.5.5 Gears and Bearings. A thorough check of the hoistway machine gears and bearings should be made on each inspection trip. Problems in these areas do not happen overnight. If found early, they can greatly reduce repair cost and time. Bearing problems are detected by sound and/or heat. Gear problems are detected by examining wear pattern on the gear. This will show that the gear is not properly aligned with the worm causing contact in an improper position, or that the gear is bottoming or contacting the worm shaft. Excessive heat damage, most likely caused by low oil or break down of oil, can also be detected. It is indicated by pock marks in the face of the gear tooth or teeth.

6.6.5.6 Hoist Motor. It is very important to check the hoist machine motor. Commutator or slip ring damage Are indications that something is not right and needs immediate attention. Become very familiar with these signs and be constantly on the look-out for them. Elevator performance is directly related to good electrical continuity throughout the commutator or slip rings. Also, heat is always a major concern and is a problem indicated. The source of the heat should be investigated and corrective action recommended. Motors should be kept clean to assure proper air passages that are needed for cooling. Connections not properly made may result in poor electrical conduction and points of resistance. This condition creates heat. Improper adjustments can force motor windings to carry more current, which produces heat, thus causing insulation deterioration.

6.6.5.7 Brake. Closely examine both the mechanical actions of the brake and the electrical components. The A17.2 Manual addresses the examination of the mechanical action. As for the electrical components, the brake coil leads, connections, and windings should be examined to check insulation conditions and physical connections. In addition, many brakes have electrical contacts that are used in various control functions. These should be checked to assure proper contact operation, insulation on wire and contacts, and condition of connections. Many control systems, by design, stop the elevator electrically when it reaches the floor, which allows the brake to set. This is done to prevent a bump on stopping, which is caused when the brakes set. Brake operation should be checked, where applicable, to see that the feature is working properly.

6.6.5.8 Controls. The A17.2 Manual outlines a complete inspection of the control equipment. A good preventative maintenance program on the control equipment will greatly reduce shut downs.

6.6.5.9 Housekeeping. The overall machine room should never be overlooked. The A17.2 Manual lists each area to be checked. It reduces the possibility of accidents and has a direct impact on fire safety. Proper ventilation is required to keep equipment operating. Inclined elevators are often exterior to buildings and subject to weather. All components should be checked for rusting and other deterioration. Provisions should be provided for machine room heating to a minimum of 40 degrees F. Machine room access door hardware is very often found not meeting all requirements of the A17.1 Code. In addition, Navy policy is that the machine rooms have controlled access areas to be secured by lock and key or combination locks. Machine rooms and machinery spaces are not to be used for storage of non-elevator related items. Absolutely no flammable items are permitted.

6.6.5.10 Machine Room Access. Access to machine room and machinery spaces must always be checked. Not only to assure that the usual ladders, stairs, lights, railings, etc. are kept in first class condition, but to be sure that the access is not infringed on by building changes. Safety may be directly dependent on rescue personnel getting to the elevator equipment in a hurry.

6.6.6 Periodic Inspection And Tests

6.6.6.1 Scope. The A17.1 Code indicates that inclined elevators are subject to routine and periodic tests (Rule 1010.7) at intervals not less than 6 months. Procedures and methods described in the A17.2 Manual for electric elevators should be applied when inspecting inclined elevators. Testing data should be specifically documented on the inspector's report that these test have been performed and the dates the tests were made.

6.6.6.2 Governor and Safety. Division 111 of the A17.2 Manual covers inspection of governors. Division 112 of the A17.2 Manual covers inspection and test of the car and counterweight safeties. This is a no load, slow speed test of the safety equipment. It is done to exercise the equipment to assure its proper operation. Full load tests are outlined in Division 113.

6.6.6.3 Buffers. Division 114 and 115 of the A17.2 Manual covers buffer tests.

6.6.6.4 Normal and Final Limits. Division 116 of the A17.2 Manual covers the operational test of normal and final terminal stopping devices. The limits only receive a functional test during routine inspections. The annual test requires setting conditions that will require the limits to operate as they would if conditions warranted.

CHAPTER 7

ESCALATORS

7.1 INTRODUCTION

NOTE: Paragraphs identified with a vertical line in the left margin are inspections that should be made by Inspectors only.

7.1.1 Scope

The inspection of escalators included in this chapter is not only an inspection of all safety related functions, but is also an inspection to determine the condition of the equipment and identify areas that need improvement. Proper maintenance is needed to keep the escalator operating. When preventive maintenance is lacking, shut downs will occur. Part III of the ANSI/ASME A17.2 Inspector's Manual for Elevators and Escalators addresses the safety aspect of the inspection of escalators. In this chapter we will identify the specific Division of Part III which relates directly to the inspection procedure being followed in this text. It is intended that each noted division should be reviewed as it is identified and suggested procedures followed. The maintenance and performance considerations of the inspection will be addressed in the following text. See Figures 7-1, 7-2, and 7-3 which show various escalator arrangements with component names that will be used in this chapter.

7.1.2 Performance Criteria

As was stated previously, the purpose of this type of inspection is to review the entire escalator installation; this includes measuring the operation of specific elements of the system against standards which have been established either by national codes or engineering practice common to the escalator industry. The components of the system selected for testing are those most directly related to safe operation of the escalator and the overall installation, although some items, such as speed of the escalator, are related to the efficiency of the operation and grade of service provided. The following is an explanation of the areas that should be tested and criteria to use for evaluating this performance.

7.1.2.1 Escalator Operating Speed. Escalator operating speed is measured with a tachometer held against the deck while riding on the unit. operating speed should be maintained at a level of plus or minus 5% of the speed under any load condition in both directions of travel. A second speed test should be performed by holding a tachometer on the handrail while standing at the top or bottom landing. Both handrails and the step speeds should be very close. A speed variation might indicate a condition of handrail slip.

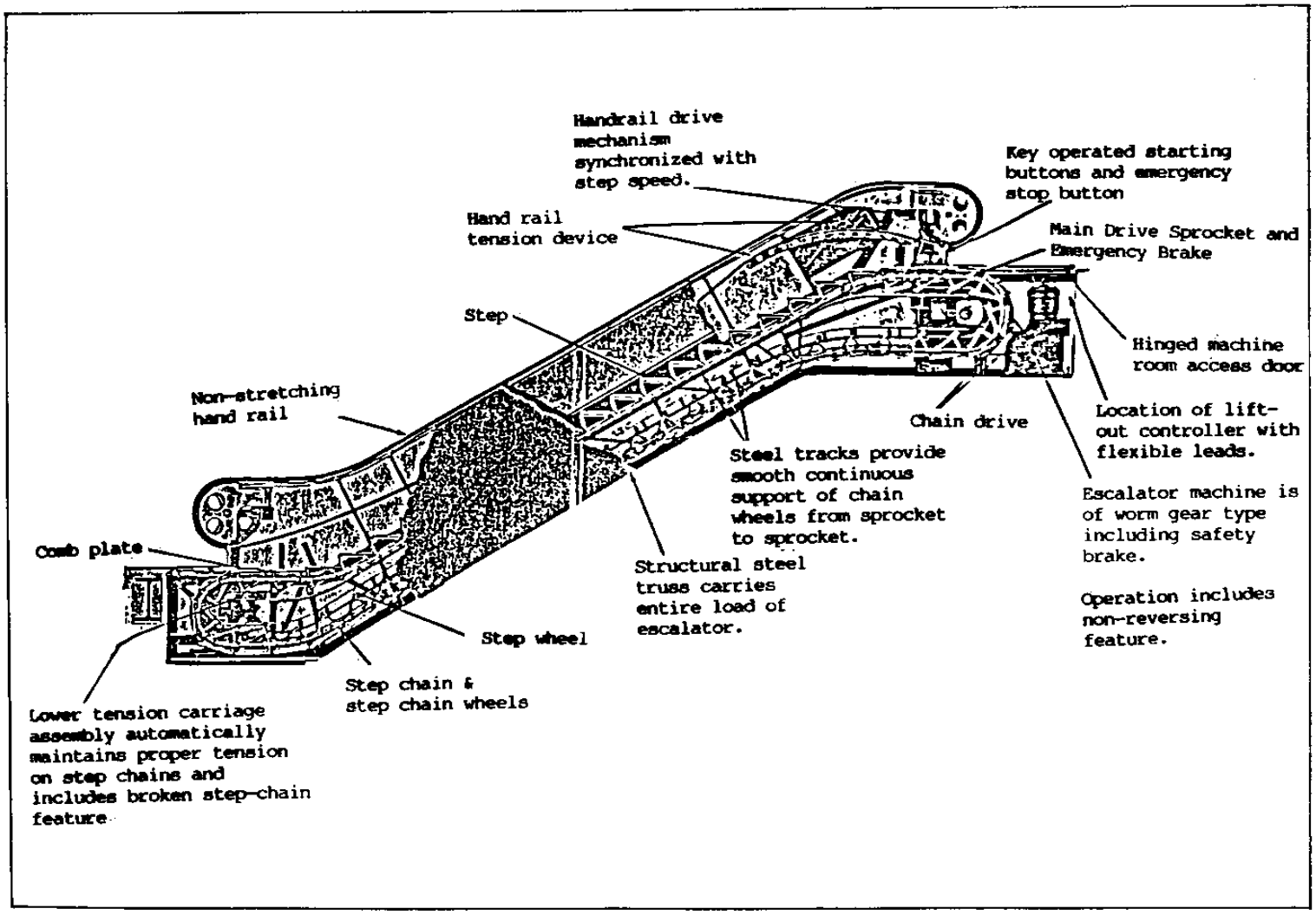

FIGURE 7-1
Typical Escalator Assembly

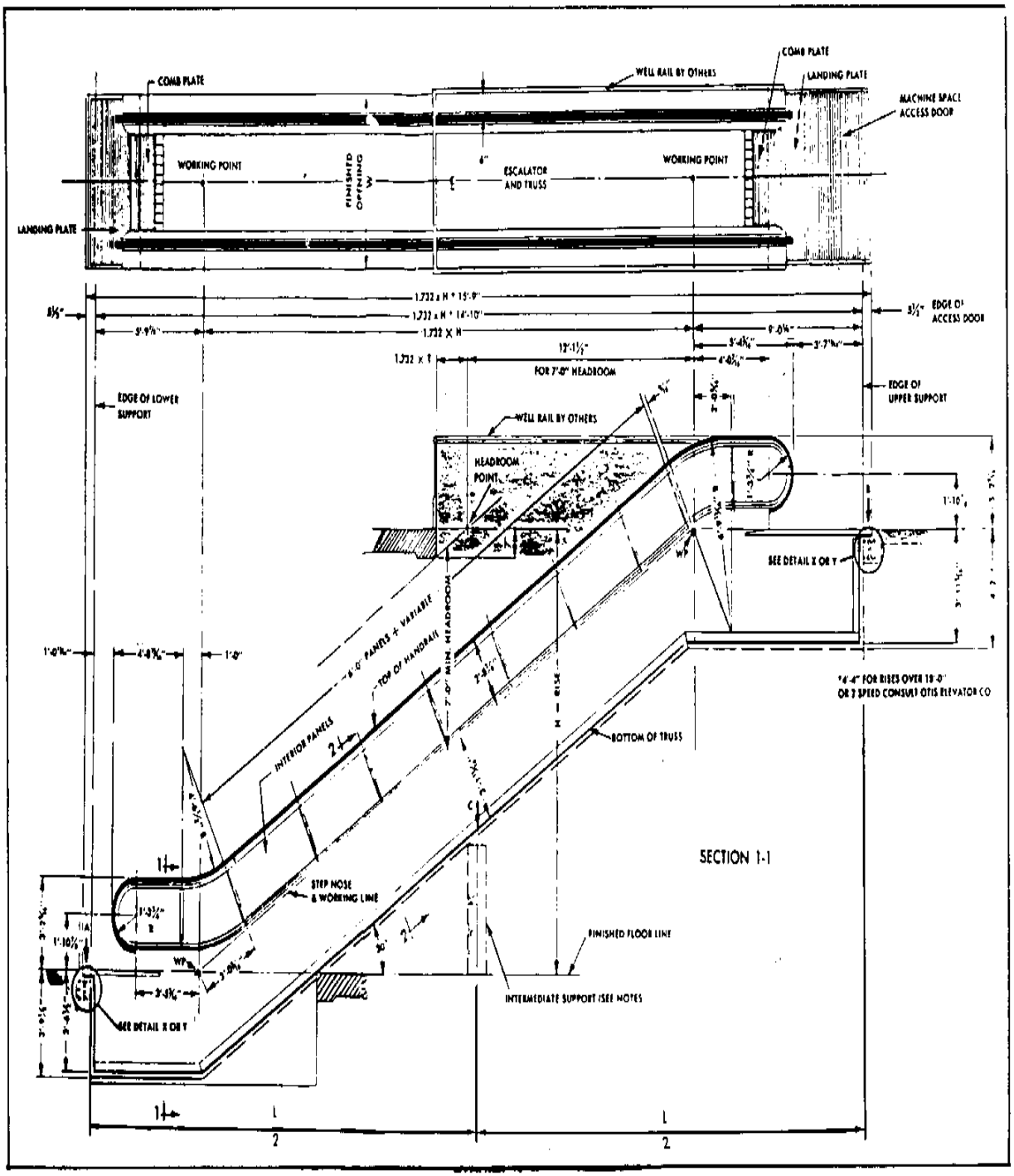

FIGURE 7-2
Typical Escalator Installation
With Metal Interior Panels

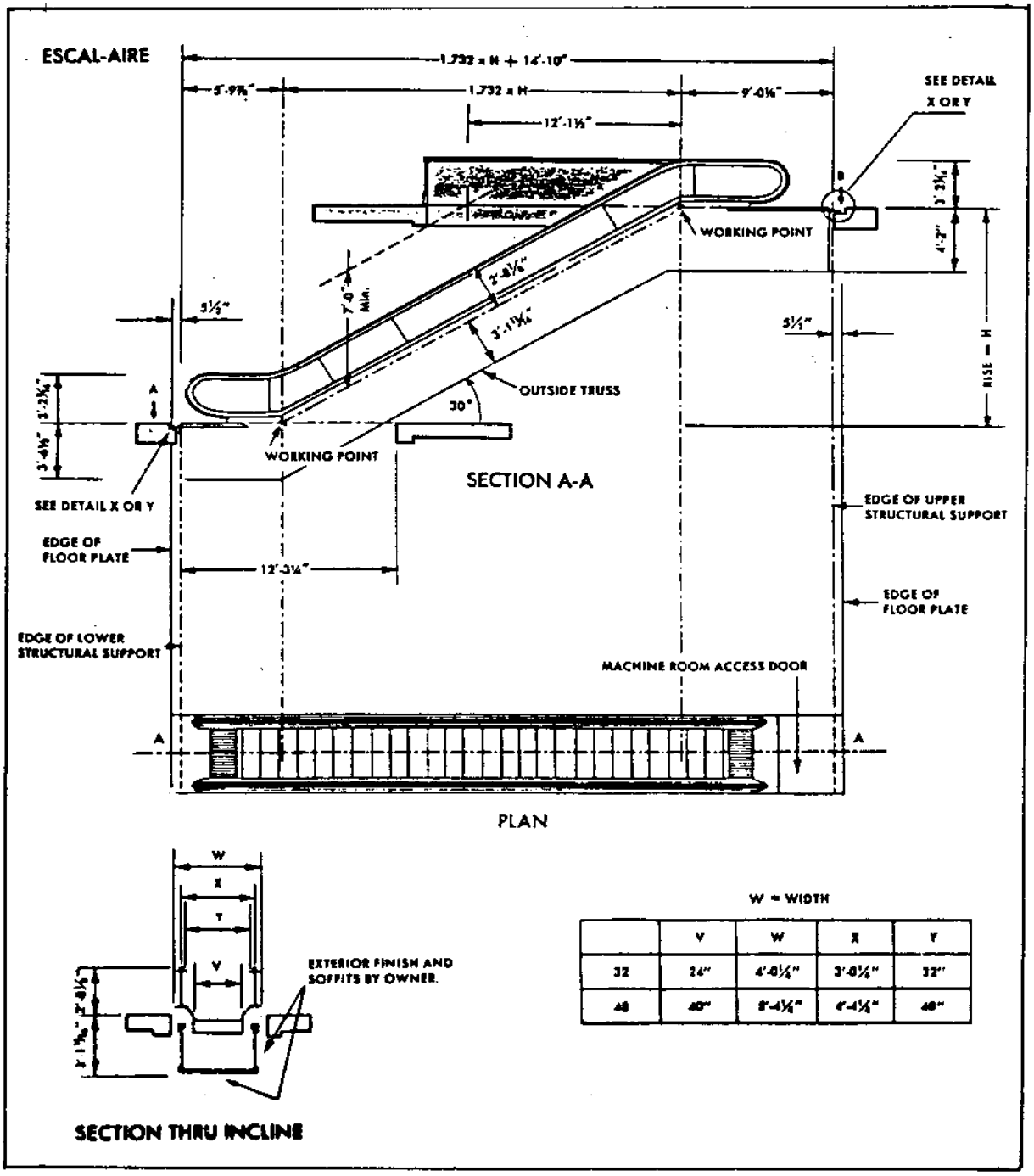

	V	W	X	Y
32	24"	4'-0¼"	3'-0¼"	32"
48	40"	5'-4¼"	4'-4¼"	48"

FIGURE 7-3
Typical Escalator Installation
With Glass Interior Panels

7.2 ROUTINE INSPECTION

7.2.1 Scope

Division 300 of the A17.2 Manual covers inspections made on the escalator exterior. This section of the A17.2 Manual is quite complete and covers the majority of the items to examine. However, the inspector must also check to see that all operating equipment is functioning in its intended manner and that the appearance is acceptable to the rider.

7.2.2 Balustrades And Guards

Note any cracked or broken balustrade panels or ceiling intersection guards. Also note any screws or fasteners used to hold panels or molding that are not flush or that have burrs. Ceiling intersection guards should conform to dimensions shown in Figure 7-4. Check to see that anti-slide devices are provided on decks where required for equipment installed under the 1981 and later editions of the Code.

7.2.3 Handrails

The handrails should be inspected, paying close attention to all splices and joints. Splices or joints that open up can cause severe finger pinch as the handrail goes around the newel. Handrails should move in the same direction and at substantially the same speed as the steps. Handrail tension should be checked by grasping a handrail, on a down running escalator, from the top landing. If it takes a great amount of effort to stall the rail, the tension is correct. If the handrail can be easily stalled then it should be readjusted.

7.2.4 Step Treads And Risers

The escalator step treads and risers should be checked for broken corners, worn surfaces, oil or debris. They should also be checked for excessive play in both directions of travel and from side to side. Check clearance on units without cleated step risers (installed prior to 1971 edition of the code). A clearance in excess of 5/32" may indicate worn chain pins and bushings and require step chain replacement.

7.2.5 Combplates

Inspect the combplate and note any damaged or missing combplate teeth. The combplate teeth should mesh evenly with the step-treads and the bottom of the teeth should be below the upper surface of the steps. Damaged combplate teeth are very hazardous and should be replaced immediately.

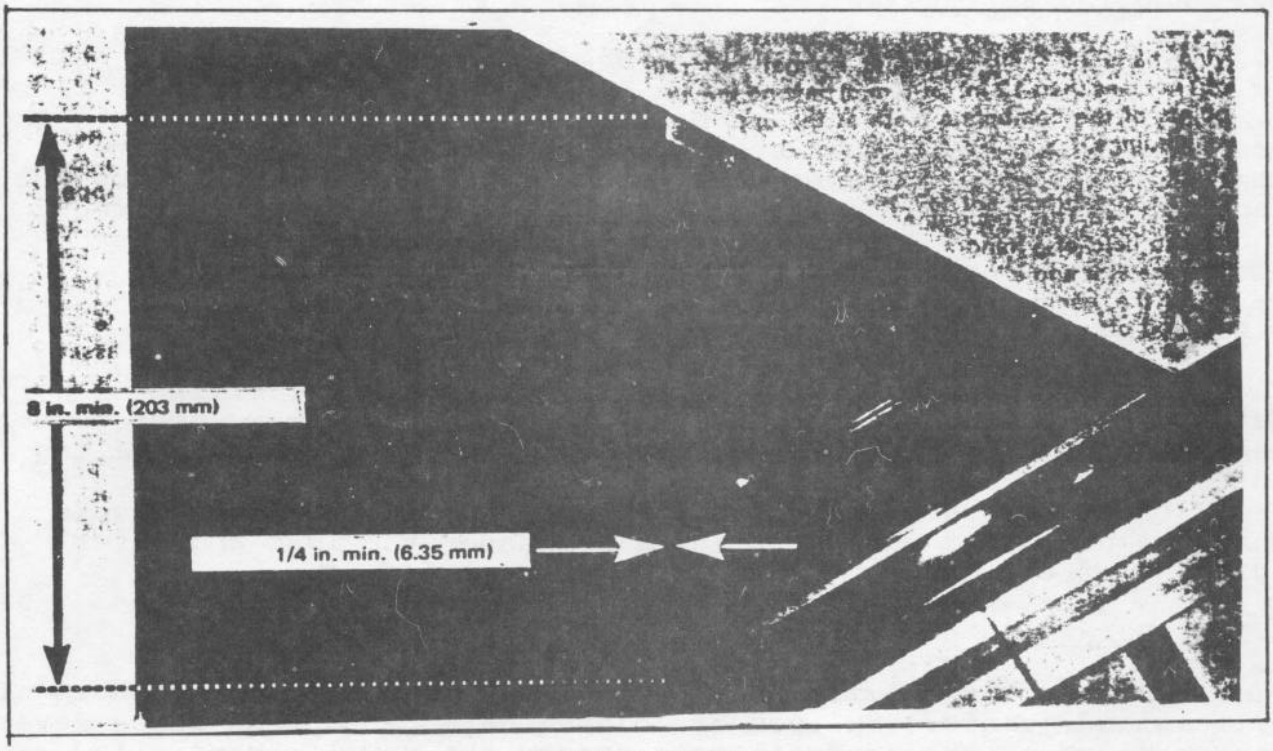

FIGURE 7-4a
Typical Guard At Flush Ceiling Intersection

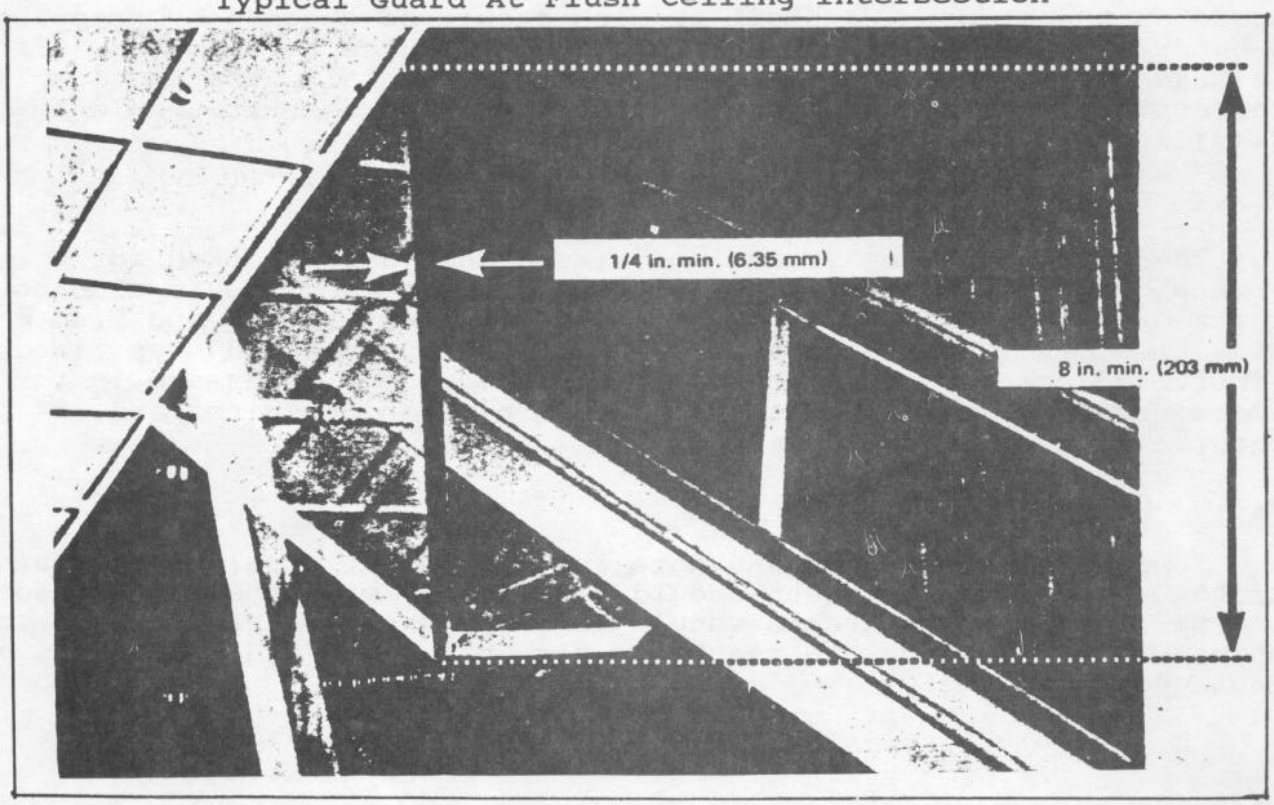

FIGURE 7-4b
Typical Guard At Offset Ceiling Intersection

7.2.6 Illumination

Determine whether lighting at the landing and for the entire step run is adequate and in accordance with local codes and ordinances for stairways. If combplate lights are furnished they should all be in working order. Two green step demarcation fluorescent lamp fixtures, at each landing, are required on equipment installed under the 1978 and later editions of the code.

7.2.7 Caution Signs

Caution signs should be located at the top and bottom landings for escalators installed under the 1981 and later editions of the Code, although it is suggested that signs be recommended on all escalators. See Figure 7-5. The sign should be readily visible to the boarding passengers and include the following wording:

"CAUTION"
"PASSENGERS ONLY"
"HOLD HANDRAIL"
"ATTEND CHILDREN"
"AVOID SIDES"

The sign shall be standard for all escalators and shall be identical in format, size, color, wording, and pictorials as shown is Figure 7-6. The sign shall be durable and have a maximum thickness of 1/4" (6.3 mm), with rounded or beveled corners and edges.

7.2.8 Operation

Check the escalator movement in each direction of travel for a smooth operation. Note any excessive noise or vibration and its location if possible. Check each emergency stop button in each direction and observe stopping distance.

7.2.9 Skirt Obstruction Device

Physically trip the switch for the skirt obstruction devices. Use a nonmetallic probe between the step and riser. This check can also be done after steps are removed for the interior inspection. See Figure 7-7. Actuation should cause the opening of the power circuit to the driving machine motor and brake.

7.2.10 Skirt To Step Clearance

Check the skirt panel for excessive clearance. See Figure 7-8. This can be done with a rule, feeler gauges or commercially available devices made especially for this purpose. The clearance between the step tread and the adjacent skirt panel is required to be not more than the distances noted in ITEM 300.4 of the A17.2 Manual.

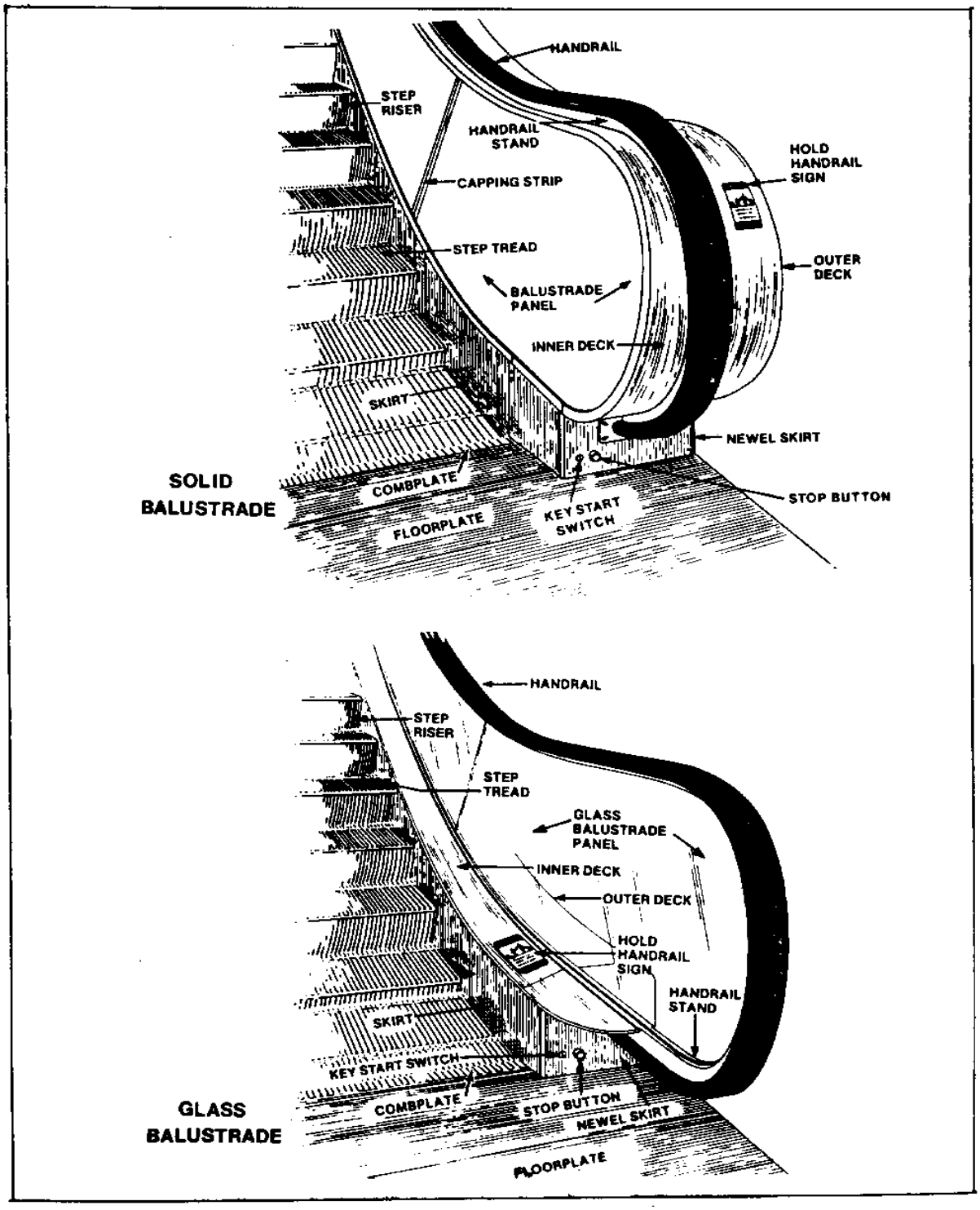

FIGURE 7-5
Typical Escalator Landing

FIGURE 7-6
Escalator Caution Sign

7.2.11 Start Switch

Check the key-operated switch in the run position. If the key can be left in the run position or removed in the run position, check that the emergency stop buttons will function properly and the escalator will not restart when the emergency stop buttons are released. Where automatic starting devices are provided, check that they are nonfunctional after the emergency stop buttons are released.

7.3 PERIODIC INSPECTION AND TESTS

7.3.1 Scope

Division 310 of the A17.2 Manual covers operational inspections and tests. It is required that these inspections and tests must be performed every 12 months.

7.3.2 Machinery Space

Permanent electric lighting and a 20 Amp ground type 110V duplex receptacle shall be provided in every remote machine room. The illumination shall be not less than 10 foot candles at the floor level. The lighting control switch shall be located within easy reach of the access to such rooms. Where practical, the light control switch shall be located on the lock jamb side of the access door. Where the machine is located in the truss, a permanent 20 Amp grounding type 110 V duplex receptacle accessibly located within the machine area of the truss shall be provided to accommodate a drop cord light. Determine whether the machinery space is clean and free of oil and debris.

7.3.3 Controls

Examine controller (See Figure 7-9) visually to determine that it is clean and that contacts of magnetically operated contactors and relays and the electrical connections thereto are in good condition. Determine that the fuses are in place and have not been jumped or otherwise tampered with. Where there is more than one driving machine in a room, check that each disconnect switch or circuit breaker is numbered to correspond to the number of the driving machine which it controls. Visually check the condition of the mechanical brake, if possible.

7.3.4 Wiring

All electrical wiring should be checked for damage. Many times conductors and conduits have become damaged when working in the area. This must be constantly inspected to maintain a safe environment.

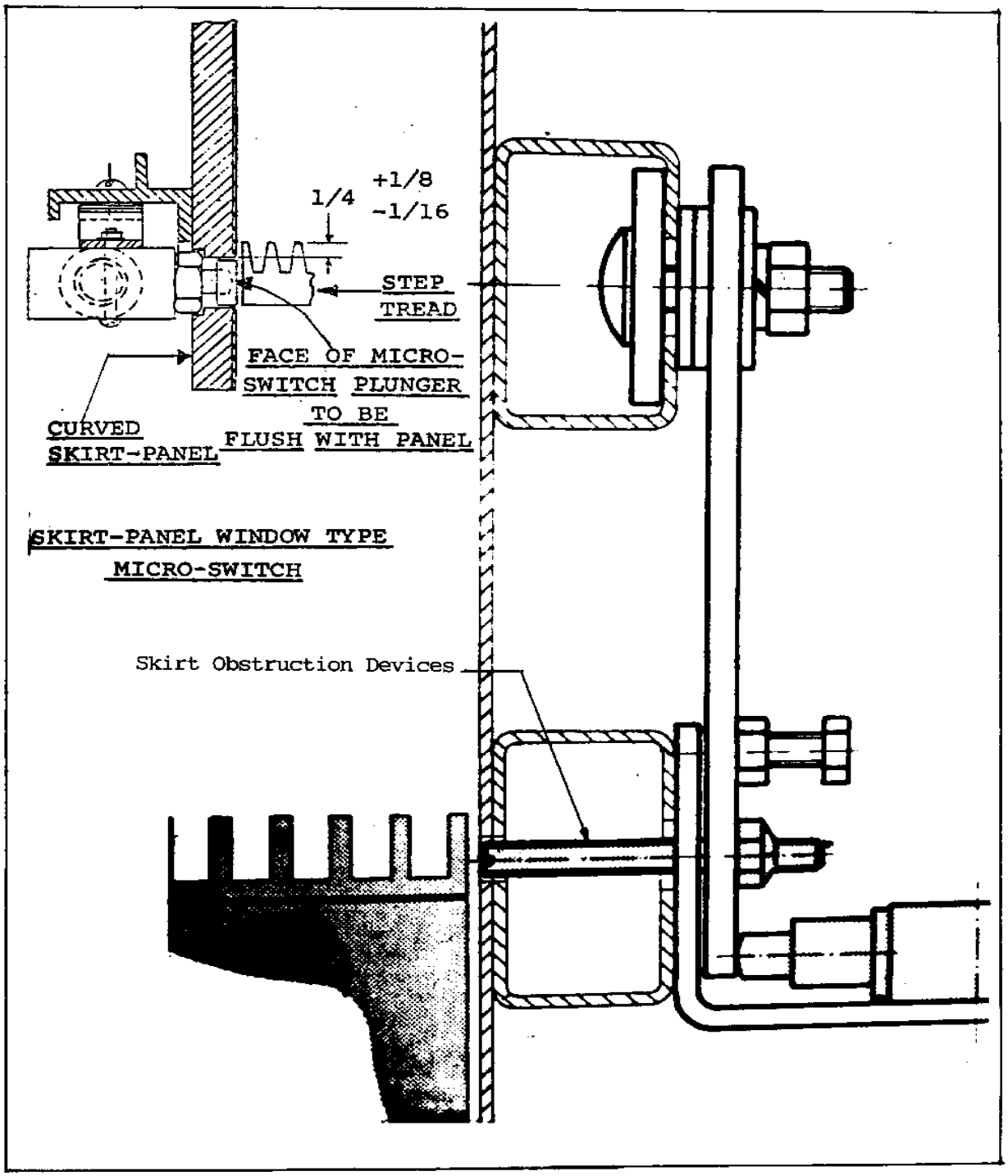

FIGURE 7-7
Typical Skirt Obstruction Devices

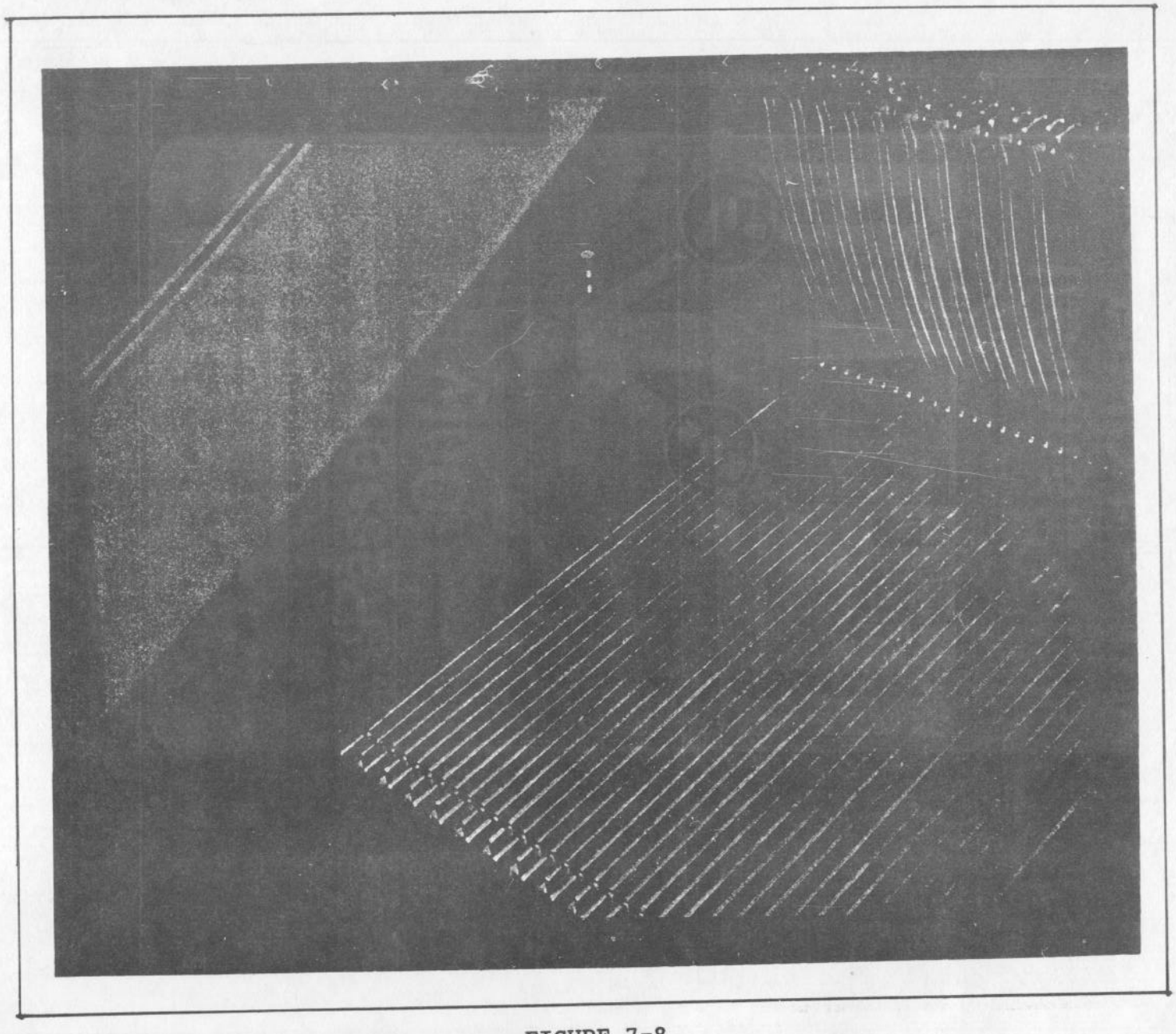

FIGURE 7-8
Step To Skirt Clearance

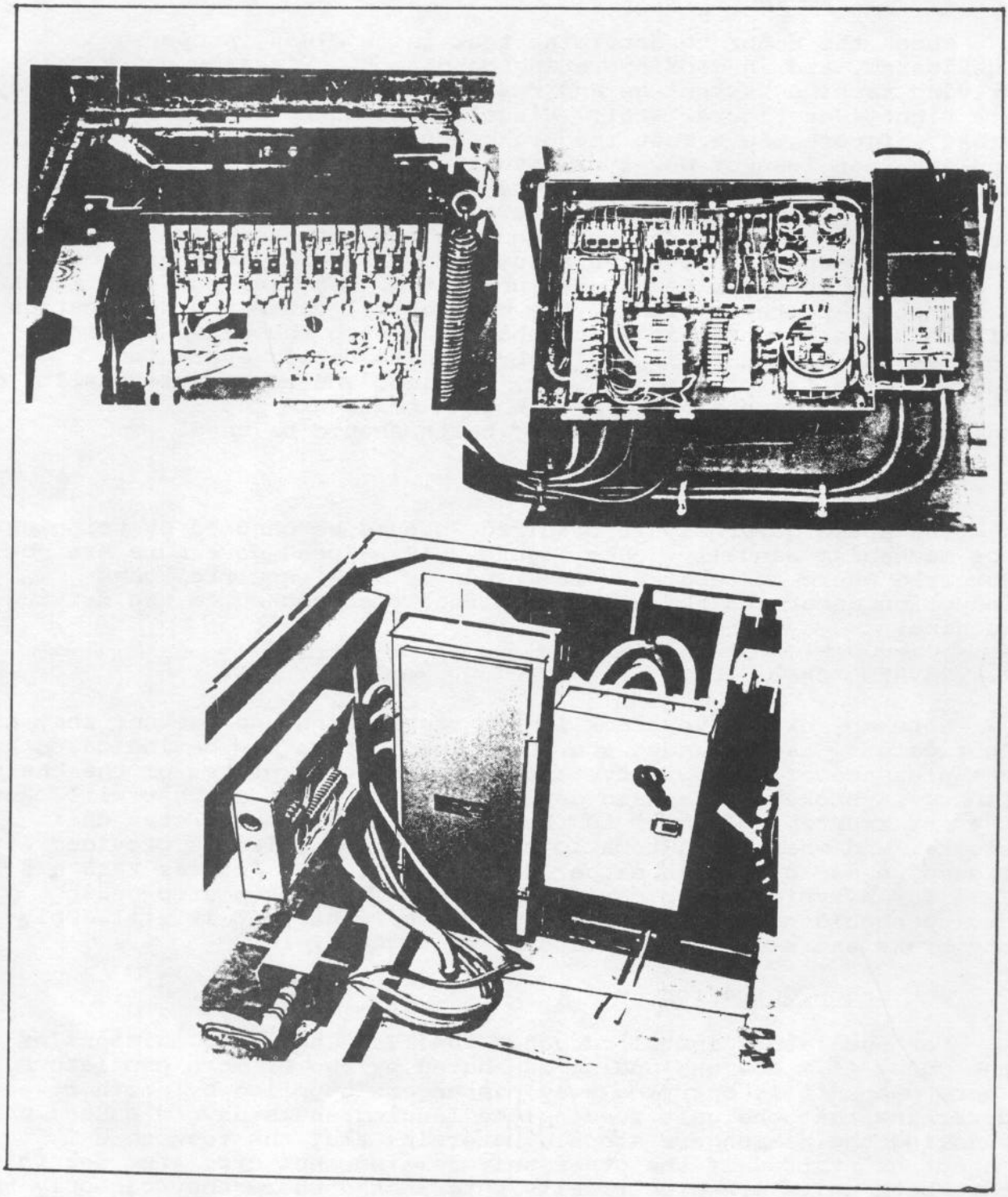

FIGURE 7-9
Typical Escalator Controllers
And Machinery Area

7.3.5 Drive Machine

Check the motor to determine that is clean, properly lubricated, and in good operating condition. Visually check the driving machine fastenings and bearing caps and determine that they are tight (See Figure 7-10). Visually check the condition of the brake, if possible. Test the brake application to determine that it applies upon loss of power or actuation of the safety devices. Also note any excessive backlash in the driving gears. If a chain is used to connect the driving machine to a sprocket on the main drive shaft, note whether there is adequate, but not excessive slack in the driving chain. Note the adjustment of the broken-chain device and whether chain or gears are lubricated. See Figure 7-11. If the drive chain parts or breaks, the device will cause the application of the brake on the main drive shaft and stop the drive machine. operate the broken-chain device by hand to verify operation. Inspect V-belts for damage, wear, tension, and reasonable quality of tension among members of a set. When V-belts are replaced in multiple drives, a matched set of belts should be used.

7.3.6 Speed Governor

The speed governor, if required, should be checked by tripping the mechanism manually. See Figure 7-12. Speed governors are not required where an escalator is driven by an AC squirrel cage induction motor and the motor is directly connected to the driving machine.

7.3.7 Step Chain

Note any excessive slack in the step chains and whether they are lubricated. Lack of adequate chain lubrication may be indicated by the presence of a red rusty deposit on the side plates of the chain links. A broken step-chain device shall be provided that will cause the interruption of power to the driving machine if a step chain breaks, and where no automatic chain tension device is provided (if excessive sag occurs in either step chain). See Figures 7-13 and 7-14 for a typical step chain assembly. The broken step-chain device should be operated by hand to determine that it will apply the brake and stop the escalator. See Figure 7-15.

7.3.8 Tandom Operation

For escalators installed under the 1981 and later editions of the Code, if a common landing is shared by two or more escalators, where one unit is carrying away passengers,supplied by another, determine that the unit feeding the landing shuts down when the unit removing the passengers stops. Determine that the feeding unit cannot be started if the other unit remains shut off. Also determine that both units are electrically interlocked where they can only run in the same direction.

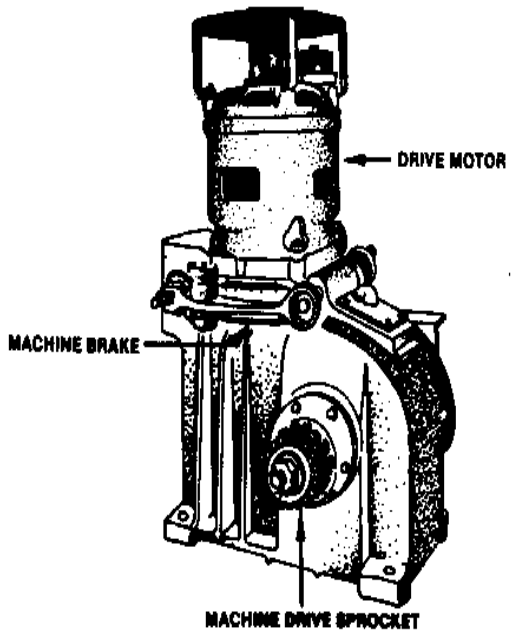

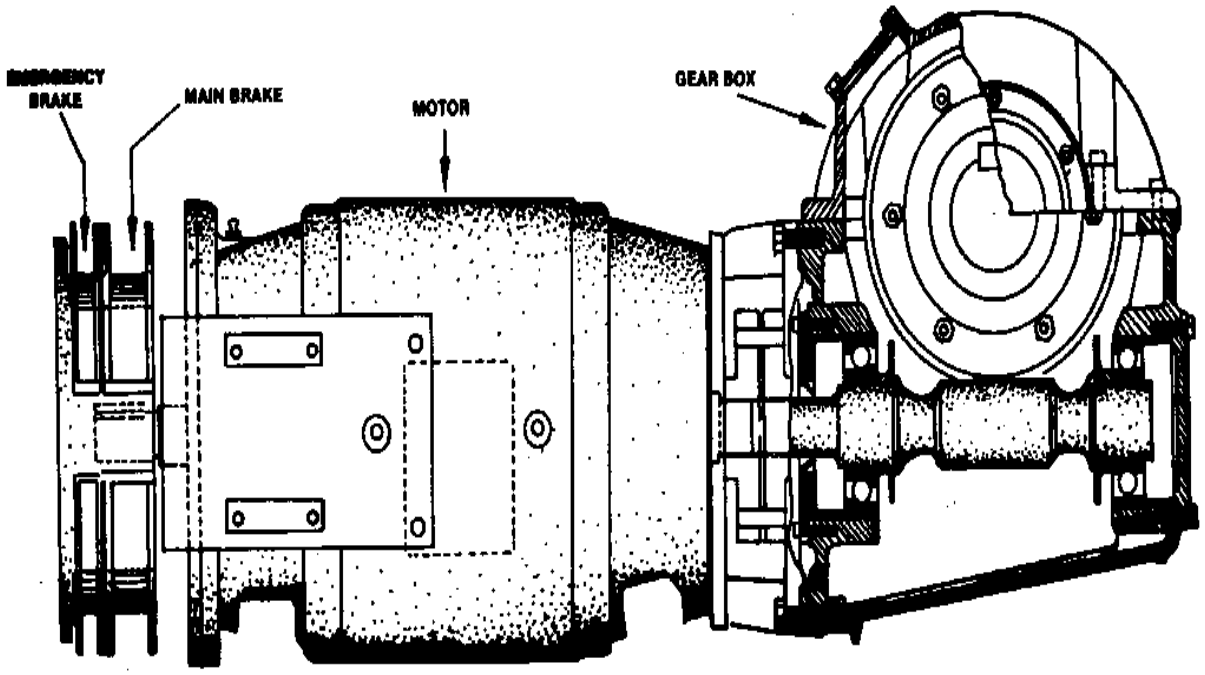

FIGURE 7-10a
Typical Escalator Drive Machines

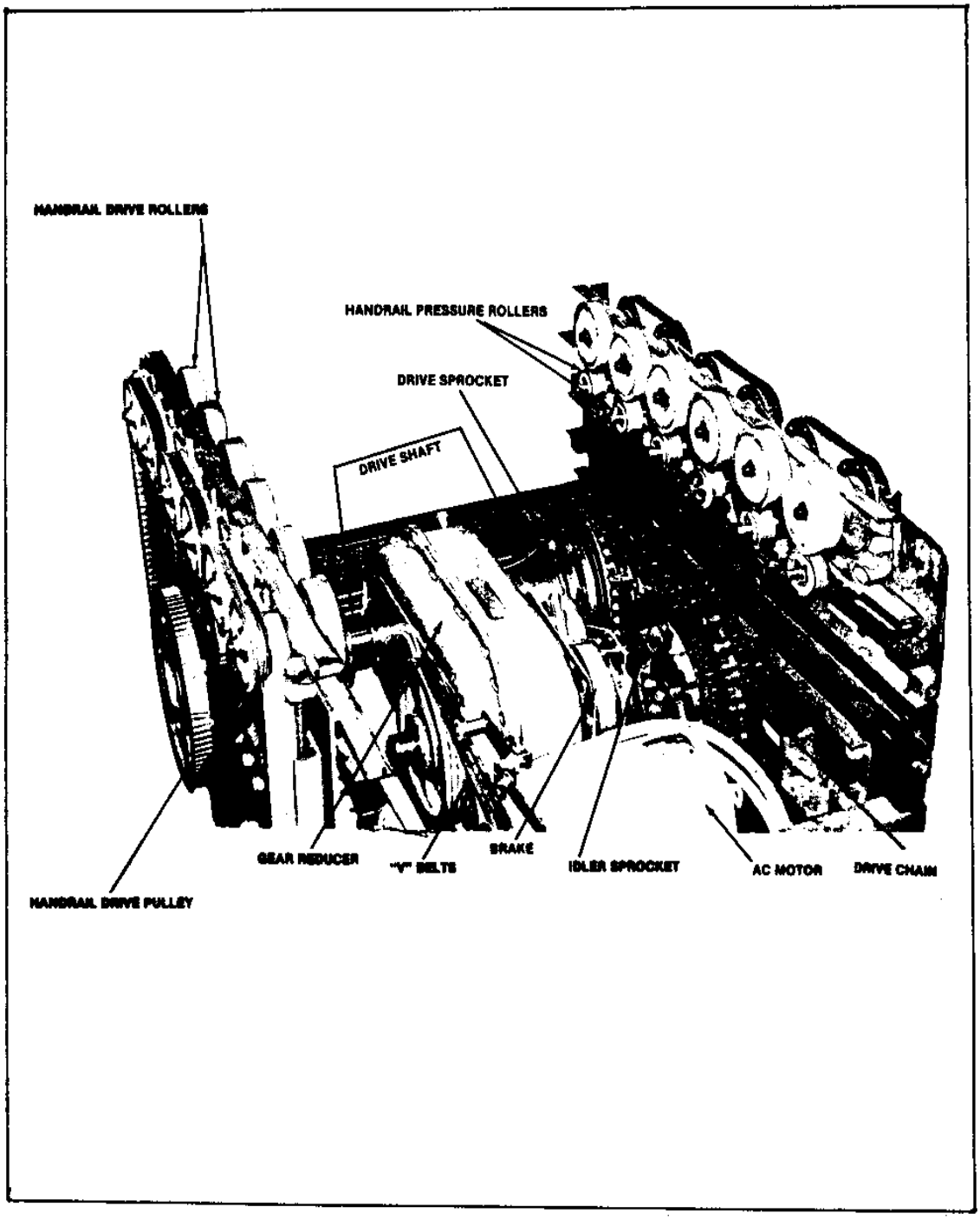

FIGURE 7-10b
Typical Escalator Drive Machines

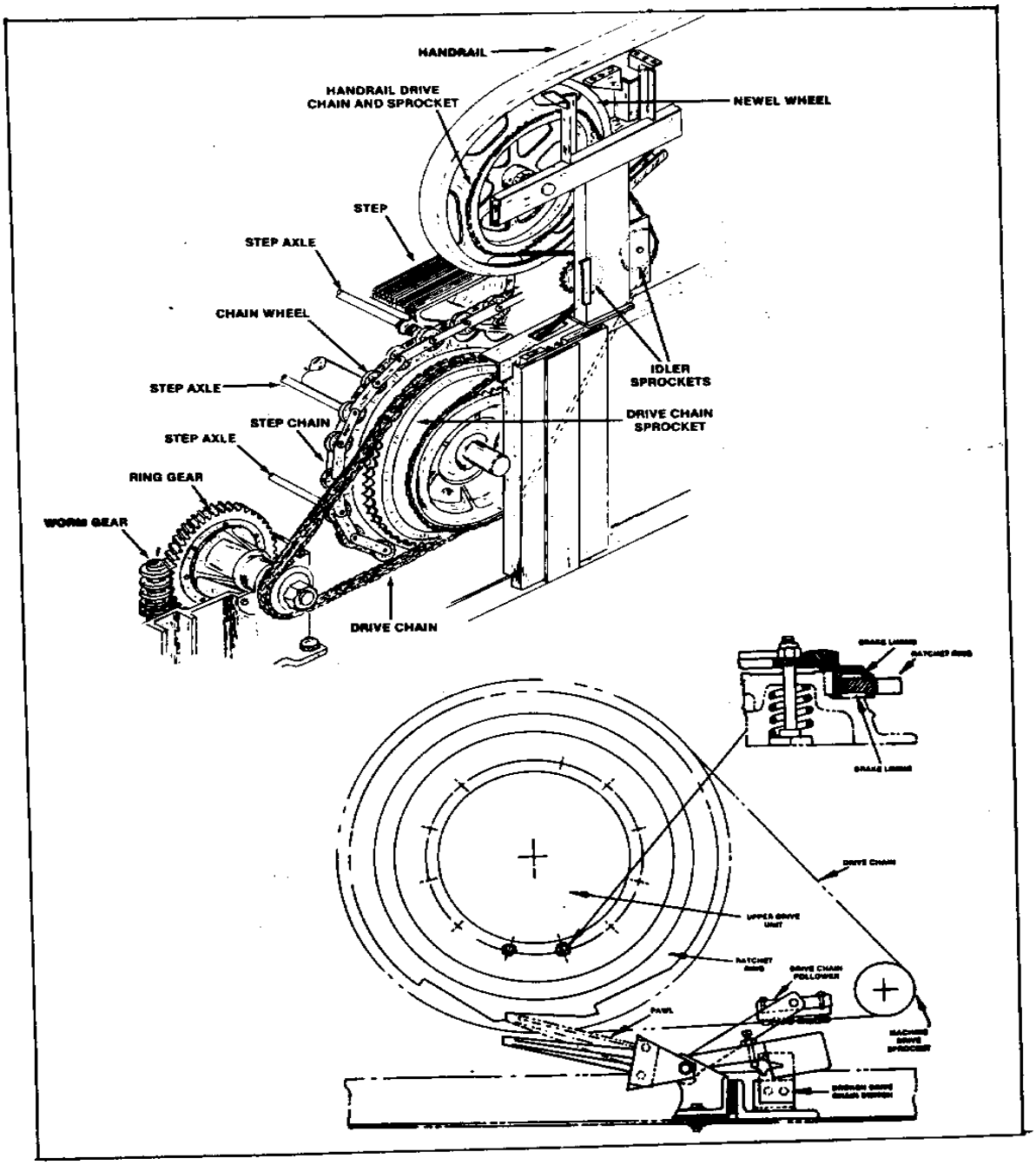

FIGURE 7-11
Typical Escalator Chain
Driven Sprocket Assembly

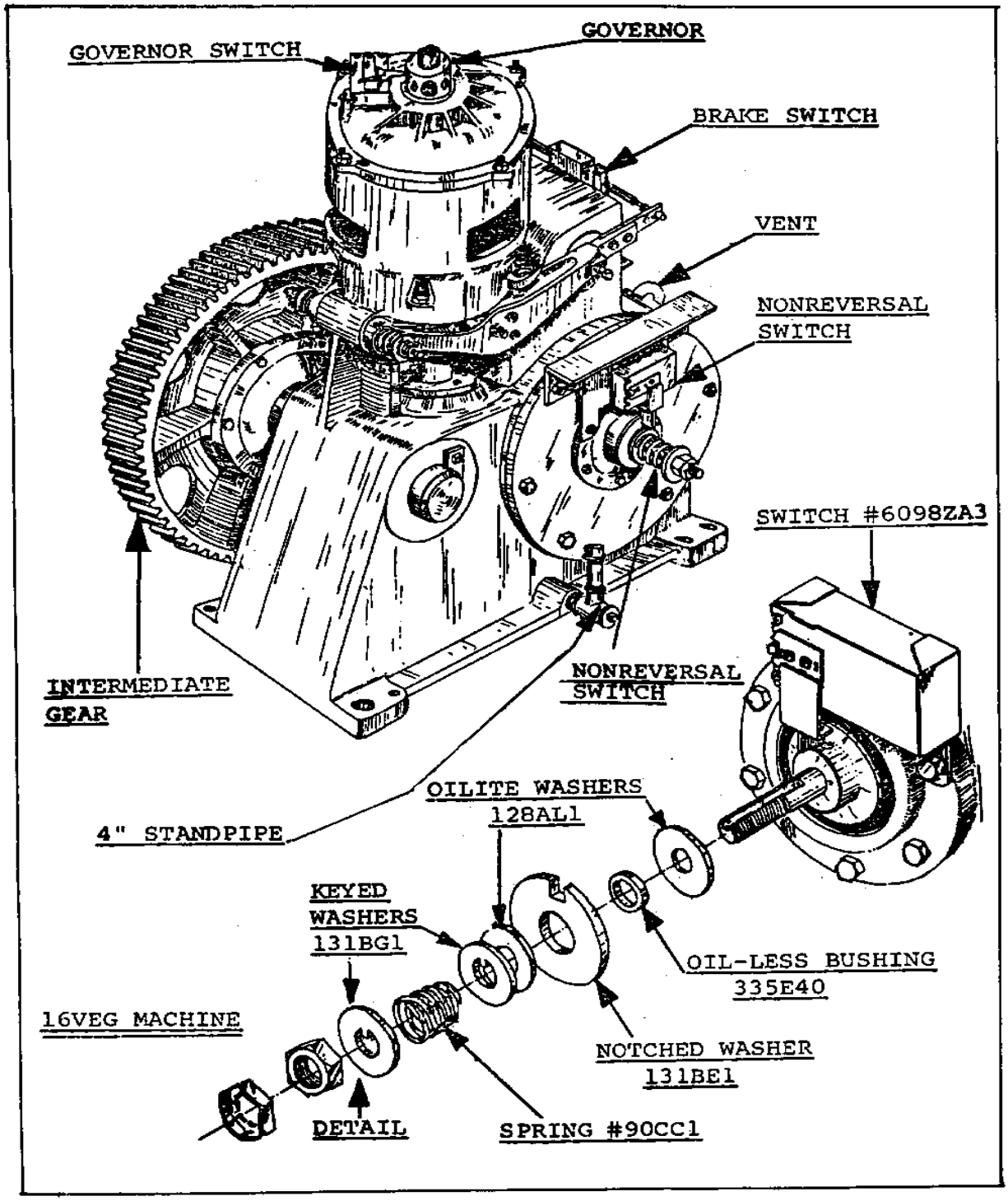

FIGURE 7-12
Typical Escalator Drive Machine

7.3.9 Step Upthrust Device

Test the step upthrust device, (See Figure 7-16) for escalators installed under the 1980 supplement and later editions of the Code, as follows:

a. Barricade the escalator to prevent access by unauthorized persons.

b. Stop the escalator, open the mainline and remove one or more steps. After this test a thorough examination of the interior of the escalator can be made before the steps are installed.

c. Run the escalator until the step above the missing one is located on the lower curve and then stop it by pressing the stop button.

d. Open and lock out the main disconnect switch to remove all power and remove the controller from the escalator truss.

e. Connect a circuit continuity tester, such as an ohmmeter, across the safety control circuit. If all safety devices are set correctly, there will be continuity in the circuit.

f. Depress the emergency stop button and check the circuit continuity tester to see if the continuity was broken when depressed and reestablished when the button was released. This will confirm that the stop button is part of the safety circuit and functioning properly.

g. Lift up on the riser of the step located on the lower curve so that the step comes into contact with the upthrust tract. Determine that the safety circuit continuity is broken and is reestablished when the step riser is released. This will confirm the mechanical integrity of the upthrust device as well as its electrical function with the electrical control circuit.

h. Since the emergency stop button was used earlier to stop the escalator, and its operation was checked to confirm that it, like the step upthrust device, breaks the continuity of the safety circuit, the ability of this circuit to remove power from the escalator motor and brake has been demonstrated.

i. Remove the circuit continuity tester and replace the controller and step.

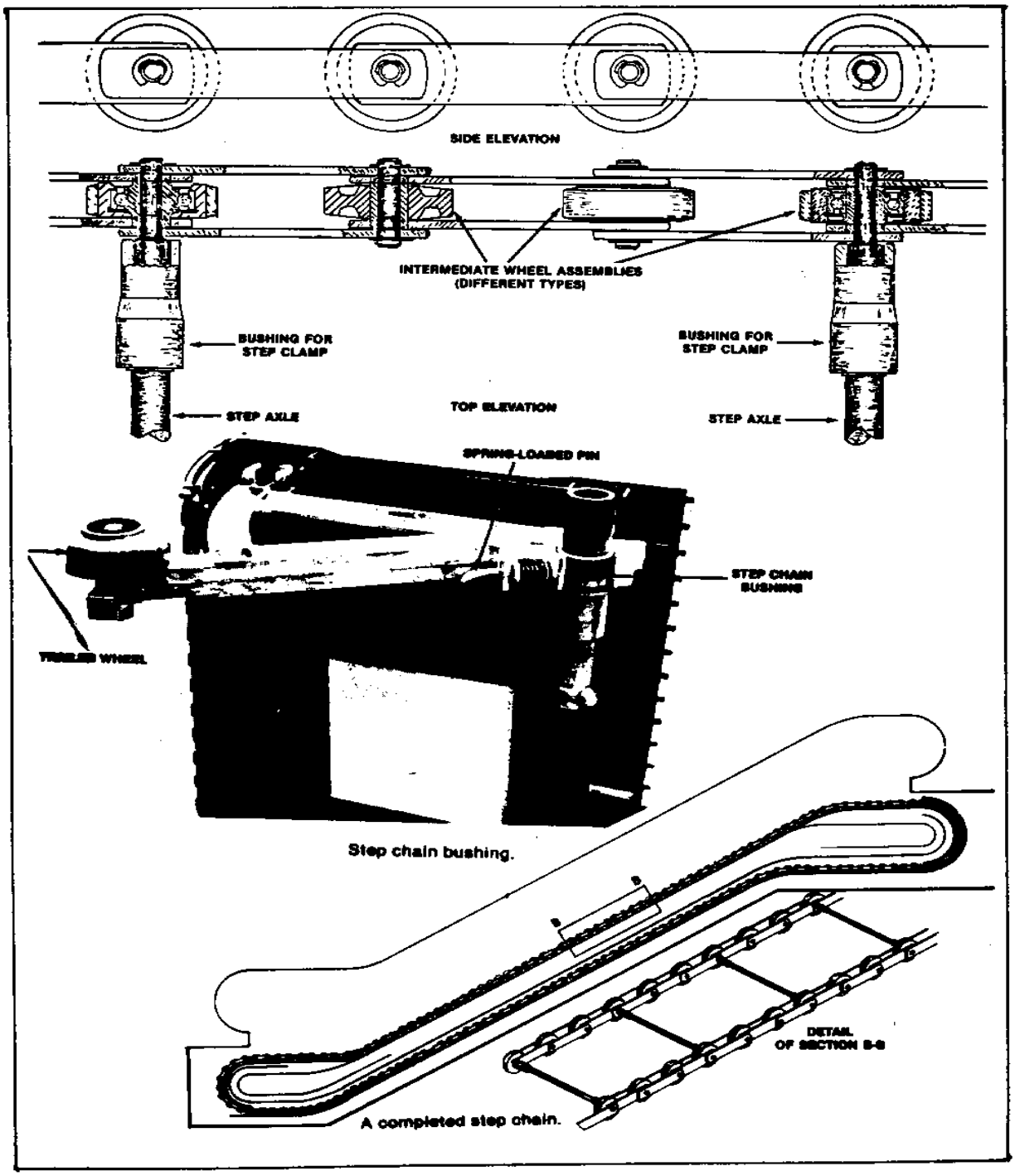

FIGURE 7-13
Typical Escalator Step Chain

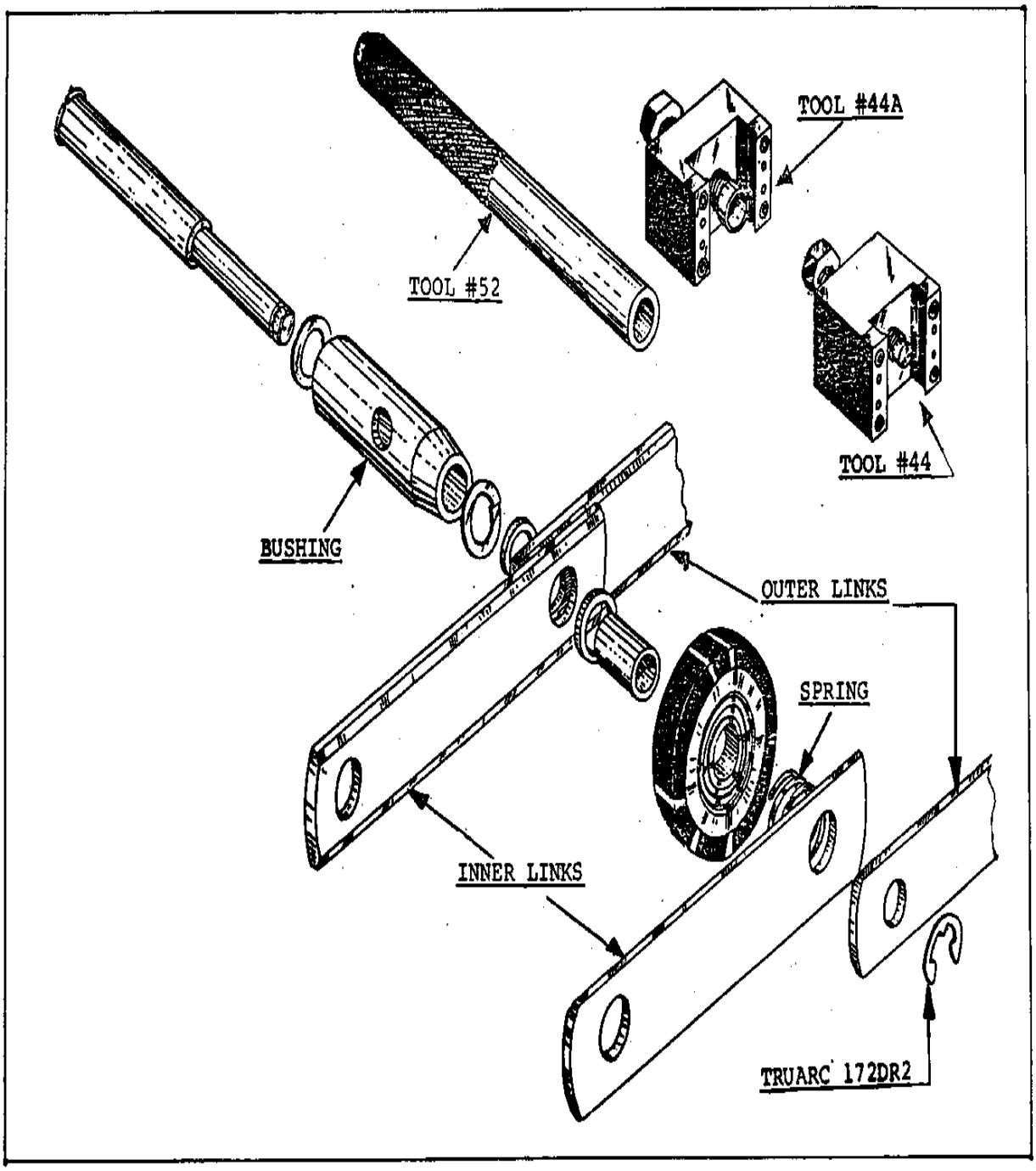

FIGURE 7-14
Typical Step Chain Detail and Special Tools

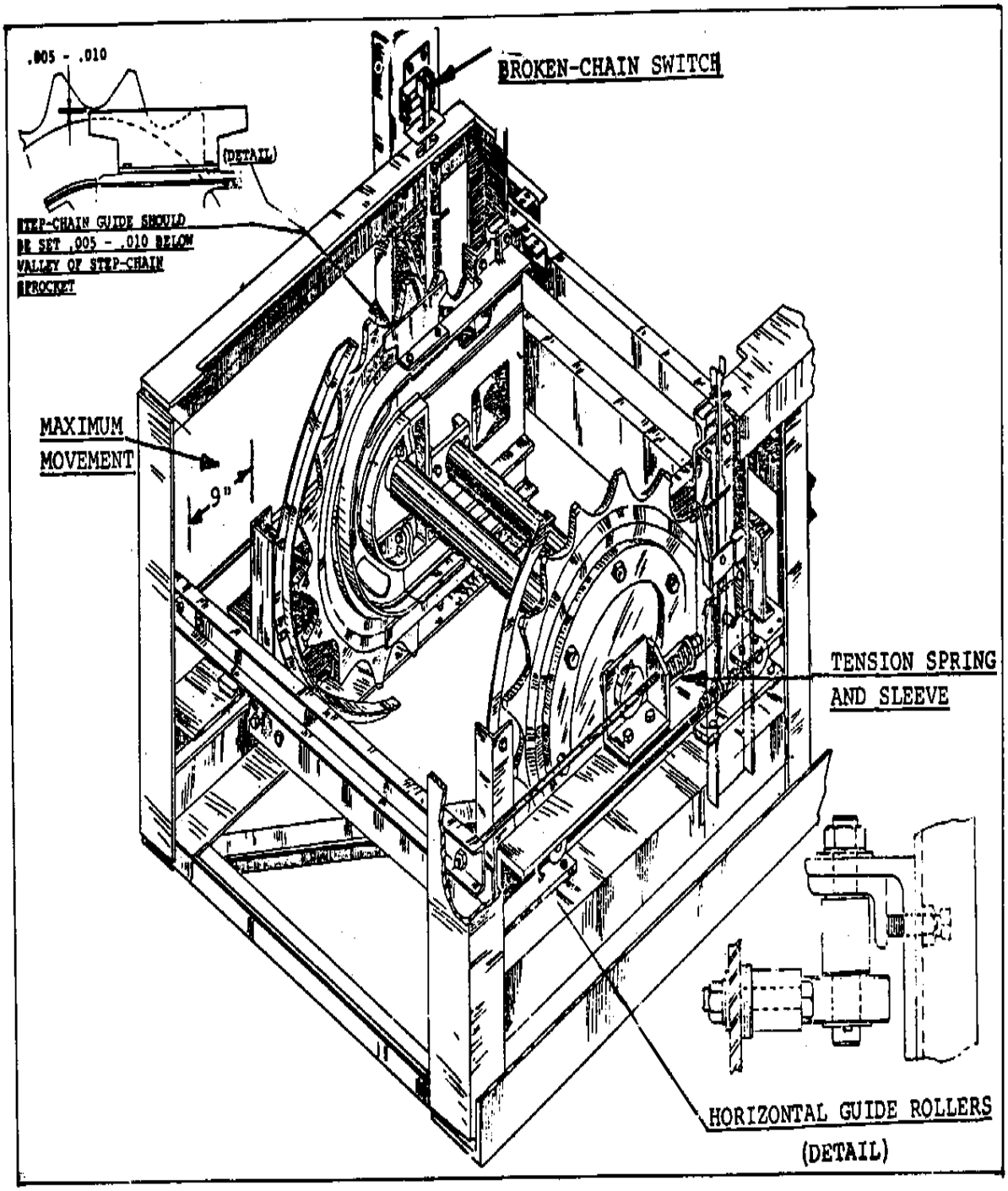

FIGURE 7-15
Typical Chain tension Carriage

7.3.10 Rolling Shutters

Where rolling shutters are used to protect floor openings, test the operation of the shutter both manually and automatically (sensing devices should be checked as outlined in Item 117.1a(7), note 2 of the A17.2 Manual). Check the manual means, such as a hand crank, and determine that is readily accessible and visible. If power operated, test the operation of the sensitive leading edge of the shutter to determine that application of a force not exceeding 20 lbs. will stop the shutter and cause it to reverse for a distance of approximately 6 inches and that following the removal of the force, the shutter will resume its closing motion until the opening is fully closed on this test, the initial movement of the shutter should cause the power circuit to the escalator driving motor and brake to open and stop the escalator and prevent its further operation until the shutter is fully retracted. The reason that the escalator must be stopped is to prevent the bunching of people at a closed rolling shutter. With the escalator shut down, people could walk and not be trapped because the unit was running up. See Figure 7-17 for a typical rolling shutters application.

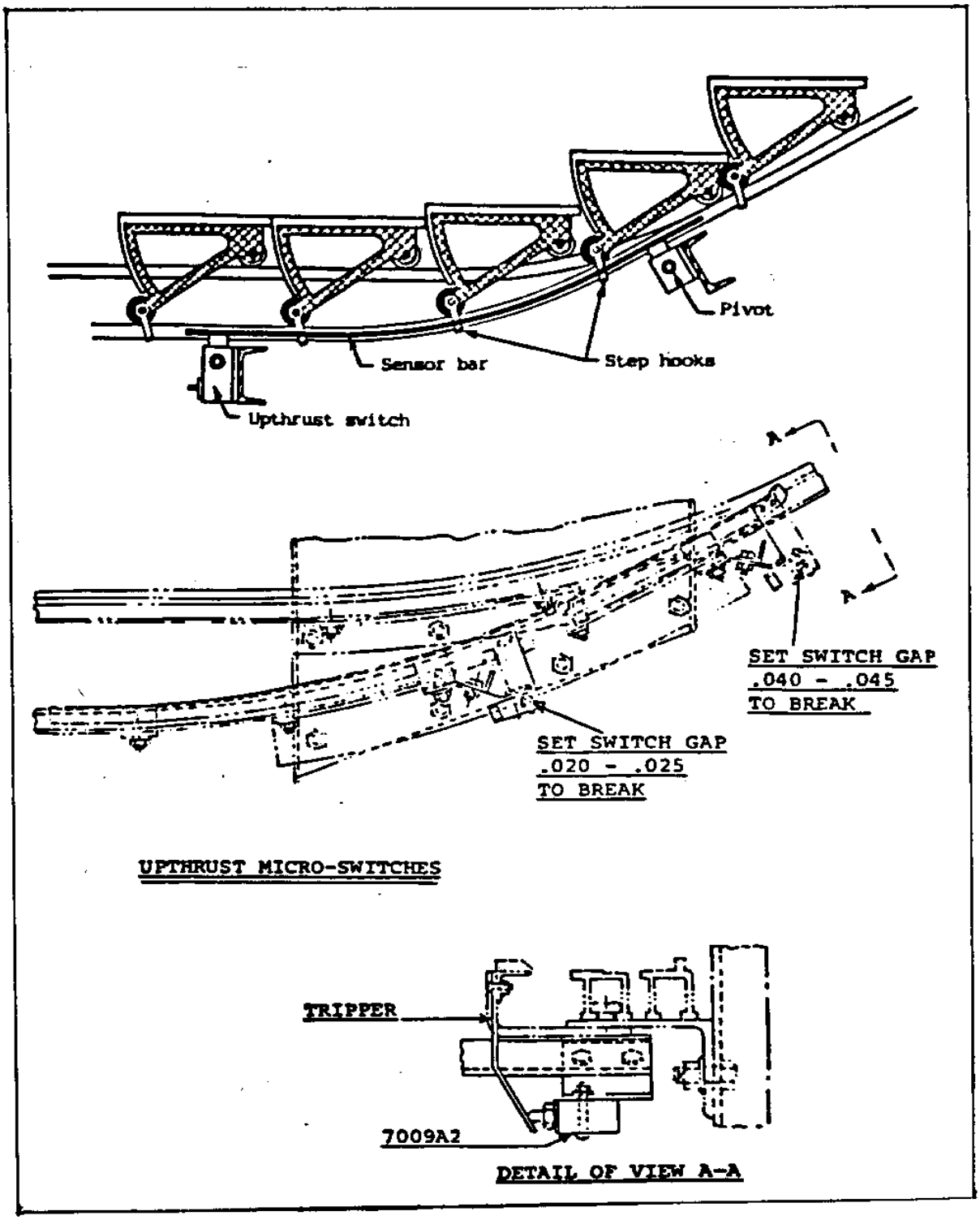

FIGURE 7-16
Typical Step Upthrust Detail

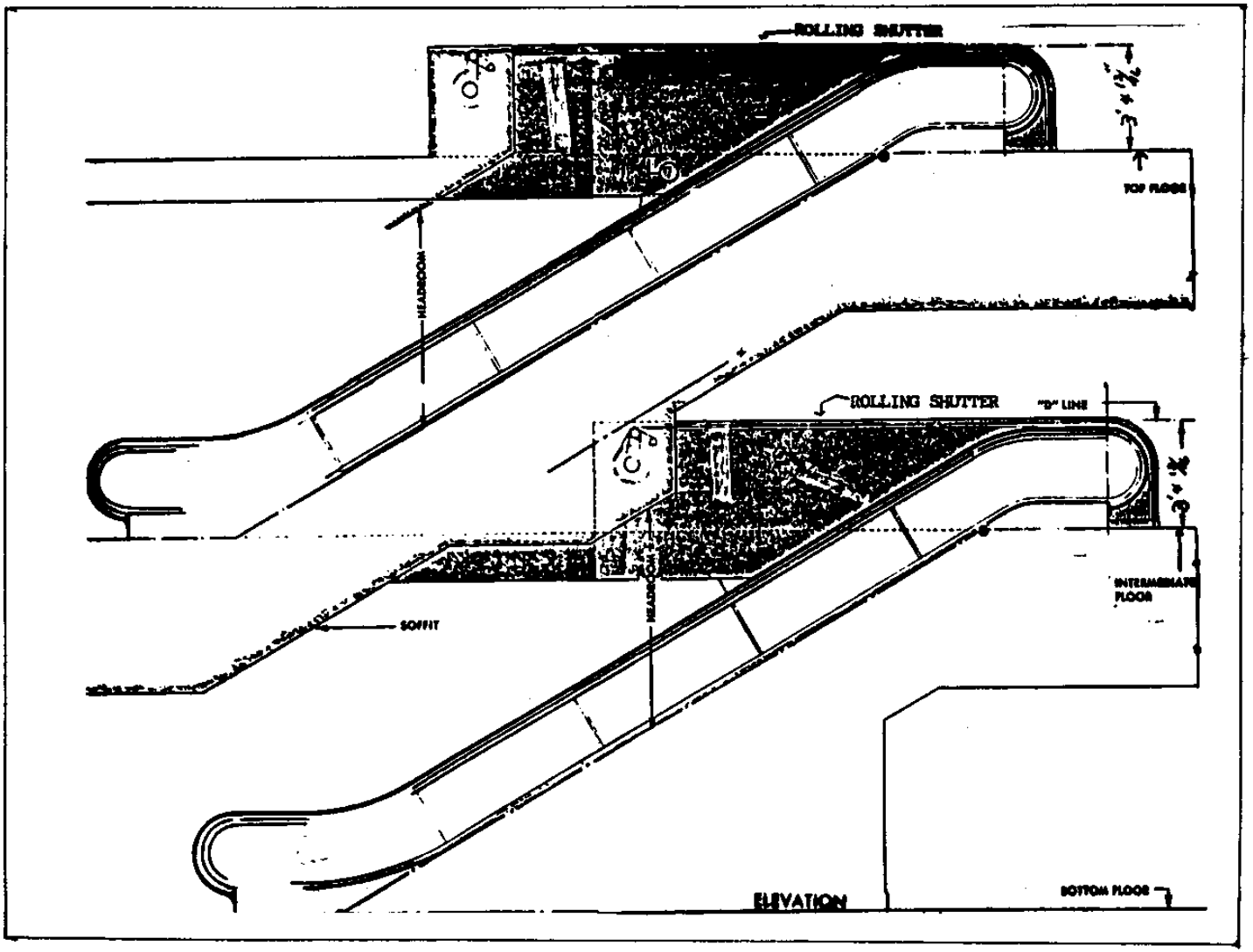

FIGURE 7-17
Typical Rolling Shutter Application

CHECKLIST FOR INSPECTION AND TEST OF ESCALATORS

This checklist is to serve only as a guide. For complete requirements and test procedures refer to ANSI/ASME A17.1 and ANSI/ASME A17.3.

Address _____

_____

Identification No. _____

Inspection date _____

Installation date _____

Alteration date _____

Rated speed _____

Type of inspection and test:

☐ Routine

☐ Periodic (including routine)

☐ Acceptance (including routine and periodic)

Additional information _____

_____

_____

CHECK	A17.1 RULE	A17.3 ITEM Routine	Periodic	Acceptance	CONDITION
FIRE PROTECTION					
1.1 Protection of floor openings	800.1	-	-	320.1a	
1.2 Protection of truss and machinery space	801.1	320.1b	320.1b	320.1b	
CONSTRUCTION REQUIREMENTS					
2.1 Angle of inclination	802.1	-	-	320.2a(1)	
2.2 Geometry	802.2	-	-	320.2a(3), 320.2b	
2.3 Balustrade construction	802.3a	300.1	-	320.2a(1), 320.2a(3), 320.2d(1)	
2.4 Balustrade glass or plastic	803.3c	300.1	300.1	320.2a(2)	
2.5 Skirt, step clearance	802.3e	300.4d	300.4d	320.2d(2)	
2.6 Balustrade change in width	802.3g	-	-	320.2a(6)	
2.7 Guards at intersections	802.3g	300.1	300.1	320.2c	
2.8 Anti-slide devices	802.3h	300.1	300.1	320.2b(6)	
2.9 Handrails	802.4	300.2	300.2	320.3e	
2.10 Steps	802.6	300.3	300.3	320.2f	
2.11 Combplates	802.8	300.5	300.5	320.2g	
2.12 Treads or pedals	802.7	-	-	320.2j, 320.2m	
2.13 Step wheel tracks	802.9	-	-	320.2	
2.14 Machinery space and access	806.3	-	310.1	320.2i	
DRIVING MACHINE, MOTOR, AND BRAKE					
3.1 Connection of machine to main drive shaft	804.1	-	310.3	320.3a	

PART 1 OF 2

CHECKLIST FOR INSPECTION AND TEST OF ESCALATORS

Address _____ ID No. _____ Date _____

CHECK	A17.1 RULE	A17.3 ITEM Routine	Periodic	Acceptance	CONDITION
DRIVING MACHINE, MOTOR, AND BRAKE (continued)					
3.2 Driving motor	804.2	-	310.3	320.3a	
3.3 Emergency brake	804.3a	-	310.3	320.3a(1)	
3.4 Main drive shaft brake	804.3b	-	310.3	320.3a(2)	
OPERATING AND SAFETY DEVICES					
4.1 Starting switch	805.1a	300.4a	300.4a	320.4a	
4.2 Emergency stop buttons	805.1b	300.4b	300.4b	320.4b	
4.3 Speed governor	805.1c	-	310.8(b)	320.4c	
4.4 Broken step chain device	805.1d	-	310.8(d)	320.4d	
4.5 Brake application	805.1e	300.4b	300.4b	320.4g	
4.6 Broken drive chain device	805.1f	-	310.8(d)	320.4e	
4.7 Step switch in machinery space	805.1g	-	-	320.4h	
4.8 Skirt obstruction device	805.1h	300.4c	310.8(e)	320.4i	
4.9 Roller shutter device	805.1i	-	310.8(e)	320.4j	
4.10 [illegible] stop device	805.1j	-	-	320.4f	
4.11 Step demarcation lights	805.1k	300.7	300.7	320.4k	
4.12 Step switch device	805.1m	-	310.8(g)	320.4m	
4.13 [illegible] operation	805.1n	-	310.8(f)	310.8(f)	
4.14 Demonstrate safety devices	805.1p				
4.15 Signs	805.2	300.8	300.8	300.8	
LIGHTING, ACCESS, AND ELECTRICAL WORK					
5.1 Machine room lighting	806.1	-	310.1	320.5a	
5.2 Step lighting	806.3	300.8	300.8	320.5b	
5.3 Access to interior	806.3	-	-	320.5c	
5.4 Electrical work and grounding	806.4	-	310.2	320.5d	
5.5 Voltage limitations	806.4d	-	-	320.5e	
TESTS					
6.1 Speed test	1009.2(1)	-	310.8	320.6b	
6.2 Brake test	1009.2(2)	300.4b	300.4b	320.6c	
6.3 Running test with no load	1009.2(3)	300.4a	300.4a	320.6d	
6.4 Stationary test with no load	-	300.3	300.3	320.6e	

Performed by _____ Inspector _____

PART 2 OF 2

SAMPLE

FIGURE 7-18
Checklist For Inspection And Test Of Escalators

CHAPTER 8

MOVING WALKS

8.1 INTRODUCTION

NOTE: Paragraphs identified with a vertical line in the left margin are inspections that should be made by certified Vertical Transportation Equipment Inspectors only.

8.1.1 Scope

The inspection of moving walks included in this chapter is not only an inspection of all safety related functions, but is also an inspection to determine the condition of the equipment and identify areas that need improvement. Proper maintenance is needed to keep the moving walk operating. When preventive maintenance is lacking, shut downs will occur. Park IV of the ANSI/ASME A17.2 Inspector's Annual for Elevators and Escalators addresses the safety aspect of the inspection of moving walks. In this chapter we will identify the specific Division of Part IV which relates directly to the inspection procedure being followed in this text. It is intended that each noted division should be reviewed as it is identified and suggested procedures followed. The maintenance and performance considerations of the inspection will be addressed in the following text. See Figures 8-1, 8-2, and 8-3, which show various moving walk arrangements with component names that will be used in this chapter.

8.1.2 Performance Criteria

As was stated previously, the purpose of this type of inspection is to review the entire moving walks installation, including measuring the operation of specific elements of the system against standards that have been established either by national codes or engineering practice common to the moving walk industry. The components of the system selected for testing are those most directly related to safe operation of the moving walk and the overall installation, although some items, such as speed of the moving walks, are related to the efficiency of the operation and grade of service provided. The following is an explanation of the areas that should be tested and criteria to use for evaluating this performance.

8.1.2.1 Moving Walk Operating Speed. Moving Walk Operating Speed is measured with a tachometer held against the deck while riding on the unit. Operating speed should be maintained at a level of plus or minus 5% of the rated speed under any load condition in both directions of travel. A second speed test should be performed by holding a tachometer on the handrail while standing at the landing. Both handrails and the stop speeds should be very close. A speed variation might indicate a condition of handrail slip.

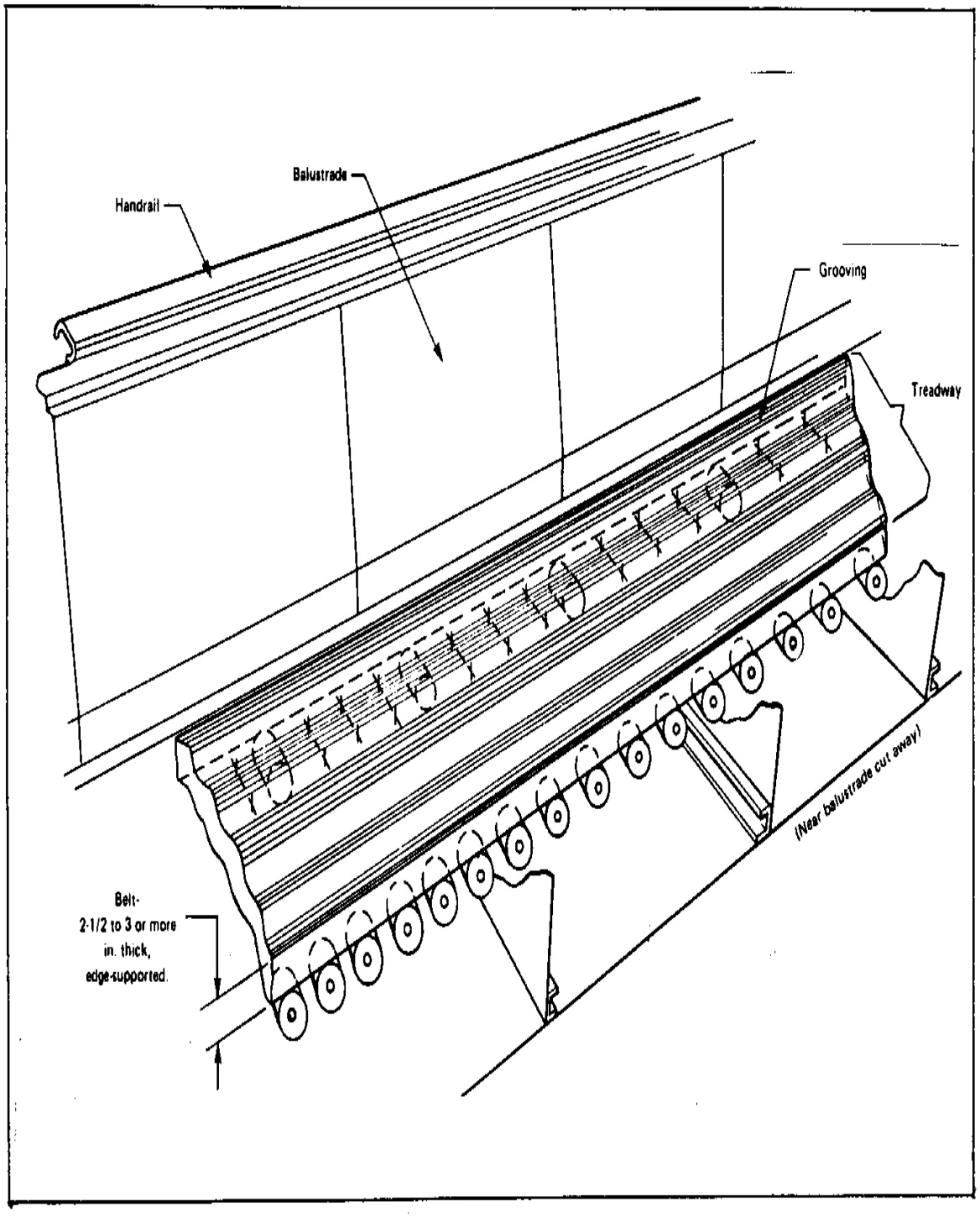

FIGURE 8-1
Belt Type Moving Walk

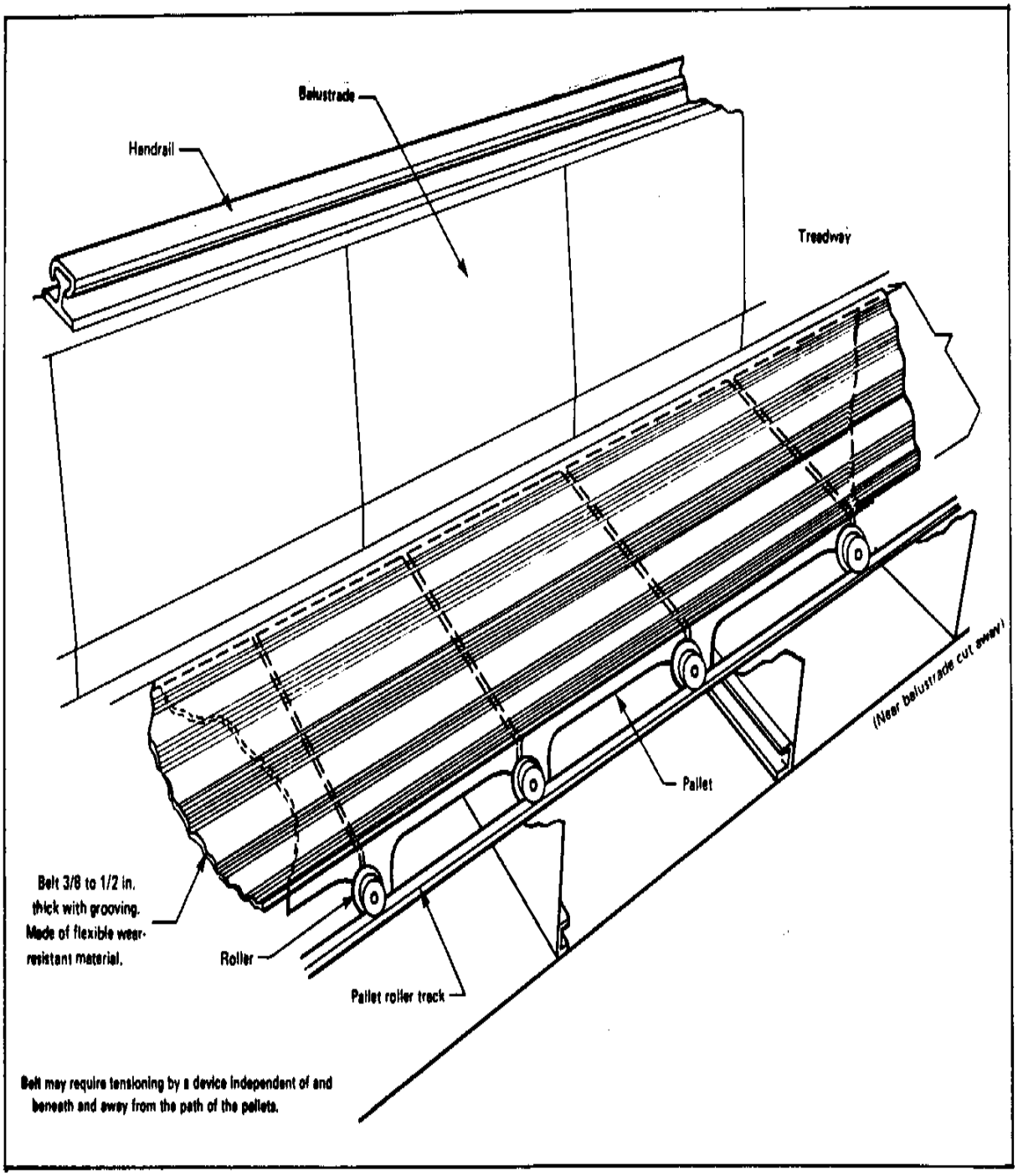

FIGURE 8-2
Belt-Pallet Type Moving Walk

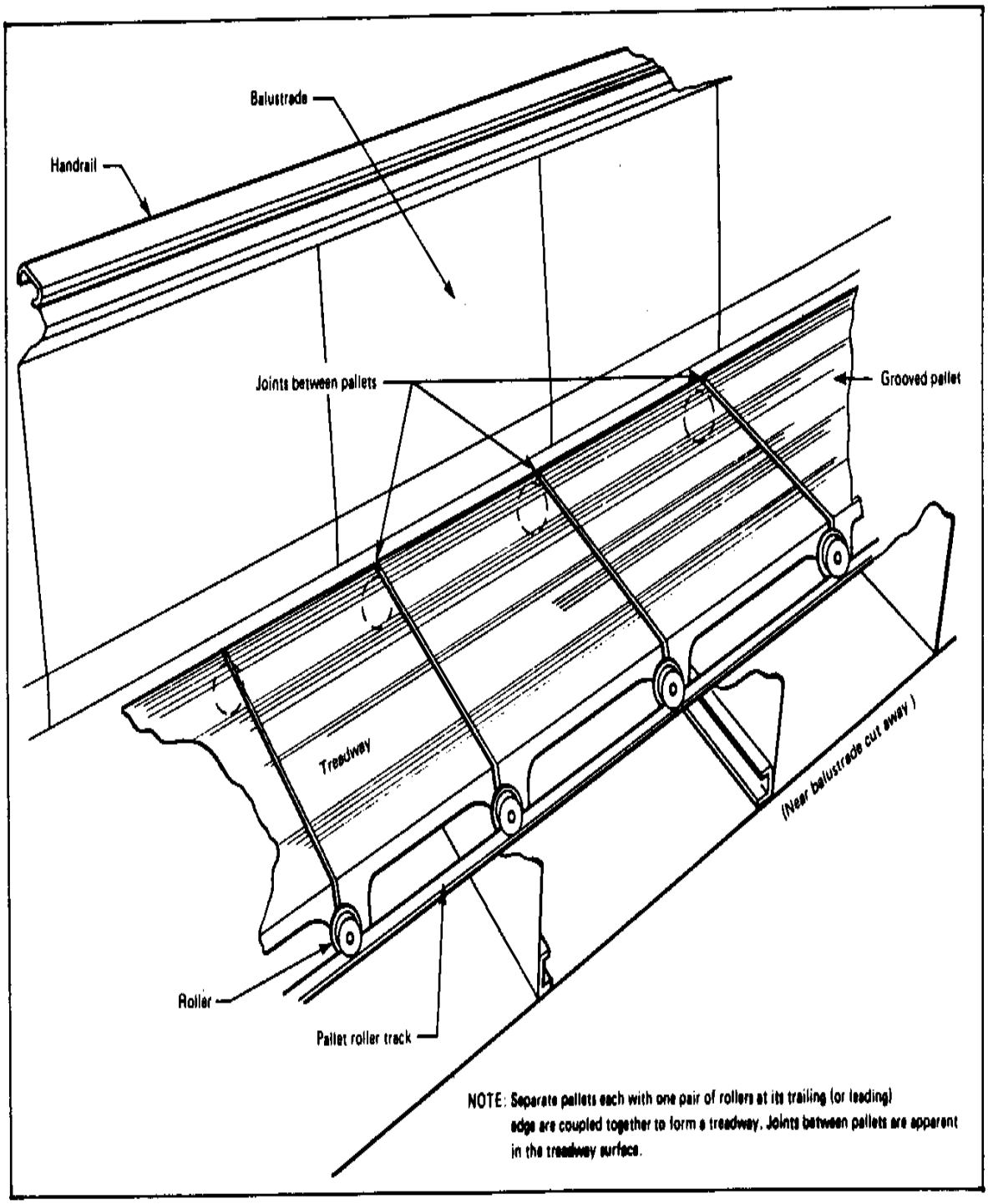

FIGURE 8-3
Pallet Type Moving Walk

8.2 ROUTINE INSPECTION

8.2.1 Scope

Division 40.0 of the A17.2 Manual covers inspections made on the moving walks exterior. This section of the A17.2 Manual is quite complete and covers the majority of the items to examine. However, the inspector must also check to see that all operating equipment is functioning in its intended manner and that the appearance is acceptable to the rider.

8.2.2 Balustrades And Guards

Note any cracked or broken balustrade panels or ceiling intersection guards, if furnished. Also note any screws or fasteners used to hold panels or moldings that are not flush or that have burrs. Ceiling intersection guards should conform to dimensions shown in Figure 8-4.

8.2.3 Handrails

The handrails should be inspected, paying close attention to all splices and joints. Splices or joints that open up can cause a severe finger pinch as the handrail goes around the newel. Handrails should move in the same direction and at substantially the same speed as the steps. Handrail tension should be checked by grasping a handrail at the landing. If it takes a great amount of effort to stall the rail the tension is correct. If the handrail can be easily stalled, then it should be readjusted.

8.2.4 Treadway

The treadway should be examined to determine whether grooves and surfaces are in good condition, securely fastened in place, and are kept clean and free of debris.

8.2.4.1 Belt Type. Visually examine the exposed portion of the belt and belt splice for breaks and deterioration.

8.2.4.2 Belt Pallet Type. Visually examine belt splice and underside of the belt for breaks and deterioration. Also check the pallet fastenings. They should not project above the surface of the exposed treadway and the height of the pallets shall not vary more than 1/16 in. (1.6 mm) in respect to one another.

FIGURE 8-4a Typical Guard At A Flush Ceiling Intersection

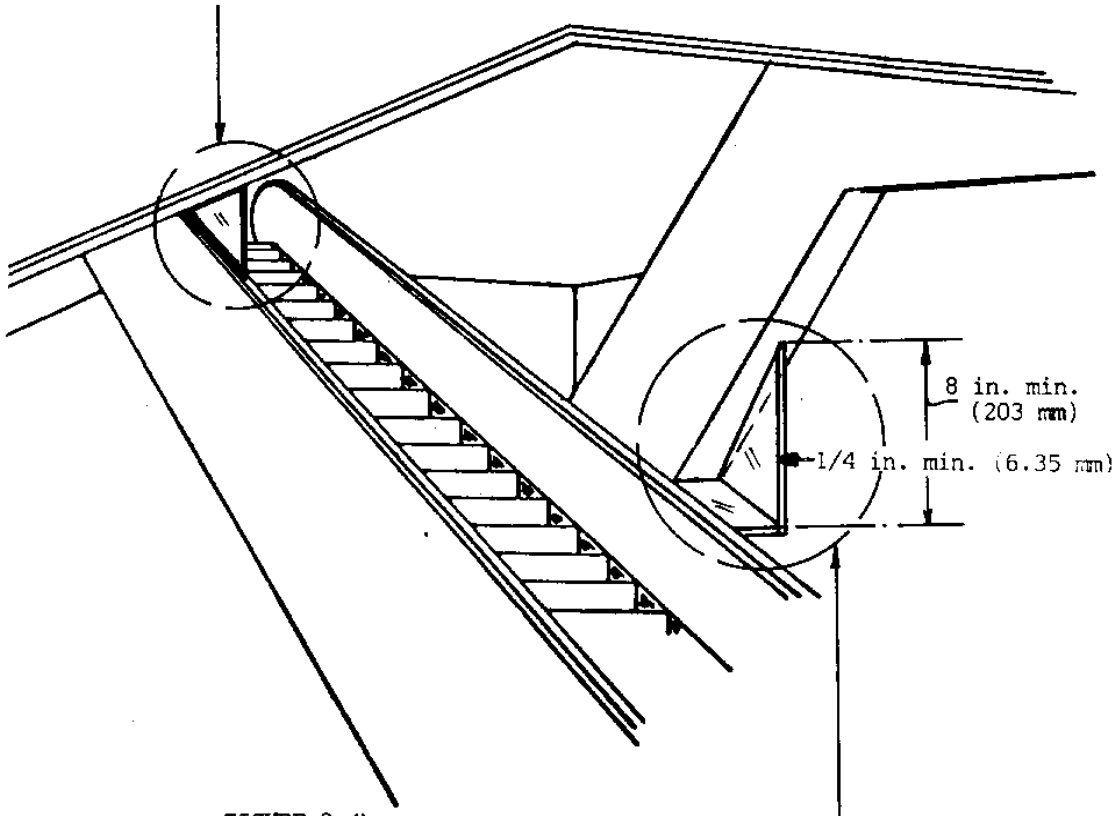

FIGURE 8-4b
Typical Guard At Offset Ceiling Intersection

8.2.5 Treadway Supports

8.2.5.1 Slider Bed Support Surfaces. Slider bed support surfaces shall be reasonably smooth.

8.2.5.2 Roller Bed Support. On roller bed supported treadways the belt tension shall be such that the deflection of the treadway surface, midway between roller, shall not exceed the quantity 0.094 inches plus 0.004 times the center to center distance of rollers in inches, when the treadway surface is loaded midway between rollers, with 25 lbs weight concentrated on a cylindrical footpiece 2 inches long by 1 inch in diameter and placed with its long axis across the belt. (See Figure 8-5a).

8.2.5.3 Edge Support. On edge supported belts, the treadway belt is transversely rigid and is supported by rollers along its edges. With the belt tensioned through the take-up system, the permissible slope of a straight line from the top of a treadway rib adjacent to the centerline of the treadway to the top of a treadway rib adjacent to the balustrade (in a plane perpendicular to the path of the treadway) shall not exceed 3% when the treadway is loaded with a 150 lb weight on a 6 inch by 10 inch plate located on the centerline of the treadway, with the 10 inch dimension in the direction of treadway travel. (See Figure 8-5b).

8.2.6 Threshold Plates

Inspect the threshold plates and note their condition. Threshold plates should be provided with a comb. The threshold plate shall be meshed with and set into the grooves in the treadway surface so the points of the teeth are always below the upper surface of the treadway.

8.2.7 Illumination

Determine whether the lighting is adequate and uniform at the landings. Landings shall be illuminated with light intensity of not less than 5 foot candles. The illumination shall be of uniform intensity and should not contrast materially with that of the surrounding area.

8.2.8 Operation

Check the moving walk in each direction of travel for a smooth operation. Note any excessive noise or vibration and its location if possible. Check each emergency stop button in each direction and observe and record the stopping distance.

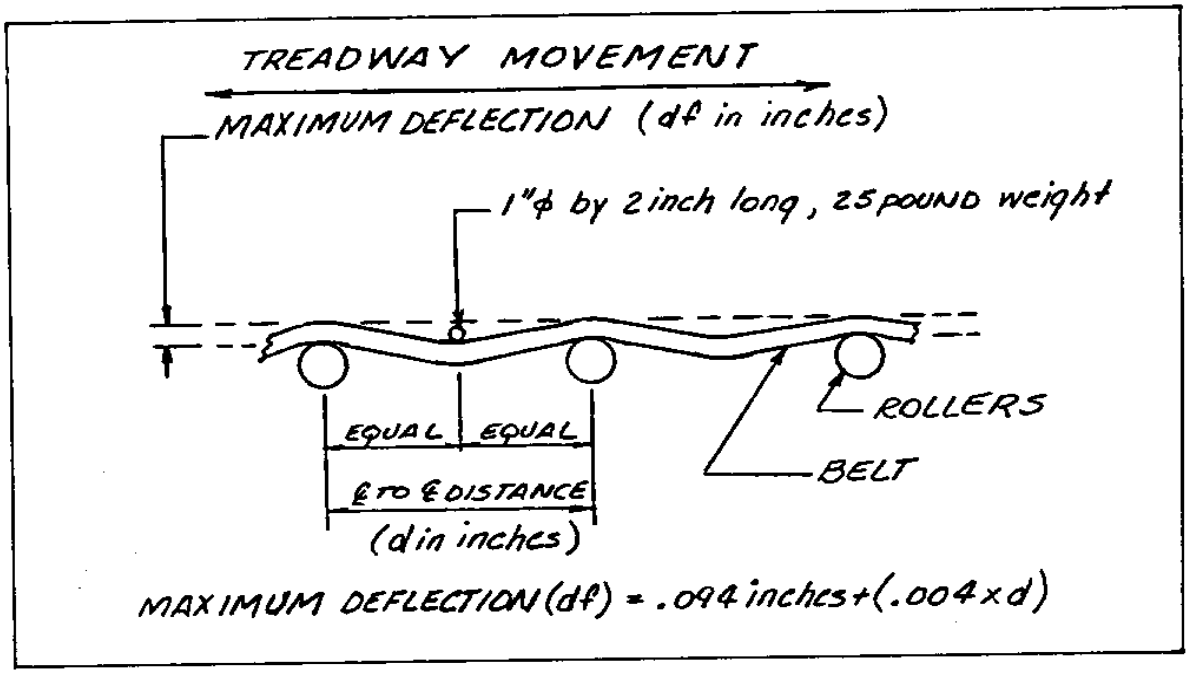

FIGURE 8-5a
Belt Deflection With Roller Bed Support

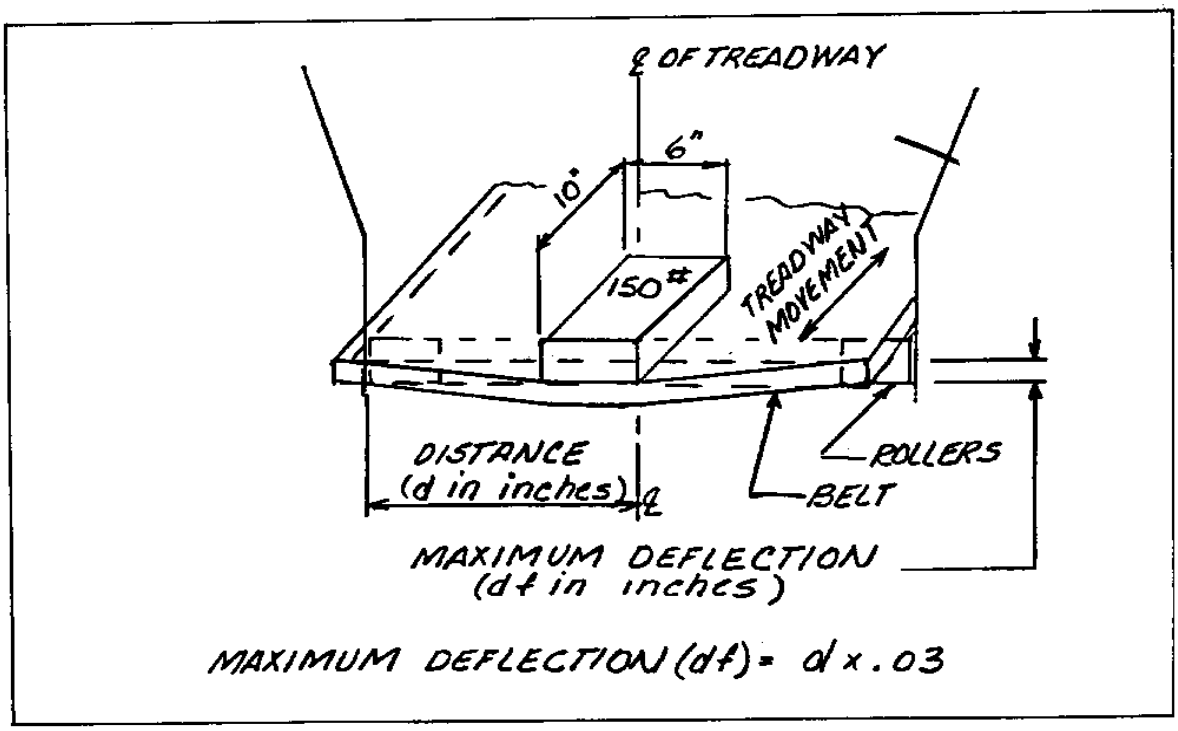

FIGURE 8-5b
Belt Deflection with Edge Support

8.2.9 Skirt To Treadway Clearance

Check the skirt panel for excessive clearance. This can be done with a ruler, feeler gauges or commercially available devices made especially for this purpose. The clearance between treadway and adjacent skirt panel is required to be not more than 1/4 inch at either side. This requirement is for equipment installed under the 1971 and later editions of the A17.1 Code.

8.2.10 Start Switch

Check the key-operated switch in the run position. If the key can be left in the run position or removed in the run position, check that the emergency stop buttons will function properly and the moving walks will not restart when the emergency stop buttons are released. Where automatic starting devices are provided, check that they are nonfunctional after the emergency stop buttons are released.

8.3 PERIODIC INSPECTION AND TESTS

8.3.1 Scope

Division 410 of the A17.2 Manual covers operational inspections and tests. It is required that these inspections and tests be performed every 12 months.

8.3.2 Machinery Space

Permanent electric lighting and a 20 Amp ground type 110 V duplex receptacle shall be provided in every remote machine room. The illumination shall be not less than 10 foot candles at the floor level. The lighting control switch shall be located within easy reach of the access to such rooms. Where practicable, the light control switch shall be located on the lock jamb side of the access door. Where the machine is located in the truss, a permanent 20 Amp grounding type 110 V duplex receptacle accessibly located with the machine area of the truss shall be provided to accommodate a drop cord light. Determine whether the machinery space is clean and free of oil and debris.

8.3.3 Controls

Examine controller visually to determine that it is clean and that contacts of magnetically operated contactors and relays and the electrical connections thereto are in good condition. Determine that the fuses are in place and have not been jumped or otherwise tampered with. Where there is more than one driving machine in a room, check that each disconnect switch or circuit breaker is numbered to correspond to the number of the driving machine which it controls.

8.3.4 Wiring

All electrical wiring should be checked for damage. Many times conductors and conduits have become damaged when working in the area. The wiring must be constantly inspected to maintain a safe environment.

8.3.5 Drive Machine

Check the motor to determine that is clean, properly lubricated and in good operating condition. Visually check the driving machine fastenings and bearing caps and determine that they are tight. Visually check the condition of the brake, if possible. Test the brake application to determine that it applies upon loss of power or actuation of the safety devices. Also note any excessive backlash in the driving gears. If a chain is used to connect the driving machine to a sprocket on the main drive shaft, note whether there is adequate, but not excessive slack in the driving chain. Note the adjustment of the broken-chain device and whether chain or gears are lubricated. If the drive chain parts, the device will cause the application of the brake on the main drive shaft and stop the drive machine. Operate the broken-chain device by hand to verify operation. Inspect V-belts for damage, wear, tension, and reasonable quality of tension among members of a set. When V-belts are replaced in multiple drives, a matched set of belts should be used.

8.3.6 Speed Governor

The speed governor, if required, should be checked by tripping the mechanism manually. Speed governors are not required where a moving walk is driven by AC squirrel cage induction motors and the motor is directly connected to the driving machine.

8.3.7 Pallet Chain

Note any excessive slack in either pallet chain and whether they are lubricated. Lack of adequate chain lubrication may be indicated by the presence of a red rusty deposit on the side plates of the chain links.

8.3.8 Broken Treadway Device

Where belt pallet type or pallet type treadways are used a broken treadway device is required. This should be operated by hand to determine that it will apply the brake and stop the moving walk.

8.3.9 Speed Test

On moving walks with DC driving machine motors, or where the speed appears to have been changed, a speed test should be performed. With no load on the treadway, measure and record the "no load" speed in feet per minute. This speed should not exceed the rated speed by any significant amount. Use a tachometer to measure the speed direct or determine the speed by carefully noting the time, in seconds, for a given step to travel from one combplate to the other. Then compute the speed using the following formula: S = 60 d/t where S is the speed in feet per minute, "d" is the distance between the units of the tooth points of the opposing thresholds measured along the treadway in feet, and "it" is time for the selected pallet or chalk mark to move from one threshold to the other in seconds.

8.3.10 Rolling Shutters

Where rolling shutters are used to protect floor openings, test the operation of the shutter both manually and automatically (sensing devices should be checked as outlined in Item 117.1a(7), Note 2.) Check the manual means, such as a hand crank, and determine that is readily accessible and visible. If power operated, test the operation of the sensitive leading edge of the shutter to determine that application of a force not exceeding 20 lbs will stop the shutter and cause it to reverse for a distance of approximately 6 in.; and that following the removal of the force the shutter will resume its closing motion until the opening is fully closed. on this test, the initial movement of the shutter should cause the power circuit to the moving walk driving motor and brake to open and stop the moving walk and prevent its further operation until the shutter is fully retracted.

CHECKLIST FOR INSPECTION AND TEST OF MOVING WALKS

This checklist is to serve only as a guide. For exception requirements and test procedures refer to ANSI/ASME A17.1 and ANSI/ASME A17.2

Address _____

_____

Identification No. _____

Inspection date _____

Installation date _____

Alteration date _____

Rated speed _____

Type of inspection and test:

☐ Routine

☐ Periodic (including routine)

☐ Acceptance (including routine and periodic)

Additional information _____

CHECK	A17.1 RULE	A17.2 ITEM Routine	Periodic	Acceptance	CONDITION
DESIGN REQUIREMENTS					
1.1 Direction of passage	900.1	-	-	420.2a	
1.2 Width—limitations	900.3a	-	-	420.2h(2) 420.2c	
1.3 Change in width	900.3b	-	-	420.2e(2)	
1.4 Belt type treadway	900.4	400.3a	400.3a	420.2i	
1.5 Belt pallet type treadway	900.5	400.3b	400.3b	420.2i	
1.6 Pallet type treadway	900.6	400.3c	400.3c	420.2i	
1.7 Treadway grooving	900.4,5,6	400.3	400.3	420.2i	
1.8 Treadway slope	900.7	-	-	420.2b	
1.9 Speed	900.8	-	410.8	420.2d	
1.10 Treadway supports	900.8	400.4	400.4	420.2j	
1.11 Treadway tensioning device	900.9(c)(1)	-	-	420.2m	
1.12 Threshold plates	900.10	400.6	400.6	420.2k	
1.13 Balustrades	900.11	400.1	400.1	420.3a	
1.14 Skirt panel clearance	900.11c	400.5a	400.5c	420.2g	
1.15 Guards at ceiling intersections	900.12	400.1	400.1	420.2f	
1.16 Handrails	900.13	400.2	400.2	420.2h	
1.17 Supporting structure	900.15	-	-	420.2l	
DRIVING MACHINE, MOTOR, AND BRAKE					
2.1 Driving motor	900.14	-	410.2 410.3	420.3a	
2.2 Connection between driving machine and main drive shaft	900.14a	-	410.3	420.3b	
2.3 Brakes	900.14b	-	410.3	420.3c	

PART 1 OF 3

CHECKLIST FOR INSPECTION AND TEST OF MOVING WALKS

Address _____ ID No _____ Date _____

CHECK	A17.1 RULE	A17.2 ITEM Routine	Periodic	Acceptance	CONDITION
DRIVING MACHINE, MOTOR, AND BRAKE (continued)					
2.4 Application of brakes	1006.2h 900.14c	-	410.2	420.3a(4)	
2.5 Speed reducers	900.14d	-	-	420.3d	
2.6 Drive chains	900.14e	-	410.4	420.3d	
2.7 V-belt drives	900.14f	-	410.3	420.3d	
2.8 Other drives and components	900.14g	-	-	420.3d	
OPERATING AND SAFETY DEVICES					
3.1 Starting switch	901.1a	400.5d	400.5d	420.4a	
3.2 Emergency stop switches	901.1b	400.5b	410.8a	420.4b	
3.3 Broken drive-chain switch	901.1c	-	410.3 410.6a	420.4c	
3.4 Speed governor	901.1d	-	410.4c	420.4d	
3.5 Broken treadway devices	901.1e	-	410.8d	420.4e	
3.6 Power interruption	901.1f	-	-	420.4f	
3.7 [illegible] switch (machine space)	901.1g	-	410.6b	420.4g	
3.8 [illegible] device	901.1h	-	410.8	420.4h	
LIGHTING AND ELECTRICAL WORK					
4.1 [illegible]	901.2a	-	410.2	420.5a	
4.2 Wiring methods	901.2b	-	-	420.5c	
4.3 Voltage	901.2c	400.8	400.8	420.5d	
4.4 Enclosure of electrical parts	901.2d	-	410.2	420.5c	
4.5 Lighting of machine room	[illegible]	-	410.1	420.5a(1)	
4.6 Machine room in [illegible]	[illegible]	-	-	420.5a(4)	
4.7 Lighting of landings	901.2g	-	-	420.5a(2)	
FIRE PROTECTION					
5.1 Protection of floor openings	902.1	-	-	420.1	
5.2 Protection of supports and machine space	902.1	-	-	420.1	
TESTS					
6.1 Speed test (DC driving motor)	1006.2h(2)	-	410.5	420.6a	
6.2 Brake test (inclined treadway)	1006.2h	-	-	420.6b	
6.3 Falling shutters	1006.2f	-	410.6a	420.6a(2)	
6.4 Emergency stop device	1006.2e	-	410.6b	420.6a(3)	
6.5 Speed governors	1006.2a	-	410.6c	420.6a(4)	

PART 2 OF 3

SAMPLE

FIGURE 8-6a
Checklist For Inspection And Test Of Moving Walks

CHECKLIST FOR INSPECTION AND TEST OF MOVING WALKS

Address _____ ID No _____ Date _____

CHECK	A17.1 RULE	A17.2 ITEM Routine	Periodic	Acceptance	CONDITION
TESTS (continued)					
6.6 Broken treadway device	1006.2d	-	410.6d	420.6c(6)	
6.7 Broken drive-chain device	1006.2c	-	410.6e	420.6c(6)	
6.8 Machine space temp	1006.2e	400.5	410.6f	420.6c(7)	
6.9 Handrail (speed)	400.13	400.2	400.2	420.6c(9)	
6.10 Stationary tests	800.9	-	-	420.6d	

Performed by _____ Inspector _____

PART 3 OF 3

SAMPLE

FIGURE 8-6b
Checklist For Inspection and Test Of Moving Walks

CHAPTER 9

CONSTRUCTION HOISTS FOR MATERIALS AND PERSONNEL

9.1 INTRODUCTION

NOTE: Paragraphs identified with a vertical line in the left margin are inspections that should be made by certified Vertical Transportation Equipment Inspectors only.

9.1.1 Scope

The term CONSTRUCTION HOIST applies to temporary devices that are used to raise or lower materials and/or personnel during construction, alteration or demolition. It does not relate to permanent devices that are being temporally used to move materials or personnel. Figure 9-1 shows a typical hoist. This chapter will provide generalized inspection procedures to follow. The inspector will have to formulate his own specific procedures for each individual device based on the specific design of the device, manufacturer's recommendations, actual application and the general considerations included in this chapter. The inspection of the hoist is to be not only an inspection to determine the safety condition but to determine if the device is being properly maintained and to identify areas that need improvement. Proper maintenance is needed to keep this type of hoist operating. These devices are subjected to extreme operating conditions, and when preventive maintenance is lacking, shut downs will occur. In this chapter we will identify specific published safety standards which relate directly to the inspection procedure being followed in this text. It is intended that each noted standard should be reviewed as it is identified. Safety, as well as performance considerations of the inspection, will be addressed in the following text.

9.1.2 Purpose

The purpose of this inspection is to review both the personnel hoist and material hoist installation to ascertain that the equipment is being properly maintained and is in a safe operating status. Because the operation and use of the hoist are by nature very dangerous, the inspection should be directed towards those areas such as safety devices, limit switches, guards, loading, transfer, discharge points and surfaces and other component parts and safety guards that directly relate to the safe operation by the user personnel.

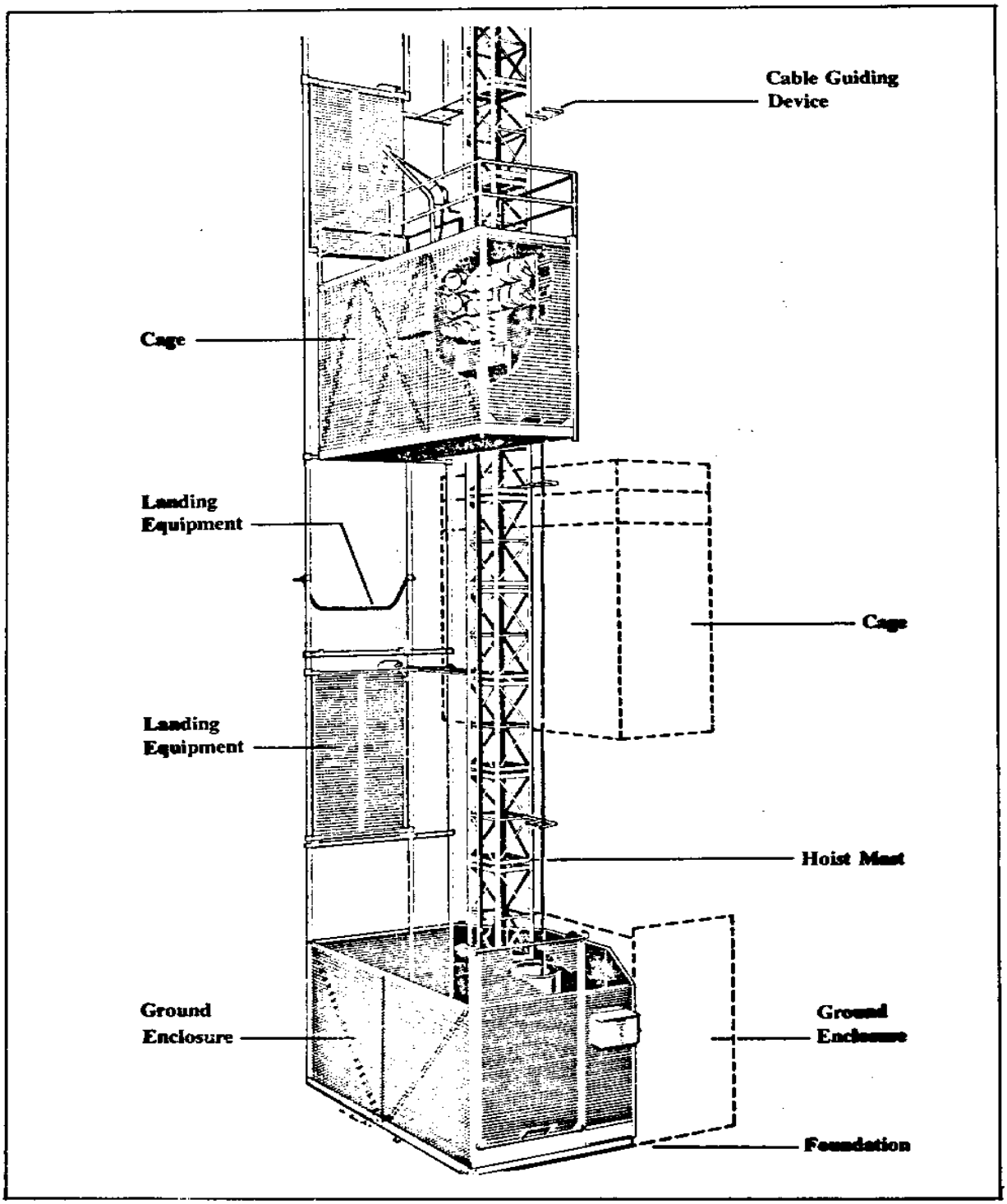

FIGURE 9-1
Typical Construction Hoist

9.1.3 Use

The hoists are used to transport materials and personnel from one point to another vertically during the construction, alteration and/or demolition phases of a project. The devices are transported to a site, erected, used, dismantled and moved to the next site. They are usually operated exclusively by certain trained, designated operating personnel when transportation of materials or personnel is required. No persons other than such employees are permitted to operate the hoist unit. No personnel are allowed to ride a material hoist manufactured and erected in accordance with requirements of the A10.5 Standard. Materials may be transported on hoists manufactured and erected in accordance with requirements of the A10.4 Standard.

9.1.4 Applicable Safety Standards

The applicable safety standards for the construction, maintenance, inspection and operation of hoists are contained in the ANSI A10.4 Safety Requirements for Personnel Hoists and the A10.5 Safety Requirements for Material Hoists.

9.1.5 Inspection Interval

It is recommended that periodic inspections of the hoists be conducted at intervals not to exceed 90 days.

9.2 OUTSIDE HOISTWAY INSPECTION

9.2.1 Hoistway Enclosure

When the hoist is located outside of the structure, hoistway enclosure may be omitted except at the lowest landing and on the building side of the hoistway. Any area that is adjacent to scaffolding must be enclosed. Hoists located inside a structure shall be fully enclosed unless they pierce no solid floors. Any area that is accessible to personnel must be protected. Material hoists shall not be used together with personnel hoists in multiple hoistways. Check the tower fastenings to see that they remain secure.

9.2.2 Landings

Railings and toeboards are required on open sides of landing platforms or runways. All platforms exposed to falling objects must be protected. These areas must be kept clear.

9.2.3 Hoistway Doors

Doors shall be at least 6'-6" high and reject a ball 3/4" in diameter. Check construction for limit of deflection. open and close each manually opened hoistway door, examine each, including any hand-operated latches, and note any broken glass panels in solid type doors or any structural defectors in the frames. Where vision panels are provided, note the type of glass used in the panel and whether it is securely in place. Try to open the door. Doors should be openable from the car only. Doors at the lowest landing may have unlocking means. The door should not open. If it can be opened, the lock or latch is defective, or the door has sagged so that the lock or latch is not engaging properly. The doors are not required to have interlocks as do elevators.

9.3 INSIDE THE CAR INSPECTION

9.3.1 Car Doors

Examine the car door and note any broken, bent or sprung members. Operate doors to determine that they operate freely and that bottom sill-guide tracks or bottom guiding members are in place, securely fastened, and are not worn enough to permit the doors or gates to travel. Car doors are required to have an electrical contact, which prevents car movement unless the door is closed. The contract should be positioned such that it is not accessible from inside the car. If a gate is provided on the side away from the structure, it shall be mechanically locked unless the car is at the ground level. Doors are considered closed when the open area does not exceed 2".

9.3.2 Car Enclosure

Determine that the car enclosure is structurally sound and is securely fastened. Determine that capacity plates and any required certificates are posted in the car. Report any evidence of alterations or additions to the car which have materially changed the car weight. Examine lighting fixtures to determine whether they are securely fastened and have the required protection. Determine that sufficient illumination is provided.

9.3.3 Operating And Control Devices

All operating and signalling devices should be operating properly. If the hoist is made to function by applying continuous pressure on the operating buttons, operate the car in each direction by means of the operating buttons or other devices to determine that they do not stick or bind, are properly marked, and that the car stops when released. When an automatic leveling device is provided, the accuracy of stopping in both directions of travel should be noted at landings to determine whether any readjustments are necessary. If the hoist function is automatic, establish calls to operate the car, making stops in both the up and down direction.

At each stop, note the relation of the car platform sill to the landing sill. Note any tendency of operating push buttons to stick. When an automatic leveling device is provided, the accuracy of stopping in both directions of travel should be noted at landings to determine whether any readjustments are necessary.

9.4 CAR TOP INSPECTION

9.4.1 Counterweight

If provided, examine the nuts and cotter pins at the top and bottom of the rods and the frame rods to determine if they are in place and that filler weights are securely held in place. Determine that the counterweight guide shoes are securely fastened to the frame and that the guiding members are not worn excessively. Also determine if swivel-type or roller-type guide shoes are free to move as intended. Inspect the counterweight suspension fastenings.

9.4.2 Suspension And Fastenings

Examine the condition of the fastenings at the car and machine or counterweight ends to determine if they have been properly made up. The A10.4 Code requires that cars and counterweights, except for Hoists having direct-plunger hydraulic or rack and pinion machines, shall be suspended by two wire hoisting ropes for drum machines and three for traction machines secured to the car or counterweight or rope hitch by babbitted sockets, rope clamps, or equally substantial fastenings. Wire ropes shall not be lengthened or repaired by splicing. The winding drum ends of car and counterweight ropes shall be secured inside the drum, and there shall be not less than three turns of the rope on the drum when the car or counterweight has reached the extreme limit of its overtravel.

9.4.3 Normal Terminal Stopping Devices

Run the car to the top of its travel at slow speed to examine the normal terminal stopping device. On traction hoists and on most winding drum type installations, this device usually consists of a switch or switches installed in hoistway actuated by cams on the car. In some cases, however, normal terminal stopping devices of traction hoists may be located in the machine room or overhead machinery space and be mechanically connected to and driven by the car. Where the normal terminal stopping device of traction hoists is so located and the required broken-drive device is located on top of the car, manually open it with the car at rest. The opening of this switch should prevent the car from starting. In the case of some winding drum machine installations, the device is part of an automatic stop-motion switch mounted on and operated directly by the driving machine. Determine that stopping switches and cams are in correct alignment and are securely fastened in place. Also determine the condition of the limit switch rollers, as reduction of the effective roller diameter due to either wear or loss of the tires

may interfere with or prevent proper operation of the switch. Excessively worn car guide shoes and worn limit switch rollers, combined" may cause cars to overrun their terminals. If the equipment is in proper condition and sufficient overhead clearance exists, make a test of top normal terminal stopping devices with empty car at rated speed. Repeat operation with bottom normal terminal stopping devices. On each of these stops, the car should stop at or near the terminal landing.

9.4.4 Car And Counterweight Guide Rails, Rail Fastenings, Car Crossheads, And Car Guiding Members

Examine the guide rails, paying particular attention to the condition of the surfaces and the correct alignment of the joints. Repeated operation of the car safety or improperly adjusted or loose car guide shoes that permit the safety jaws or block to run against the rail surfaces frequently cause serious wear or scoring of the rails and the safety jaws or block. Where sliding-type guide shoes are used, determine that rails are free of lint and dirt, and are adequately but not excessively lubricated. Where roller guides are used, rails should be clean and dry without lubricant. Check the rails to bracket, brackets to building construction, fishplates, crosshead connections, and car guide shoe fastenings to determine whether they are sound and tight, and that there are no missing bolts or guide clips. operate the car at a rated speed from one terminal landing to the other, and determine whether there is excessive or irregular motion of the car which may indicate that the car or counterweight guide rails are not properly aligned. If such motion occurs and it is not due to loose or worn guide shoes, or rollers, a recommendation should be made for correction of the rail alignment.

9.4.5 Car Top

The inspector should check to see that the car top and associated equipment have been cleaned. A clean installation eliminates a fire hazard and definitely increases the operating life of the equipment, in addition assuring good operation.

9.4.6 Covers And Guards

Another area to check when examining the car top is that all covers and guards are in place. They are provided to prevent accidental contact with moving devices or exposed electrical components. This protection is not being provided if the cover or guard is not properly mounted in place.

9.4.7 Car-Leveling Devices

Examine fastenings and clearances of car-leveling devices, including cams and vanes located in the hoistway.

9.4.8 Hoistway Junction Box, Car Junction Box, And Traveling Cables

Hoistway and car junction boxes should be securely fastened with covers in place. Examine the supporting means of the cable at the hoistway junction box and also the car junction box. Traveling cables less than 100 ft. in length may be looped around a spool or other supporting member and securely corded, wired, or taped to prevent loosening or separation of the loop. In addition, the loop may be secured by clamps or other similar devices. Also see the National Electrical Code, ANSI/NFPA No. 70, Section 620-41. Table 400.4, Note (6) of the National Electrical Code requires that traveling cables exceeding 100 ft. between supports have steel supporting members running through the center of the cable assembly. Examine the steel supporting member where it is attached to the hoistway and car junction box and determine that it is securely fastened. The live load on the steel supporting fillers should hang in the direction of tightening of the supporting bolt or there should be a means of fastening; and the dead end taped or clamped to the live end. Examine particularly for any evidence of wear or breaks in the steel supporting fillers, which may damage the insulation of the conductors or cause the traveling cable to release, causing strain or breakage to the conductors at the terminal lugs. Where a flexible wire mesh automatic tightening device is used, examine the flexible wire mesh self-tightening grip to be sure that it is securely fastened to its support at the hoistway or car junction box. Examine the eye of the grip attached to the supporting member. When a double eye attachment is used, the eyes should be attached, so that they share the load equally and do not exceed 15 deg. from the axis of the vertical cable. There are basically the following three types of flexible wire mesh self-tightening grips: closed type, split-laced type, and split-rod type. Examine the grip where the eye is attached to the wire mesh section for any visible signs of wear or breakage. This point is subject to damage because of flexing of cable. It is recommended that the lower section of the grip be secured to the traveling cable to prevent triggering (total or partial relaxing of the grip) and culminate in milking of the grip (slight movement of grip on the outer section of the traveling cable). Examine for damage caused by the securing means. The triggering of the grip may cause the cable to release, thereby placing strain or breakage on the individual conductors. Milking of the grip may cause wear to the insulation of traveling cable. Examine the traveling cables for excessive twists or kinks; damage due to chafing; intertwining of multiple cables; and clearance from hoistway equipment such as buffers, plungers, brackets, beams, etc. All electrical wiring needs to be checked. Many times wiring and conduit have become damaged when working around the car top or hoistway. This must be constantly inspected to maintain a safe environment.

9.4.9 Installation Of Pipes, Wiring, And Ducts In Hoistway

Check the hoistway for the installation of wiring and ducts not related to hoist equipment. These are not permitted by Code.

9.4.10 Hoistway Housekeeping

The hoistway should be kept clean. Build-up of lint, dirt and trash on beams, ledges, brackets and hoistway entrance sills presents a serious fire hazard. A spark can and does cause a fast moving flash fire.

9.5 PIT INSPECTION

9.5.1 Pit Housekeeping

Determine whether the pit is clear of refuse, water, or combustible material or is being used for storage. Trash and dirt in the pit is an extreme hazard. Fire potential becomes a great concern. This not only means dirt on the floor, but it also means dirt and dust on the equipment that can be considered a health hazard. Be sure they are kept clean and dry. Check the operation of the pit light.

9.5.2 Pit Stop Switch

Where a pit stop switch is provided, check the type, location, and operation with the car moving in the up direction. open switch and try to move the car. The car should not move when this switch is open.

9.5.3 Car Frame (Sling) And Platform

Examine the portion of the car frame accessible from the pit and determine whether all fastenings, including those between the car frame and the platform are securely in place and that the frame is not distorted. Examine the frame and platform members and their fastenings. Many cars have been seriously overloaded, resulting in the fracture of sling members or other damage. Distorted or straightened members, blistered paint, exuded rust from between members or around bolts or rivets, and oil bubbles on members, may all be clues to a cracked or fractured member. Where examination reveals the possibility of a fracture, a complete check should be made.

9.5.4 Car And Counterweight Bottom Guide Shoes

Examine the car and counterweight guiding members and their fastenings to determine that they are properly secured, aligned, and adjusted, and that they are not worn excessively.

9.5.5 Car And Counterweight Safety Parts

Determine that all moving parts of the safety are lubricated, not corroded, free to operate, and that under ordinary operating conditions, the clearance between the guide rail and each rail

gripping face of the safety parts is correct. Check the specific requirements of paragraph 26.4.6 of A10.4 when making this inspection.

9.5.6 Buffers

Check condition of buffers. Buffer requirements are similar to those of elevators. Be sure that means are provided to maintain buffer oil temperature above pour temperature when air temperature goes below pour temperature.

9.6 OVERHEAD MACHINERY SPACE AND MACHINE ROOM INSPECTION

9.6.1 Wire Rope Inspection

9.6.1.1 General. Hoisting ropes must be examined from the machinery space or sheave space or from the car top. It should be noted that it is not possible to describe the inspection procedure for every single type of wire rope installation nor to outline every detail of the inspection procedure. The inspector should use his best judgement in making the inspection and in selecting his location from which a proper examination of the rope can best be made.

9.6.1.2 Inspection. Internal breakage of wire ropes is difficult to detect, and consequently may be a greater hazard than surface wear. The surface of the rope may show little or no wear, but if the rope is bent over a short radius, the individual wires will snap and in extreme cases the rope may be broken by hand. Such failures are more likely to occur where the ropes are lightly loaded and the ratio of sheave diameter to rope diameter is small.

The lengths of all wire ropes in a set of suspension ropes, and consequently the rope tensions, should be substantially equal if maximum rope lift and efficiency are to be obtained. If the tensions do not appear to be substantially the same, equalization of the rope lengths should be recommended. If ropes are dirty or overlubricated, a proper inspection may not be possible unless the dirt or excess lubricant is removed.

9.6.1.3 Lubrication. The lubrication of a wire rope applied during its manufacture may not last the full life of the rope and the rope may have to be relubricated periodically. Proper lubrication of suspension ropes will prolong rope life by reducing abrasive action of wire on wire or strand on strand and will retard deterioration of the fiber cores, eliminate distortion of the rope, and retard corrosion by providing a moisture repellant coating. As a practical guide to the need for lubrication, a finger wiped in a sheave groove should show a faint smudge and have a slightly oily feel. If this test leaves the finger dry and clean, lubrication is advisable. Excessive or improper lubricants may, in the case of traction elevators, seriously reduce the available traction and cause rope slippage. The lubricants and the amount used should be limited to those supplied or approved by established elevator or wire rope manufacturers. Slide of the ropes during

acceleration or retardation may be an indication that the lubrication is excessive. To determine this, it will usually be necessary to observe the ropes where they pass around the driving machine sheave during acceleration and retardation. Some rope creepage is normal. In the case of winding drum machines, excessive lubrication does not create a hazardous condition and should not interfere with the proper inspection of ropes.

9.6.2 Overhead, Secondary And Deflecting Sheaves

The overhead secondary and deflecting sheaves should be examined and tested with light blows from a hammer. If the resulting from the blows is dull and flat, unlike the ring given by sound metal, the sheave parts should be examined carefully for cracks. If no cracks are visible, it is possible to detect very minute or hair cracks by covering the suspected section with machine oil, allowing it to stand a few minutes, wiping off all surplus oil with a rag or waste, and then coating the part with chalk. The machine oil taken up by the crack will cause a brown stain on the chalk. This indication may be hastened by again tapping the suspected part lightly with a hammer or by having the car make a round trip. Examine the sheaves for worn grooves and determine whether all ropes seat to the same depth in the grooves. Look for evidence of any misalignment of sheaves. Determine whether bearing bolts are secure. Sheave shafts and bearing should be inspected for wear and other defects. Determine that the shafts and bearings are adequately lubricated.

9.6.3 Overhead Beams And Fastenings

Examine overhead beams to determine whether they are securely fastened to supports or firmly embedded in walls. Note any settlement of supports. Examine all exposed bolt fastenings of beams supporting machinery or sheaves.

9.6.4 Overhead Platforms. Determine that overhead platform is 12 inch planking or equal. Flooring must be secured.

9.6.5 Traction Driving Sheave

9.6.5.1 Inspection Made with Power Off. open the mainline switch and proceed. Hammer-test sheave and spider as previously described. Inspect fastenings for tightness where demountable sheaves are attached to the sheave spider. Note any evidence of lost motion or misalignment of the traction sheaves with other sheaves. Examine the traction sheaves for worn grooves and determine that all ropes seat to the same depth in the grooves. Particles of metal under rope sheaves are evidence of groove or sheave wear. Traction sheave wear is usually just detected by finding metal particles under the sheave. However, an inspector should watch for the signs that lead to wear before you see the results. The major cause of wear is uneven rope tension. The sheave is designed to carry the load spread over all the ropes. When one is under more tension than the others, this load is transferred to the tighter rope. This can usually be seen by laying a

straight edge across the ropes in the drive sheave grooves. All ropes should touch the straight edge. Ropes that do not touch indicate uneven tension or possible sheave wear. occasionally, an inspector will find a sheave with an unused groove or two. However, most of the time it is not used by design, but it never hurts to check the cross head data tag to verify. It is good practice to confirm the data for the actual rope size and construction. Occasionally, mistakes are found. Changes in the type or size of the specified hoist ropes will change the rope to sheave traction factor, resulting in either insufficient traction or excessive traction. Either condition can result in dangerous consequences. Insufficient traction results in the drive machine losing control of the car and counterweight. This could result in an overhauling load from either side, causing a run away condition. Too much traction could result in the machine lifting either the car or counterweight if the other were to stop and the machine continued to run. The traction factor is extremely critical to safe hoist operation.

9.6.5.2 Inspection Made with Power On. Close the mainline switch and proceed. Excessive lubrication of the wire ropes or wear of the sheave grooves may result in reduction of traction. Test traction by marking the ropes and sheave with a chalk line, then operate the empty car in the up direction and stop it by opening the emergency stop switch. Return the car to the originating floor and observe. Any material reduction of traction may be noted by observing slippage between ropes and traction sheaves.

9.6.6 Guards For Exposed Equipment

With the,mainline switch closed, check exposed gears, sprockets, tape or rope sheaves or drums of selectors; floor controllers or signal machines; and the ropes, chains, or tapes for driving same in machine rooms and secondary machinery spaces to determine that the required guards are in place. Many times guards are removed to service equipment and in haste are not returned to their proper place. A guard sitting off to the side is not doing its job and could result in a painful accident.

9.6.7 Winding Drum Machine

The A10.4 Code allows the use of winding drum machines for hoist applications. Drums shall be grooved with parallel or helical grooving. Only one layer of rope is permitted on helical grooving. With parallel grooving, no more than four layers of rope are permitted. Open the mainline switch and examine hoisting and counterweight rope fastenings in the drum. Note that there would be at least three turns of rope on the drum if the car or counterweight were resting on its fully compressed buffer. Visually examine and hammer-test the drum for defects or cracks, as previously described.

9.6.8 Rack And Pinion Drive

Car mounted rack and pinion drive consisting of one or more power-driven rotating pinions

mounted on the car is allowed. It shall have at least one pinion, one rack, and two back-up rollers. Driving machines located within the car shall be fully enclosed and locked.

9.6.9 Driving-Machine Terminal-Stopping Switches

The normal terminal stopping devices for winding drum machines are required to consist of switches located in the hoistway or on the car, and operated by the movement of the car. Where the normal terminal stopping switches are located on operated by the driving machine, they should be inspected and where possible, operated by hand to determine that the switch and its contacts are in proper operating condition. Determine that the switch contacts, particularly any motor mainline contacts provided, are not burned or worn excessively, and that all gears, chains, or wire ropes and pulleys provided for their operation operate as intended and are not worn excessively. Close the mainline switch and run the empty car to each landing until stopped by the machine terminal stopping switch. Note whether the switch stops the car near the landing. Determine that at the bottom terminal landing with no load in the car, allowance has been made for the greater slide that could occur when rated load is in the car.

9.6.10 Slack-Rope Device

Slack-rope devices are required only for winding-drum machines. The device is arranged to monitor the loss of tension in the hoistway ropes. Most are located at the hoist rope termination, however, some devices are located at the hoist machine. Electric switches used with slack-rope devices should be of the enclosed, manually reset type and should be tested by tripping the device by hand with the machine running. This should stop the car. Where the slack-rope device cannot be operated by hand, test at intervals of not longer than 12 months by lowering the car onto a suitable support or supports placed in the pit. Determine that the tension in the hoisting ropes decreases sufficiently to operate the device and stop the machine. Determine that there is no interference with the free and complete movement of the slack-rope device for the hoisting ropes and the detector bars are set as close as possible to the driving-machine drum in order to open the switch with a minimum of slack rope.

9.6.11 Normal And Final Terminal Stopping Switches

Normal and final stopping switches are required in some cases; the normal terminal stopping switches are located in the machine room and operated by a rope, tape, or chain attached to the car. Switches on rack and pinion drives are required to be located on the car. These switches should be examined as previously outlined.

9.6.12 Gears And Bearings

9.6.12.1 Inspection Made with Power On. Close the mainline switch and proceed. Have the hoist operated in each direction, making frequent stops. Observe if there is any excessive play or

backlash in the bearings or gearing unusual noise or play is usually an indication of gear or thrust trouble, or damage to bearing liners, rollers, or balls. Bearing problems are also detected by sound and/or heat. Examine all bearings and gears for excessive lost motion or wear. Determine whether bearings and gears are lubricated and that oil rings, chains, or other methods of feeding, operate freely. The level of oil in the reservoirs should be checked and any leakage of oil noted.

9.6.12.2 Inspection Made with Power Off. Open the mainline switch and proceed. Examine the oil in the gear case to determine whether it is free of metallic particles or other foreign substances. Check the oil level. Visually check the gear for excessive wear. Gear problems are detected by examining the wear pattern on the gear. This will show that the gear is not properly aligned with the worm, causing the point of contact to be not in the proper position or that the gear is bottoming or contacting the worm shaft. Excessive heat damage, most likely caused by low oil or breakdown of oil, can also be detected. It is indicated by pock marks in the face of the gear tooth or teeth. They resemble casting defect marks.

9.6.13 Driving-Machine Motor

9.6.13.1 Inspection Made with Power on. Close the mainline switch and proceed. Have the hoist operated in each direction, making frequent stops, and observe the operation of the motor and brake. Commutators or slip rings, where provided, should be observed for excessive sparking or brush chatter. Inspect bearings as previously described. Inspect all motor fastening bolts to determine whether they are in place and tight.

9.6.13.2 Inspection Made with Power Off. Open the mainline switch and examine brush holders, commutators or slip rings. Determine the condition of the brush holders and brushes and whether any brush is stuck in its holder or is worn to the extent that either brush holder or the metal connector on the brush could touch the commutator or slip ring. If sparking or chattering was noticed when the machine was running, check the brush spring pressure. Examine the commutator or slip rings to determine if they are burned, pitted, grooved, or scored, and are clean and free from oil. Also check the commutators for high mica conditions. Become very familiar with these signs and be constantly on the lookout for them. Hoist performance is directly related to good electrical continuity through the commutator or slip rings. Check the slots of the commutator for any accumulation of carbon, copper dust, oil, or other substances. Check exposed armature and field terminal connection to see that they are tight. Special attention should be given to the shunt field connections of DC motors. Loose connections here could result in a runaway condition. Connections not properly made may result in poor electrical conduction and points of resistance. This condition creates heat. Examine the leads to be sure they are not broken or their insulation is not cracked or broken. Improper adjustments can force motor winding to carry more current, which produces heat, which will cause insulation to deteriorate. Check to see that the motor windings are free of oil, dust, or lint deposits. Accumulations restrict cooling air circulation, causing heat build-ups, which result in poor performance, insulation damage, and possibly fire.

9.6.14 Driving-Machine Brake

9.6.14.1 Inspection Made with Power On. Close the mainline switch and proceed. Run the car and observe the operation of the brake. The brake should not chatter. It may apply on or before the completion of the slowdown and leveling operation. Check to see that the brake is automatically applied on normal stops. The clearance between the brake shoe and the brake drum when the car is running should not be greater than necessary to permit free running. Examine the brake pins to determine whether they are properly lubricated and not frozen, and that the cotter pins are in place and open. Note any harsh and abrupt brake action. Motors of motor-operated brakes should be examined as described previously. In addition to the above, on mechanical brake installations, note that the operation of the brake actuating device releases the brake only when power is applied in the machine. Many control systems, by design, stop the elevator electrically when it reaches the floor, then allow the brake to set. This is done to prevent a bump on stopping, which is caused when the brake sets. Brake operation should be checked, where applicable, to see that this feature is working properly.

9.6.14.2 Inspection Made with Power Off. Open the mainline switch and proceed. Examine the brake and-drum to determine that the brake linings are free of oil and whether there is any scoring of the drum. The design of the actuating linkage of some brakes is such that a single unit or link is used both to govern the spring pressure applying the brake shoes when the brake applies and the amount of clearance between the brake shoes and the brake drum when the brake is released. With this type of design, it is possible to improperly adjust the releasing feature so that it will prevent the brake application. The adjustment of this type of brake should be examined to determine that the adjustment is such that the brake shoes are not prevented from properly applying and that there is sufficient margin in the adjustment for the brake lining wear. Be sure to check the oil level of oil immersed coil type brakes. Also, the brake coil leads, connections, and windings should be examined to check insulation conditions and physical connections. In addition many brakes have electrical contacts that are used in various control functions. These should be checked to assure proper contact operation, insulation on wire and contacts, and condition of connections.

9.6.15 Motor-Generator Sets Used With Generator-Field Control

Motor-Generator sets and exciters that are part of the hoist control system should operate smoothly without excessive noise or vibration and should be inspected as previously described for driving machine motor. Motor-Generator sets and rectifying units used to convert AC to DC for the operation of one or more dumbwaiters, but which are not one of the units of

the generator-field control system, are not considered to be part of the hoist equipment.

9.6.16 Control Equipment

The following inspection procedure applies to all the control mechanisms, including starting panels for motor-generator sets that are part of the hoist control system, signal panels, hoist controller panels, dispatching panels, selectors, etc. A good preventive maintenance program on the control equipment will greatly reduce shut downs. Many controllers have pieces of rotating equipment that are part of the controller and that are applied in various functions. These should not be overlooked. They should be given the same type of inspection as the larger rotating equipment.

9.6.16.1 Inspection Made with Power Off. Open the mainline switch and examine all relays, switches, contactors, control circuit rectifiers, transformers, capacitors, reactors, vacuum tubes, etc., and note:

a. Any excessively worn or burned contacts broken connectors, broken or cracked resistance grids or resistance tubes.

b. Any fuses which are shorted with wire, solder or metal strips.

c. Whether the equipment is clean.

d. Any accumulation of combustible materials especially on resistance grids or wires, or on control circuit rectifiers (a common cause of fire).

e. Whether contacts of reverse-phase relay, where provided, are open.

f. Excessively worn pin hinges on relays or contactors.

9.6.16.2 Inspections Made with Power On. Close the mainline switch and proceed. observe the operation of the control equipment when the dumbwaiter hoist is run in each direction. Note any arcing of contacts, excessive heating of coils or resistances, and misalignment of relays, contactors, and switches. Hoist performance must also be checked and compared with previous test data and criteria. This would include door operation, acceleration, deceleration, and floor stopping accuracy. This will determine if the system is operating at its full potential or if adjustments are needed to obtain a system operating at design capabilities. Unusual noises should also be noted.

9.6.17 Speed Governor

Inspection of the speed governor is a very critical part of the inspection. The A10.4 Code specifically addresses the inspection requirements for this device. It is one half of the function that makes elevators safe; the car safety device is the other half. The certified inspector should follow the steps outlined as close as possible to assure nothing is overlooked. Always be aware that governor parts do wear, and governors do have to be rebuilt or replaced. Leaking or exposed lubrication is a good indication of deteriorating seals (enlarged openings resulting front wear or worn gears). Also, be sure governor seals are in place and that they are properly located. The seal most used is the lead block and wire type, but there are other types which provide the same degree of security. The seal is used to indicate whether adjustments have been modified from set position. Be sure that seals are placed in such a position that it is broken if adjustment changes are made. occasionally, seals are found in a position that modification can be made and the seal remains intact. Mistakes in the type or size of governor rope are often found. Governors are designed to operate with a specific size and type of rope. Any change will alter the operation of the car stopping mechanism. An example of this is a rope of smaller than design diameter, which could allow the governor jaw to close without gripping the governor rope, resulting in the car safety not applying.

9.6.18 Machine Room

Check the machine room for the following:

a. Adequate lighting.

b. Housekeeping and the presence of any flammable liquids (flash point less than 110 degrees F) or materials not necessary for the operation and maintenance of the elevator.

c. Check that adequate ventilation by natural or mechanical means has been provided to insure safe and normal operation of the dumbwaiter. Check local codes to see that machine room ventilation is in compliance. With the newer type of control equipment, ventilation is even more critical.

d. Fire extinguisher, proper class, mounting, and maintenance record tag. They should be properly mounted and maintained.

e. Machine rooms and machinery spaces are vulnerable areas. They are assumed to be great storage areas. Navy policy is that they are not to be used for storage of non-elevator related items. Absolutely no flammable items are permitted. It is the responsibility of the inspector to insure proper use of these areas.

9.6.19 Machine Room Access

Check that safe and convenient means of access to machine rooms and machinery spaces have been provided and maintained. Check stairways and ladders to see that they are stable and secure. Also check to see that the access is not infringed on by construction changes. The access door is required to be self-closing and self-locking and is to be maintained in the closed position. In addition, Navy policy is that the machine rooms are controlled access areas, to be secured by lock and key or combination locks.

CHAPTER 10

MANLIFTS

10.1 INTRODUCTION

NOTE: Paragraphs identified with a vertical line in the left margin are inspections that should be made by certified Vertical Transportation Equipment Inspectors only.

10.1.1 Scope

The inspection of manlifts included in this chapter is not only an inspection of all safety related functions, but is also an inspection to determine the condition of the equipment and identify areas that need improvement. Proper maintenance is needed to keep the manlift operating. When preventive maintenance is lacking, shut downs will occur. In this chapter we will identify specific published safety standards which relate directly to the inspection procedure being followed in this text. It is intended that each noted standard should be reviewed as it is identified. Safety as well as performance considerations of the inspection will be addressed in the following text. See Figures 10-1 and 10-2, which show various manlift arrangements with component names that will be used in this chapter.

10.1.2 Purpose

The purpose of this inspection is to review the entire manlift installation to ascertain that the equipment is being properly maintained and is in a safe operating status. Because the operation and use of manlifts are by nature very dangerous, the inspection should be directed toward those areas such as safety ropes, limit switches, belt integrity and guards, standing and boarding surfaces and the treads and handholds that directly relate to the safe operation by the user personnel.

10.1.3 Use

Manlifts are generally used to transport working personnel in flour and feed mills, paper pulp plants, warehouses, filtration plants, power plants, chemical plants, and parking garages. They are provided for the exclusive use of certain designated operating or maintenance personnel when vertical transportation of such persons is required for a distance of two or more floors. No persons other than such employees are permitted to ride on the units.

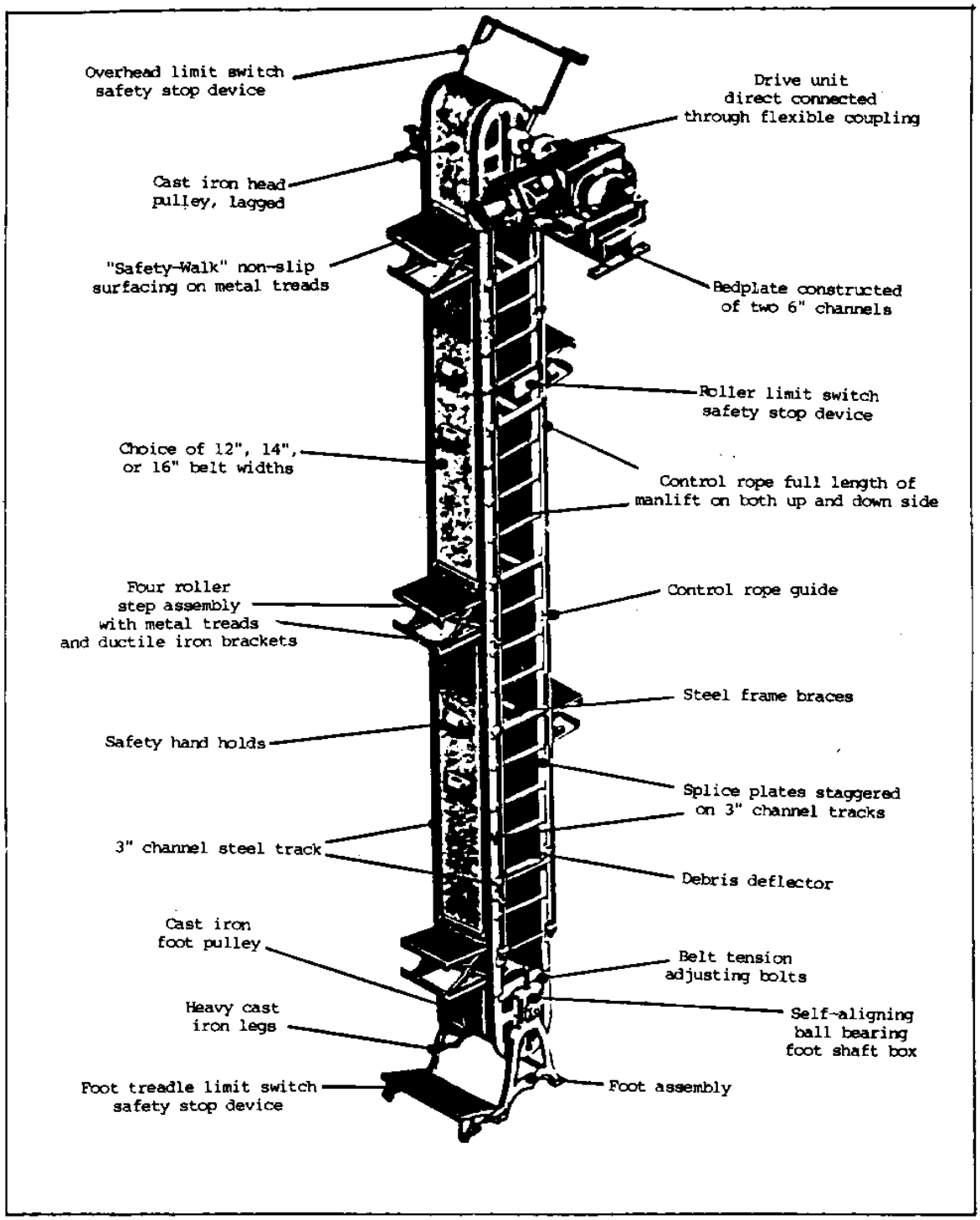

FIGURE 10-1
Typical Manlift

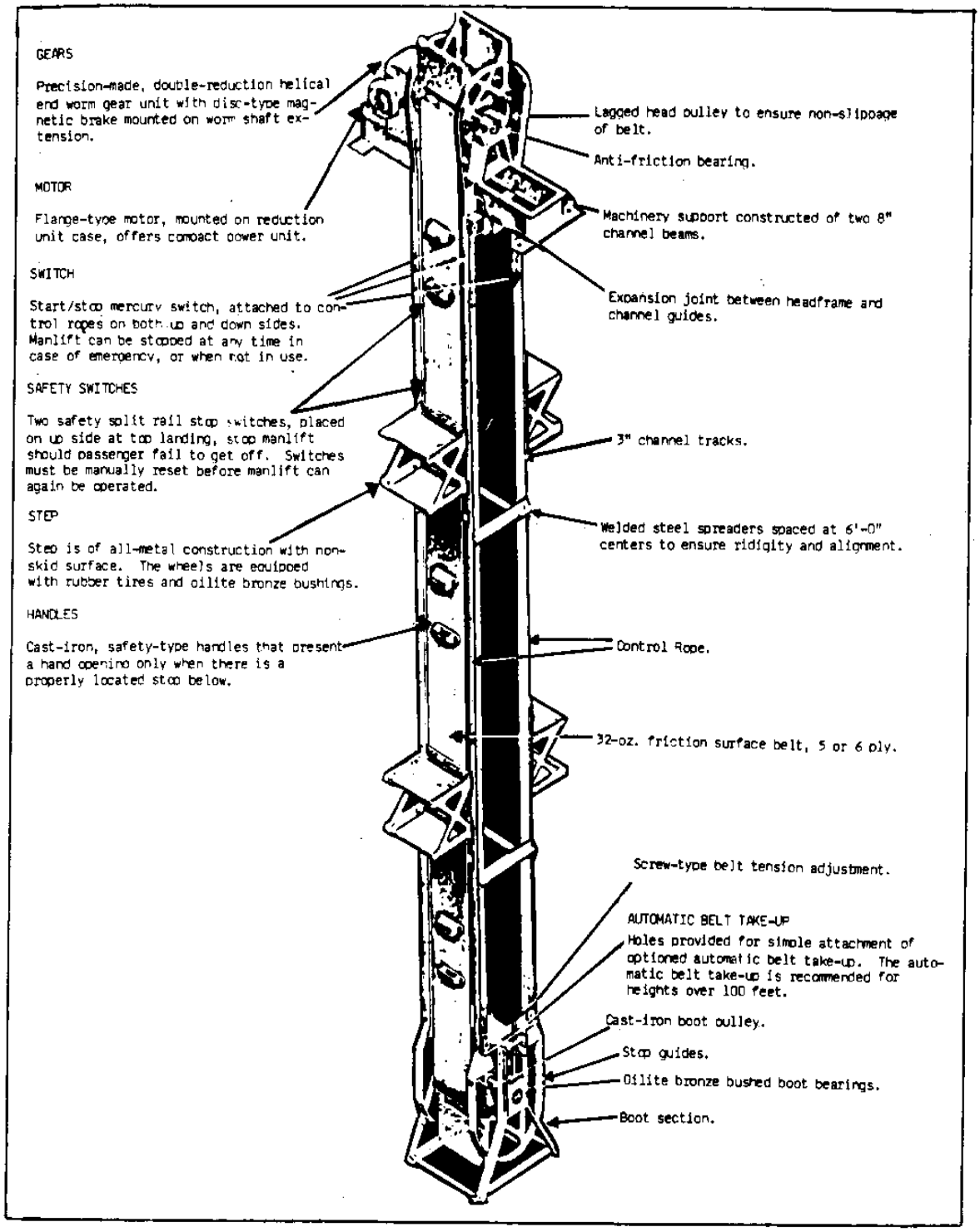

FIGURE 10-2
Typical Manlift

10.1.4 Applicable Safety Standards

The applicable safety standards for the construction, maintenance, inspection and operation of manlifts is contained in ANSI A90.1-1976 Safety Standard for Manlifts and section 1910.68 of the Federal OSHA Standards for Manlifts. Many state and municipal code inspection authorities also publish safety standards for manlifts. Because there have been many incidences of accidents to persons on or about manlifts with numerous fatalities, a number of local code enforcement bodies have outlawed their use. The Navy does not allow any new manlifts to be installed for this very reason.

10.1.5 Inspection Interval

Both the A90.1 Code and the OSHA Section 1910.68 require the periodic inspection of the following items at not more than 30 day intervals:

a. Belt and Belt Joints
b. Bottom (Boot) Pulley and Clearances
c. Bottom Pulley Supports
d. Bottom Pulley Takeup
e. Brake
f. Drive Mechanism and Couplings
g. Electrical Switches
h. Floor Landings - Slippery Conditions
i. Guardrails
j. Handhold Fastenings
k. Illumination
l. Limit Switches
m. Lubrication
n. Drive Motor & Coupling
o. Pulley Lagging
p. Pulley Supports
q. Rail Supports and Fastenings
r. Rail/Track
s. Rollers and Slides
t. Rope Control Stop
u. "Skip" on Up or Down Run When Mounting Step (Indicating Worn Gears)
v. Steps
w. Step Fastenings
x. Top Pulley
y. Vibration and Misalignment
z. Warning Signs and Lights
aa. Safety stops - inspect weekly

Man Lift found to be unsafe shall not be operated until properly repaired. Limit switches should be checked weekly. The sample Belt Manlift Inspection Report included at the end of this chapter was taken from the appendix of the A90.1 Standard should be utilized for recording the weekly and monthly inspections.

10.2 INSPECTION PROCEDURES

10.2.1 Controlled Access

When manlifts are located in buildings, such as parking garages, to which the public has access, make certain they are located in an enclosure protected by self-closing, spring-locked doors, at all floors to which the public has access. Keys to such doors shall be limited to employees. In lieu of spring-locked doors, which require a key, a magnetic-type lock is permitted if the actuating pushbutton is located not less than seven feet above the floor in an inconspicuous location.

10.2.2 Floor Openings

Floor openings for a manlift should be uniform in size, be approximately circular, and be located vertically above the opening below it. Floor openings for both up and down runs should generally conform to the following:

Belt Width (in inches)	Floor Opening Width (in inches)
12	28 - 32
14	34 - 48
16	36 - 40

Floor openings should extend not less than 24 inches nor more than 28 inches from the face of the belt.

10.2.3 Illumination

Adequate lighting of not less than three foot-candles should be provided at each floor landing at all times when the manlift is in operation. Check with a calibrated light meter. Both runs of a manlift should be illuminated at all times when it is in operation. A level of not less than one foot-candle should be maintained at all points.

10.2.4 Landings

The floor space adjacent to floor openings should be free from obstruction and kept clear at all

times. The landing surfaces at the entrances and exits to manlifts should be so constructed and maintained as to provide safe footing at all times. When there is a travel of 50 feet or more between floor landings, one or more emergency platforms should be provided so that there is a landing, either floor or emergency, for every 25 feet or less of travel. Such emergency landings should be accessible from both runs of the manlift and should give access to emergency exit ladders. Emergency platforms should be enclosed with a standard railing and toeboard.

10.2.5 Landing Guards

On the ascending side of a manlift, the landings should be provided with a bevel guard or cone (See Figure 10-3) meeting the following requirements:

a. The cone should make an angle of not less than 45 degrees with the horizontal. An angle of 60 degrees or greater may be used where ceiling heights permit.

b. The guard should extend at least 36 inches outward from the face of the belt, but not beyond the upper surface of the floor above.

c. The cone should be made of not less than No. 18 U.S. gage sheet steel or material of equivalent strength or stiffness. The lower ledge should be rolled to a minimum diameter of 1/2 inch and the interior should be smooth with no rivets, bolts, or screws protruding.

d. It should be noted that cones on the down run of the belt serve as fairly effective fire stops and tend to prevent the loss of warm air from lower floors.

10.2.6 Floor Opening Guards

The floor opening at each landing should be guarded on sides not used for entrance or exit by a standard railing and toeboard or by approved panels or wire mesh. Such rails or guards should be at least 42 inches in height on the up-running side and 66 inches on the down-running side. Rails or guards should be located not more than one foot from the edge of the floor opening.

10.2.7 Protection Of Entrances And Exits

The entrances and exits at all floors or landings affording access to a manlift should be guarded by a maze (staggered railing) or a handrail equipped with self-closing gates. Such rails should be standard OSHA approved guardrails with toeboards. Gates, if used, should open outward and be self-closing. Corners of such gates should be rounded. Maze or staggered openings should offer no direct passage between enclosure and outer floor space.

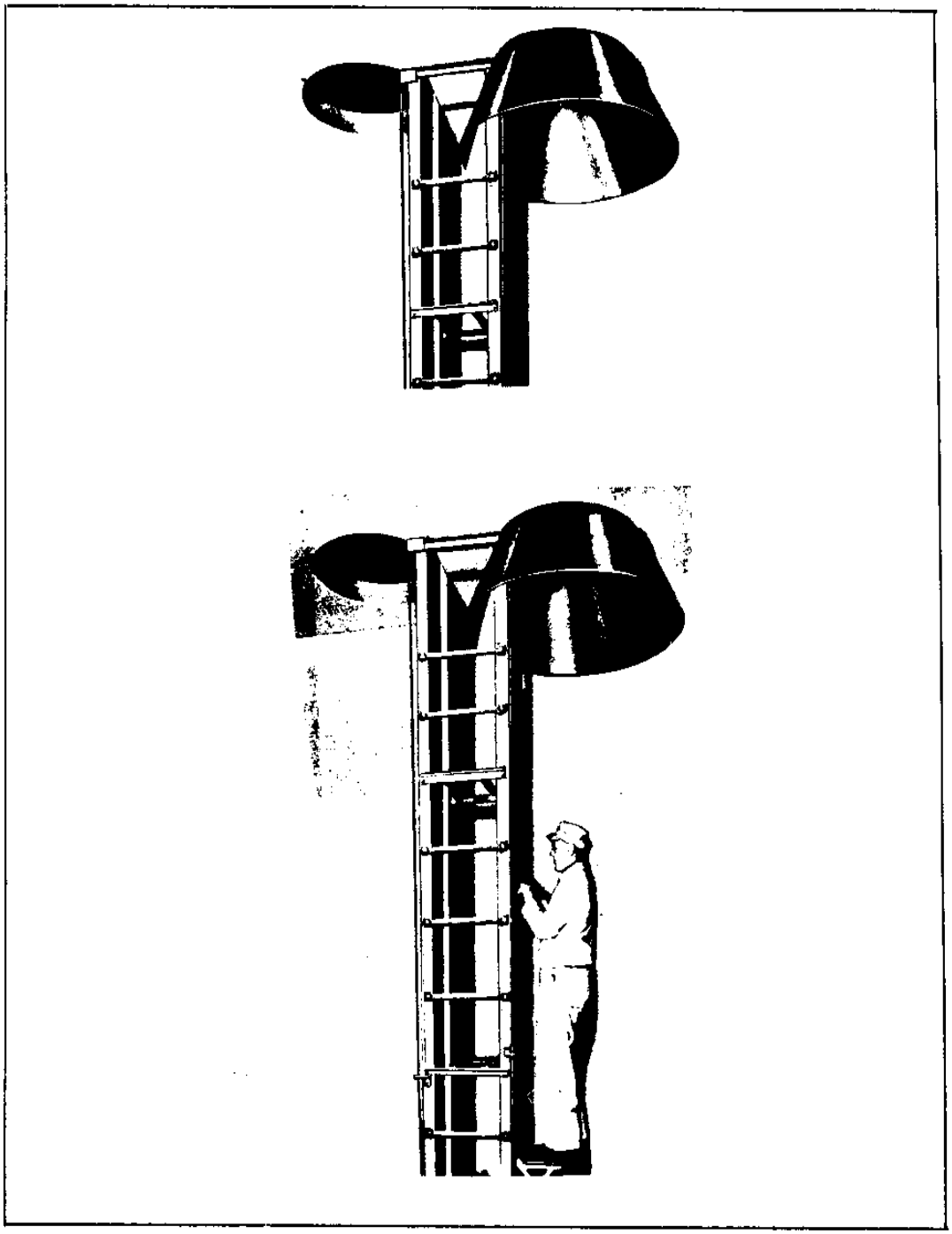

FIGURE 10-3
Typical Hood Application

10.2.8 Bottom Arrangement

At the bottom landing the clear area should not be smaller than the area enclosed by the guardrails on the floors above, and any wall in front of the down-running side of the belt should be not less than 48 inches from the face of the belt. Such space should not be encroached upon by stairs or ladder. The lower, or boot pulley should be installed so that it is supported by the lowest landing served. A mounting platform should be provided in front or to one side of the up-run at the lowest landing, unless the floor level is such that the floor or platform is at or above the point at which the upper surface of the ascending step assumes a horizontal position.

10.2.9 Top Clearances

A minimum top clearance of 11 feet should be provided above the top terminal landing. No encroachment of structural or machine-supporting members within such space is permitted. There should be a clearance of at least five feet between the center of the head pulley shaft and any ceiling obstruction. The center of the head-pulley shaft should not be less than six feet above the top terminal landing.

10.2.10 Emergency Exit Ladders

A fixed metal ladder accessible from both the up and down-run of the manlift should be provided when the vertical distance between landings exceeds 20 feet.

10.2.11 Drive Machine

10.2.11.1 Type. Machines can be of the direct-connected type or driven by multiple V-belts. Cast iron gears should not be used.

10.2.11.2 Brake. A mechanically-applied, electrically released brake must be applied to the motor shaft for direct connected units or to the input shaft for belt-driven units. The brake should be capable of stopping and holding the manlift when the descending side is loaded with 250 pounds on each step. observe the brake operation to make certain it applies when the manlift is stopped and electrically releases when the unit is started.

10.2.12 Belt

10.2.12.1 Material. The belts can be made of hardwoven canvas, rubber-coated canvas, leather, or other material meeting the strength requirements of the applicable codes and having a coefficient of friction such that when it is used in conjunction with an adequate tension device, it will meet the brake test specified in the applicable codes.

10.2.12.2 Width. The width of belts should conform to the following:

Minimum Width (in inches)	Total Travel (in feet)
12	0 - 100
14	100 - 150
16	More than 150

10.2.12.3 Strength. The strength of belts should be not less than 1,500 pounds per inch of belt width for belts having a distance between pulley centers not in excess of 100 feet, and 1,800 pounds per inch of belt width for belts having a distance between pulley centers of over 100 feet, but not in excess of 200 feet for over 200 feet, 2,450 pounds per inch of belt width.

10.2.13 Belt Fastenings

Belts can be fastened by a lapped splice or by a butt-splice with a strap on each side of the belt as follows:

a. For lapped splices, the overlap of the belt at the splice must be not less than three feet when the total travel of the manlift does not exceed 100 feet and not less than four feet if the travel exceeds 100 feet.

b. When butt splices are used, the straps must extend at least three feet on one side of the butt for travel, not in excess of 100 feet, and four feet for travel in excess of 100 feet.

For 12 inch belts, the joint must be fastened with not less than 20 special elevator bolts, each of a minimum diameter of 1/4 inch. Such bolts shall be arranged symmetrically in five rows so arranged as to cover the area of the joint effectively. Reference should be made to Figures 10-4 and 10-5. Observe the proper belt splicing procedures. The minimum number of bolts for a belt width of 14 inches shall be not less than 23 and for belt widths of 16 inches, the number of bolts shall be not less than 27.

10.2.14 Pulleys

Drive pulleys and idler or boot pulleys should have a diameter of not less than 20 inches.

10.2.15 Pulley Protection

The machine must be so designed and constructed as to catch and hold the driving pulley in the event of shaft failure.

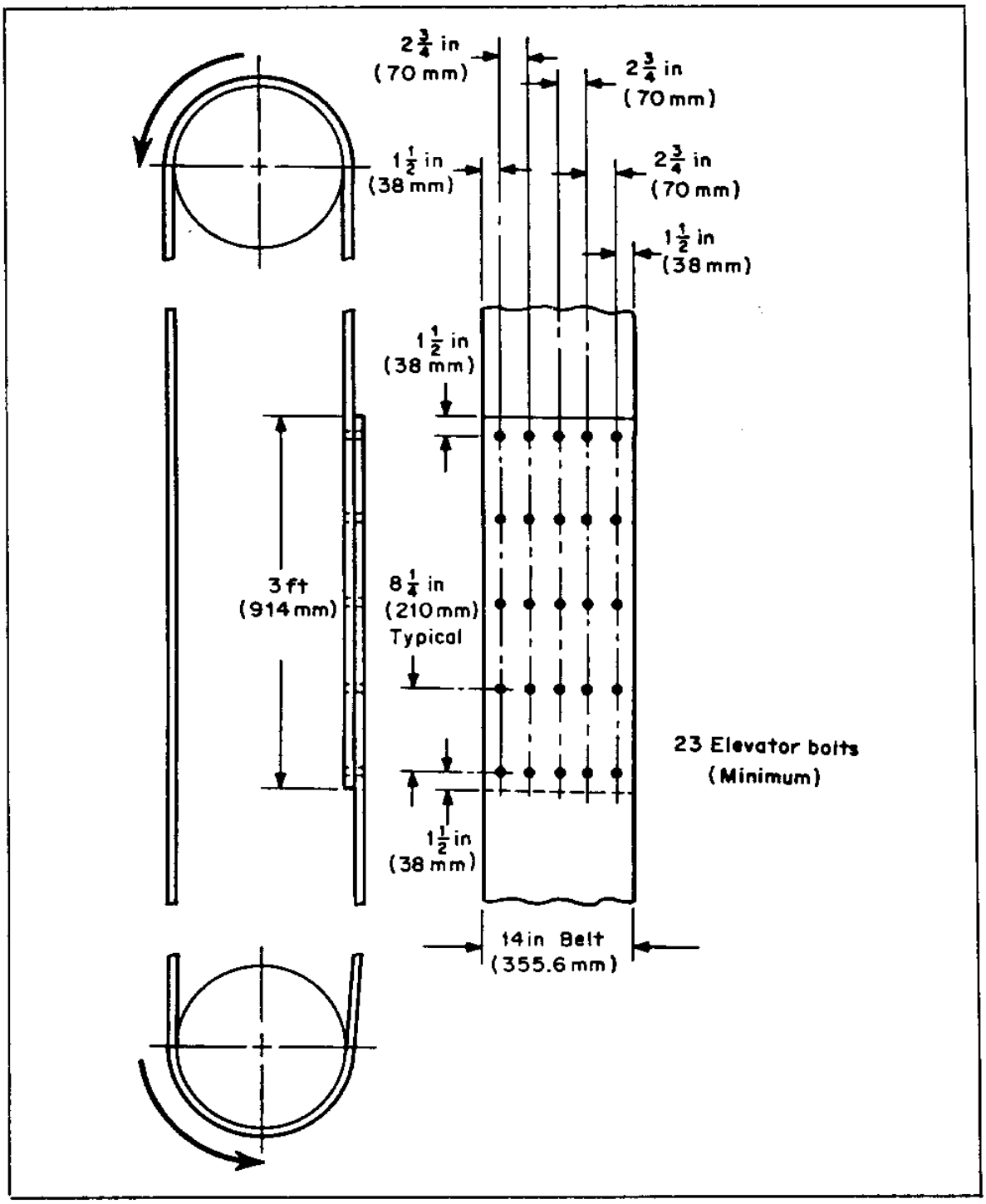

FIGURE 10-4
Typical Lap Joint Detail

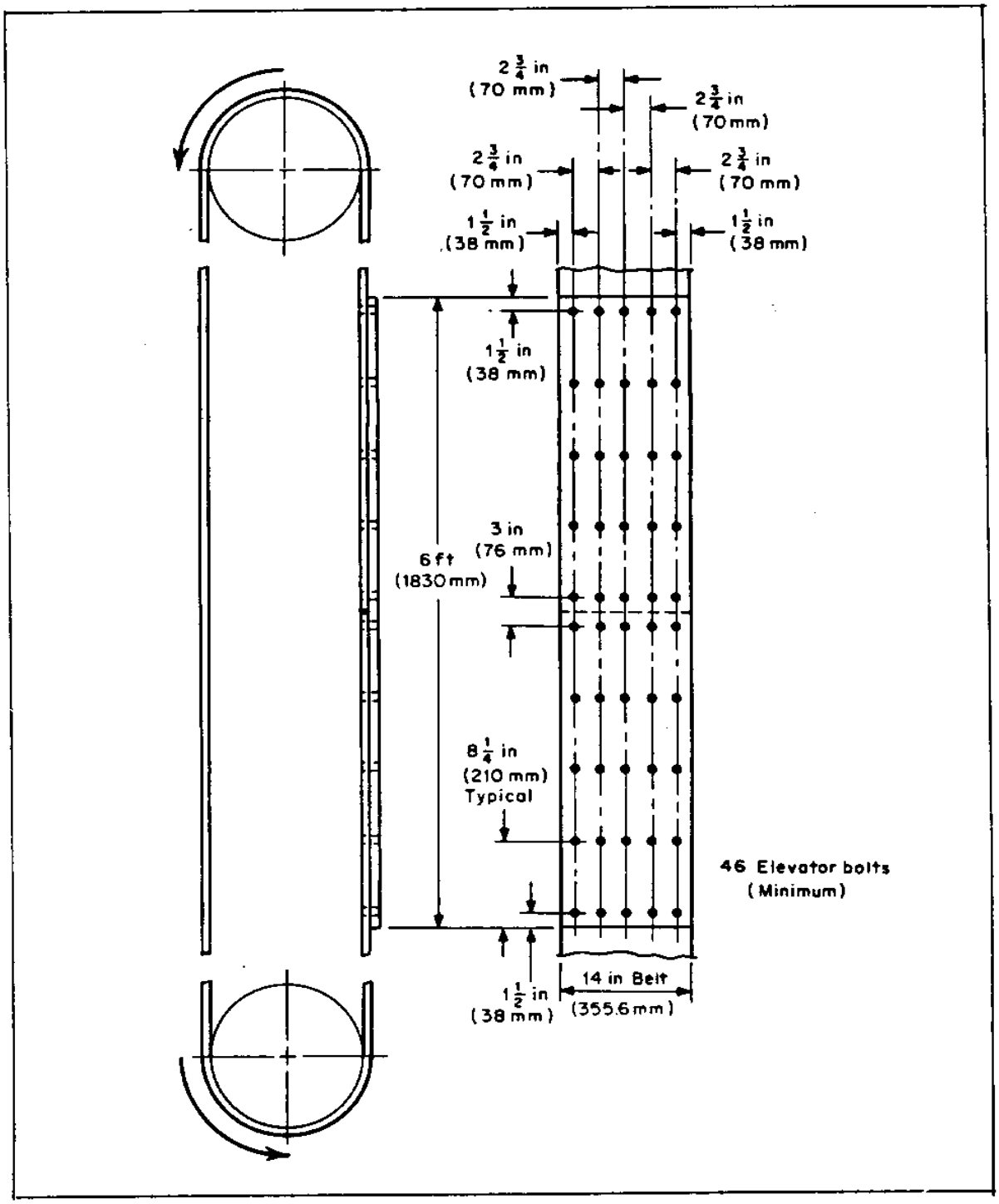

FIGURE 10-5
Typical Butt Joint Detail

10.2.16 Speed

The manlift speed should not exceed 80 feet per minute. Measure it with a hand held tachometer running on the belt.

10.2.17 Steps

10.2.17.1 Size. Steps or platforms should be not less than 12 inches nor more than 14 inches deep, measured from the belt to the edge of the step or platform. The width of a step or platform should not be less than the width of the belt to which it is attached.

10.2.17.2 Spacing. The distance between steps should be equally spaced and not less than nine feet, measured from the upper surface of one step to the upper surface of the step above it.

10.2.17.3 Surface. The surface of step should approximately make a horizontal position with the up and down-run of the belt. The upper or working surfaces of steps should be of a material having inherent nonslip characteristics or be covered completely by a securely fastened nonslip tread.

10.2.17.4 Strength. When subjected to a load of 400 pounds applied at the approximate center of the step, step frames or supports and their guides should be of adequate strength to prevent any of the following:

a. The disengagement of any step roller.

b. Any appreciable misalignment.

c. Any visible deformation of a step or its support.

10.2.17.5 Inspection. No step should be provided unless there is a corresponding handhold above or below it. If a step is removed permanently for repairs, the handholds immediately above and below it should be removed before the lift is again placed in service. Inspect each step platform and report any damaged or deficient units.

10.2.18 Handholds

Handholds attached to a belt must be provided and so installed that they are not less than four feet nor more than four feet eight inches, above the step tread, and shall be so located as to be available on both the up and down-run of the belt. The grab surface of handholds should be not less than 4-1/2 inches in width.

Fastenings should not come within one inch of the edge of the belt. Handholds should be the closed type to minimize the possibility of fingers, rings, bracelets, and watch bands getting caught in them. Handholds must be capable of withstanding without damage a load of 300 pounds applied parallel to the run of the belt. No handhold can be provided without a corresponding step. If a handhold is removed permanently or temporarily, the corresponding step and handhold for the opposite direction of travel must also be removed before the lift is placed in service. Inspect all handholds and report any deficiencies.

10.2.19 Stopping Devices

10.2.19.1 Up Limit Stop. Two separate automatic stop devices should be provided to cut off the power and set the machine brake when a loaded step passes the upper terminal landing. One automatic stop device shall consist of a switch mechanically operated by the belt or step roller. The other shall consist of one of the following:

a. A roller switch placed above and out of line with the first limit switch.

b. A photocell and light source (electric eye).

c. A switch actuated by a lever, rod, or plate, the latter placed above the head pulley so as to just clear a passing step. After the manlift is stopped it shall be necessary to reset the automatic stop manually. The device shall be so located at the top landing that a person resetting it shall have a clear view of both the up and down-runs of the manlift. It shall not be possible to reset the device from any step or platform. The stopping device shall function so that the manlift is stopped before the loaded step has reached a point 24 inches above the top terminal landing.

10.2.19.2 Down Limit Stop. An automatic stop device shall be provided to cut off the power and apply the brake if a loaded step passes the bottom terminal landing.

10.2.19.3 Emergency Stop. An emergency stop means shall be provided. The stop means shall be within easy reach of the ascending and descending runs of the belt and shall be so connected with the control lever or operating mechanism that it cuts off the power and applies the brake when pulled in the direction of travel. The stop device may consist of a cotton rope with a wire center, manila or sisal rope, or may be made of suitable lengths of metallic pipe or tubing. If rope if used, it should be not less than 3/8 inch in diameter. The emergency stop may be used for normal starting and stopping, where the manlift does not run continuously.

10.2.19.4 Inspection of Devices. Inspect each stopping device and test each unit for proper operation to make sure they will stop the manlift and report any deficiencies.

10.2.20 Signs

10.2.20.1 Operating Instructions. Signs for using the manlift shall be posted at each landing or stenciled on the belt. Such signs should be of letters not less than one inch in height and of a color having high contrast with the surface on which it is stenciled or painted, such as white or yellow on black or black on white or gray. The instruction shall read approximately as follows:

Face the belt.
Use the handhold.
To stop - pull rope.

10.2.20.2 Top floor warning. At the top floor an illuminated sign must be displayed. It shall bear the words, "Top floor - get off." Such signs shall be in block letters not less than two inches in height. The sign shall be located within easy view of an ascending passenger and not more than two feet above the top terminal landing. As an alternate for such a sign, a red light of not less than a 40-watt rating may be provided immediately below the upper terminal landing and so located as to shine in the face of a passenger.

10.2.20.3 Visitor warning. A conspicuous sign having the legend: "Employees only - visitors keep off," shall be displayed at each landing. Such sign shall be of block letters not less than two inches in height and of a color offering high contrast with the background color.

10.2.21 Controls

The following inspection procedure applies to all the control mechanisms, including starting panels for the manlift drive motor. A good preventive maintenance program on the control equipment will greatly reduce shut downs.

10.2.21.1 Inspection Made with Power Off. Open the mainline switch and examine all relays, switches, contactors, control circuit rectifiers, transformers, capacitors, reactors, vacuum tubes, etc. Check for excessively worn or burned contacts, broken connectors, broken or cracked resistance grids or resistance tubes. Any fuses that are shorted with wire, solder or metal strips must be replaced. Check whether contacts of reverse-phase relay, where provided, are open. Examine to see that it is clean. Any accumulation of combustible materials, especially on resistance grids or wires or on control circuit rectifiers, is a common cause of fire. Also look for excessively worn pin hinges on relays or contactors.

10.2.21.2 Inspections Made with Power On. Close the mainline switch and proceed to observe the operation of the control equipment when the manlift is running. Note any arcing of contacts, excessive heating of coils or resistances, and misalignment of relays, contactors, and switches. Manlift speed must also be checked and compared with previous test data and criteria. The speed is checked with a hand held tachometer with its drive wheel directly engaging the moving belt. This will determine if the system is operating at its full potential or if adjustments are needed to obtain a system operating at design capabilities. Unusual noises should also be noted.

10.2.22 Machinery Area

10.2.22.1 Illumination. Check the machinery area for adequate lighting.

10.2.22.2 Housekeeping. Check the machinery area for housekeeping and the presence of any flammable liquids (flash point less than 110 degrees F) or materials not necessary for the operation and maintenance of the manlift.

10.2.22.3 Ventilation. Check that the machinery area has been provided adequate ventilation by natural or mechanical means to ensure safe and normal operation of the manlift. Check local codes to see that machine ventilation is in compliance.

10.2.22.4 Fire Extinguisher. Check the machinery area for fire extinguisher, proper class, mounting, and maintenance record tag. They should be properly mounted and maintained.

10.2.23 Machinery Area Access

Check that a permanent, safe, and convenient means of access to machinery spaces has been provided and maintained. Check stairways and ladders to see that they are stable and secure. Also check to see that the access is not infringed on by building changes. A prime example is air conditioning being added: the contractor installs a large duct right through the access right of way, requiring the person who enters the space to crawl under the duct. Public safety may be directly dependent on rescue personnel getting to the manlift equipment in a hurry. The access door should be self-closing, self-locking and maintained in the closed position. In addition, Navy policy is that the machinery spaces are considered to be controlled access areas, to be secured by lock and key or combination locks.

BELT MANLIFT INSPECTION REPORT
(Weekly & Monthly)

Location _____ Date _____

Manlift Make & Serial No. _____ Code _____

	ITEM	PERIOD Weekly	PERIOD Monthly		ITEM	PERIOD Weekly	PERIOD Monthly
1	OBSERVE MANLIFT IN OPERATION FOR POSSIBLE DEFECTS	( )	( )	19	TOP LANDING SAFETY SWITCHES	( )	( )
2	STEPS AND ROLLERS		( )	20	TOP BAR SAFETY	( )	( )
3	HAND HOLDS		( )	21	PHOTO EYE SAFETY (IF APPLICABLE)	( )	( )
4	BELT JOINT		( )	22	ON-OFF SWITCH & CONTROL ROPE (TEST UP & DOWN RUN)	( )	( )
5	BELT (LOOK FOR CUTS OR DAMAGE)	( )	( )	23	STEP CLEARANCE AT DRIVE BELT TRACKING AT DRIVE	( )	( )
6	BELT TENSION AND BELT TAKE-UP AT BOTTOM PULLEY	( )	( )	24	MOTOR		( )
7	STEP CLEARANCE AT BOOT	( )	( )	25	BRAKE		( )
8	BELT TRACK ON BOTTOM PULLEY	( )	( )	26	GEAR REDUCER & CHECK OIL LEVEL & CHANGE PER MANUAL		( )
9	BOTTOM BEARING LUBRICATION & SUPPORT		( )	27	COUPLINGS – COLLARS – KEYS		( )
10	GUIDE RAILS, PROPER ALIGNMENT FASTENINGS & SUPPORT		( )	28	HEAD SHAFT BEARINGS AND LUBRICATION		( )
11	FLOOR BRACES FOR GUIDE RAILS		( )	29	TOP PULLEY AND LAGGING	( )	( )
12	FLOOR HOODS AND OPENINGS		( )	30	OVERALL DRIVE ASS'Y AND SUPPORTS		( )
13	SAFETY SWITCHES ON MOVEABLE HOODS	( )	( )	31	SKIPPING WHEN MOUNTING STEP (CHECK DRIVE TRAIN)		( )
14	GUARD RAILS AND GATE OPERATION	( )	( )	32	VIBRATION OR MISALIGNMENT IN DRIVE		( )
15	FLOOR LANDINGS (CLEAR OF OBSTRUCTION)	( )	( )	33	GREASE BEARINGS PER MAINTENANCE MANUAL		( )
16	ILLUMINATION OF MANLIFTS AND FLOOR LANDINGS	( )	( )	34	GUIDE TRACK FREE OF FOREIGN MATERIAL AND LUBRICANTS	( )	
17	TOP & BOTTOM FLOOR WARNING SIGNS & LIGHTS	( )	( )	35			
18	BOTTOM SAFETY SWITCHES TREADLE &/ OR DROPOUTS	( )	( )	36			

IS MANLIFT BEING PROPERLY USED? _____ BY AUTHORIZED PERSONNEL? _____

ITEM NUMBERS ABOVE THAT WERE CORRECTED OR ARE IN NEED OF SUCH
(GIVE COMPLETE DESCRIPTION ON BACK SIDE OF THIS FORM)

INSPECTED BY _____ DATE _____

FIGURE 10-6
Sample Belt Manlift Inspection Report

CHAPTER 11

AUTOMOBILE LIFTS

11.1 INTRODUCTION

11.1.1 Scope

The inspection procedure of automobile lifts included in this chapter is not only an inspection of all safety related functions, but is also an inspection to determine the condition of the equipment and identify areas that need improvement. Proper maintenance is needed to keep the lift operating. When preventive maintenance is lacking, shutdowns will occur. Safety, as well as maintenance and performance considerations of the inspection, will be addressed in the following text. See Figures 11-1 and 11-2, which show typical automobile lift arrangements with component names that will be used in this chapter.

11.1.2 Purpose

The purpose of this inspection is to review the entire lift installation to ascertain that the equipment is being properly maintained and is in a safe operating status. Because of the wide spread use and exposure to the public, the inspection should be directed toward those areas of greatest exposure and directly related to the safe operation by the user personnel.

11.1.3 Use

Automobile lifts are used to raise motor vehicles for the purpose of servicing the underside. They are provided for the exclusive use of certain designated personnel.

11.2 LIFT PLATFORM INSPECTION

11.2.1 General - Safety Precautions

If there is an adjacent lift (or lifts), be careful to remain within the limits of the operating space of the lift being inspected. Be alert to actions and activities of personnel operating lifts which may be located adjacent to the lift you are inspecting.

11.2.2 Lift Platform

Determine that the lift yokes, drive-in saddles, and rail structures are structurally sound and are securely fastened.

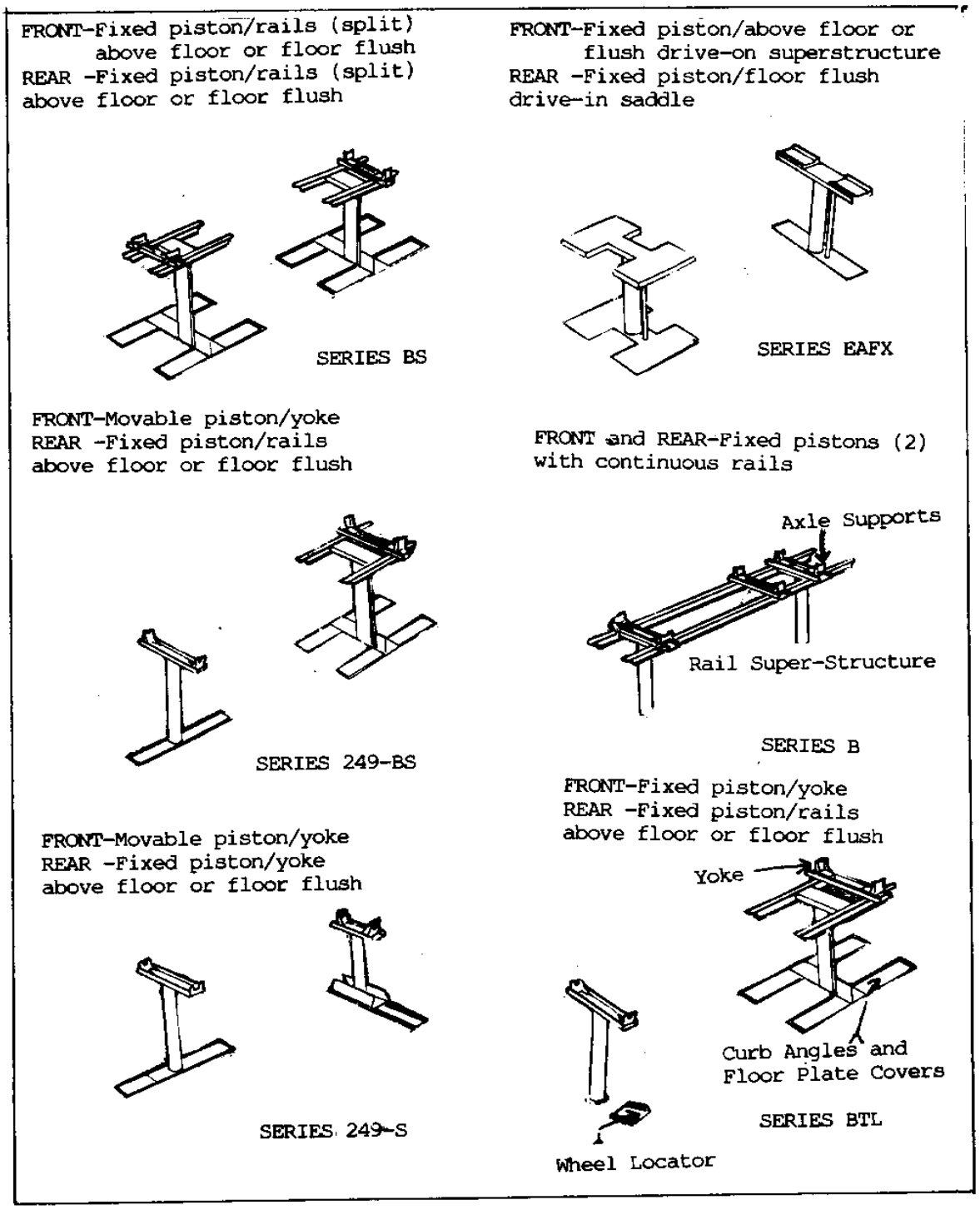

FIGURE 11-1
Typical Lift Configurations

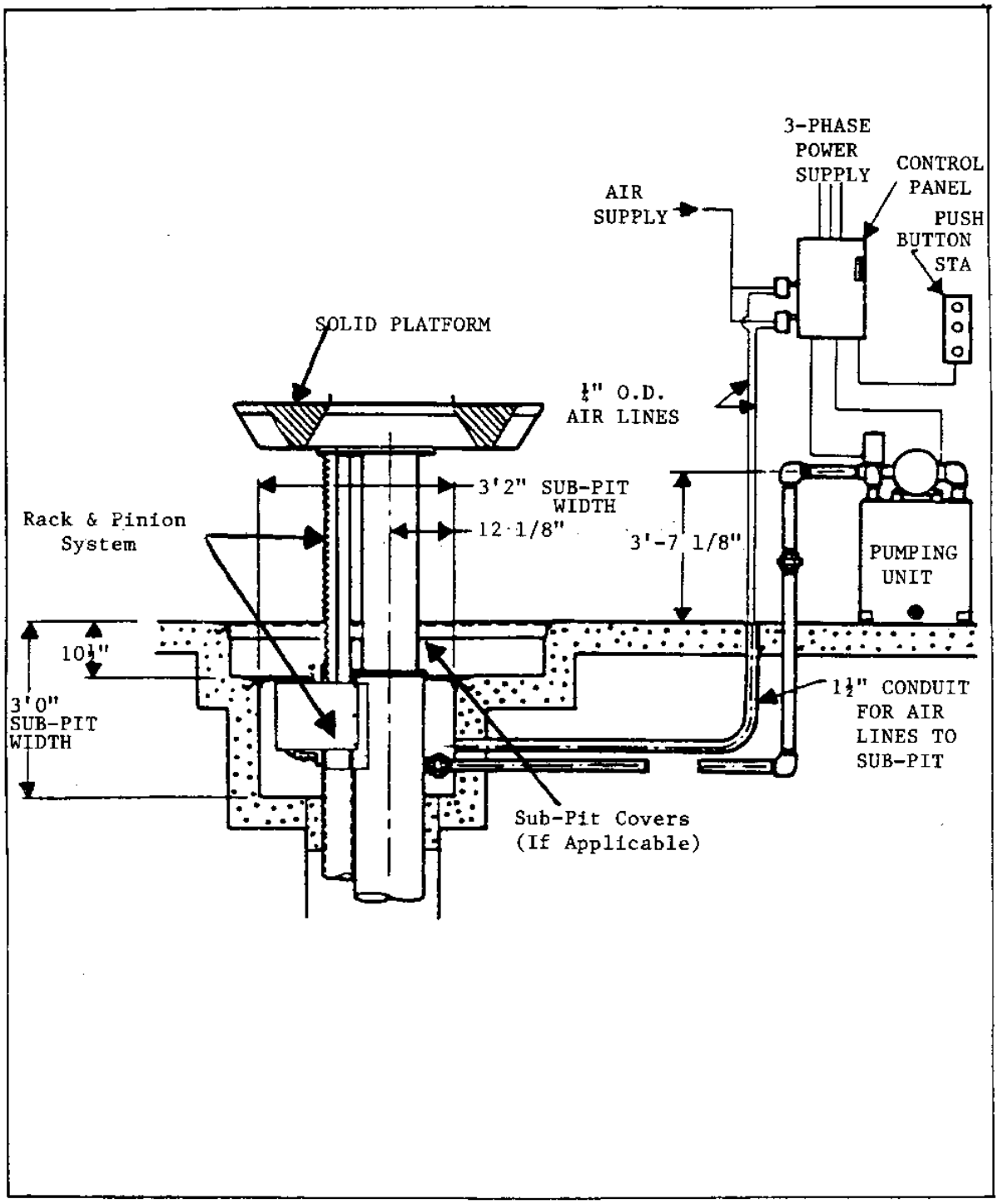

FIGURE 11-2
Typical Lift Installation

Distorted or straightened members, blistered paint, extruded rust from between members or around bolts or rivets, and oil bubbles on members may be clues to a cracked or fractured member. Where examination reveals the possibility of a fracture, a complete check should be made. Report any evidence or alterations or additions to the platforms or yokes that have materially changed the structural integrity. On lifts that have full drive on platforms, verify that all toe guards and skirts are provided on all four sides to protect against shear edges. These skirts should be painted with a highly visible color such as yellow or orange.

11.2.3 Rack And Pinion Equalizers

Inspect the bar racks for signs of excessive wear or damage to teeth. Verify that latching mechanisms fully engage rack to lock lift position when stopped. Pinion equalizer drive shafts should be inspected to determine that connections are sound between units.

11.2.4 Non-Rotating Device

Some single piston lifts are installed with a smaller secondary telescoping cylinder to keep the lift platform from rotating when in the raised position. These units should be checked for alignments and proper lubrication.

11.2.5 Cylinders

Below ground cylinders to direct-plunge lifts cannot be visually inspected. The cylinder head and its fastenings should be examined for defects or corrosion. The packing should be examined for excessive leakage. Determine that means are provided to collect any leakage. If provision is made to return leakage to the reservoir, the operation of this device should be checked. If cylinders are the movable type, rollers and guide rails should be checked for ease of movement and excessive wear.

11.2.6 Plungers

Examine the plunger for any pitting, scoring, excessive wear, or corrosion of metal. Determine if there is any evidence of excessive play of the plunger in the cylinder indicating excessive wear of the plunger guides.

11.2.7 Plunger Fastenings

Examine the fastenings of the plunger to the lift platform or yoke structure.

11.2.8 Oil And Air Lines

The oil supply line between the cylinder and the control valve should be checked for freedom from corrosion, leaks, excessive vibration, and adequate support. A similar review should be conducted of any air lines to ensure that rack and pinion equalizers, as applicable, are there.

11.2.9 Drifting Of Lift Platform

Drifting of a hydraulic lift may be an indication of a potentially hazardous situation and should be carefully investigated to determine the cause of the drifting. This information is necessary so that a decision can be made as to whether it is safe to allow the lift to continue in service. Cylinders that cannot be inspected visually should be tested in the following manner with no load on the lift. Locate and mark the location of the lift at any convenient position. open the disconnect switch for 15 minutes. Note the position of the lift platform with respect to the reference mark. A change in lift position that cannot be accounted for by visible oil leakage or temperature change of the oil indicates a leak of the cylinder or in the underground piping and a need for further inspections, tests, or repairs.

11.2.10 Covers And Guards

The inspector should check to see that all covers and guards and sub-pit covers (where applicable) are in place. They are provided to prevent accidental contact with moving devices or exposed electrical components. This protection is not being provided if the cover or guard is not properly mounted in place. Curb angles and throw over plates should be in place (as applicable), be undamaged and fully operational.

11.2.11 Housekeeping

The lift and surrounding area should be kept clean. Build-up of lint, dirt, lubricants, and trash in pits (if applicable), on yokes, brackets and rails presents a serious fire hazard. If pits are present, they should not be used for storage of any materials or fluids.

11.2.12 Operating Speed

The elevator speed should be checked with a tachometer to verify that the lift is operating at rated speed. A lift operating below rated speed is not providing full service and should be adjusted. Occasionally, a lift is found operating over the rated speed.

11.3 PUMP EQUIPMENT

11.3.1 Main Line Switch

The inspector should closely examine the condition of the main line switch before inspecting any moving part because opening the switch may not have removed all power from a particular lift. This condition is very prevalent when lifts share the same pump unit.

11.3.2 Pumps

Pumps should be checked for leakage around the shaft, and for unusual noise which could be caused by cavitation due to a partially plugged suction line or strainer.

11.3.3 Drives (If Applicable)

Belt drives should be checked for wear, initial tension, and reasonable equality of tension among members or a set. Chain drives should be checked for wear, both on the chain and sprockets. Direct-drive couplings, where accessible, should be checked for excessive play.

11.3.4 Relief And Check Valves

Determine whether relief and check valves are provided and properly located. Examine relief valves, where provided, and note their condition and whether there is leakage. Relief valves should have a lead block and wire type seal on the means of adjustment and should be intact. Determine whether the check valve operates to stop and hold the lift when the pump stops.

11.3.5 Flexible Hydraulic Hose And Fitting Assemblies

Examine under working pressure, flexible hydraulic hose and fitting assemblies and flexible couplings installed between the check valve or control valve and the cylinder. Evidence of leakage, slippage or hose fittings, and damage to outer hose covering sufficient to expose reinforcement or distortion or bulging of hose body are cause for replacement of the hose and fitting assembly or the sealing element of a flexible coupling. Check hose and fitting assemblies for proper identification and replacement date.

11.3.6 Storage And Discharge Tanks

Examine the discharge tank for corrosion and leaks. Note whether the tank is covered to prevent entrances of foreign material and is suitably vented to the atmosphere. For electro-hydraulic elevators, determine whether there is sufficient liquid remaining in the tank when the lift is at the highest point of its travel to cover the intake and to prevent cavitation. Means should be provided for indicating the permissible minimum liquid level for equipment.

11.3.7 Operating Valves And Fixtures

Ensure that all operating valves and fixtures are operating in their intended manner and that all fastenings are in place and secure.

11.3.8 Equipment Location

Pump and control equipment access should be unobstructed by building construction or debris. Access space should be clean and free minimum 18" clear on 3 sides of unit.

11.4 PERIODIC INSPECTION AND TESTS

11.4.1 Scope

This section describes various operational tests that are recommended to be performed on a yearly basis. In addition, there are other tests and inspections that should be performed every three years. It should be specifically documented on the inspector's report that these tests have been performed and the dates the tests were made.

11.4.2 Flexible Hydraulic Hose And Fitting Assemblies And Flexible Couplings

Examine flexible hose and fittings assemblies, and flexible couplings, as outlined in Section 3. Flexible hydraulic hose and fitting assemblies should be subjected to a test at three times the working pressure. After six years, they must be replaced; the replacement date should be marked on the hose.

11.4.3 Pressure Tanks

Pressure tanks of hydraulic lifts should be thoroughly cleaned and inspected internally and subjected to a hydrostatic test. The tank should be subjected to a hydrostatic pressure by gradually raising the pressure until it reaches a value of 50% in excess of working pressure, but not greater. The test pressure should be applied for at least one minute and all parts of the tank including seams, rivets, and fittings should be observed while under pressure. Any leaks or evidence of impending failure should be noted.

CHAPTER 12

MECHANIZED PARKING GARAGE EQUIPMENT

12.1 INTRODUCTION

NOTE: Paragraphs identified with a vertical line in the left margin are inspections that should be made by certified Vertical Transportation Equipment Inspectors only.

12.1.1 Scope

This section describes the procedures involved in inspecting a specialized type of mechanized automobile parking equipment that utilizes hydraulic power to raise and lower a dual park or tandem parking platform. This equipment consists of a mobile platform upon which the first automobile is parked. The platform containing the car is then raised and locked into an elevated position so that a second car can be parked under the first.

12.1.2 Purpose

The purpose of this inspection is to review the entire garage lift installation to ascertain that the equipment is being properly maintained and is in a safe operating status. Because the operation and use of this type garage lift is exposed to the public, the inspection should be directed toward those areas such as hydraulic lines, rams, switches, operating levers and guards, loading and boarding surfaces and the safety features that directly relate to the safe operation by the user personnel. Figure 12-1 shows a typical garage lift arrangement and specification.

12.2 INSPECTION PROCEDURES

12.2.1 Landings

Adequate lighting of not less than three foot-candles should be provided at each floor landing at all times when the garage lift is in operation. Check with a calibrated light meter. The floor space adjacent to floor openings should be free from obstructions and kept clear at all times. The landing surfaces at the entrances and exits to lift should be so constructed and maintained as to provide a safe footing at all times.

All dimensions subject to change - confirm current specification prior to construction commitment.

Inside Buildings:
Floor to ceiling height, un-obstructed, 11'8" (350.6cm). Custom built machines available to suit lower ceilings.

Electrical:
220-440 volt, 3 phase or equivalent at power pack location. Other electrical supplies available to special order.

Power Pack:
Subject to machine lay-out, each power pack will operate up to 40 machines.

Machine Weight:
1 complete machine weighs 2250 pounds (1020kg). Necessary live floor loading, 70 pounds per square foot (342kg/m^2).

Vehicles Accepted:
All domestic and imported cars and light pick-up trucks.

Load Capacity:
8,000 pounds (2722kg) each machine.

To Operate Machine
Drive car on to platform, set brake and exit. Push control lever, which causes platform to raise and lock mechanically in 15 seconds. A second car can then be parked under the platform.

Safety Features:
When in "up" position, machines are locked mechanically, requiring no hydraulic power. Safety sensor will not allow top car to be lowered when a car is underneath. Mechanical override on power pack allows top car to be lowered in event of electrical failure.

Extra Charge Options:
Include custom built machines to comply with lower ceiling height. Shorter platforms to accommodate sub-compact and imported cars only. Center to center (width) machines available to suit special conditions.

Domestic and International Approvals:
Available upon request.

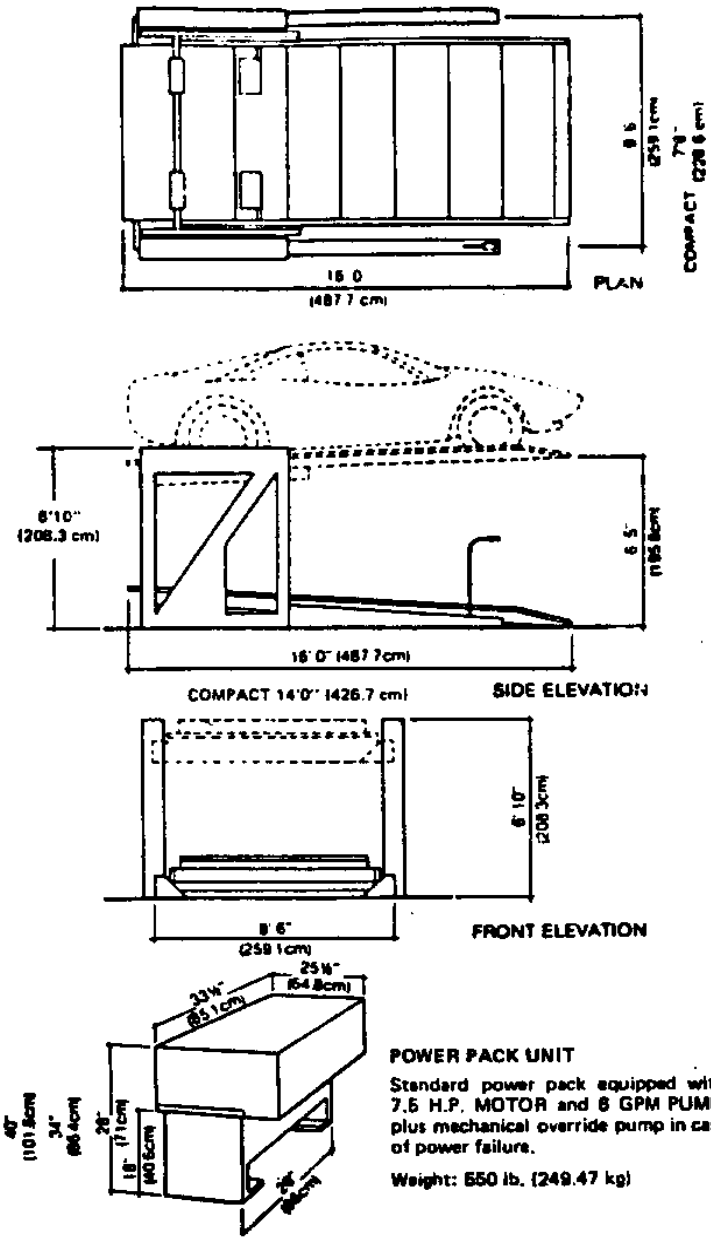

FIGURE 12-1
Typical Mechanized Parking Lift

12.2.2 Illumination

The garage lift platform and loading areas should be illuminated at all times when it is in operation. An intensity of not less than one foot-candle should be maintained at all points.

12.2.3 Power Unit

12.2.3.1 Main Line Switch. The inspector should closely examine the condition of the main line switch before inspecting any moving part because opening the switch may not have removed all power from a particular lift. This condition is very prevalent when lifts share the same pump unit.

12.2.3.2 Pumps. Pumps can be of the direct-connected type or driven by multiple V-belts.

12.2.3.3 Assembly. A standard garage lift power unit consists of a hydraulic oil reservoir, a pump unit, an electric motor for driving the pump, and a manual lowering valve in case of power failure. A typical power pack can support up to 40 lifts, (each unit operating individually, one at a time) although typical installations have no more than 6-8 lifts per unit.

12.2.3.4 Pumps. Pumps should be checked for leakage around the shaft, and for unusual noise which could be caused by cavitation due to a partially plugged suction line or strainer.

12.2.3.5 Drives (if applicable). Belt drives should be checked for wear, initial tension, and reasonable equality of tension among members of a set. Chain drives should be checked for wear, both on the chain and sprockets. Direct-drive couplings, where accessible, should be checked for excessive play.

12.2.3.6 Relief and Check Valves. Determine whether relief and check valves are provided and properly located. Examine relief valves, where provided, and note their condition and whether there is leakage. Relief valves should have a lead block and wire type seal on the means of adjustment and should be intact. Determine whether the check valve operates to stop and hold the lift when the pump stops.

12.2.3.7 Flexible Hydraulic Hose and Fitting Assemblies.

Examine under working pressure, flexible hydraulic hose and fitting assemblies and flexible couplings installed between the check valve or control valve and the cylinder.

Evidence of leakage, slippage of hose fittings, and damage to outer hose covering sufficient to expose reinforcement or distortion or bulging of hose body are cause for replacement of the hose and fitting assembly or the sealing element of a flexible coupling. Check hose and fitting assemblies for proper identification and replacement date.

12.2.3.8 Storage and Discharge Tanks. Examine the discharge tank for corrosion and leaks. Note whether the tank is covered to prevent entrance of foreign material and is suitably vented to the atmosphere. For electro-hydraulic parking lifts, determine whether there is sufficient liquid remaining in the tank when the lift is at the highest point of its travel to cover the intake and to prevent cavitation. Means should be provided for indicating the permissible minimum liquid level for equipment.

12.2.3.9 Operating Valves and Fixtures. Ensure that all operating valves and fixtures are operating in their intended manner and that all fastenings are in place and secure.

12.2.3.10 Equipment Location. Pump and control equipment access should be unobstructed by building construction or debris. Access space should be clean and free. Minimum 18" clearance on three sides of unit.

12.2.4 Controls

The following inspection procedure applies to all the control mechanisms, including starting panels for the power unit drive motor. A good preventive maintenance program on the control equipment will greatly reduce shutdowns.

12.2.4.1 Inspection Made with Power Off. Open the mainline switch and examine all relays, switches, contactors, control circuit rectifiers, transformers, capacitors, etc. Check for excessively worn or burned contacts, broken connectors, broken or cracked resistance grids or resistance tubes. Any fuses which are shorted with wire, solder or metal strips must be replaced. Check whether contacts of reverse-phase relay, where provided, are open. Examine to see that it is clean. Any accumulation of combustible materials especially on resistance grids or wires, or on control circuit rectifiers, is a common cause of fire. Also look for excessively worn pin hinges on relays or contactors.

12.2.4.2 Inspections Made with Power On. Close the mainline switch and proceed to observe the operation of the control equipment when the power unit is running. Note any arcing of contacts, excessive heating of coils or resistances, and misalignment of relays, contactors, and switches.

Parking lift speed should also be checked and compared with previous test data and criteria. This will determine if the system is operating at its full potential or if adjustments are needed to obtain a system operating at design capabilities. Unusual noises should also be noted.

12.2.5 Machinery Area

12.2.5.1 Illumination. Check the machinery area for adequate lighting.

12.2.5.2 Housekeeping. Check the machinery area for housekeeping and the presence of any flammable liquids (flash point less than 110 degrees F) or materials not necessary for the operation and maintenance of the parking lift.

12.2.5.3 Ventilation. Check the machinery area to see that adequate ventilation by natural or mechanical means has been provided to ensure safe and normal operation of the parking lift. Check local codes to see that machine ventilation is in compliance.

12.2.5.4 Fire Extinguisher. Check the machinery area for fire extinguisher, proper class, mounting, and maintenance record tag. They should be properly mounted and maintained.

12.2.6 Machinery Area Access

Check that a permanent, safe, and convenient means of access to machinery spaces has been provided and maintained. Check stairways and ladders to see that they are stable and secure. Also check to see that the access is not infringed on by building changes. Public safety may be directly dependent on rescue personnel getting to the lift equipment in a hurry. Access door should be self-closing, self-locking and maintained in the closed position. In addition, Navy policy is that the machinery spaces are controlled access areas to be secured by lock and key or combination locks.

12.2.7 Lift Platform

12.2.7.1 General Safety Precautions. If there is an adjacent lift or lifts, be careful to remain within the limits of the operating space of the lift being inspected. Be alert to actions and activities of personnel operating lifts that may be located adjacent to the lift you are inspecting.

12.2.7.2 Platform Structure. Determine that the lift yokes, drive-in saddles, and rail structures are structurally sound and are securely fastened. Distorted or straightened members, blistered paint, exuded rust from between members or around bolts or rivets, and oil bubbles on members may all be clues to a cracked or fractured member.

Where examination reveals the possibility of a fracture, a complete check should be made. Report any evidence of alterations or additions to the platforms or yokes that have materially changed the structural integrity.

12.2.7.3 Mechanical Locks. The parking lift platform should be held in the raised position by mechanical locking devices requiring no hydraulic power to hold the unit in place. Verify that the mechanical locking devices are in place and are operating properly. Do not permit parking lifts to be operated unless the mechanical locks are operative.

12.2.8 Covers And Guards

The inspector should check to see that all covers and guards are in place. They are provided to prevent accidental contact with moving devices or exposed electrical components. This protection is not being provided if the cover or guard is not properly mounted in place. Curb angles and throw over plates should be in place (as applicable), be undamaged and fully operational.

12.2.9 Housekeeping

The lift and surrounding area should be kept clean. Build-up of lint, dirt lubricants and trash in pits (if applicable) on yokes, brackets and rails presents a serious fire hazard.

12.2.10 Cylinders

Below ground cylinders or buried piping to direct-plunger lifts cannot be visually inspected. The cylinder head and its fastenings should be examined for defects or corrosion. The packing should be examined for excessive leakage. Determine that means are provided to collect any leakage. If provision is made to return leakage to the reservoir, the operation of this device should be checked. If cylinders are the movable type, rollers and guide rails should be checked for ease of movement and excessive wear.

12.2.11 Plungers

Examine the plunger for any pitting, scoring, excessive wear, or corrosion of metal. Determine if there is any evidence of excessive play of the plunger in the cylinder indicating excessive wear of the plunger guides.

12.2.12 Plunger Fastenings

Examine the fastenings of the plunger to the lift platform or yoke structure.

12.2.13 Oil Lines

The oil supply line between the cylinder and the control valve should be checked for freedom from corrosion, leaks, excessive vibration, and adequate support.

12.2.14 Drifting of Lift Platform

Drifting of a hydraulic lift may be an indication of a potentially hazardous situation and should be carefully investigated to determine the cause of the drifting. This information is necessary so that a decision can be made as to whether it is safe to allow the lift to continue in.service. Cylinders which cannot be inspected visually should be tested in the following manner with no load on the lift. Locate and mark the location of the lift for any convenient position. Open the disconnect switch for 15 minutes. Note the position of the car platform with respect to the reference mark. A change in lift position that cannot be accounted for by visible oil leakage or temperature change of the oil indicates a leak of the cylinder or in the underground piping and a need for further inspection, tests, or repairs.

12.3 PERIODIC INSPECTION AND TESTS

12.3.1 Scope

This section describes various operational tests that are recommended to be performed on an annual basis. In addition, there are other tests and inspections that should be performed every three years. It should be specifically documented on the inspectors report that these tests have been performed and the dates the tests were made.

12.3.2 Flexible Hydraulic Hose And Fitting Assemblies And Flexible Couplings

Examine flexible hose and fittings assemblies, and flexible couplings as previous described. Flexible hydraulic hose and fitting assemblies should be subjected to a test at three times the working pressure. After six years, they must be replaced; the replacement date should be marked on the hose.

12.3.3 Pressure Tanks

Pressure tanks of hydraulic lifts should be thoroughly cleaned and inspected internally and subjected to a hydrostatic test. The tank should be subjected to a hydrostatic pressure by gradually raising the pressure until it reaches a value of 50% in excess of working pressure, but not greater. The test pressure should be applied for at least one minute and all parts of the-tank including seams, rivets, and fittings should be observed while under pressure. Any leaks or evidence of impending failure should be noted. Pressure tank inspections made by licensed boiler inspectors are not required.to be witnessed by the elevator inspector. He should only determine whether the required inspection has been made and that a certificate has been issued by the boiler inspector.

12.3.4 Relief And Check Value Settings

Pressurize system, verify that relief and check valve settings are operating at specified pressures; adjust as appropriate and install new lead seals.

CHAPTER 13

POWER PLATFORMS

13.1 INTRODUCTION

NOTE: Paragraphs identified with a vertical line in the left margin are inspections that should be made by certified Vertical Transportation Equipment Inspectors only.

13.1.1 Scope

The inspection of power platforms included in this chapter is not only an inspection of all safety related functions, but is also an inspection to determine the condition of the equipment and identify areas that need improvement. Proper maintenance is needed to keep the power platforms operating. When preventive maintenance is lacking, shutdowns will occur. In this chapter we will identify specific published safety standards that relate directly to the inspection procedure being followed in this text. It is intended that each noted standard should be reviewed as it is identified. Safety as well as performance considerations of the inspection will be addressed in the following text. Powered scaffolds consist of three parts: a work platform or stand usually suspended from one, two or four hoist ropes; a motive means which can be hand, air or electric powered; and a suspension means which can be outriggers, cornice hooks, davits or roof cars. Because of the limited use associated with the roof car system, this chapter will address only the more widely used powered scaffold type. See Figures 13-1 thru 13-5 showing various power platform arrangements with component names that will be used in this chapter.

13.1.2 Purpose

The purpose of this inspection is to review the entire power platform installation to ascertain that the equipment is being properly maintained and is in a safe operating status. Because the operation and use of power platforms are by nature very dangerous, the inspection should be directed towards those areas such as safety ropes, limit switches, guards, standing and boarding surfaces and fastenings that directly relate to the safe operation by the user personnel.

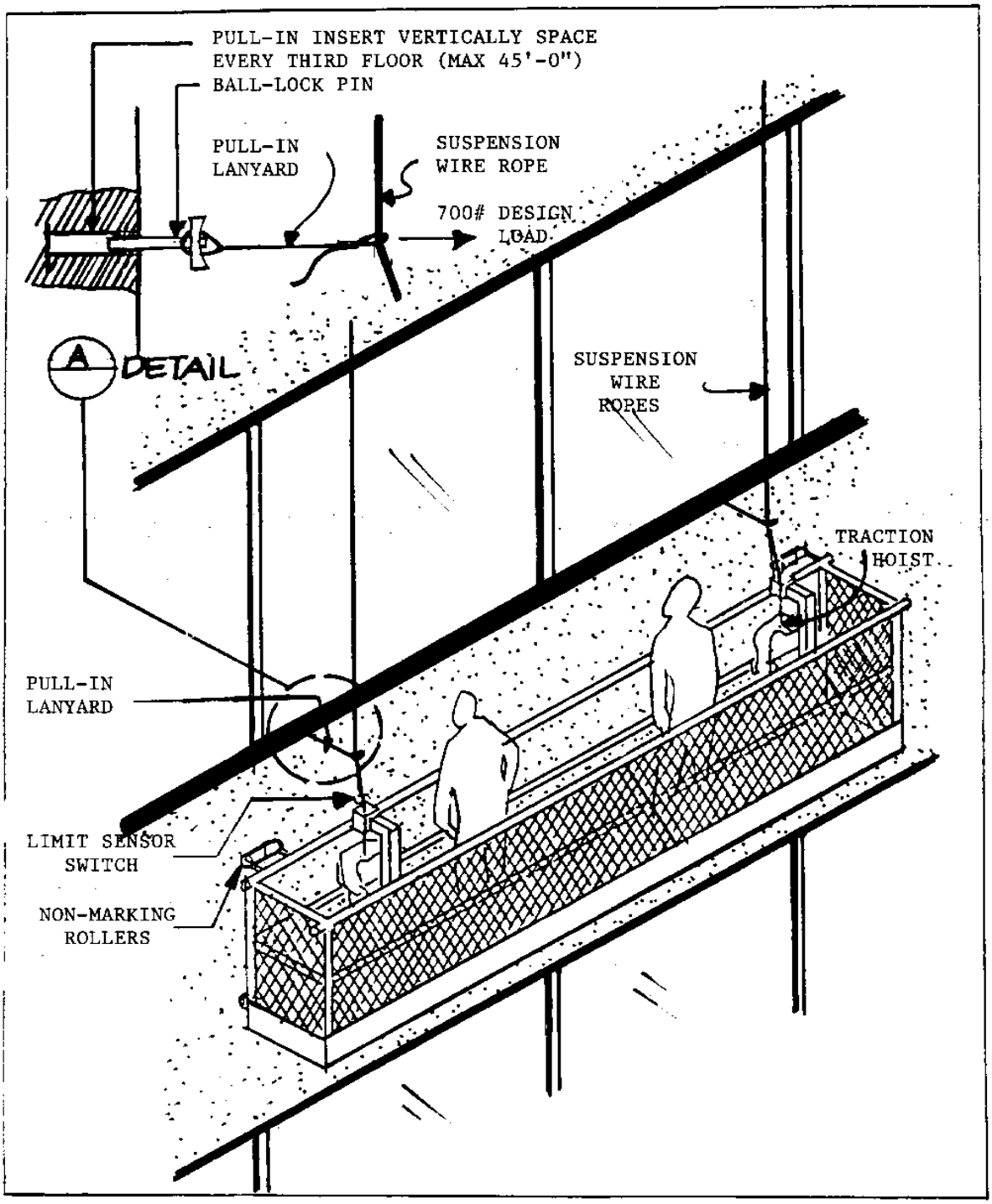

FIGURE 13-1
Self-Powered Platform With Intermittent Tie-In System

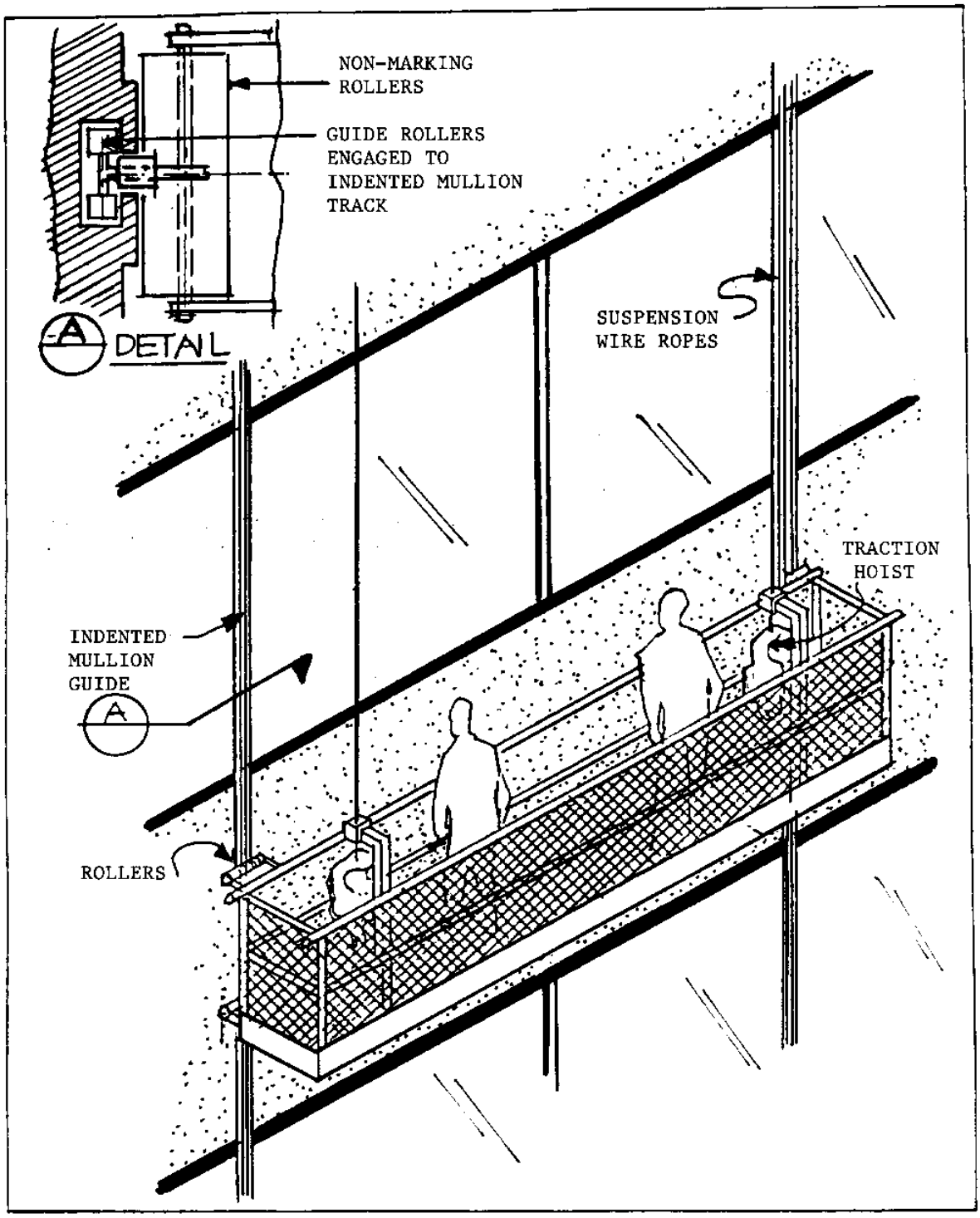

FIGURE 13-2
Self-Powered Platform With Indented Mullion Guide

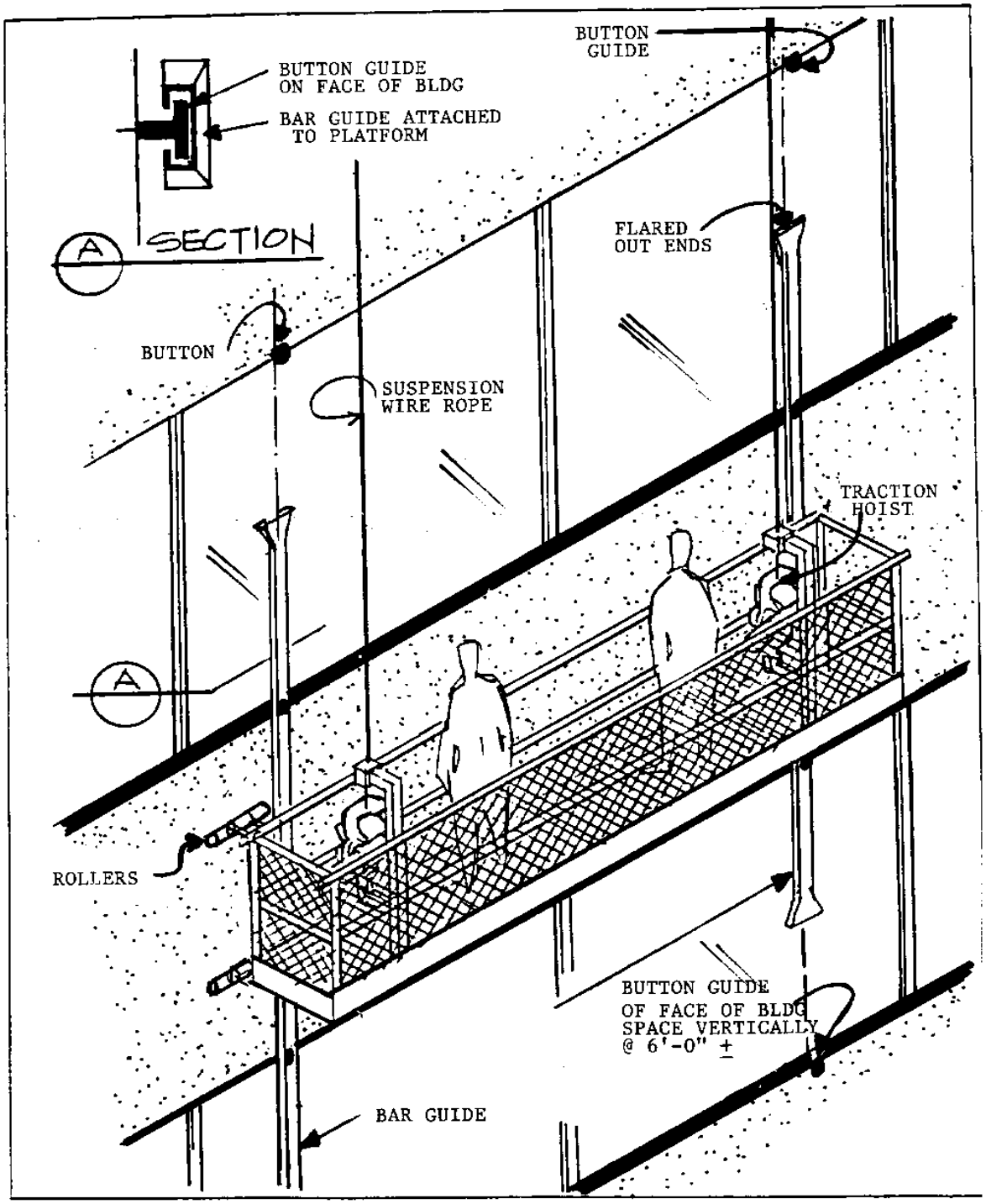

FIGURE 13-3
Self-Powered Platform With Button Guide System

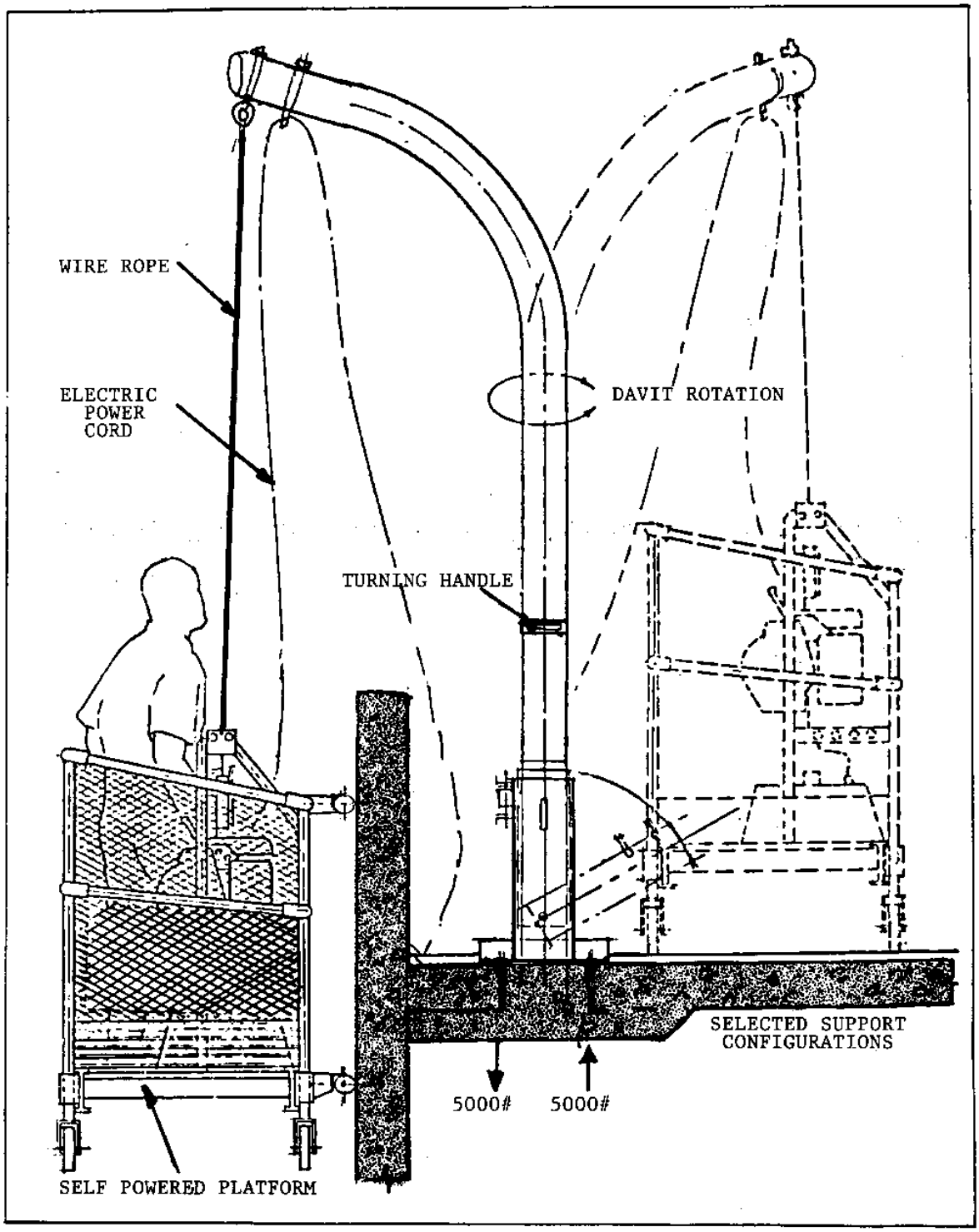

FIGURE 13-4
Typical Self-Powered Platform Overhead Suspension

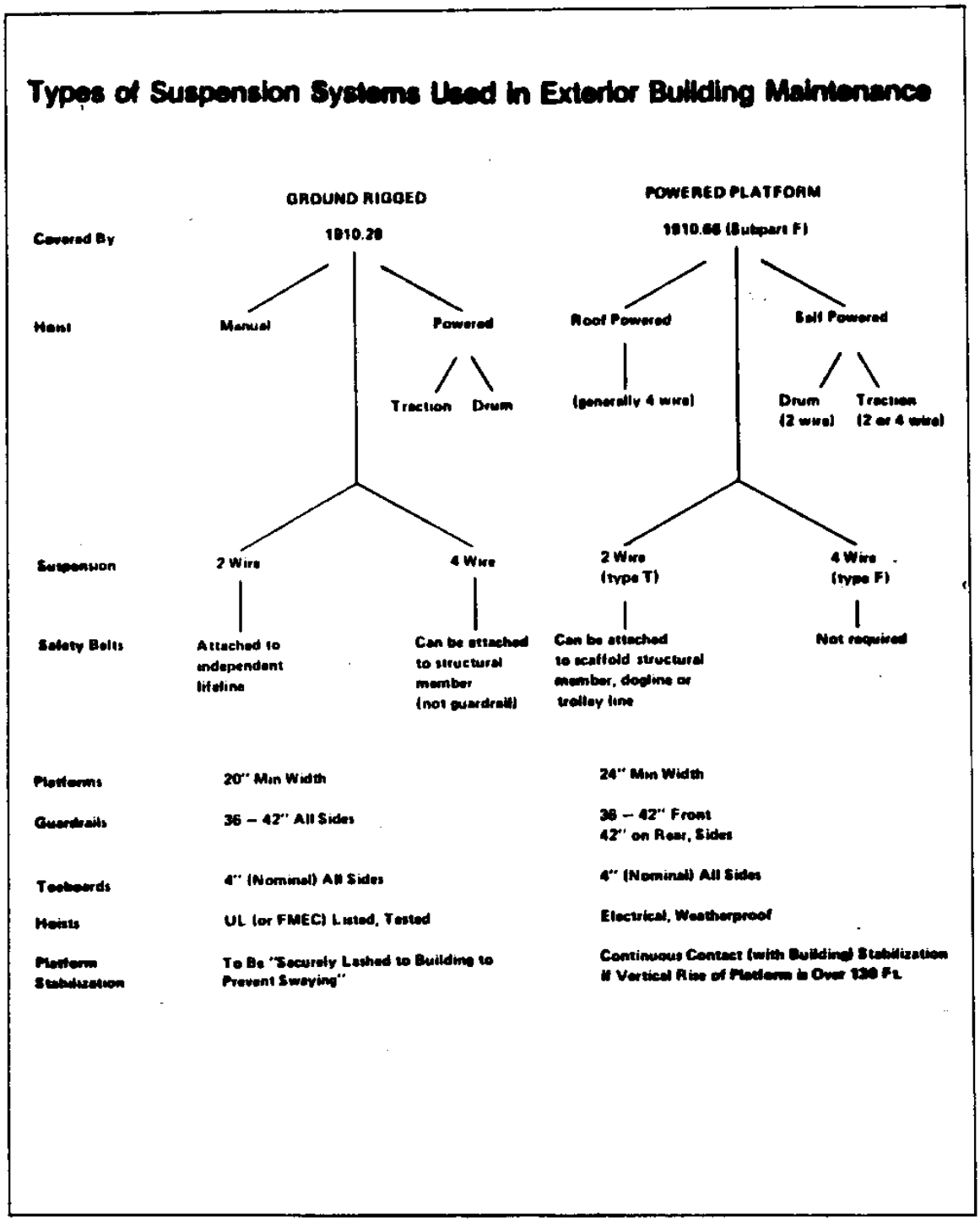

FIGURE 13-5
Power Scaffold Suspension System

13.1.3 Use

Power platforms are used to transport working personnel up and down the vertical surface of a structure and provide a work place for personnel to perform various tasks. This includes such functions as window washing, building repairs and maintenance, etc. They are provided for the exclusive use of certain designated operating or maintenance personnel. No persons other than such employees are permitted to ride on the units.

13.1.4 Applicable Safety Standards

The applicable safety standards for the construction, maintenance, inspection and operation of scaffolds is contained in ANSI A120-1970 Safety Requirements for Powered Platforms for Exterior Building Maintenance. The Federal OSHA Standard 1910.28 governs ground rigged power scaffolds, while 1910.66 covers permanent installed power scaffolds and power platforms. Many state and municipal code inspection authorities also publish safety standards for power scaffolds.

13.1.5 Inspection Interval

It is recommended that periodic inspection of the following items be conducted before each days use or in no case less than 12 month intervals:

a. Suspension Means

b. Hoist Ropes

c. Rope Shackles

d. Electrical Power Cords

e. Safety Lines and Suspension Points

f. Safety belts

g. Platform Integrity

h. Electrical Switches, Disconnects, Controllers and Control Stations.

i. Platform Guides and Components

j. Hoists

k. Wire Rope Accumulators (if furnished)

l. Handrails, Toeguards and Safety Devices

m. Limit and Tension Switches

n. Lubrication

o. Hoist Motor & Coupling

p. Primary and Secondary Brakes

q. Controlled Descent Device

r. Stop Switches

s. Equipment Vibration and Misalignment

Limit and tension switches should be checked before each scaffold drop.

13.1.6 Special Safety Precautions

Inspectors are cautioned that there are many potential hazards involved in the inspection of powered scaffolds. Since any accident can not only be disabling, but may be fatal, inspectors are reminded of the hazards associated with the operation and movement of this equipment. A history of accidents indicates a number of incidents involving inspectors while riding on powered scaffold equipment.

The inspector should be suitably clothed before starting the inspection. Avoid wearing loose clothing, particularly neckties, as these may become caught in the moving scaffold parts or ropes during the inspection. Keep buttons, particularly those on cuffs, buttoned. The inspector should have a proper safety belt and safety lines attached to permanent suspension points when riding on the scaffold. The power supply line disconnect switch should be opened or the supply cord unplugged when it is desired to prevent power scaffold movement or when inspecting electrical parts. Before starting the powered scaffold, the Inspector should first determine that the on-off operating device, emergency stop switch, limit switches, tensioning switches, and any other safety devices or switches are in proper working order and in the proper position for inspection. Ascertain that OSHA approved safety belts, dog lines and safety lines are available, and check them for wear, proper fit, and operation. Do not enter the platform without wearing a proper safety belt.

13.2 INSPECTION PROCEDURES

13.2.1 Application

Ascertain that the powered scaffold is being utilized to transport only the specified loads for which it was designed. The people and equipment loads moved should not exceed the powered scaffolds rated capacity nor its rated speed.

13.2.2 Maintenance And Repair

Determine whether the powered scaffold unit is being properly maintained by qualified personnel and that the maintenance and call back logs are provided, properly filled out, and are up-to-date. A good indicator of proper maintenance is clean, properly lubricated equipment.

13.2.3 Inspections Performed On The Roof Or On The Ground For Ground Rigged Powered Scaffolds

Before boarding or operating a powered scaffold, inspect the support means such as outriggers, cornice hooks or davits to ascertain that the supports are sound, that the rope suspension hooks, eyelets, or shackles are the proper type and that the hoist ropes are in good shape. Hoist ropes should have a tag and be periodically reshackled or replaced per ANSI A120.1 Rule 32.4 and 32.6. Inspect the power cord, safety lines and safety belts or harnesses to determine that they are available and are in proper operating condition. Board the powered scaffold platform to determine that the hoist yokes are attached and secured, that the handrails, toeboards, and platform members meet OSHA regulations and that the scaffold guide shoes are in place. Check the hoist overspeed brace, secondary brace and controlled descent devices (if furnished).

13.2.4 Inspections Performed On The Powered Scaffold

Raise the scaffold and swing it out over the roof through the davits (if furnished), check the top limit switches, the bottom limit switches, the mullion guide obstruction devices and the platform anti-tilt devices (if furnished). Check the pendant controls for up and down movement and the stop switches to make certain they interrupt power to the hoists. Check the hoist rope tension device and the slack rope device.

13.2.5 Controls (For Roof Car Type Devices)

The following inspection procedure applies to all the control mechanisms, including starting panels for the roof car drive motor. A good preventive maintenance program on the control equipment will greatly reduce shutdowns.

13.2.5.1 Inspection Made with Power Off. Open the mainline switch and examine all relays, switches, contactors, control circuit rectifiers, transformers capacitors, etc. Check for excessively worn or burned contacts, broken connectors, broken or cracked resistance grids or resistance tubes. Any fuses that are shorted with wire, solder or metal strips must be replaced. Check whether contacts of reverse-phase relay, where provided, are open. Examine to see that it is clean. Any accumulation of combustible materials, especially on resistance grids or wires or on control circuit rectifiers, is a common cause of fire. Also, look for excessively worn pin hinges on relays or contactors.

13.2.5.2 Inspections Made with Power On. Close the mainline switch and proceed to observe the operation of the control equipment when the roof car and power scaffold are running. Note any arcing of contacts, excessive heating of coils or resistances, and misalignment of relays, contactors, and switches. Roof car and power scaffold speed must also be checked and compared with previous test data and criteria. The speed is checked with a hand held tachometer with its drive wheel directly engaging the roof track or parapet (roof car) and the building face (powered scaffold). Unusual noises should also be noted.

CHAPTER 14

LEVELLATORS

14.1 INTRODUCTION

NOTE: Paragraphs identified with a vertical line in the left margin are inspections that should be made by certified Vertical Transportation Equipment Inspectors only.

14.1.1 Scope

This section describes the procedures involved in inspecting levellators on dock boards. These specialized units are lifting platforms that are utilized on loading docks, manufacturing plants, hospitals, etc. where is it desired to move heavy materials or vehicles from one level to another. The platform motive means can be either pressured hydraulic fluid from a pump unit or by compressed air operating on scissors lift plungers, direct plungers or offset plungers.

14.1.2 Purpose

The purpose of this inspection is to review the entire levellator installation to ascertain that the equipment is being properly maintained and is in a safe operating status. Because the operation and use of levellators are by their nature very dangerous, the inspection should be directed towards those areas such as hydraulic lines, scissors, rams, switches, operating levers and guards, loading and boarding surfaces and the safety features that directly relate to the safe operation by the user personnel. Figure 14-1 shows a typical levellator with component names that will be used in this manual.

14.1.3 Use

Levellators are generally used to transport materials in manufacturing plants, paper pulp plants, warehouses, filtration plants, power plants, chemical plants, and loading docks. (See Figure 14-2). They are provided for the exclusive use of certain designated operating or maintenance personnel when vertical transportation of such material loads is required for a distance of up to two floors. No persons other than such freight handling employees are permitted to work on the units and these employees should not ride on a levellator while it is vertically transitioning.

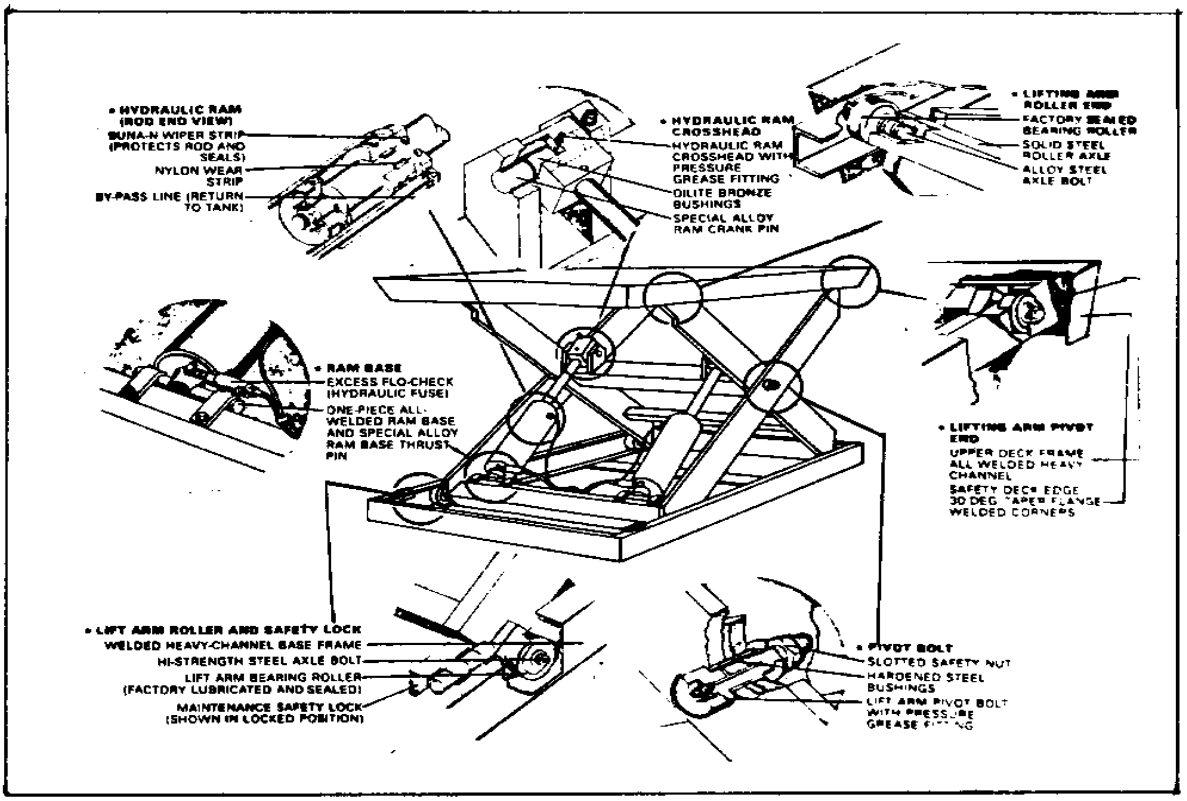

FIGURE 14-1
Typical Levellator Arrangement

14.1.4 Safety Standards

The applicable safety standards for the construction of levellator skirts, guards and handrails are contained in section 1910.44 of the Federal OSHA Standards. Many state and municipal code inspection authorities also publish safety standards for levellators.

14.2 INSPECTION PROCEDURES

14.2.1 Landings

Adequate lighting of not less than three foot-candles should be provided at each floor landing at all times when the levellator is in operation. Check with a calibrated light meter. The floor space adjacent to floor openings should be free from obstructions and kept clear at all times. The landing surfaces at the entrances and exits to levellators should be so constructed and maintained as to provide a safe footing at all times.

DIVERSIFIED INDUSTRIAL PLANT APPLICATION

Load from plant floor level—Lift platform rises from floor level to truck bed height. Buildings can be constructed at grade level.

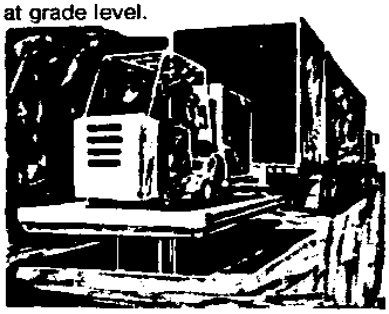

Bridge building gaps—Plant traffic can go across spur tracks or other breaks between buildings. Tracks are recessed into the Levelator Lift platform and mesh with main rails when lift is lowered.

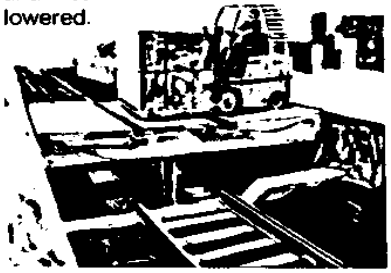

Lower truck bed to ground level—Truck parks over Levelator Lift which is lowered to bring bed level with ground. Hand trucks and fork lifts can move in and out of bed for loading and unloading.

Automated materials handling—Levelator Lift can be incorporated into conveyor system to lift or lower materials from one level to another, with movement actuated by automatic controls.

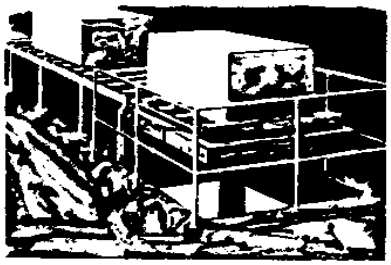

Movement from one plant level to another—Any load that can be rolled across a level floor can be taken from one floor level to another on a Levelator Lift. Ramps or inclines eliminated, no floor space lost.

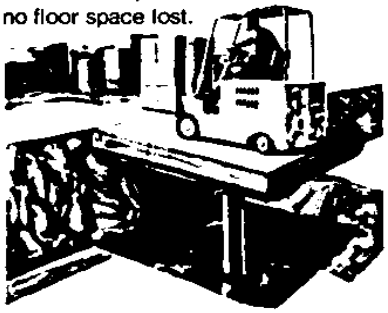

Charging presses—Automatic controls cause lift to stop at predetermined levels to load plywood press and receive the finished material.

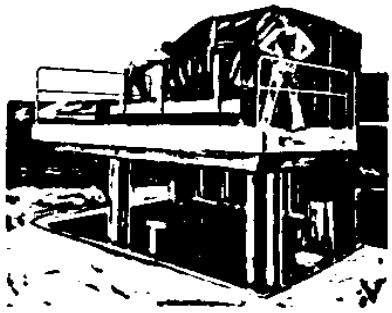

FIGURE 14-2a
Typical Application of Levellators

Machine feeding—Heavy stock can be raised to convenient working height for fast, continuous machine feeding. Manual, automatic or semi-automatic increment stopping devices can be used.

Paper roll handling—Levelator Lifts find many uses in paper mills where heavy rolls must be moved from one level to another. Automation is achieved and use of overhead hoists and slings eliminated.

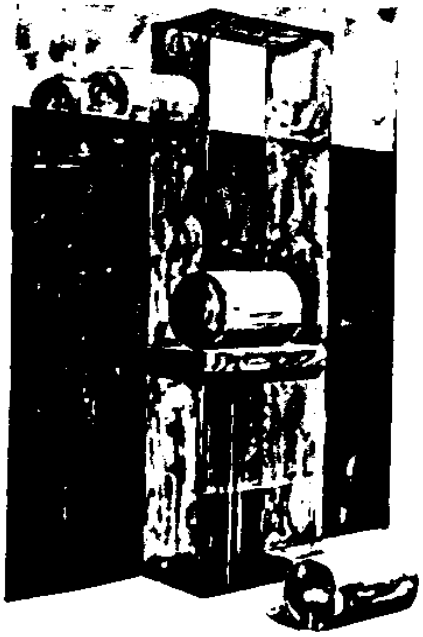

FIGURE 14-2b
Typical Applications Of Levellators

14.2.2 Landing Guards And Skirts

On the ascending sides of a levellator, the scissors or jaws should be guarded by permanent solid walls, wire mesh partitions or solid steel panels. Sectional telescoping type metal safety skirting is to be installed to completely cover any exposed portions of the lift equipment and to act as toe guards for a descending levellator platform.

14.2.3 Illumination

The levellator platform and loading areas should be illuminated at all times when it is in operation. An intensity of not less than one foot-candle should be maintained at all points.

14.2.4 Power Unit

14.2.4.1 Main Line Switch. The inspector should closely examine the condition of the main line switch before inspecting any moving part because opening the switch may not have removed all power from a particular levellator. This condition is very prevalent when levellators share the same pump unit.

14.2.4.2 Pumps. Pumps can be of the direct-connected type or driven by multiple V-belts.

14.2.4.3 Assembly. A standard levellator power unit consists of a hydraulic oil reservoir, a pump unit, an electric motor for driving the pump, and a manual lowering valve in case of power failure. (See Figure 14-3).

14.2.4.4 Pumps. Pumps should be checked for leakage around the shaft, and for unusual noise that could be caused by cavitation due to a partially plugged suction line or strainer.

14.2.4.5 Drives (if applicable). Belt drives should be checked for wear, initial tension, and reasonable equality of tension among members of a set. Chain drives should be checked for wear, both on the chain and sprockets. Direct-drive couplings, where accessible, should be checked for excessive play.

14.2.4.6 Relief and Check Valves. Determine whether relief and check valves are provided and properly located. Examine relief valves, where provided, and note their condition and whether there is leakage. Relief valves should have a lead block and wire type seal on the means of adjustment and be intact. Determine whether the check valve operates to stop and hold the lift when the pump stops.

14.2.4.7 Flexible Hydraulic Hose and Fitting Assemblies. Examine under working pressure flexible hydraulic hose and fitting assemblies and flexible couplings installed between the check valve or control valve and the cylinder. Evidence of leakage, slippage of hose fittings, and damage to outer hose coverings sufficient to expose reinforcement or distortion or bulging of hose body are cause for replacement of the hose and fitting assembly or the sealing element of a flexible coupling. Check hose and fitting assemblies for proper identification and replacement date.

14.2.4.8 Storage and Discharge Tanks. Examine the discharge tank for corrosion and leaks. Note whether the tank is covered to prevent entrance of foreign material and is suitably vented to the atmosphere. For an electro-hydraulic levellator, determine whether there is sufficient liquid remaining in the tank when the lift is at the highest point of its travel to cover the intake and to prevent cavitation. Means should be provided for indicating the permissible minimum liquid level for equipment.

14.2.4.9 Operating Valves and Fixtures. Check that all operating valves and fixtures are operating in their intended manner and that all fastenings are in place and secure.

14.2.4.10 Equipment Location. Pump and control equipment access should be unobstructed by building construction or debris. Access space should be clean and free. Minimum 18" clearance on three sides of unit.

14.2.5 Controls

The following inspection procedure applies to all the control mechanisms, including starting panels for the power unit drive motor. A good preventive maintenance program on the control equipment will greatly reduce shutdowns.

14.2.5.1 Inspection Made with Power Off. Open the mainline switch and examine all relays, switches, contactors, control circuit rectifiers, transformers, capacitors, etc. Check for excessively worn or burned contacts, broken connectors, broken or cracked resistance grids or resistance tubes. Any fuses that are shorted with wire, solder or metal strips must be replaced. Check whether contacts of reverse-phase relay, where provided, are open. Examine to see that it is clean. Any accumulation of combustible materials, especially on resistance grids or wires or on control circuit rectifiers is a common cause of fire. Also, look for excessively worn pin hinges on relays or contactors.

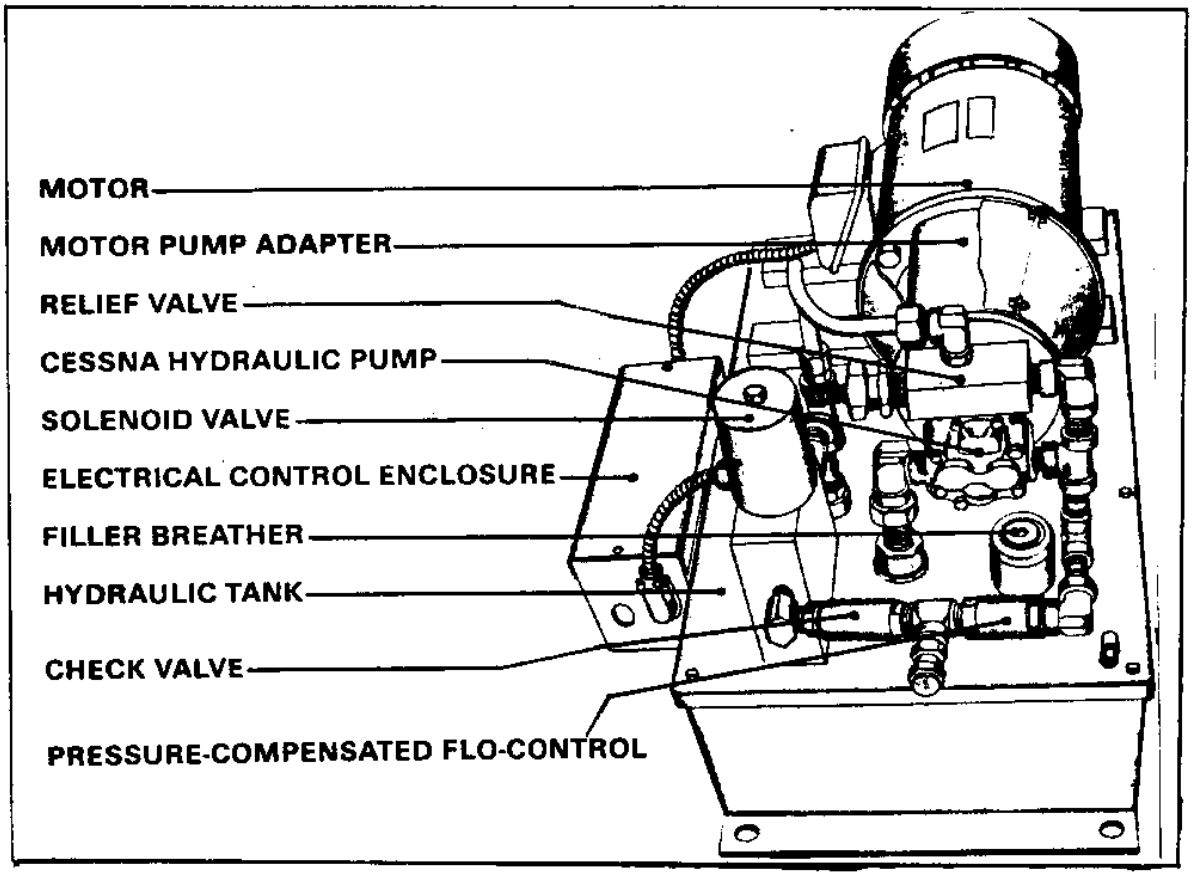

FIGURE 14-3
Typical Pump Unit Assembly

14.2.5.2 Inspections Made with Power On. Close the mainline switch and proceed to observe the operation of the control equipment when the power unit is running. Note any arcing of contacts excessive heating of coils or resistances, and misalignment of relays, contactors, and switches. Levellator speed must also be checked and compared with previous test data and criteria. This will determine if the system is operating at its full potential or if adjustments are needed to obtain a system operating at design capabilities. Unusual noises should also be noted.

14.2.6 Machinery Area

14.2-6.1 Illumination. Check the machinery area for adequate lighting.

14.2.6.2 Housekeeping. Check the machinery area for housekeeping and the presence of any flammable liquids (flash point less than 110 degrees F) or materials not necessary for the operation and maintenance of the levellator.

14.2.6.3 Ventilation. Check the machinery area to see that adequate ventilation by natural or mechanical means has been provided to ensure safe and normal operation of the levellator. Check local codes to see that machine ventilation is in compliance.

14.2.6.4 Fire Extinguisher. Check the machinery area for fire extinguisher, proper class, mounting, and maintenance record tag. They should be properly mounted and maintained.

14.2.7 Machinery Area Access

Check that a permanent, safe, and convenient means of access to machinery spaces has been provided and maintained. Check stairways and ladders to see that they are stable and secure. Also check to see that the access is not infringed on by building changes. Public safety may be directly dependent on rescue personnel getting to the manlift levellator equipment in a hurry. Access door should be self-closing, self-locking and maintained in the closed position. In addition, Navy policy is that the machinery spaces are considered to be controlled access areas to be secured by lock and key or combination locks.

14.2.8 Lift Platform

14.2.8.1 General Safety Precautions. If there is an adjacent lift or lifts, be careful to remain within the limits of the operating space of the lift being inspected. Be alert to actions and activities of personnel operating lifts that may be located adjacent to the lift you are inspecting.

14.2.8.2 Platform Structure. Determine that the lift yokes, drive-in saddles, and rail structures are structurally sound and are securely fastened. Distorted or straightened members, blistered paint, exuded rust from between members or around bolts or rivets, and oil bubbles on members may all be clues to a cracked or fractured member. Where examination reveals the possibility of a fracture, a complete check should be made. Report any evidence of alterations or additions to the platforms or yokes that have materially changed the structural integrity.

14.2.9 Covers And Guards

The inspector should check to see that all covers and guards are in place. They are provided to prevent accidental contact with moving devices or exposed electrical components. This protection is not being provided if the cover or guard is not properly mounted in place. Curb angles and throw over plates should be in place (as applicable), be undamaged and fully operational.

14.2.10 Housekeeping

The lift and surrounding area should be kept clean. Build-up of lint, dirt lubricants and trash in pits (if applicable) on yokes, brackets and rails presents a serious fire hazard.

14.2.11 Cylinders

Below ground cylinders or buried piping to direct-plunger lifts cannot be visually inspected. The cylinder head and its fastenings should be examined for defects or corrosion. The packing should be examined for excessive leakage. Determine that means are provided to collect any leakage. If provision is made to return leakage to the reservoir, the operation of this device should be checked. If cylinders are the movable type, rollers and guide rails should be checked for ease of movement and excessive wear.

14.2.12 Plungers

Examine the plunger for any pitting, scoring, excessive wear, or corrosion of metal. Determine if there is any evidence of excessive play of the plunger in the cylinder indicating excessive wear of the plunger guides.

14.2.13 Plunger Fastenings

Examine the fastenings of the plunger to the lift platform or yoke structure.

14.2.14 Oil Lines

The oil supply line between the cylinder and the control valve should be checked for freedom from corrosion, leaks, excessive vibration, and adequate support.

14.2.15 Drifting Of Lift Platform

Drifting of a hydraulic lift may be an indication of a potentially hazardous situation and should be carefully investigated to determine the cause of the drifting. This information is necessary so that a decision can be made as to whether it is safe to allow the lift to continue in service. Cylinders that cannot be inspected visually should be tested in the following manner with no load on the lift. Locate and mark the location of the lift to a convenient position. open the disconnect switch for 15 minutes. Note the position of the car platform with respect to the reference mark. A change in lift position that cannot be accounted for by visible oil leakage or temperature change of the oil indicates a leak of the cylinder or in the underground piping and a need for further inspection, tests, or repairs.

14.3 PERIODIC INSPECTION AND TESTS

14.3.1 Scope

This section describes various operational tests that are recommended to be performed on an annual basis. In addition, there are other tests and inspections that should be performed every three years. It should be specifically documented on the inspectors report that these tests have been performed and the dates the tests were made.

14.3.2 Flexible Hydraulic Hose And Fitting Assemblies And Flexible Couplings

Examine flexible hose and fittings assemblies, and flexible couplings as previously described. Flexible hydraulic hose and fitting assemblies should be subjected to a test at three times the working pressure. After six years, they must be replaced; the replacement date should be marked on the hose.

14.3.3 Pressure Tanks

Pressure tanks of hydraulic lifts should be thoroughly cleaned and inspected internally and subjected to a hydrostatic test. The tank should be subjected to a hydrostatic pressure by gradually raising the pressure until it reaches a value of 50% in excess of working pressure, but not greater. The test pressure should be applied for at least one minute and all parts of the tank including seams, rivets, and fittings should be observed while under pressure. Any leaks or evidence of impending failure should be noted. Pressure tank inspections made by licensed boiler inspectors are not required to be witnessed by the elevator inspector. He/she should only determine whether the required inspection has been made and that a certificate has been issued by the boiler inspector.

14.3.4 Relief And Check Valve Settings

Pressurize system, verify that relief and check valve settings are operating at specified pressures; adjust as appropriate and install new lead seals.

CHAPTER 15

INDUSTRIAL CONVEYORS

15.1 INTRODUCTION

NOTE: Paragraphs identified with a vertical line in the left margin are inspections that should be made by certified Vertical Transportation Equipment Inspectors only.

15.1.1 Scope

The term INDUSTRIAL CONVEYOR is a generic title given to a device or series or devices used to move material from one place to another either by power or gravity. They can move material either horizontally or vertically or both. Conveyors are designed to suit an application. This chapter will provide generalized inspection procedures to follow. The inspector will have to formulate his own specific procedures for each individual device based on the specific design of the device, manufacturer's recommendations, actual application and the general considerations included in this chapter. The inspection of industrial conveyors is to be not only an inspection to determine the condition of the equipment, but also to identify areas that need improvement. Proper maintenance is needed to keep the conveyor operating. When preventive maintenance is lacking, shutdowns will occur. In this chapter we will identify specific published safety standards that relate directly to the inspection procedure being followed in this text. It is intended that each noted standard should be reviewed as it is identified. Safety, as well as performance considerations of the inspection, will be addressed in the following text.

15.1.2 Purpose

The purpose of this inspection is to review the entire conveyor installation to ascertain that the equipment is being properly maintained and is in a safe operating status. Because the operation and use of conveyors are by nature very dangerous, the inspection should be directed toward those areas such as safety devices, limit and tension switches, belt integrity and guards, loading, transfer, discharge points and surfaces and other component parts and safety guards that directly relate to the safe operation by the user personnel.

15.1.3 Use

Industrial conveyors are generally used to transport materials from one point to another either horizontally, on an incline and/or vertically. The conveyors covered in this manual consist of the bulk material, package or unit type.

They are to be operated exclusively by certain trained, designated operating, maintenance, or inspection personnel when transportation of materials is required. No persons other than such employees are permitted to utilize the conveyor units.

15.1.4 Applicable Safety Standards

The applicable safety standards for the construction, maintenance, inspection and operation of conveyors and related equipment is contained in the ANSI/ASME B20.1 Safety Standard for conveyors and related equipment. While the Federal OSHA Standards do not have a section specifically for conveyors, Section 1910.12(a) does address the guarding of machines and power transmission apparatus . Many state and municipal code inspection authorities also publish safety standards for conveyors. Because there have been many incidences of accidents to persons on or about conveyors, they should be inspected on a periodic basis.

15.1.5 Inspection Interval

It is recommended as a minimum, that periodic inspections of the following general conveyor items be conducted every thirty (30) days:

a. Belt and Belt Joints

b. Belt Pulleys and Clearances

c. Pulley Supports

d. Pulley Take-up or Conveyor Weights

e. Backstops and Brakes

f. Drive Mechanism and Couplings

g. Electrical Switches, Disconnects, Controllers, and Control Strap Ons

h. Floor Landings - Slippery Conditions

i. Guardrails, Guards and Safety Devices

j. Illumination

k. Limit and Tension Switches

l. Lubrication

m. Drive Motor and Coupling

n. Pulley Lagging

o. Pulley Supports

p. Rail, Track or Chain Supports and Fastenings

q. Rails, Tracks or Chains

r. Rollers and Sliders

s. Stop Switches, Pull Cords or Stop Controllers

t. Hoppers and Chutes

u. Nip and Shear Point Guards

v. Equipment and Vibration and Misalignment

w. Warning Signs, Signals, and Lights

Light and tension switches should be checked weekly.

15.2 INSPECTION PROCEDURES

15.2.1 Verification Of Application

Ascertain that the conveyor is being utilized to convey only the specified commodities or materials for which it was designed. The material loads moved should not exceed the conveyors' rated capacity nor its rated speed.

15.2.2 Condition Of Maintenance

Determine whether the conveyor unit is being properly maintained by qualified personnel and if the maintenance and call back logs are provided, are properly filled out and are up to date. A good indicator of proper maintenance is clean, properly lubricated equipment.

15.2.3 Controlled Access

When conveyor drive machines or vertical or inclined sections are located in buildings, such

as office buildings, to which the public has access, make certain the control drives are located in an enclosure protected by self-closing, spring-locked doors, at all floors or areas to which the public has access. Keys to such doors shall be limited to employees. In lieu of spring-locked doors which require a key, a magnetic-type lock is permitted if the actuating pushbutton is located not less than seven feet above the floor in an inconspicuous location.

15.2.4 Floor Openings

Floor openings for vertical or inclined conveyor sections should be properly guarded.

15.2.5 Illumination

Adequate lighting of not less than three floor-candles should be provided at each indoor floor landing or transfer points at all times when the conveyor is in operation. Check the lighting provided with a calibrated light meter. All runs of indoor conveyors, machinery spaces and walkways should be illuminated at all times when it is in operation. An intensity of not less than one foot-candle should be maintained at all points.

15.2.6 Entry Or Loading Area

The floor space adjacent to floor openings or transfer points should be free from obstruction and kept clear of extraneous materials at all times. The landing surfaces at the conveyor loading and discharge points should be so constructed and maintained as to provide safe footing at all times.

15.2.7 Floor Opening Guards

The floor opening at each vertical conveyor section should be guarded on all sides by a standard railing and toeboard or by approved panels or wire mesh. Such rails or guards should be at least 42 inches in height with a 4 inch high toeboard per the applicable OSHA Standards. Rails or guards should be located not more than one foot in board from the edge of the floor opening.

15.2.8 Drive Machines

15.2.8.1 Types. Conveyor drive machines can be of the direct-connected type, driven by multiple V-belts, or connected through various drive shafts, gear boxes, or reducers. Ascertain that all drive motor supports, electrical conduits, and equipment guards are in place and properly braced to ensure that hazards to operation personnel do not exist.

15.2.8.2 Backstops and all incline, decline or vertical conveyors where the effect of gravity will permit uncontrolled lowering of the load which may cause injury to personnel should be

equipped with a brake or backstop device. A mechanically-applied electrically released brake should be generated to the motor shaft for direct connected units or to the input shaft for belt-driven units. The brake should be capable of stopping and holding the inclined conveyor when the weighted side is loaded with materials. Observe the brake operation to make certain it applies when the conveyor is stopped, and electrically releases it when the unit is started.

15.2.9 Controls

The following inspection procedure applies to all the control mechanisms, including starting panels for the manlift drive motor. A good preventive maintenance program on the control equipment will greatly reduce shutdowns.

15.2.9.1 Inspection Made with Power Off. Remember that the conveyor you are inspecting may be for a series of devices controlled by more than one mainline switch. Caution must be used to know which, if any, devices are still active when making this area of the inspection. Open the mainline switch and examine all relays, switches, contactors, control circuit rectifiers, transformers, capacitors, reactors, etc. Check for any excessively worn or burned contact broken connectors, broken or cracked resistance grids or resistance tubes. Any fuses that are shorted with wire, solder or metal strips must be replaced. Examine to see that the equipment is clean. Any accumulation of combustible materials, especially on resistance grids or wires or on control circuit rectifiers, is a common cause of fire. Check whether contacts of reverse-phase relay, where provided, are open. Also be sure to check for excessively worn pin hinges on relays or contactors.

15.2.9.2 Inspections Made with Power On. Close the mainline switch and proceed to observe the operation of the control equipment when the conveyor is running. Note any arching of contacts, excessive hearing of coils or resistances, and misalignment of relays, contactors, and switches. Unusual noises should also be noted.

15.2.10 Machinery Areas

15.2.10.1 Illumination. Check the machinery areas and walkways for adequate lighting.

15.2.10.2 Housekeeping. Check the machinery area for housekeeping and the presence of any flammable liquids (flash point less than 110 degrees F) or materials not necessary for the operation and maintenance of the conveyor.

15.2.10.3 Ventilation. Check the machinery area to see that adequate ventilation by natural or mechanical means has been provided to ensure safe and normal operation. Check local codes to see that machine ventilation is in compliance.

15.2.10.4 Fire Extinguisher. Check the machinery areas for fire extinguisher, proper glass,

mounting, and maintenance record tag. They should be properly mounted and maintained.

15.2.11 Machinery Area Access

Check that a permanent, safe, and convenient means of access to machinery spaces has been provided and maintained. Check stairways and ladders to see that they are stable and secure. Also check to see that the access is not infringed on by building changes. Public safety may be directly dependent on rescue personnel getting to the conveyor equipment in a hurry. The other consideration is the possible need to move large heavy equipment in and out of these areas. Access doors should be self-closing, self-locking and maintained in the closed position. In addition, Navy policy is that the machinery spaces are considered to be controlled access areas to be secured by lock and key or combination locks.

15.3 SPECIAL CONVEYOR SAFETY CONSIDERATIONS

15.3.1 Belt Conveyors - Fixed In Place

Nip and shear points shall be guarded at terminals, drives, take-ups, pulleys, and snub rollers where the belt changes directions, wrap around pulleys at the discharge end of a belt conveyor, on transfers and diverters used with belt conveyors, and shear point take-ups. It is not necessary to provide guarding along the conveyor length where the belt rides on the carrying or return rollers. Take-up mechanisms may be guarded as an entity by placing standard railings or fencing, and warning signs around the area in lieu of guarding each of the pinch, nip, and shear points. on overland conveyors, audible or visual (or both) signalling devices for warning conveyor initiation shall be required only at the transfer, loading, and discharge point, or at point where employees are normally stationed. on long overland belt conveyors where a pedestrian overpass or underpass is required, they shall be installed at intervals consistent with usage, normally not to exceed 1000 ft.

15.3.2 Bucket Conveyors

Guards shall be provided at points where personnel could come in contact with cables, chains, belts and runways of exposed bucket conveyors. Inspection doors or maintenance doors or both should include signs warning of possible danger if opened or removed while the conveyor is in operation.

15.3.3 Chain Conveyors

Chain conveyors, have moving chains that cannot be enclosed without impairing the function. They shall be provided with warning signs or personnel barriers, unless guarded by location. Where a chain conveyor is raised and lowered as a transfer device, mounted within another

conveyor, and where enclosure would impair the function, warning signs or personnel barriers shall be provided, unless guarded by location.

15.3.4 En Masse Conveyors

En masse conveyors are not considered as free standing and are to be braced. Eccentric platform loads or other lateral loads may require lateral bracing or other bracing or both. Inspection doors or maintenance doors or both should include signs warning of possible danger if opened or removed while conveyor is in operation. When coupling or uncoupling the en masse conveyor line, the line shall be restrained to prevent injury through the uncontrolled travel of the broken line.

15.3.5 Flight And Apron Conveyors - Bulk Material

Inclined apron conveyors shall be equipped with lifting blades when the conveyor inclination exceeds the angle of slide of the design material. Flight and apron conveyors should be "jogged" or hand run through at least one complete revolution to check clearances. Flight and apron conveyors handling sticky materials, which tend to build up, must be kept clean for operation.

15.3.6 Incline Reciprocating Conveyors

Means shall be provided to prevent hazard to personnel in the event of mechanical or electrical failure. The carrier must be equipped with backstop devices sufficient to stop and to hold the carrier and load. Overtravel devices shall be provided where necessary to minimize potential for injury to personnel. Riding the conveyor shall be forbidden to all personnel. warning signs to this effect shall be prominently posted at each point of access and each point of operation. The conveyor shall be guarded so as to prevent injury. The conveyor housing should be equipped with doors or equivalent devices at each manual loading and unloading station, interlocked so that they can be opened only when the carrier has stopped at that level and the carrier cannot be moved until they are closed. Conveyors automatically receiving or discharging objects should have a similar device or should be guarded by a suitable enclosure extending on all sides a safe distance from the path of the carrier. Where the application requires that personnel walk onto the carrier to load or unload, the carrier shall be provided with standard railings, with snap chains across the operating ends or equivalent. Controls must be located so they cannot be actuated by a person on the carrier. This is done to prevent a person from riding.

15.3.7 Live Roller Conveyors - Belt Or Chain Driven

Nip points occur between chain and sprockets on chain driven live roller conveyors and between belt and carrier rollers on belt driven live roller conveyors. Nip points also occur at terminals, drives, take-ups, idlers, and snub rollers where the belt changes direction. A return belt idler does not require guarding. In addition, they occur on transfers and diverters used with live roller conveyors. Shear points occur at automatic take-ups; they shall be guarded. On chain driven live rollers, in addition to covering the top of the sprockets, the guard should extend downward to obstruct entrance from the side and from below, or the underside should be covered unless guarded by location or position. on belt drive live roller conveyors, nip points between the belt and roller may be considered guarded if the load carrying rollers are spaced so as to prevent access, if plates or rods are placed between rollers, if pop-out rollers are used as load carrying rollers, or if other suitable guarding is used (such as guarding by location).

15.3.8 Mobile Conveyors

Mobile conveyors shall be provided with a brake, rail clamp, or other position loading device for each motion, such as, but not limited to, luffing, slewing, and traversing, where movement would prevent a hazard. Limit switches shall be provided on rail mounted mobile conveyors to limit the travel within design limits. Rails stops shall be provided beyond the design travel limits to physically stop the mobile conveyor in case of overtravel. Sweeps shall be provided on all rail mounted mobile conveyors to deflect objects ahead of the pinch point between wheels and rails where a hazard to personnel would result without the sweep. A mobile conveyor shall be designed to be stable against runaway or overturning under normal conditions of operation. Resting a portion of a mobile conveyor on the ground, a pile, or on any other support shall not cause instability of the machine. Where power to electrically powered mobile conveyors is provided by trolley or rail, these conductors shall be guarded in such a manner as to prevent accidental contact by personnel. When a mobile conveyor is exposed to high wind conditions and a hazard to personnel exists, normal operation shall cease and, if necessary, the conveyor shall be moved to a parking position and secured. When an operator is required on a mobile conveyor, a platform or cab shall be designed so that, when the operator is on the platform engaged in the normal performance of his duties, he will be protected from injury. where operation is such that there is danger of movement of the mobile conveyor into the stockpile or any other obstacle, a detector shall be provided to stop the conveyor movement.

15.3.9 Portable Conveyors, Extending Belt Conveyors, And Car Unloaders

The raising and lowering mechanism for the boom of a portable conveyor shall hold the boom at any rated angle of inclination. A powered extendible conveyor shall be operated with constant pressure button control and be equipped with a device located on the outermost boom end that shall stop extension of the conveyor when contact is made with the device (as may be required to protect personnel): Portable conveyors shall be stable and will not topple when in use or when being moved. Guarding may be necessary with the boom in its lowest position.

15.3.10 Pusher Bar Conveyors

If a hazard exists where the bar passes through the bed at the discharge end, suitable guards or warnings shall be provided. Loads on the incline shall have pushers of adequate height above the bed or have top restraining members. All chains should be guarded by suitable means, including warning signs, to prevent accidental contact with the moving chain. In a pusher bar conveyor having a roller bed, where the relationship between the height of the bar and the spacing of the rollers creates a hazard, adequate guarding must be provided. When a shear point exists between the return pusher bar and a frame member, guarding shall be provided. When the conveyor is automatically loaded, an automatic spacer shall be provided. When a pusher bar conveyor discharges to another conveyor, means shall be provided to stop the pusher bar conveyor in the event the receiving conveyor cannot accept another load.

15.3.11 Roller And Wheel Conveyors

When unit or package speeds could create a safety hazard limiting the length of the pitched run or by using speed retarders, brakes or other means that effectively provide the control needed shall be employed. Personnel shall not be allowed to walk or step on free turning rollers or wheels. Suitable means, such as tread plates, can be used between the rollers as a walking surface for designated operators in the performance of their duties. Rollers and wheels must be free running to prevent unintentional diverting of units being conveyed.

15.3.12 Screw Conveyors

Screw conveyors shall not be operated unless the conveyor housing completely encloses the conveyor moving elements, and power transmission guards are in place, except if the conveyor must have an open housing as a condition of its use and application. The entire conveyor is then required to be guarded by a railing or fence, unless guarded by location.

Feed openings for shovel, front end loader, or other manual or mechanical equipment shall be constructed in such a way that the conveyor screw is covered by grating. If the nature of the material is such that a grating cannot be used, then the exposed section of the conveyor is to be guarded by a railing and there shall be warning signs posted.

15.3.13 Shuttle Conveyors, Belt Trippers, And Transfer Cars

The conveyors shall be provided with a brake, rail clamp, or other position locking device. Means shall be provided to limit travel. Stops shall be provided beyond the normal travel limits to stop the conveyor in case of overtravel. When the conveyors and its path are obstructed from the view of the controlling operator, the conveyor shall have a device to warn of its movement. Sweeps shall be provided for all moving cars, trippers, or shuttles to deflect objects ahead of pinch points between wheels and rails. Although all nip and shear points shall be guarded, it is not necessary to provide guards where the belt rides on the idlers. Trippers or shuttles may discharge into silo or bunker openings, with or without seals. In either case, openings shall be provided with grating to suit the material being handled, and the width of the openings shall not be large enough to permit personnel to fall through. Where material size requires openings that would permit personnel to fall through, the openings shall be protected by other means. Where power is electrically provided via trolley or rail, these power conductors shall be guarded in such a manner as to prevent accidental contact by personnel. In explosive areas, explosion proof equipment and cable reels shall be used instead of trolley or rail. When an operator is required to move with the shuttle, tripper, or transfer car, a work station shall be constructed for his protection.

15.3.14 Skip Hoists - Bulk Materials

Limit switches shall be provided to establish limits of travel of the skip bucket. Additional switches shall be provided to interrupt the power supply and actuate the hoist brake whenever the skip bucket exceeds the design travel limit by a predetermined safe distance. Slack cable switches shall be provided and so arranged that whenever the skip hoisting rope develops slack or loses tension due to sticking in the guides, overtravel, or for any other reason, power to the drive will be cut off and the brake will be set. Riding the skip bucket by personnel shall be forbidden. All sheaves shall have guards to prevent the wire rope from coming off the sheaves under a slack cable or similar condition. If the hoist unit is located in an area that is generally accessible, then a complete wire mesh or similar guard shall be placed around the hoist. This guard is not required when guarded by location. The following wearing parts should be regularly and frequently inspected:

a. brake shoes and brake operating parts

b. hoisting ropes, clamps, and attachments

c. sheaves, particularly head sheaves

d. tracks, wheels, and mechanisms

e. limit switches and slack cable device

15.3.15 Slat Conveyors And Roller Slat Conveyors

A slat conveyor can present a shear point when the gap between the slats is great enough to permit access to cross members below the slats. A hazard also exists At the tail end of a slat conveyor in which the slats are above the center line of the chain. The gap between slats closes when the slats reach the top surface of the conveyor. This area should be guarded. If the material flow enters over the tail sprocket, making guards impractical, a warning sign should identify the hazard.

15.3.16 Suspended Vertical Tray Conveyors

Means shall be provided to sense overloads where these loads could cause failure and injury to personnel. The conveyor shall be housed so as to prevent injury from inadvertent physical contact with moving parts of the equipment. The housing should be equipped with doors or equivalent device at each manual loading station, interlocked so that they can be opened only when the pendant tray, car, or carrier has stopped and the pendant tray, car, or carrier cannot be moved until the doors are closed. Vertical tray conveyors automatically receiving or discharging objects should have a similar device extending on all sides a safe distance from the path of the carrier.

15.3.17 Tow Conveyors - In The Floor

A clearance space for personnel shall be provided between the side of a cart, or between any load overhanging the side of a cart, and any fixed or moving object. The cart path shall be identified by a floor stripe parallel to the cart path, one line on each side, located a safe distance from the edge of the cart or overhanging load. Where wall openings or other conditions do not permit a safe clearance, the reduced clearance area shall be marked with appropriate warnings. Where a cart may change its direction without warning, such as switching off the main line into a transfer conveyor or a spur, this area shall be marked with an appropriate warning such as diagonal stripes on the floor within the clearance lines. Where carts start automatically, a warning is required.

Means shall be provided to allow the operator to disengage the tow pin from the conveyor pusher without being in front of the car. Provisions shall be made to prevent runaway carts from exiting the ramp zone and entering work areas. Ramps with traffic aisles shall have a barrier of sufficient strength and height to prevent a runaway cart from entering the traffic aisle. Ramps without traffic aisles shall have warning signs to warn personnel not to enter. Means shall be provided to maintain the stopped position of a ramp conveyor or carts under maximum rated load condition.. Where there is a projection above the floor, the projection and adjacent areas shall be identified by appropriate diagonal stripes, or warning signs, or both. This identification shall particularly apply to devices that project intermittently at unpredictable times.

15.3.18 Trolley Conveyors And Power And Free Conveyors

In areas where the parted chain, cable, or other linkage would permit a runaway condition on an inclined or declined section, and where personnel are present, antirunaway devices shall be provided. The conveyor path may be arranged so that travel of the uncontrolled conveyor will be arrested before it enters in an area where personnel are present. In areas where personnel perform work on the load and guards would impair their function, the loads must be cradled, hooked, bolted, or securely attached by some means to the carrier. Nip points occur at traction wheels, sprockets, caterpillar drives, and roller turns, and shall be guarded unless guarded by location. The telltale effect of the moving conveyor components serves as a warning device and permits unguarded nip points at height of less than 7 ft. Automatic stops or closures shall prevent a trolley or trolleys from moving off the tracks during the portion of a cycle when any track end is not aligned with it mating member. Hoisting equipment for lift section or drop sections or both shall stop or control the vertical motion in the event of power failure. on inclined or declined conveyors or sections, where personnel are present and there may be an occurrence of uncontrolled movement of a free trolley, arresting devices shall be provided. A rigid pusher dog on the power chain with positive carrier engagement shall be considered an acceptable means, or the conveyor path may be arranged so that travel of the uncontrolled free trolley, carrier, or load, or combination thereof, will be arrested before it enters the personnel area. Guards shall be provided to restrict unauthorized personnel from entering hazardous loading, unloading, and transfer areas. When guarding is not feasible, clear and legible warnings shall be provided. Access to lift or drop sections shall be guarded to prevent unauthorized personnel from entering the area. Warning signs shall be posted where guarding is not feasible, unless access to lift or drop sections is guarded by location. Where conveyors are located above personnel and the possibility exists that the transported product may fall off from any cause, guards (spill guards) shall be provided.

15.3.19 Vertical Articulated Platform Conveyors

Control systems shall include means to prevent jamming or spilling objects. Means shall be provided to stop the conveyor in the event a jam occurs. The conveyors shall be enclosed to prevent inadvertent physical contact with the moving parts of the equipment. The entry and exit openings in the enclosure shall be guarded by extending the enclosure side guards a safe distance from the path of the vertically moving platform. A top cover shall be provided to form a tunnel if practical.

15.3.20 Vertical Chain Opposed Shelf Type Conveyors

Overload devices shall be furnished to stop the conveyor in the event a jam occurs. The conveyor shall be housed so as to prevent inadvertent physical contact with the moving parts of the equipment. The conveyor housing should be equipped with doors or equivalent devices at each manual loading and unloading station, interlocked so that they can be opened when the carrier has stopped and the carrier cannot be moved until they are closed. Vertical chain opposed shelf type conveyors automatically receiving or discharging objects should have a similar device or be guarded by a suitable enclosure extending on all sides a safe distance from the path of the carrier platform.

15.3.21 Vertical Reciprocating Conveyors

Means shall be provided to prevent hazard to personnel in the event of mechanical or electrical failure. The carrier must be equipped with backstop devices sufficient to stop and to hold the carrier and load. Overtravel devices shall be provided where necessary to minimize potential for injury to personnel. Riding the conveyor shall be forbidden to all personnel. warning signs to this effect shall be prominently posted at each point of access and each point of operation. The conveyor shall be guarded so as to prevent inadvertent physical contact. The housing should be equipped with doors or an equivalent device at each manual loading and unloading station, interlocked so that they can be opened only when the carrier has stopped at that level and the carrier cannot be moved until they are closed. Conveyors automatically receiving or discharging objects should have a similar device or should be guarded by a suitable enclosure extending on all sides a safe distance from the path of the carrier. Where the application requires that personnel walk onto the carrier to load or unload, the carrier shall be provided with standard railings, with snap chains across the operating ends or equivalent. Controls must be located so they cannot be actuated by a person on the carrier. This is done to prevent a person from riding on the equipment.

CHAPTER 16

STACKING CRANES (FIXED)

16. INTRODUCTION

NOTE: Paragraphs identified with a vertical line in the left margin are inspections that should be made by certified Vertical Transportation Equipment Inspectors only.

16.1.1 Scope

The inspection of fixed stacking cranes included in this chapter is not only an inspection of all safety related functions, but is also an inspection to determine the condition of the maintenance needed to keep the crane operating. When preventive maintenance is lacking, shut downs will occur. In this chapter we will identify specific published safety standards that relate directly to the inspection procedure being followed in this text. It is intended that each noted standard should be reviewed as it is identified. Safety as well as performance considerations of the inspection will be addressed in the following text. See Figures 16-1, 16-2, 16-3 and 16-4 that show a typical stacker crane and components with names that will be used in this chapter.

16.1.2 Purpose

The purpose of this inspection is to review the entire stacker crane installation to ascertain that the equipment is being properly maintained and is in a safe operating status. Because the operation requires an operator to ride the device and the device is exposed to people, the inspection should have emphasis directed towards those areas that directly relate to the safe operation by the user personnel and its exposure.

16.1.3. Use

Stacker cranes are used to place and retrieve stored materials in a warehouse type environment. The device operates both horizontally and vertically. The vertical movement is guided by fixed rails contained with the unit and the horizontal movement is on fixed rails adjacent to the storage area it serves. The movement of the device is controlled by an on-board operator. No other persons are permitted to ride on the unit.

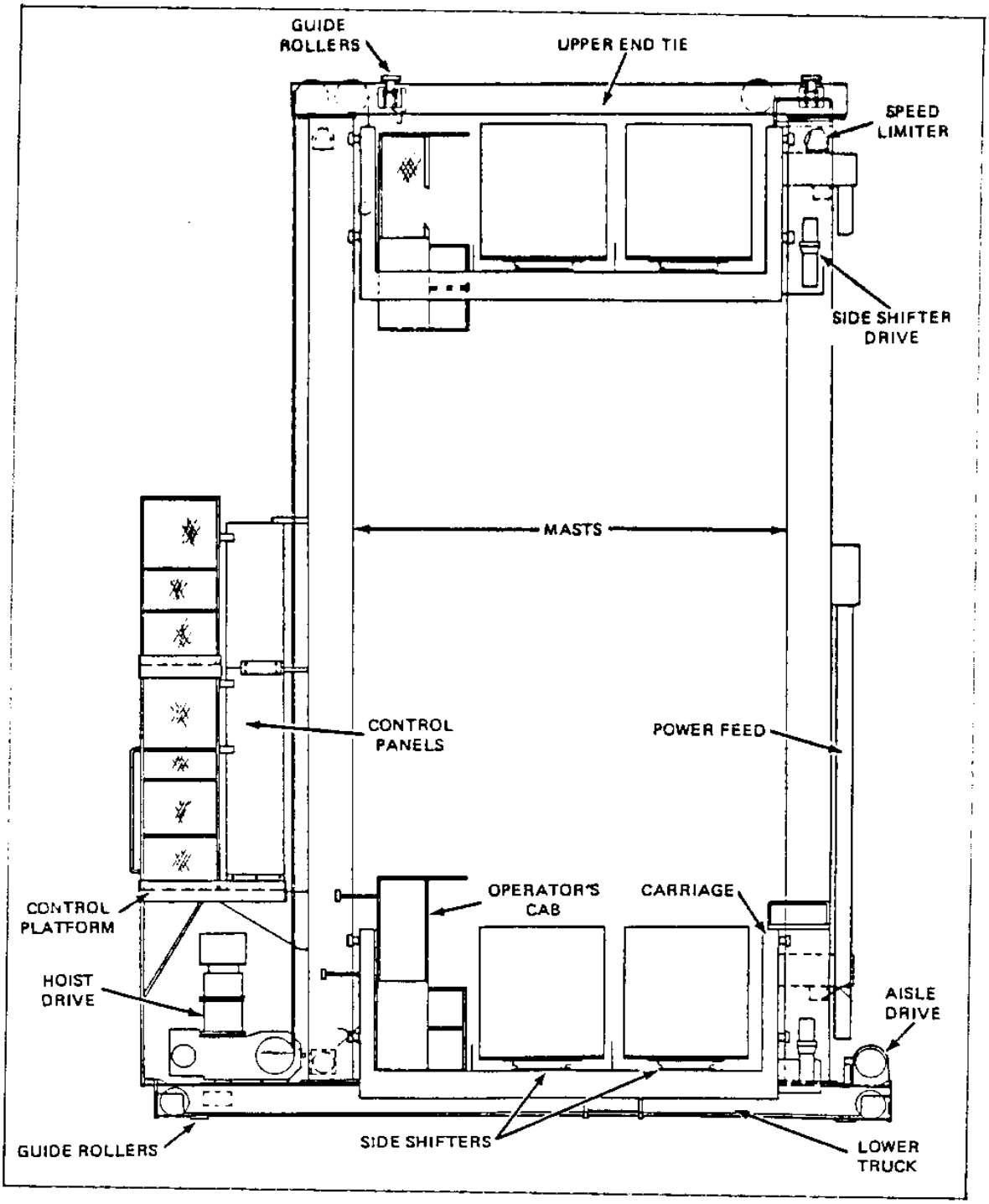

FIGURE 16-1
Typical Captive Aisle Stacker Crane
(Elevation View)

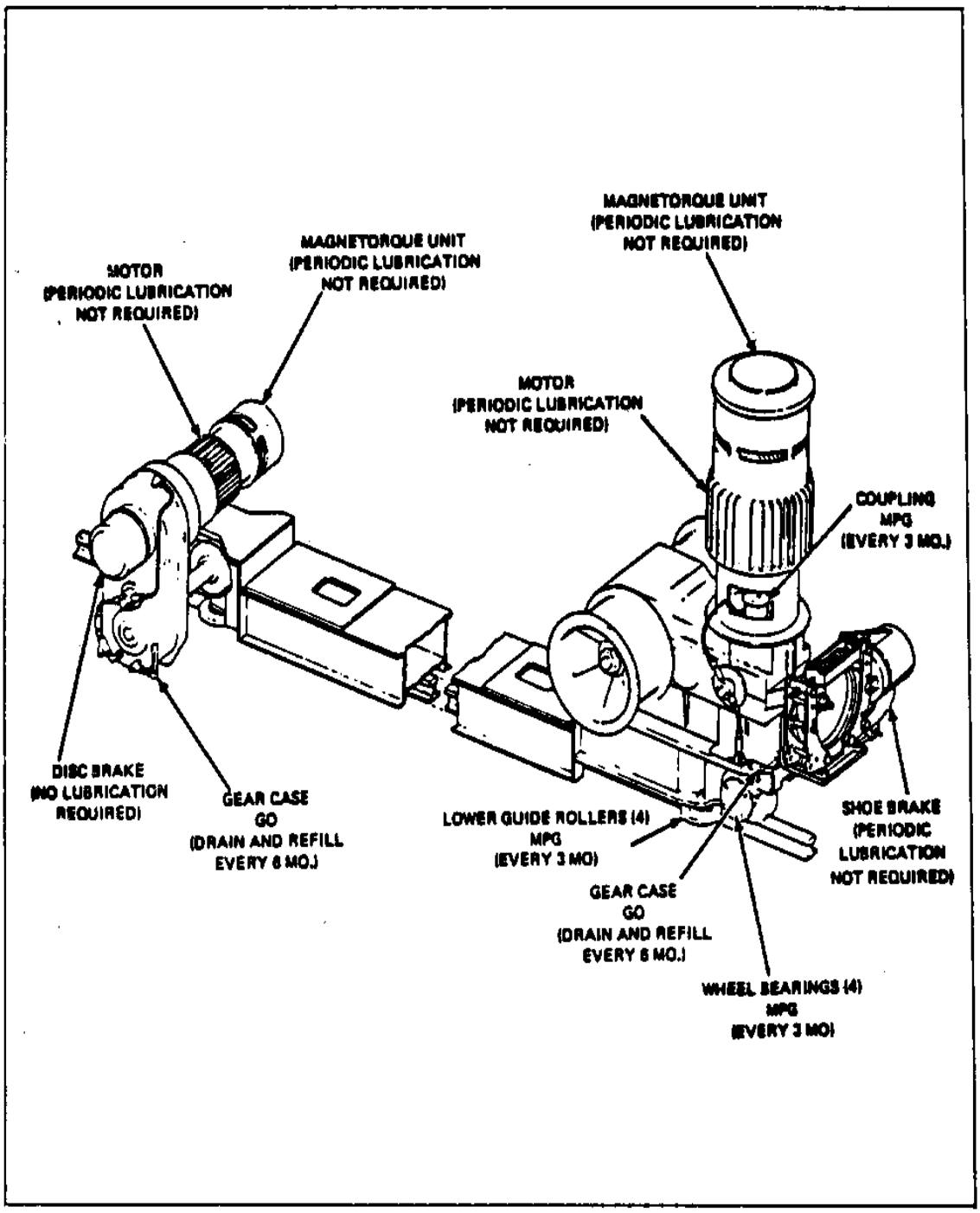

FIGURE 16-2
Lower Truck Lubrication Chart

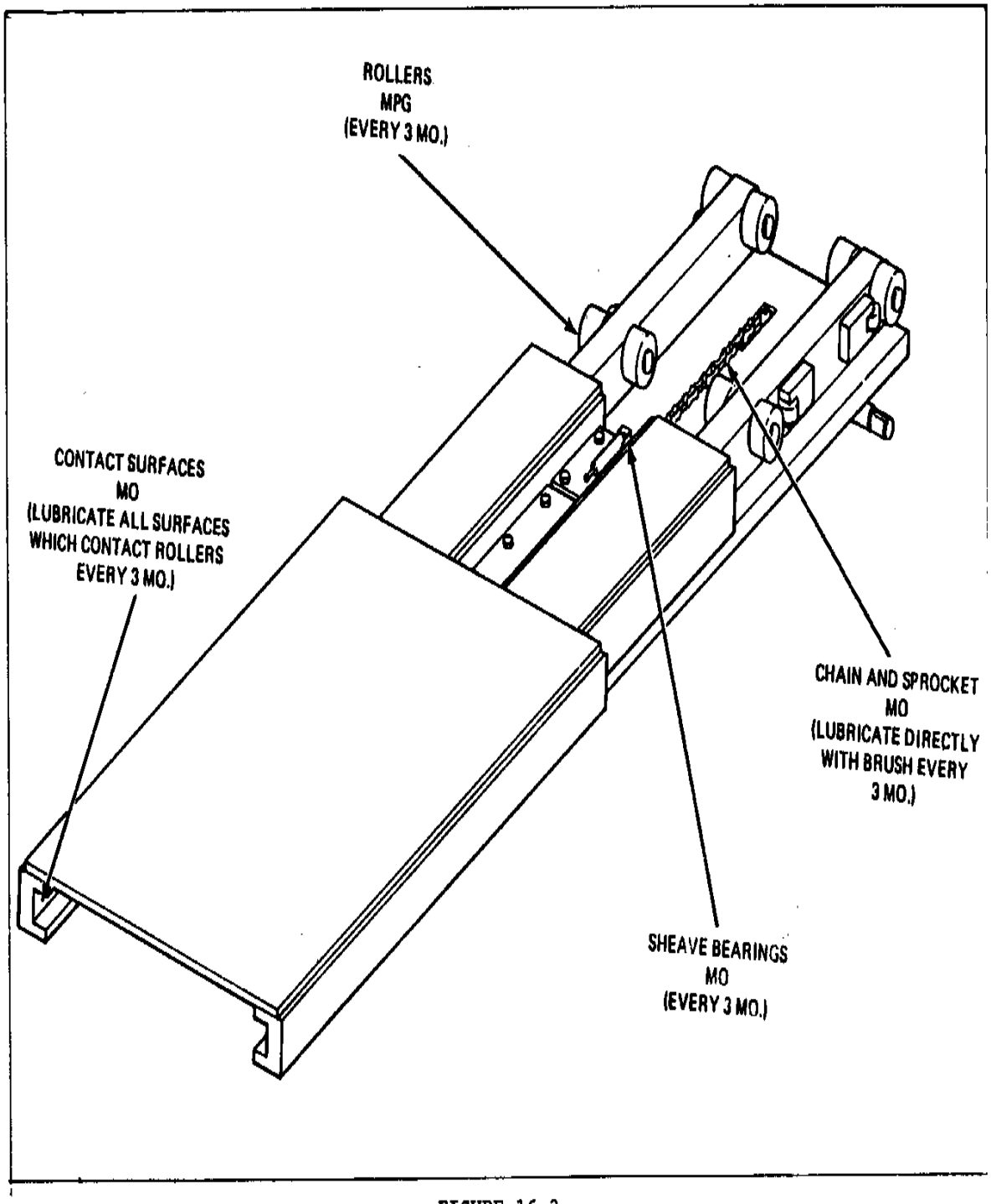

FIGURE 16-3
Typical Side Shifter Assembly, Lubrication Chart

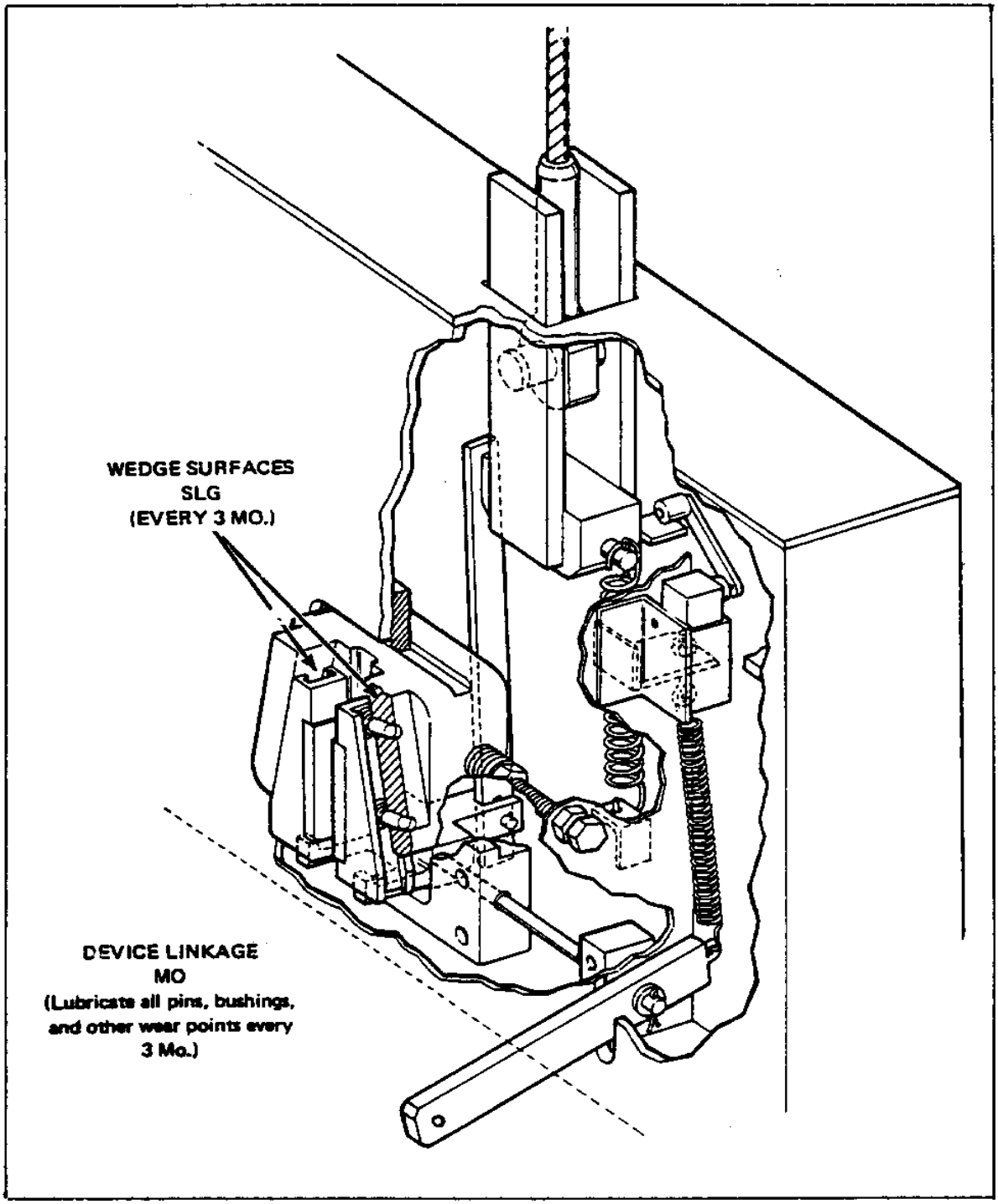

FIGURE 16-4
Typical Broken Rope Safety Device, Lubrication Chart

16.1.4 Applicable Safety Standards

There is no safety standard written specifically for this type of equipment. Section 5 GENERAL SAFETY STANDARDS ANSI/ASME B20.1 Safety Standards for Conveyors and Related Equipment and ANSI A10.5 Safety Requirements for Material Hoists could be used for guidance.

16.1.5 Inspection Interval

The inspection interval should be determined by the application of the equipment and the environment in which it works. It is recommended that these devices be inspected every month but not less than bimonthly.

16.2 INSPECTION MADE FROM INSIDE CAB

16.2.1 General Safety Precautions

Visually inspect the crane's runway and adjacent storage racks for personnel and/or objects in the aisle or protruding from the storage bins. Determine that all loose items such as tools or materials are removed from the carriage before attempting operation. Inspect the crane's controls for any markings or other methods indicating that the crane is not to be operated. Such markings may mean that the crane is inoperative or in the process of being repaired. Place a sign on the disconnect switch stating that the crane is being inspected. Determine that all the guards are in place.

16.2.2 Enclosure

Determine that the cab enclosure is structurally sound and securely fastened. Examine lighting fixtures to determine whether they are securely fastened and have required protection. Determine that sufficient illumination is provided. Determine that a fire extinguisher is properly mounted and available. Open the cab gate and determine that the cab will not move with gate open. Determine that a seat belt is provided for the cab operator. Determine that a lifeline is provided for the cab operator if evacuation is necessary, from the crane, when in an elevated position.

16.2.3 Operation

Check controls for proper identification. (See Figure 16-5). Depress the stop switch and note whether the crane will operate. Movement of the joystick should not move the crane unless both foot switches and the hand

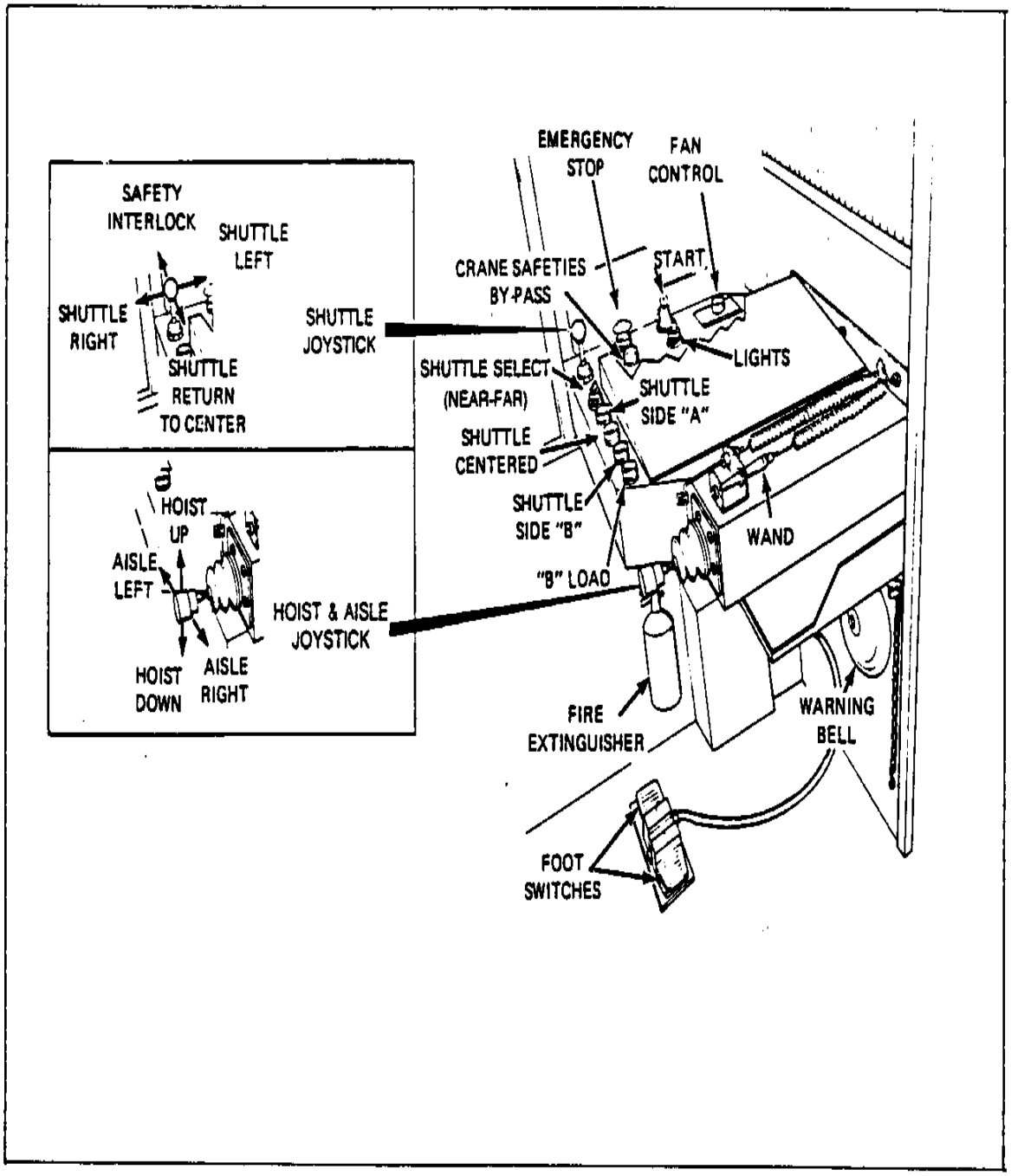

FIGURE 16-5
Operator's Controls

operated safety interlock control are in the operating positions. With the crane running, release any, either or both of the foot switches or the safety interlock. All crane motions should stop. It will be necessary to release both foot switches as well as the safety interlock and the joystick master before motion can be resumed. With the foot switches and the safety interlock in operating position, place the joystick control in the full or hoisting direction. The platform should decelerate from full speed to slow speed and automatically stop at the upper limit. Reverse the direction and check the lower limit. With the foot switches and the safety interlock in operating position, place the joystick control in full forward position. The crane should decelerate and stop at the end of the aisle. Reverse the direction and check the reverse aisle limit switch.

16.3 INSPECTION OF THE BRIDGE

16.3.1 General

The bridge is that part of the crane consisting of the lower truck, hoist drive system, hoist drum, and aisle drive.

16.3.2 Guides

Determine that the floor mounted guide rail is free of debris. Check all lower guide rollers for worn or damaged wheels, bearings or shaft pins. (See Figure 16-6). Inspect the wheels for cracks or chipping. Inspect the wheels for flat spots and any unusual wear patterns or markings. Check the wheel bearings for adequate lubrication. Inspect the wheels for excessive float. Wheel float is the amount the wheel can move across the rail. The allowable wheel float is approximately 1/8 inch. If any of these conditions exist, the wheels must be repaired or replaced.

16.3.3 Hoist Drive System

Check the brake linings for wear, and the air gap for proper spacing. Check the mounting bolts to insure they are tight. Check the hoist drive system (See Figure 16-7). The hoist drive system consists of a motor, gear case, holding brake, load brake and hoist drum. The hoist drive system serves to raise and lower the carriage by wire ropes. Hoisting power is provided by an AC wound rotor type motor driving the rope drum through a reduction gear box. A magnetorque load brake is employed to help control the speed of the hoist motor. A spring-set shoe type motor brake is used to stop the motor. This motor brake holds the hoist system in position until power is reapplied. Check the motor bearings for proper lubrication and vibration due to wear. Check motor brushes for adjustment or replacement and the slip ring for reconditioning. Check the gear case for proper oil level, using the visual oil level indicator.

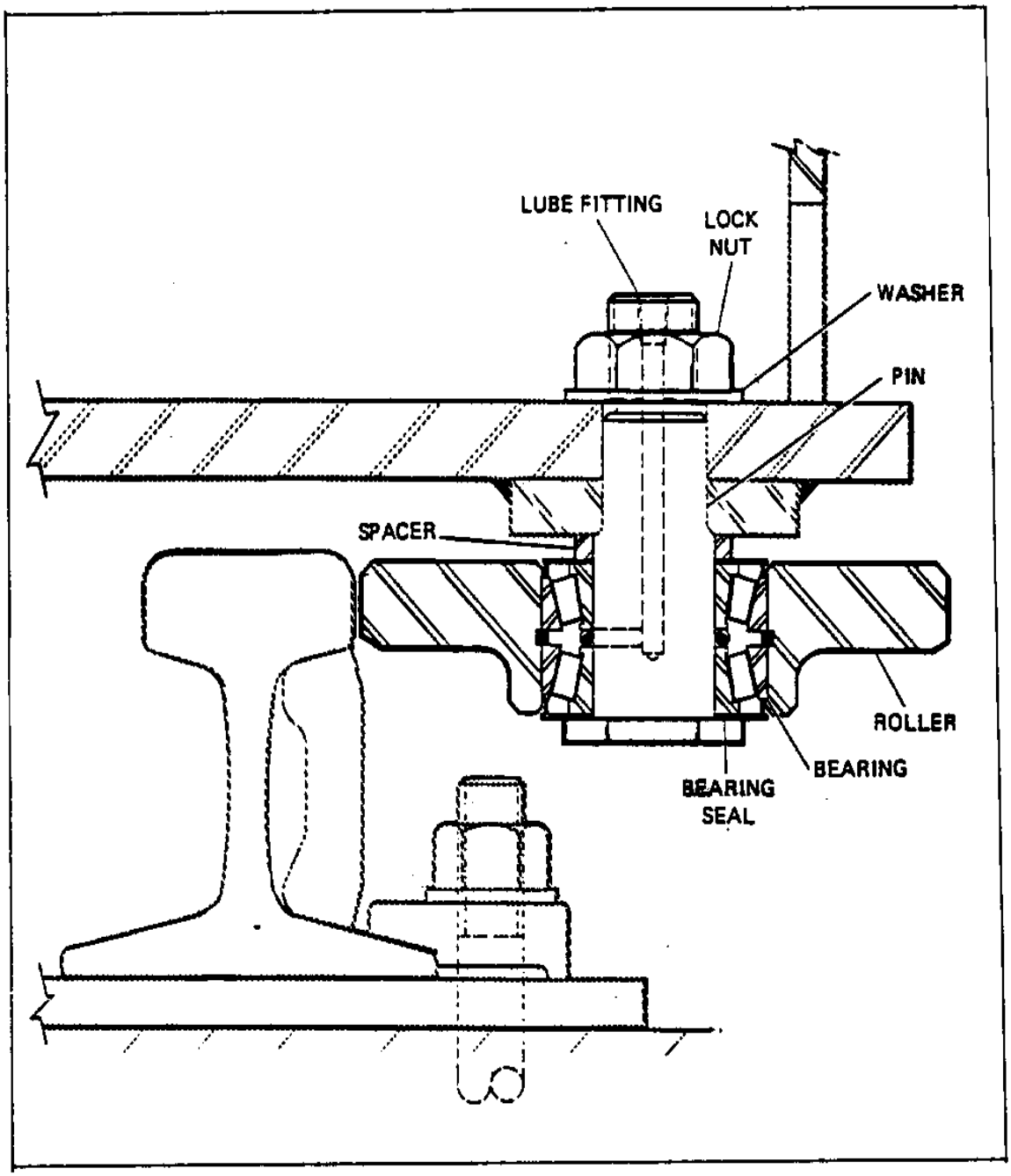

FIGURE 16-6
Lower Guide Roller Assembly

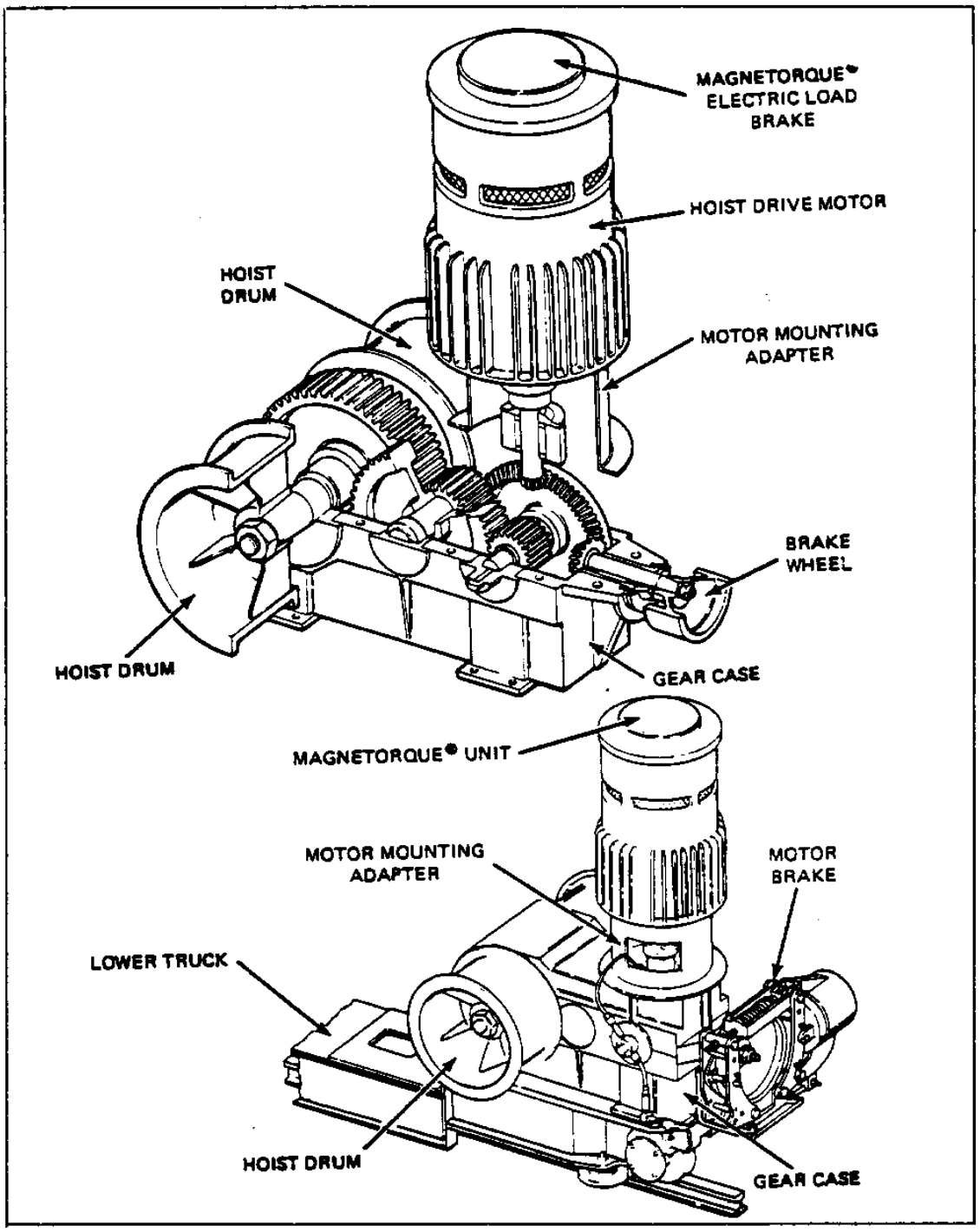

FIGURE 16-7
Hoist Drive System

The oil level should not exceed the level indicator. If the gear case is overfilled it will not retain the excessive oil and will leak onto other components. (See Figure 16-8). Check the gear for excessive backlash and possible excessive shaft end play.

16.3.4 Hoist Drum

The hoist drum is a machined circular casting mounted on the side of the gear case. The drum is used to take up and let out the wire ropes that raise and lower the crane carriage. The hoist drum should be examined and tested with light blows from a hammer. If the resulting sound from the blows is dull and flat unlike the ring given by sound metal, the hoist drum should be examined carefully for cracks. The hoist drums are irreparable items. If the drums have any clicks, new drums must be installed.

16.3.5 Wire Rope or Cable

16.3.5.1 General. All wire rope will eventually deteriorate to a point where it is no longer serviceable. There are three basic causes of wire rope deterioration. They are:

a. Abrasion or wear
b. Corrosion
c. Fatigue, caused by the pulling, bending, crushing or kinking forces applied to the rope during normal services.

None of the above causes of deterioration can be eliminated entirely. However, all three can be minimized, thus insuring the longest possible safe service life from the rope.

16.3.5.2 Inspection. The first step toward the proper care of wire rope is an inspection schedule. All wire rope used for lifting of loads should be inspected on a periodic basis, preferably at least weekly. This inspection should be aimed at determining the degree of deterioration at the worst rope lay since this will determine the suitability for continuous service. By definition, a rope lay is the axial distance along the rope in which one strand makes one complete turn around the rope. The inspector should pay particular attention to the following:

a. Internal wear caused by grit penetrating between the strand and wires.

b. Kinking.

c. Lubrication.

d. Corrosion.

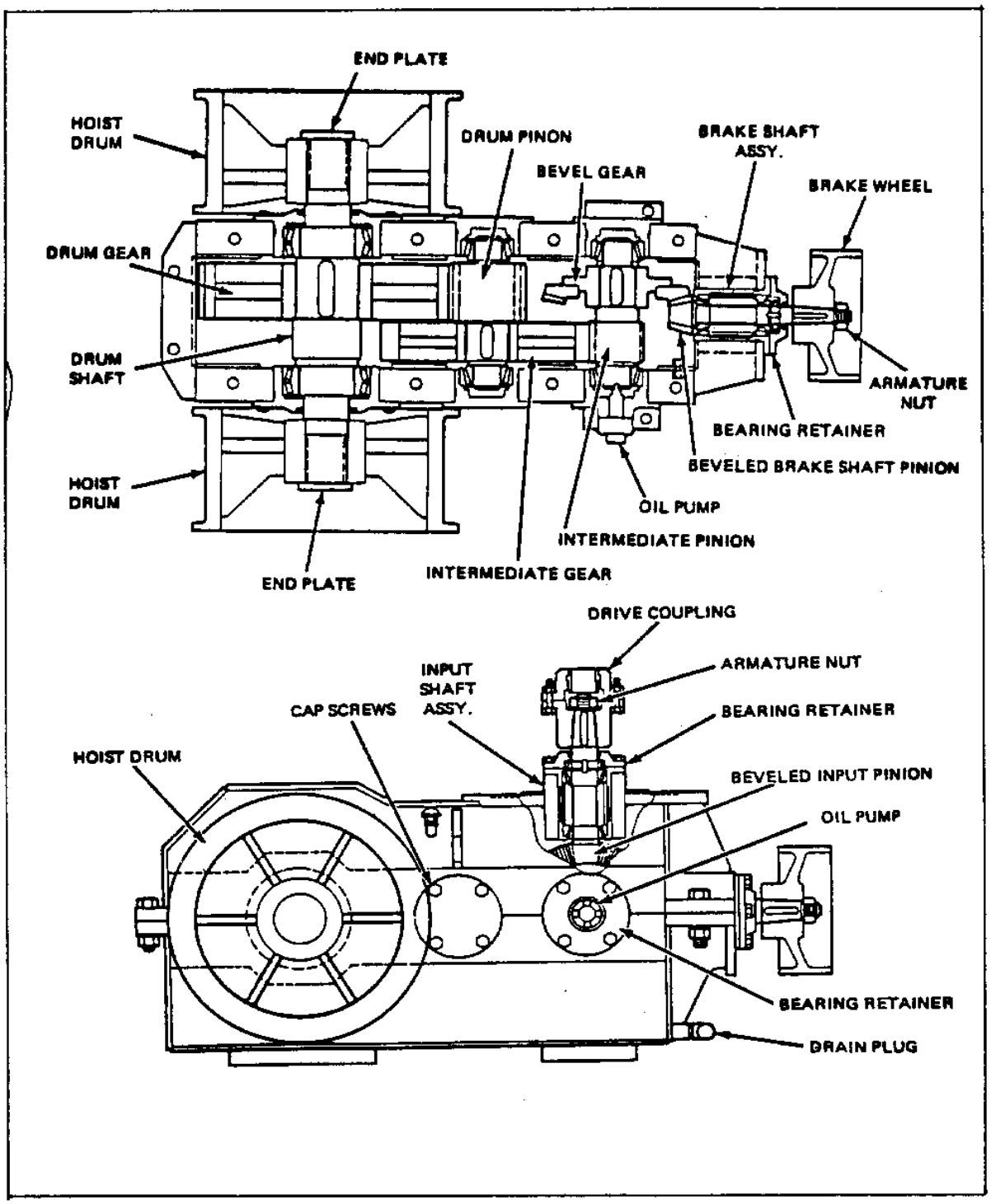

FIGURE 16-8
Hoist Drive Gear Case Assembly

e. Number of broken strands per lay.

f. The manner in which the fittings are attached.

g. The condition of the sheaves over which the rope must pass, including sheave alignment.

h. The amount of wear on the outer wires.

Any evidence of serious rope deterioration from corrosion should cause consideration to be given to immediate replacement of the rope. More than one strand should be cause for caution. Breaks occurring in the valley between adjacent strands are generally a warning of an abnormal condition, justifying caution. Any broken wires at the dead end of a cable should be cause for cutting off a section. Preferably at least three feet beyond the broken wires. Refasten the rope. If the rope is not long enough, use a new piece of rope. Any of the following conditions should cause the inspector to question the remaining strength of a rope, and to give consideration to the possibility of discarding the rope:

a. If the core shows through more than one pair of strands.

b. If kinking damage is severe.

c. If there is evidence of improper lubrication, combined with other defects.

d. If wire has come in contact with an electrical circuit or has been subjected to overheating.

e. If there is serious reduction in rope diameter.

f. If there is evidence of "bird-caging". This increased diameter is usually caused by the sudden releasing of a heavy load while the rope is twisted.

g. If there are numerous broken wires or as many as three adjacent broken wires in one rope lay.

16.3.6 Inspection Of The Broken Rope Safety Device

(See Figure 16-9). The function of the broken rope safety device is to prevent the carriage from free-falling in the event of a broken (or slack) hoist cable. Sliding wedges are used to "Jam" the carriage against the mast to prevent it from free-falling. one complete installation is found on each side of the carriage. Actuation of the slack cable limit switch occurs in

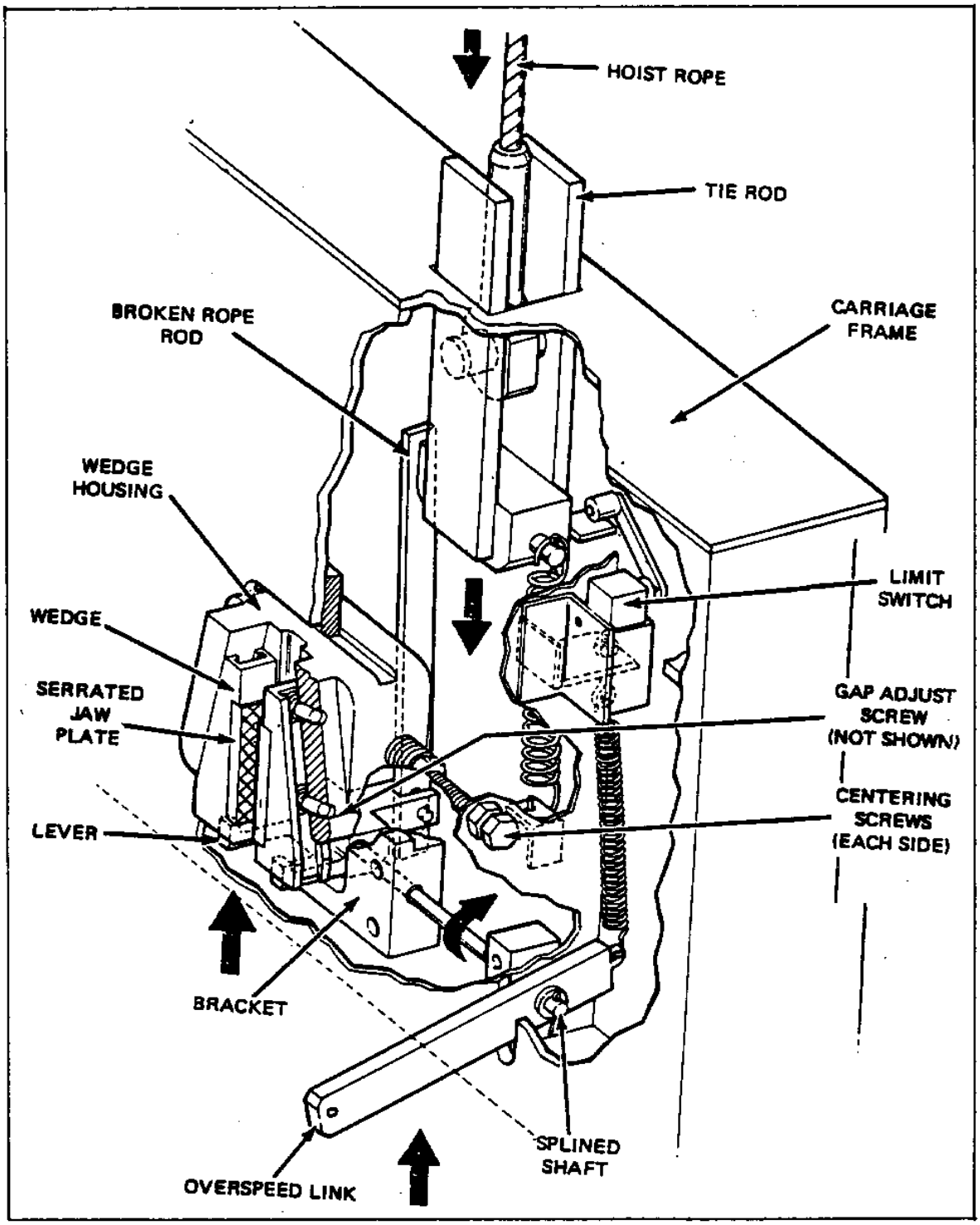

FIGURE 16-9
Typical Broken Rope Safety Device

conjunction with the engagement of the wedges. The switch is normally held closed and opens as the associated link is pivoted by its spring. Opening the switch contacts breaks the circuits to the hoist motor contractors. Simulate a slack or broken rope condition as follows:

a. Position a suitable hydraulic floor jack directly under a structural part of the platform.

b. Lower the platform onto the jack.

c. With the jack, raise the platform until a slack cable condition is achieved.

d. Release the jack so it no longer supports the platform.

e. The broken rope safety device shall prevent the platform from falling.

f. To reset the broken rope safety, depress and hold the crane safeties bypass switch and place the joystick master in the hoist direction.

g. Check the hoist drum to insure that the cable has not jumped any grooves.

16.4 INSPECTION OF THE AISLE DRIVE

16.4.1 General

The aisle drive system consists of a motor, gear case, motor brake, load brake, drive wheel and idler wheel. (See Figures 16-10 and 16-11). Motor torque is transmitted through the reducer gear case to the flangeless drive wheel, which drives the entire stacker along the single rail mounted on the floor. Speed control is achieved by varying the excitation current to the drive motor field and the magnetorque load brake. The holding brake, which is a disc type brake, serves to bring the crane to a complete stop and to hold the crane in position. This brake is spring-set and electrically released.

16.4.2 Motor

Check the motor bearings for proper lubrication and vibration due to wear. Check the motor brushes for adjustment or replacement and the slip ring for reconditioning and cleanliness.

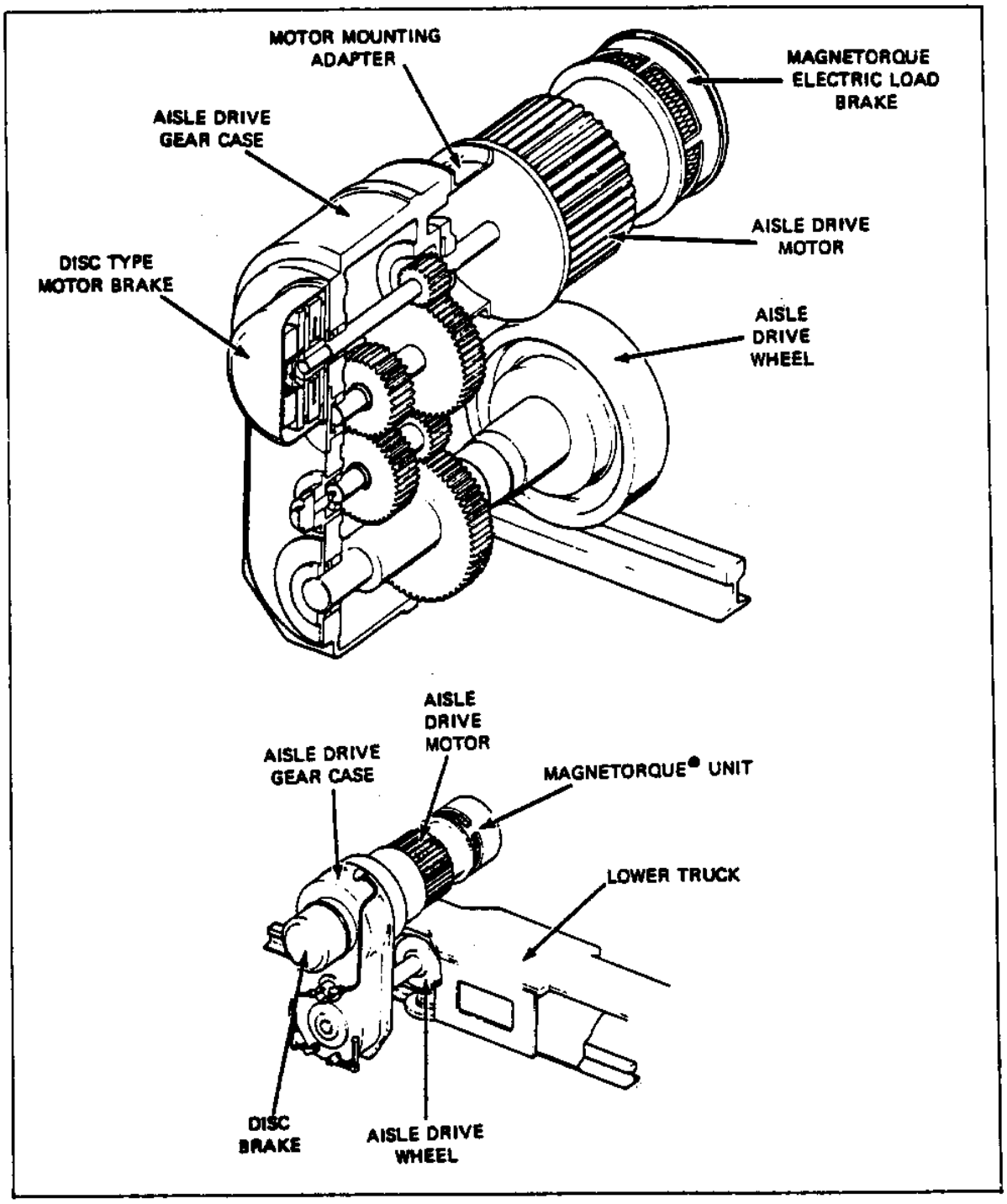

FIGURE 16-10
Aisle Drive System

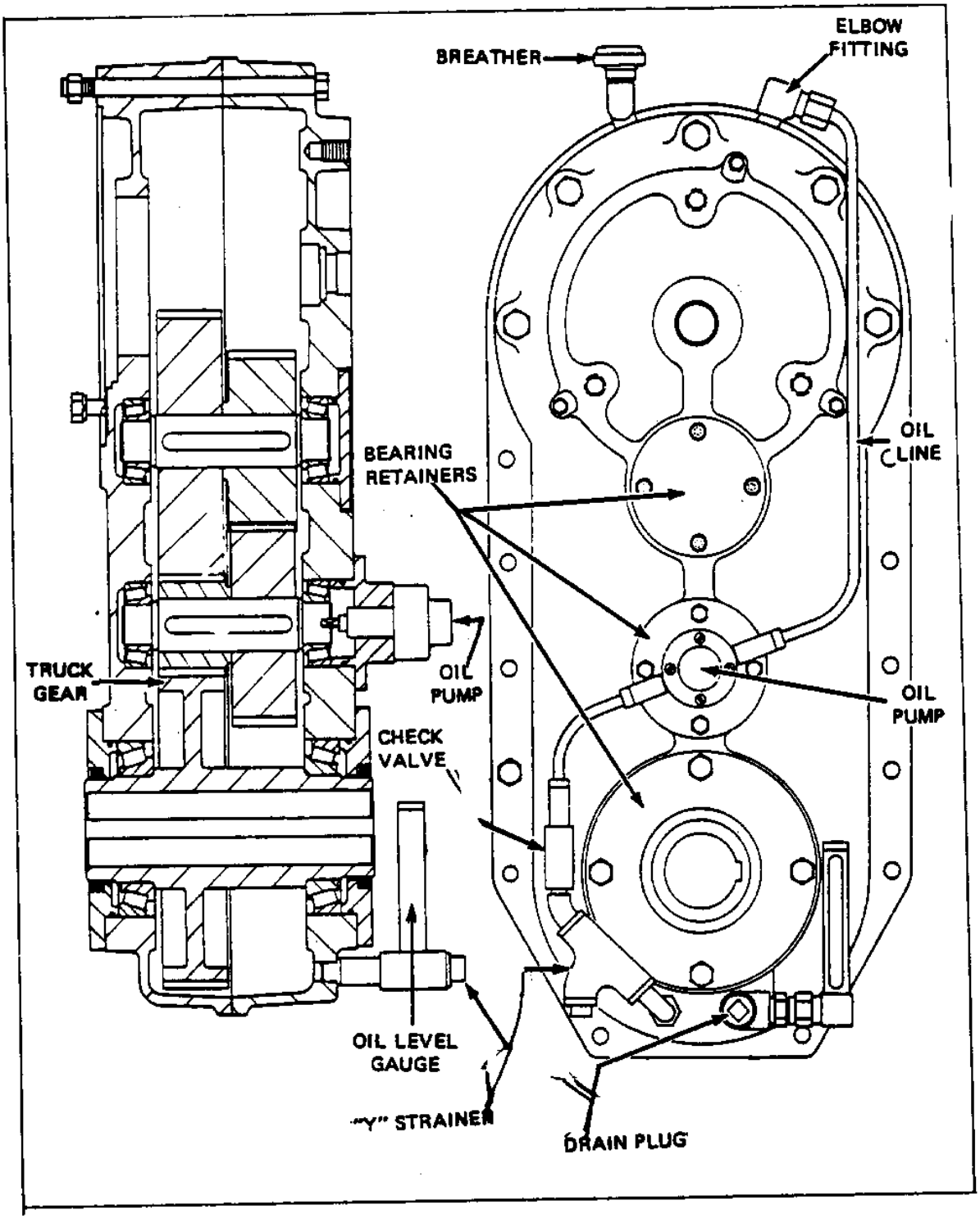

FIGURE 16-11
Aisle Drive Gear Case Assembly

16.4.3 Gear Case

Check the gear case for proper oil level, using the visual oil indicator. The oil level should not exceed the level indicator. If the gear case is overfilled, it will not retain the excessive oil and will leak onto other components. (See Figure 16-10). Check the gear for excessive backlash and possible excessive shaft end play.

16.4.4 Wheels

Check the aisle drive wheel for cracks or chipping. Inspect the wheels for flat spots and any unusual wear patterns or markings. Inspect the wheel bearings for adequate lubrication.

16.4.5 Magnetorque Load Brake

The magnetorque load brake transmits braking force by means of electromagnetic fields. (See Figure 16-10). There are no mechanical connections between the rotating unit and stationary members. At periodic intervals, depending on the operating environment, the magnetorque must be either vacuumed or blown out with dry, compressed air (50 psi maximum) to remove accumulated dirt and dust in the interior. Determine that the ventilation openings are clear. Determine that no dirt or dust has accumulated in the interior. Check the bearings for proper lubrication.

16.4.6 Inspection of Motor Brake

The aisle drive system employs a disc-type motor brake as a holding brake. This brake is spring set and electrically released. No lubrication is required on these brakes. Oil or any other lubricant applied to parts of the brake may interfere with proper, safe operation of the brake, especially if the oil comes in contact with the disc plates, back plates or friction discs. Check the brake for evidence of mechanical failures, misalignment or other defects. Check that the friction discs are clean, free of oil, and not excessively worn. Examine the discs for signs of warpage and for reduced size due to wear. Discs worn to approximately 3/16 inch thick or less must be replaced.

16.5 INSPECTION OF THE CONTROLLER

16.5.1 General

The controller is a cabinet with a locked cover or door. It contains an assembly of devices for starting, stopping, accelerating or decelerating a drive. They regulate the power delivered to a motor or other equipment. The relays, fuses and other protective devices are also mounted in the controller.

16.5.2 Inspections

Inspect the condition of the main line switch before inspecting any part of the controller. opening the main line switch should remove all power from the controller. Examine all relays, switches, contactors, control circuit rectifiers, transformers, capacitors, reactors, etc. Any excessively worn or burned contacts, broken connectors, broken or cracked resistors, or tubes should be replaced. All fuses should be one time fuses and should not have any shorting wires. Check for cleanliness and for accumulation of combustible materials on any parts.

16.6 INSPECTION OF THE CARRIAGE

16.6.1 General

The carriage serves as the local carrying medium, transporting material to and from storage locations. (See Figure 16-12). It is raised and lowered between the masts by means of wire ropes reeved to the hoist drums via the cranes upper end tie. Guide rollers are provided on each side of the carriage, allowing it to move up and down the mast with a minimum of friction. A number of limit switches and photo-electric scanners are used on the carriage assembly, to monitor the movement of the crane and the position of the load.

16.6.2 Guide Rollers

Check the carriage guide rollers for cracks or chipping. Inspect the rollers for flat spots and any unusual wear patterns or markings. Check the roller bearings for adequate lubrication. Examine the rollers for excessive float. If any of the above conditions exist, the rollers must be repaired or replaced.

16.6.3 Carriage Spring

Check the carriage spring adjustments. (See Figure 16-13). The centering springs should be adjusted to maintain a 3/16" gap between the jaw and the rail.

16.6.4 Shifter Assembly

Inspect the side shifter assembly. (See Figure 16-14). The side shifter or shuttle is a telescoping device mounted on the carriage and extending in either direction in order to place or retrieve a load. Examine the sprockets and chains for signs of wear, misalignment, or other defects.

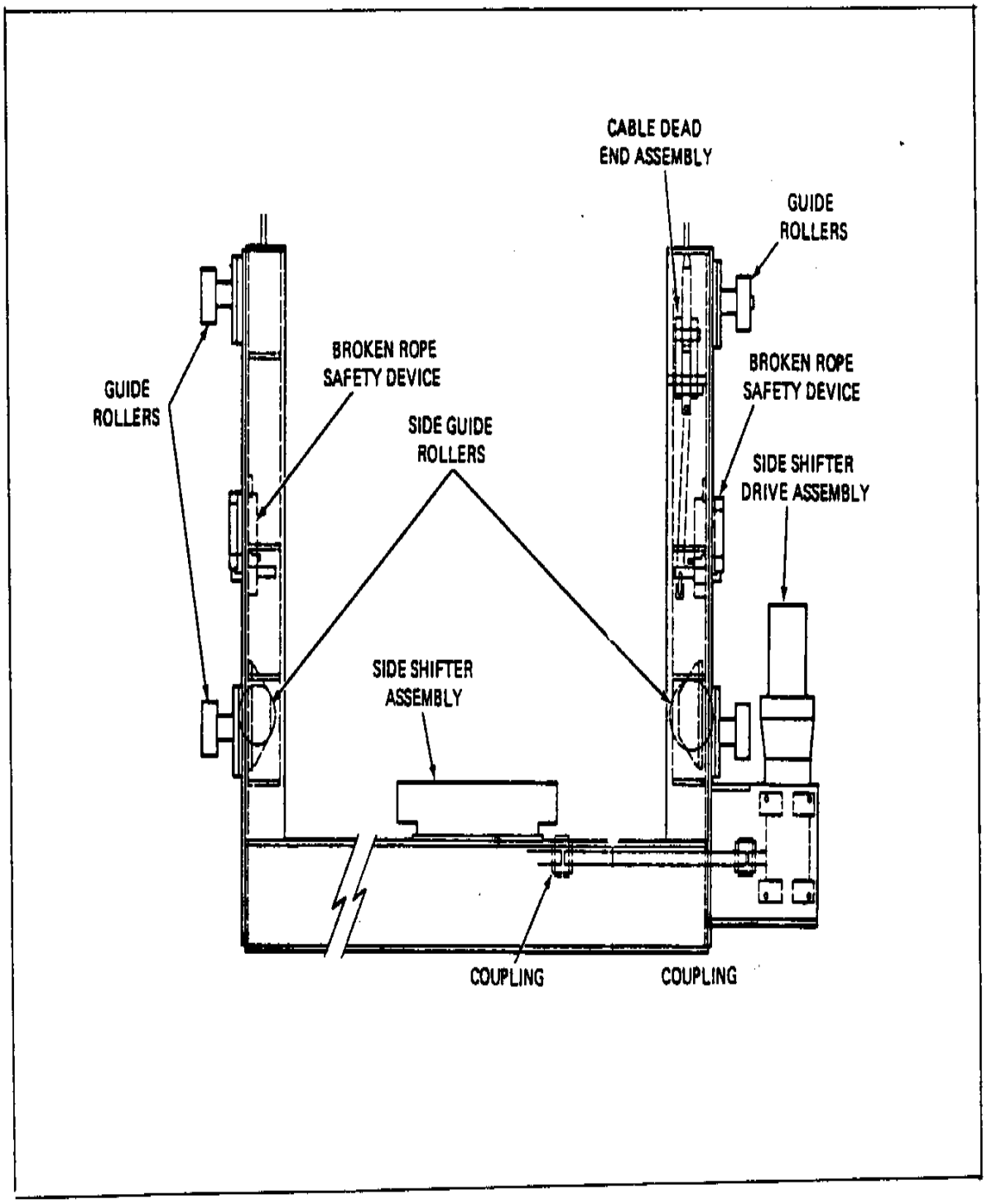

FIGURE 16-12
Typical Carriage Assembly

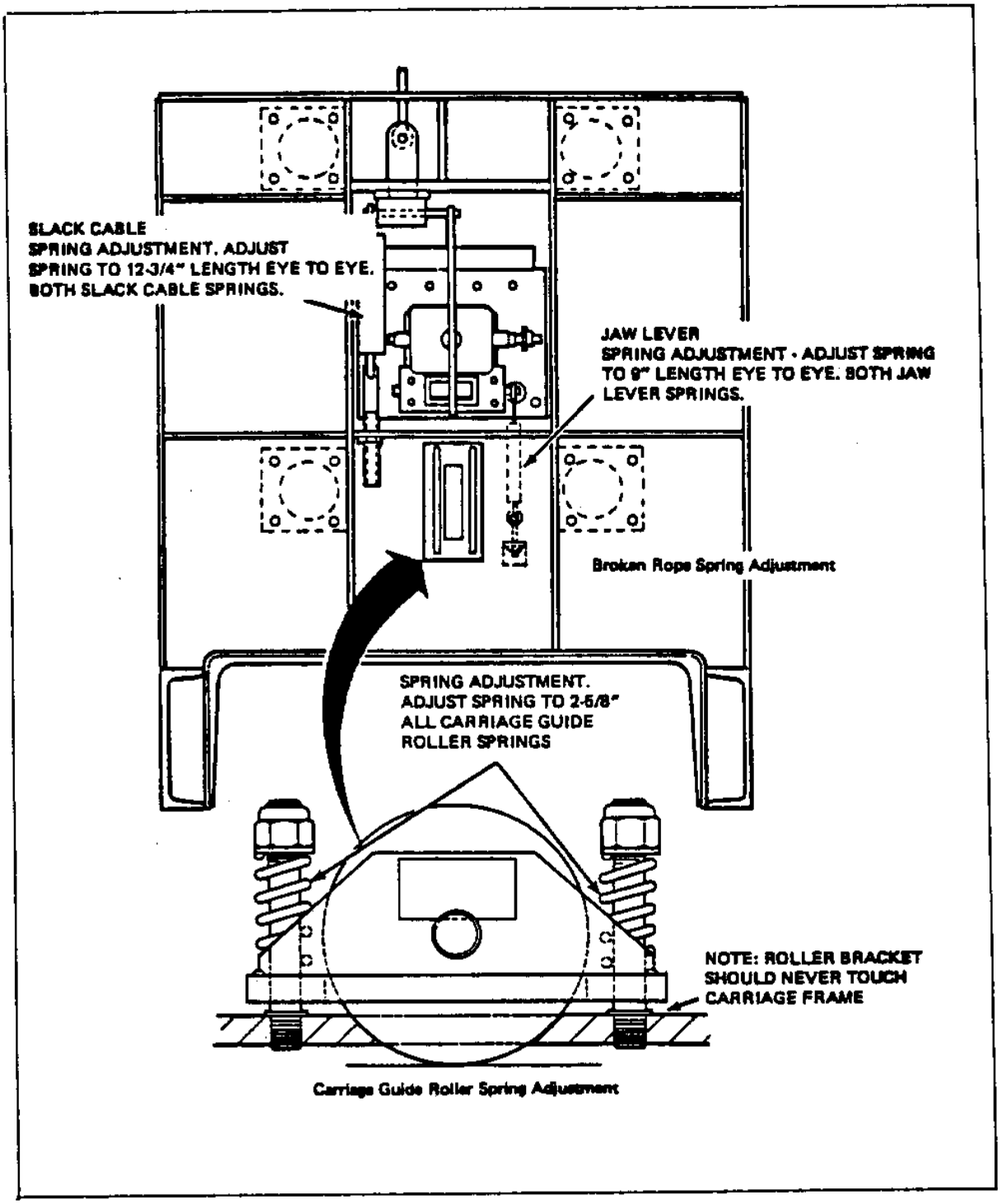

FIGURE 16-13
Carriage Spring Adjustment

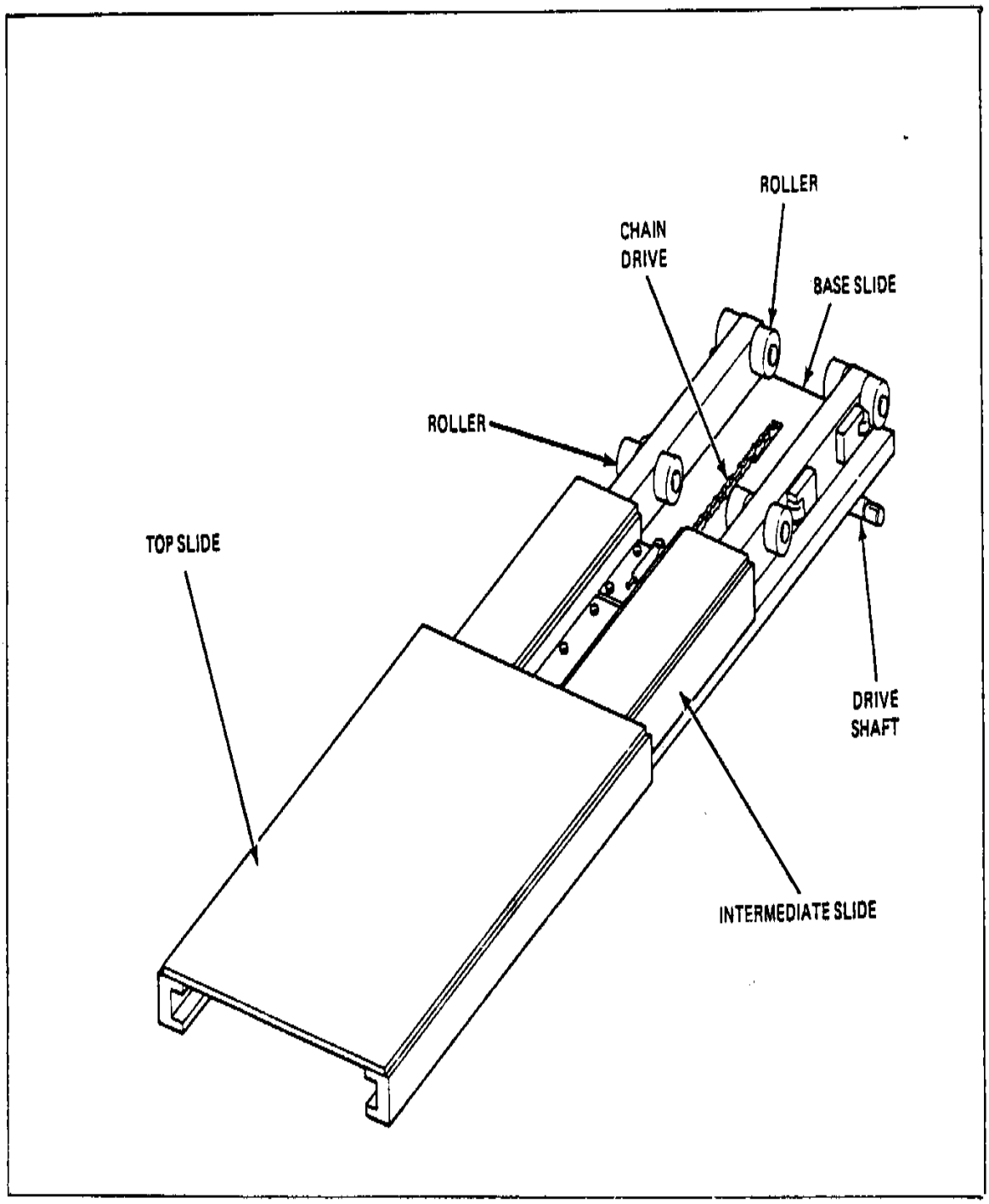

FIBURE 16-14
Typical Side Shifter Assembly

Check the unit when retracted and fully extended for misalignment and looseness. Either condition will cause rapid wear and should be corrected immediately.

16.6.5 Adjustments

16.6.5.1 Linear Movement. Check the linear play. Linear play is the amount the top slide is able to move freely, forward and back. This play must be kept to a minimum of approximately 3/8" or less.

16.6.5.2 Lateral Movement. Check the lateral play. The travel of each component within the assembly must be parallel to within 0.005". The running parallelism of all components must be maintained. One component operating just slightly out of line will put undo stress on the complete system, greatly increasing wear.

16.6.5.3 Shifter Chain. Check the shifter chain. (See Figure 16-15). If the shuttle operation appears sloppy, the drive chain springs and the intermediate chain clacks should be checked. The drive chain should be adjusted to all (+/-) 1/16" play. Each of the intermediate chains should be kept taut, allowing for the (+/-) 1/8" play with the shuttle in the extended position.

16.6.6 Shifter Drive

16.6.6.1 General. The shifter drive consists of a DC permanent magnet motor, a disc type brake and a worm reducer. The complete assembly mounts on the carriage assembly.

16.6.6.2 Motor. Check the motor bearings for proper lubrication and vibration due to wear. Check the interior of the motor for a build-up of dust or other foreign matter. Examine the brushes for replacement and proper contact and the commutator for excessive wear and cleanliness.

16.6.6.3 Brake. Check the brake for evidence of mechanical failures, misalignment or other defects.

16.6.6.4 Couplings. Check the couplings for tightness and proper contact.

16.6.6.5 Limit Switches. Check the side shifter limit switches.

16.6.6.6 Traveling Cables. Check the travel cables for proper fastening, twists or kinks, damage due to chafing, intertwining, and clearance from hoistway equipment.

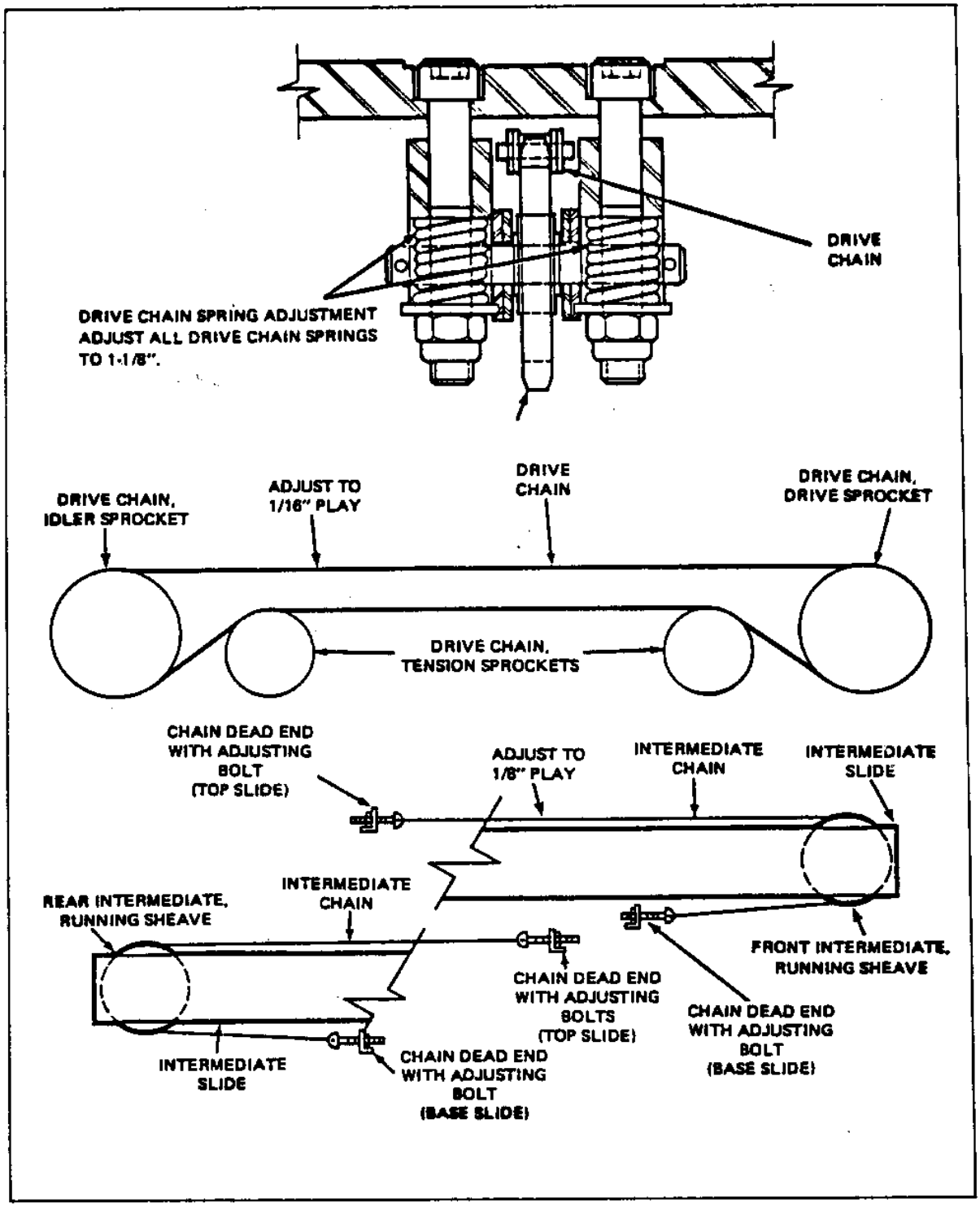

FIGURE 16-15
Shifter Chain Adjustments

16.6.7 Scanning System

Banner modulated "LED" scanners are used for both the carriage and aisle address systems. (See Figures 16-16 and 16-17). Position is sensed as the crane or carriage passes each rack position. The information revealed by the sensors is relayed to the control panel indicator lights. The lens of each unit should be free of dirt or dust. The frequency of cleaning required will be determined by the conditions in the area the crane operates.

16.7 INSPECTION OF THE UPPER END TIE

16.7.1 Upper Guide Rollers

Inspect the upper guide rollers. (See Figure 16-18). The upper guide rollers guide the top end of the crane along a rail that is usually suspended from the top of the storage rack. They serve only to guide the crane. They are not load carrying devices. Inspect the guide rollers for cracks or chipping. Examine the rollers for flat spots and any unusual wear patterns or markings. Also check the roller bearings for adequate lubrication and excessive float. If any of the above conditions exist, the rollers must be repaired or replaced.

16.7.2 Sheave Assemblies

Inspect the sheave assemblies. (See Figure 16-19). The sheave assemblies are mounted in the upper end tie. The purpose of the sheaves is to provide a means through which to reeve the hoist rope from the hoist drums to the carriage. The rope should ride over the sheave wheel, which is free to rotate as the rope is played out and retrieved. Inspect the bearings for damage, excessive wear or looseness. Examine the sheave wheel for excessive or uneven wear in the cable groove.

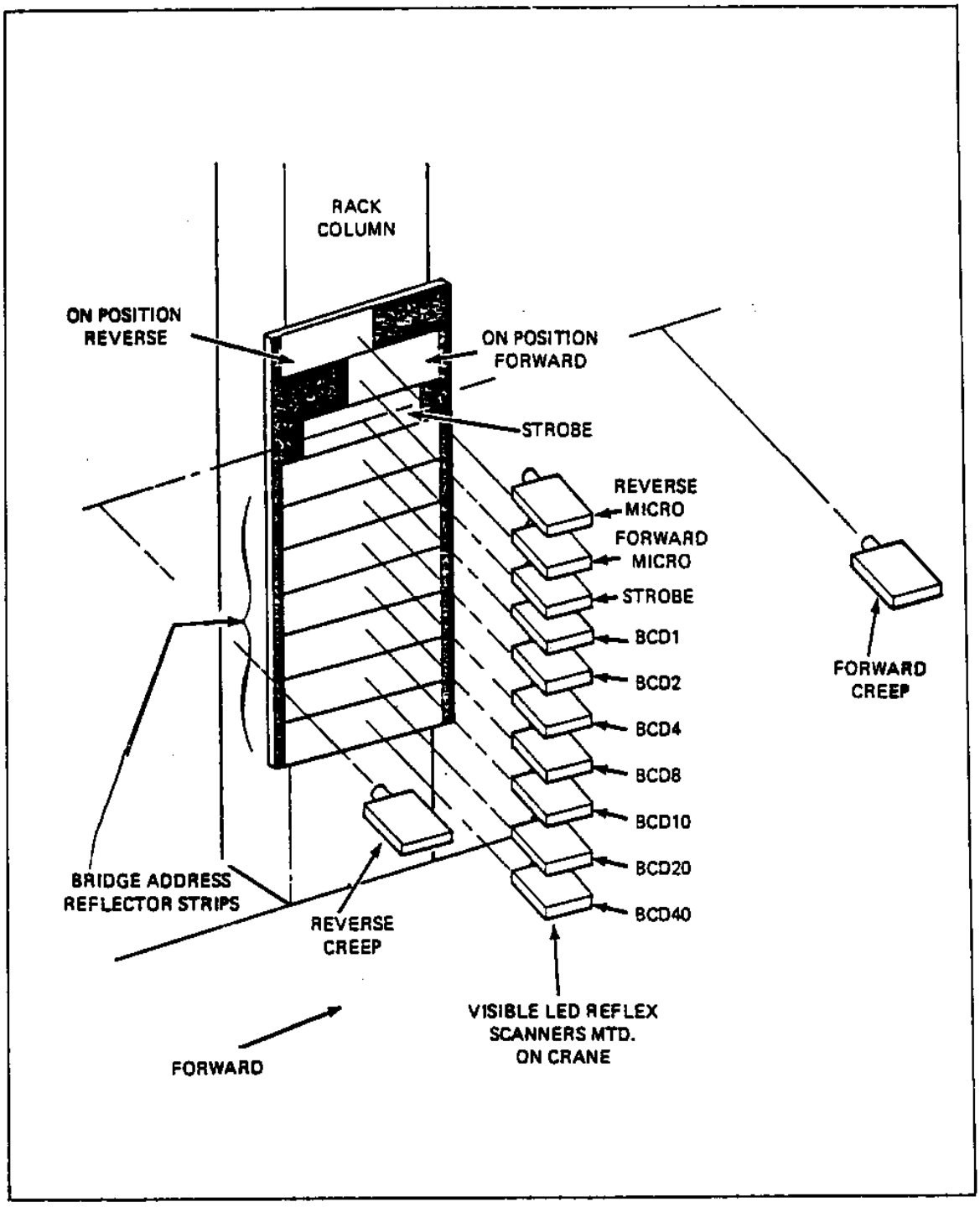

FIGURE 16-16
Typical Bridge Addressing System

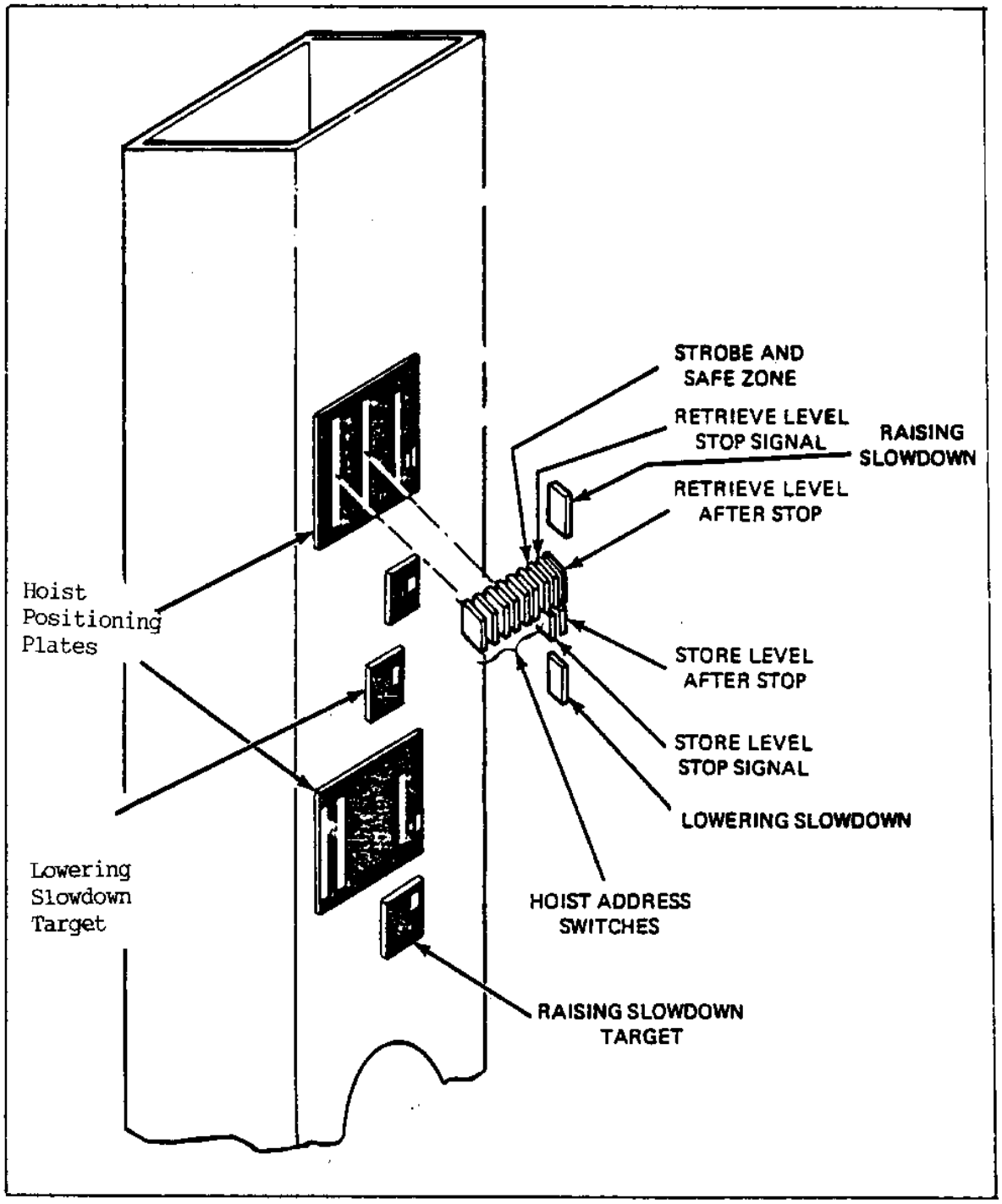

FIGURE 16-17
Typical Hoist Addressing System

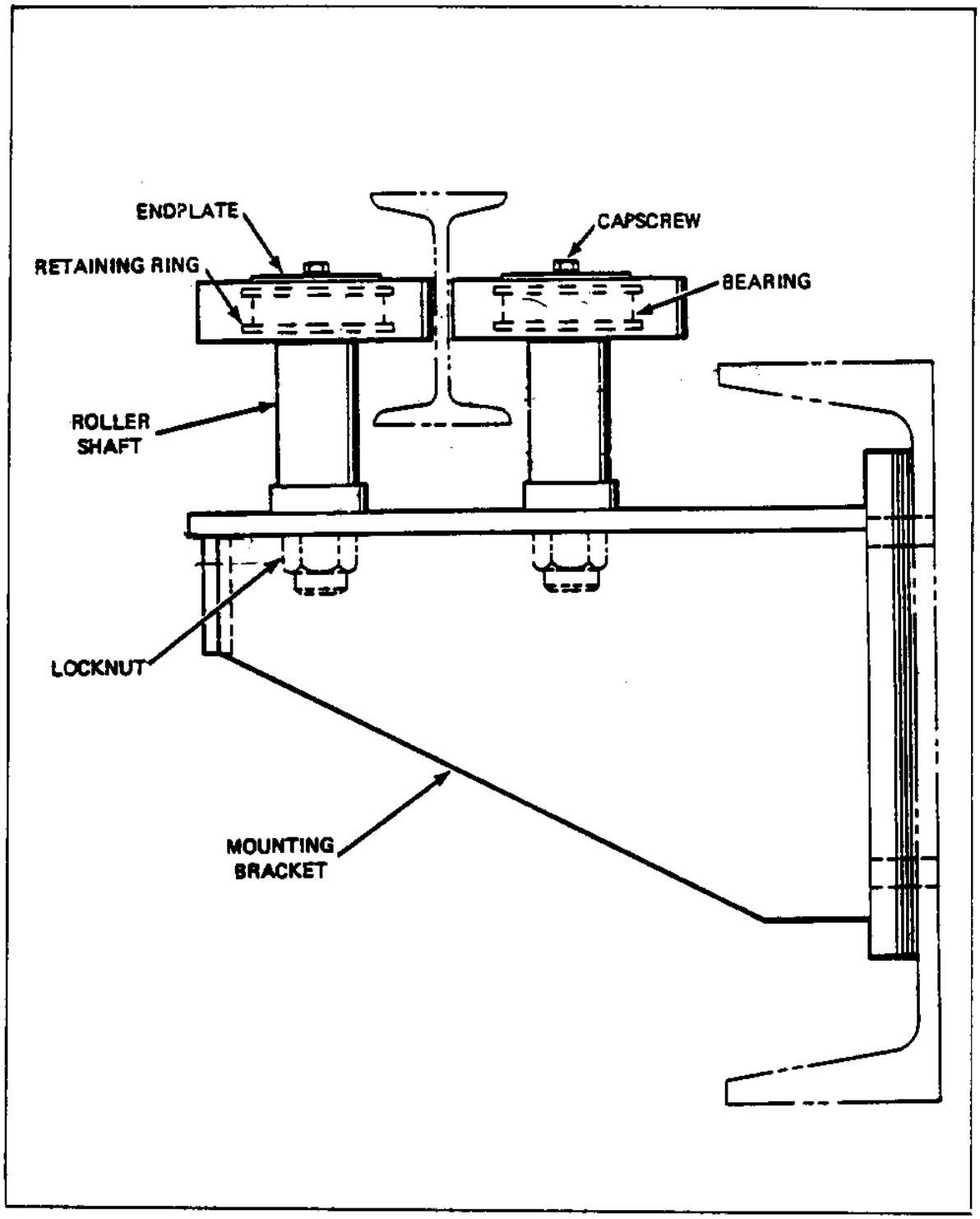

FIGURE 16-18
Upper Guide Roller Assembly

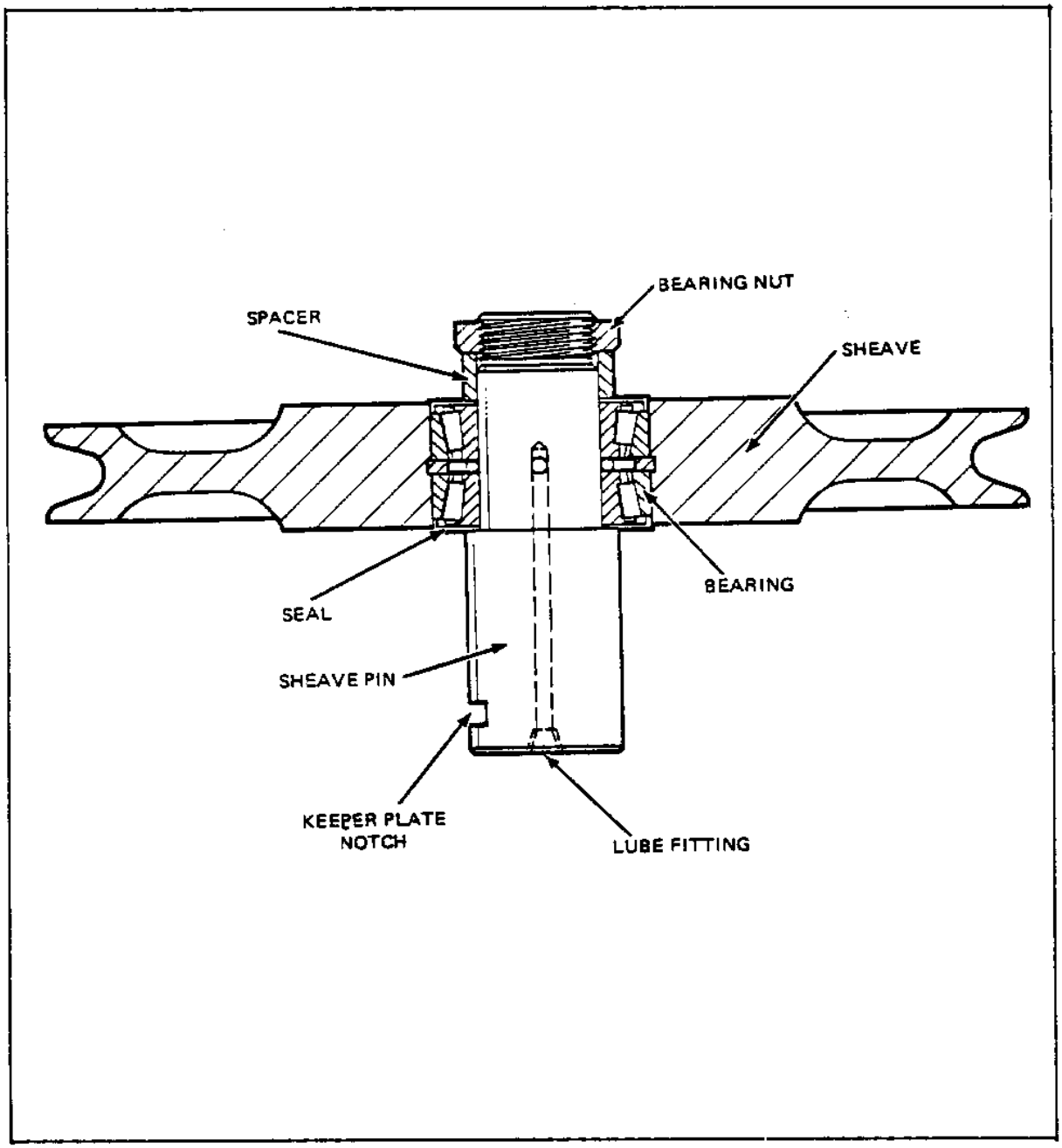

FIGURE 16-19
Upper Sheave Assembly

CHAPTER 17

BOX CONVEYORS

17.1 INTRODUCTION

NOTE: Paragraphs identified with a vertical. line in the left margin are inspections that should be made by Certified Vertical Transportation Equipment Inspectors only.

17.1.1 Scope

The inspection of box conveyors included in this chapter is not only an inspection of all safety related functions, but puts heavy emphasis on an inspection to determine the condition of the equipment and identify areas that need improvement. Proper maintenance is needed to keep the conveying systems operating in an efficient manner. When preventive maintenance is lacking, shutdowns will occur. The design and application of these devices give the user only limited access to the operating equipment. Therefore, user safety considerations are quite limited. This chapter will identify these safety items, as well as performance considerations. See Figures 17-1 and 17-2, which show various box conveyor arrangements with component names that will be used in this chapter.

17.1.2 Use

Box Conveyors are generally used to transport small loads (20 pounds or less) from place to place in either a vertical or horizontal direction. The systems can be as simple as two stations or as complex as several hundred interconnected stations. The devices are found in a number of hospitals and in some office buildings. They carry a variety of items such as supplies, mail, records, drugs, etc. There are two basic types of box conveyors that will be discussed in this chapter. Because of the major difference between the two, we will address the inspection of each separately.

17.1.3 Applicable Safety Standards

There is no safety standard written specifically for this type of equipment. Section 5, GENERAL SAFETY STANDARDS ANSI/ASME B20.1 Safety Standards for Conveyors and Related Equipment, could be used as guidance for the mechanical aspects, while NFPA 101-Life Safety Code is used for building penetration requirements. These devices can penetrate horizontally as well as vertically.

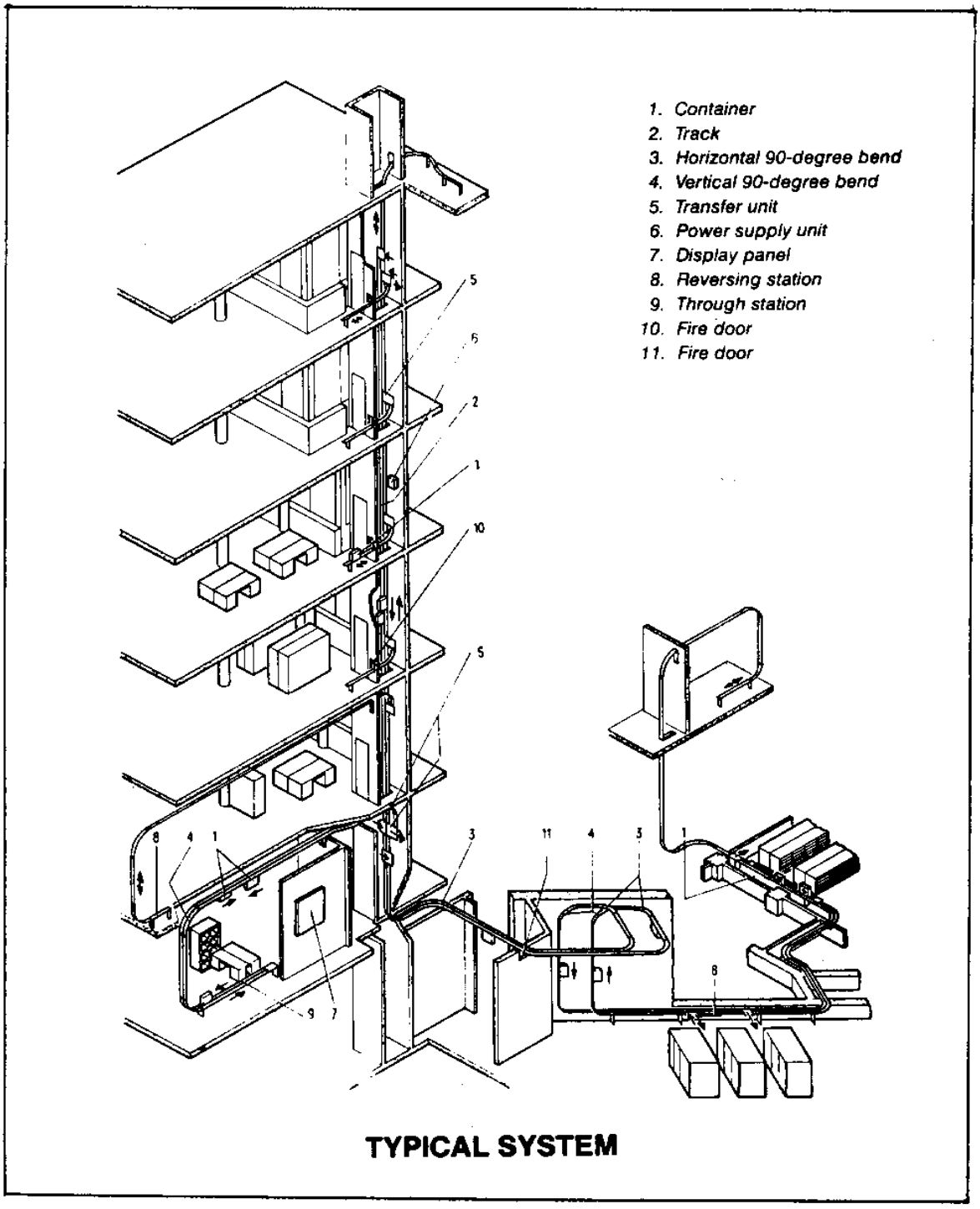

FIGURE 17-1
Typical Self-Propelled Type Box Conveyor

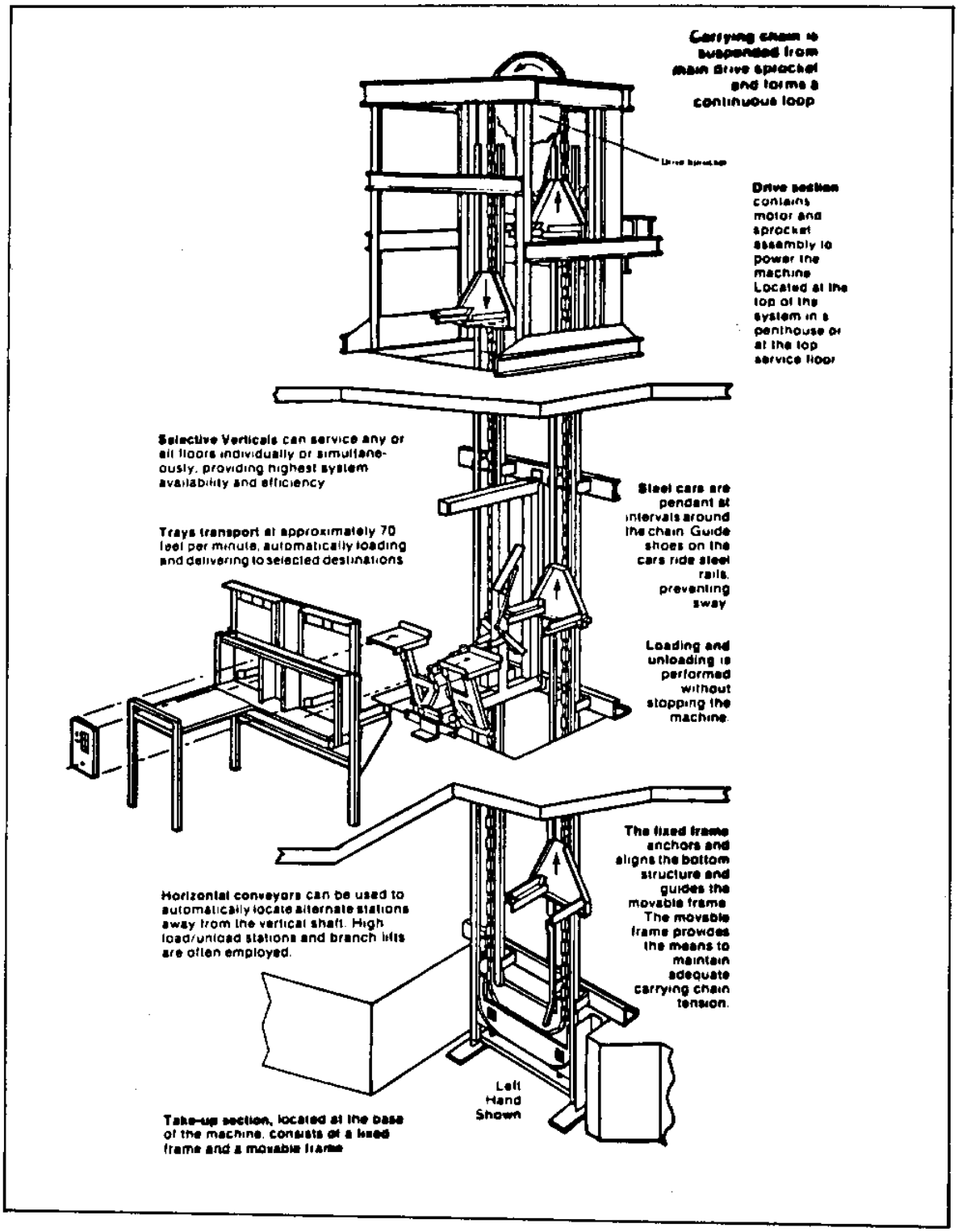

FIGURE 17-2
Typical Selective Vertical Type Box Conveyor

17.1.4 Inspection Interval

The inspection interval should be determined by the application of the equipment and the environment in which it works. Inspections of self propelled box conveyors may be needed more often because of the complexity of the system, while the selective vertical conveyor is more rugged and less complex in design. Neither type unit should be inspected at less than 6 month intervals.

17.2 INSPECTION OF SELF-PROPELLED BOX CONVEYOR

17.2.1 General Description

The self propelled box conveyor system is made up of an assortment of various parts that are assembled to suit a specific application. The system could be as simple as the type shown in Figure 17-3 or more complex as that shown in Figure 17-1. The carriers are independently powered modules that move from a point to a selected destination by way of a track system. It is capable of moving in both a horizontal and vertical direction. The module is powered by a series of bus rails that are located in the track. The system is operated by establishing a destination on the module and giving it a start signal. The module will proceed into the track system. At various discussion points along the way, the destination is automatically read and the track path is adjusted accordingly until the module arrives at its destination. There are several manufacturers of this type of equipment. The basic concept is the same. However each manufacturer has a different approach to accomplishing the result. We will try to show the various designs as we proceed. Because there is no one standard system design, we will address our inspection to the various components. The inspector will have to tailor his/her inspection procedure to suite the specific system he/she is inspecting.

17.2.2 Track

17.2.2.1 Design. The system uses modular, extruded aluminum track sections. Two of the track power rails provide 24 volt D.C. power to the module motors, while the third rail feeds control logic commands. Horizontal car movement relies on friction drive, while vertical movement engages gearing between the track and the module. Figure 17-4 show three basic track designs used today.

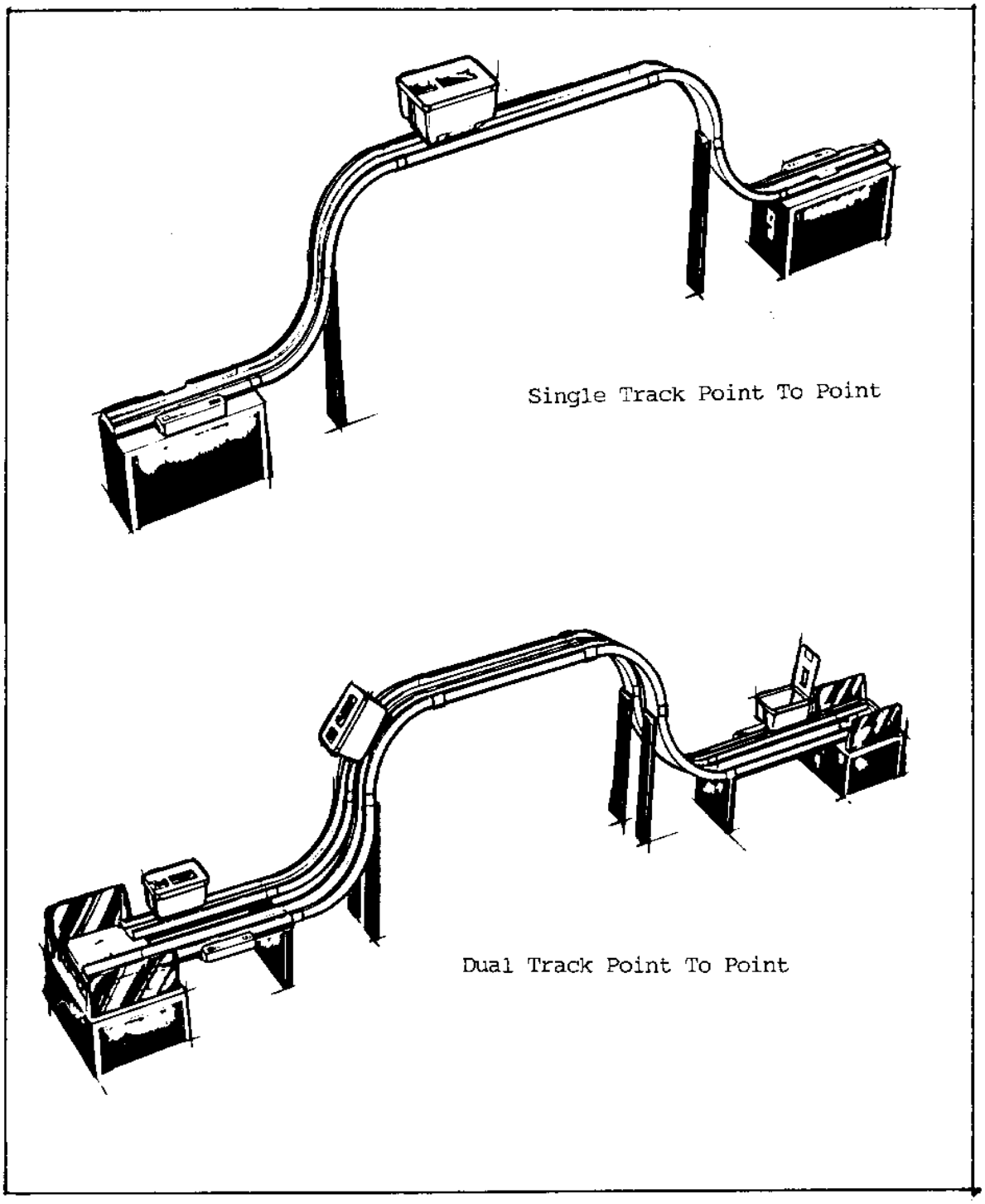

Figure 17-3
Typical Point To Point Self Propelled Box Conveyor System.

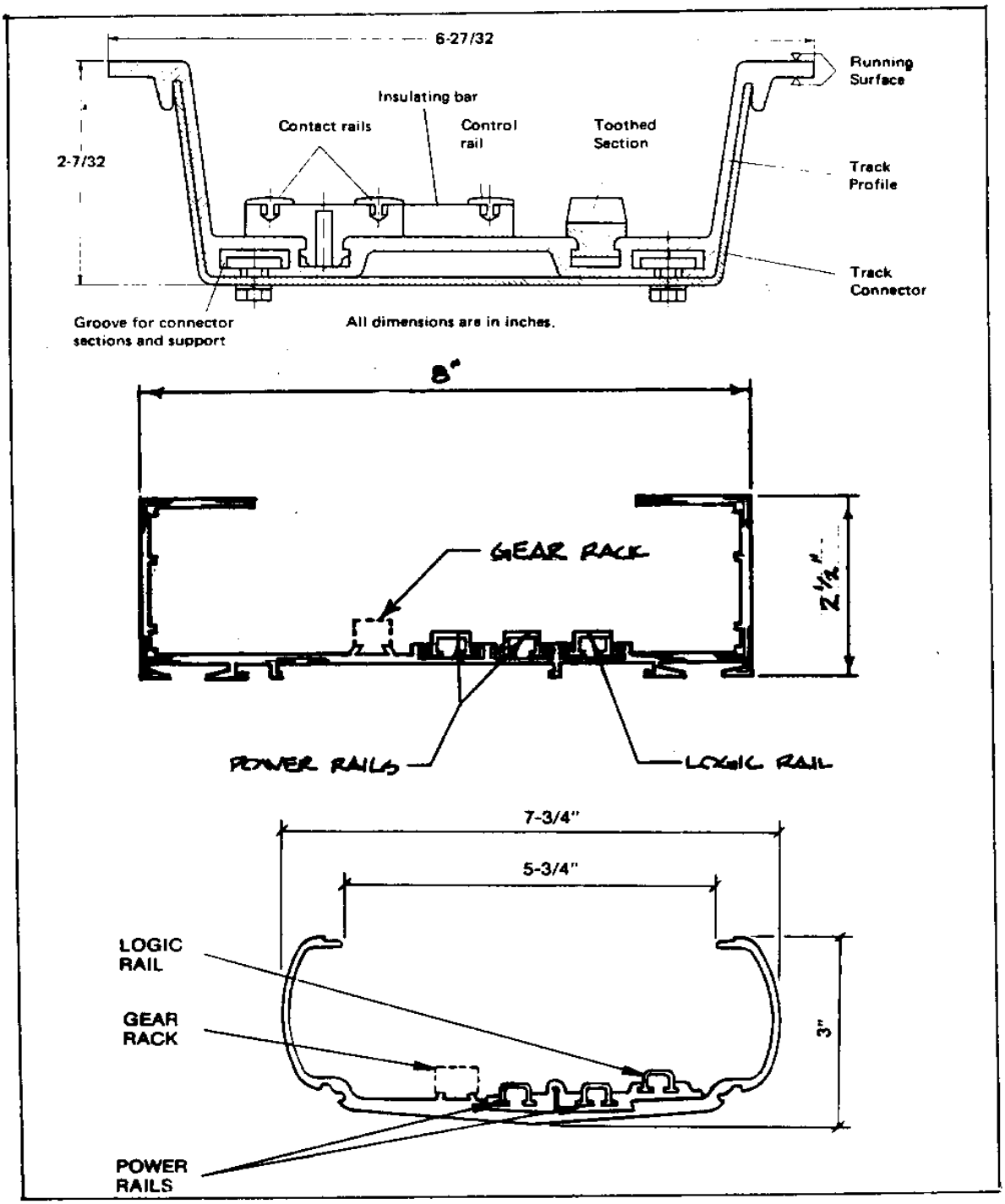

FIGURE 17-4
Typical Conveyor Track

17.2.2.2 Maintenance. Clean track is essential if the system is to be kept operating. The inspector should examine the track to see that housekeeping is being done. He/she should also check the condition of the power and logic rails to see that they are clean and free of oxidation. The track environment should control the frequency and intensity of this examination. Areas subject to dust and dirt should be checked more often than a sterile area. Electrical and mechanical connections should be checked, especially in areas subject to vibration, such as track going into and away from switch track. The gear rack on vertical track should be closely examined. This rack calories the weight of the modules as they move vertically and are subject to wear. It is not necessary to replace the track section if the rack is wearing. The racks are modularly constructed for replacement purposes. Tracks in public areas should be closely examined for sharp edges. They should also be checked for damage. Any piece of equipment that is exposed to people is subject to damage.

17.2.3 Switches

Because of the mechanical movement, switches sustain the most wear of any part in the system. The inspector should closely examine them for wear and ascertain that proper types and amounts of lubrication are being used. Any wear should be noted so that repairs can be made prior to system shutdowns. Associated with the switches are the destination readers. Since switches are decision points, readers are located near the switches to determine the path of the module. Operation of the readers should be checked to assure proper information is received and associated action occurs. Figures 17-5, 17-6 and 17-7 show various switch arrangements that will be encountered. Switches can be located in the horizontal or vertical plane.

17.2.4 Dispatching And Receiving Stations

There are numerous arrangements for dispatching and receiving stations. Figure 17-8 shows several typical arrangements. However, most stations are designed to meet specific applications. Because these areas are accessible to the public, the inspector must pay specific attention to the general hazards such as sharp edges, exposed electrical devices etc., in addition to his system concerns, which include the condition of the track and switching devices. These stations will contain a dispatch or send a control unit. The inspector should mechanically check the pushbutton operation as well as the electrical operation.

Loop Switch.

A loop switch has one tray and two ports: entry and exit. It's located at the end of parallel tracks, horizontal or vertical, to re-route all traffic to the opposite direction.

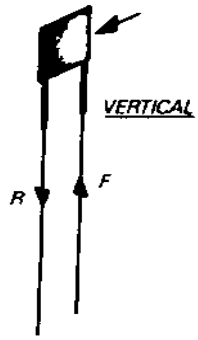

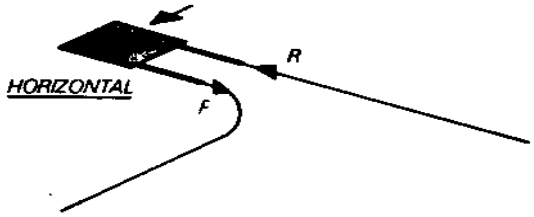

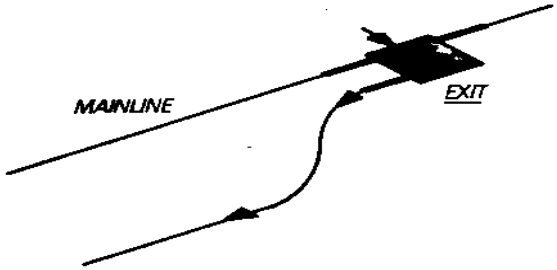

Single Switch.

A single switch has one tray and three ports Types of single switches: *Exit*—Switches vehicles from main track to secondary runs, transfer and thru stations. *Entry*—Switches vehicles to main track from secondary runs, transfer and thru stations. *Re-Entry*—Combines entry/exit functions for a single-track re-entry station. *Loop and Re-Entry*—Combines loop and re-entry functions at a terminal re-entry station.

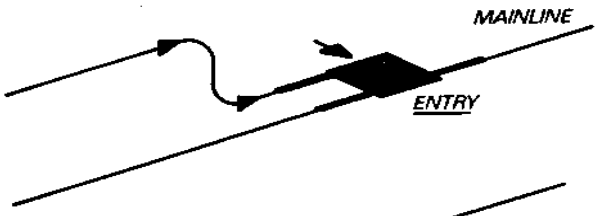

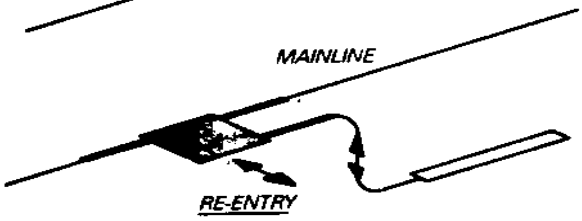

FIGURE 17-5
Typical Switches

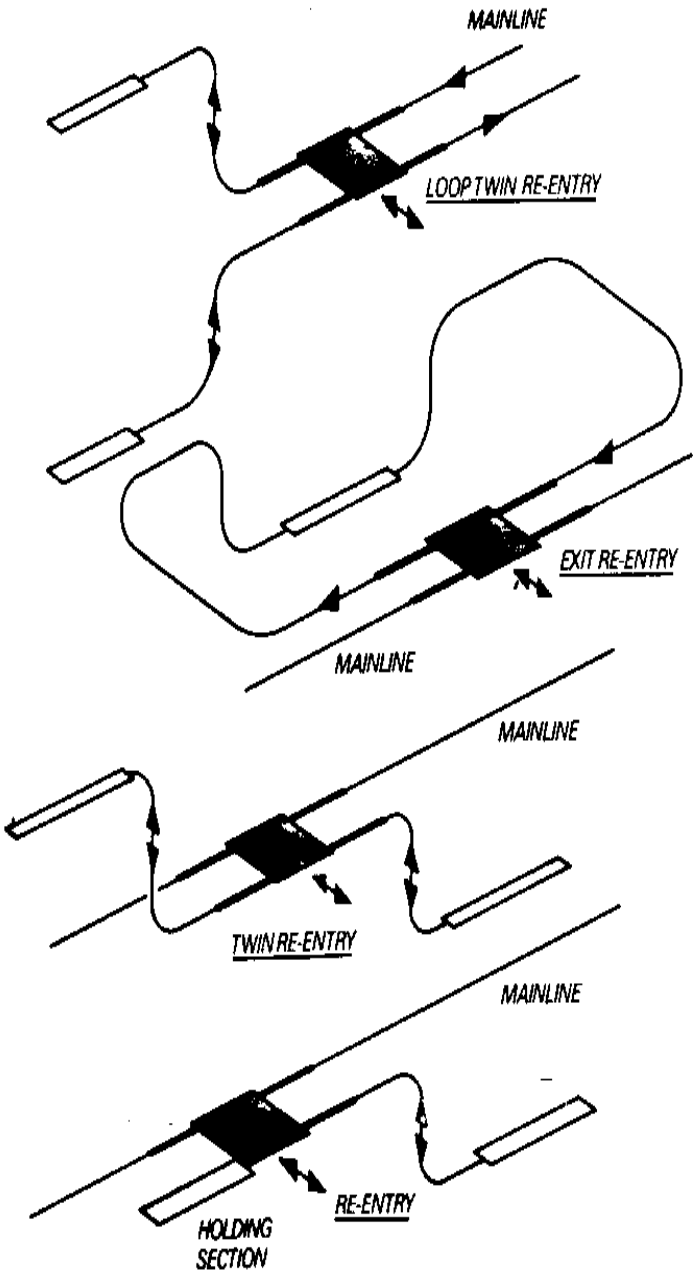

Twin-Function Switch.

A twin-function switch has one tray and four ports. It combines the functions of two single switches in configurations such as exit/entry, exit/re-entry, twin exit, twin entry, twin re-entry and loop/twin re-entry. *Re-Entry and Hold*—A twin-function switch also transfers vehicles from a main track to a re-entry station track *or* to a holding section if the re-entry station is busy or full.

FIGURE 17-6
Typical Switches

Double Switch.

A double switch has two trays and four ports: two entry, two exit. It functions as a loop switch at any point along parallel tracks, horizontal or vertical. By providing a shortcut between stations, a double switch reduces travel time. Dual-tray design allows through traffic to pass without delay.

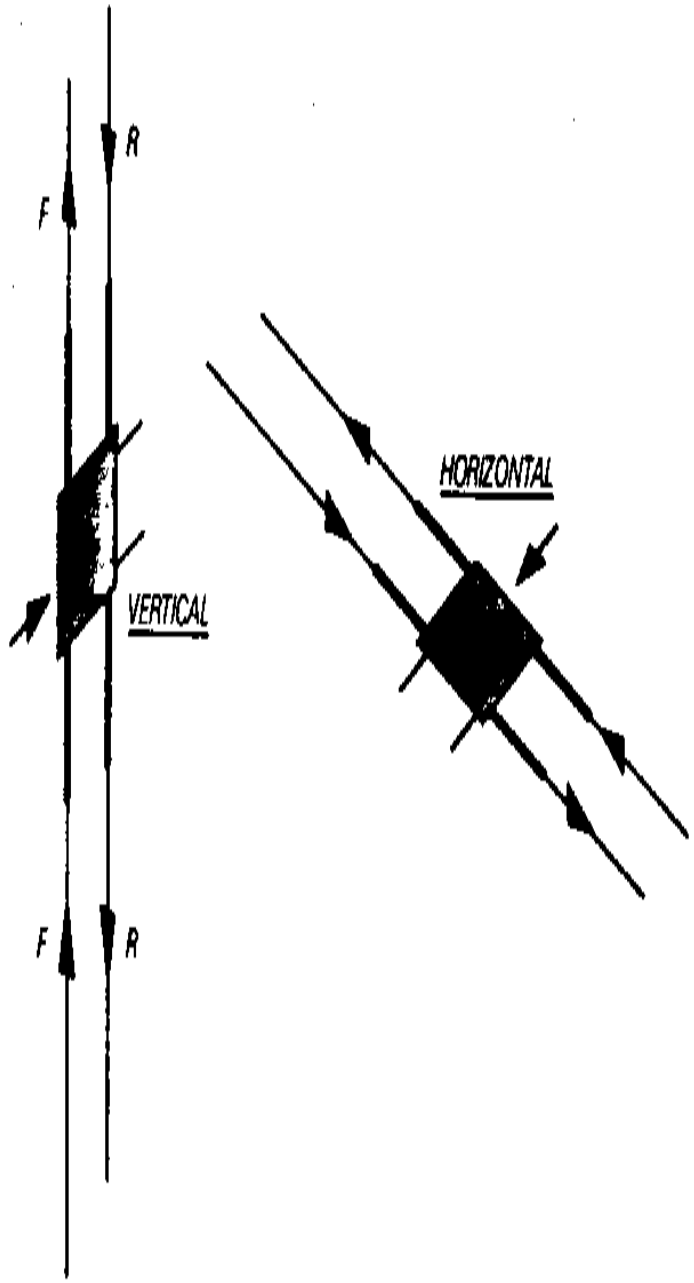

FIGURE 17-7
Typical Switches

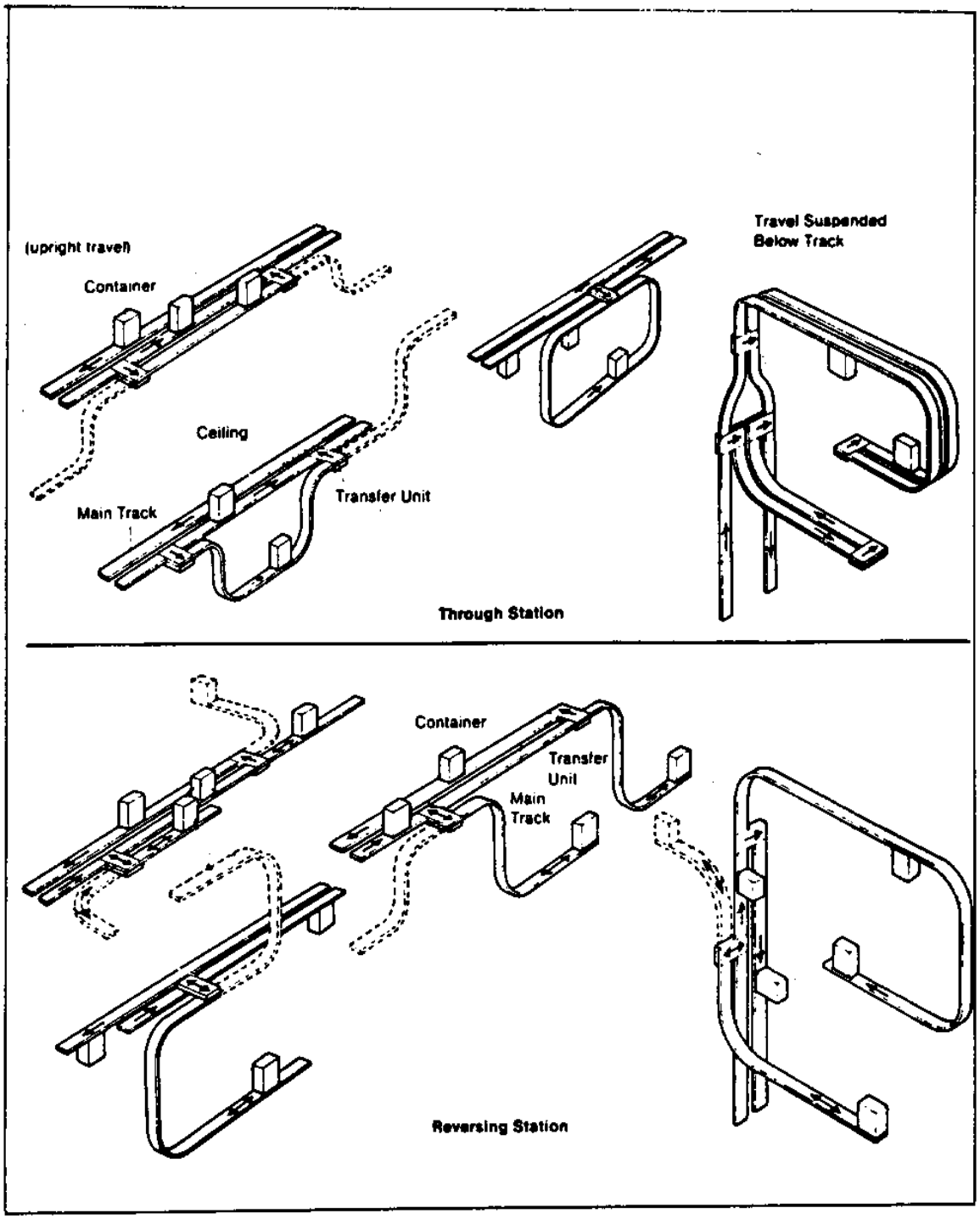

FIGURE 17-8
Typical Dispatch/Receive Stations

17.2.5 Fire Dampers

Building codes require that whenever conveyors pass through walls, floors or ceilings, the fire resistance rating must be maintained. It is therefore necessary that rated fire dampers be incorporated into the conveyor system. Figure 17-9 shows a typical vertical down-close type door. The inspector should examine each damper to be sure it will operate in its intended manner when the need arises. The dampers are usually equipped with 165 degrees F thermal fuse links. However, other devices, such as the electromagnetic holder with an overriding 175 degree F thermal release switch or a motor operated holder with thermal override switch may also be found. The vertical down-close door is closed by gravity. They are the type most used. However, vertical up-close and horizontal movement dampers are available. They are operated by a constant force steel spring. Latches are required to retain the up-close damper in the closed position. Close attention should be given to the guiding tracks, springs and latches. Dirt can easily accumulate in these areas and prevent the damper from closing properly.

17.2.6 Delivery Vehicles

There are a number of different sizes and shapes of delivery vehicles. Each manufacturer offers a variety to choose from dependent upon the user's need. However, once a system is installed, a particular container changing to another shape may not be possible because of operating clearances. Figure 17-10 shows a composite of various manufacturer's vehicles. Figure 17-11 shows two of the more popular types of delivery vehicles and points out some of the major components. Each vehicle contains a 24 volt D.C. motor which is used to power the vehicle. Power is obtained from the stationary rail by way of collector brushes. The units are gear driven. The drive system turns both a friction drive wheel and gear wheel. The friction wheel propels the module along the horizontal and the gear wheel moves it in the vertical direction using the gear rack mounted in the vertical stationary rail. Figure 17-12 shows a cross section of the rail and module. The type shown uses an upper and lower wheel arrangement to retain the vehicle on the track, while other manufacturers use a single wheel and form the track around the wheel. Continuous maintenance is required on the vehicle components. The inspector should see that this is being performed. Each vehicle that has been removed from the system reduces efficiency, and vehicles not operating in peak condition can cause shutdowns. Another area to check when examining the modules is the closure handle or catch. If a cover opens during operation, a system shutdown will occur.

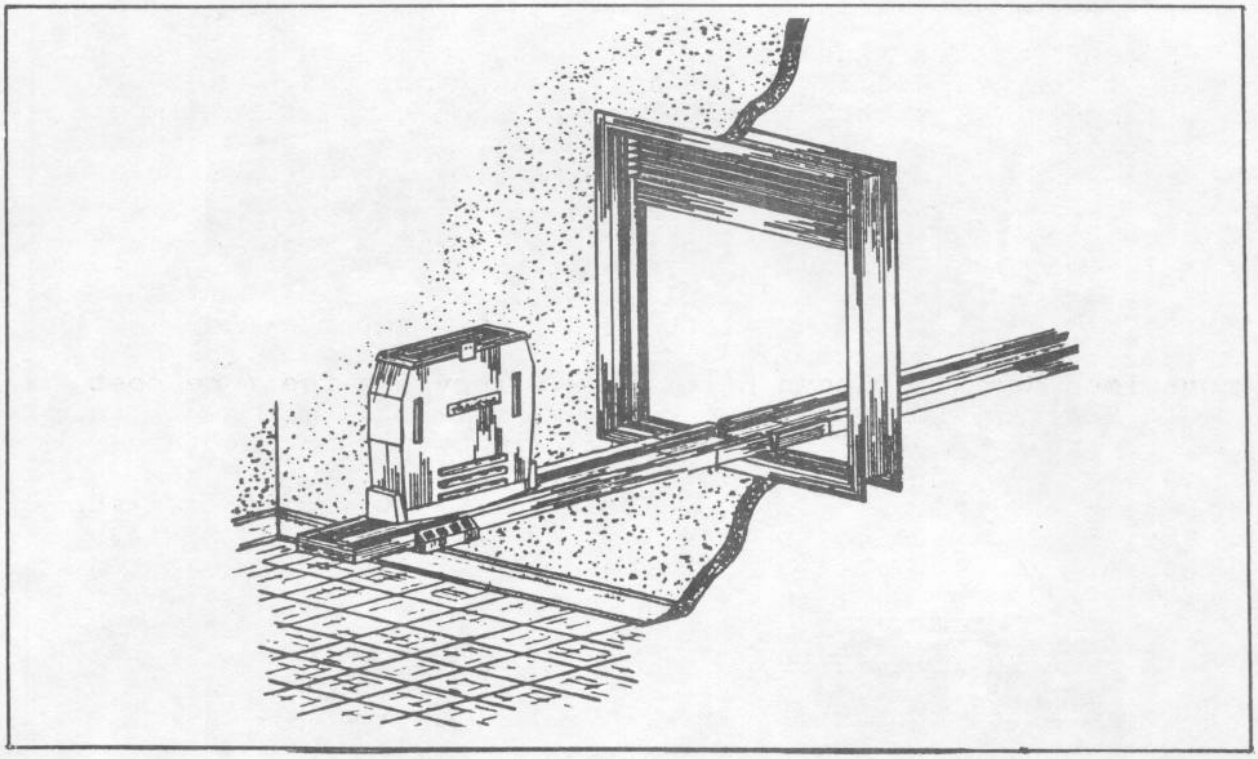

FIGURE 17-9
Typical Vertical Down-Close Fire Damper

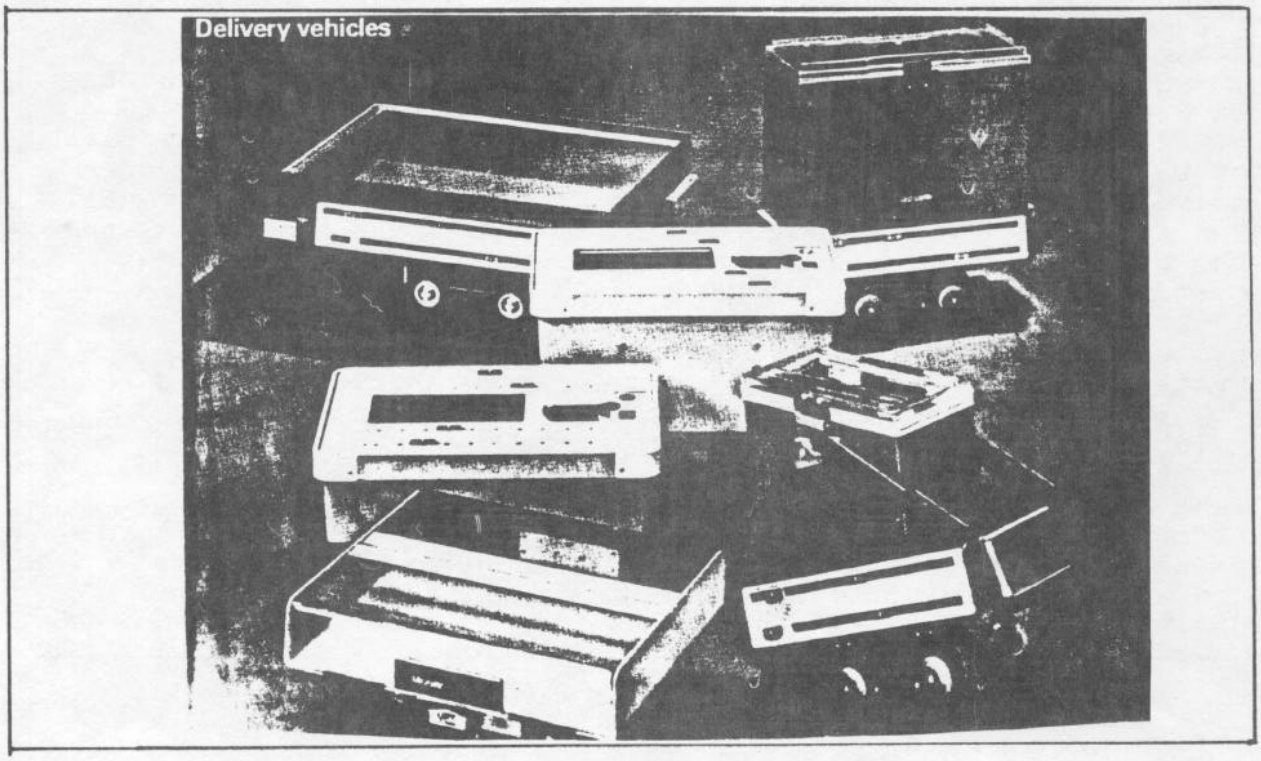

FIGURE 17-10a
Typical Box Conveyor Delivery Vehicles

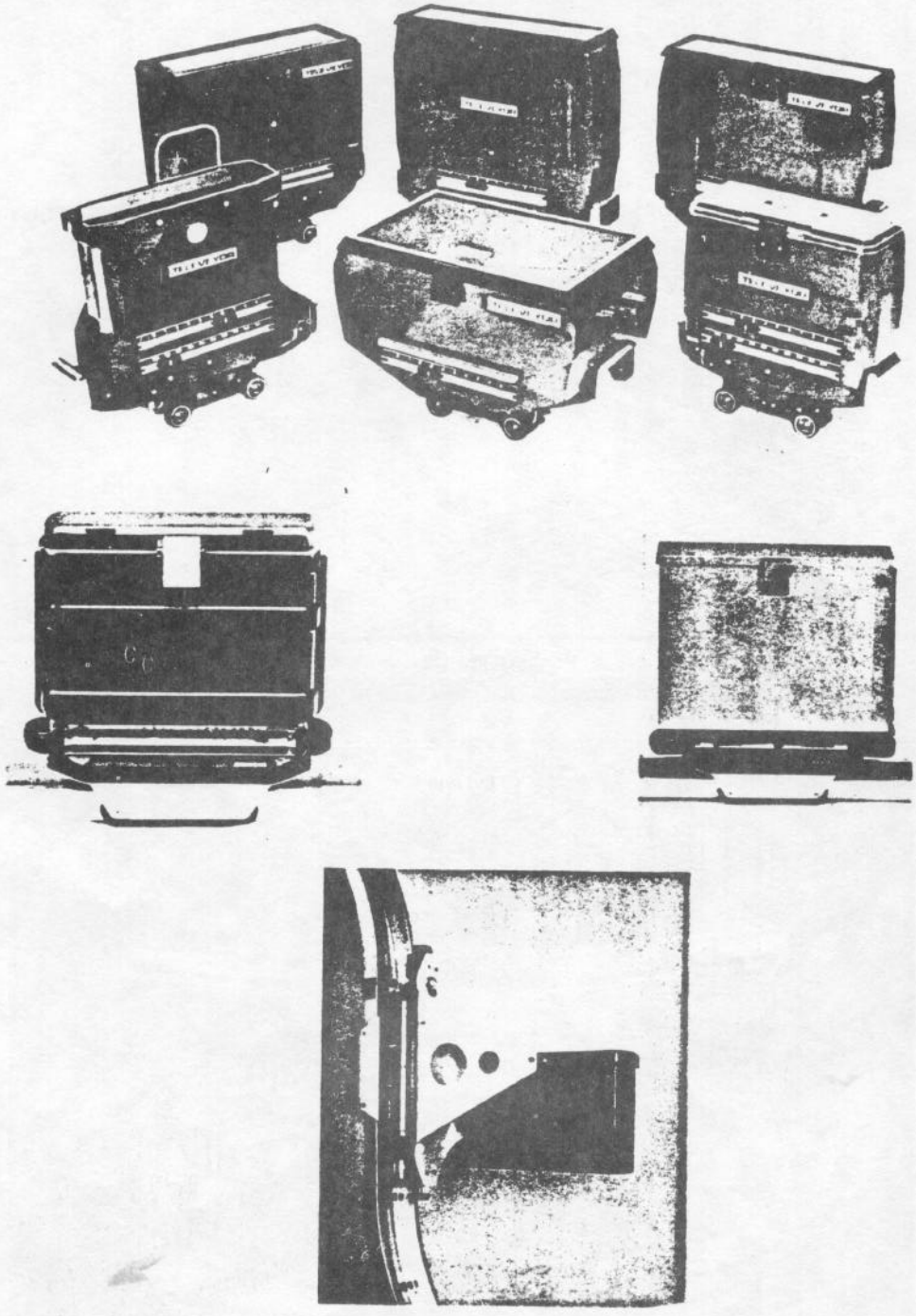

FIGURE 17-10b
Typical Box Conveyor Delivery Vehicles

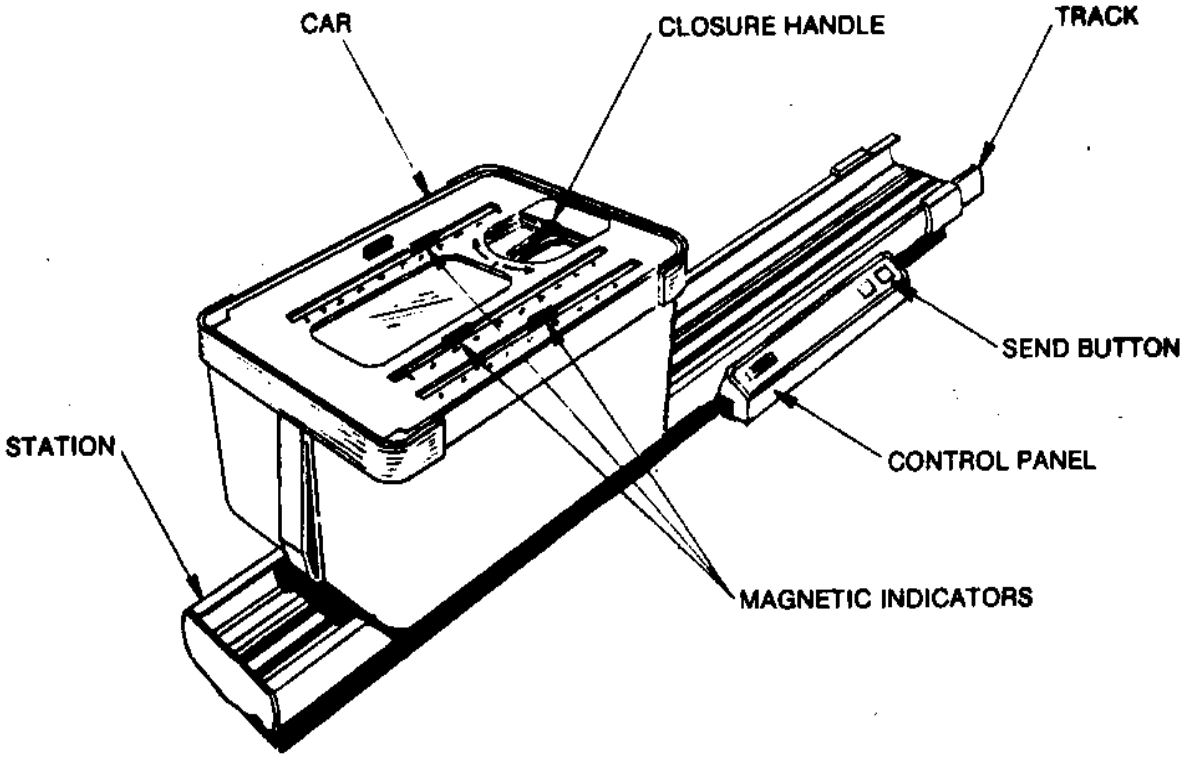

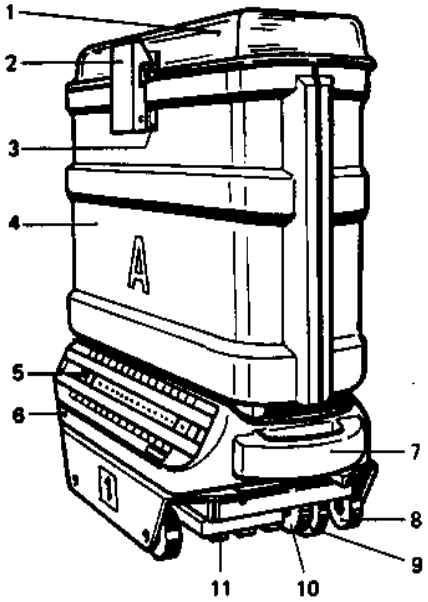

1. Lid
2. Catch
3. Lid interlock
4. Container
5. Address panel
6. Car
7. Bumper (also serves as handle)
8. Guide wheels
9. Friction drive wheel
10. Gear wheel
11. Rail contact

FIGURE 17-11
Description Of Delivery Vehicle

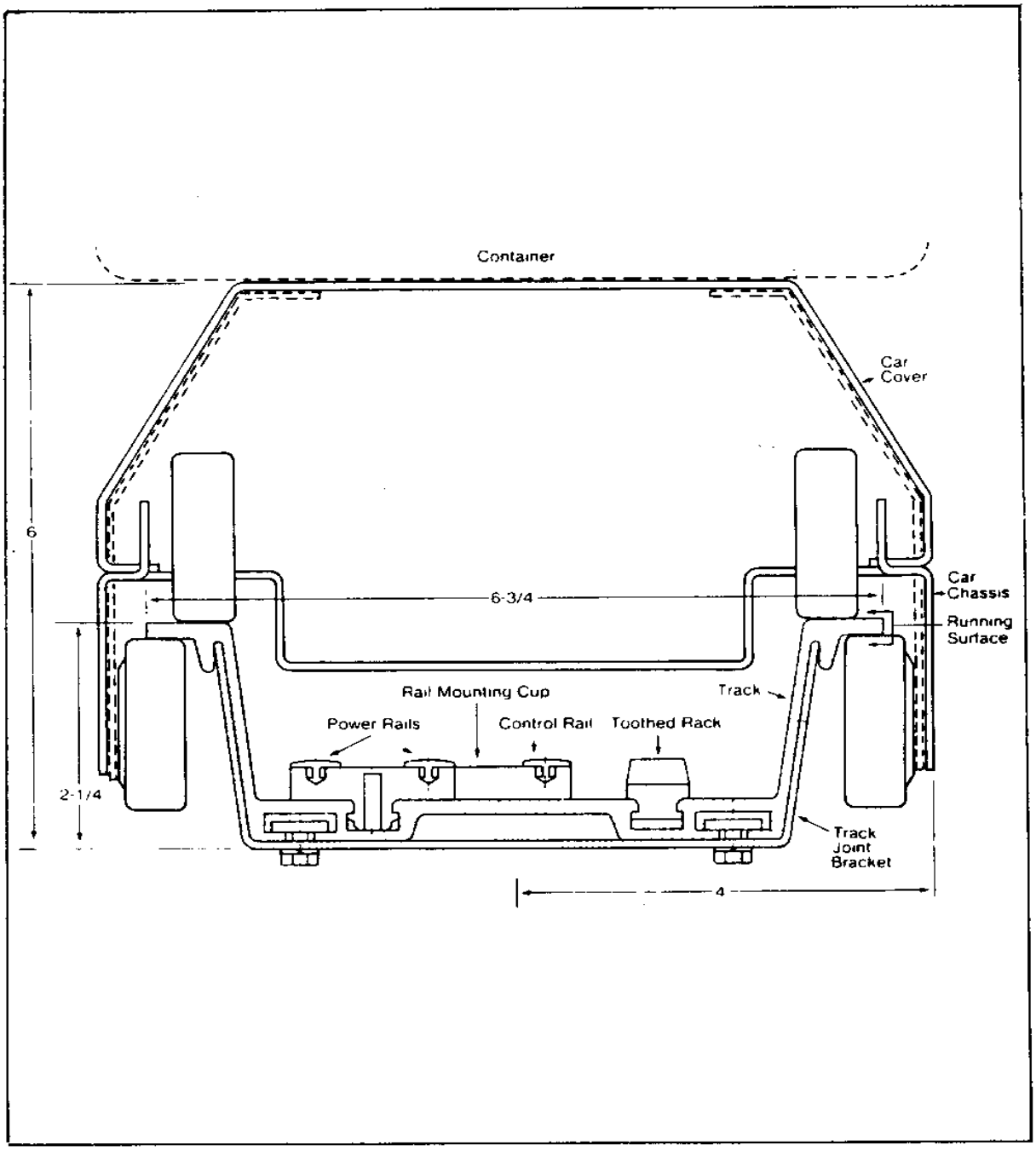

FIGURE 17-12
Car Mounted On Track

17.2.7 System Operation

Usually the inspector will not have to check out the operating system. The user will do that for him/her during the normal course of everyday use. He/she should however, review service records and solicit comments from the user to determine if there have been problems. These specific areas can then be investigated. The inspector should periodically check any stations that are not in heavy use. This should be done in both a receiving and sending situation. Good maintenance care is for the entire system, not just the areas of heavy use.

17.3 INSPECTION OF SELECTIVE VERTICAL BOX CONVEYOR

17.3.1 General Description

The selective vertical box conveyor provides continuous, automatic load and unload capability, transporting containers at speeds of 70 feet per minute. Loading and unloading stations at each floor served provide interselective service between floors. See Figure 17-13 for typical operator view of conveyor with description. The conveyor is a continuous chain with open bottom cars that are equally spaced along the chain. The boxes are loaded on the up side of the chain movement and unloaded on the down side. A container is loaded through the open entrance onto a loading platform. A destination call is registered on the station control panel. As the next open car approaches the entrance, the loading platform extends toward the chain and the car, which straddles the platform and picks up the container. The container will travel to the top of the chain and descend down on the discharge side of the conveyor. When it approaches its destination and the unloading platform is moved into place, the platform will pick up the container and move it to the open unloading entrance. Gravity will cause the container to move off the platform and deposit it on the unloading shelf. Figure 17-14 will diagrammatically show this sequence.

17.3.2 Inspection Made In Overhead Machinery Space

(See Figure 17-15.)

17.3.2.1 Overhead Drive System. The drive mechanism is located at the top of the Selective Vertical Conveyor, mounted in structural steel framework. It is supported by the building structure and equipped with an oiler to lubricate the drive chain. The drive chain is constructed of heat treated steel with pins, bushings and rollers. The chain design safety factor is seven (7) times the maximum carrying load of the application. The chain is suspended in a continuous loop from the main drive sprocket. The inspector should examine the lubrication system to assure proper amounts are being dispensed.

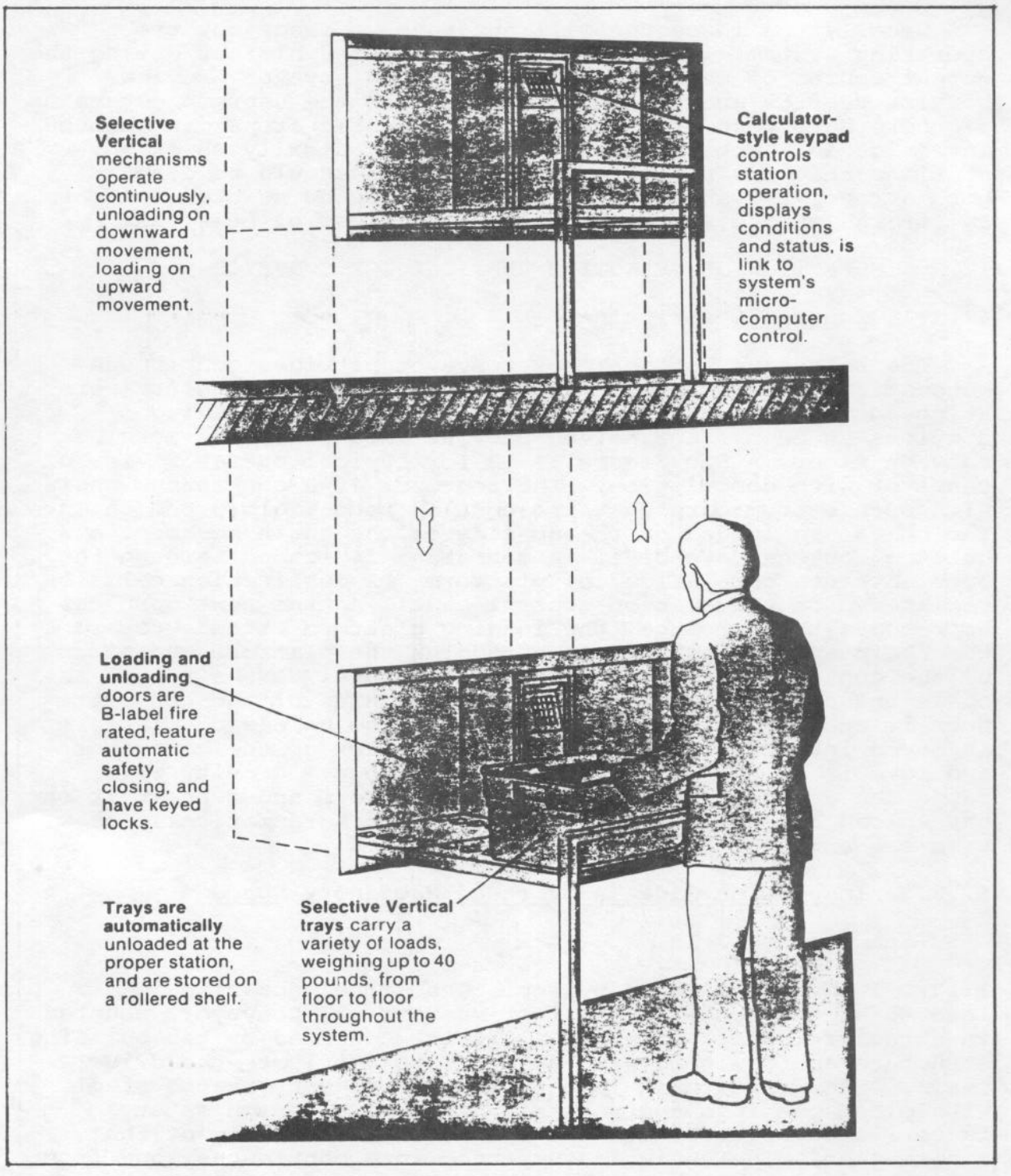

Figure 17-13
Typical Selective Vertical Conveyor
From The Operator's Side

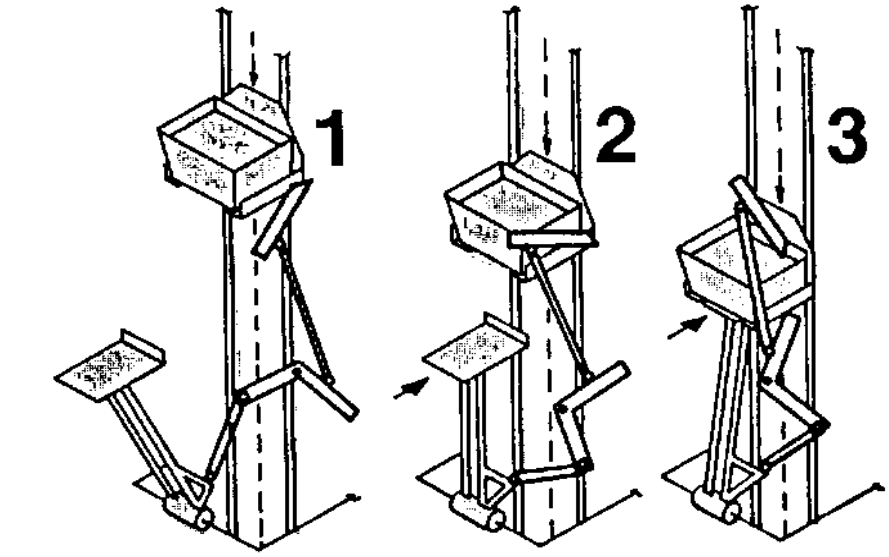

1 - Descending car engages mech. link
2 - Mech link starts unload platform in
3 - Load deposited on platform

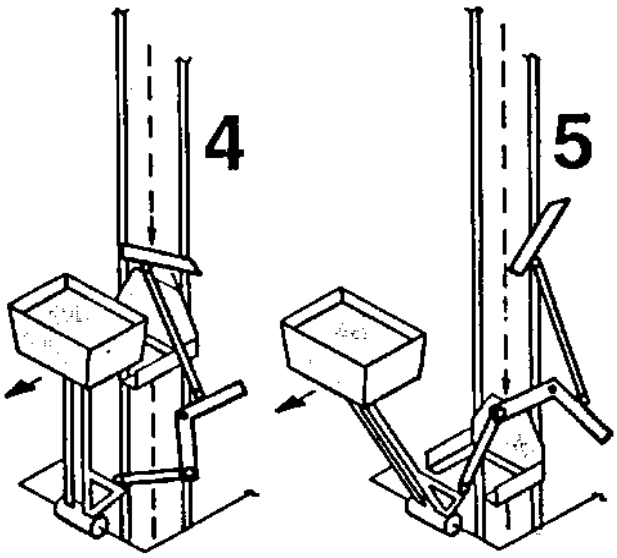

4 — Mech Link starts unload program out
5 — Station ready
Load operation opposite this sequence

FIGURE 17-14
Mechanical Sequence Of Station

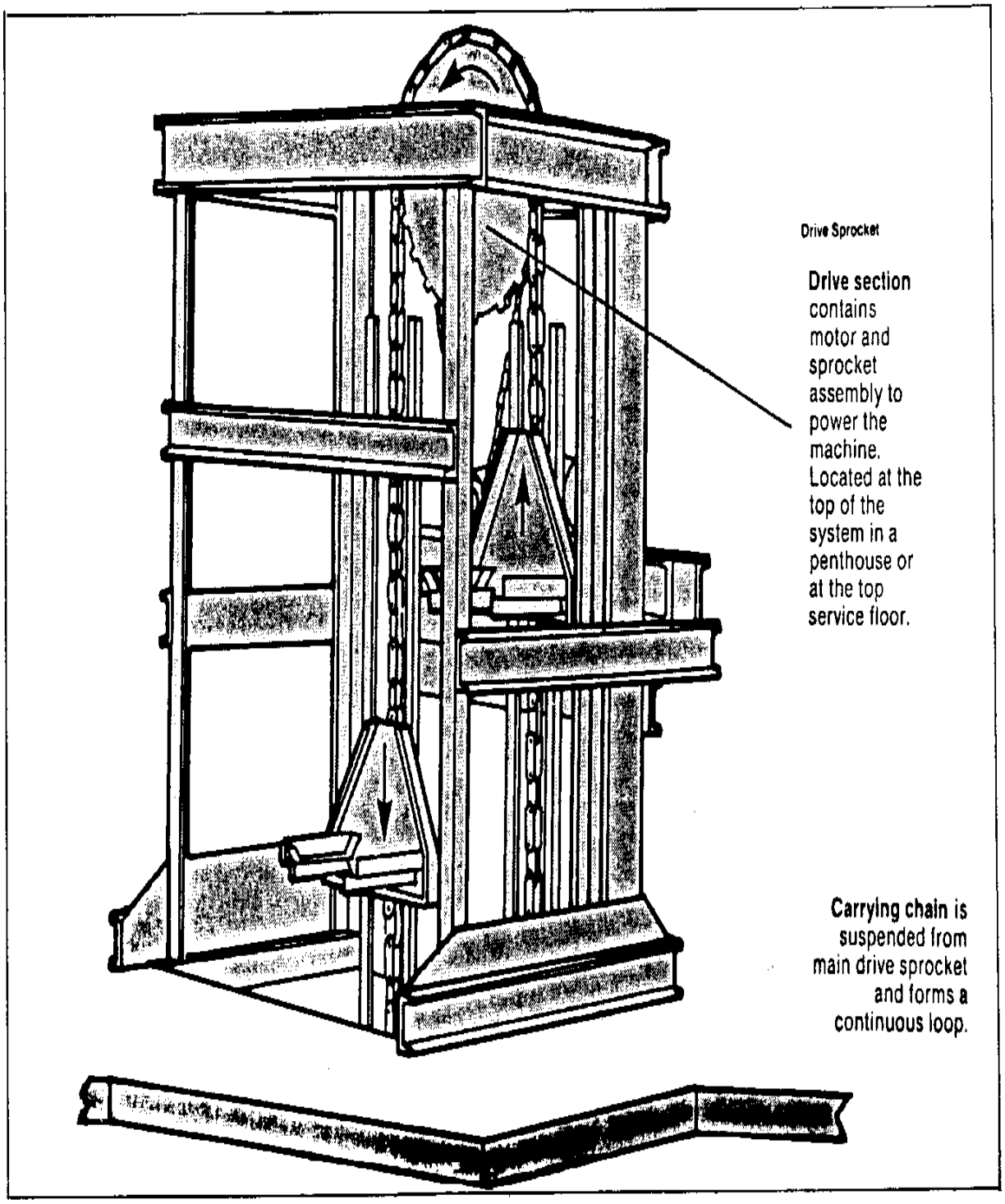

FIGURE 17-15
Typical Overhead Machinery Space

Too much lubrication will result in an increased fire hazard because of the increased buildup of dust. Not enough lubrication will hasten chain and sprocket wear. Chain and sprocket wear should be closely monitored to assure repairs are made before the equipment breaks down.

17.3.2.2 Drive Machine. The drive mechanism is powered by a gearhead type motor equipped with an integral magnetic brake with a spring return for manual release.

17.3.2.2.1 Inspection Made with Power On. Close the mainline switch and proceed as follows:

a. Have-the conveyor operated making frequent stops. Observe if there is any excessive play or backlash in the bearings or gearing. unusual noise or play is usually an indication of gear or thrust trouble, or damage to bearing liners, rollers, or balls. Bearing problems are also detected by sound and/or heat.

b. Examine all bearings and gears for excessive lost motion or wear. Determine whether bearings and gears are lubricated and that oil rings, chains, or other methods of feeding operate freely. The level of oil in the reservoirs should be checked and any leakage of oil noted.

c. Inspect all motor fastening bolts to determine whether they are in place and tight.

d. Observe the operation of the brake. The brake should not chatter. Check to see that the brake is automatically applied on normal stops.

e. The clearance between the brake shoe and the brake drum when running should not be greater than necessary to permit free running. Examine the brake pins to determine whether they are properly lubricated and not frozen, and that the cotter pins are in place and open. Note any harsh and abrupt brake action.

17.3.2.2.2 Inspection Made with Power Off. Open the mainline switch and proceed as follows:

a. Examine the brake and drum to determine that the brake linings are free of oil and whether there is any scoring of the drum.

b. The brake coil leads, connections, and windings should be examined to check insulation conditions and physical connections.

c. Examine the oil in the gear case to determine whether it is free of metallic particles or other foreign substances. Check the oil level. Visually check the gear for excessive, wear.

d. Gear problems are detected by examining the wear pattern on the gear. This will show that the gear is not properly aligned with the worm, causing the point of contact to be not in the proper position or that the gear is bottoming or contacting the worm shaft. Excessive heat damage, most likely caused by low oil or break down of oil, can also be detected. It is indicated by pock marks in the face of the gear tooth or teeth. They resemble casting defect marks.

e. Examine the motor to see that terminal connections are tight. Connections not properly made may result in poor electrical conduction and points of resistance. This condition creates heat.

f. Also check to see that the leads are not broken or their insulation is not cracked or broken. Improper adjustments can force motor winding to carry more current, which produces heat that will cause insulation to deteriorate.

g. Examine the motor windings to see that they are free of oil, dust, or lint deposits.

17.3.2.2.3 Cars. Cars fabricated of steel are connected to the chain at equal intervals. Steel rail sections, on either side of the car, guide vertically moving cars and are secured to provide lateral and vertical support on each floor. The inspector should examine the guide rollers on each car. Worn or damaged rollers cause shutdowns. Also, each car should be checked for damage.

17.3.3 Inspection Made At Each Landing

(See Figure 17-16)

17.3.3.1 Entrance. Each entrance has stainless steel vertical sliding fire rated doors with keyed locks. These doors are equipped with heat activated fusible links, allowing the door to close in the event of a building fire. During normal operation, the fire rated doors remain open. Examine each door to be sure that it will close in its intended manner when the need arises. Close attention should be given to guiding tracks, springs and latches. Dirt can easily accumulate in these areas and prevent doors from closing properly.

17.3.3.2 Load-Unload Devices. These devices are mechanically operated and subject to wear. Close examination should be given to all hinging points to see that they are properly lubricated. The inspector should observe the operation of each device to assure proper operation is being maintained. Be sure to check all fastenings.

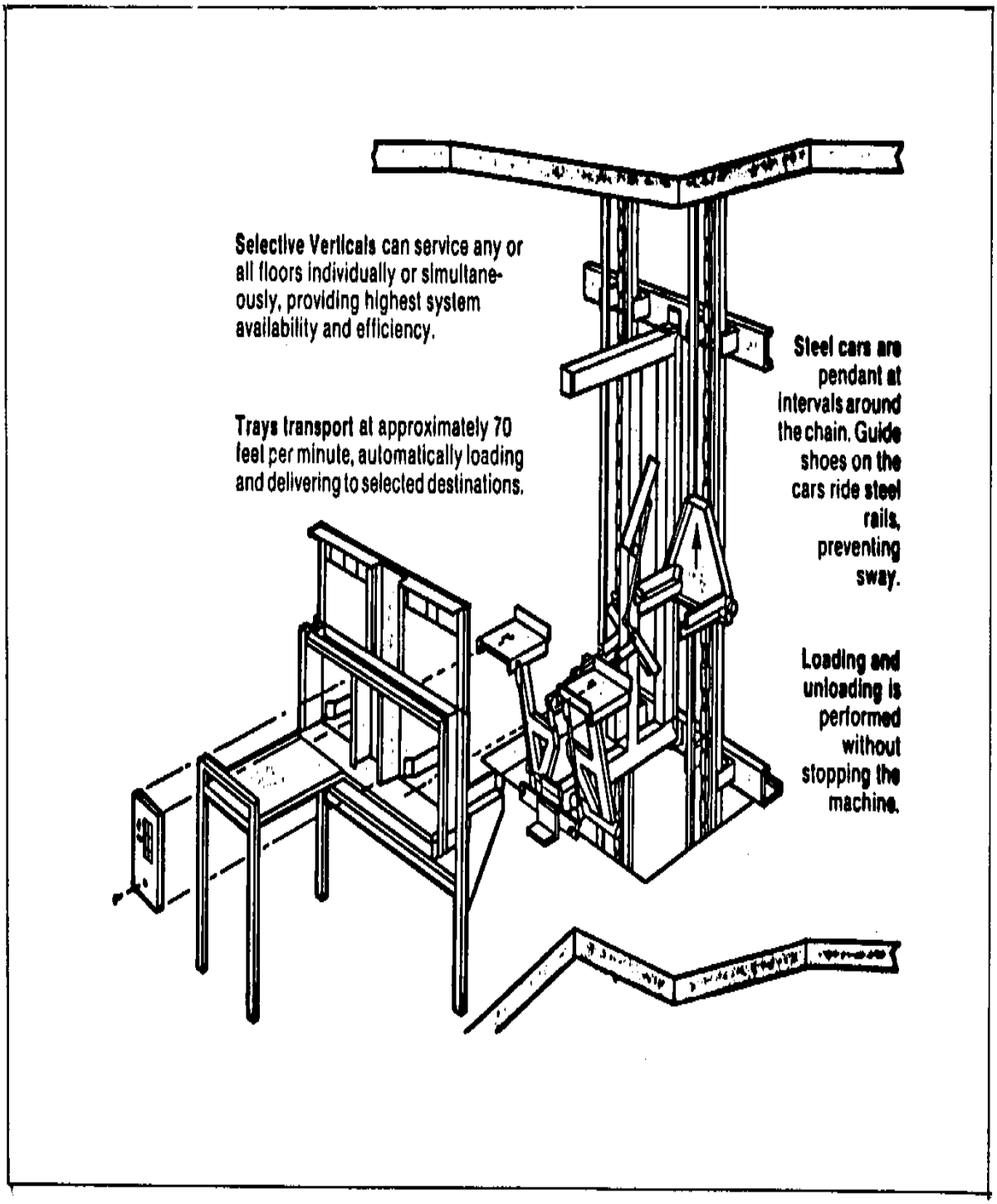

FIGURE 17-16
Typical Floor Space

17.3.3.3 Unloading Table. This should be examined for worn rollers. Rollers not operating can cause a container to not unload properly. The table should be checked for general public hazards, such as sharp edges or protruding screws.

17.3.3.2 Control Stations. Each station should be examined to see that all devices are functioning in their intended manner.

17.3.4 Inspection Made In The Pit

(See Figure 17-17). The take-up pit is located at the bottom of the conveyor and is composed of a fixed and movable steel structure. The fixed frame anchors and aligns the bottom structure and provides lateral and vertical guidance for the movable frame. Rubber in-shear isolator pads shall be provided at all drive and take-up mounting points. The movable frame is equipped with an adjustable compression spring to keep the conveyor chain taut at all time. This movable frame should be kept clean so that it may move. Continuous tension is required on the drive chain to assure proper operation. Spring fastening and adjustments should also be checked.

17.3.5 System Operation

Usually the inspectors will not have to check out the operating system. The user will do that for him during the normal course of everyday use. He should, however, review service records and solicit comments from the user to determine if there have been problems. These specific areas can then be investigated.

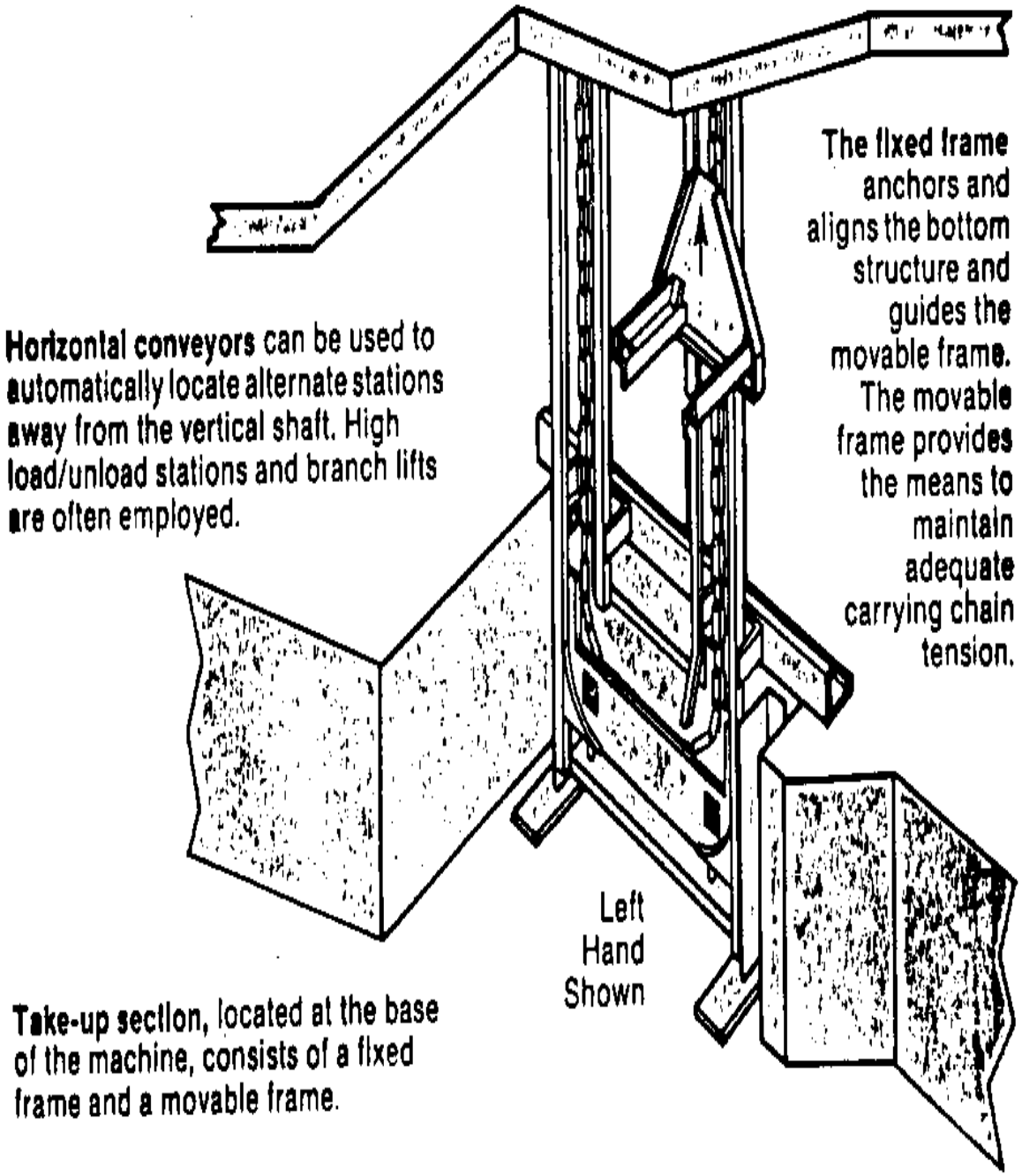

FIGURE 17-17

TYPICAL PIT SPACE

INDEX

A

Applicable Safety Standards
Box Conveyors. 17-1
Construction Hoists For Materials And Personnel. 9-3
Industrial Conveyors 15-2
Levellators. 14-2
Manlifts 10-4
Power Platforms. 13-7
Stacking Cranes. 16-6
Audits 1-6
Automobile Lifts 11-1
Lift Platform Inspection 11-1
Cover and Guards. 11-5
Cylinders 11-4
Drifting of Lift Platform 11-5
General - Safety Precautions. 11-1
Housekeeping. 11-5
Lift Platform 11-1
Non-Rotating Devices. 11-4
Oil and Air Lines 11-5
Operating Speed 11-5
Plungers. 11-4
Plunger Fastenings. 11-4
Rack and Pinion Equalizers. 11-4
Periodic Inspection and Tests. 11-7
Flexible Hydraulic Hose and Fittings Assemblies and Flexible Couplings 11-7
Pressure Tanks. 11-8
Pump Equipment 11-6
Drives (If applicable). 11-6
Equipment Location. 11-7
Flexible Hydraulic Hose and Fitting Assemblies. 11-6
Main Line Switch. 11-6
Operating Valves and Fixtures 11-7
Pumps 11-6
Relief and Check Valves 11-6
Storage and Discharge Tanks 11-7
Use. 11-1

B

Before Making an Inspection. 1-9
Belt Conveyors - Fixed in Place. 15-6
Box Conveyors. 17-1
Applicable Safety Standards 17-1
Selective Vertical Box Conveyor 17-18
General Description. 17-17
Landing Inspection 17-22
Overhead Machinery Space 17-17
Pits 17-24
System Operation 17-24
Self-Propelled Box Converter 17-4
Delivery Vehicles 17-12
Dispatching and Receiving Stations. 17-7
Fire Dampers. 17-12
General Description 17-4
System Operation. 17-17
Switches. 17-7
Track 17-4
Inspection Interval. 17-4
Bucket Conveyors 15-6

C

Car Top
Construction Hoists for Materials and Personnel 9-5
Electric Elevators. 2-11
Lifts with Automatic Transfer Devices 5-1
Special Purpose Elevators. 6-14
Certifications 1-5
Chain Conveyors. 15-6
CONSTRUCTION HOISTS FOR MATERIALS AND. 9-1
Applicable Safety Standards. 9-3
Inside The Car. 9-4
Car Doors. 9-4
Car Enclosure. 9-4
Operating And Control Devices. 9-4
Car Top 9-5
Car And Counterweight Guide Rails, Rail Fastenings, Car Crossheads,
And Car Guiding Members. 9-6

Car-Leveling Devices 9-7
Car Top. 9-6
Counterweight. 9-5
Covers And Guards. 9-7
Hoistway Housekeeping. 9-8
Hoistway Junction Box, Car Junction Box, And Safety Traveling Cables 9-7
Installation Of Pipes, Wiring, And Ducts In Hoistway 9-8
Normal Terminal Stopping Devices 9-5
Operating And Control Devices. 9-4
Suspension And Fastenings. 9-5
Inspection Interval 9-3
Outside Hoistway. 9-3
Hoistway Doors 9-4
Hoistway Enclosure 9-3
Landings 9-3
Overhead Machinery Space And Machine Room 9-9
Control Equipment. 9-16
Driving-Machine Brake. 9-15
Driving-Machine Motor. 9-14
Driving-Machine Terminal Stopping Switches 9-12
Gears And Bearings 9-13
Guards For Exposed Equipment 9-12
Normal And Final Terminal Stopping Switches. 9-13
Machine Room 9-17
Machine Room Access. 9-18
Motor-Generator Sets Used With Generator Field Control 9-15
Overhead Beams And Fastenings. 9-11
Overhead Platforms 9-11
Overhead Secondary And Deflecting Sheaves. 9-10
Slack-Rope Device. 9-13
Speed Governor 9-17
Rack And Pinion Drive. 9-12
Traction Driving Sheave. 9-11
Winding Drum Machine 9-12
Wire Rope Inspection 9-9
Pit 9-8
Buffers. 9-9
Car And Counterweight Bottom Guide Shoes 9-9
Car And Counterweight Safety Parts 9-9
Car Frame (Sling) And Platform 9-8
Pit Housekeeping 9-8
Pit Stop Switch. 9-8
Use 9-3

D

Definitions. 1-2
DUMBWAITER 4-1
Outside Hoistway. 4-4
Car And Counterweight Bottom Guide Shoes 4-18
Car And Counterweight Guide Rails, Rail Fastenings, Car Crossheads, And Car Guiding Members. 4-14
Safety Parts 4-18
Car Doors. 4-10
Car Enclosure. 4-12
Car Frame (Sling) And Platform 4-17
Car-Leveling Devices 4-14
Car Top. 4-14
Counterweight. 4-12
Covers And Guards. 4-14
Hoistway Doors 4-4
Hoistway Housekeeping. 4-17
Hoistway Junction Box, Car Junction box, And Travelling Cables 4-15
Hoistway Ventilation 4-17
Installation of Pipes, Wiring, And Ducts In Hoistway 4-17
Normal Terminal Stopping Devices 4-13
Operating And Control Devices. 4-12
Pit Housekeeping 4-17
Pit Stop Switch. 4-17
Suspension And Fastenings. 4-13
Overhead Machinery Space And Machine Room 4-18
Control Equipment. 4-27
Driving-Machine Brake. 4-26
Driving-Machine Motor. 4-26
Driving Machine Terminal-Stopping Switches 4-23
Gears And Bearings 4-25
Guards For Exposed Equipment 4-23
Machine Room 4-28
Machine Room Access. 4-29
Motor-Generator Sets Used With Generator Field Control 4-27
Normal Terminal Stopping Switches 4-25
Overhead Beams And Fastenings. 4-22
Overhead Grating Or Platforms. 4-22
Overhead Secondary And Deflecting Sheaves. 4-21
Slack-Rope Device. 4-25
Traction Drive Sheave. 4-22

Winding Drum Machine 4-23
Wire Rope Inspection 4-18
Duties. 1-1

E

ELECTRIC ELEVATORS 2-1
Car Top 2-11
Car Top 2-12
Covers And Guards. 2-18
Door Operator 2-12
Guides 2-18
Hoistway Entrances 2-12
Hoistway Housekeeping 2-18
Hoistway Ventilation 2-18
Load Weighing Devices. 2-18
Wire Rope Inspection 2-12
Wiring 2-18
Inside The Car. 2-8
Car Doors. 2-9
Car Enclosure. 2-8
Car Sill 2-9
Firefighter's Service Instructions 2-9
Freight Elevator Enclosures. 2-9
Operating And Signalling Devices 2-8
Performance. 2-10
Outside The Car 2-10
Access Switch Operation. 2-10
Closing Force. 2-10
Counterweights In Separate Hoistway. 2-11
Emergency Key Access 2-10
Firefighter's Service Instructions 2-11
Hoistway Entrances 2-10
Operating And Signalling Devices 2-11
Overhead Machinery Space And Machine Room 2-19
Brake. 2-22
Control Equipment. 2-26
Gears And Bearings 2-22
Guards 2-22
Hoist Motor. 2-22
Machine Room 2-26

Machine Room Access. 2-27
Main Line Switch 2-19
Motor-Generator Set. 2-26
Scope. 2-19
Speed Governor 2-20
Traction Sheave. 2-20
Performance Criteria. 2-1
Periodic Inspection And Tests 2-27
Annual Safety Inspection And Test Of Safeties. 2-28
Annual Speed Governor Inspection 2-28
Annual Test Of Buffers 2-28
Annual Test Of Normal And Final Stopping Devices 2-28
Door Closing Force 2-29
Firefighter's Service Instructions 2-29
Five-Year Inspection And Test Speed Governors And Safeties 2-28
Five-Year Test Of Buffers. 2-28
Scope. 2-27
Standby Power. 2-29
Pit 2-27
Counterweight Runby 2-27
Housekeeping 2-27
Scope. 2-27
Screw Column Elevators. 2-31
In Car Inspection. 2-37
Inspection Of Machine Rooms And Machinery Space. 2-39
Outside Of Hoistway Inspection 2-38
Periodic Inspections And Tests 2-39
Top Of Car Inspection. 2-38
Winding Drum Elevators. 2-30
Normal And Final Stopping Devices. 2-30
Slack Rope Device. 2-31
Winding Drum Machine 2-31
Wire Rope Inspection 2-30
En Masse Conveyors. 15-7
Escalators 7-1
Performance Criteria. 7-1
Tests 7-10
Controls 7-10
Drive Machine. 7-14
Machinery Space. 7-10
Rolling Shutters 7-23
Speed Governor 7-14

Step Chain 7-14
Step Upthrust Device 7-19
Tandom Operation 7-14
Wiring 7-10
Routine Inspection. 7-5
Balustrades And Guards 7-5
Caution Signs. 7-7
Combplates 7-5
Handrails. 7-5
Illumination 7-7
Operation 7-7
Skirt Obstruction Device 7-7
Skirt To Step Clearance. 7-7
Start Switch 7-10
Step Treads And Risers 7-5
Fight And Apron Conveyors Bulk Material 15-7

H

Handicapped Lifts. 6-17
Hydraulic Elevators. 3-1
Car Top 3-6
Anti-Creep 3-7
Car Top. 3-7
Covers And Guards. 3-7
Door Operator. 3-7
Guides 3-7
Hoistway Entrances 3-7
Hoistway Housekeeping. 3-7
Hoistway Ventilation 3-7
Operating Speed. 3-8
Wiring 3-7
Inside The Car. 3-4
Car Doors. 3-4
Car Enclosure. 3-4
Car Sill 3-4
Firefighter Service Instructions 3-6
Freight Elevator Enclosures. 3-4
Operating And Signalling Devices 3-4
Performance. 3-6
Outside The Car 3-6

Access Switch Operation. 3-6
Closing Force. 3-6
Emergency Key Access 3-6
Firefighter's Service Instructions 3-6
Hoistway Entrance 3-6
Operation And Signalling Devices 3-6
Overhead Machinery Space Or Machine Room. 3-8
Bearings 3-11
Control Equipment. 3-11
Guards 3-11
Machine Room 3-11
Machine Room Access. 3-11
Main Line Switch 3-8
Oil Leakage. 3-8
Relief Valve 3-8
Performance Criteria. 3-1
Periodic Inspection And Tests 3-12
Door Closing Force 3-12
Firefighter's Service Instructions 3-12
Standby Power. 3-12
Pit 3-11
Housekeeping. 3-11

I

Inclined Elevators 6-23
Incline Reciprocating Conveyors. 15-7
Industrial Conveyors 15-1
Applicable Safety Standards 15-2
Inspection Procedures 15-3
Condition Of Maintenance 15-3
Controlled Access. 15-3
Controls 15-5
Drive Machines 15-4
Entry Or Loading Area. 15-4
Floor Openings 15-3
Floor Openings Guards. 15-4
Illumination 15-4
Machinery Areas. 15-5
Machinery Area Access. 15-6
Verification Of Application. 15-3

Inspection Interval. 15-2
Special Conveyor Safety Considerations 15-6
Belt Conveyors-Fixed In Place. 15-6
Bucket Conveyors 15-6
Chain Conveyors. 15-6
En Masse Conveyors 15-7
Flight And Apron Conveyors Bulk Material. 15-7
Incline Reciprocating Conveyors. 15-7
Live Roller Conveyors Belt Or Chain Driven 15-8
Mobile Conveyors 15-8
Portable Conveyors, Extending Belt Conveyors, And Car Unloaders. 15-9
Pusher Bar Conveyors 15-9
Roller And Wheel Conveyors 15-9
Screw Conveyors. 15-9
Shuttle Conveyors, Belt Trippers, And Transfer Cars. 15-10
Skip Hoists - Bulk Materials. 15-10
Slat Conveyors And Roller Slat Conveyors 15-11
Suspended Verticle Tray Conveyors. 15-11
Tow Conveyors In The Floor 15-11
Trolley Conveyors And Power And Free Conveyors 15-12
Vertical Articulated Platform Conveyors. 15-13
Vertical Chain Opposed Shelf Type Conveyors. 15-13
Vertical Reciprocating Conveyors 15-13
Use 15-1
Inside The Car Hoists For Materials And Personnel. 9-1
Electric Elevators. 2-8
Hydraulic Elevators 3-4
Inclined Elevators. 6-23
Lifts with Automatic Transfer Devices 5-8
Residence Elevators 6-8
Sidewalk Elevators. 6-1
Special Purpose Elevators 6-12
Inspection 1-3
Inspection Criteria. 1-10
Inspection Interval Construction Hoists For Materials And Personnel. 9-3
Industrial Conveyors. 15-1
Manlifts. 10-4
Power Platforms 13-7
Stacking Cranes 16-1
Inspection Procedures Industrial Conveyors 15-3
Levellators 14-2
Manlifts. 10-5

Mechanized Parking Garage Equipment 12-1
Power Platforms 13-9
Inventory. 1-6

L

Levellators. 14-1
Inspection Procedures 14-2
Controls. 14-6
Covers And Guards 14-8
Cylinders 14-9
Drifting Of Lift Platform 14-9
Housekeeping. 14-9
Illumination. 14-5
Landings. 14-2
Landing Guards And Skirts 14-5
Lift Platform 14-8
Machinery Area. 14-7
Machinery Area Access 14-8
Oil Lines 14-9
Plungers. 14-9
Plunger Fastenings. 14-9
Power Unit. 14-5
Periodic Inspection And Tests. 14-10
Flexible Hydraulic Hose And Fitting Assemblies And Flexible Couplings. 14-10
Pressure Tanks. 14-10
Relief And Check Valve Settings 14-10
Safety Standards 14-2
Use. 14-1
Lifts With Automatic Transfer Devices. 5-1
Application 5-1
Car Top 5-10
Car Top. 5-10
Sill Clearance 5-10
Inside The Car. 5-8
Car Doors. 5-9
Car Enclosure. 5-9
Operating And Signalling Devices 5-8
Outside The Car 5-9
Feeding Conveyors. 5-10
Hoistway Entrances 5-9

Non-Restricted Area. 5-9
Performance Criteria. 5-3
Pit 5-10
Buffers. 5-10
Safety Device. 5-10
Live Roller Conveyors Belt or Chain Driven 15-8

M

Maintenance Criteria 1-10
Maintenance Records. 1-11
Manlifts 10-1
Applicable Safety Standards 10-4
Inspection Interval 10-4
Inspection Procedures 10-5
Belt 10-8
Belt Fastenings. 10-9
Bottom Arrangement 10-8
Controlled Access. 10-5
Controls 10-14
Drive Machine. 10-8
Emergency Ladders. 10-8
Floor Opening Guards 10-6
Floor Openings 10-5
Handholds. 10-12
Illumination 10-5
Landing Guards 10-6
Landings 10-5
Machinery Area 10-15
Machinery Area Access. 10-15
Protection Of Entrances And Exits. 10-6
Pulleys. 10-9
Pulley Protection. 10-9
Signs. 10-14
Speed. 10-12
Steps. 10-12
Stopping Devices 10-13
Top Clearance. 10-8
Purpose. 10-1
Use. 10-1
Mechanized Parking Garage Equipment. 12-1

Inspection Procedures 12-1
Controls. 12-4
Covers And Guards 12-6
Cylinders 12-6
Drifting Of Lift Platform 12-7
Housekeeping. 12-6
Illumination. 12-3
Landings. 12-1
Lift Platform 12-5
Machinery Area. 12-5
Machinery Area Access 12-5
Oil Lines 12-7
Plungers. 12-6
Plunger Fastenings. 12-6
Power Unit. 12-3
Periodic Inspection And Tests. 12-7
Flexible Hydraulic Hose And Fitting Assemblies And Flexible Couplings. 12-7
Pressure Tanks. 12-8
Mobile Conveyors. 15-8
Moving Walks. 8-1
Performance Criteria 8-1
Periodic Inspection And Tests. 8-9
Broken Treadway Device. 8-10
Controls. 8-9
Drive Machine 8-10
Machinery Space. 8-9
Pallet Chain 8-10
Rolling Shutters 8-11
Scope. 8-9
Speed Governor. 8-10
Speed Test. 8-11
Wiring. 8-10
Routine Inspection. 8-5
Balustrades And Guards 8-5
Handrails. 8-5
Illumination 8-7
Operation. 8-7
Scope. 8-5
Skirt To Treadway Clearance. 8-9
Start Switch 8-9
Threshold Plates 8-7

Treadway 8-5
Treadway Supports. 8-7

O

Objective. 1-1
Outside Hoistway Construction Hoists For Materials And Personnel. 9-3
Dumbwaiter 4-4
Residence Elevators. 6-8
Sidewalk Elevators 6-1
Special Purpose Elevators. 6-15
Outside The Car
Electric Elevators 2-10
Hydraulic Elevators. 3-6
Inclined Elevators 6-24
Lifts With Automatic Transfer Devices. 5-9
Overhead Machinery Space And Machine Room Construction Hoists For
Materials And Personnel. 9-9
Dumbwaiter 4-18
Electric Elevators 2-19
Hydraulic Elevators. 3-8
Inclined Elevators 6-25
Residence Elevators. 6-11
Sidewalk Elevators 6-5
Special Purpose Elevators. 6-15

P

Performance Criteria 2-1
Electric Elevators 2-1
Escalators 7-1
Hydraulic Elevators 3-1
Lifts With Automatic Transfer Devices. 5-3
Moving Walks 8-1
Periodic Inspection And Tests
Automobile Lifts 11-1
Electric Elevators 2-27
Escalators 7-10
Hydraulic Elevators. 3-12
Inclined Elevators 6-27

Levellators. 14-10
Mechanized Parking Garage Equipment. 12-7
Residence Elevators. 6-12
Sidewalk Elevators 6-7
Special Purpose Elevators. 6-16
Personal Safety. 1-7
Pit
Construction Hoists For Materials And Personnel. 9-8
Electric Elevators 2-27
Hydraulic Elevators. 3-11
Lifts With Automatic Transfer Devices. 5-10
Sidewalk Elevators 6-7
Portable Conveyors, Extending Belt Conveyors, And Car Unloaders. 15-9
Power Platforms. 13-1
Applicable Safety Standards 13-7
Inspection Interval 13-7
Inspection Procedures 13-9
Application. 13-9
Controls.(For Roof Car Type Devices) 13-9
Inspections Performed On The Roof Or On The Ground
For Ground Rigged Powered Scaffolds. 13-9
Inspections Performed On The Powered Scaffold. 13-9
Maintenance And Repair 13-9
Special Safety Precautions. 13-8
Use 13-7
Pusher Bar Conveyor. 15-9

Q

Qualifications 1-6

R

Reporting. 1-5
Residence Elevators. 6-8
Responsibility 1-2
Roller And Wheel Conveyors 15-9

S

Screw Column Elevators 2-31
Screw Conveyors. 15-9
Selective Vertical Box Conveyor. 17-17
Self-Propelled Box Conveyor. 17-4
Shuttle Conveyors, Belt Trippers, And Transfer Cars. 15-10
Sidewalk Elevators 6-1
Skip Hoists-Bulk Materials 15-10
Slat Conveyors and Roller Slat Conveyors 15-11
Special Application Elevators. 6-1
Handicapped Lifts 6-17
Landing Inspection 6-22
Machine Space Inspection 6-22
Platform Inspection. 6-17
Inclined Elevators. 6-23
Hoistway 6-23
Inside The Car 6-24
Machine Room And Machine Space 6-25
Outside The Car. 6-24
Periodic Inspection And Tests. 6-27
Residence Elevators 6-8
Inside The Car 6-8
Inside The Hoistway. 6-11
Machine Room And Machine Space 6-11
Outside The Hoistway 6-10
Periodic Inspection And Tests. 6-12
Sidewalk Elevators. 6-1
Inside The Car. 6-3
Machine Room And Machine Space. 6-5
Outside The Hoistway. 6-4
Periodic Inspection And Tests 6-7
Pit 6-7
Special Purpose Elevators. 6-12
Inside The Car. 6-13
Inside The Hoistway 6-16
Machine Room And Machine Spaces 6-15
Outside The Hoistway. 6-15
Periodic Inspection And Tests 6-16
Top Of Car. 6-14
Special Purpose Elevators. 6-12
Special Safety Precautions

Power Platforms 13-8
Stacking Cranes. 16-1
Applicable Safety Standards 16-6
Inspection Interval 16-6
Inspection Made From Inside The Cab 16-6
Enclosure 16-6
General Safety Precautions. 16-6
Operation 16-6
Inspection Of The Aisle
Drive. 16-15
Gear Case 16-18
General 16-15
Inspection Of The Motor Brake 16-18
Magnetorque Load Brake. 16-18
Motor 16-15
Wheels. 16-18
Inspection Of The Bridge 16-8
General 16-8
Guides. 16-8
Hoist Drive System. 16-8
Hoist Drum. 16-11
Inspection Of Broken Rope Safety Device 16-13
Wire Or Cable 16-11
Inspection of the Carriage 16-19
Adjustments 16-23
Carriage Spring 16-19
General 16-19
Guide Rollers 16-19
Scanning System 16-25
Shifter Assembly. 16-19
Shifter Drive 16-23
Inspection Of The Controller 16-18
General 16-18
Inspections 16-19
Inspection Of The Upper End Tie. 16-25
Sheave Assemblies 16-25
Upper Guide Rollers 16-25
Suspended Verticle Tray Conveyors. 15-11

T

Tow Conveyors In The Floor 15-11
Trolley Conveyors And Power And Free Conveyors 15-12

U

Use
Box Conveyors. 17-1
Construction Hoists For Materials And Personnel. 9-3
Industrial Conveyors 15-1
Levellators. 14-1
Lifts With Automatic Transfer Devices. 5-1
Manlifts 10-1
Power Platforms. 13-7
Stacking Cranes. 16-1

V

Vertical Articulated Platform Conveyors. 15-13
Vertical Chain Opposed Shelf Type Conveyors. 15-13
Vertical Reciprocating Conveyors 15-13

W

Winding Drum Elevators 2-30