Naval Facilities Engineering Command
200 Stovall Street
Alexandria, Virginia 22332-2300

APPROVED FOR PUBLIC RELEASE

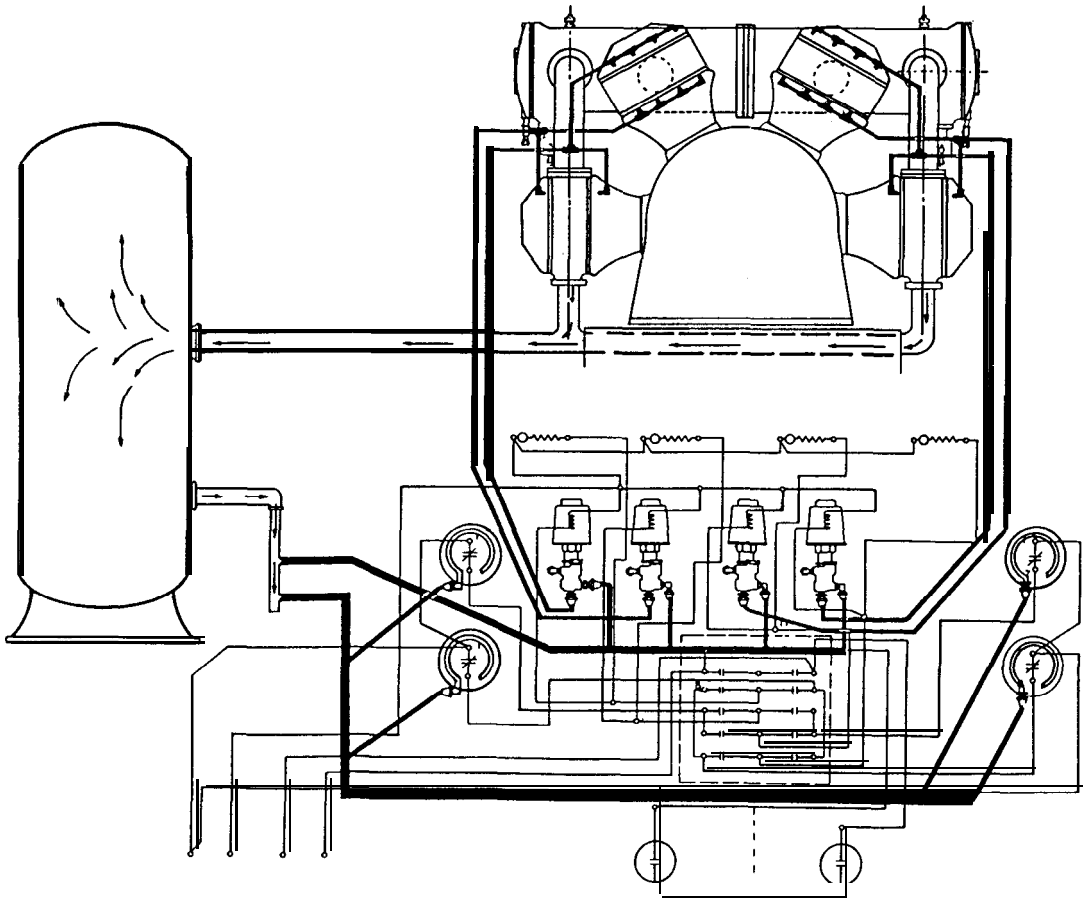

Maintenance and Operation of Air Compressor Plants

NAVFAC MO-206
January 1989

SN 0525-LP173-1715

ABSTRACT

This manual is directed to operators and supervisors who actually perform and supervise operations and maintenance work. The manual is divided into five chapters with chapter one covering definitions and responsibilities. Chapters two and three cover positive displacement and dynamic compressors, respectively. Chapter four deals with auxiliary equipment, while chapter five covers compressor controls. In general, this manual provides guidelines for maintenance and operation of air compressor plants.

FOREWORD

This publication provides information on the maintenance and operation of air compressor plants.

For maximum benefit, this manual should be used in conjunction with equipment manufacturers' manuals, parts lists and drawings. In case of conflict, manufacturers' recommendations on use, care, operations, adjustment and repair of specific equipment should be followed. The manual is a general guide which establishes standards for the operators, mechanics, and supervisors who are responsible for carrying out operations and maintenance functions.

Additional information concerning procedures, suggestions, recommendations OK modifications that will improve this manual are continually invited and should be submitted through appropriate channels to the Commander, Naval Facilities Engineering Command, (Attention: Code 165), 200 Stovall Street, Alexandria, VA 22332-2300.

This publication cancels and supersedes NAVAC MO-206 of January 1964 and any changes thereto. It has been reviewed and approved in accordance with the Secretary of the Navy Instruction 5600.16A and is certified as an official publication of the Naval Facilities Engineering Command.

C. M. Maskell

C. M. MASKELL
Captain, CEC, U.S. Navy
Deputy Commander for
Public Works

CONTENTS

		Page
CHAPTER 1.	DEFINITIONS AND RESPONSIBILITIES	1-1
Section 1.	AIR COMPRESSOR PLANT	1-1
	1 COMPONENTS OF AN AIR COMPRESSOR PLANT	1-1
	2 AIR COMPRESSOR	1-1
	3 AUXILIARY EQUIPMENT	1-1
	4 CONTROLS	1-3
	5 COOLING WATER TREATMENT	1-4
Section 2.	OPERATION AND MAINTENANCE RESPONSIBILITIES	1-5
	1 OPERATION	1-5
	2 DISASTER CONTROL	1-5
	3 OPERATOR MAINTENANCE	1-6
	4 PREVENTIVE MAINTENANCE	1-7
	5 BREAKDOWN MAINTENANCE	1-7
	6 COMPRESSED AIR SYSTEM LEAKS	1-7
CHAPTER 2.	POSITIVE DISPLACEMENT COMPRESSORS	2-1
Section 1.	RECIPROCATING COMPRESSORS	2-1
	1 DESCRIPTION	2-1
	2 SAFETY PRECAUTIONS	2-1
	3 STARTUP	2-3
	4 NORMAL OPERATION	2-5
	5 SHUTDOWN	2-5
	6 OPERATIONAL PREVENTIVE MAINTENANCE	2-6
	7 PREVENTIVE MAINTENANCE INSPECTION	2-6
	8 MAINTENANCE	2-8
Section 2.	ROTARY SLIDING VANE COMPRESSORS	2-13
	1 DESCRIPTION	2-13
	2 STARTUP	2-13
	3 NORMAL OPERATION	2-15
	4 SHUTDOWN	2-15
	5 OPERATIONAL PREVENTIVE MAINTENANCE	2-16
	6 PREVENTIVE MAINTENANCE INSPECTION	2-16
	7 MAINTENANCE	2-17
Section 3.	ROTARY TWIN-LOBE COMPRESSORS	2-19
	1 DESCRIPTION	2-19
	2 STARTUP	2-19
	3 NORMAL OPERATION	2-21
	4 SHUTDOWN	2-21
	5 OPERATIONAL PREVENTIVE MAINTENANCE	2-21
	6 PREVENTIVE MAINTENANCE INSPECTION	2-21
	7 MAINTENANCE	2-22
Section 4.	ROTARY LIQUID PISTON COMPRESSORS	2-23
	1 DESCRIPTION	2-23
	2 STARTUP	2-23

CONTENTS (Continued)

Page

3 NORMAL OPERATION 2-23
4 SHUTDOWN 2-23
5 OPERATIONAL PREVENTIVE MAINTENANCE 2-25
6 PREVENTIVE MAINTENANCE INSPECTION 2-25
7 MAINTENANCE 2-26

CHAPTER 3. DYNAMIC COMPRESSORS 3-1
1 DESCRIPTION 3-1
2 STARTUP 3-3
3 NORMAL OPERATION 3-5
4 SHUTDOWN 3-5
5 OPERATIONAL PREVENTIVE MAINTENANCE 3-7
6 PREVENTIVE MAINTENANCE INSPECTION 3-8
7 MAINTENANCE 3-9

CHAPTER 4. AUXILIARY EQUIPMENT 4-1

Section 1. INTAKE FILTERS 4-1
1 DESCRIPTION 4-1
2 INSPECTION 4-1
3 MAINTENANCE 4-2

Section 2. SILENCERS 4-5
1 DESCRIPTION 4-5
2 INSPECTION AND MAINTENANCE 4-5

Section 3. INTERCOOLERS AND AFTERCOOLERS 4-7
1 DESCRIPTION 4-7
2 STARTUP 4-8
3 NORMAL OPERATION 4-8
4 SHUTDOWN 4-9
5 OPERATIONAL PREVENTIVE MAINTENANCE 4-9
6 PREVENTIVE MAINTENANCE INSPECTION 4-9
7 MAINTENANCE 4-11

Section 4. SEPARATORS 4-13
1 DESCRIPTION 4-13
2 OPERATION 4-13
3 PREVENTIVE MAINTENANCE INSPECTION 4-13
4 MAINTENANCE 4-14

Section 5. TRAPS 4-15
1 DESCRIPTION 4-15
2 STARTUP 4-15
3 SHUTDOWN 4-15
4 PREVENTIVE MAINTENANCE INSPECTION 4-15
5 MAINTENANCE 4-15

Section 6. AIR RECEIVERS 4-19
1 DESCRIPTION 4-19

CONTENTS (Continued)

Page

2 NORMAL OPERATION 4-19
3 PREVENTIVE MAINTENANCE INSPECTION 4-19
4 MAINTENANCE 4-20

Section 7. DRYERS 4-21
1 DESCRIPTION 4-21
2 TYPES 4-21
3 NORMAL OPERATION 4-23
4 PREVENTIVE MAINTENANCE INSPECTION 4-24
5 MAINTENANCE 4-25

CHAPTER 5. CONTROLS.. . . . . 5-l

Section 1. PRIME MOVER CONTROLS 5-l
1 DESCRIPTION 5-l
2 STARTUP 5-4
3 NORMAL OPERATION 5-4
4 SHUTDOWN 5-4
5 OPERATIONAL PREVENTIVE MAINTENANCE 5-4
6 PREVENTIVE MAINTENANCE INSPECTION 5-5
7 MAINTENANCE 5-5

Section 2. COMPRESSOR CONTROLS 5-7
1 CAPACITY CONTROL 5-7
2 STARTUP 5-15
3 NORMAL OPERATION 5-15
4 SHUTDOWN 5-15
5 OPERATIONAL PREVENTIVE MAINTENANCE 5-15
6 PREVENTIVE MAINTENANCE INSPECTION 5-15
7 MAINTENANCE 5-16

REFERENCES . . . . . Reference-l

APPENDIX A - ABBREVIATIONS AND ACRONYMS . . . . . A-l

APPENDIX B - EVALUATION OF LOSSES IN COMPRESSED AIR SYSTEMS. . . B-l
1 COMPRESSED AIR SYSTEM LEAKS B-2
2 TEST METHOD B-2
3 TEST EQUIPMENT B-2
4 TEST PRECAUTIONS B-2
5 TEST PROCEDURES B-2
6 CORRECTIVE MEASURES B-6

INDEX Index-1

FIGURES

Figure		Page
1-1	Main Components of an Air-Compressor Plant.	l-2
2-1	Two-Cylinder, Two-Stage, V-Type Air Compressor	2-2
2-2	Installing Piston Rings	2-9
2-3	Connecting Rod With Wedge Adjusting Bearings	2-10
2-4	Connecting Rod Assembly	2-11
2-5	Method of Checking the Tension of V-Belts	2-11
2-6	Cross Section of Rotary Sliding Vane Compressor	2-13
2-7	Cutaway View of Two-Stage, Rotary Sliding Vane Compressor.	2-14
2-8	Impeller Arrangement of Rotary Twin-Lobe Compressor	2-20
2-9	Rotary Twin-Lobe Compressor	2-20
2-10	Compression Cycle, Rotary Liquid Piston Compressor.	2-24
2-11	Functional Elements, Rotary Liquid Piston Compressor.	2-25
3-l	Simple Volute Pump	3-l
3-2	Six-Stage Compressor	3-2
3-3	Impeller Design	3-2
3-4	Axial Flow Compressor	3-3
3-5	Rotor and Stator Blades, Axial Compressor	3-4
3-6	Alignment Setup	3-11
3-7	Coupling Alignment and Misalignment	3-12
4-1	Oil-Bath Intake Filter	4-2
4-2	Compressor Intake Silencer	4-5
4-3	Air-Cooled Heat Exchanger	4-7
4-4	Water-Cooled Heat Exchanger	4-8
4-5	Centrifugal Type Separator	4-13
4-6	Baffle Type Separator	4-14
4-7	Drain Traps	4-16
4-8	Air Receiver	4-19
4-9	Flow Diagram of Electric Reactivated Absorption Dryer	4-21
4-10	Deliquescent (Absorption) Dryer	4-22
4-11	Flow Diagram of Refrigeration Dryer	4-23
5-1	Automatic Start-Stop Governor	5-2
5-2	Variable Speed, Oil Relay Governor	5-3
5-3	Inlet Valve Unloader	5-8
5-4	Airflow Diagram of Compressor With Five-Step Control	5-9
5-5	Three-Way Solenoid Valve	5-10
5-6	Five-Step Clearance Control	5-11
5-7	Intake Unloader for Rotary Sliding Vane Compressor	5-13
B-1	Loss (cfm) vs Pressure (psig)	B-6

TABLES

Table	Title	Page
1-1	Maximum Pressures and Capacities of Air Compressors	1-3
1-2	Troubleshooting Chart	1-8
B-1	Amount and Cost of Air Leaks	B-3
B-2	Pressure Test Data	B-4
B-3	Calculation of Losses	B-4

SAFETY SUMMARY

Whenever work is to be accomplished on air compressor plants there is always the possibility of a hazardous situation occurring, which could result in serious injury to or death of personnel. Performance without injury is a sign of conscientious workmanship and planned supervision. Therefore, safety is a primary consideration when operating, inspecting, or maintaining any of the air compressor plants addressed in this publication.

The first essential action is to read and understand all publications associated with the systems and equipment being used. The manuals explain safe and accepted ways of installation, startup, operation, inspection, maintenance, removal, and shutdown. If you do not understand what you have read, DO NOT attempt to perform the intended task; get guidance from your supervisor.

The following safety rules are emphasized:

GENERAL

- All personnel should be trained and qualified in cardiopulmonary resuscitation (CPR).
- All personnel should wear safety shoes.
- All personnel should wear clothing appropriate to the job being performed. Eliminate loose clothing, which can get caught in machinery.
- Wear hardhats when required.
- All personnel should wear eye and ear protection prescribed for the task being performed.
- Report all injuries, even if they seem to be minor.
- DO NOT WORK ALONE. At least one other person should be on hand to provide assistance, if needed.
- Always use the correct tool for the job.
- Prevent skin ruptures and sensory injuries when working with compressed air. Close isolation valves before working on lines or fittings.
- Follow lockout and tagout procedures prescribed for the plant.
- Current and accurate drawings of various mechanical systems are essential for operational safety of the plant.

ELECTRICAL WORK

- Do not wear jewelry, including rings, bracelets, necklaces, or wrist watches.

- Do not wear jackets with metal zippers.
- Do not use metal ladders.
- Do not take short cuts. The steps recommended by a manufacturer usually have a margin of safety built into them.
- Do not try to connect meters to circuits unless you are qualified. Wait for an electrician.
- Always use insulated tools and grounded equipment. NEVER USE screwdrivers or other tools with metal shanks extending through the handle.
- Always use and observe tags and lockouts on circuits being worked on.

WARNINGS AND CAUTIONS

Warnings and cautions appear in equipment manuals. A CAUTION is a statement regarding an operating or maintenance procedure, practice, or condition which, if not strictly observed, could result in damage to, or destruction of, equipment or data, loss of mission effectiveness, or long-term health hazards to personnel. A WARNING is a statement regarding an operating or maintenance procedure, practice, or condition which, if not strictly observed, could result in injury to, or death of, personnel.

The warnings and cautions which appear in this manual are repeated here for emphasis and reinforcement of their need to be observed explicitly. The numbers in parentheses at the end of each warning and caution indicate the page on which it appears; for example, (4-15) refers to page 4-15.

WARNING

Do not use gasoline, kerosene, or other low flashpoint solvents. A serious explosion may result. (2-8, 3-10, 4-3, 4-6, 4-15, 4-20, 5-5, 5-16)

If impellers are to be rotated, keep hands, feet, loose clothing, and foreign objects away from inlet and discharge openings, as serious personal injury or damage to equipment can occur. (2-19)

Do not operate equipment without adequate silencing devices. High noise levels may cause permanent hearing damage. (2-19)

Compressor equipment, compressed air, and electricity can be dangerous. To prevent injury, before attempting any maintenance be certain the compressor cannot be started accidentally. (3-3)

WARNING

Protective devices must be worn to avoid damage to hearing. (3-4)

Do not attempt to repair or remove any compressor system parts without first relieving pressure from the entire system. (4-9, 4-14, 4-15, 4-20, 4-24, 4-25, 4-26)

CAUTION

Never operate compressor in the critical speed range (insufficient volume at the compressor inlet to permit stable operation); surging or pumping will occur. Operation under these conditions may result in equipment damage. (3-5)

To avoid damage to equipment, after shutting down the drive, keep auxiliary lubricating oil pump operating until bearings have cooled to ambient temperatures. (3-5)

To avoid internal damage to equipment, use only synthetic sponges when cleaning internal surfaces and components. Do not use cloth rags or cotton waste. (3-10)

To ensure proper alignment, check alignment in both the hot and cold condition. After checking the alignment in the cold condition, operate the compressor under full load for 1 hour. Shut down the unit and recheck the alignment immediately. (3-10)

Dry type filter elements can easily be damaged allowing harmful particulates to pass. If in doubt about correct cleaning procedures, replace the filter element. (4-2)

Ensure all joints are tight to avoid entry of unfiltered air. Dirt in the air will cause premature wear to the compressor. (4-6)

Never hammer on the tubes or use sharp edged scrapers which may damage the tubes. (4-11)

Chemical solutions used for cleaning should be capable of dissolving the scale or other deposits without attacking the metal. (4-11)

CAUTION

Do not overrun the unit. Overrunning will result in the tower becoming saturated and unable to absorb any more moisture. Moisture laden air will then be carried over into the distribution system. (4-23)

On systems where oil carryover from the compressor is present, provision should be made to protect the desiccant bed of the dryer from becoming oil saturated. Oil deposits in the desiccant bed cause a decrease in drying efficiency and necessitate frequent replacement of the desiccant.(4-23)

Do not attempt to service the sealed refrigeration unit; damage to the unit may result. Contact the manufacturer in the event of any malfunction. (4-26)

The operator must have a thorough understanding of the control system and its operation. (5-4, 5-15)

CHAPTER 1. DEFINITIONS AND RESPONSIBILITIES

Section 1. AIR COMPRESSOR PLANT

1 COMPONENTS OF AN AIR COMPRESSOR PLANT. Compressed air is a form of power that has many important uses in industrial activities. Air compressor plants are used to provide an adequate quantity of compressed air at sufficient pressure to various points of application. Distribution of compressed air is found in NAVFAC MO-209, Maintenance of Steam, Hot Water, and Compressed Air Distribution Systems. Components of a plant are: air compressor, intercoolers, aftercoolers, moisture separator, air receiver, and controls (figure l-l).

2 AIR COMPRESSOR. The air compressor is the heart of a compressed air plant. Compressors are used to increase the pressure of air from the initial conditions (air intake) to the discharge conditions (air discharge). Compressors may be used as vacuum pumps. A vacuum pump has an intake that is below atmospheric pressure and usually compresses to no higher than atmospheric pressure. The degree of vacuum attainable is dependent upon the type of system, leakage into the system, and limitations of the equipment. The main types of air compressors are positive displacement and dynamic.

2.1 Positive Displacement Compressors. There are two basic types of positive displacement compressors. In one, air is compressed as the volume of the enclosed space is reduced. In the other, a definite quantity of air is trapped and transferred from the suction intake to the discharge port without reducing its volume. Pressure increase is caused by backflow into the casing when the discharge port is uncovered. Examples of the first type are reciprocating compressors, rotary sliding vane compressors, and rotary liquid piston compressors. An example of the second type is the rotary twin-lobe compressor. Refer to chapter 2 for details.

2.2 Dynamic Compressors. Dynamic compressors operate by imparting velocity and pressure to the admitted air, through the action of a rapidly spinning impeller or rotating vanes. The main types of dynamic compressors are centrifugal and axial compressors. Refer to chapter 3 for details.

2.3 Maximum Pressures and Capacities of Air Compressors. The approximate maximum pressures in pounds-force per square inch gauge (psig), and the approximate maximum capacities in cubic feet per minute (cfm) for various types of compressors are given in table l-l.

3 AUXILIARY EQUIPMENT. The following auxiliary equipment is required for the proper operation of an air compressor plant.

3.1 Air Intake Filters. Filters prevent the admission of atmospheric dust to the air compressor. Refer to chapter 4, section 1 for details.

3.2 Silencers. Silencers reduce objectionable compressor suction noise. Refer to chapter 4, section 2.

3.3 Intercoolers and Aftercoolers. Intercoolers are used between consecutive stages of multistage compressors to remove the heat of compression. Aftercoolers are installed on the compressor discharge lines to remove the heat of compression after compression is completed. Both are effective in

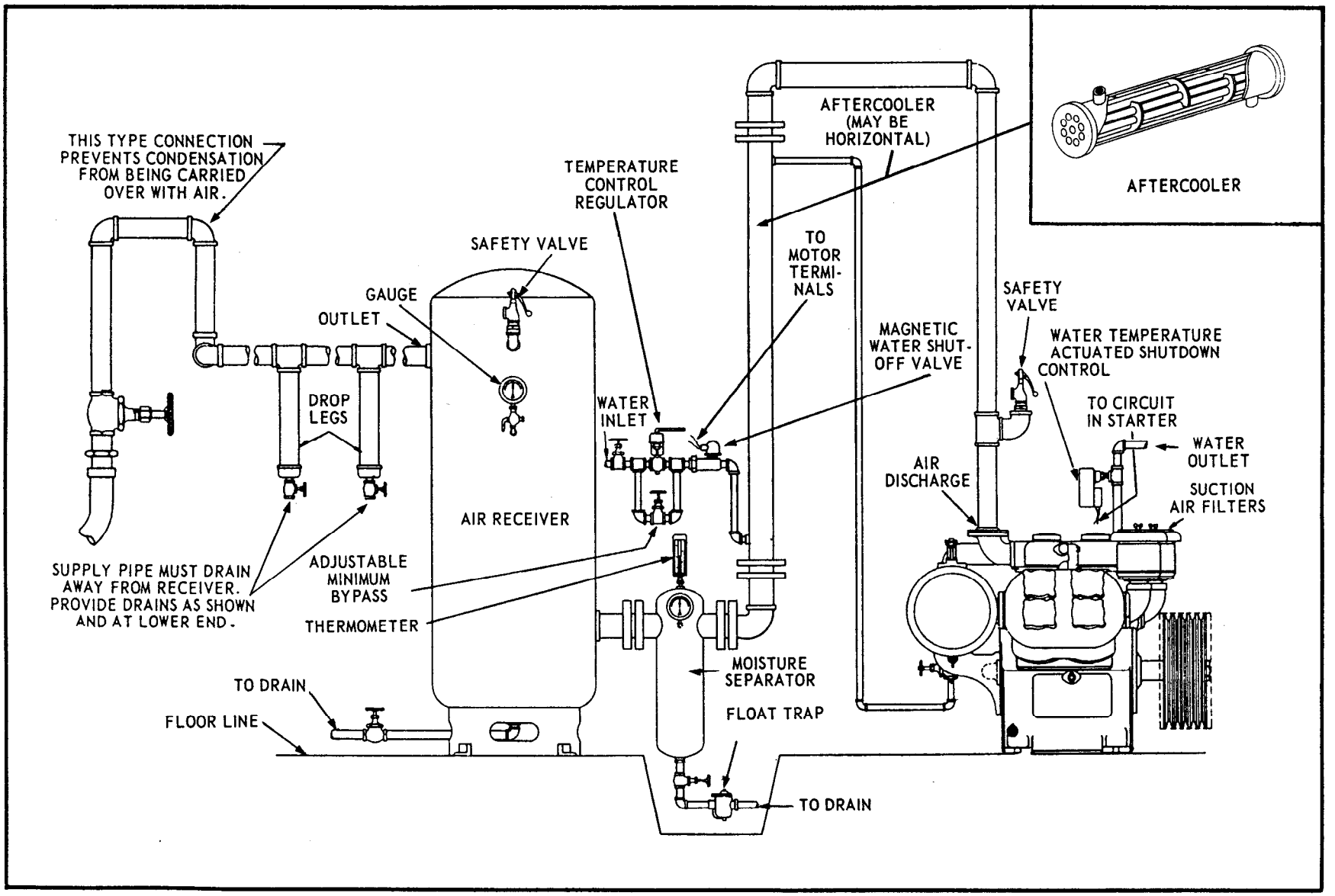

FIGURE 1-1. Main Components of an Air Compressor Plant

TABLE 1-1. Maximum Pressures and Capacities of Air Compressors

Compressor Type	Maximum Pressure (psig)	Maximum Capacity (cfm)
Reciprocating	100,000	26,000
Rotary sliding vane	400	6,000
Rotary twin-lobe	20	32,800
Rotary liquid piston	100	16,000
Centrifugal	5,500	650,000
Axial	500	1,000,000

removing moisture and oil from the compressed air. Refer to chapter 4, section 3.

3.4 Separators. Separators remove and collect entrained water and oil precipitated from the air. Refer to chapter 4, section 4.

3.5 Traps. Traps drain condensed moisture and oil from separators, intercoolers, aftercoolers, receivers, and distribution piping. Refer to chapter 4, section 5.

3.6 Air Receivers. Air receivers are tanks wherein compressed air is discharged and stored. They help to reduce pulsations in the discharge line and provide storage capacity to meet peak demands exceeding the capacity of the compressor. Refer to chapter 4, section 6.

3.7 Air Dryers. Air dryers remove moisture that might condense in air lines, air tools, or pneumatic instruments. Refer to chapter 4, section 7.

3.8 Safety Valves. Safety valves are used in a compressed air or gas system. They must open rapidly and fully so that excessive pressure buildup can be relieved immediately to prevent damage or destruction of the system components. Although the terms safety valve and relief valve are often used **interchangeably, this is technically incorrect.** A relief valve is used with liquid systems. Since liquids are virtually incompressible, a relief valve is designed to open gradually as the venting of a small amount of liquid is often sufficient to relieve excessive pressure throughout the system. There is one class of valve known as a safety-relief valve that can be used as either type depending upon internal adjustments. Safety valves are found in interstages, air receivers, and between a positive displacement compressor and any shutoff valve.

4 CONTROLS. Control systems for air compressors vary from the relatively simple to the extremely sophisticated. The simpler control systems, through the use of sensors, monitor the performance of the equipment and, through the

use of lights and/or audible signals, alert an operator that some variable is outside the normal operating range. Most systems automatically initiate a shutdown procedure under certain conditions to prevent equipment damage. With increasing use of remote,unattended compressor installations, the demand for the highest degree of protection and reliability has brought about many advancements and lessened the need for operator involvement. Many control systems provide a completely automatic sequence for starting, operating, and shutdown of compressors. The more advanced control systems are able to optimize equipment efficiency by controlling one or more variables to obtain a specified level of performance.

5 COOLING WATER TREATMENT. Cooling water systems are used in compressed air plants to remove heat from engines, air compressors, refrigeration condensers, intercoolers, and aftercoolers. These cooling systems are classified as either once-through or recirculating. Once-through systems often require nothing more than chlorination to prevent biological fouling of heat exchangers. Treatment is more critical in open recirculating systems because of solids buildup due to evaporation. As hardness and other solids increase, probability of mineral scale formation in heat exchangers increases. To combat scale damage, chemical additives are used to keep scale-forming salts in solution. Dissolved oxygen and carbon dioxide are prime corrosion developers. Corrosion control is provided by addition of inhibitors. Slime accumulation and fouling may be prevented by the addition of chlorine or other biocides. Solids concentration is controlled by blowdown. More detailed information on cooling water treatment is contained in the proposed publication, NAVFAC MO-225, Industrial Water Treatment.

Section 2. OPERATION AND MAINTENANCE RESPONSIBILITIES

1 OPERATION. Operation includes startup, normal operation, emergency operation, and shutdown of plant equipment. Good operation is safe, reliable, and economical. Operators and operator supervisors are responsible for safe and efficient operation of equipment. Follow these basic rules of good operation.

- All operators should be thoroughly familiar with the equipment and systems they operate. Carefully study drawings, diagrams, instruction manuals, special operation procedures, and emergency procedures. Know the location, method of operation, and function of all valves, switches, electrical controls, and other control devices.

- Perform work assignments in a safe manner in accordance with approved operating procedures. Use available protective safety clothing and equipment.

- Operate equipment and systems economically, safely, and reliably.

- Teamwork and cooperation are essential.

- Be alert and concentrate on your work. Errors and forgetfulness can cause serious personnel injuries and costly damage to equipment.

2 DISASTER CONTROL. Disaster control includes the prevention, minimization, and correction of operational and emergency casualties to plant facilities and installations. Sound design, careful inspection, and effective organization and training of plant personnel are part of a disaster control program. All plant personnel are responsible for disaster control as follows:

(a) The responsibilities of the operators are:

- Operating the plant equipment in a safe and reliable manner

- Handling emergencies and casualties effectively using approved procedures

- Reporting immediately to their supervisors any equipment defects or operational deficiencies

(b) The responsibilities of the maintenance personnel are:

- Maintaining the equipment in good condition at all times

- Making quick effective repairs when equipment breakdowns occur

(c) The responsibilities of the supervisory and engineering personnel are:

- Selection of competent personnel

- Preparation and supervision of adequate personnel training programs

- Preparation and supervision of an adequate plant maintenance, housekeeping, and inspection program

- Competent design and installation of all plant equipment

- Preparation and supervision of normal operating procedures that are safe, reliable, and economical

- Preparation and supervision of emergency and casualty procedures

- Preparation and procurement of training aids, system diagrams, and manufacturers' manuals for the training and guidance of operating and maintenance personnel

- Preparation and supervision of a periodic test and inspection program for all plant safety devices, fire fighting equipment, and other emergency equipment

3 OPERATOR MAINTENANCE. Operator maintenance is the necessary routine, recurring maintenance work performed by the operators to keep the equipment operating at its designed capacity and efficiency.

3.1 Responsibilities. The operator is an important member of the maintenance team. A well-informed and responsible operator performs the following duties:

- Keeps equipment in service for maximum periods

- Detects any flaws so that equipment is removed from service in time to prevent serious damage

- Performs minor repairs on equipment removed from service to minimize down time

3.2 Duties. Everyone in the operating chain should be aware of the following conditions.

(a) Cleanliness. Dirt is the principal cause of equipment failure and should be removed immediately by the operator.

(b) Lubrication. Any two surfaces brought together develop friction. When not properly lubricated, these surfaces wear down, change clearances, and cause equipment breakdowns.

(c) Temperature Change. Any unusual temperature change which the operator cannot correct should be reported immediately to the plant supervisor. When the temperature of a piece of equipment rises rapidly, immediately shut it down.

(d) Vibration. Vibration is a major source of equipment failure., Equipment not properly secured will vibrate. This vibration causes loosening of components and possible misalignment of parts, leading to more serious problems. The operator, in making rounds, should check the bearings,

compressor housing, and motor casing for any unusual sound, vibration, or motion. Take immediate action to correct any problems.

4 PREVENTIVE MAINTENANCE. Preventive maintenance (PM) is a system of routine inspections of equipment recorded for future reference on inspection records. Its purpose is to anticipate and prevent possible equipment failures by making periodic inspections and minor repairs in advance of major operating difficulties.

4.1 Responsibilities. PM is the responsibility of the operators and specified maintenance crews. The operator is expected to do as much maintenance as his technical abilities, tools, and time allows. Specifically assigned maintenance crews work on equipment requiring no operator, or where the work to be done is beyond the scope of the operator.

4.2 Scheduling. Scheduling PM is the responsibility of the plant supervisor. Maintain a record card for each major piece of equipment with entries of the PM schedule, inspections, and operation. See NAVFAC MO-322, Inspection of Shore Facilities, for more detailed information.

5 BREAKDOWN MAINTENANCE. Breakdown maintenance is the emergency repair of inoperable equipment performed by operators or maintenance crews. The plant and maintenance supervisors are responsible for emergency repairs. The Utility and Maintenance Shops should develop a coordinated plan to efficiently handle emergency breakdowns.

5.1 Troubleshooting. Troubleshooting is a means of locating the source of trouble when problems occur so that repairs can be made. Compressor manufacturers will normally provide troubleshooting charts for their equipment. These charts can be very helpful in diagnosing problems. Table l-2 is an example of a typical, but partial, troubleshooting chart. This troubleshooting table is not meant to be a complete source of information. It is a composite list developed from the manufacturers of various types of compressors and compressor system components. The list contains some commonly found problems, possible causes, and remedies.

6 COMPRESSED AIR SYSTEM LEAKS. A malfunction which may affect the demand upon a compressed air plant is a loss of air within the distribution system. A discussion of the evaluation of losses in compressed air systems is presented in appendix 8.

TABLE 1-2. Troubleshooting Chart

Problem	Possible Cause	Remedy
Compressor unit will not start	No power to motor.	Turn on power.
	Unloaders not operating.	Repair unloaders.
		Repair or readjust controls.
	Obstruction to rotation.	Remove obstruction.
Motor overheating	Discharge pressure above rating.	Readjust control.
	Unloader setting incorrect.	Readjust unloader.
	Inlet filter clogged.	Clean or replace filter.
Overheating of compressor parts	Discharge pressure above rating.	Lower discharge pressure.
	Intake filter clogged.	Clean.
	Worn or broken valves.	Replace.
	Leaking gaskets.	Replace.
	Unloader or control defective.	Replace.
	Unloader setting wrong.	Correct.
	Compressor components worn or broken.	Replace.
	Cylinder head, intercooler dirty.	Clean.
	Insufficient cooling water.	Increase quantity of cooling water.
	V-belt or coupling misalignment.	Realign components.
	Bearings too tight.	Adjust bearings.
	Oil level too high.	Correct oil level.

TABLE 1-2. Troubleshooting Chart (Continued)

Problem	Possible Cause	Remedy
Oveheating of compressor parts (continued)	Lubrication inadequate.	Correct oil level.
		Correct oil pressure.
		Ensure correct oil viscosity is being used.
	Ambient temperature too high.	Lower ambient temperature.
		Increase ventilation.
	Valves dirty.	Clean valves.
	Belts too tight.	Readjust belt tension.
	Packings too tight.	Readjust packings.
Delivery of air less than rated capacity	System leaks excessive.	Stop leaks.
	Intake filter clogged.	Clean or replace filter as applicable.
	Valves worn or broken.	Replace worn or broken valves.
	Belts slipping.	Tighten.
	Speed lower than rating.	Increase speed.
	Compressor components worn or broken.	Replace.
	Control device inoperative or maladjusted.	Repair or adjust control device.
	Water quantity insufficient.	Increase water quantity.
	Inlet temperature too high.	Check water quantity and temperature at inter-cooler.
Excessive vibration of compressor	Mounting bolts loose.	Tighten mounting bolts.

TABLE 1-2. Troubleshooting Chart (Continued)

Problem	Possible Cause	Remedy
Excessive vibration of compressor (continued)	Misalignment of belt pulleys or drive coupling.	Realign as necessary.
	Bearings out of adjustment or excessively worn.	Adjust or replace bearings.
Outlet water temperature above normal	Cylinder, head, or intercooler dirty.	Clean compressor system parts.
	Water quantity insufficient.	Increase cooling water supply.
	Compressor speed too high.	Slow down compressor.
Compressor noisy or knocks	Discharge pressure above rating.	Lower discharge pressure.
	Belts slipping.	Readjust belts.
	V-belts or coupling misaligned.	Realign.
	Pulley or flywheel loose.	Tighten pulley or flywheel mountings.
	Drive motor or compressor mounting bolts loose.	Tighten mounting bolts.
	Lubrication inadequate.	Increase oil level or pressure.
		Use correct oil viscosity.
	Intercooler vibrating.	Check for loose mounting hardware.
Operating cycle lasts too long	Discharge pressure above rating.	Readjust control.
	Worn or broken internal compressor parts.	Replace worn or broken, parts.
	Unloader or control device defective.	Replace defective device

TABLE 1-2. Troubleshooting Chart (Continued)

Problem	Possible Cause	Remedy
Air receiver pressure above normal	Unloader or control defective.	Repair or replace defective parts.
	Unloader setting wrong.	Correct unloader setting.
	Leaks in control air piping.	Stop leaks.
	Control air line clogged.	Unclog control air lines.
Intercooler pressure above normal	Valves worn or broken.	Replace valves.
	Valves not seated or incorrectly located.	Reseat or relocate valves.
	Unloader setting wrong.	Correct unloader setting.
	Intercooler passages clogged.	Clean intercooler.
	Insufficient water.	Increase water supply.
Intercooler pressure below normal	System demand exceeds rating.	Upgrade compressor.
	System leakage excessive.	Stop leakage.
	Intake filter clogged.	Clean or replace air filter as applicable.
	Valves worn or broken.	Replace worn or broken valves.
	Unloader setting wrong.	Correct unloader setting.
Air in receiver too moist	Moisture separator not draining.	Unclog or repair separator drain.
	Air coolers ineffective.	Check temperature of cooler at discharge port.
	Inadequate cooling waterflow rate.	Check cooling waterflow pressure.

TABLE 1-2. Troubleshooting Chart (Continued)

Problem	Possible Cause	Remedy
Oil in air receiver	Clogged air filter.	Clean or replace air filter element.
	Broken piston and/or rings.	Replace broken parts.
	Oil level too high.	Correct oil level.
	Oil viscosity incorrect.	Change lubricant to proper viscosity.
	Oil wrong type.	Change lubricant to proper viscosity.
	Unloaded running time too long.	Use auto start/stop control.
Surging of distribution air	Operating at less than designed minimum flow.	Increase flow of compressor. Install surge control valve in discharge line.
Cavitation of water in cooling supply	Feedwater level too low.	Increase feedwater level in reservoir.
	Air leaks into suction piping.	Stop leaks.

CHAPTER 2. POSITIVE DISPLACEMENT COMPRESSORS

Section 1. RECIPROCATING COMPRESSORS

1 DESCRIPTION. Reciprocating air compressors are manufactured in a variety of shapes, sizes, and capacities. Single-stage machines draw air from the atmosphere and discharge it into the receiver or storage tank. Two-stage compressors (figure 2-l) bring the air up to intermediate pressure in one cylinder and to final pressure in a second cylinder. Where two or more stages are employed, the unit is defined as a multistage air compressor. Multistage compressors produce higher discharge pressures. Stationary air compressors are usually water-cooled, with the exception of small units that are air-cooled. Portable units are also usually air-cooled. Air-cooled compressors utilize finned cylinders to increase the radiating area. Compressor drives include electric motors, steam reciprocating engines, steam turbines, or internal combustion engines. Drives may be direct connected, connected through reduction gears, or belt connected. Operating and maintenance instructions for electric motors, internal combustion engines, steam engines, and steam turbine drives are contained in NAVFAC MO-205, Central Heating and Steam Electric Generating Plants.

1.1 High-Pressure Systems. Although high-pressure air compressors can compress air to pressures of approximately 100,000 pounds-force per square inch gauge (psig), in this manual discussion of high-pressure systems is limited to the 400- to 6,000-psig range. Multistage reciprocating compressors are commonly used for this service. Depending upon the discharge pressure, the compressor will have from two to five stages of compression, intercoolers between stages, and an aftercooler. Smaller compressors may be air-cooled or a combination of air- and water-cooled while larger compressors are normally water-cooled. Power for larger compressors is usually provided by electric motors, although in some installations the compressors may be powered by diesel or steam engines. In smaller compressor applications, gasoline engine drives may be provided. Power is normally transmitted from the power source to the compressor through a direct drive or V-belts. Steam engines are usually integral with the compressor. Typical applications for high-pressure air are:

- Testing and operating catapults
- Testing and launching missiles
- Torpedo workshops
- Wind tunnels
- Ammunition depots

2 SAFETY PRECAUTIONS.

2.1 Explosive Hazards. Although compressed air at low or medium pressures is dangerous if carelessly handled, the dangers associated with high-pressure systems are of much greater consequence. Serious explosions, complete destruction of facilities, and heavy loss of life have been attributed to unsafe practices involving high-pressure compressed air systems. A serious

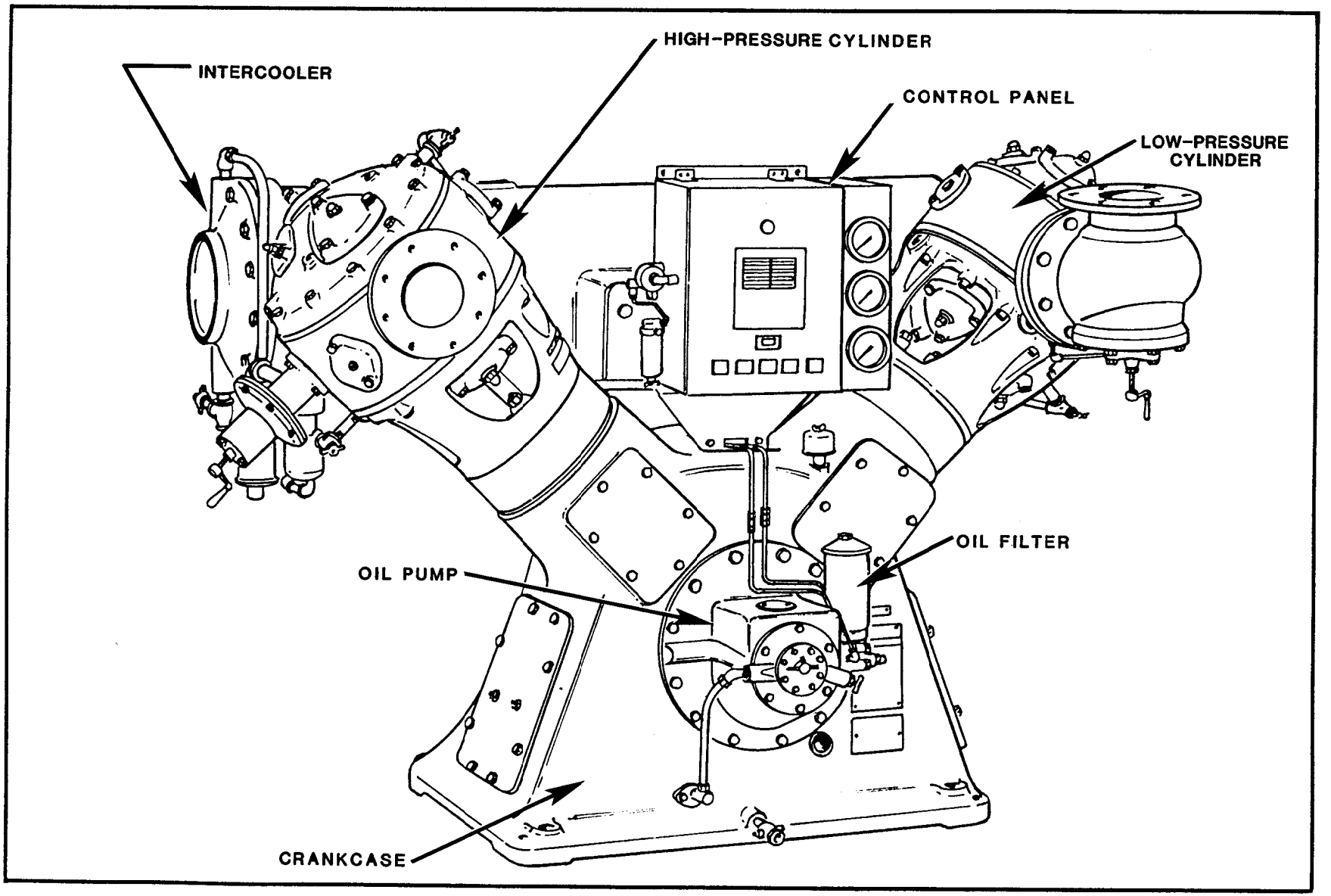

FIGURE 2-1. Two-Cylinder, Two-Stage, V-Type Air Compressor

potential danger exists in these systems whenever high-pressure air is suddenly admitted into pockets,or dead ends, that are at or near atmospheric pressure. The air temperature in the confined space is raised to the ignition point of any flammable material that may be present. This autoignition or diesel action has been identified as the cause of several major disasters associated with high-pressure air systems. Such an explosion may set up shock waves that can travel throughout the compressed air system and possibly cause explosions at remote points. Under these conditions, even a small quantity of oil residue, a smear of grease, or a small cotton thread may be sufficient to cause an explosion. Because of the serious nature of these problems, it is extremely important that competent personnel,experienced in high-pressure systems, be employed for maintaining and operating such equipment.

2.2 Preventive Measures. As a safeguard against explosions in high-pressure compressed air systems, a number of precautions should be taken.

(a) Use of Slow-Opening Valves. These valves are used in pocketed spaces such as lines to gauges and regulators to prevent a sudden pressure rise.

(b) Elimination of Flame Arrestors. Flame arrestors, sometimes used to prevent the spread of flame in pipelines, SHOULD NOT be installed in high-pressure air systems as they may create additional hazards.

(c) Pipe Coloring. High-pressure air lines are identified with a painted light gray band and adjoining light green arrowhead pointing in the normal flow direction. These markings are placed on high-pressure air lines at each point where piping enters or emerges from a wall and immediately adjacent to all valves, regulators, check valves, strainers, and other components.

(d) Location of Equipment. High-pressure air storage and dryer cylinders are isolated from other facilities as a precaution against damage that could result from rupture of the cylinders.

(e) System Tests. Before putting a high-pressure system into operation, the required testing of NAVFAC DM-3.5, Compressed Air and Vacuum Systems, must be accomplished by competent personnel with an engineer responsible for safety.

3 STARTUP.

3.1 Prestart Inspection. Carefully inspect the compressor installation to ensure the following prestart requirements are fulfilled.

(a) Verify all installation and repair work has been completed.

(b) Ensure system has been cleaned and tested for leaks.

(c) Ensure interstage and discharge safety valves are operating properly.

(d) Ensure compressor and drive are lubricated in accordance with the manufacturers' instructions. On units fitted with a forced mechanical lubricator, pump or crank by hand to see that the oil is getting to all parts requiring lubrication.

3.2 Startup Procedure for Motor-Driven Compressors. Proceed as follows:

(a) Open all shutoff valves between compressor and receiver.

(b) Make sure compressor is unloaded. Consult the manufacturer's instructions for procedure.

(c) Turn on cooling water, if provided. Thoroughly vent cylinder jackets and coolers if vents are provided.

(d) Turn compressor over by hand to see that all parts are free.

(e) Start compressor motor. When up to speed, apply load if machine is running smoothly.

3.3 Startup Procedure for Steam-Driven Reciprocating Compressors. Proceed as follows:

(a) Open all shutoff valves between compressor and receiver.

(b) Turn on cooling water services ensuring cylinder jackets and coolers are thoroughly vented.

(c) Make sure compressor is unloaded by opening the separator drain valve or the compressor cylinder indicator cocks.

(d) Open valve chest, exhaust, and steam cylinder drain valves.

(e) Open the drain valve on the steam admission line above the throttle valve. When all condensation has drained from the line and the pipe is hot, close the drain valve until it is open approximately one-fourth of a turn.

(f) Crack open the throttle valve and allow the steam cylinder to warm up.

(g) Open steam exhaust valve.

(h) Slowly open the throttle valve and allow the governor to take over control.

(i) Close the drain valves when steam discharge is free of condensate.

(j) When the compressor is up to speed, slowly build up the load.

3.4 Startup Procedure for New or Overhauled Compressors. When starting a new compressor, or one that has been overhauled, allow the compressor to run unloaded for 1 or 2 hours to give the running surfaces a polished finish. Periodically check for overheating. Build up load gradually over a period of several hours. After a few days of operation, shut down compressor and recheck all cylinder head, valve cover, cylinder flange, shaft cover, and foundation bolts for tightness.

4 NORMAL OPERATION. While the system is operating, perform the following tasks.

(a) Watch for irregular compressor performance; excessive vibration; and overheating of bearings, motors, and packing.

(b) Maintain proper lubricating oil levels.

(c) Drain intercooler and aftercooler separators as necessary.

(d) If automatic drainers are provided, check their operation.

(e) Check temperatures and pressures of cooling water, compressed air, and lubricating oil regularly.

5 SHUTDOWN. Proceed as follows:

(a) Unload the compressor before stopping the drive.

(b) Drain separators, steam cylinders, and turbines.

(c) Shut off cooling water supply if an automatic shutoff valve is not provided.

(d) If the compressor might be subjected to freezing temperatures while shutdown, thoroughly drain cylinder jackets, coolers, and drain traps.

5.1 Extended Shutdown. Any compressor taken out of service for an extended period will deteriorate rapidly from rust and corrosion if not properly protected. The manufacturer should be contacted to obtain the recommended procedure for protecting the equipment. Take the following precautions in addition to those stated in paragraph 5(a) through 5(d).

(a) Drain and refill the crankcase with a preservative oil.

(b) Operate the machine without pressure for no less than 15 minutes. This allows thorough distribution of the oil and elimination of any crankcase condensate.

(c) While the machine is running, spray a fog of preservative oil into the compressor intake.

(d) Remove piston rod packing and oil wiper rings from the rod or corrosion of the piston rod may result. Coat the piston rod and oil wiper rings with grease and wrap them in waterproof paper.

(e) Tape or plug all openings to keep out moisture.

(f) Relieve V-belts of tension.

(g) Drain the receiver and aftercooler.

(h) Drain the aftercooler cooling water, if used.

(i) Follow the prime mover manufacturer's instructions for the method of protection during extended shutdown.

6 OPERATIONAL PREVENTIVE MAINTENANCE. Operational preventive maintenance includes the following tasks.

(a) Keep daily operating logs that record pressures and temperatures of air and water in the compressor, intercoolers and aftercoolers, and of compressor lubricating oil. Deviations from normal values indicate the corrective action that must be taken to return the system to normal and to prevent damage to the equipment from insufficient lubrication or inadequate cooling.

(b) The operating log also helps in detecting valve troubles. On two-stage compressors, low intercooler pressure indicates malfunctioning of the low-pressure cylinder valves, and high intercooler pressure may be due to improper operation of the high-pressure cylinder valves. Locate defective valve by feeling the valve cover plates and determining which is the hottest. Leaking high-pressure suction valves cause the intercooler pressure to fluctuate above normal values. Leaking high-pressure discharge valves cause the intercooler pressure to build up steadily until the safety valve releases it. Low-pressure discharge valves that leak cause intercooler pressure to fluctuate below normal intercooler pressure.

(c) Keep compressor clean at all times. Wipe the machine daily with a cloth. Dirt on the machine will eventually work its way into the lubricating system. On air-cooled compressors, dirt accumulations form an insulating blanket causing increased temperatures within the machine and excessive wear on moving parts.

(d) Clean intake air filter regularly to prevent atmospheric dust from entering the compressor cylinders.

(e) Keep piston rod packing tight enough to prevent air leakage, but do not overtighten. Overtightening causes excessive packing wear and scoring of the piston rod.

7 PREVENTIVE MAINTENANCE INSPECTION. The following inspection schedules are adequate for average installations.

7.1 Daily Inspection. Inspect the compressor daily for the following conditions:

(a) Unusual noise or vibration

(b) Abnormal pressures or temperatures of compressed air, cooling water, and lubricating oil

(c) Proper unloader operation

(d) Abnormal stuffing box temperatures

(e) Abnormal bearing temperatures

(f) Correct lubricating oil levels

7.2 Quarterly Inspection. Inspect the compressor every 3 months for the following conditions:

(a) Wear and dirt on, and proper seating of, compressor valves

(b) Operation of all safety valves

(c) Wear of packing and scoring of piston rods

(d) Sludge accumulations in crankcase

(e) Tightness of cylinder head bolts

(f) Tension, wear, and deterioration of belts

(g) Wear of connecting rods and crossheads

(h) Wear of, and dirt in, bearings

(i) Operation of lubricators and oil cups

7.3 Annual Inspection. Repeat the quarterly inspection outlined above and inspect for the following conditions:

(a) Wear, scoring, and corrosion of, and dirt in,cylinders

(b) Leakage, wear, scoring, and security to the piston **rod of pistons;** head clearances

(c) Damage, wear, and tightness of, and dirt in, piston rings

(d) Wear at packing glands of piston rods and security of **piston rods to** crosshead and piston

(e) Wear and proper operation of crankcase and crankshaft bearings

(f) Wear and proper operation of crossheads, crosshead guides,wedges, and pins

(g) Security to shaft of flywheel; wear and dirt on flywheel bearings

(h) Alignment of compressor with drive

8 MAINTENANCE.

8.1 Lubrication.

WARNING

Do not gasoline, kerosene, or other low flashpoint solvents. A serious explosion may result.

Establish a lubrication schedule for air compressors. Normal oil levels must be maintained at all times. Use only lubricants recommended by the manufacturer. Frequency of oil changes is dependent upon severity of service and atmospheric dust and dirt. **The time for oil changes can best be** determined by the physical **condition of the oil. When changing oil, clean the** inside of the crankcase by **wiping with clean, lint-free rags. If this is not** possible, use a good grade **of flushing oil to remove any settled particles.**

8.2 Packing. When replacing **fibrous packing, thoroughly clean the stuffing** box of old packing and grease. Cover each piece of new packing with the recommended lubricant. Separate the new rings at the split joint to place them over the shaft. Place one ring of packing at a time in the stuffing box and tamp firmly in place. Stagger the joints of each ring so they will not be in line. After the last ring is in place, assemble the gland and tighten the nuts evenly until snug. After a few minutes, loosen the nuts and retighten them finger-tight.

8.3 Cleaning.

WARNING

Do not use gasoline, kerosene, or other low flashpoint solvents. A serious explosion may result.

Cylinder jackets of water-cooled compressors should be cleaned annually with water. Dirt accumulations interfere with water circulation. Cleaning can be accomplished using a small hose nozzle to play water into the jackets. On compressors fitted with mechanical lubricators, cylinders may be cleaned with a nonflammable cleaning fluid.

8.4 Valves. Replace all defective valve parts as required. When a valve disk or plate wears to less than one-half its original thickness, it should be replaced. Valve seats may be resurfaced by lapping or regrinding. On some valve designs it is necessary to check the lift after resurfacing. If the lift is found to be more than that recommended by the manufacturer, the bumper must be cut down an equal amount. Failure to do this results in more rapid valve and spring wear. Carbon deposits should be removed and the valve assembly washed in nonflammable cleaning fluid. Before replacing valves, make sure the valve seat and cover plate gaskets are in good condition. If any defects are found, replace the gaskets. Make sure the valve is returned to

the same port from which it was removed. Carefully follow the manufacturer's instructions for valve removal and replacement.

8.5 Piston Rings. When replacing worn piston rings, the new rings must be tried in the cylinder for fit. If the cylinder wall is badly scored or out of round, rebore the cylinder, or if cylinder liners are fitted, replace them. If necessary to file for end clearance, take care to file the ends parallel. Clean the ring grooves and remove any carbon deposits before installing the new rings. To install new rings, place several metal strips not more than 0.032-inch thick between the piston and rings (figure 2-2). Slide the new rings over these strips until they are centered over the grooves and then pull out the strips. Make sure the ring is free by rotating it in its groove. Stagger the ring gaps of succeeding rings so they are not in line. Use a ring clamping device when reinstalling the piston. If this is not available, wire the rings tightly so they enter the bore easily. Consult the manufacturer's instructions for carbon ring replacement.

8.5.1 Piston End Clearance. Always check piston end clearance after replacing pistons or after adjustment or replacement of main, crankpin, wristpin, or crosshead bearings. Consult the manufacturer's instructions for proper clearances and method of clearance adjustment. To measure piston end clearance, insert a length of l/B-inch diameter solder into the cylinder through a valve port and turn the compressor over by hand so that the piston moves to the end of its stroke. Remove the compressed solder and measure its thickness to determine the piston end clearance.

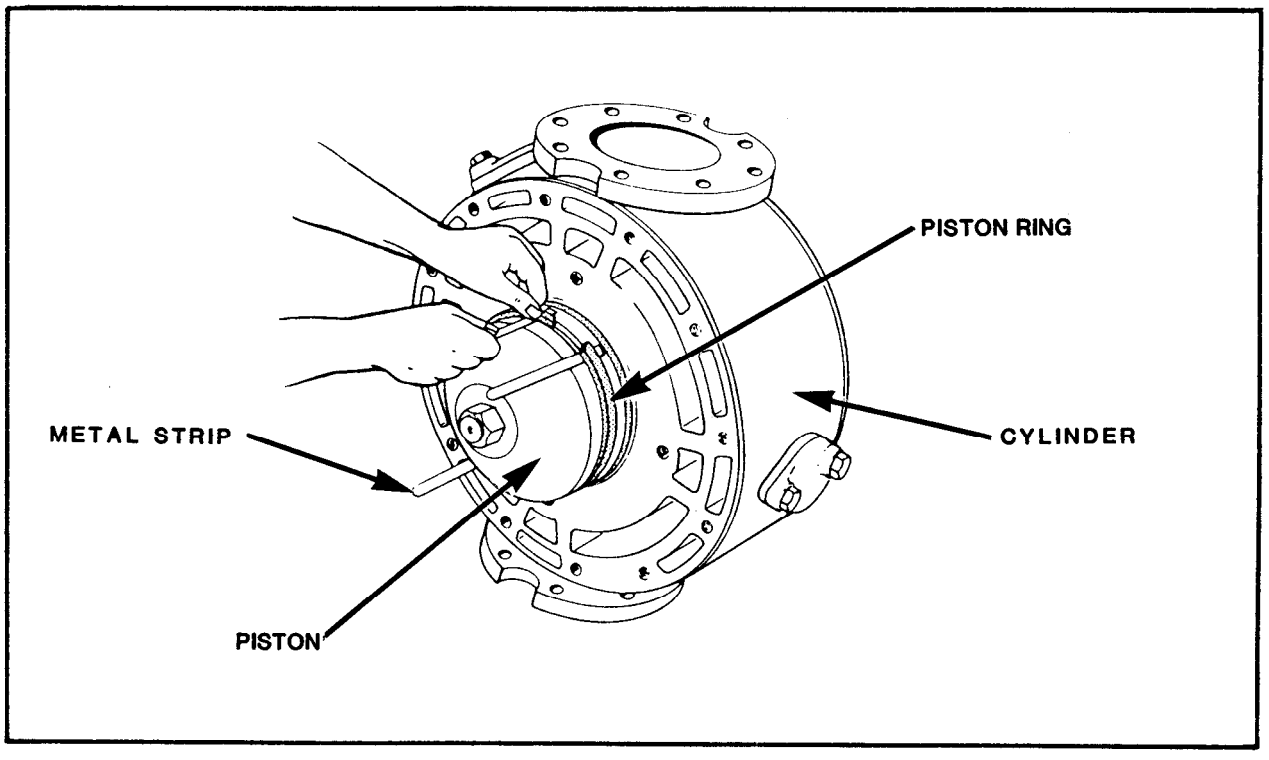

FIGURE 2-2. Installing Piston Rings

8.6 Bearings. Sleeve type main bearings are adjusted by removing or adding metal shims between the cap and body of the bearing housing. The same number of shims should be added or removed from each side of the bearing. Make sure caps are tightly secured so they cannot work loose. Do not overtighten as this causes overheating of the bearing. Consult the manufacturer's instructions for adjustment of tapered roller main bearings.

8.6.1 Horizontal Compressor Bearings. Many horizontal compressors have wedge adjusting crosshead and crankpin bearings (figure 2-3). Adjustment is made by tightening or loosening the adjusting screws. Do not overtighten the bearings. A tight fit at the crosshead bearing causes the crosshead to rock, damaging the crosshead guides and shoes.

8.6.2 Vertical Compressor Bearings. Vertical compressors are usually fitted with automotive type crankpin bearings with babbitted inserts (figure 2-4). These bearings are not adjustable and must be replaced. When replacing bearing inserts or bushings, make sure all parts are thoroughly clean and that the oil hole is aligned with the oil hole in the connecting rod.

8.7 V-Belt Drives. Adjust tension or replace V-belts as required. When one or more belts in a set require replacement, replace the entire set with matched belts. If this is not done, the new unstretched belts, being shorter than the old belts, will carry most of the load and will be subjected to undue strain. Removed belts that appear to be in a serviceable condition may be kept for emergency use.

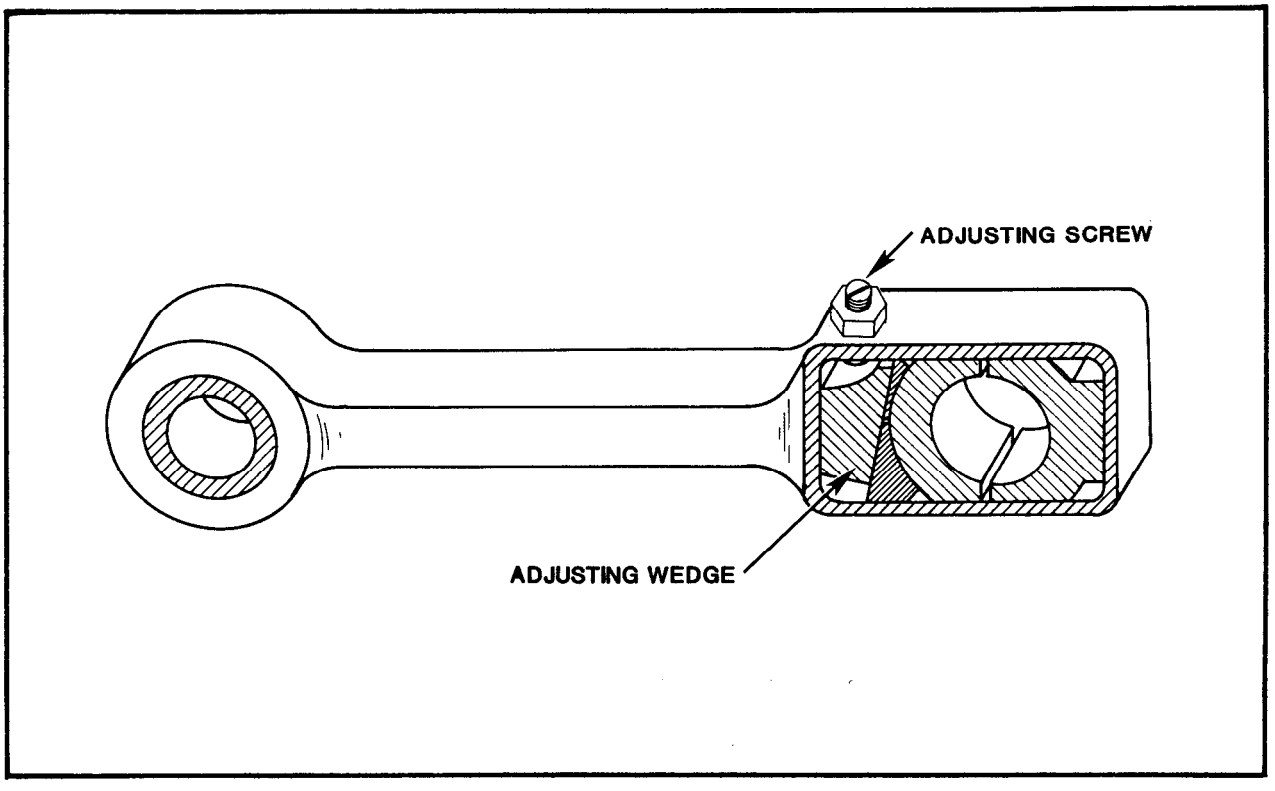

FIGURE 2-3. Connecting Rod With Wedge Adjusting Bearings

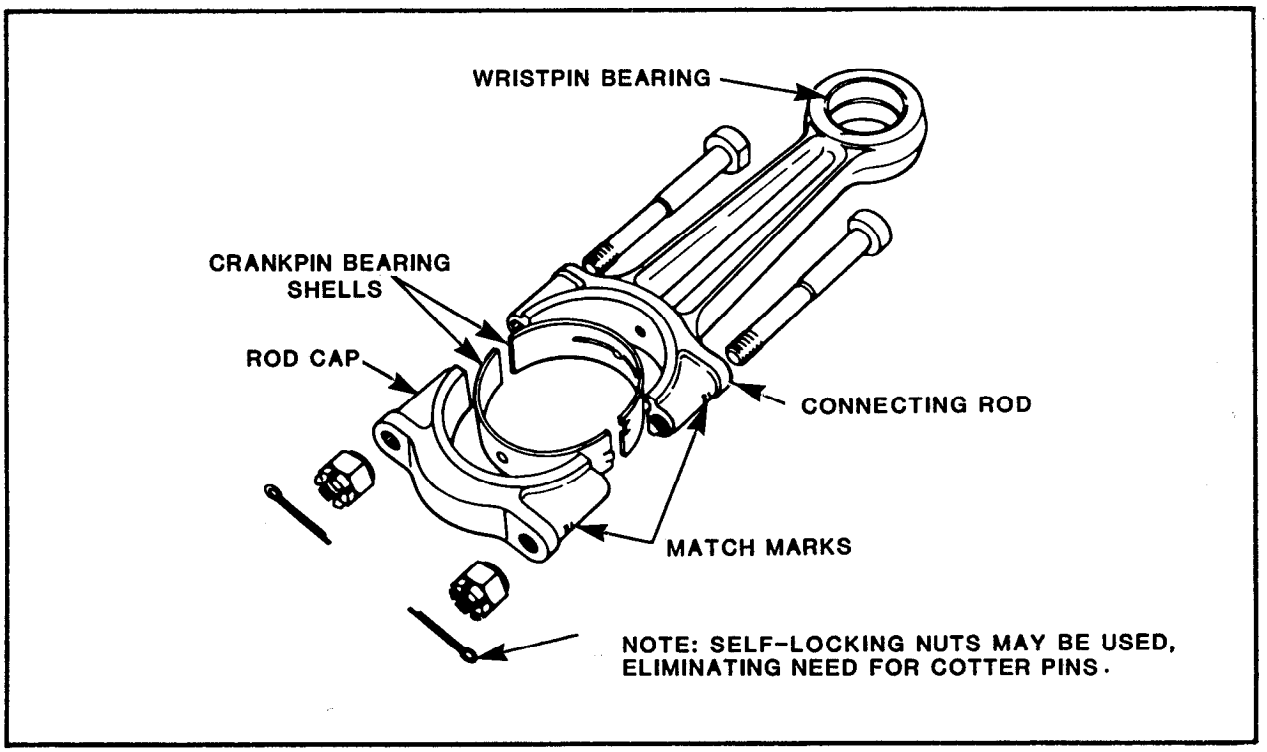

FIGURE 2-4. Connecting Rod Assembly

8.7.1 Belt Sheaves. Check condition of belt sheaves when installing new belts. If grooves are worn, regroove or replace the sheaves. Worn grooves cause rapid belt wear. Sheaves should be clean and free of oil or grease. Belts should be installed by hand and not pried into place. After all belts have been installed, adjust the belt tensions (figure 2-5). Proper tension is indicated when each belt can be deflected one belt thickness for each 48 inches of unsupported length. After belts have been tensioned, check sheave alignment by placing a straight edge across the faces of the driving and driven sheaves. The straight edge should contact both sheaves squarely.

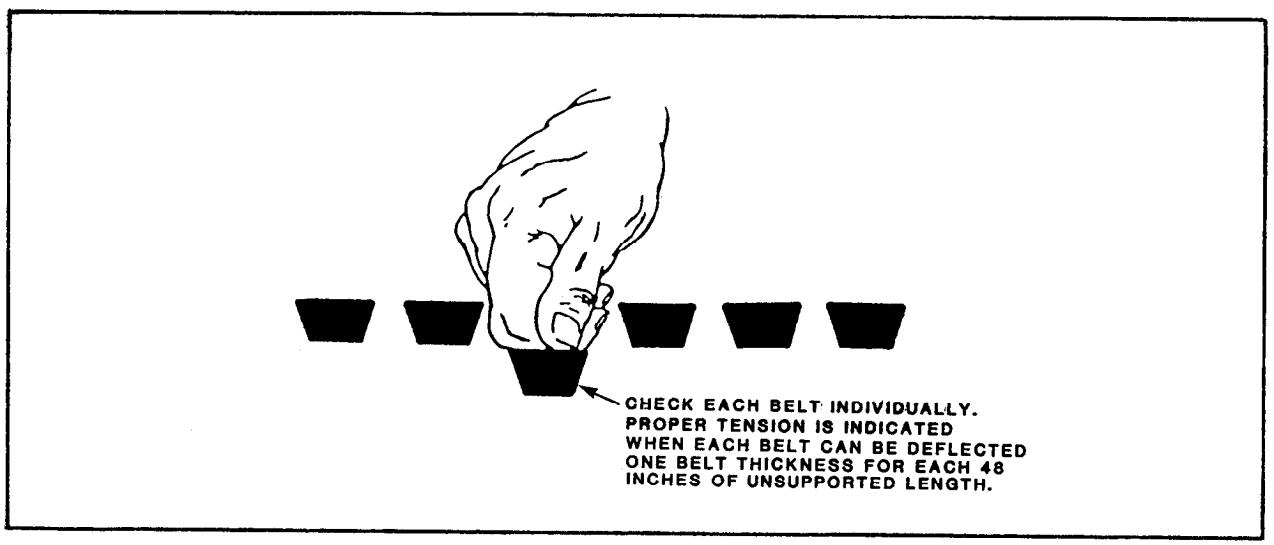

FIGURE 2-5. Method of Checking the Tension of V-Belts

INTENTIONALLY LEFT BLANK

Section 2. ROTARY SLIDING VANE COMPRESSORS

1 DESCRIPTION. Rotary sliding vane compressors (figures 2-6 and 2-7) consist of a cylindrical casing in which an eccentrically mounted rotor is located. The rotor is fitted with blades that are free to slide in and out of longitudinal slots. In operation, the blades are forced outward by centrifugal force and form compartments where air is compressed. Each compartment varies from a maximum volume on the suction side of the revolution to a minimum volume on the compression half of the revolution. This gives a positive displacement type suction and pressure effect. Rotary sliding vane machines are normally directly connected to electric motors or internal combustion engines. Operating and maintenance instructions for electric motors and internal combustion engines are contained in NAVFAC MO-205, Central Heating and Steam Electric Generating Plants.

2 STARTUP.

2.1 Prestart Inspection. Carefully inspect the compressor installation to ensure the following prestart requirements are fulfilled.

(a) All installation and repair work has been completed.

(b) Installation has been cleaned and tested for leaks.

(c) Alignment has been checked.

(d) Unit is properly lubricated; crank lubricator by hand to clear lines of air and to assure oil supply for startup.

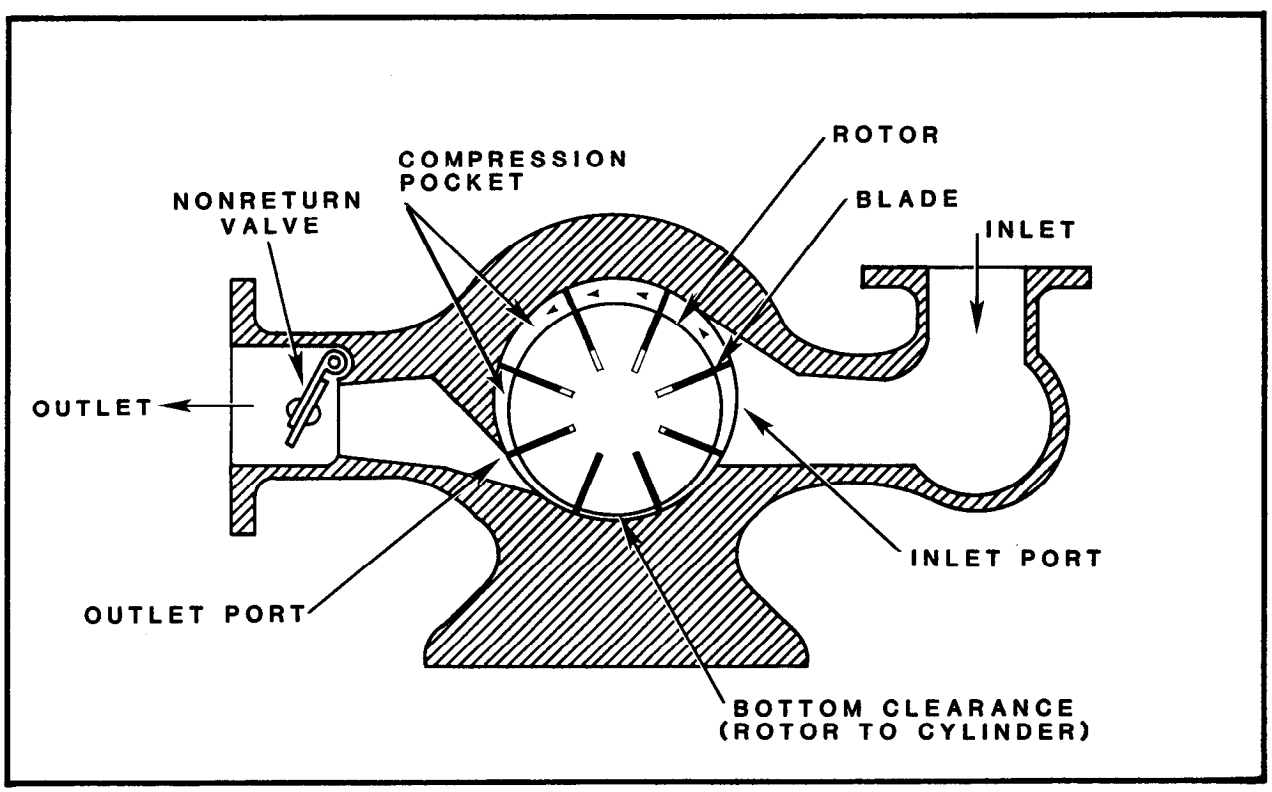

FIGURE 2-6. Cross Section of Rotary Sliding Vane Compressor

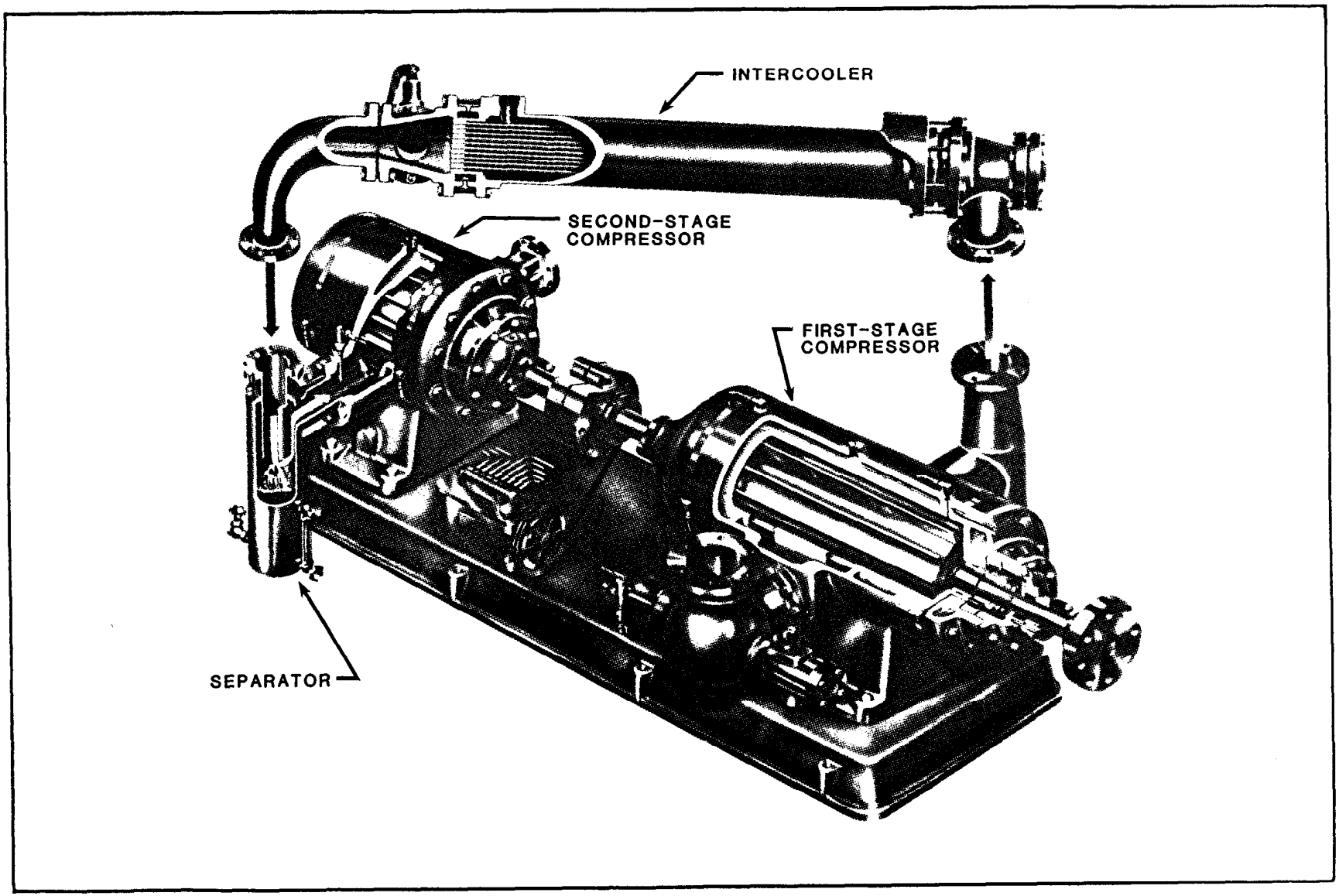

FIGURE 2-7. Cutaway View of Two-Stage, Rotary Sliding Vane Compressor

(e) Compressor turns freely by hand.

(f) Direction of motor rotation is correct.

(g) Unloader operation has been checked.

(h) Safety valve operation has been checked.

2.2 Startup. Proceed as follows:

(a) Open discharge shutoff valve.

(b) Turn on cooling water supply. Thoroughly vent jackets and intercooler.

(c) Set regulating device to unloaded position.

(d) Start motor and bring unit up to speed.

(e) Check and adjust lubricator feed rate in accordance with manufacturer's instructions.

(f) Load the compressor if machine is running smoothly.

3 NORMAL OPERATION. While the system is operating, perform the following tasks.

(a) Maintain proper lubricating oil levels.

(b) Drain oil separator and receiver.

(c) Check automatic traps for proper operation.

(d) Check compressed air and cooling water pressures and temperatures daily.

4 SHUTDOWN. Proceed as follows:

(a) Unload compressor.

(b) Stop motor.

(c) Shut off cooling water supply.

(d) If the compressor is to be subjected to freezing temperatures, thoroughly drain cylinder jackets, coolers, and drain traps.

4.1 Extended Shutdown. Rotary sliding vane compressors should not be left idle for long periods of time. Rust and corrosion will cause rapid deterioration if the machine is not properly protected. Rotor blade expansion, caused by the absorption of moisture, is another potential problem. Observation of the following procedure should adequately provide the proper protection.

(a) Every 2 weeks, turn the compressor over by hand to distribute oil to those areas requiring lubrication, then operate the compressor for a minimum of 2 hours. This will keep the interior dry, well lubricated, and prevent absorption of moisture by the blades.

(b) Do not allow cooling water to run after shutdown. This causes internal condensation that can be absorbed by the blades.

(c) If the compressor is to be subjected to freezing temperatures, thoroughly drain cylinder jackets, coolers, and drain traps.

5 OPERATIONAL PREVENTIVE MAINTENANCE. Operational preventive maintenance includes the following tasks.

(a) Keep a daily log of compressed air and cooling water temperatures and pressures, and lubricating oil additions to detect any deviations from normal operating values. On two-stage machines, low interstage pressure indicates a malfunction in the first stage or stoppage of the intake filter. High interstage pressure may indicate that the second stage is not operating properly or that the air from the first stage is not being cooled sufficiently by the intercooler.

(b) Keep the machine clean at all times by wiping daily with a cloth. Dirt accumulations will eventually work their way into the machine and cause accelerated wear.

(c) Do not operate a compressor beyond its rated capacity. Overload operation results in overheating and damage to running surfaces.

(d) Do not overtighten packing gland. This results in rapid packing wear and shaft scoring. Gland should be pulled up finger-tight and some oil leakage should be present.

(e) Check lubricator weekly for proper drop rate.

6 PREVENTIVE MAINTENANCE INSPECTION. The following inspection schedules are adequate for average installations.

6.1 Daily Inspection. The operator shall inspect the installation daily for the following conditions:

(a) Unusual noise or vibration

(b) Abnormal pressures or temperatures

(c) Proper lubricating oil levels

(d) Abnormal stuffing box temperatures

(e) Abnormal bearing temperatures

(f) Overheating of motor

6.2 Quarterly Inspection. Inspect the compressor every 3 months for the following conditions:

(a) Operation of all safety valves

(b) Proper operation of all controls

6.3 Semiannual Inspection. Inspect for the following conditions:

(a) Alignment of the compressor to the drive

(b) On two-stage units, alignment of the outboard compressor to the inboard one

(c) Condition of packing, if provided

6.4 Annual Inspection. Once a year or more often, depending on the severity of service, dismantle the compressor and inspect for the following conditions:

(a) Bearings for wear and dirt

(b) Shaft for wear at seals

(c) Mechanical seals for damage, if they are provided

(d) Rotor blades; remove and inspect for wear

(e) Wear and scoring of cylinder bore

(f) Damage to gaskets

7 MAINTENANCE.

7.1 Rotor Blades. Rotor blades should be replaced if the blade thickness at any point is less than 85 percent of the rotor slot width; if the blade width is less than 90 percent of the rotor slot depth; or if there is any charring, splitting, or chipping on the running edge of the blades.

(a) Thoroughly clean the rotor slots when replacing or installing new blades.

(b) Thoroughly clean and oil blades before installation.

7.2 Cylinders. Thoroughly clean cylinder interior annually as follows:

(a) Blow out all oil holes ensuring they are open and free of sludge.

(b) Flush out cylinder jackets with a water hose to remove dirt accumulations.

(c) Stone rough spots on cylinder walls, cylinder heads, and rotor.

(d) When reassembling, oil each part with clean lubricating oil.

(e) Replace defective gaskets.

7.3 Bearings. Replace worn or defective bearings as required. If bearing replacement becomes necessary,the inner race may be removed from the shaft by heating it with a torch. Care must be taken to heat the inner race only and not the shaft. The inner race is shrunk onto the shaft, so that heating both parts will not free the bearing. Never attempt to pull the inner race off the shaft without heat, as damage to the shaft will result. To install a new inner race, it is necessary for it to be thoroughly heated in an oil bath to a temperature of 200°F to 300°F depending on manufacturer's instructions. It will then slip easily onto the shaft.

7.4 Clearances. Each time the compressor is inspected internally or disassembled for repair, clearances must be checked. These include clearances between the rotor and cylinder, the rotor ends and the cylinder heads, and in the bearings. Clearances must be closely held for proper operation of the compressor. Clearances are normally given on the compressor nameplate. Follow the manufacturer's instructions carefully for setting clearances.

7.5 Lubrication. Rotary sliding vane compressors are normally fitted with mechanical force-feed lubricators driven from the compressor shaft. On new compressors,or compressors that have been overhauled, feed about 25 percent more oil than normal for about 2 weeks until the compressor has been run-in. For normal operation, the feed should be adjusted to the drip rate indicated on the lubricator nameplate. Rate of flow can be observed in the sight flow indicators.

Section 3. ROTARY TWIN-LOBE COMPRESSORS

1 DESCRIPTION. Rotary twin-lobe compressors (blowers) consist of two impellers mounted on parallel shafts that rotate in opposite directions within a housing (figure 2-B). As the impellers rotate, they trap a quantity of air between themselves and the blower housing and move the air from the inlet to the discharge port. The operating principle of this type compressor is unusual since the impellers do not compress the air while moving it. Instead, as each impeller uncovers the discharge port, the pressurized air in the discharge line flows back into the compressor compressing the air between the discharge port and the next lobe of the impeller. As the impellers turn, they force this pressurized air into the discharge line and immediately start a new cycle, as shown in figure 2-B. This action takes place four times per revolution, twice for each impeller. The impellers are positioned in relation to each other by timing gears located at the end of each shaft and external to the blower housing. Rotary twin-lobe compressors (figure 2-9) are normally electric motor driven through V-belts or by direct connection. Operating and maintenance instructions for electric motors are contained in NAVFAC MO-205, Central Heating and Steam Electric Generating Plants.

2 STARTUP.

WARNING

If impellers are to be rotated, keep hands, feet, loose clothing, and foreign objects away from inlet and discharge openings, as serious personal injury or damage to equipment can occur.

WARNING

Do not operate equipment without adequate silencing devices. High noise levels may cause permanent hearing damage.

2.1 Prestart Inspection. Carefully inspect the compressor installation to ensure the following prestart requirements are fulfilled.

(a) All installation and repair work has been completed.

(b) Installation has been cleaned and tested for leaks.

(c) Alignment has been checked.

(d) Compressor and drive have been properly lubricated.

(e) Operation of safety valves has been checked.

(f) Compressor discharge valves are open.

2.2 Startup. Proceed as follows:

(a) Turn compressor over by hand to see that it turns freely.

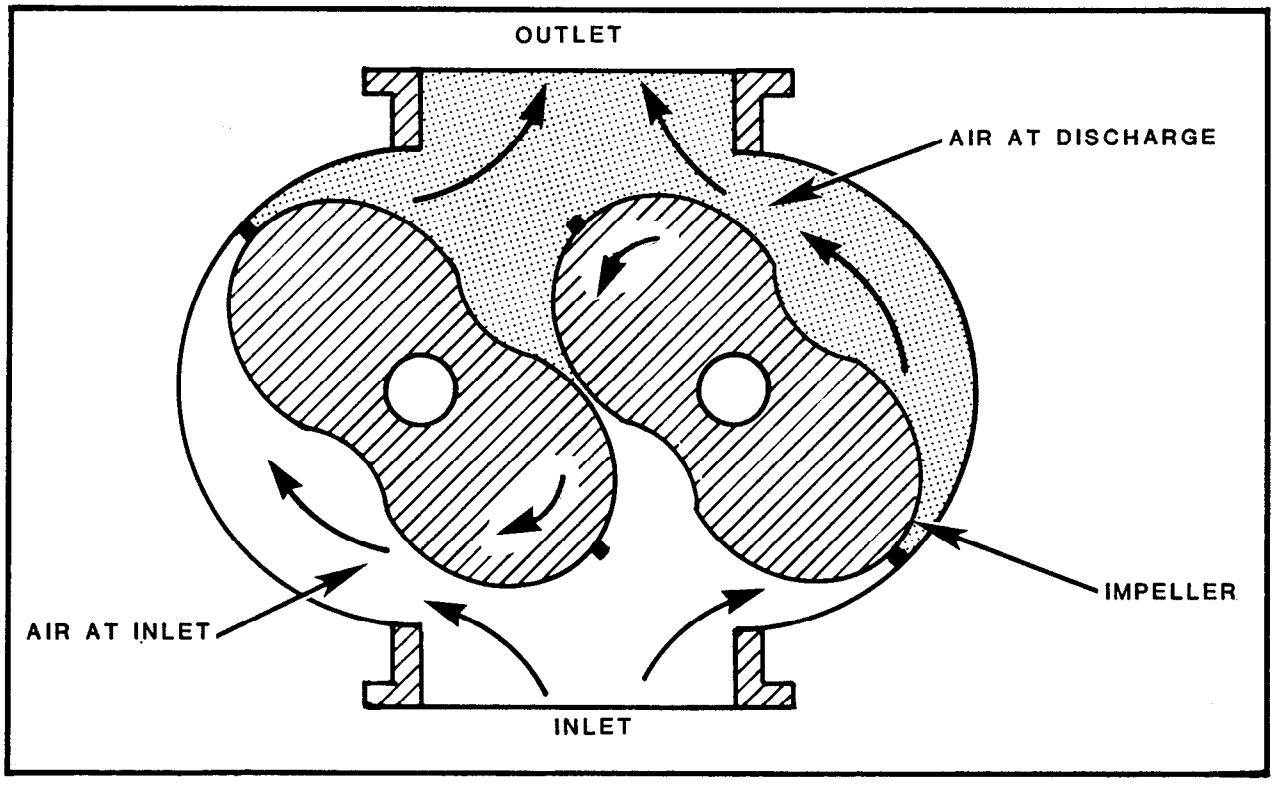

FIGURE 2-B. Impeller Arrangement of Rotary Twin-Lobe Compressor

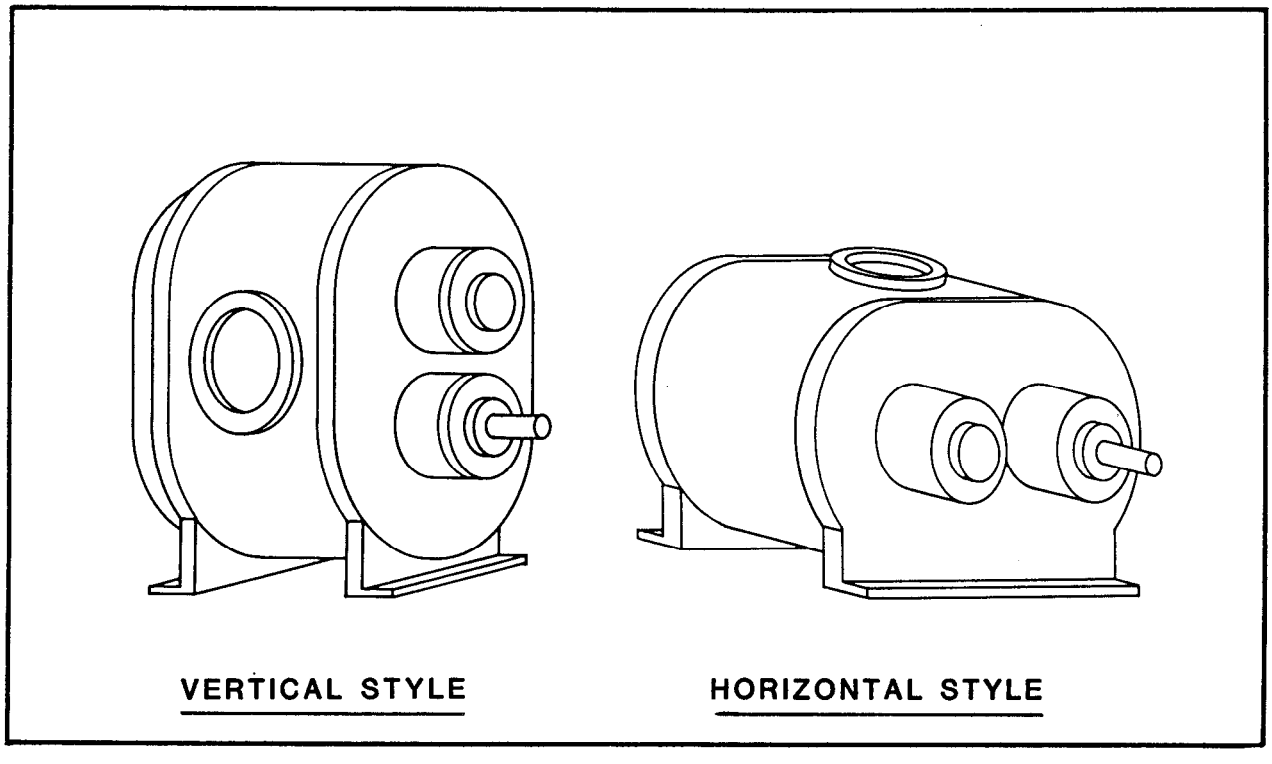

FIGURE 2-9. Rotary Twin-Lobe Compressor

(b) Check motor for correct direction of rotation.

(c) Turn on cooling water to oil cooler, if provided.

(d) Start the compressor.

3 NORMAL OPERATION. While the system is operating, perform the following tasks.

(a) Maintain correct oil levels.

(b) Check air discharge and lubricating oil pressures.

(c) Watch for irregular compressor performance and any unusual noise or vibration.

4 SHUTDOWN. When the compressor is to be out of service for an extended period, coat the impellers and the inside of the housing with a heavy oil or grease to prevent rusting and corrosion. Before returning the unit to service, thoroughly clean all oil or grease from the compressor interior.

5 OPERATIONAL PREVENTIVE MAINTENANCE. Operational preventive maintenance includes the following tasks.

(a) Operate the compressor within the rated capacity, otherwise overheating of the compressor and drive may occur.

(b) On units fitted with oil coolers, ensure that the temperature of the oil to the gears and bearings is within the limits recommended by the manufacturer.

(c) Maintain oil levels within the limits indicated on the oil level gauge. Insufficient oil will result in improper lubrication. Too much oil will cause overheating of bearings and gears.

6 PREVENTIVE MAINTENANCE INSPECTION. The following inspection schedules are adequate for average installations.

6.1 Daily Inspection. The operator shall inspect the compressor daily for the following conditions:

(a) Unusual noise or vibration

(b) Abnormal suction or discharge pressure or temperature

(c) Abnormal oil pressure when force-fed lubrication is provided

(d) Abnormal bearing temperatures

(e) Overheating of motor

(f) Oil leaks

6.2 Annual Inspection. Once a year or as required, depending on the severity of service, clean and inspect the compressor for the following conditions:

(a) Corrosion or erosion of parts

(b) Proper clearances

(c) Correct alignment

(d) Worn or broken timing gears

(e) Timing gear setting

(f) Operation and setting of safety valves

(g) Wear of shafts at seals

7 MAINTENANCE.

7.1 Lubrication. Establish a definite lubrication schedule for the compressor, and establish specific responsibilities for carrying out periodic lubrication. Frequency of lubrication and type of lubricant should be as recommended by the manufacturer.

7.2 Timing Gears. Timing gears maintain the compressor impellers in proper rotative position and hold impeller clearances. They must be securely locked to their shafts in proper position. Gears or impellers that have been removed for repair must be returned to their original positions. When installing new or repaired parts, carefully follow the manufacturers' instructions for setting clearances. Clearances must be set accurately or damage to the machine may result from impeller rubbing.

7.3 Seals. Rotary twin-lobe compressors are normally fitted with mechanical seals. Seals should be kept free of dirt, dust, and foreign matter to ensure long life. Sealing faces are lapped together during manufacture and the entire assembly must be replaced when defective seals are found. Use extreme care when installing seals to prevent marring of the sealing faces. Be sure that the lapped sealing faces are free of scratches, dust, or finger marks before installation. Carefully follow the manufacturers' instructions when replacing mechanical seals.

7.4 Bearings. Rotary twin-lobe compressors are normally fitted with antifriction ball or roller bearings. Worn or defective bearings should be replaced. Wear to bearings may allow the impeller shaft to shift position until a cylinder rub develops or the impellers begin rubbing. Carefully follow the manufacturers' instructions when replacing bearings.

Section 4. ROTARY LIQUID PISTON COMPRESSORS

1 DESCRIPTION. Rotary liquid piston compressors (figures 2-10 and 2-11) utilize a liquid (water or other low viscosity liquid) as the compressant. The unit consists of a round multiblade rotor that rotates in an elliptical casing partially filled with liquid. The liquid is carried around by the rotor and follows the contour of the casing. The rotor buckets are filled with air, through the intake port, by the suction created when the liquid is forced to recede from the rotor buckets at the wide point of the elliptical casing. As the liquid reaches the narrow point of the ellipse, it reenters the buckets, compresses the air, and passes it out through the discharge ports. The cycle is repeated twice for each revolution of the rotor. Liquid is supplied continuously to the compressor to take up the heat of compression. Excess water is discharged from the compressor with the air and is removed by a separator connected to the compressor discharge. Operating and maintenance instructions for electric motor drives are contained in NAVFAC MO-205, Central Heating and Steam Electric Generating Plants.

2 STARTUP.

2.1 Prestart Inspection. Carefully inspect the installation to ensure the following prestart requirements are fulfilled.

(a) All installation and repair work has been completed.

(b) Installation has been cleaned and tested for leaks.

(c) Alignment has been checked.

(d) Safety valve has been tested for proper operation.

(e) Compressor is properly lubricated.

2.2 Startup. Proceed as follows:

(a) Open compressor discharge valves.

(b) Turn on compressor sealing-water.

(c) Start the compressor.

3 NORMAL OPERATION. While the system is operating, perform the following tasks.

(a) Maintain correct sealing-water flow rate.

(b) Check air discharge pressures.

(c) Watch for irregular performance of the compressor.

4 SHUTDOWN. When removing the compressor from service for an extended period, thoroughly drain the casing of all sealing-water. Run a flushing oil through the compressor to prevent rusting and corrosion. Repack grease lubricated bearings with new grease and fill oil lubricated bearings with

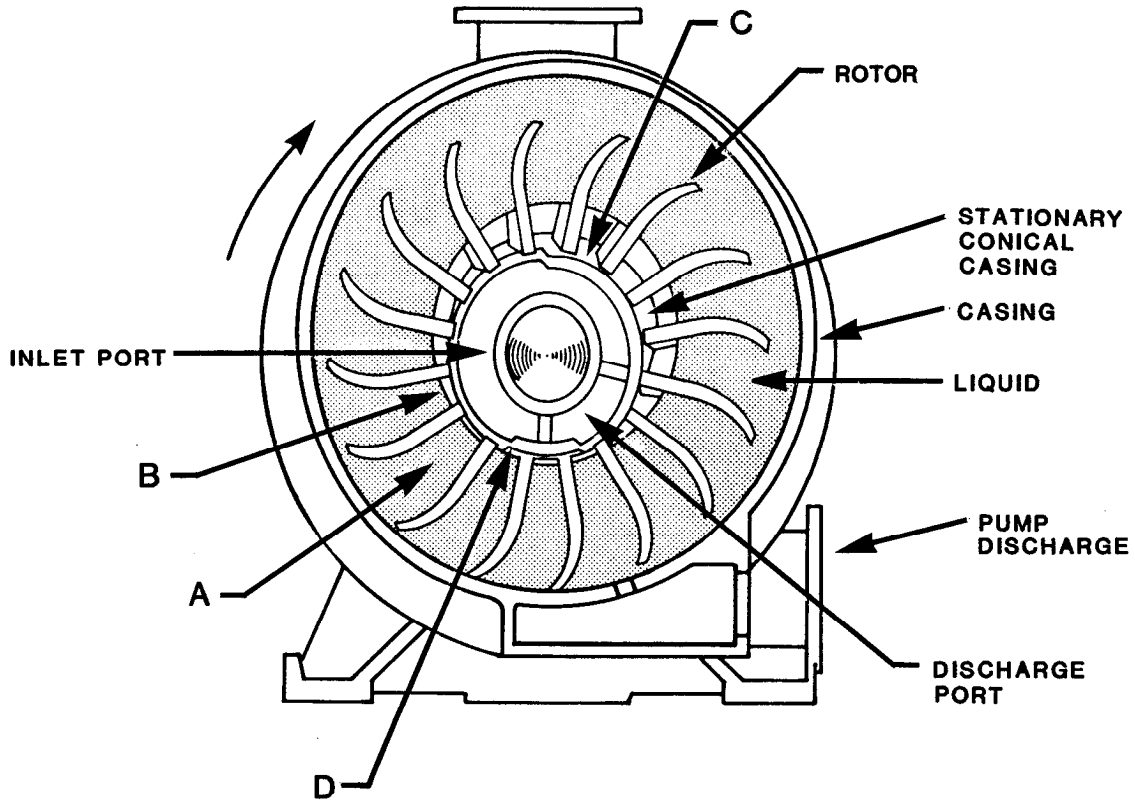

Starting at point A, the chambers of the rotor are filled with water. This water rotates with the rotor, but follows the contour of the casing. The water, which entirely fills the rotor chamber at point A, recedes into the casing as the rotor advances, until at point C, the rotor chamber is empty. The converging casing forces the water back into the rotor chamber, until at point D, the chamber is again full. This cycle occurs once during each revolution of the rotor. As water recedes from the rotor chamber at point B, the water is replaced by air drawn through an inlet port in the stationary conical casing that connects to the compressor inlet. As the rotor turns through 360° and water is forced by the casing back into the rotor chamber, the air that has filled the chamber is forced through discharge ports in the conical casing to the compressor discharge. The water used as the liquid compressant also serves to seal clearances between the rotor and the cone and is referred to as seal water.

FIGURE 2-10. Compression Cycle, Rotary Liquid Piston Compressor

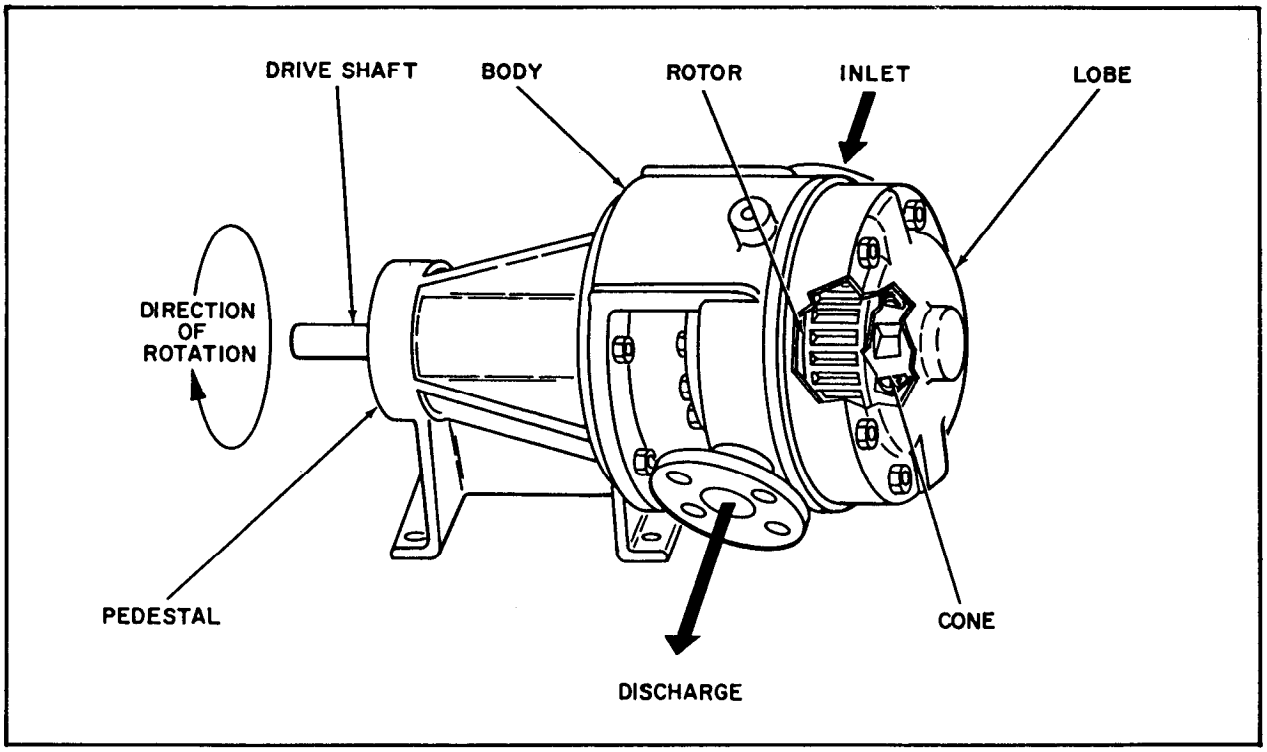

FIGURE 2-11. Functional Elements, Rotary Liquid Piston Compressor

fresh oil. Remove shaft packing. Turn the compressor over by hand once a week to keep a coating of oil on the bearings.

5 OPERATIONAL PREVENTIVE MAINTENANCE. Operational preventive maintenance shall include the following tasks.

(a) Never run a liquid piston compressor dry. Operation without sealing-water results in serious damage to the compressor.

(b) Maintain correct sealing-water flow rate. Insufficient sealing-water will result in a loss of capacity. Excess sealing-water overloads the compressor drive. Consult the manufacturer's instructions for correct sealing-water quantities.

(c) Do not overtighten the packing on units with stuffing boxes. This results in rapid packing wear and scoring of the shaft.

6 PREVENTIVE MAINTENANCE INSPECTION. The following inspection schedules are adequate for average installations.

6.1 Daily Inspection. The operator shall inspect the compressor installation daily for the following conditions:

(a) Unusual noise or vibration

(b) Abnormal discharge pressures

(c) Overheating of motor

(d) Abnormal bearing temperatures

(e) Correct sealing-water flow and pressure

6.2 Semiannual Inspection. Inspect the following items:

(a) Alignments

(b) Wear of packing and scoring of shaft at packing or seals

(c) Setting and operation of safety valves

6.3 Annual Inspection. Once a year or as required, depending upon the severity of service, inspect for the following conditions:

(a) Bearings for wear and dirt

(b) Corrosion or erosion of parts

(c) Correct clearances

(d) Compressor internals for scale deposits

(e) Gaskets for damage

(f) Mechanical seals, if provided, for damage

7 MAINTENANCE.

7.1 Lubrication. Establish a definite lubrication schedule, in accordance with the manufacturer's recommendations, for all liquid piston compressors. Assign responsibilities for carrying out the lubrication schedule. Follow the manufacturer's recommendations for the types of lubricants to be used.

7.2 Packing. When replacing fibrous packing, thoroughly clean the stuffing box of old packing and grease. Cover each piece of new packing with the recommended lubricant. Separate the new rings at the split joint to place them over the shaft. Place one ring of packing at a time in the stuffing box and tamp firmly in place. Stagger the joints of each ring so they are not in line. After the last ring is in place, assemble the gland and tighten the nuts evenly until snug. After a few minutes, loosen the nuts and retighten them finger-tight.

7.3 Bearings. Worn or defective bearings should be replaced. Bearings are mounted in brackets on each end of the housing and are attached to the rotor shaft by locknuts. When bearings are replaced on belt-driven units, carefully check and set the belt tension. Keep the belt as loose as possible without slippage. Excessive belt tightening will put an unnecessary strain on the compressor bearings. When mounting pulleys or couplings that require a drive fit on the compressor shaft, back up the opposite end of the shaft to absorb the driving force. Unless this is done, there is danger of damaging the bearings. Maintenance instructions for antifriction ball and roller bearings are contained in NAVFAC MO-205, Central Heating and Steam Electric Generating Plants.

CHAPTER 3. DYNAMIC COMPRESSORS

1 DESCRIPTION. Centrifugal and axial flow compressors are both categorized as dynamic compressors. Dynamic compressors move gases by a process of acceleration. The direction of airflow in the centrifugal compressor is radial with respect to the axis of rotation. In the axial flow compressor airflow is parallel to the axis of rotation. Centrifugal and axial flow compressors are driven by electric motors or steam turbines. Operating and maintenance instructions for electric motor and steam turbine drives are contained in NAVFAC MO-205, Central Heating and Steam Electric Generating Plants.

1.1 Centrifugal Compressor. The major components of a centrifugal compressor are: impeller, shaft, casing, and diffuser/volute (figures 3-l and 3-2). In the center of the impeller is the suction eye area, the center of low pressure when the impeller is rotating. Figure 3-3 illustrates three basic impeller designs. Air entering the suction eye is moved outward along the impeller blades by centrifugal force with increasing velocity. The air leaves the impeller through the diffuser to the volute where the air is slowed and the velocity component of the air mass is partially converted into pressure. In a multistage compressor the air exiting the volute is fed to another impeller-diffuser-volute series to further increase the air pressure.

1.2 Axial Flow Compressor. The major components of an axial flow compressor are: rotor with rows of blades, and a stator with rows of stationary blades (figures 3-4 and 3-5). The moving blades accelerate the air, and the stationary blades direct the flow of air into the next row of moving blades.

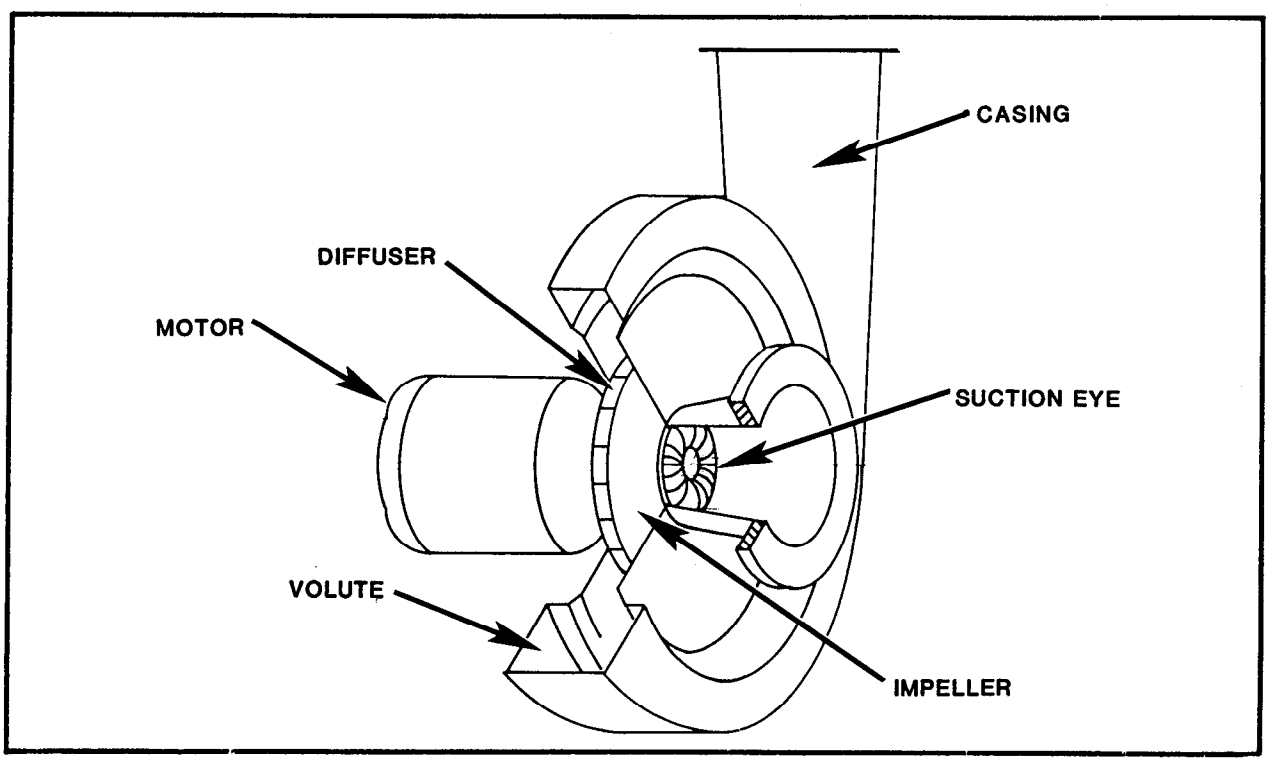

FIGURE 3-l. Simple Volute Pump

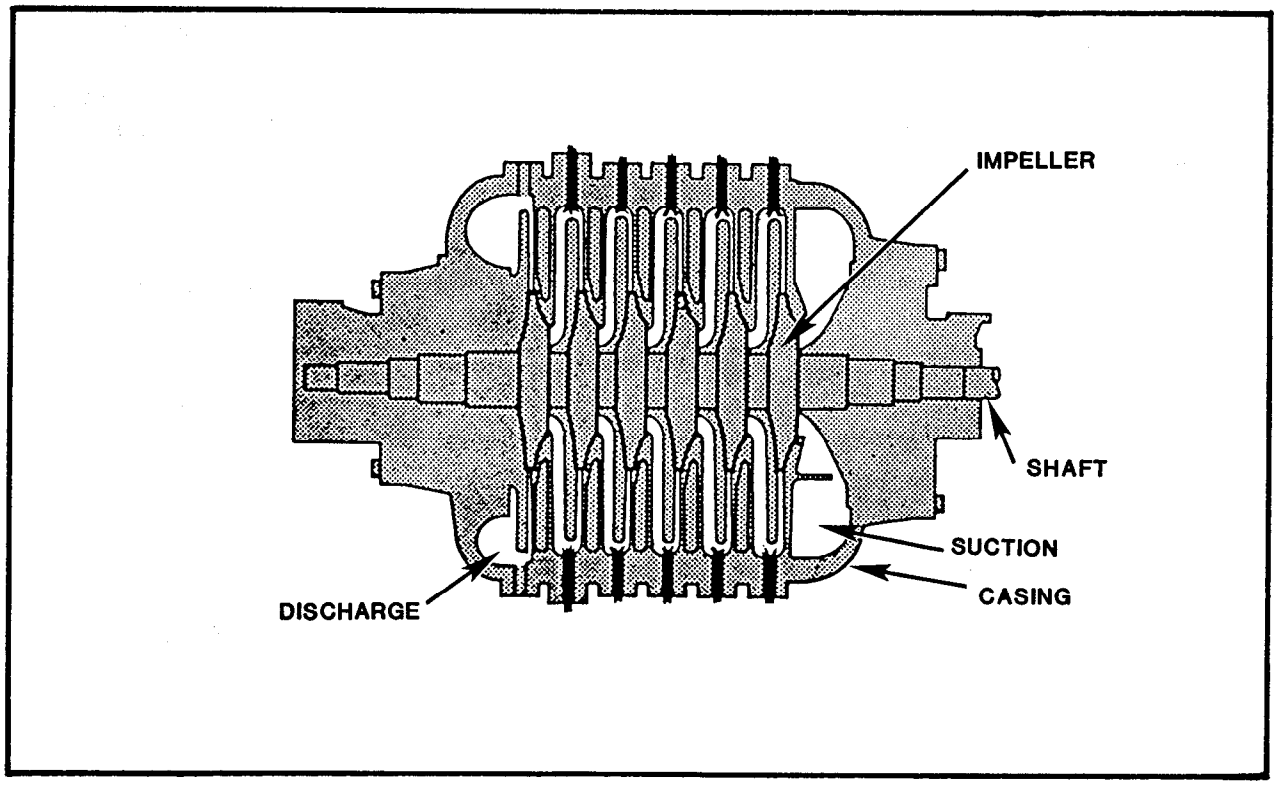

FIGURE 3-2. Six-Stage Compressor

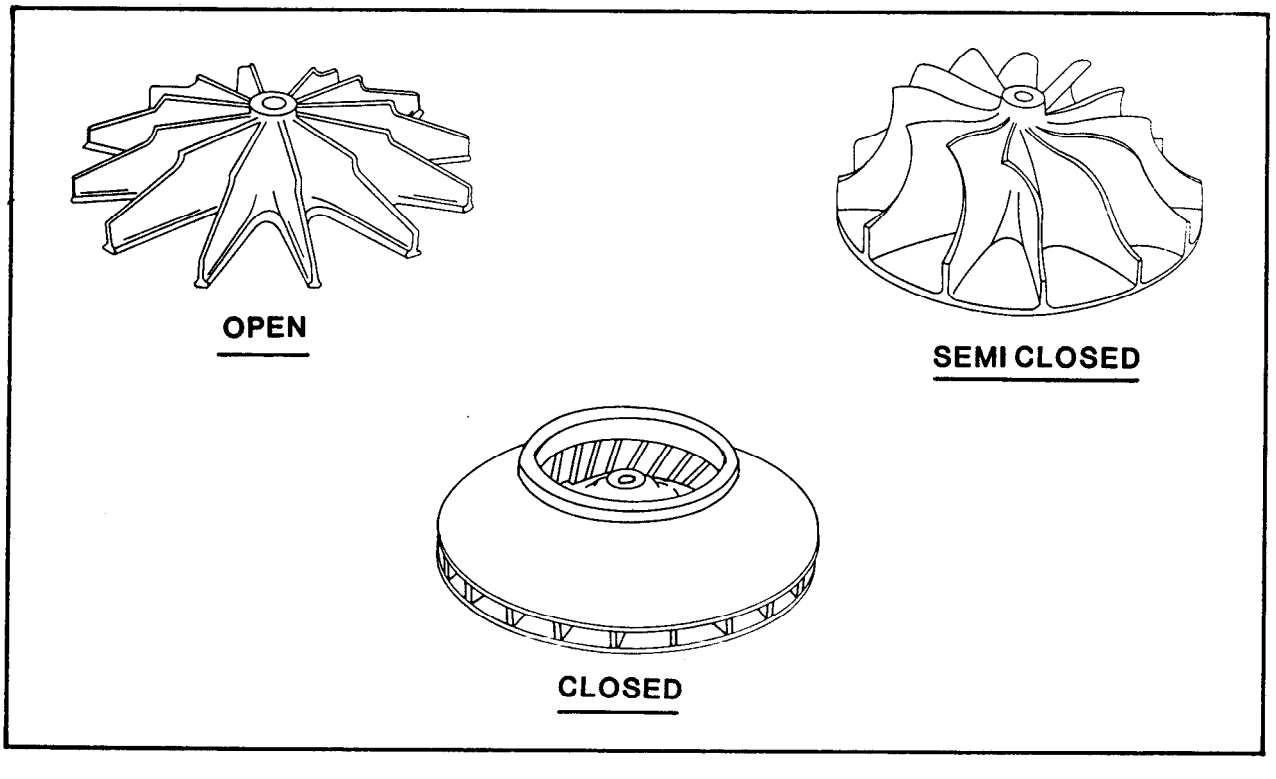

FIGURE 3-3. Impeller Design

This sequence continues until the air has passed through all the rows of moving blades. The stationary blades also offer a small amount of flow resistance, which slows down the air and increases its pressure. In an axial flow compressor, it is the continual process of accelerating the air and then slowing it down that builds up the air pressure.

2 STARTUP.

2.1 Prestart Inspection. Carefully inspect the compressor installation, performing the following prestart tasks.

WARNING

Compressor equipment, compressed air, and electricity can be dangerous. To prevent injury, before attempting any maintenance be certain the compressor cannot be started accidentally.

(a) Ensure power switch is in OFF position and tag, or verify that power shutoff valve is in OFF position and tag.

(b) Verify completion of all installation or repair work.

(c) Ensure installation has been cleaned.

(d) Verify that system has been tested for leaks.

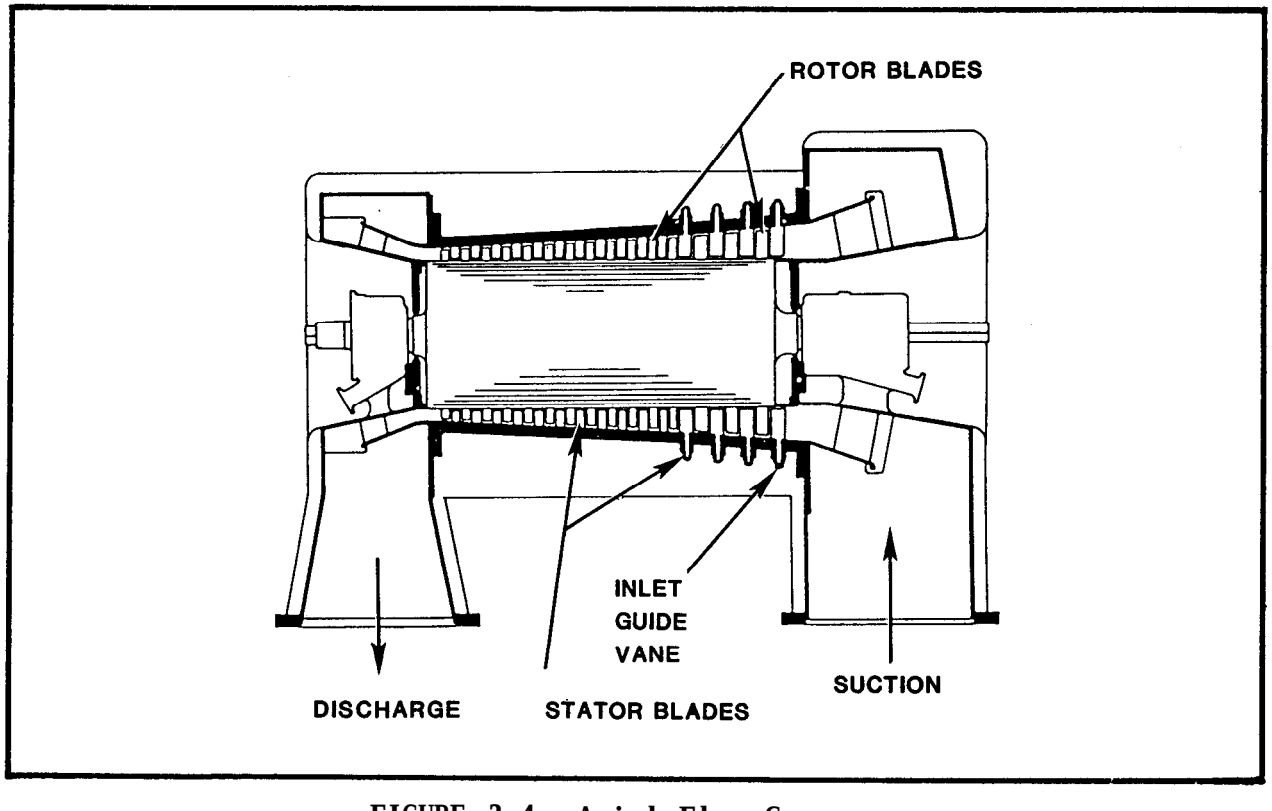

FIGURE 3-4. Axial Flow Compressor

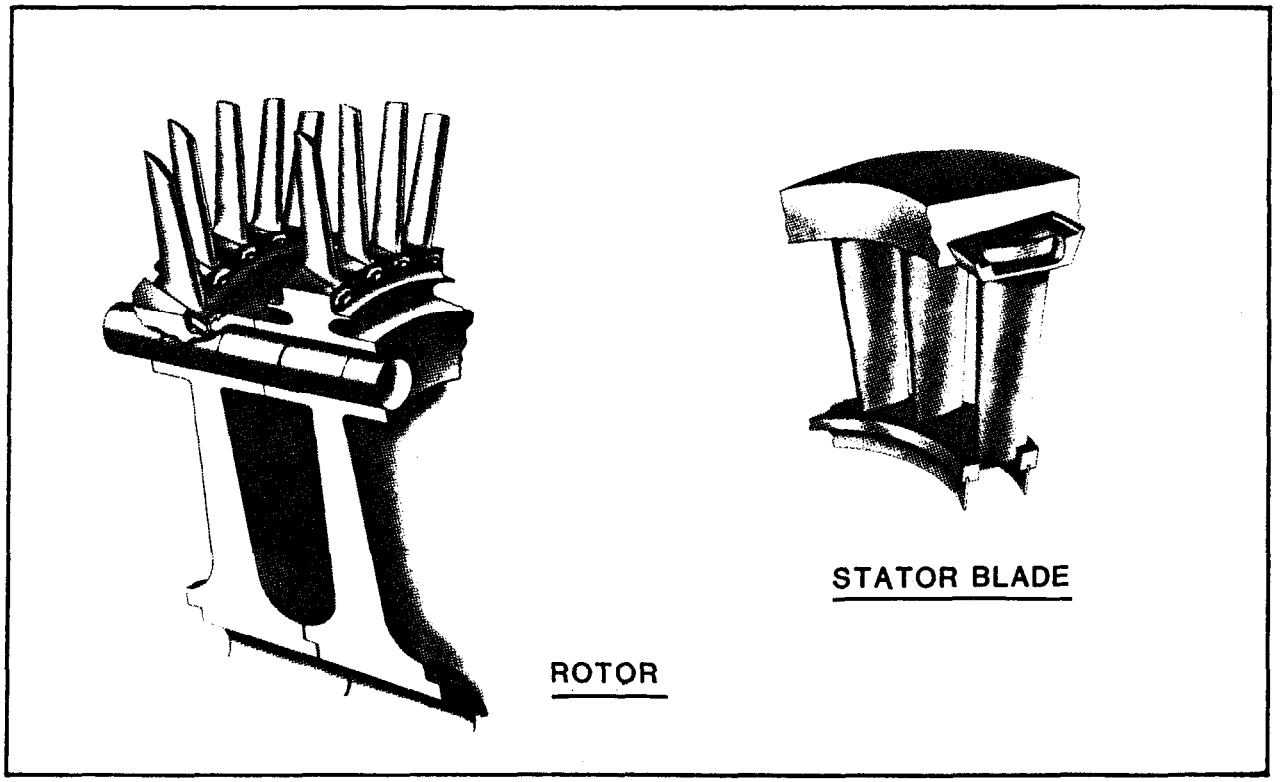

FIGURE 3-5. Rotor and Stator Blades, Axial Compressor

(e) Check coupling alignment (refer to paragraph 7.2).

(f) Check lubricating oil levels and top off, if required.

(g) Check all safety devices and controls for proper operation.

(h) Turn compressor over by hand to see that it rotates freely.

(i) Open all compressor, drain valves, drain off all liquid, and close drain valves.

2.2 Startup Procedure. Proceed as follows:

WARNING

Protective devices must be worn to avoid damage to hearing.

(a) Remove tag from electric power switch and switch to ON position, or remove tag from power shutoff valve and turn to ON position.

(b) Turn on cooling water.

(c) Start oil pump and check oil pressure.

(d) Turn on sealing air to seals, if provided.

(e) Open suction and discharge valves.

CAUTION

Never operate compressor in the critical speed range (insufficient volume at the compressor inlet to permit stable operation); surging or pumping will occur. Operation under these conditions may result in equipment damage.

(f) Start compressor drive motor as follows, depending on type:

(1) Single Speed Motor. Start and stop the motor quickly and allow the compressor to coast to a stop. Check for freedom of rotation and any unusual noise or vibration. If unit runs smoothly, start the motor and bring up to speed.

(2) Variable Speed Motor. Start the motor and bring it slowly up to speed, observing the operation carefully for unusual noise or vibration.

3 NORMAL OPERATION. While the system is operating, perform the following tasks.

(a) Check and record operational data at prescribed intervals (paragraph 5).

(b) Watch for irregular performance of the compressor and drive.

(c) Maintain proper lubricating oil levels.

4 SHUTDOWN.

4.1 Short-Term Shutdown. Proceed as follows:

CAUTION

To avoid damage to equipment, after shutting down the drive, keep auxiliary lubricating oil pump operating until bearings have cooled to ambient temperatures.

(a) Shut down compressor drive.

(b) Close suction and discharge valves.

(c) Shut off cooling water supply.

(d) Shut off seal air, if provided.

(e) Open compressor drain valves and drain off any liquid present.

(f) Shut off lube oil pump after bearings have cooled to ambient temperature.

4.2 Long-Term Shutdown. Long-term shutdown procedures require extensive disassembly. Consult the manufacturer for complete details for specific compressors. In the absence of specific procedures, use the following procedures where applicable.

(a) Centrifugal Compressors. Proceed as follows:

(1) Shutdown system as described in paragraph 4.1.

(2) Open the compressor case, remove intercoolers, diffusers, diffuser covers, rotors, bearings, and drain traps.

(3) Remove the plain and thrust bearings.

(4) Blow dry air through the water manifolds, including the oil coolers. Spread vapor phase inhibitor (VPI) crystals in the cooling water manifolds.

(5) Identify each rotor and impeller if applicable. Coat each rotor component with a rust inhibitor and pack securely in a carton.

(6) Wipe and dry all unprotected internal machined surfaces. Coat all surfaces with a rust inhibitor, including diffuser and intercooler bores.

(7) Thoroughly dry the intercoolers and reinstall them.

(8) Reinstall diffuser covers, diffusers, and intercoolers. Distribute VPI crystals throughout and close the machine.

(9) All openings must be adequately sealed with gasketed flanges, plugs, or poly wraps to prevent loss of VPI vapors, including the seal air casing vents and drains.

(10) Remove the reservoir breather and seal the opening. Coat the exposed portion of the shaft and coupling hub with preservative.

(11) Remove inlet and bypass control valves and the check valve. Clean, dry, and box.

(12) Remove all probes and cables and box adequately.

(13) Replace thrust bearing and covers and close up ALL openings using pipe plugs or blank flanges with gasket.

(14) Seal the bottom of the control cabinet if it is of the open design.

(15) Coat main drive coupling spacer with preservative and pack in separate box.

(16) Coat all external machined unpainted surfaces with preservative.

(b) Axial Flow Compressors. It is important to implement proper long-term storage (LTS) procedures according to the specific model of compressor. In situations where LTS is planned, the manufacturer must be contacted to provide LTS procedures. In most instances, LTS will include specific variations of the following:

(1) Partial disassembly

(2) Periodic rotation of main shaft

(3) Use of desiccants

(4) Specialized bearing maintenance according to bearing types

(5) Proper tagging

4.3 Cold Climate Shutdown. If the compressor might be subjected to freezing temperatures while shut down, perform the following steps as applicable.

(a) Perform steps 4.1(a) through 4.1(f).

(b) Drain water from oil cooler.

(c) Drain all steam lines.

(d) Drain all cooling lines.

(e) Drain water-cooled diaphragms.

(f) Tag equipment controls.

5 OPERATIONAL PREVENTIVE MAINTENANCE. Operational preventive maintenance includes the following tasks.

(a) Keep a daily operating log to aid in detecting equipment malfunctions. The following list may be helpful in designing a site specific operations log for collecting and developing a useful data base:

(1) Log-in time

(2) Vibration monitor reading at each compressor stage

(3) Warning lights

(4) Inlet temperature

(5) Inlet filter pressure

(6) Pressure and temperature of each compressor stage

(7) Condition of condensate trap at each compressor stage

(8) Air coolers temperature in and out

(9) Oil pressure

(10) Oil cooler temperature in and out

(11) Oil level at motor

(12) Oil level at oil reservoir

(13) Drain drip legs

(14) Hours on unit

(15) Bearing temperatures

(16) Compressor speed

(b) Wipe down machine daily with clean, lint-free rag.

6 PREVENTIVE MAINTENANCE INSPECTION. An inspection and maintenance program is important to ensure satisfactory performance. One of the most important aspects of any maintenance program is prudent use of the operational data base compiled from a daily operating log [paragraph 5(a)]. An operational log provides an indication of performance, need **for revising the maintenance** schedule, and, indirectly, spare parts requirements. Generalized procedures are presented herein, but frequency of inspections will vary and must reflect each installation's operating conditions and environment.

6.1 Daily Inspection. Preventive maintenance inspections shall include the following tasks.

(a) Review the current operating log for significant deviations in the data such as:

(1) Abnormal pressures or temperatures of lubricating oil

(2) Abnormal appearance or presence of water in lubricating oil

(3) Lubricating oil levels

(4) Abnormal bearing temperatures

(5) Increased inlet filter pressure

(b) Listen for unusual noises.

(c) Listen and feel for unusual vibrations.

(d) Visually inspect the complete compressor plant for leaking fittings or loose fasteners.

6.2 Semiannual Inspection. In addition to performing inspections specified in paragraph 6.1, perform the following tasks.

(a) Check lubricating oil for deterioration and/or presence of water.

(b) Test safety controls to ensure proper functioning.

6.3 Annual Inspection. In addition to performing inspections specified in paragraphs 6.1 and 6.2, perform the following procedures where applicable.

(a) Check journal and thrust bearings for wear. Adjust or replace as required.

(b) Check alignment and coupling condition. Visually inspect coupling condition and use dial indicator to realign coupling within specified tolerances (paragraph 7.2).

(c) Clean and repaint all areas of corrosion or peeling paint on compressor case.

(d) Check compressor bolts for tightness. Retighten loose bolts to specified torque values.

6.4 Internal Inspection. If compressor performance has fallen off, or noise or driver overload indicate internal trouble, dismantle the compressor and make the following inspection.

(a) Examine casing or stator for corrosion or erosion damage and dirt.

(b) Check case for water leaks if diaphragm cooling is provided.

(c) Inspect rotor for corrosion or erosion damage to impellers or blades.

(d) Check rotor for balance.

(e) Check clearances and condition of rotor, bearings, and seals. Record all measurements. If the need for bearing replacement is indicated, refer to paragraph 7.3.

(f) Perform lubrication system maintenance (paragraph 7.1).

7 MAINTENANCE.

7.1 Lubrication System. Lubrication system maintenance must be performed at intervals prescribed for each specific installation. In addition, lubrication system maintenance shall be performed at times of internal inspection and repair. Lubrication system maintenance includes the following tasks.

(a) Clean oil filters and strainers or replace cartridges.

(b) Change oil if it is warranted by a chemical analysis or periodic schedule. To change oil perform the following tasks.

(1) Tag equipment controls.

(2) Drain oil from all systems.

CAUTION

To avoid internal damage to equipment, use only synthetic sponges when cleaning internal surfaces and components. Do not use cloth rags or cotton waste.

(3) Thoroughly clean bearing chambers and oil reservoirs.

WARNING

Do not use gasoline, kerosene, or other low flashpoint solvents. A serious explosion may result.

(4) Flush out complete lubricating system with flushing oil.

(5) Inspect oil pumps for corrosion, erosion, and wear.

(6) Remove tube bundles from oil coolers, if applicable, and thoroughly clean tubes.

(7) Ensure closure of all drain valves, reinstallation of plugs, and reinstallation of sump covers.

(8) Refill lubricating oil reservoirs to proper level.

(9) Remove tag from controls.

(10) Follow procedures for startup provided in paragraph 2.2.

7.2 Alignment. Alignment of the unit may be checked with a dial indicator. Refer to specific installation manual for applicable tolerances. To align the coupling, perform the following procedure.

CAUTION

To ensure proper alignment, check alignment in both the hot and cold condition. After checking the alignment in the cold condition, operate the compressor under full load for 1 hour. Shut down the unit and recheck the alignment immediately.

NOTE

When using the dial indicator, make sure the compressor shaft end play is held constant in one direction.

(a) Attach indicator bracket to compressor hub of coupling. Figure 3-6 illustrates two methods of attaching the indicator mounting bracket to the coupling.

(b) Attach dial indicator to mounting bracket with the pointer contacting the shoulder on the coupling hub.

(c) Rotate compressor shaft and take readings 90° apart.

(d) Correct axial misalignment by adding or removing shims under the driver to bring compressor and drive centerlines into alignment.

(e) To check angular alignment, follow the above procedure, but take indicator readings on the coupling hub face (figures 3-6 and 3-7).

(f) To correct angular misalignment, parallel the coupling faces by shifting the drive on its base and adding or removing shims under the driver base.

7.3 Bearings. Centrifugal and axial flow compressors utilize many bearing types such as: split sleeve, steel backed babbit inserts, tilting pad, and antifriction roller and ball bearings. Use specific manufacturer's information for bearing wear, adjustment, and replacement considerations.

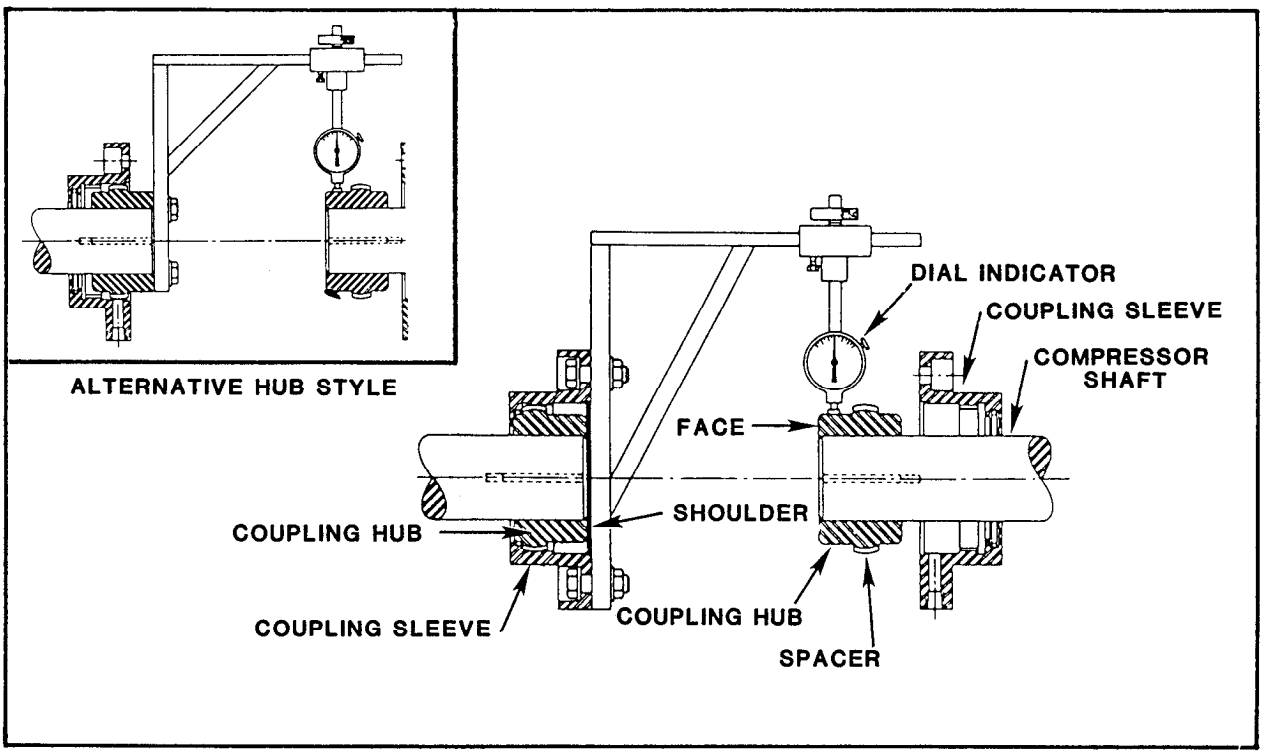

FIGURE 3-6. Alignment Setup

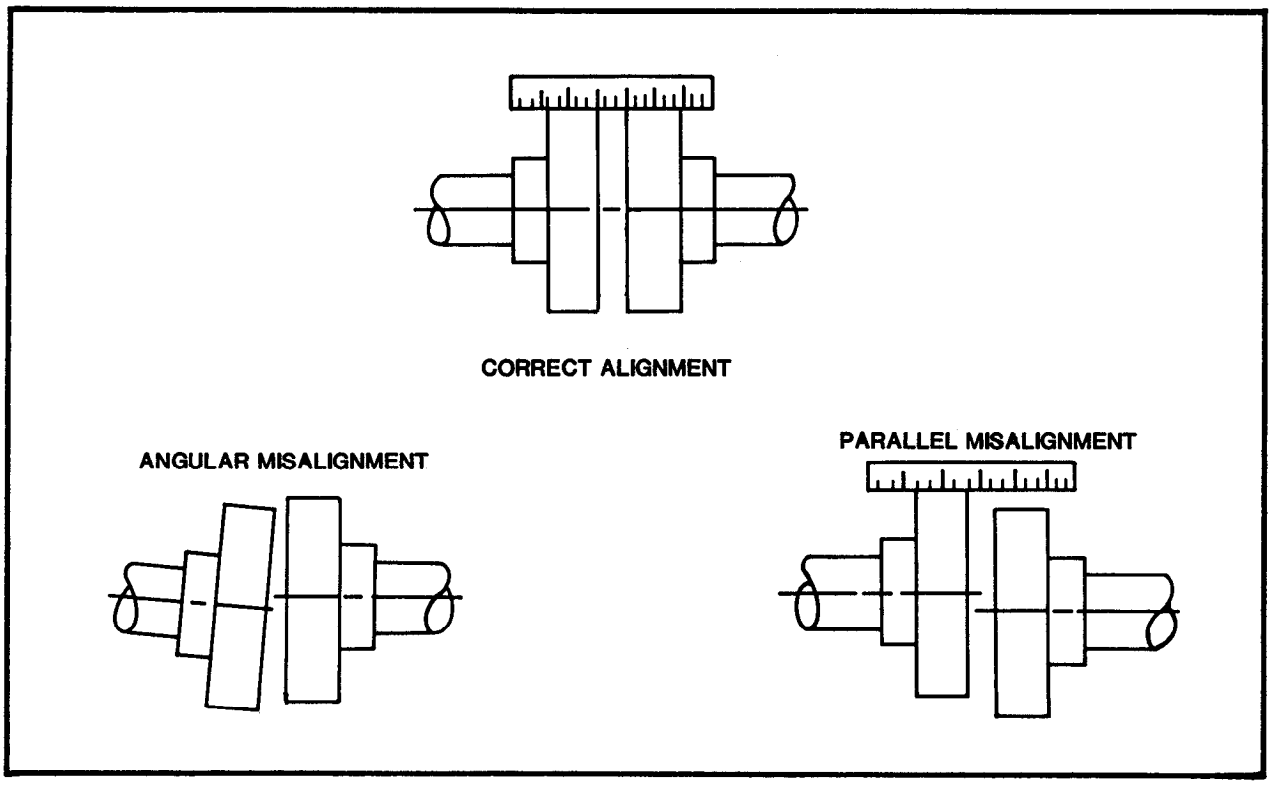

FIGURE 3-7. Coupling Alignment and Misalignment

CHAPTER 4. AUXILIARY EQUIPMENT

Section 1. INTAKE FILTERS

1 DESCRIPTION. Air filters are provided on air compressor intakes to prevent atmospheric dust from entering the compressor and causing scoring and excessive wear. There are two types of air filters, the dry type and the oil-wetted type. Generally, dry type filters are more efficient than oil-wetted types in trapping and removing very fine, solid particles from the incoming air. However, dry type filters must be cleaned and replaced more often than oil-wetted types. Oil-wetted types are often used where there are heavy dust concentrations present in the atmosphere.

1.1 Dry Type Filter. Dry filters employ many different materials for the filter media. Paper, polyester felt, and fine wire mesh are a few examples. The filter media can be folded, wrapped, and layered in many configurations to achieve the desired efficiency. Although the dry filter is more efficient than the wetted type filter, the pores in the dry filter media become clogged and result in a pressure drop across the filter. Dry type filters cannot be used successfully where intake air contains moisture or vapors in amounts that would cause disintegration of the filtering media. The main advantages of the dry type filter, when used in an approved application, is its high efficiency and ease of maintenance.

1.2 Oil-Wetted Type Filter. Wet filters have filter elements that are coated with a film of oil. The oil film catches airborne particulates before they reach the actual filter element media. Wetted type filters are of two designs, oil-wetted and oil-bath filters. In an oil-wetted filter, a coating of oil is deposited on the filter element, which is usually made of layers of wire mesh. The oil coating is intended to adhere to the element for a fairly long service period. The airborne particulates are impinged or trapped on the filter element which has been covered with a film of oil. In an oil-bath filter (figure 4-l), the same viscous impingement principle is employed. However, the airflow is directed through the oil sump, carrying oil with it to the filter element where the oil collects and washes the impinged particles down to the oil sump, forming sludge. The self-washing aspect of the oil-bath filter extends the time between maintenance routines.

2 INSPECTION. Air filter inspections are to be performed when any of the following conditions exist.

(a) Prescribed time interval on the maintenance schedule has elapsed.

(b) Pressure drop across the filter element indicates a maintenance requirement.

(c) One-fourth inch of sludge has built up in the oil sump of the oil-bath type filter.

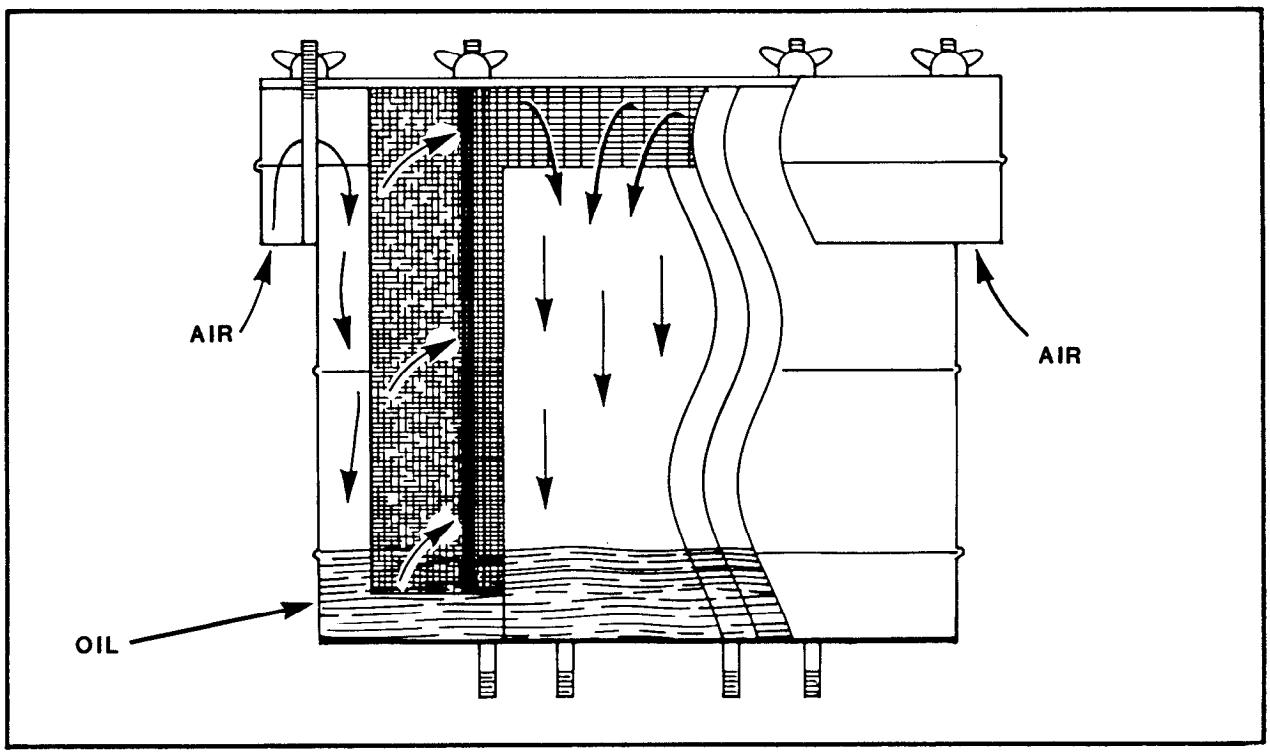

FIGURE 4-1. Oil-Bath Intake Filter

3 MAINTENANCE. Maintenance methods differ for each type of air filter. Use the appropriate method for the filter undergoing maintenance per the following paragraphs.

CAUTION

Dry type filter elements can easily be damaged allowing harmful particulates to pass. If in doubt about correct cleaning procedures, replace the filter element.

3.1 Dry Type Filter. Service the filter assembly as follows:

(a) Shut down compressor and tag controls.

(b) Remove top of filter assembly.

(c) Remove filter element and clean as prescribed by manufacturer or replace.

(d) Reassemble filter element and top to filter assembly.

(e) Remove tag from controls.

3.2 Oil-Wetted Type Filter. Clean the filter assembly as follows:

(a) Shut down compressor and tag controls.

(b) Remove the top and filter element from filter assembly.

WARNING

Do not use gasoline, kerosene, or other low flashpoint solvents. A serious explosion may result.

(c) Wash filter element with approved solvent or detergent and water solution.

(d) Dry filter element thoroughly.

(e) Apply fresh oil by spray or dip and let excess oil drain. Use oil type suggested by manufacturer.

(f) Clean filter body.

(g) Reinstall filter element and top to filter assembly.

(h) Remove tag from controls.

3.3 Oil-Bath Filter. Clean the filter assembly as follows:

(a) Shut down compressor and tag controls.

(b) Remove filter assembly from compressor.

WARNING

Do not use gasoline, kerosene, or other low flashpoint solvents. A serious explosion may result.

(c) Wash filter element with approved solvent or detergent and water solution.

(d) Dry filter element thoroughly.

(e) Clean and dry filter oil sump.

(f) Add oil to oil sump to indicated level.

(g) Reinstall filter element and top on filter assembly.

(h) Reinstall filter assembly on compressor.

(i) Remove tag from controls.

INTENTIONALLY LEFT BLANK

Section 2. SILENCERS

1 DESCRIPTION. Compressor system silencers are sound-absorbing accessories attached to the system at the intake and output of the compressor. The silencers absorb noise produced by the compressor in order to reduce the noise output to an acceptable level. **In general, air noise silencers are** cylindrical housings containing acoustically tuned baffles and sound-absorbing material (figure 4-2).

2 INSPECTION AND MAINTENANCE. At intervals prescribed by the manufacturer's maintenance schedule, inspect and perform maintenance on the silencer as follows:

(a) Shut down system and tag controls.

(b) Inspect internal parts for damage or loosening from corrosion or vibration.

(c) Inspect interior of silencer and, if dirt is present, clean as follows:

(1) Remove silencer from intake system and look for sources of dirt entry into silencer.

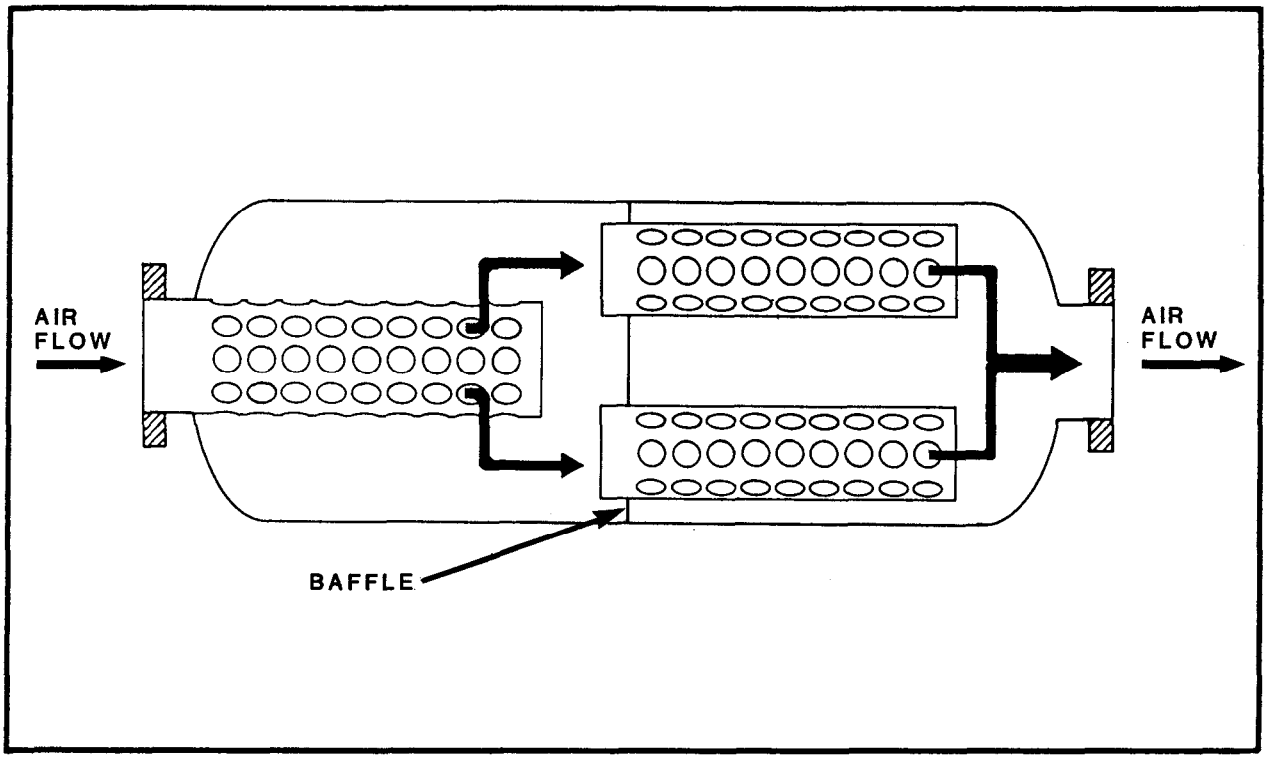

FIGURE 4-2. Compressor Intake Silencer

WARNING

Do not use gasoline, kerosene, or other low flashpoint solvents. A serious explosion may result.

(2) Clean silencer using approved solvent or detergent and water solution.

(3) Dry silencer thoroughly.

CAUTION

Ensure all joints are tight to avoid entry of unfiltered air. Dirt in the air will cause premature wear to the compressor.

(4) Reinstall silencer into compressor system using new gaskets and seals.

(d) Check all external surfaces for corrosion, peeling, or damaged paint. Repaint as necessary.

(e) Remove tag from controls.

Section 3. INTERCOOLERS AND AFTERCOOLERS

1 DESCRIPTION. Intercoolers and aftercoolers are heat exchangers employed to dissipate the heat generated in compression. There are two types of heat exchangers used on air compressors, air-cooled and water-cooled.

1.1 Air-Cooled Heat Exchanger. Air-cooled heat exchangers are most often used on small compressors. The air-cooled heat exchanger is a finned, tubular radiator (figure 4-3).

1.2 Water-Cooled Heat Exchanger. The most common design of water-cooled heat exchangers, shell and tube type, consists of a single bundle of tubes enclosed inside a cylindrical shell (figure 4-4). The air to be cooled passes through the tubes while the water passes over the tubes. Baffles are often provided in the tube bundle to direct the waterflow across the heat exchanger tubes in the most efficient manner.

(a) The intercooler is located between the discharge of one cylinder and the intake of the next cylinder of multistage compressors. The intercooler reduces the temperature and the volume of the compressed air for delivery to the next compression stage.

(b) The aftercooler is located at the discharge of the last cylinder to cool the air, reduce its volume, and to liquify any condensable vapors.

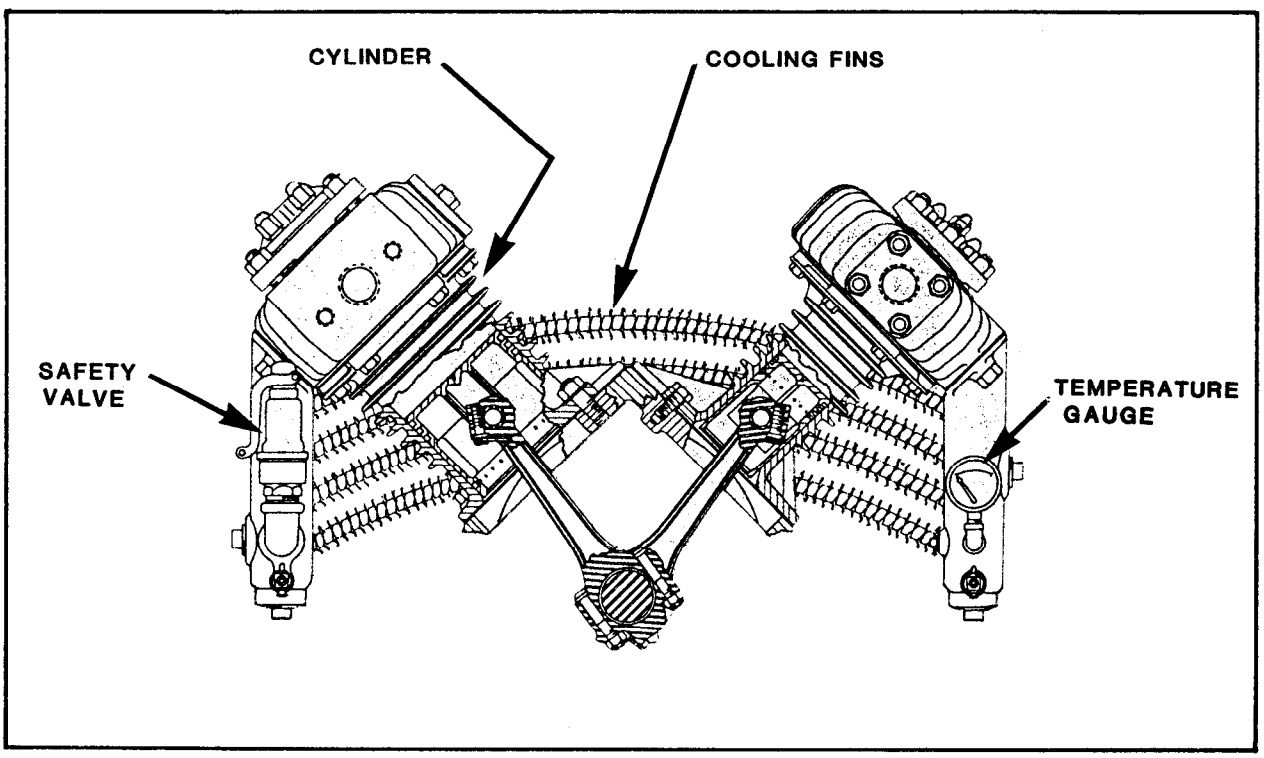

FIGURE 4-3. Air-Cooled Heat Exchanger

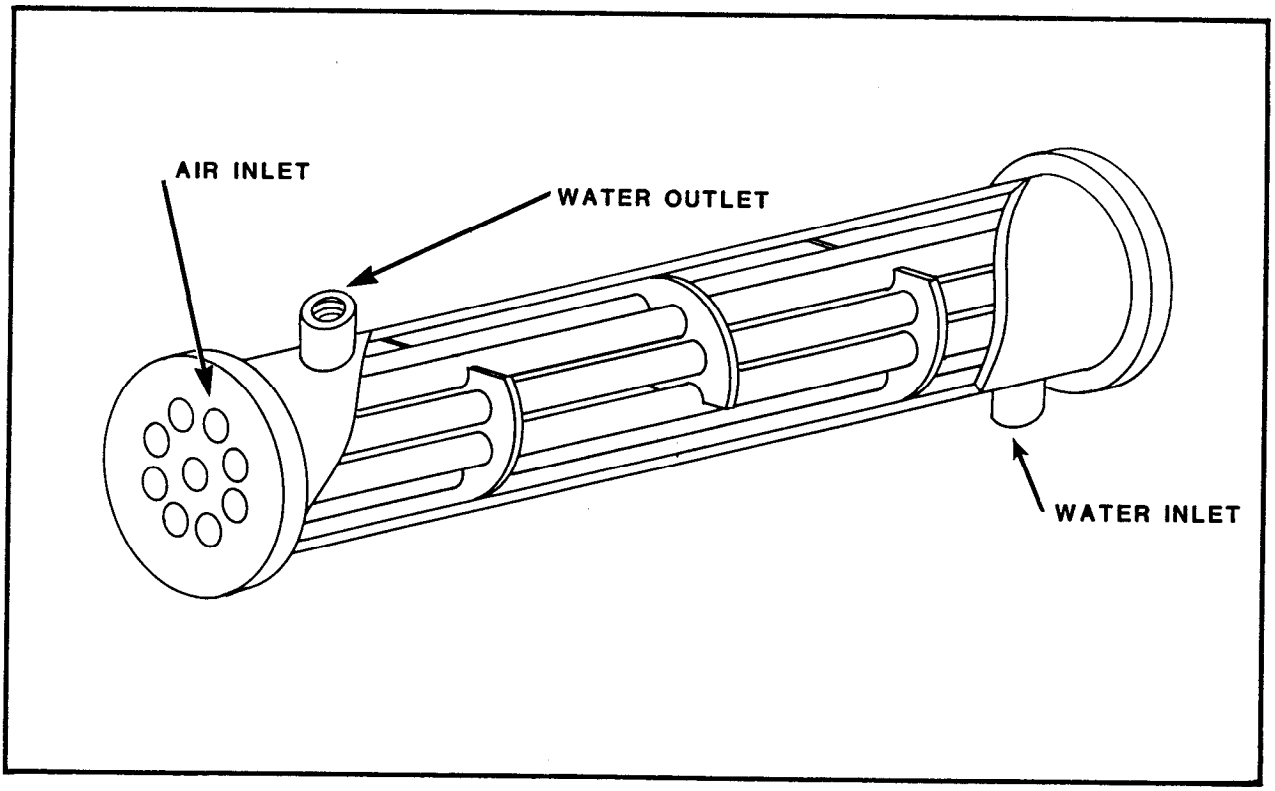

FIGURE 4-4. Water-Cooled Heat Exchanger

2 STARTUP.

2.1 Prestart Inspection. Carefully inspect the intercooler or aftercooler, ensuring the following prestart requirements have been fulfilled.

(a) Verify completion of all installation or repair work.

(b) Ensure equipment has been cleaned and tested for leaks.

(c) Ensure thermometers, pressure gauges, and controls are in good operating condition.

(d) Ensure safety valves are operating.

2.2 Startup Procedure. Always start intercooler and aftercooler cooling waterflow before starting the air compressor. Proceed as follows:

(a) Open air vent valves on waterside of cooler.

(b) Open cooling water inlet and outlet valves.

(c) Close waterside vent valves after all air has been displaced.

3 NORMAL OPERATION. Maintain rated cooling waterflow. Check airside drain periodically to see that it is operating properly and unit is free of condensate.

4 SHUTDOWN. If the compressor is going to be shut down, perform the following procedures.

(a) Maintain cooling waterflow until coolers have reached ambient temperature.

(b) Drain all water from cooling system if the cooler will be exposed to freezing temperatures.

5 OPERATIONAL PREVENTIVE MAINTENANCE. Observe the following procedures during normal operation.

(a) Maintain rated cooling waterflow. Avoid excessive waterflow which might cause erosion.

(b) Adjust waterflow rates slowly to avoid sudden temperature changes in the cooler.

(c) Shut down compressor if condensate trap is collecting excessive amounts of water. Cooler tubes may be leaking.

(d) Shut down compressor if cooler air temperature is abnormally high. Leak in cooler tubes could be allowing air to displace cooling water in waterside of cooler.

6 PREVENTIVE MAINTENANCE INSPECTION.

6.1 Daily Inspection. Inspect the cooler daily for the following conditions:

(a) Proper operation of the automatic controls and instruments

(b) Water leaks, temperature, and flow rate

(c) Any deviations from normal temperature or pressure drops across the cooler

6.2 Periodic Inspection. Inspect the following items at intervals prescribed by the manufacturer's maintenance schedule.

(a) Check cooler for corrosion and peeling paint.

WARNING

Do not attempt to repair or remove any compressor system parts without first relieving pressure from the entire system.

(b) Check safety valves for setting and proper operation.

(c) Check manual and automatic valves for leakage and corrosion.

(d) Remove the tube bundle from the cooler and carefully inspect the internals of the unit for the following conditions.

(1) Corrosion to tubes, tube sheets, and baffles: Corrosion and electrolysis (galvanic corrosion) may appear very similar, but they are different and occur because of the presence of entirely different elements. Since carbon dioxide and oxygen are the main causes of corrosion, any operating method that reduces the content of carbon dioxide and/or oxygen will reduce corrosive effects. One method to control CO_2, and O_2 levels in the coolant is to reduce coolant losses wherever possible. This reduces the entry of additional free CO_2 and O_2 present in most makeup water. Different pretreatments of makeup water may be required such as: lime soda softening, hot lime zeolite softening, acid cycle softening, and salt splitting. All types reduce the quantity of CO_2. Internally, corrosion of piping can be controlled by the use of corrosion inhibitors. For more information, refer to NAVFAC MO-225, Industrial Water Treatment.

(2) Electrolysis of tubes, tube sheets, and baffles: Electrolysis is an electrochemical corrosion associated with the current caused by dissimilar metals in an electrolyte (coolant). It resembles erosion in appearance, but the loss of material is due to the exposure of two metals of different compositions (such as steel and bronze or steel and aluminum) to an electrolyte (coolant). Two methods used for controlling the effects of electrolysis are electronic cathodic systems and sacrificial anode placement within the system (such as zinc compound plugs).

(3) Erosion to tubes, tube sheets, and baffles: Erosion may be evident at material edges, tube ends, and baffles, due to excessive flow rates and coolant impurities. Evidence of erosion is rounded edges or depressions in material surfaces at locations where the flow changes direction or rate.

(4) Leaking tubes: Any leaks in the cooler between the tubes carrying coolant and the tubes carrying compressed air is detrimental to the system. If a leak is found during a disassembly inspection it should be repaired before reassembly. In many instances when the water pressure is greater than the air pressure, the first indication of a leak is the sudden increase of moisture at the separator or receiver. If the air pressure is higher than the water pressure, air then enters the coolant system resulting in higher temperatures.

(5) Plugged tubes: If tubes become plugged, it is an indication of an imbalance in the coolant-equipment relationship and conditioning of the coolant should be considered. Plugged tubes, depending on the number, usually result in higher system temperatures. Most plugged tubes can be cleaned without causing damage to the tube. Consult the manufacturer's instructions for details.

(6) Scale deposits: Scale deposits are an indication of an imbalance between the coolant-equipment relationship. Conditioning of the coolant should be considered. Scale results in higher system temperatures. Refer to the manufacturer's instructions for correctional procedures.

7 MAINTENANCE.

CAUTION

Never hammer on the tubes or use sharp edged scrapers which may damage the tubes.

CAUTION

Chemical solutions used for cleaning should be capable of dissolving the scale or other deposits without attacking the metal.

7.1 Cleaning. Tube interiors may be cleaned by flushing a stream of water through them. For more persistent deposits, brushes, rods, or other cleaning tools may be required. Tube exteriors can be cleaned by hosing with steam or hot water. A stiff bristle brush will aid in removing deposits from between tubes. Cooler interiors may be cleaned without dismantling the unit by circulating a chemical solution through it. All chemicals should be thoroughly washed out of the cooler before returning it to service.

7.2 Tube Replacement and Repair. Coolers with leaking tubes must be repaired in accordance with manufacturers' recommendations. **Refer to specific** manufacturer's service manual for tube repair and replacement instructions.

Section 4. SEPARATORS

1 DESCRIPTION. Separators are used on compressor installations to remove entrained water and oil from the compressed air. Figure 4-5 shows a centrifugal type moisture separator where air is directed into the unit so that it obtains a swirling motion. Centrifugal action forces the moisture particles against the wall of the separator where they drain to the bottom. In the baffle type separator (figure 4-6) the air is subjected to a series of sudden changes in direction. The heavier moisture particles strike the baffles and walls of the separator and drain to the bottom of the unit.

2 OPERATION. Drain separators regularly if automatic drainers are not provided. Frequency of draining is best determined by experience with the installation. Improperly drained separators result in moisture carryover into the air distribution system.

3 PREVENTIVE MAINTENANCE INSPECTION. Inspect the separator at periodic maintenance intervals for the following conditions:

(a) Externally for rust, corrosion and peeling paint

(b) Internally for corrosion and accumulations of dirt and oil

(c) Gaskets for damage

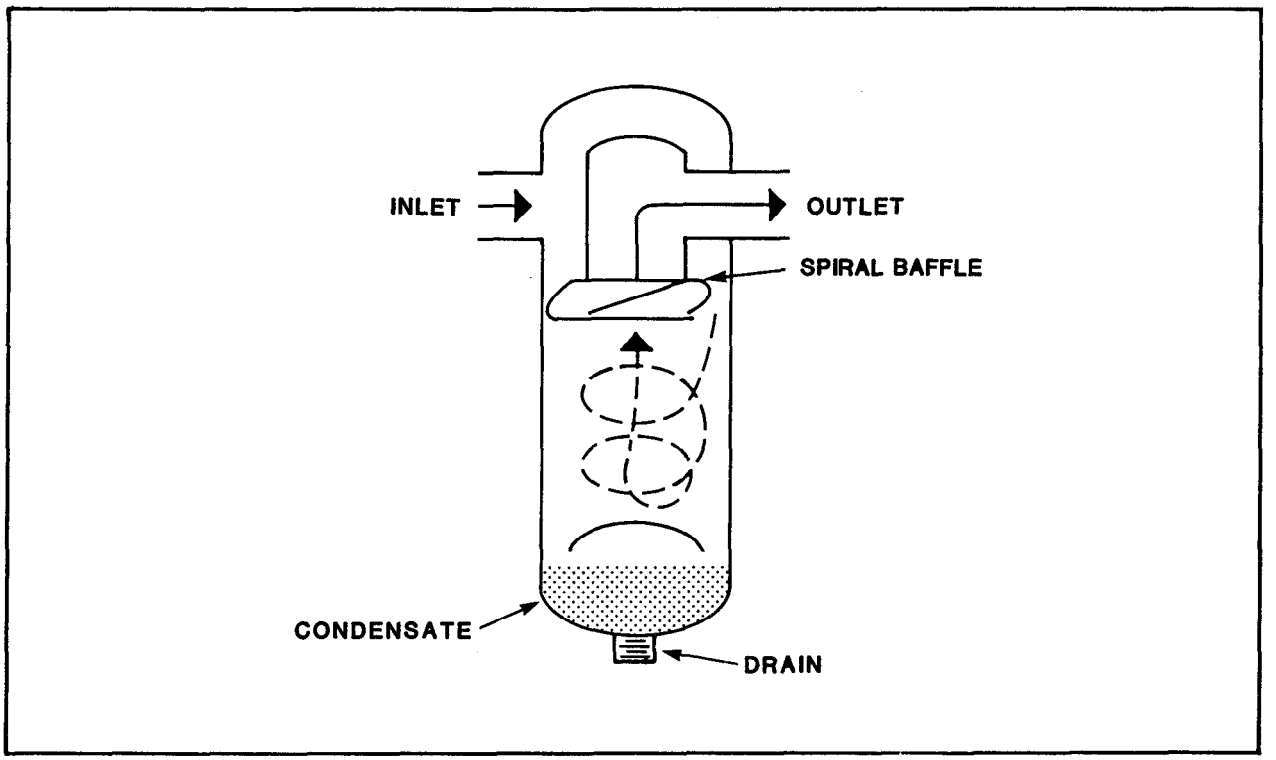

FIGURE 4-5. Centrifugal Type Separator

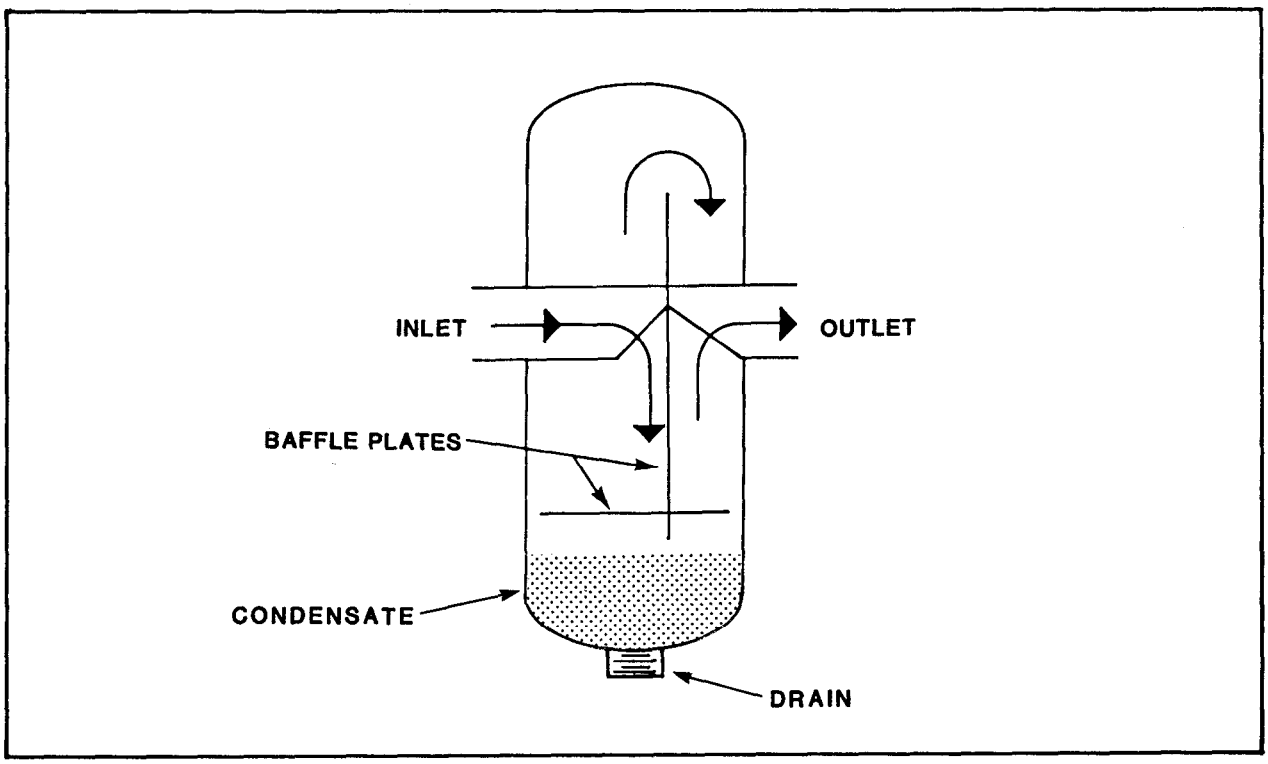

FIGURE 4-6. Baffle Type Separator

4 MAINTENANCE. Perform the following maintenance tasks.

WARNING

Do not attempt to repair or remove any compressor system parts without first relieving pressure from the entire system.

(a) Remove corrosion and peeling paint.

(b) Prime and paint prepared surfaces.

(c) Thoroughly clean separator internals.

(d) Replace defective gaskets.

Section 5. TRAPS

1 DESCRIPTION. Traps drain condensed moisture from intercoolers, aftercoolers, receivers, and distribution piping. The most common traps are the ball float trap, bucket trap, and inverted bucket trap (figure 4-7). An in depth discussion of traps is found in NAVFAC MO-209, Maintenance of Steam, Hot Water, and Compressed Air Distribution Systems.

2 STARTUP. Some compressed air drain traps must be primed before placing them in service. This is done by filling the trap half full with freshwater.

3 SHUTDOWN. If the compressed air system is not in operation and the drain traps might be subjected to freezing temperatures, thoroughly drain the traps of all condensate to prevent damage from freezing.

4 PREVENTIVE MAINTENANCE INSPECTION.

4.1 Daily Inspection. Check the operation of drain traps daily. Make sure the trap is draining properly and not blowing air.

4.2 Periodic Inspection. At intervals prescribed by the manufacturer's maintenance schedule, dismantle the trap. Parts should be cleaned and evaluated as to their ability to perform satisfactorily until the next scheduled periodic inspection. Inspect the trap for the following conditions:

(a) Corrosion and erosion

(b) Damaged or excessively worn valves and seats

(c) Defective float or bucket

(d) Loose, damaged, or excessively worn linkage and pivot points

5 MAINTENANCE.

WARNING

Do not attempt to repair or remove any compressor system parts without first relieving pressure from the entire system.

WARNING

Do not use gasoline,kerosene, or other low flashpoint solvents. A serious explosion may result.

5.1 Cleaning. Frequency of cleaning depends upon the condition of the system and whether or not a strainer is installed ahead of the trap. Thoroughly clean trap internals. Remove all dirt accumulations from the trap body and mechanism, using detergent and water, or an approved solvent if necessary. Valve seats may be cleaned using a small spiral brush.

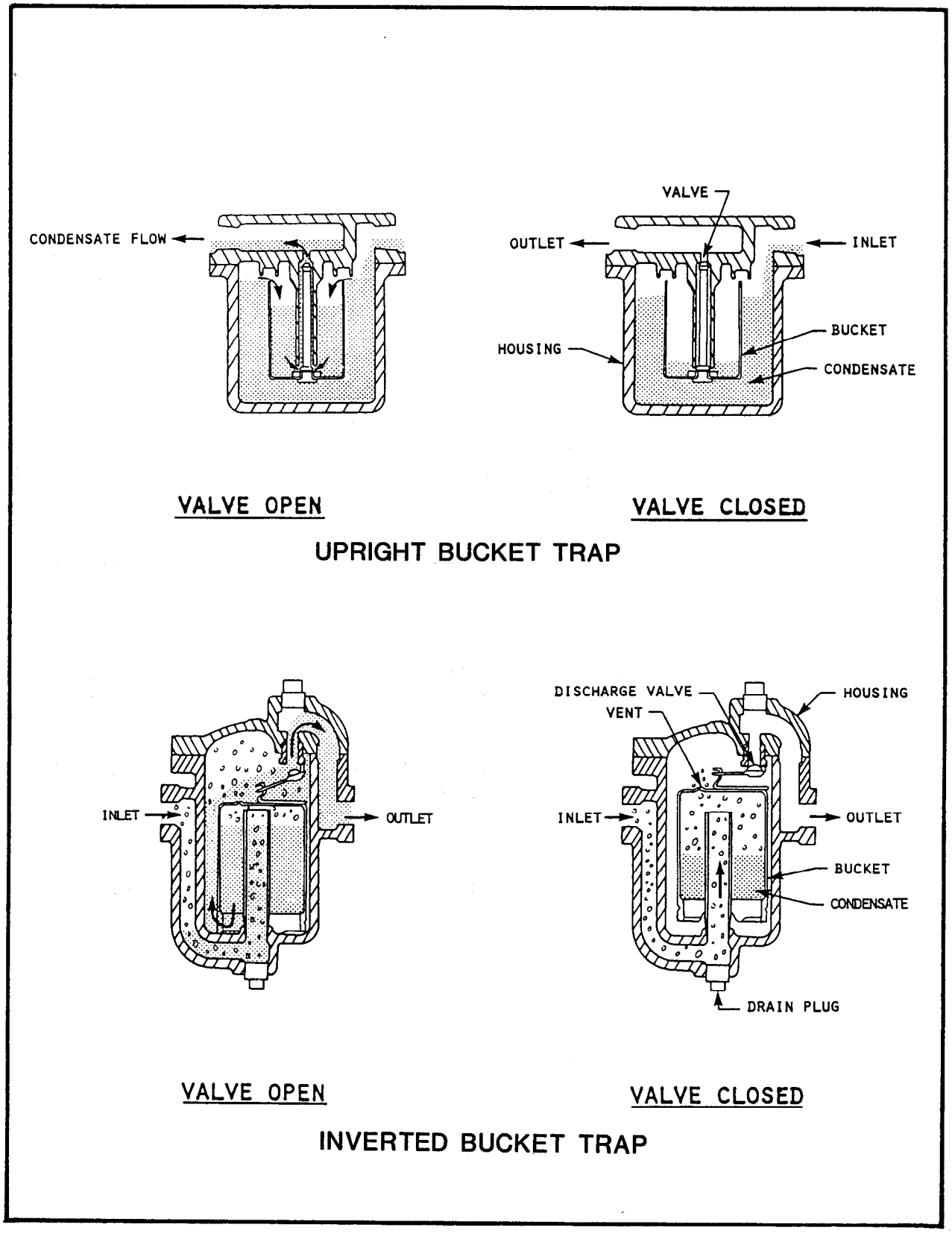

FIGURE 4-7. Drain Traps

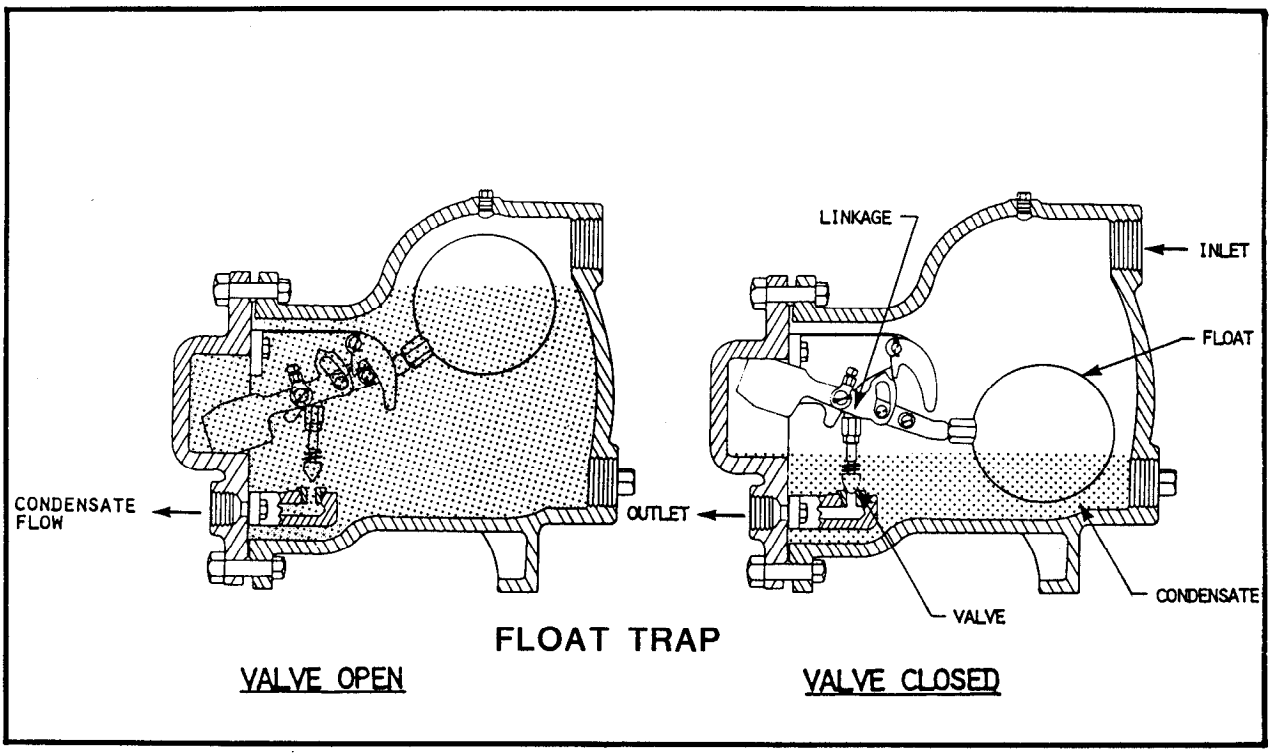

FIGURE 4-7. Drain Traps (Continued)

5.2 Valves and Seats. Replace badly worn or grooved valves and seats. If either the valve or the seat is worn, replace both as they are matched parts. Ensure that the valve and seat are clean before installation. Foreign matter will interfere with proper seating.

5.3 Levers. Levers and linkages wear at pivot points. If excessive play in the linkages is found, they should be replaced. Worn levers affect the bucket or float travel and result in a loss of capacity. Replace corroded or worn pins.

5.4 Buckets and Floats. Replace corroded or damaged buckets or floats.

INTENTIONALLY LEFT BLANK

Section 6. AIR RECEIVERS

1 DESCRIPTION. Air receivers (figure 4-8) serve as reservoirs for the storage of compressed air so that air is available to meet peak demands in excess of the compressor capacity. They also function as pulsation dampers on reciprocating compressor installations. Air receivers are usually vertically mounted, but may be horizontal in the smaller sizes. Receivers are furnished with a relief valve, pressure gauge, drain valve, and inspection openings.

2 NORMAL OPERATION. Drain receivers of accumulated condensate at least once each shift if an automatic drainer is not provided.

3 PREVENTIVE MAINTENANCE INSPECTION.

3.1 Daily Inspection. Check automatic drainer for proper operation, if one is provided.

3.2 Periodic Inspection. Proceed as follows at intervals prescribed by the manufacturer's maintenance schedule.

(a) Check operation of safety valve.

(b) Examine receiver for corrosion and peeling paint.

(c) Inspect the receiver internally for corrosion and dirt accumulation.

(d) Refer to NAVFAC MO-324, Inspection and Certification of Boilers and Unfired Pressure Vessels.

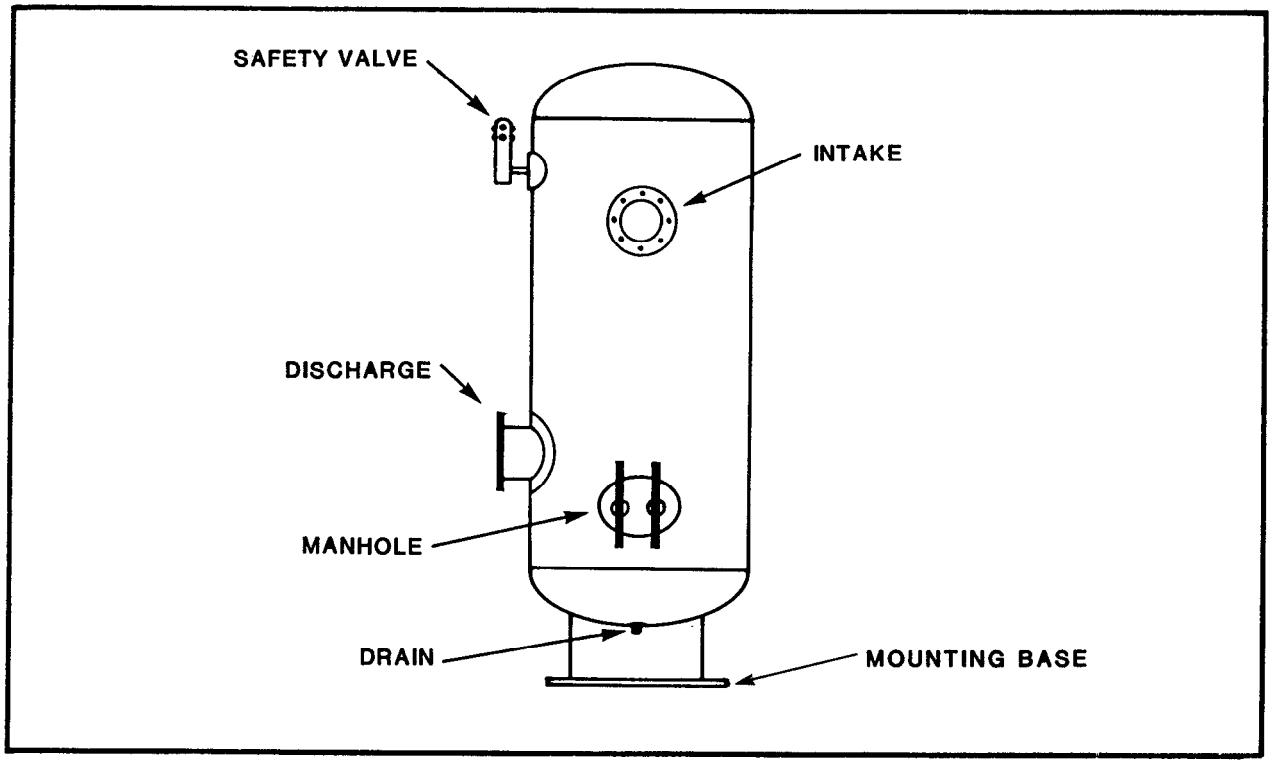

FIGURE 4-8. Air Receiver

4 MAINTENANCE. Proceed as follows:

WARNING

Do not attempt to repair or remove any compressor system parts without first relieving pressure from the entire system.

WARNING

Do not use gasoline, kerosene, or other low flashpoint solvents. A serious explosion may result.

(a) Thoroughly clean the receiver internals annually.

(b) Calibrate pressure gauge semiannually.

(c) Repaint exterior of receiver where there is corrosion or damaged paint.

Section 7. DRYERS

1 DESCRIPTION. Compressed air dryers remove moisture that might otherwise condense in air lines, air tools, and pneumatic instruments. This condensate can cause damage to equipment from corrosion, freezing, and water hammer, and can cause malfunctioning of instruments and controls.

2. TYPES. Three types of air dryers are available: adsorption, deliquescent, and refrigeration.

2.1 Adsorption Type. The adsorptive or desiccant dryer contains a bed of an inert desiccant material, either silica gel or activated alumina, which has high adsorptive surface area for a given weight and volume. This area is in submicroscopic cavities that can hold water vapor removed from the air. When the adsorptive desiccant is completely saturated with water, the water can be driven off again by heating. An airstream passed through the desiccant will carry away the released water vapor restoring the desiccant to its initial adsorptive condition. Adsorption type dryers (figure 4-9) generally consist of two drying towers, each containing an adsorbent, plumbed in parallel. The dryer towers are cycled either manually, semiautomatically, or automatically, so that one drying tower is on stream while the other tower is being reactivated. Reactivation is accomplished by means of electric or steam heaters embedded in the adsorbent or by passing dried process air through the unit.

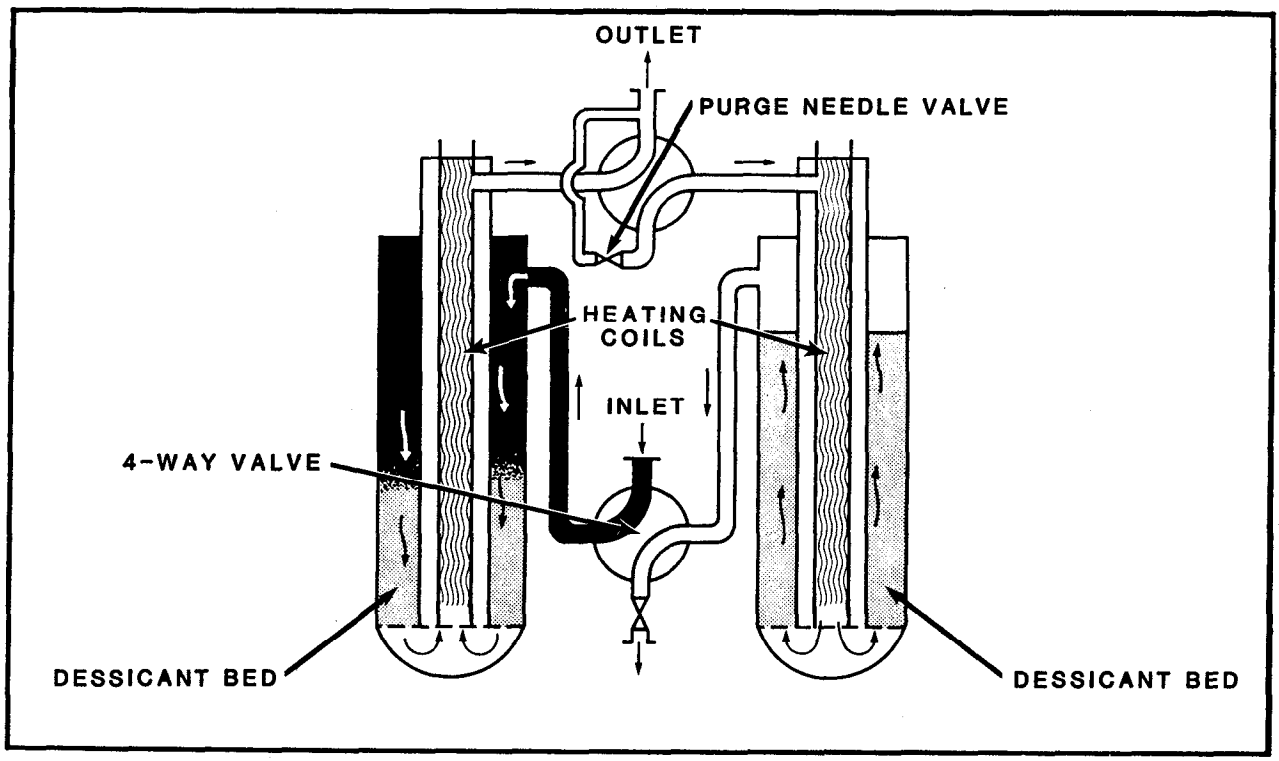

FIGURE 4-9. Flow Diagram of Electric Reactivated Adsorption Dryer

2.2 Deliquescent (Absorption) Type. The deliquescent or absorption dryer is lowest in initial cost but requires continual replenishment of the drying medium (figure 4-10). Simple in design, this type of dryer is a pressure vessel in which a bed of crystalline solids is placed on top of a screen which is located close to the bottom of the vessel. Wet air from the aftercooler and separator enters the bottom of the vessel and flows upward through the bed. As it passes through the bed, the liquid water and vapor present in the air, dissolve the drying medium in what is termed a deliquescent effect. The resulting solution trickles to the bottom of the dryer where it is removed by a trap. The frequency with which the crystalline absorbent material must be replaced is a function of the design thickness of the bed and the amount of water and vapor present in the air entering the dryer.

2.3 Refrigeration Type. Dryers that remove moisture from the air by condensation incorporate a mechanical refrigeration unit (figure 4-11) or cold water, if available. Inlet air passes through the precooler/reheater to the air-to-refrigerant exchanger which contains the refrigeration coils. As the air passes over the coils, further cooling takes place and moisture condenses into droplets. The droplets of oil or water then pass through the moisture/oil separator and are collected and drained through a condensate trap. The cool, dry air is then directed back through the precooler/reheater, warmed by the incoming air and discharged for reuse by the system.

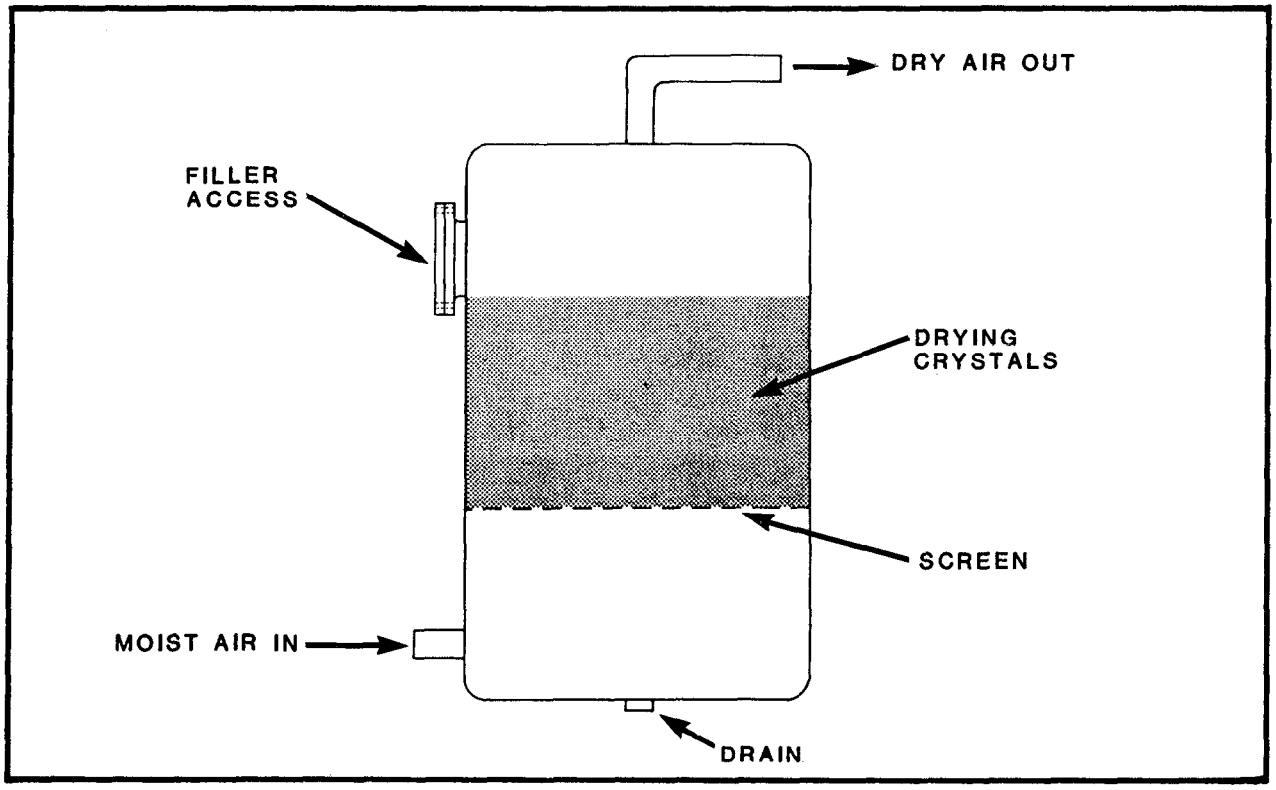

FIGURE 4-10. Deliquescent (Absorption) Dryer

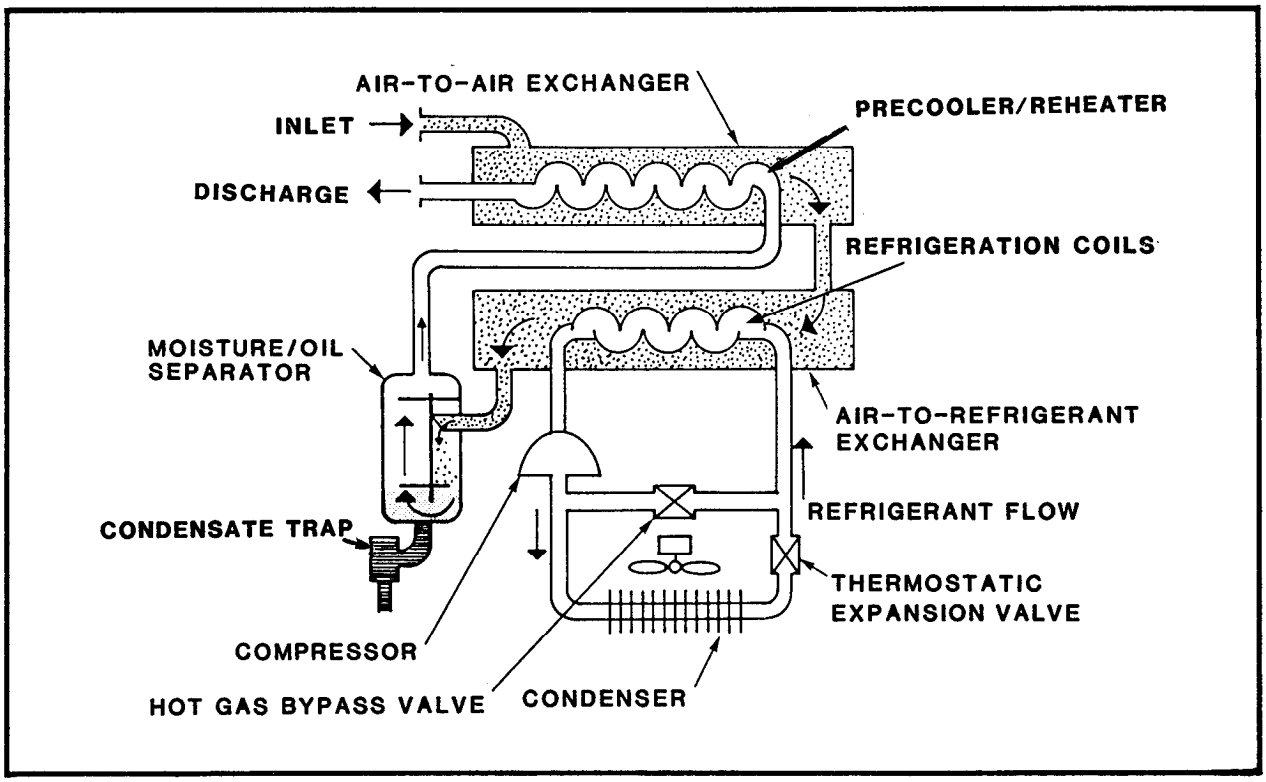

FIGURE 4-11. Flow Diagram of Refrigeration Dryer

3 NORMAL OPERATION.

CAUTION

Do not overrun the unit. Overrunning will result in the tower becoming saturated and unable to adsorb any more moisture. Moisture laden air will then be carried over into the distribution system.

CAUTION

On systems where oil carryover from the compressor is present, provision should be made to protect the desiccant bed of the dryer from becoming oil saturated. Oil deposits in the desiccant bed cause a decrease in drying efficiency and necessitate frequent replacement of the desiccant.

3.1 Adsorption Type Dryer. Maintain normal operating pressure and temperature in the drying towers. Ensure proper operation of condensate traps on steam reactivated dryers. Reactivate drying towers at the intervals specified by the manufacturer if reactivation is not under automatic control.

3.2 Deliquescent Type Dryer. Maintain normal operating temperatures and pressures in the dryer. Maintain an adequate level of drying medium in the dryer. Ensure condensate trap is functioning properly.

3.3 Refrigeration Type Dryer. Ensure condensate trap is draining properly and condensate is not allowed to build up.

4 PREVENTIVE MAINTENANCE INSPECTION.

4.1 Adsorption Type Dryer.

4.1.1 Daily Inspection. Inspect the dryer assembly for the following conditions:

(a) Proper operation of instruments and drain traps where provided

(b) Air or steam leaks

4.1.2 Periodic Inspection. Thoroughly inspect the installation at intervals prescribed by the manufacturer's maintenance schedule. Check the following items:

(a) Safety valves for proper operation

(b) Dryer towers, piping, and valves for corrosion, rust, and peeling paint

WARNING

Do not attempt to repair or remove any compressor system parts without first relieving pressure from the entire system.

(c) Desiccant bed for oil, dirt, or other foreign matter

4.2 Deliquescent Type Dryer.

4.2.1 Daily Inspection. Inspect the dryer assembly for the following conditions:

(a) Proper operation of instruments and drain traps where provided

(b) Air or steam leaks

4.2.2 Periodic Inspection. Thoroughly inspect the installation at intervals prescribed by the manufacturer's maintenance schedule. Check the following items:

(a) Safety valves for proper operation

(b) Dryer towers, piping, and valves for corrosion, rust, and peeling paint

WARNING

Do not attempt to repair or remove any compressor system parts without first relieving pressure from the entire system.

(c) Desiccant level

4.3 Refrigeration Type Dryer.

4.3.1 Daily Inspection. Inspect for the following **conditions:**

(a) Proper operation of condensate drainer

(b) Air leaks

4.3.2 Periodic Inspection. Thoroughly inspect the **installation at intervals** prescribed by the manufacturer's maintenance schedule. **Examine the following** items:

WARNING

Do not attempt to repair or remove any compressor system parts without first relieving pressure from the entire system.

(a) Condition of filter cartridge

(b) Condensate collection chamber and condenser-evaporator tubes for oil and dirt accumulation

5 MAINTENANCE.

5.1 Adsorption Type Dryer. Proceed as follows:

WARNING

Do not attempt to repair or remove any compressor system parts without first relieving pressure from the entire system.

(a) Calibrate instruments semiannually.

(b) Lubricate and repack leaking valves.

(c) Repair all leaks.

(d) Repair or replace defective controls and instruments.

(e) Repaint dryer towers and piping where paint is damaged.

(f) Replace desiccant. Refer to desiccant manufacturer's instructions for proper intervals and instructions.

5.2 Deliquescent Type Dryer. Proceed as follows:

WARNING

Do not attempt to repair or remove any compressor system parts without first relieving pressure from the entire system.

(a) Calibrate instruments semiannually.

(b) Lubricate and repack leaking valves.

(c) Repair all leaks.

(d) Repair or replace defective controls and instruments.

(e) Repaint dryer towers and piping where paint is damaged.

(f) Replace drying medium as required. Refer to drying medium manufacturer's instructions.

5.3 Refrigeration Type Dryer. Proceed as follows:

CAUTION

Do not attempt to service the sealed refrigeration unit; damage to the unit may result. Contact the manufacturer in the event of any malfunction.

(a) Clean or replace filter element as required.

(b) Clean deposits from condensate collection chamber and condenser-evaporator tubes with compressed air or steam.

(c) Lubricate and repack leaking valves.

CHAPTER 5. CONTROLS

Section 1. PRIME MOVER CONTROLS

1 DESCRIPTION. Compressed air delivery is regulated by control of the compressor drive. This is accomplished by varying the drive speed to regulate air output in response to load variations.

1.1 Steam Engine Controls. The steam engine is still used to a limited extent as a prime mover at some Navy installations. When steam engines require replacement,they are usually replaced by electric motors, steam turbines, and internal combustion engines. Where the steam engine is used with reciprocating compressors, it is generally integral to the compressor. Control is normally furnished with steam-driven air compressors by a combination of speed and pressure governors. These governors are of two types, throttling and automatic cutoff.

1.1.1 Throttling Governors. A change in steam pressure changes in compressor speed. This change varies the delivery of the oil pump which is chain-driven from the compressor shaft. Oil discharging from the pump passes through a variable restriction. The back pressure restriction is applied to the diaphragm of the throttle valve. Increased oil delivery and compressor speed raises the pressure on the diaphragm causing the throttle valve to close, restoring the speed of the compressor. A small orifice and return line is provided from the throttle valve diaphragm to permit a small amount of oil to be recirculated to prevent any air from accumulating in the diaphragm. When receiver pressure changes,the pressure control valve varies the restriction in the oil line from the pump. This changes the back pressure applied to the diaphragm of the throttle valve,which changes the compressor speed to restore receiver pressure. This control is used with steam engines of 150 hp or less.

1.1.2 Automatic Cutoff Governors. In the automatic cutoff governor, hydraulic pressure is supplied by the oil pump which is driven from the compressor shaft. Any variation in steam pressure, which changes the speed of the compressor, causes a change in oil pressure from the pump. This pressure change either raises or lowers the piston. The rack on the piston rotates the sprocket, which in turn rotates the cutoff valve rod to reset the cutoff and adjust the speed. Any change in receiver pressure also affects the hydraulic pressure. The pressure control valve, which senses receiver pressure, bypasses some of the oil flow to increase or decrease hydraulic pressure.

1.1.3 Automatic Start-Stop Governors. Automatic start-stop governors (figure 5-l) are also used on steam-driven compressors. This governor has a spring-loaded diaphragm, the underside of which is always open to receiver pressure. When receiver pressure becomes greater than the spring pressure above the diaphragm, the diaphragm is raised, unseating the needle valve. Air then flows to the chamber above the piston attached to the steam valve. Air pressure on this piston forces the steam valve to its seat, cutting off the flow of steam to the compressor. With a decrease in steam pressure, the valve operates in reverse to readmit steam to the cylinder.

1.2 Motor Controls. Where air demand is intermittent, a start-stop control may be provided for the air compressor. This system consists basically of a pressure operated switch connected to the motor starter circuit. When air

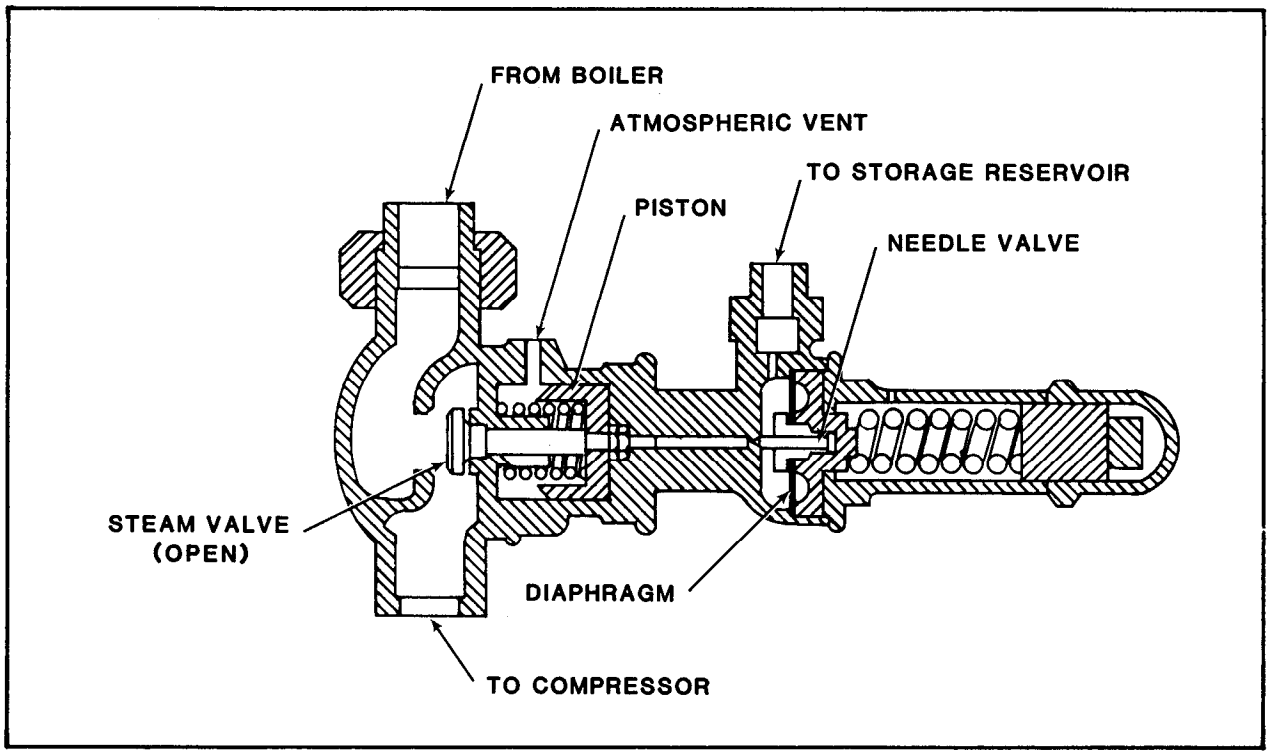

FIGURE 5-1. Automatic Start-Stop Governor

pressure rises to a preset level, the pressure switch contacts open, deenergizing the starter and shutting down the motor. When receiver pressure falls to another preset value, the pressure switch contacts close, starting the driving motor. There are several methods of obtaining variable speed control of electric motors.

1.2.1 Belt and Pulley Arrangement. The variable speed drive unit consists of a constant speed motor and a belt and pulley arrangement to vary the output speed. Speed change is accomplished by varying the distance between two disks that form each pulley. Turning the speed control dial moves one of the disks on the motor shaft toward its companion disk which forms a belt pulley. This causes the belt to climb up on the tapered disks to a larger diameter. Simultaneously, since the belt is of fixed length, the belt causes the two disks of the driven pulley to separate and permit the belt to assume a smaller diameter. This change of pulley diameters results in increased speed of the driven shaft while the motor speed remains constant. Reverse movement of the control dial results in a decrease in the speed of the driven shaft. The use of this arrangement is limited to drivers of 30 hp or less.

1.2.2 Hydraulic or Magnetic Couplings. Although not drivers, these types of couplings are sometimes a part of the driving mechanism and provide variable speed output from a constant speed driver. Hydraulic or magnetic couplings are also used to vary the speed of compressors driven by squirrel cage induction or synchronous motors.

1.3 Steam Turbine Drives. Commonly used with centrifugal or axial compressors, steam turbines can be fitted with variable speed governors which allow the turbine speed to be set at any point within its operating speed

range while the unit is in operation. An oil relay governor (figure 5-2) is one type of variable speed turbine governor. Oil discharging from a pump driven by the turbine shaft is circulated back to a reservoir through an orifice valve. The back pressure developed by the restriction acts on the actuator piston. Movement of the piston is transmitted through a linkage to the pilot valve. The pilot valve admits oil from a different pump to either side of the governor valve piston, opening or closing the governor valve. The lever which is attached to the governor valve piston and moves with it, returns the pilot valve to its neutral position to stop further movement of the governor valve until there is an oil pressure change below the actuator piston. Speed is changed manually by adjustment of the orifice valve.

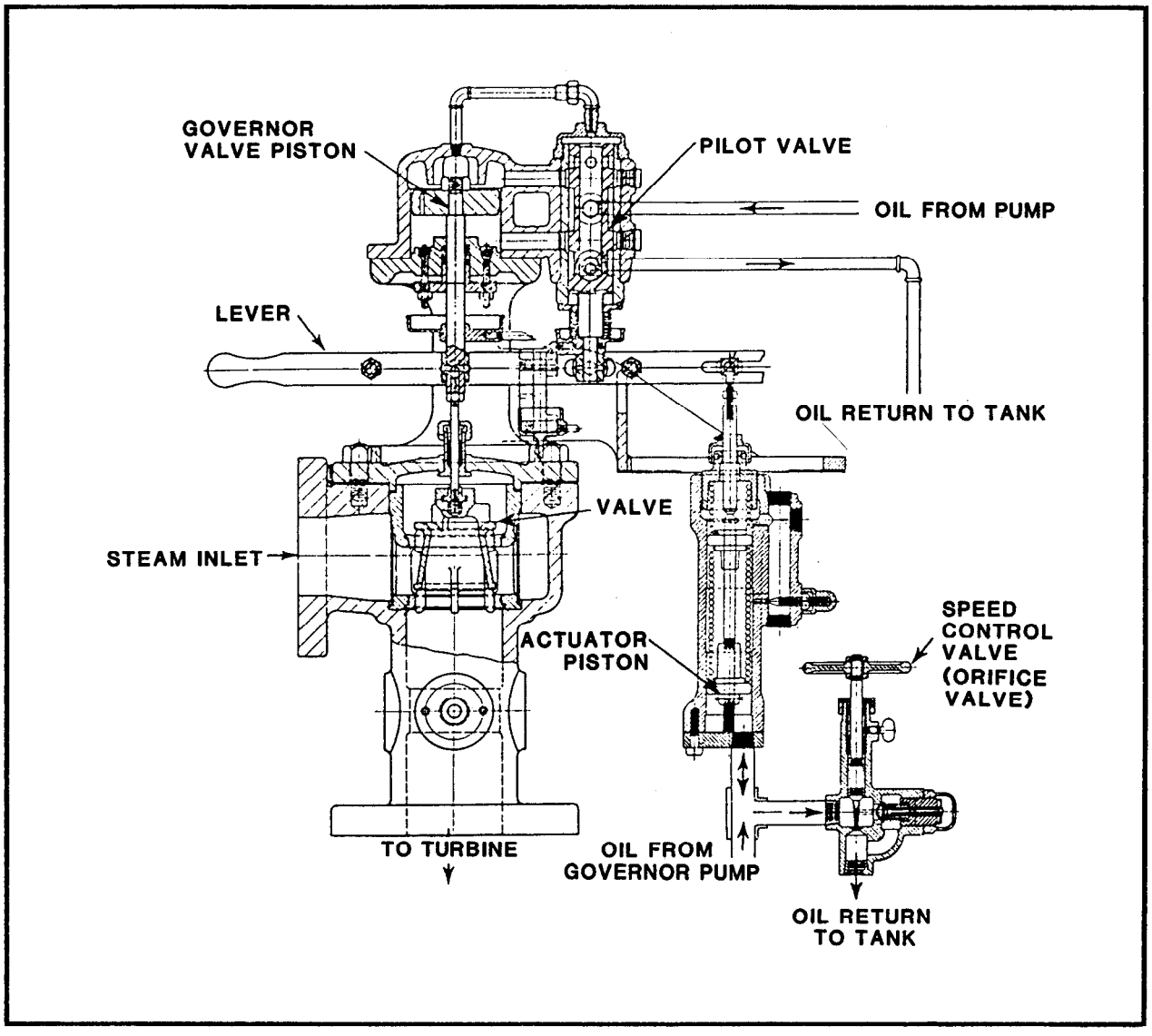

FIGURE 5-2. Variable Speed, Oil Relay Governor

1.4 Reciprocating Engine Drives. Industrial type gas, gasoline, and diesel engines are used to drive compressors by direct connection or V-belt drives. Gasoline engines are available in either 4- or 2-cycle models. These reciprocating engines can be throttled and possess a minimum speed range of approximately 50 to 60 percent of the rated revolutions per minute (rpm).

2 STARTUP.

2.1 Prestart Inspection. Carefully inspect the prime mover control system to ensure that the following prestart requirements are fulfilled.

(a) All installation or repair work has been completed.

(b) System has been cleaned and tested for leaks.

CAUTION

The operator must have a thorough understanding of the control system and its operation.

(c) Manufacturer's instructions and diagrams are available.

(d) All controllers are lubricated.

(e) All piping and tubing are clean and reservoirs of hydraulic governors or couplings are filled.

(f) Correct electric power supply is available for electric controls.

2.2 Startup Procedure. Proceed as follows:

(a) Place prime mover controls in operation in accordance with the manufacturer's instructions.

(b) Make any required adjustments to obtain desired compressor delivery or discharge pressure.

3 NORMAL OPERATION. Adjust controls to regulate compressor output. Check liquid levels in hydraulic systems at intervals prescribed by the manufacturer's maintenance schedule.

4 SHUTDOWN. When a prime mover control is to be taken out of service for repairs, carefully inspect and observe the operation of the control and list all necessary repair work. Switch the compressor to manual control, if possible; tag the system; and remove the control from service in accordance with the manufacturer's instructions.

5 OPERATIONAL PREVENTIVE MAINTENANCE. Report immediately to the supervisor any malfunctioning of the prime mover control system. Where required, maintain correct hydraulic fluid levels in reservoirs. Keep all electrical contact surfaces of components, such as rheostats, clean at all times and lightly greased, if required.

6 PREVENTIVE MAINTENANCE INSPECTION.

6.1 Daily Inspection. Inspect the control system daily for proper operation.

6.2 Periodic Inspection. At intervals prescribed by the manufacturer's maintenance schedule, thoroughly inspect the control system for corrosion, wear, and dirt. Check all governor linkages, mechanisms, springs, and pins for mechanical defects and wear. Examine governor valves for erosion, corrosion, proper seating, and condition of packing and diaphragms. Inspection procedures for electrical control components are contained in NAVFAC MO-205, Central Heating and Steam Electric Generating Plants.

7 MAINTENANCE.

7.1 Lubrication System. Prepare a lubrication schedule for all prime mover controls requiring periodic lubrication. Consult the manufacturer's instructions for frequency and type of lubricant.

WARNING

Do not use gasoline, kerosene, or other low flashpoint solvents. A serious explosion may result.

7.2 Cleaning. In accordance with the manufacturer's maintenance schedule, thoroughly clean all control components. Clean all sludge and accumulations from hydraulic systems with an approved solvent. Thoroughly flush out all control lines and refill system with clean hydraulic fluid.

7.3 Control System Components. Repair or replace defective control system components. Establish a preventive maintenance inspection schedule for all components of the control system. Consult the manufacturer's instructions for maintenance procedures. Perform the following maintenance.

(a) Replace defective diaphragms, bellows, and gaskets.

(b) Carefully inspect, clean, and test governor valves. Repair or replace faulty parts.

(c) Repair or replace defective chains and sprockets.

(d) Replace badly worn linkage pins and bushings.

(e) Repair all leaks.

(f) Repaint piping as required.

(g) Refer to NAVFAC MO-205, Central Heating and Steam Electric Generating Plants for maintenance instructions on electrical control components.

INTENTIONALLY LEFT BLANK

Section 2. COMPRESSOR CONTROLS

1 CAPACITY CONTROL. Capacity control is usually achieved by one of three methods: automatic stop/start, constant speed, and variable speed. Automatic start/stop is primarily limited to electric motor-driven units. Constant speed can be applied to all types of compressors. Automatic start/stop and constant speed control are often combined in a dual control to meet differing demand periods. The variable control is used where the driver is capable of fluctuating with the demand, such as with gas- and steam-driven engines. The method of control used is usually associated with the type of compressor plant being controlled.

1.1 Constant Speed Control. Under constant speed control, the load on the compressor changes,being fully loaded for a certain period of time and then varying between partially and fully loaded during another period of time. There are several ways used to achieve constant speed control.

1.1.1 Reciprocating Compressor. Three methods of control are used for reciprocating compressors: automatic start/stop, constant speed, and variable speed. Automatic start/stop is usually limited to electric motor-driven units. Constant speed is applicable to all types of compressors and drivers. When variable speed is used, the driver can operate at speeds commensurate with the demand.

1.1.1.1 Inlet Valve Unloader. There are several methods of unloading the compressor. One system holds the inlet valves open mechanically during both the suction and compression strokes, thereby preventing the air from being compressed. The unloader (figure 5-3) is located above the inlet valve so that the yoke fingers are almost touching the valve. When the air receiver pressure rises to the preset unloading pressure, a pressure switch operates a solenoid unloader valve which operates and sends air receiver pressure to the inlet valve unloader. The pressure from the air receiver acting on the diaphragm of the inlet valve unloader forces the yoke fingers against the inlet valve, holding it open. The intake air is pushed back out of the inlet valve on the compression stroke so that no compression takes place.

(a) Five-Step Capacity Control.

(1) Figure 5-4 shows a typical airflow diagram of a five-step capacity control system applied to a two-stage, four-cylinder, double action reciprocating compressor. Assuming that the compressor is required to maintain a pressure of 93 to 100 psi, the pressure switches would be set to load and unload as follows: air pressure switch (APS) No. 1, load at 93 psi, unload at 97 psi;APS No. 2, load at 94 psi, unload at 98 psi; APS No. 3, load at 95 psi, unload at 99 psi; and APS No. 4, load at 96 psi, unload at 100 psi. As the receiver pressure reaches the high setting of each pressure switch, 25 percent of the compressor capacity unloads. As receiver pressure falls to the low setting of each switch, 25 percent of the compressor capacity loads. APS No. 1 therefore unloads 25 percent of the compressor capacity at 97 psi and loads 25 percent at 93 psi. As receiver pressure fluctuates between 93 and 100 psi, the compressor capacity varies in five steps: full, 75 percent, 50 percent, 25 percent, and zero capacity.

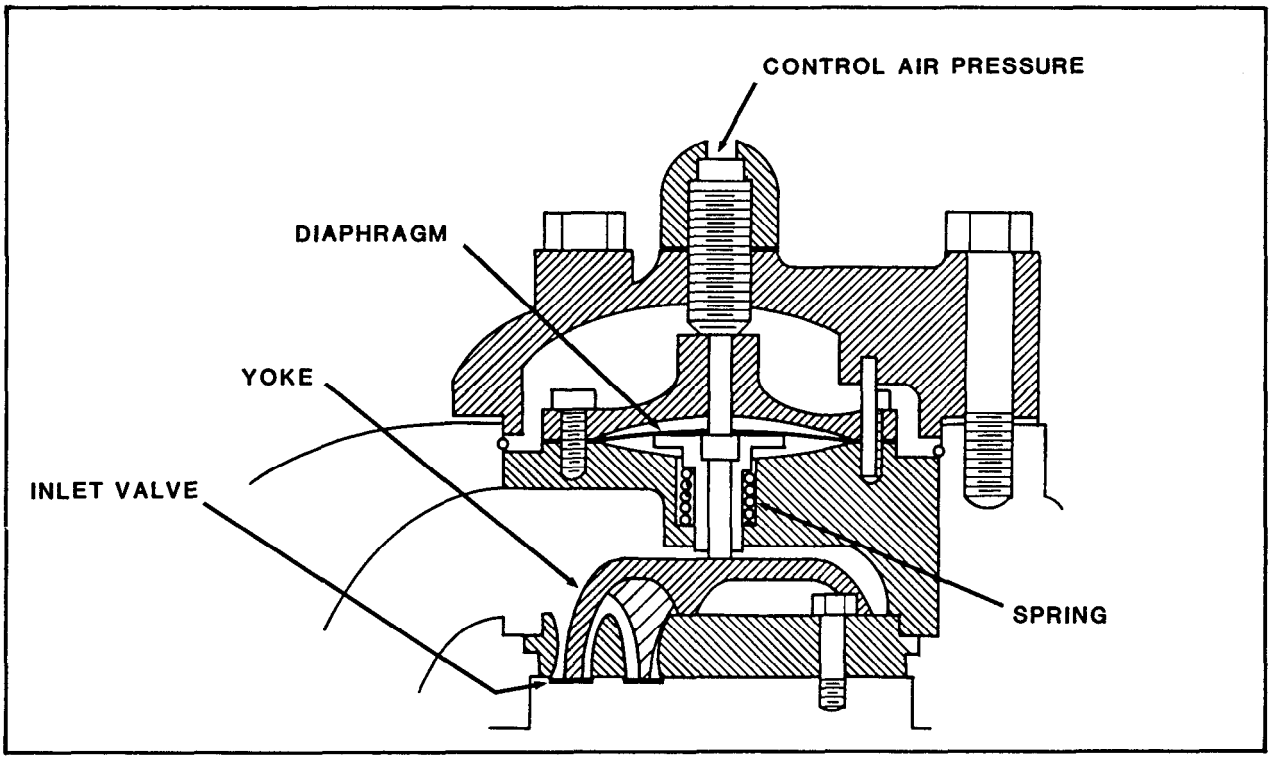

FIGURE 5-3. Inlet Valve Unloader

(2) To understand the operation of this five-step control system which combines the components previously described, refer to figure 5-4. When the compressor is started, the air pressure switches are closed and the solenoids in the unloader valves become energized so that receiver pressure cannot enter the unloading lines and compression is allowed to take place. As receiver pressure builds up and reaches 97 psi, APS No. 1 breaks contact, deenergizing the unloader and allowing 97 psi receiver air to enter control line No. 1, actuating the inlet valve unloader. Twenty five percent of the compressor has become unloaded and compression has been reduced from full to 75 percent capacity. Control lines Nos. 2, 3, and 4 operate in the same way as receiver pressure increases. At 100 psi, all cylinders are unloaded and air compression ceases, but the compressor continues to run under no load. As air is drawn off from the receiver, the pressure begins to drop. When the pressure falls to 96 psi, APS No. 4 makes contact and energizes the unloading of valve 4, which cuts off receiver pressure from the inlet unloader and vents the unloader pressure to atmosphere. The inlet valve unloader releases the inlet valve and normal compression takes place, loading the compressor to 25 percent capacity. If the demand for air increases and receiver pressure continues to decrease,control lines Nos. 3, 2, and 1 will load in sequence.

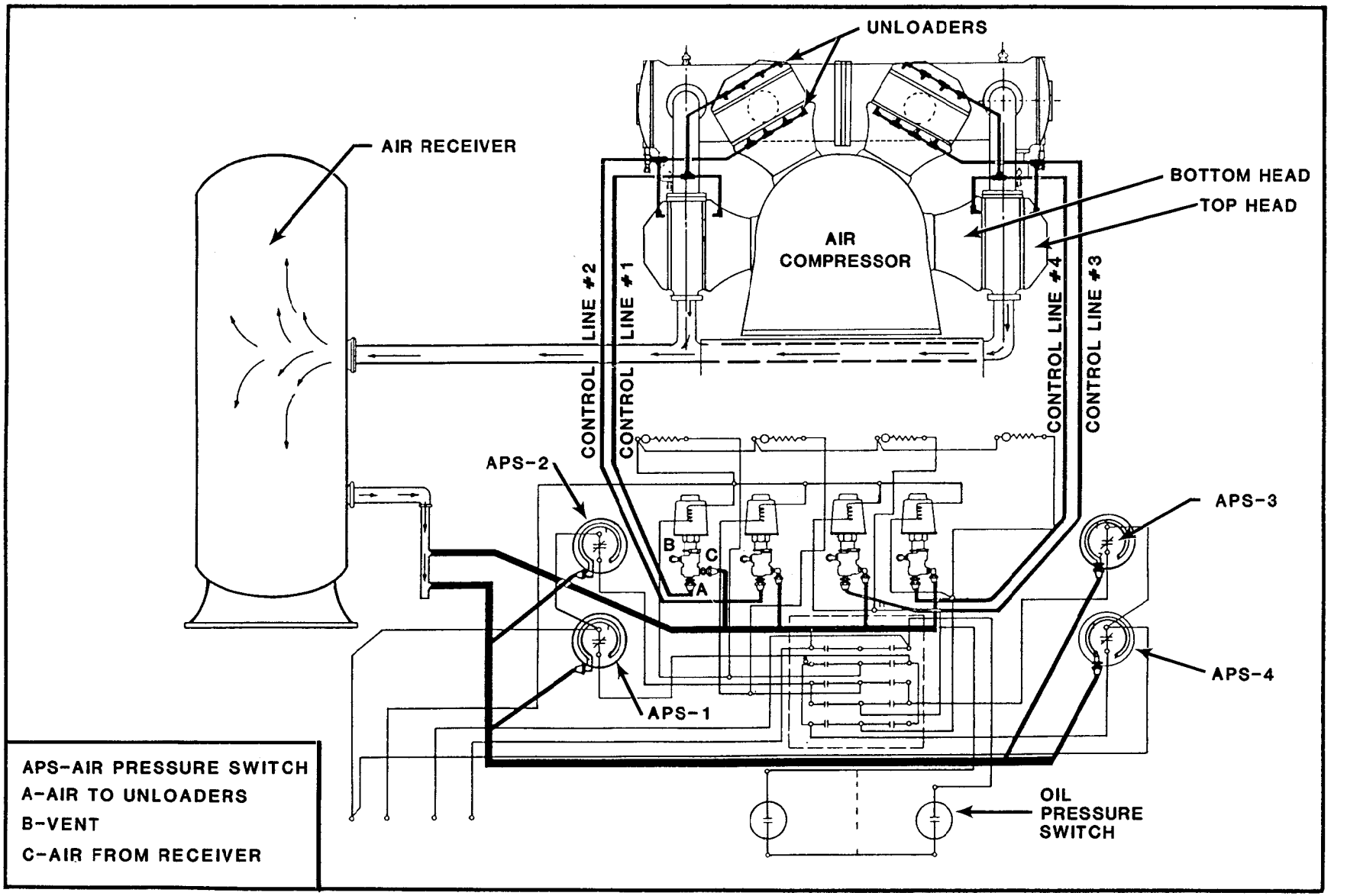

FIGURE 5-4. Airflow Diagram of Compressor With Five-Step Control

(b) Three-Way Solenoid Valve. The unloader valve (figure 5-5) is a three-way solenoid-operated valve actuated by operation of the pressure switch. Connection A of the valve is piped to the inlet valve unloader, connection B is a vent to atmosphere, and connection C is connected to the air receiver. When receiver pressure has reached its preset maximum, the pressure switch contacts open, deenergizing the solenoid. The core of the solenoid moves the operating lever downward to close connection B of the valve and open connection C, allowing receiver pressure to act on the inlet valve unloader. Connection C is held open until receiver pressure drops to the minimum setting of the pressure switch. The switch then closes, energizing the solenoid. Connection C closes, cutting off pressure to the inlet unloader, and connection B opens, releasing the pressure on the unloader to atmosphere.

1.1.1.2 Clearance Pockets. Another method of unloading a compressor is by the use of clearance pockets built into the cylinder. Normal clearance is the volume at the end of the piston and under the valves when the piston is at the top of the compression stroke. Each end of the cylinder is fitted with two clearance pockets which are connected with, but cut off from, the cylinder by air-operated clearance valves. Each clearance pocket can hold one-quarter of the air compressed by the cylinder in one stroke. When both pockets at one end of the cylinder are open, no air is taken into that end of the cylinder. The clearance valves are separate from, and work independently of, the main compressor valves. They are similar to the regular inlet valves but have an air-operated lifting yoke which operates in the same manner as the inlet valve unloader described in paragraph 1.1.1.1. Figure 5-6 illustrates the operation of the clearance pockets and the corresponding indicator diagrams of an air compressor under five-step clearance control.

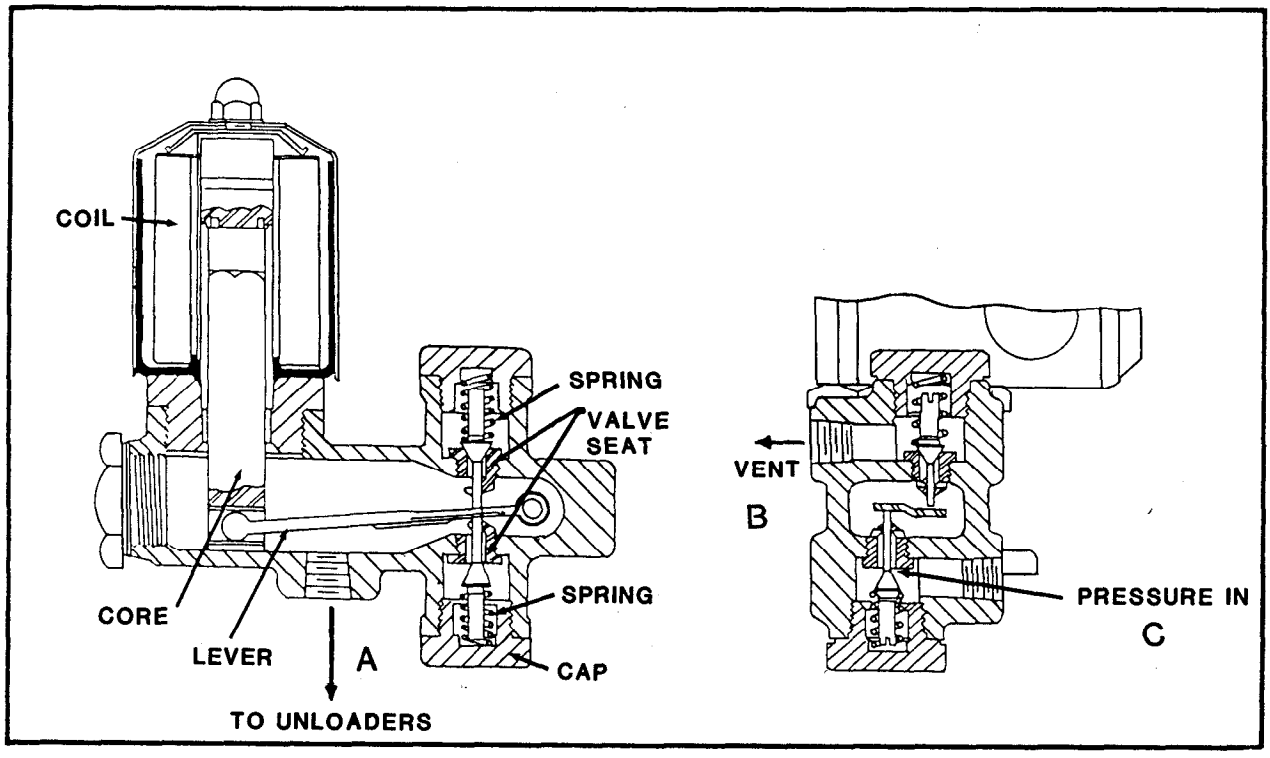

FIGURE 5-5. Three-Way Solenoid Valve

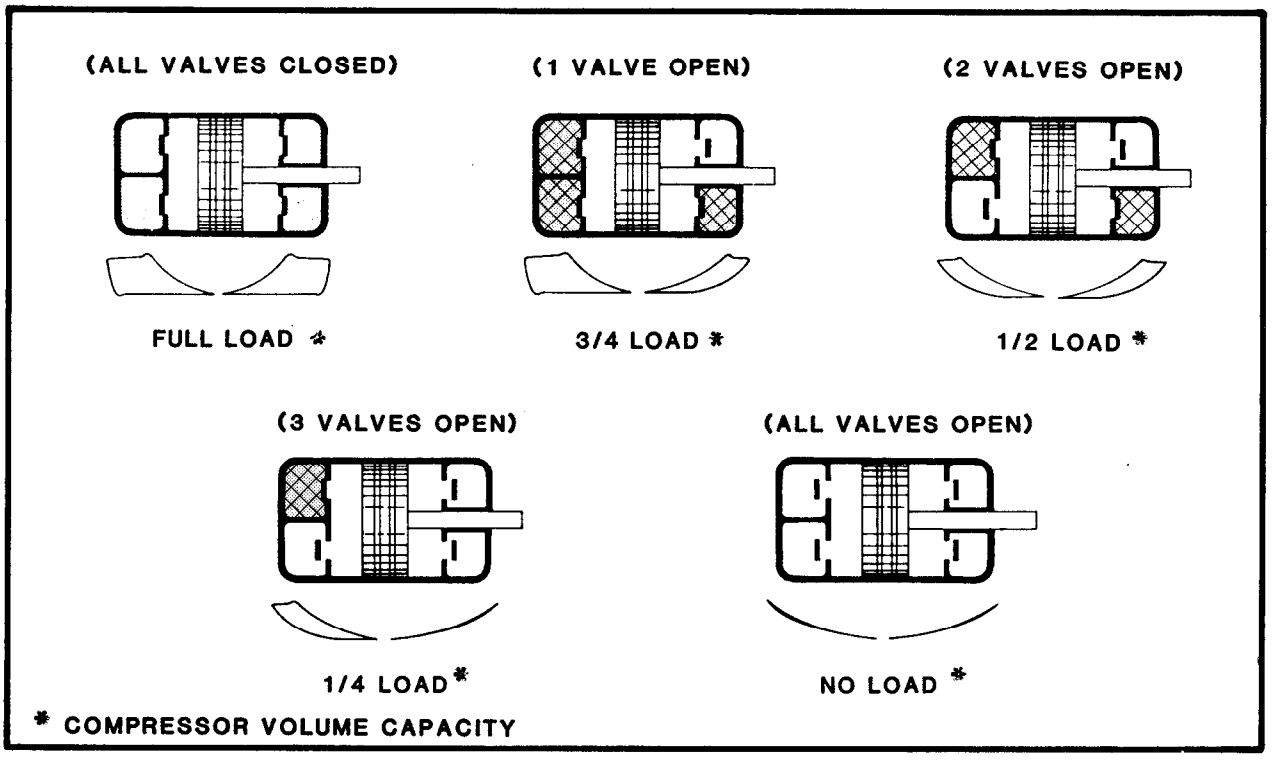

FIGURE 5-6. Five-Step Clearance Control

1.1.2 Centrifugal Compressor. Five methods are generally used to control centrifugal compressors.

1.1.2.1 Inlet Guide Vanes. Centrifugal compressor control may be accomplished by the use of adjustable inlet guide vanes. The purpose of the guide vanes is to direct the airflow and distribute it uniformly into the eye of the impeller. The adjustable vanes located at the first-stage inlet or the inlet to each stage, are used to modify the pressure-volume characteristics of the compressor. Guide vanes are manually or automatically adjustable.

1.1.2.2 Blowoff of Output. Blowoff and recirculation are occasionally used but do not save any power because the compressor is continually operating at full load pressure and inlet volume. Blowoff relieves excess gas to the atmosphere, and recirculation puts throttled gas back through the compressor.

1.1.2.3 Intake Throttling. Intake throttling is widely used for control of constant speed machines. Either inlet butterfly valves or inlet guide vanes may be automatically or manually controlled. Power conservation is less than with variable speed, but is still significant.

1.1.2.4 Two-Step Control. Two-step control is mainly useful during load operations below 50 percent capacity. The amount of flow is dependent upon two set points. Operation is at full load until the upper set point is reached, then the unit is unloaded and operates at 15 percent flow until the lower set point is reached and the system reverts back to full load. The action is cyclic, maintaining an intermediate pressure value between the set points. Two-step control is not recommended if a complete load-unload cycle

occurs more often than every 3 minutes because this will cause excessive wear on the bearings and valves.

1.1.2.5 Butterfly Valves. Centrifugal compressor control may also be accomplished by throttling the suction or discharge of the compressor with a butterfly valve.

1.1.3 Rotary Sliding Vane Compressor. There are several common methods for maintaining constant speed control of rotary sliding vane compressors.

1.1.3.1 Automatic Start/Stop at Predetermined Pressures. Speed control is maintained automatically according to predetermined pressures.

1.1.3.2 Blocking the Compressor Inlet. Blocking or unblocking of the compressor inlet maintains speed control.

1.1.3.3 Intake Unloaders.Intake unloading consists of an automatic valve located at the compressor suction. This valve closes off the compressor intake, thereby preventing the compressor from taking in air. The intake unloader (figure 5-7) incorporates two valves in one body, an air piston-operated inlet valve and a pressure release valve. When the compressor is delivering air, the inlet valve is in its normal open position and the release valve is closed. When receiver pressure builds up to the unloading pressure, a pressure switch deenergizes a three-way solenoid pilot valve which admits receiver pressure to the piston of the inlet valve. The piston rises, closing the inlet valve and opening the pressure release valve. The pressure release valve relieves air pressure from the portion of the compressor discharge line between the compressor and the discharge check valve. This permits unloaded operation of the compressor at atmospheric pressure. When receiver pressure drops to the lower setting of the pressure switch, the contacts close, energizing the solenoid pilot valve. This cuts off receiver pressure and vents the pressure in the unloader to atmosphere. The inlet valve is opened, permitting the compressor to load.

1.1.4 Rotary Twin-Lobe Compressor. Control methods for the rotary twin-lobe are the same as for the rotary sliding vane compressor.

1.1.5 Rotary Liquid Piston Compressor. Control methods for the rotary liquid piston compressor are the same as for the rotary sliding vane compressor.

1.1.6 Axial Flow Compressor. Control methods for the axial flow compressor are the same as for the centrifugal compressor.

1.2 Variable Speed Control. There are many methods available to vary the speed of the compressor to produce a more efficient system. Those listed below may not apply to all types of compressors, but generally, more than one method deserves consideration during a system design or retrofit. The following methods vary in applicability depending on energy source, horsepower, weight, revolutions per minute, and cost requirements.

1.2.1 Gasoline, Steam, and Diesel Engines. These engines can be manually controlled or load controlled by the use of a governor.

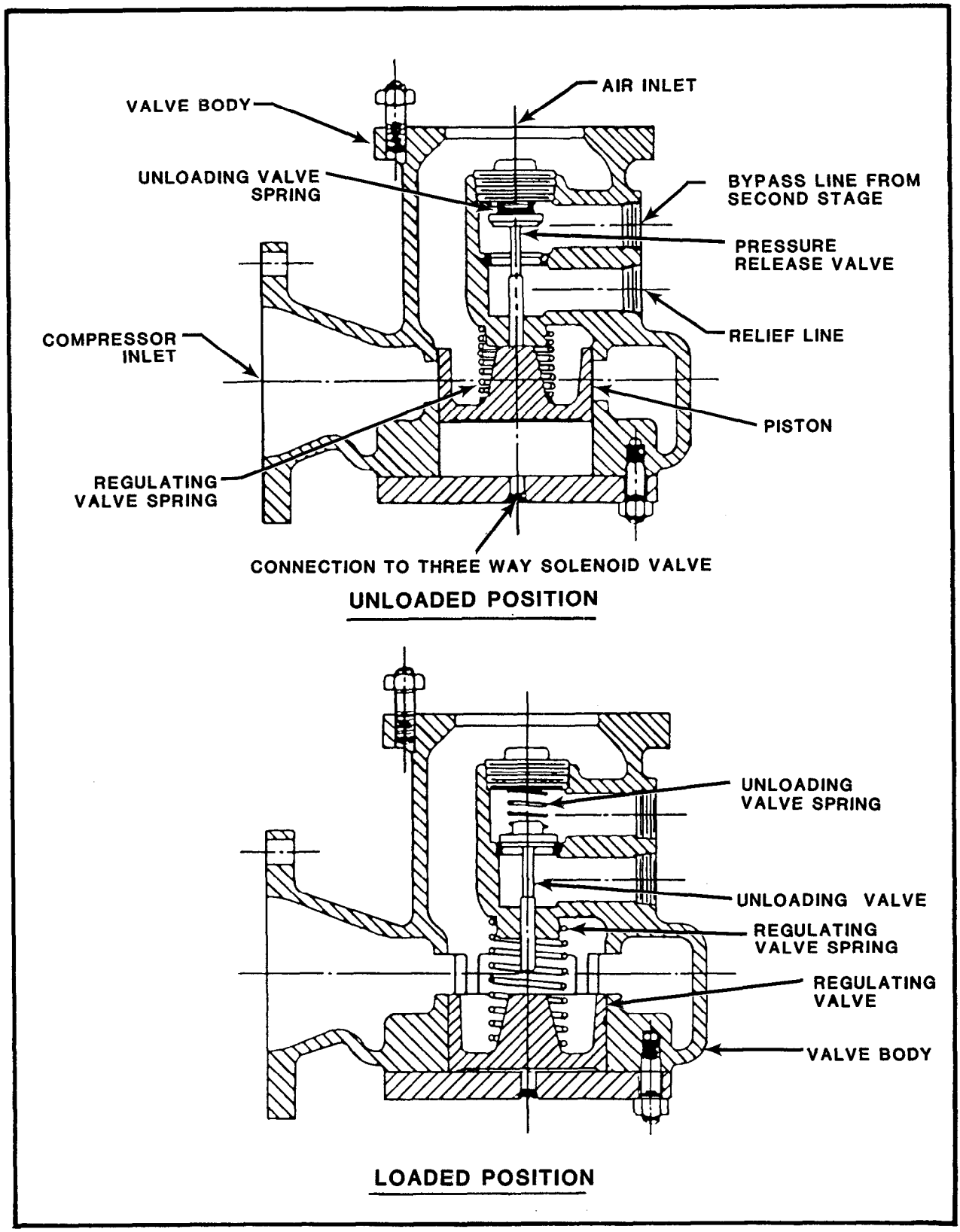

FIGURE 5-7. Intake Unloader for Rotary Sliding Vane Compressor

1.2.2 Multiple Winding Motors. The advantages of the multiple winding method are that it is relatively simple and inexpensive. The disadvantage is that the number of different available speeds is limited. The multiple winding method is therefore unsuitable for applications that require a continuously varying speed of rotation.

1.2.3 Variable Diameter Pulleys. A typical variable diameter pulley has conical faces that can be adjusted so that the distance between the faces is variable. If the drive belt for the pulley has edges that are tapered to match the shape of the pulley faces, the belt can be made to contact the pulley anywhere along the pulley faces, depending on the distance between the pulley faces. This effectively changes the pulley diameter. At larger pulley diameters, the shaft driven by the pulley rotates more slowly. At smaller pulley diameters,the shaft driven by the pulley rotates more quickly. The advantages of the variable diameter method are that it is relatively simple and it is comparatively inexpensive. The disadvantages are that its use is limited to applications requiring approximately 30 hp or less; the pulleys require careful alignment; and the belts are sensitive to small misalignments and can be damaged easily.

1.2.4 Geared Transmissions. A geared transmission can be used to vary the speed of rotation of the drive shaft in discrete steps. The advantages of geared transmissions are that they are relatively reliable and can be used for higher power applications. The disadvantages are that they are expensive, relatively inefficient, and difficult to install.

1.2.5 Fluid Couplings. Fluid couplings, or torque converters, can be used to provide a continuously variable output to the shaft of a centrifugal pump. The advantages of this type of pump are that fluid couplings are simpler than geared transmissions,are easier to install, and are continuously variable. The principal disadvantage of these pumps is that they are comparatively inefficient.

1.2.6 Eddy Current Couplers. Eddy current couplers are magnetic clutches in which the intensity of the magnetic field, which couples the two major rotating parts of the clutch, can be varied. An increase in field intensity increases the amount of magnetic coupling, with a consequent increase in torque. The advantages of the eddy current coupler are that it is relatively simple and reliable. Its principal disadvantage is that it is inefficient. The slippage developed in the clutch causes a loss of energy that is dissipated in the form of heat. Eddy current couplers and other devices that allow the motor to run at full speed but at reduced torque, have an adverse effect on the power factor of the motor.

1.2.7 Synchronous Inverters. Synchronous inverters are electronic devices that vary the input power frequency to the motor. Advantages of the synchronous inverter as a means to change motor rpm are numerous. Typical output frequencies of a synchronous inverter range from 0 to 90 hertz, which produces a wide and continuous range of motor speeds. The synchronous inverter may be mounted in a remote location not requiring mechanical retrofit changes. Because the synchronous inverter is not a mechanical device, maintenance is minimal.

2 STARTUP.

2.1 Prestart Inspection. Carefully inspect the control system installation to ensure that the following prestart requirements are fulfilled.

(a) All installation or repair work has been completed.

(b) System has been cleaned and tested for leaks.

CAUTION

The operator must have a thorough understanding of the control system and its operation.

(c) Manufacturer's instructions and control piping and wiring diagrams are available.

(d) Correct electric power is available for operation of electrical components.

(e) All piping and tubing are blown out clean.

(f) All control components are installed, tested, and adjusted in accordance with the manufacturer's instructions.

2.2 Startup Procedure. Proceed as follows:

(a) Set unloading device to unload position before placing the compressor in operation.

(b) Place the compressor in service per manufacturer's instructions or as given in chapters 2 and 3.

(c) Place the control system in service following the procedures outlined in the manufacturer's instruction manual.

3 NORMAL OPERATION. Adjust the control system to obtain system pressure or compressor capacity. Drain condensate from moisture separators and strainers once each shift.

4 SHUTDOWN. If the compressor control system is to be taken out of service for repairs, carefully inspect the installation, observe the operation, tag the system, and list all necessary repairs. Transfer the compressor to manual control, if possible, and remove the controller from service.

5 OPERATIONAL PREVENTIVE MAINTENANCE. Report immediately to the supervisor any malfunction in the control system or components. Thoroughly drain all moisture from pneumatic control line separators at least once each shift.

6 PREVENTIVE MAINTENANCE INSPECTION.

6.1 Daily. Inspect the compressor control system for operation of all control components.

6.2 Periodic Inspection. At intervals prescribed by the manufacturer's maintenance schedule, thoroughly inspect all control system components for wear, corrosion, dirt, or defects.

7 MAINTENANCE. Prepare a lubrication schedule for all compressor control system components. Consult the manufacturer's instructions for frequency and type of lubricant to be used. Obtain detailed instructions from the manufacturer and use these instructions when making adjustments to, and calibrations of, the control system components. Only one person should be responsible for the adjustments and calibrations of the control system components.

7.1 Control System Components. Prepare a periodic maintenance program for all compressor control system components. Refer to the manufacturer's manuals for maintenance instructions for each particular control component. Perform the following maintenance work as required.

WARNING

Do not use gasoline, kerosene, or other low flashpoint solvents. A serious explosion may result.

(a) Carefully clean, inspect, and test the operation of unloaders, clearance control, and pilot valves. Regrind or replace worn valve seats and disks. Replace badly worn valve stems and defective diaphragms. Check spring tension adjustments.

(b) Thoroughly clean moisture separators and strainers. Remove all oil deposits. Replace defective strainer elements.

(c) Refer to NAVFAC MO-205, Central Heating and Steam Electric Generating Plants, for maintenance instructions for electrical control components.

7.2 Piping. Thoroughly clean all control system piping and test for leaks. Lines should be thoroughly blown out with compressed air until all oil and dirt have been removed. Repair all leaks and repaint piping as required.

APPENDIX A

ABBREVIATIONS AND ACRONYMS

APPENDIX A

ABBREVIATIONS AND ACRONYMS

APS	Air pressure switch
CFM	Cubic feet per minute
CPR	Cardiopulmonary resuscitation
F	Fahrenheit
HP	Horsepower
LTS	Long-term storage
PM	Preventive maintenance
PSI	Pounds per square inch
PSIG	Pounds per square inch gauge
RPM	Revolutions per minute
SCFM	Standard cubic feet per minute
VPI	Vapor phase inhibitor

APPENDIX B

EVALUATION OF LOSSES IN COMPRESSED AIR SYSTEMS

APPENDIX B

EVALUATION OF LOSSES IN COMPRESSED AIR SYSTEMS

1 COMPRESSED AIR SYSTEM LEAKS. Leakage of compressed air is a problem at industrial installations and, if uncorrected, will result in significant monetary losses (table B-l). Leakage can result from corrosion in underground piping, damaged joints, and defective fittings and valves. A relatively simple test has been devised which rapidly and economically determines whether a distribution line is leaking and if so, the magnitude of the losses.

2 TEST METHOD. This test requires that a segment of a compressed air distribution line be pressurized, sealed, and checked by use of a pressure gauge to determine if the line is leaking. If there is no pressure decrease, there is no leakage. If the pressure does decrease, a leak is indicated. The amount of leakage can be determined and a graph prepared that determines the loss at operating pressure.

3 TEST EQUIPMENT. The following test equipment is simple and inexpensive:

- Pressure gauge
- Stopwatch

4 TEST PRECAUTIONS. This test produces valid results as long as the relationship between pressure and flow rate is linear. Assuming a sonic exit velocity, the relationship will be linear as long as the ratio of the atmospheric pressure to the line pressure exceeds the critical pressure ratio of 0.53 for gases. Thus, to ensure maximum accuracy, test data should not be used if the pressure gauge registers less than 20 psig.

5 TEST PROCEDURES. The following steps must be performed to complete a pressure decay test.

(a) Obtain scale drawings of the section to be tested. Verify drawings in the field and calculate the volume of the section to be tested.

(b) Install a pressure gauge at a convenient location.

(c) Secure all loads the line supplies.

(d) Isolate the line from the compressed air system.

(e) Immediately begin taking readings at the pressure gauge but do not try to start the moment the valve is closed. Observe the pressure gauge and begin timing when the pointer passes a convenient mark. Example: On a lOO-psig system, wait for the pressure gauge to reach 95 psig before starting the stopwatch.

(f) Note the time at convenient pressure intervals (5 or 10 psi increments). Continue data recording until 20 psig is reached. A suggested format for collecting this data in the field is shown in table B-2.

TABLE B-1. Amount and Cost of Air Leaks

Air Press. (psig)	Size of Hole (inches)									
	1/64		1/32		1/16		1/8		1/4	
	Air Losses (cfm)	Cost Per Month $	Air Losses (cfm)	Cost Per Month $	Air Losses (cfm)	Cost Per Month $	Air Losses (cfm)	Cost Per Month $	Air Losses (cfm)	Cost Per Month $
50	0.146	3.15	0.594	12.80	2.37	51.00	9.42	203.50	37.8	815.00
60	0.169	3.65	0.682	14.75	2.73	59.00	10.9	235.50	43.5	940.00
70	0.192	4.15	0.773	16.70	3.09	65.50	12.3	265.50	49.4	1,065.00
80	0.214	4.60	0.864	18.65	3.46	74.50	13.8	298.00	55.2	1,190.00
90	0.237	5.10	0.955	20.60	3.81	82.00	15.3	330.50	61.1	1,330.00
100	0.260	5.60	1.05	22.70	4.19	90.50	16.8	363.00	66.9	1,445.00
110	0.279	6.00	1.14	24.60	4.55	98.00	18.2	393.00	72.8	1,570.00
120	0.305	6.60	1.23	26.55	4.93	106.50	19.6	423.50	78.6	1,695.00
130	0.325	7.00	1.33	28.70	5.28	114.00	21.1	455.50	84.5	1,825.00
140	0.351	7.60	1.41	30.45	5.64	122.00	22.4	484.00	89.7	1,935.00
150	0.370	8.00	1.51	32.60	5.98	129.00	23.8	515.00	95.5	2,060.00
175	0.429	9.25	1.72	37.15	6.89	149.00	27.4	590.00	110.0	2,375.00
200	0.494	10.65	2.00	43.20	7.93	171.00	31.6	680.00	127.0	2,745.00

[1] Airflow is based on nozzle coefficient of 0.64. Costs of air losses based on a system continuously pressurized with compressed air costs of $0.50 per 1,000 cubic feet.

(g) Using the field data, construct a chart as shown in table B-3. The LOSS column values (Q) are calculated by using the field data in formula 5.1(a).

(h) On graph paper, plot Q on the Y axis and P on the X axis.

(i) Using linear regression, calculate the equation for the best fitting straight line and solve for Qnominal.(Qnominal is defined as normal operating pressure.)

TABLE B-2. Pressure Test Data

Pressure (psig)	Time (min:sec)
90	0:00
80	10:42
70	23:17
60	38:34
50	58:56
40	87:28
30	135:01

TABLE B-3. Calculation of Losses

Pressure (psig)	Average Pressure (psig)	Time (min:sec)	Time (min)	Loss (scfm)
90-80	85	10:42	10.70	40
80-70	75	23:17	23.28	34
70-60	65	38:34	38.57	28
60-50	55	58:56	58.93	21
50-40	45	87:28	87:47	15
40-30	35	135:01	135.02	9
30-20	25	277:40	277.67	3

5.1 Test Formula. In determining the air losses, use the following mass loss formula.

(a) $$Q = \frac{35.852\ V}{(T+460)(t_F - t_I)}\ (PI-PF)$$

Where: Q = volumetric airflow (scfm)
V = volume of tank, ft^3
T = temperature, °F
P = pressure, psig
t = time, minutes
I = initial
F = final

(b) Although the regression equation can be calculated by hand, the calculations are quite laborious. It is strongly recommended that an inexpensive hand-held calculator with statistics capability or an in-house computer program be used as the information can then be rapidly and accurately calculated.

5.2 Example. The following example illustrates the pressure decay test procedure.

(a) A section of l0-inch compressed air line is suspected of leakage. The line is located on drawings and verified by a field inspection. Using an engineering scale and the drawing, the length of line is found to be 1,000 feet. Calculating the volume of the line:

$$V = \frac{\pi d^2 1}{4} = \frac{1}{4}\pi \times \left(\frac{10.75\ in}{12\ in/ft}\right) \times 1{,}000\ ft$$

$$V = 630.3\ ft^3$$

(b) A pressure gauge is installed on the line at an outlet valve, and all loads on the line are secured. With a person watching the gauge, the line is isolated from the central air distribution system.

(c) The pressure gauge, which had indicated 96 psig, begins to fall immediately. When the gauge reaches 90 psig, the stopwatch is started. Time is recorded at l0-psi intervals as shown in table B-2. (A stopwatch with a lap counter makes this easier.)

(d) Assuming an ambient temperature of 68°F, the losses can be calculated for each pressure interval, using equation 5.1(a). Results are shown in table B-3.

(e) The data can be plotted as shown in figure B-l to determine how well the test data fits a straight line. Although test data from an actual test will normally be offset from a straight line to some degree, severe deviations will require that the test be repeated.

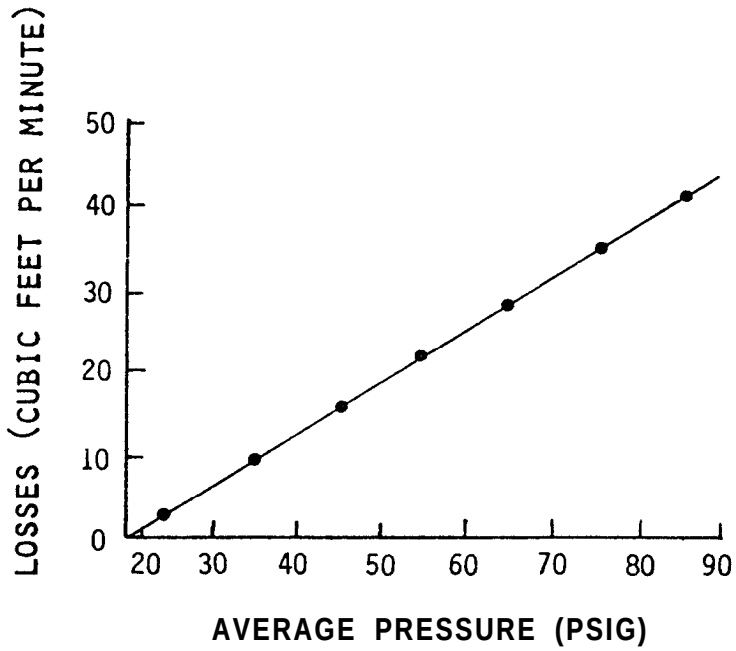

FIGURE B-l. Loss (cfm) vs Pressure (psig)

(f) Calculating the linear regression formula from the available data and making the following substitutions:

X = avg press. (P)
Y = loss (Q)
Y = mX+b

yields the equation: Q = 0.62 P - 12.75.

Losses at operating or nominal pressure (96 psig) are calculated:

Q_{96} = 0.62 (96) - 12.75 Q_{96} = 47 scfm

At a cost of 50 cents for 1,000 cubic feet of compressed air, this represents: $12,350/year (dollar figure will vary based on facility costs for compressed air).

6 CORRECTIVE MEASURES. Qnominal represents the loss in the compressed air system at operating conditions, assuming a constant pressure over the length of pipe in question. This value, taken with the activity's cost to produce compressed air, can be used, as justification,to develop projects to repair or replace sections of compressed air line.

REFERENCES

1. NAVFAC DM-3.5, Compressed Air and Vacuum Systems.

2. NAVFAC MO-205, Central Heating and Steam Electric Generating Plants.

3. NAVFAC MO-209, Maintenance of Steam, Hot Water, and Compressed Air Distribution Systems.

4. NAVFAC MO-225, Industrial Water Treatment.

5. NAVFAC MO-322, Inspection of Shore Facilities.

6. NAVFAC MO-324, Inspection and Certification of Boilers and Unfired Pressure Vessels.

INDEX*

A

Abbreviations and Acronyms A-1
Air Compressor Plant
  Breakdown Maintenance 1-7
  Compressed Air Leaks 1-7, B-1
  Engineering Responsibilities 1-5
  Maintenance Responsibilities 1-5
  Operation, Maintenance, and Supervision ..... 1-5 thru 1-7
  Operator Maintenance 1-6
  Operator Responsibilities 1-5
  Preventive Maintenance 1-7
  Supervisory Responsibilities 1-5
  Troubleshooting ..... 1-B thru 1-12 (T)
Air Dryers ..... 4-21 thru 4-26
  Maintenance 4-25
  Operations 4-23
  Preventive Maintenance 4-24
  Types 4-21
Air Filters ..... 4-1 thru 4-4
  Inspection 4-1
  Maintenance 4-2
Air Receivers 4-19
  Maintenance 4-20
  Operations 4-19, 5-1, 5-7, 5-B, 5-10, 5-12
  Preventive Maintenance 4-19
Auxiliary Equipment ..... 4-1 thru 4-26
  Air Receivers 1-3, 4-19, 4-20, 5-1, 5-7, 5-B, 5-10, 5-12
  Air Dryers ..... 1-3, 4-21 thru 4-26
  Air Filters ..... 1-1, 4-1 thru 4-4
  Intercoolers and Aftercoolers ..... 1-11, 2-6, 2-16, 3-6, 4-7 thru 4-12, 4-15
  Separators 1-3, 2-23, 4-10, 4-13, 4-14
  Silencers 1-1, 4-5, 4-6
  Traps ..... 1-3, 3-6, 3-7, 4-9, 4-15 thru 4-17, 4-23, 4-24

C

Compressed Air System Losses B-1
Compressor
  Controls ..... 3-6, 3-7, 3-9, 3-10, 5-7 thru 5-16
    Constant Speed ..... 5-7 thru 5-12
    Control System Maintenance 5-16
    Piping Maintenance 5-16

*(T) = Table (F) = Figure

Compressor (Continued)
Controls (Continued)
Normal Operation 5-15
Preventive Maintenance 5-15
Shutdown 5-15
Startup 5-15
Variable Speed ..... 5-12 thru 5-14
Dynamic ..... 1-1, 3-1 thru 3-12
Alignment Maintenance ..... 3-10, 3-11 (F), 3-12 (F)
Axial Flow ..... 3-1, 3-3 (F)
Bearings Maintenance 3-11
Centrifugal ..... 3-1, 3-2 (F)
Cold Climate Shutdown 3-7
Long-Term Shutdown 3-6
Lubrication Maintenance 3-9
Preventive Maintenance 3-7
Short-Term Shutdown 3-5
Startup .....
Maximum Capacity ..... 1-1, 1-3 (T)
Maximum Pressures ..... 1-1, 1-3 (T)
Positive Displacement ..... 1-1, 1-3, 2-1 thru 2-26
Liquid Piston, Rotary 2-20
Reciprocating ..... 2-1, 2-2 (F), 5-1, 5-7
Sliding Vane, Rotary 2-13
Twin-Lobe, Rotary 2-19
Controls, Prime Mover ..... 5-l thru 5-16
Cooling Water Treatment 1-4

E

Engineering Responsibilities 1-5

H

High-Pressure Compressed Air Systems 2-1

I

Intercoolers and Aftercoolers ..... 4-7 thru 4-12
Cleaning Maintenance 4-11
Preventive Maintenance 4-9
Shutdown 4-9
Startup 4-8
Tubes Maintenance 4-11

L

Leaks, Compressed Air B-1

*(T) = Table (F) = Figure

M

Maintenance Responsibilities 1-5

O

Operator Responsibilities 1-5

P

Plant, Air Compressor (See Air Compressor Plant)
Prime Mover Controls ..... 1-1, 1-3, 1-4, 5-1 thru 5-16
  Control System 5-5
  Cleaning Maintenance 5-5
  Lubrication Maintenance 5-5
  Motor 5-1
  Normal Operation 5-4
  Preventive Maintenance 5-4
  Reciprocating Engine 5-4
  Shutdown 5-4
  Startup 5-4
  Steam Engine 5-1
  Steam Turbine 5-2

R

Reciprocating Compressor ..... 1-1, 2-1 thru 2-12
  Bearings Maintenance 2-10
  Belt Drives Maintenance 2-10
  Cleaning Maintenance 2-8
  Extended Shutdown 2-5
  High Pressure 2-1
  Lubrication Maintenance 2-8
  Motor Driven Startup 2-4
  New/Overhauled Startup 2-4
  Normal Operation 2-5
  Packing Maintenance 2-8
  Piston Rings Maintenance 2-9
  Preventive Maintenance 2-6, 2-7
  Safety Precautions 2-1
  Shutdown 2-5
  Startup 2-3
  Steam-Driven Startup .....
Rotary Liquid Piston ..... 1-1, 2-23, 2-24 (F), 2-25 (F), 5-12
  Bearings Maintenance 2-26
  Lubrication Maintenance 2-26
  Normal Operation 2-23
  Packing Maintenance 2-26
  Preventive Maintenance 2-25, 2-26
  Shutdown 2-23
  Startup 2-23

*(T) = Table (F) = Figure

Rotary Sliding Vane . . . . . 1-1, 2-13 thru 2-18, 2-14 (F), 5-12, 5-13 (F)
Bearings Maintenance 2-18
Clearances Maintenance 2-18
Cylinders Maintenance 2-17
Extended Shutdown 2-15
Lubrication Maintenance 2-18
Normal Operation 2-15
Preventive Maintenance 2-16, 2-17
Rotor Blades Maintenance 2-17
Shutdown 2-15
Startup 2-13
Rotary Twin-Lobe . . . . . 1-1, 2-19 thru 2-22, 2-20 (F), 5-12
Bearings Maintenance 2-22
Lubrication Maintenance 2-22
Normal Operation 2-21
Preventive Maintenance 2-21
Seals Maintenance 2-22
Shutdown 2-21
Startup 2-19
Timing Gears Maintenance 2-22

S

Safety Procedures, High-Pressure Systems 2-1
Separators 4-13, 4-14
Maintenance 4-14
Operation 4-13
Preventive Maintenance 4-13
Silencers 4-5, 4-6
Inspection and Maintenance 4-5
Supervisory Responsibilities 1-5

T

Traps . . . . . 4-15 thru 4-17
Buckets and Floats Maintenance 4-17
Cleaning Maintenance 4-15
Levers Maintenance 4-17
Preventive Maintenance 4-15
Shutdown 4-15
Startup 4-15
Valves Maintenance 4-17
Troubleshooting . . . . . 1-B (T) thru 1-12 (T)

*(T) = Table (F) = Figure