NAVFAC MO-340
JULY 1980

APPROVED FOR PUBLIC RELEASE

SHIP-TO-SHORE HOSE HANDLING OPERATIONS MANUAL

FILE NO.					
ACTION/COG					
NFO COPY	096	110	11		

DEPARTMENT OF THE NAVY
NAVAL FACILITIES ENGINEERING COMMAND

200 STOVALL STREET
ALEXANDRIA, VA. 22332

Distribution: (Two copies each unless otherwise indicated)

FA7	Except KEFLAVIK, ICELAND
FB10	Except Philippines
FF3	
FKP7	
FA18	
FB21	
FB7	NAS N. Island, San Diego, CA, NAS Alameda, CA, NAS Whitbey Island, Oak Harbor, WA only
FT6	NAS Pensacola only
FA6	NAS Key West, FL only
FKM9	NSC San Diego, CA NSC Puget Sound, WA only
FKA6A12	
FB15	
FA13	
FKA9	
FB13	
FA10	
FKP1B	
FKN2	NCBC Port Hueneme only
FF19	NSA New Orleans, NSA Seattle only
FKA6A9	
FKA6A3B	
FRl0	(N&MCRC Portland, OR; N&MCRC Portland, ME; N&MCRC Tacoma, WA; NAVRESCEN, Everett, WA; NAVRESCEN, Brooklyn, NY; NAVRESCEN, Baltimore, MD; N&MCRC Brooklyn, NY; NRC Tampa, FL; NRC Seattle, WA only)
FKA6A3A	
FT28	
FKR4A	
FKM3	
FKR4B	
FKP1J	(Naval Ordnance Station, Indian Hd, MD only)
FRl	
FF38	
A4A	(MAT-044 only) 5 copies
A3	(OP-45 only) 3 copies
A5	(5532 only)
A6	(LFF2 only)
FKA1G	(04E only) 5 copies
FKN1	(except Bethesda) 15 each

Additional copies may be obtained from:

Naval Publications and Forms Center
5801 Tabor Avenue
Philadelphia, Pa. 19120

ABSTRACT

This manual provides a detailed guide for ship-to-shore sewage transfer operations. Chapters 1 through 3 present introductory material and describe the various shipboard systems, shore collection methods, sewage transfer equipment, and hose support facilities. Chapters 4 through 10 contain detailed information about operating procedures for handling the sewage hoses and making the ship-to-shore and ship-to-ship connections/disconnections. The special requirements of submarines and the remedial actions to take in case of sewage spills are also discussed. Chapters 11 and 12 and Appendices A and B provide general guidelines for hose maintenance procedures, safety aspects of handling hoses, and hose disinfection procedures.

FOREWORD

This is the first revision of the Naval Facilities Engineering Command's Ship-To-Shore Hose Handling Operations Manual, NAVFAC MO-340. These procedures were developed and performed during a comprehensive field test and evaluation program. As such, this manual contains the most current information available on connecting, disconnecting, handling, cleaning, and storing sewage transfer hoses. The recommended procedures have been coordinated with the Bureau of Medicine and Surgery, and are consistent with the Bureau's health and safety requirements.

The manual is a general guide for all shore activity personnel responsible for handling sewage transfer hoses. The manual cannot address every situation likely to be encountered at each activity. It can be assumed that some discretion and judgment will be required to adapt the procedures to meet local requirements. Assistance in solving local sewage hose handling problems can be obtained from the respective Naval Facilities Engineering Command Engineering Field Division and from the local Preventive Medicine Unit. Comments on the recommended procedures are solicited. Recommendations for improving this manual should be addressed, via the appropriate command chain, to the Commander, Naval Facilities Engineering Command (Code 1123B), 200 Stovall Street, Alexandria, VA 22332. This publication is certified as an official Command publication in accordance with SECNAVINST 5600.16. The November 1977 edition of NAVFAC MO-340 is hereby cancelled and superseded.

D.G. ISELIN
Rear Admiral, CEC, U.S. Navy
Commander
Naval Facilities Engineering Command

CONTENTS

		Page
CHAPTER 1.	INTRODUCTION l	1-1
CHAPTER 2.	BACKGROUND	2-1
Section 1.	Introduction	2-1
Sect ion 2.	Shipboard Systems	2-2
Section 3.	Shore Collection System	2-9
Sect ion 4.	Ship Waste Offload Barges	2-13
CHAPTER 3.	SEWAGE TRANSFER EQUIPMENT	3-1
Sect ion 1.	Sewage Transfer Hoses	3-1
Section 2.	Equipment Specifications	3-2
Section 3.	Hose Support Facilities	3-19
CHAPTER 4.	HOSE LOADING	4-1
Section 1.	Manual Loading	4-1
Section 2.	Hose Reel Trailer	4-3
CHAPTER 5.	HOSE TRANSPORT	5-1
Section 1.	Vehicles	5-1
Section 2.	Other Equipment	5-3
CHAPTER 6.	SHIP-TO-SHORE CONNECTION	6-1
Section 1.	Hose Deployment	6-1
Section 2.	Surface Vessels	6-2
Section 3.	Submarines	6-6
CHAPTER 7.	SHIP-TO-SHIP CONNECTION	7-1
Sect ion 1.	Hose Deployment	7-1
Sect ion 2.	Surface Vessels	7-4
Sect ion 3.	Submarines	7-9
Section 4.	Ship Waste Offload Barge, Sewage	7-12

CONTENTS (Continued)

CHAPTER 8. SHIP-TO-SHORE DISCONNECTION 8-1

Section 1. Disconnection Procedures 8-1
Section 2. Sewage Spills 8-5

CHAPTER 9. SHIP-TO-SHIP DISCONNECTION 9-1

CHAPTER 10. UNLOADING HOSES FOR STORAGE 10-1

Section 1. Unloading Hoses 10-1
Section 2. Storage 10-3

CHAPTER 11. HOSE MAINTENANCE/REPAIR 11-1

Section 1. Condition of Hoses 11-1
Section 2. Hose Repair 11-3

CHAPTER 12. SAFETY ASPECTS OF HOSE HANDLING 12-1

CHAPTER 13. COLD WEATHER CLIMATES 13-1

Appendix A Sewage Transfer Hose Disinfection Procedures . . . A-1
Appendix B Lessons Learned, Experiences, and Testing B-1
Appendix C Mandrel - Straightening Hose Fittings C-1

References . . . . . Reference 1

Index . . . . . Index 1

FIGURES

Figure	Title	Page
2-1	Comminutor Type CHT System (Tank Larger than 2,000 Gallons)	2-4
2-2	Strainer Type CHT System (Tank Less than 2,000 Gallons)	2-5

FIGURES (Continued)

Figure	Title	Page
2-3	Pressure Manifold Concept	2-10
2-4	Pressure Manifold Pier Piping and Ship Berthing Arrangement	2-11
2-5	Pier Sewer Riser	2-12
3-1	Surface Ship Sewage Discharge Connection	3-3
3-2	Surface Ship Sewage Discharge Connection with Air Blowdown Fitting	3-4
3-3	Pier Sewer Riser (Typical)	3-5
3-4	Surface Ship Sewage Discharge Hose Assembly	3-6
3-5	4-inch, Female/Female Cam-lock Adapter	3-10
3-6	4-inch or 2 l/2-inch, Female/Male Cam-lock 90-Degree Elbow	3-10
3-7	4-inch, Male Cam-lock to 2 l/2-inch, Threaded Reducer Adapter	3-12
3-8	IMCO Sewage Discharge Flanges	3-12
3-9	4-inch Female Cam-lock to IMCO Flange Adapter	3-13
3-1o	4-inch Male Cam-lock to IMCO Flange Adapter	3-14
3-11	Submarine Discharge Fittings, Adapters, and Hoses	3-15
3-12	Service Craft/Small Boat Sewage Discharge Connections, Adapters, and Hoses	3-17
3-13	1 l/4-inch, Threaded Male to 1 l/2-inch, Threaded Female Coupling Flushing Adapter	3-18
3-14	Hose Washing Rack	3-20
3-15	Washing Rack Inlet and Outlet Manifold	3-21
3-16	Hose Washing Apron	3-21
3-17	Hose Storage on the Ground	3-23
3-18	Hose Storage Racks/Aprons	3-24
3-19	Storage Rack - Coiled Rubber Hoses	3-25
4-1	Powered Hose Reel	4-4
4-2	Hose Loading	4-5
6-1	Ship-to-Shore Sewage Transfer Hose Connections	6-3
7-1	Ship-to-Ship Connections	7-2
7-2	Hose Connections for Nested Ships	7-3
7-3	Use of Tire Rim Saddles for Sewage Hose Support Surface Vessels	7-7
7-4	Nested Submarines Direct Connections to Pier Sewer - Hose Configuration	7-9
7-5	Submarines Nested Against Tender - Hose Configuration	7-10
11-1	Hose Repair Procedures	11-4
11-2	Work Bench Arranged for Cutting Hoses	11-6

FIGURES (Continued)

Figure	Title	Page
A-1	Sewage Hose Disinfection Procedures	A-2
C-1	Mandrel - Straightening Hose Fittings	C-1

TABLES

2-1	Ship Sewage Discharge Rates	2-6
3-1	Ship-to-Shore Sewage Transfer Equipment	3-7
3-2	Ship-to-Shore Sewage/Oil/Flush Water Transfer Couplings/Adapters/Hoses	3-8

CHAPTER 1. INTRODUCTION

1.1 PURPOSE. This manual is a detailed guide for routine ship-to-shore sewage transfer operations. It is intended for both supervisory and subordinate field personnel who perform the hose handling operations. Because of the nature of the waste involved, it is imperative that the recommended procedures be implemented to ensure a safe operation.

The manual can be divided into three categories: 1) Chapters 1 through 3 provide introductory material and describe the various ship-to-shore sewage facilities in considerable detail. 2) Chapters 4 through 10 contain detailed operating procedures for handling the sewage hoses and making the ship-to-shore connections. 3) Chapters 11 and 12 and Appendices A and B provide general guidance on hose maintenance procedures, safety aspects of handling hoses, hose disinfection procedures, and lessons learned during the development of the manual.

It is the intent of this Command to publish the best procedures available for managing the ship-to-shore operation. As such, field activities are encouraged to submit comments and/or revised operating procedures. These recommendations will be periodically consolidated and used to update this manual.

1.2 LEGAL REQUIREMENTS. DOD Directive 6050.4 of 23 October 1979 promulgates Section 312 of the Federal Water Pollution Control Act, as amended, and is consistent with U.S. Coast Guard and Environmental Protection Agency implementing regulations, 33 CFR 159 and 40 CFR 140 respectively. Specifically, the DOD directive requires that nonexempted Navy ships be outfitted with equipment to preclude the overboard discharge of raw sewage in restricted waters. Existing vessels shall be in compliance by April 1, 1981, or when an approved Marine Sanitation Device (MSD) is installed in the existing vessel, whichever is sooner. New vessels shall be in compliance on the effective date of the above directive.

1.3 DEVELOPMENT OF PROCEDURES. The procedures discussed in this manual were developed as part of an extensive study program conducted at NAVSTA, San Diego. They have been reviewed by various fleet and shore commands, and pertinent comments were incorporated into the manuscript. Finally, these procedures are consistent with the health and safety requirements specified by the Chief, Bureau of Medicine and Surgery.

1.4 HOSE DISINFECTION. Appendix A contains procedures for disinfecting the interior and exterior surfaces of hoses. It must be emphasized that hose disinfection is not required by the Bureau of Medicine and Surgery for safe hose handling operations. As such, the decision on whether to routinely disinfect sewage hoses is left to the discretion of the individual activities.

CHAPTER 2. BACKGROUND

Section 1. INTRODUCTION

2.1.1 SHIP-TO-SHORE SYSTEM. To comply with the public law and DOD directive, the Navy initiated a program for collecting sewage on board ships, and for periodically transferring the wastes to shore facilities for treatment and disposal. Shipboard systems to collect, hold, and transfer (CHT) sewage are being installed currently on most large Navy ships. Smaller ships, such as service craft and some new construction combatants, are being outfitted with marine sanitation devices (MSDs). These systems reduce the volume of sewage generated by using reduced flush, recirculating flush, evaporation, or incineration processes. The reduced sewage generation rate minimizes the size of the collection tanks required on these vessels.

Concurrently with the shipboard installations, shore facilities for receiving the ships' waste are being constructed at most ship berthing areas. The facilities will be designed to transfer the ships' waste to existing sewerage systems. Fifty-foot lengths of 4-inch hose will be used for the interface connection between the ship and the shore facility.

20102 OPERATING SCENARIO. Once operational, shipboard CHT or MSD systems will be activated as the ship enters the 3-mile restricted zone. While transiting the 3-mile zone, wastes should be collected from the soil drains only. After the ship has been berthed, shore personnel will deploy sewage hoses to connect the ship discharge point to the shore reception facility. Once the ship has been connected, the waste water drains should be diverted to the holding tank and the system placed in the automatic pumping mode. The above procedure is reversed when a ship is scheduled to deploy to sea. These operations should be carried on with minimum time and effort, minimum interference with and from other pier activities, and without physical or health hazard to ships' crews and station personnel. Normally, sewage transfer hoses will be supplied by the receiving facility and will be cleaned and stored in accordance with pertinent Bureau of Medicine (BUMED) instructions as discussed in Chapter 10, Section 1-1 in this manual.

2.1.3 SPECIAL OPERATING SCENARIOS. In addition to the above, two special operating scenarios have been identified.

a. Ships Berthed in a Nested Configuration. Most ships that routinely nest are being outfitted with an athwartship "pump-thru" capability. As a result, outboard ships in a nest will be connected to the inboard ship and will pump their sewage through the inboard ship(s) to the pier facility. Generally, the ship's crew will be responsible for making the hose connections in nested situations.

b. Ships at Anchor and Ships Berthed at Piers without Sewage Collection Facilities. For these situations the ships' waste will be collected with ship waste offload barges (SWOBs), which have been specially designed to handle sewage. The collected waste subsequently will be transferred from the barge to the shore sewerage system.

2.2.1 CHT SYSTEMS. As previously stated, these systems are being installed on most of the Navy's large combatant ships.

a. Three Distinct Modes of Operation Accommodated by CHT Systems.

(1) Soil and Waste Transfer to Pier Sewer System. While a ship is in port, soil and waste drainage is collected in the CHT tank and transferred/discharged by pumping from the tank to a pier sewer system.

(2) Waste Diverted Overboard. When a ship is transiting restricted waters, the ship's sewage is collected from the soil drain and held in the holding tanks. In this holding mode of operation, waste drainage usually can be diverted overboard by gravity.

(3) Soil and Waste Diverted Overboard. When the ship is outside restricted waters, both soil and waste drainage are diverted overboard by gravity.

b. Two Basic Types of CHT Systems.

(1) Comminutor. In this type of system, a comminutor has been incorporated into the inflow drain lines of the holding tanks. This system is used for tanks with greater than 2,000 gallons capacity (see Figure 2-l).

(2) Overflow Box and Inflow Strainers. This system is used for tanks with capacities smaller than 2,000 gallons (see Figure 2-2).

co Sewage Storage Tanks. Depending upon the size and class of the vessel, CHT systems will include one or more sewage storage tanks. Generally, the CHT tanks are sized to hold up to 12 hours of sewage flow, based upon a normal ship complement. However, due to space constraints, many ships do not meet this design objective. When a ship is in port, sewage and waste water are collected in the ship's CHT tank(s), after comminution or screening. Each CHT tank is provided with two automatically controlled sewage pumps which transfer sewage ashore under pressure. Water level sensors within CHT tanks control pumping cycles to minimize detention. A high water level alarm which registers at a continuously manned remote location is also installed in each holding tank.

CHT sewage holding tanks are equipped with a diffused air supply to inhibit sewage septicity and to help keep solids in suspension. In addition, each tank is provided with an internal salt water washdown system to permit cleaning after each period of use. About 100 gallons per minute (gal/rein) of salt water is obtained under pressure from the ship's fire system. The fire system is also connected to the sewage discharge force main near the outlet of the sewage pumps to allow salt water flushing of the system's pumps and piping after use. This feature is also called upon for salt water flushing of sewage hoses, as will be explained in Chapter 3, Section 2.

2.2.2 SEWAGE TRANSPORT PUMPS AND DISCHARGE SYSTEMS. CHT pumps are electric-motor-driven, non-clog marine sewage pumps, connected in parallel. Rated capacities per pump and ship *sewage* discharge rates are shown in Table 2-1.

Generally, one pump will have sufficient capacity to transfer the sewage flow arriving at the CHT tank it serves, with the other pump acting as standby. However, in case of high flows, both pumps will operate to increase the rate of sewage discharge. For example, ships arriving from sea duty, with sewage in holding tanks over the 60% level, will have both pumps running during the first transfer operation. Flow rates of about 150% of the single pump flow rate should be expected during these operations.

Waste water pumped from CHT holding tanks flows under pressure to discharge risers which are fitted with full port ball or plug valves, and the male portion of a cam-lock, quick connect/disconnect hose coupling. The discharge risers, in most cases, are conveniently located on both sides of the ship on the weather deck. Sewage pressure pipes run athwart the ship to interconnect the risers. Thus, most vessels are equipped to discharge sewage from port or starboard, depending upon which is alongside of the pier. This piping arrangement also permits nested surface ships to connect their sewage risers together by hoses so that sewage may be pumped from outboard ships through the piping systems of inboard ships to the pier sewer. Since several interconnected ships can pump at the same time, rates of sewage flow coming ashore from nested ships may at times exceed flow rates from single large vessels.

2.2.3 MSD's. Combatant ships and service craft outfitted with MSD's will operate in a manner similar to the CHT arrangement discussed above. By definition, an MSD is any equipment for installation on board a vessel that is designed to receive, retain, treat, and discharge sewage. Existing systems rely on a reduced flush process to minimize the volume of liquid to be handled, and on a liquid incinerator to reduce the concentrated sewage to a sterile ash. Other types of systems store the concentrated waste volumes, and periodically transfer them to shore for disposal. The following wastewater/waste management systems are in service currently on board U.S. Navy vessels:

a. Collection, Holding and Transfer. This system provides no treatment. CHT is a method of collecting and holding wastewater until it can be transferred to a suitable facility for treatment in port or discharged overboard at sea.

b. Sewage Discharge Connection. This is a topside fitting aboard submarines designed to connect holding tank discharge to a shore collection facility.

c. Drydock Industrial Wastewater Alterations. This is a physical treatment system designed to remove suspended solids from wastewater generated during drydock operations. Settling tanks are utilized for removing sediment, and a filtration system is used for removing suspended solids. The water is discharged overboard or to a pier collection facility.

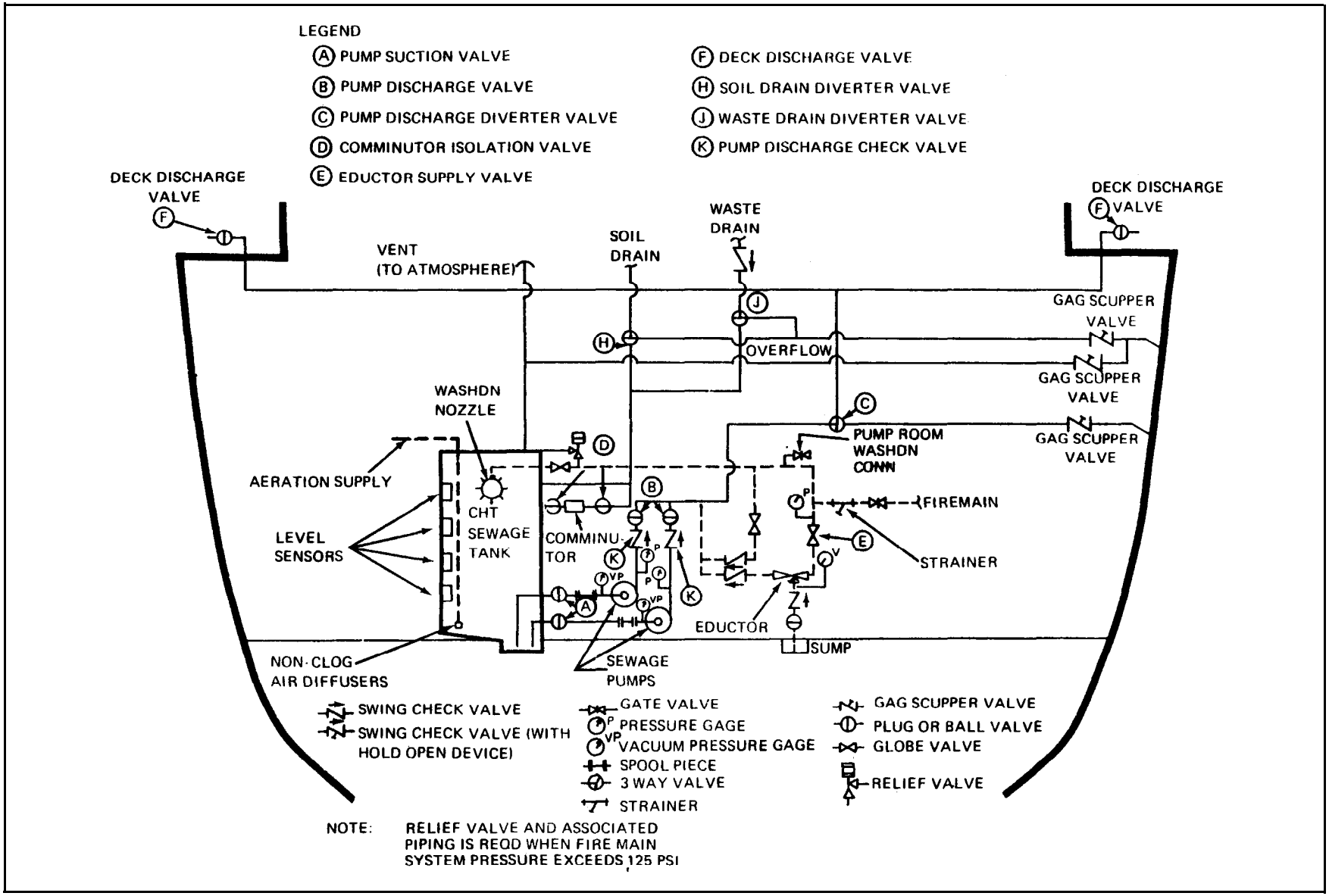

FIGURE 2-1
Comminutor Type CHT System (Tank Larger than 2,000 Gallons)

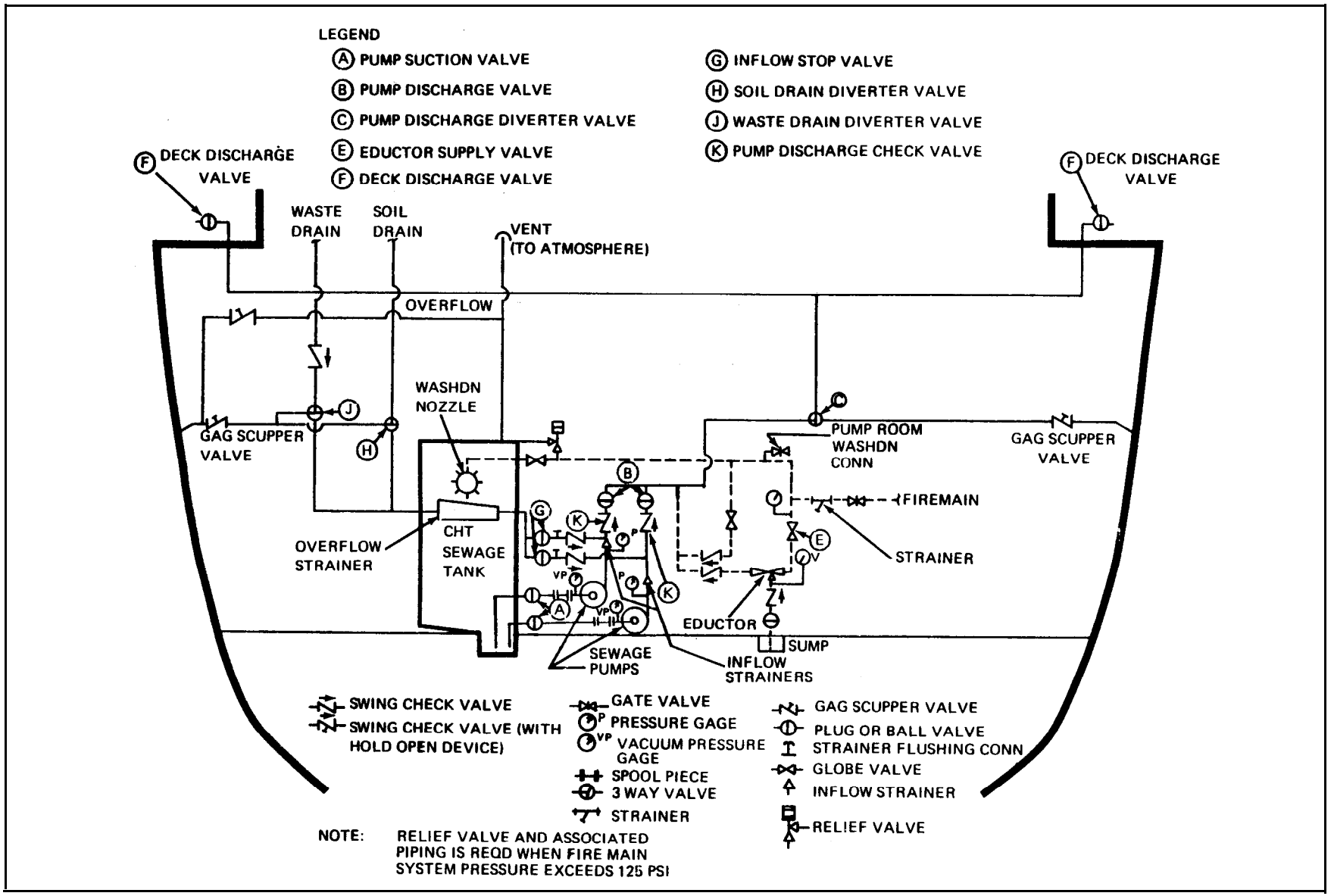

FIGURE 2-2
Strainer Type CHT System (Tank Less than 2,000 Gallons)

TABLE 2-1
Ship Sewage Discharge Rates

Ship type[1]	Complement	Average 24 hour flow (at 60 gped)		Max disch capacity of 1 pump (gpm)	No. of pumping stations	No. of disch connections per side	Design disch gpm from each disch connection[3]	Design total discharges[3] from ship, gpm	
		GPD	GPM[2]					To gravity sewer	To pressure manifold
AD	1800	108,360	75	225	4	1	265	265	265
AE	349	20,940	15	330	1	1	330	330	330
AF	350	21,000	15	300	1	1	300	300	300
AFS	486	29,160	20	320	1	1	320	320	320
AG	428	25,680	20	325	1	1	325	325	325
AKL	40	2,400	5	405	1	1	405	405	405
AO	317	19,020	15	386	2	2	386	772	490
AR	133	7,980	5	360	2	2	360	720	450
ARS	120	7,200	5	330	1	1	330	330	330
AS	1348	80,880	60	225	4	1	265	265	265
ASR	200	12,000	10	340	1	1	340	340	340
CG[4]	1207	72,420	50	600	12	4	700	2800	800
Destroyer	300	18,000	15	380	2	2	380	760	400
Carrier	3000	180,000	125	290	8	4	355	1420	410
Carrier	4500	270,000	190	290	8	4	355	1420	410
LKA	642	38,520	30	515	1	1	550	550	550
LPD	1487	89,200	65	430	3	1	635	635	635
LPH	2723	163,380	115	415	3	2	430	995	448
LSD	756	45,360	35	530	2	1	570	570	570
LST	617	37,020	25	360	2	2	360	720	440
SS[5]	100	6,000	5	...	....	1 or 2	50 (normal) 200 (max)	200	200
SWOB[6]	--	--	--	320	1	1	320	320	320

1 See list of equivalent ships (paragraph 2b(3) above), established by NAVSHIPSYSCOM for shore collection of ship sewage.
2 To nearest or next highest 5 gpm.
3 The above data is generated under the assumption that there is one pump at each pumping station pumping.
4 CG-10 and 11 only. All other cruisers are destroyer type. See list of equivalent ships (paragraph 2b(3)).
5 Ejects with compressed air, manually.
6 Ship Waste Offload Barge (SWOB) outfitted for sewage use - capacity of four tanks on the barge is 75,000 gal.

d. Jered Vacu-Burn Sewage Disposal System. Sanitary wastes from reduced-flush water urinals and water closets are collected and transferred by vacuum to a storage tank. Waste is then either incinerated on board or transferred to a suitable facility for treatment in port.

e. GATX Mark I. This is an evaporative treatment system for medium-sized vessels. It utilizes fixtures that use a low volume of salt water for flushing. After each flush, a macerator/transfer pump is activated to transfer the waste to an evaporator tank. When the evaporator tank reaches a set level, heat is applied to evaporate some of the liquid. When 65 gallons of sludge is accumulated, it is discharged. On an average, the sludge pump-out rate is 260 man-days, which is every 13 days for a twenty-man crew.

f. GATX Mark II. This is a collection system for small vessels which utilizes a reduced-flush water closet and a holding tank. After each flush, a macerator/transfer pump is activated, which transfers the waste and 1 to 3 pints of flush water to a 60-gallcn holding tank. When the holding tank accumulates approximately 48 gallons, the tank is emptied via a sewage transport pump, either overboard at sea or to a pier facility in port.

g. Kohler-Dayton Commodore. This is an electrically or manually flushed, chemical recirculating toilet capable of holding 16 gallons of waste. Initially, 4 gallons of flushing fluid and a measure of chemical agent are added to the holding tank. During operation, the wastewater is screened and used as a flushing fluid. After approximately 160 uses, the waste contained in the holding compartment is discharged to a suitable facility.

h. Monogram Model 641 Recirculating Toilet. This is a manually flushed, chemical recirculating toilet capable of holding 4 gallons of waste and 3 gallons of flushing fluids. After approximately 80 uses, the holding compartment is discharged to a pierside connection facility for treatment.

i. Portable Chemical Marine Toilet. This is a manually flushed, self-contained toilet which usually discharges into an attached holding tank. Chemicals in the toilet tank deodorize the waste. When the tank is full, either the tank or both toilet and tank are carried from the vessel and emptied.

j. Mansfield 912-M28 Marine Toilet. This device is a manually flushed marine toilet mounted on an 8 l/4-gallon holding tank. The toilet requires an external nonpressurized water supply. The holding tank is designed to hold an average of 6 gallons of flush fluid, plus 2 gallons of waste. When the tank is full, its contents are pumped to a shore collection facility.

k. Secondary, Biological Treatment System. This system is a thermally accelerated, extended aeration system designed to treat sanitary waste from commodes and urinals at an influent flowrate of 9,000 gallons per day. The effluent is chlorinated and discharged overboard, or discharged to a shore collection facility.

2.2.4 SHIP CERTIFICATION PROGRAM. As, part of the MSD installation program, the Naval Sea Systems Command has initiated a concurrent inspection and certification program. The purpose of this effort is to verify that MSD systems have been installed in accordance with approved drawings, that system components are functioning properly, that the overall system is operational, and that the ship's crew is properly indoctrinated. The program was initiated in 1975 and is expected to continue until all MSD installations are completed and certified. The fleet has been directed by CNO to activate their MSD systems following certification, provided the facilities are available.

Section 3. SHORE COLLECTION SYSTEM

2.3.1 PIER SEWERS. Installation of sewage collection systems is underway on most piers and quay walls where CHT equipped ships berth routinely. The system consists of a pier sewer line, pier risers with quick disconnect couplings for making ship-to-shore connections, and a pump station for discharging the waste into the shore activity sewerage system.

2.3.2 GRAVITY COLLECTION SYSTEMS. Some of the first pier sewer collection systems constructed were designed for gravity flow. This resulted in rather large collection lines to accommodate the flow rates from the ships' pumps. These large gravity lines proved unsatisfactory because:

a. In many cases, it was difficult, if not impossible, to install the large lines under the piers.

b. The investment costs were high because of the installation and procurement costs for the larger pipes.

In addition to the above, an operational problem with the gravity systems has been noted. The high flow rate from the ships' pumps has caused the sewage transfer hose to pulsate. This condition has caused the hose to chafe on the edges of the pier and, on some occasions, has led to failure of the hose. This phenomenon will be discussed in detail in Chapter 8, Section 2.5.

2.3.3 PARTIAL PRESSURE COLLECTION SYSTEM. In order to limit the excessive peak flow rates and control the size of the pipelines, a "partial pressure" system has been developed. The system consists of a gravity sewer main down the center of the pier and pressure manifolds centered on each berth (see Figure 2-3). The standard pressure manifolds consist of 4-inch pipe headers running parallel to the pier face with a single 4-inch connection to the gravity sewer. Four single or double receiving connections are provided at 150-foot intervals along the length of the manifold. Each manifold is designed to receive sewage from one ship or from a nest of ships at a particular berth (see Figure 2-4). The small-diameter pressure pipe serves to throttle the ship's pumps, thereby reducing the flow rate to the gravity sewer.

2.3.4 PIER SEWER CONNECTION FACILITIES. Two types of connection facilities are provided with the collection system.

a. Connections above the Pier Deck. For this type of facility, exposed receiving hose connections are installed approximately 18 inches to 2 feet above the pier deck. The connections are located inside the pier curbing and are protected against damage by a concrete or pipe rail enclosure. Concrete barriers form a box, and the outer wall of the box serves as the pier curb. A drainage grate is provided within the box in case of spills. Figure 2-5 illustrates a pier sewage riser protected by a pipe rail barrier.

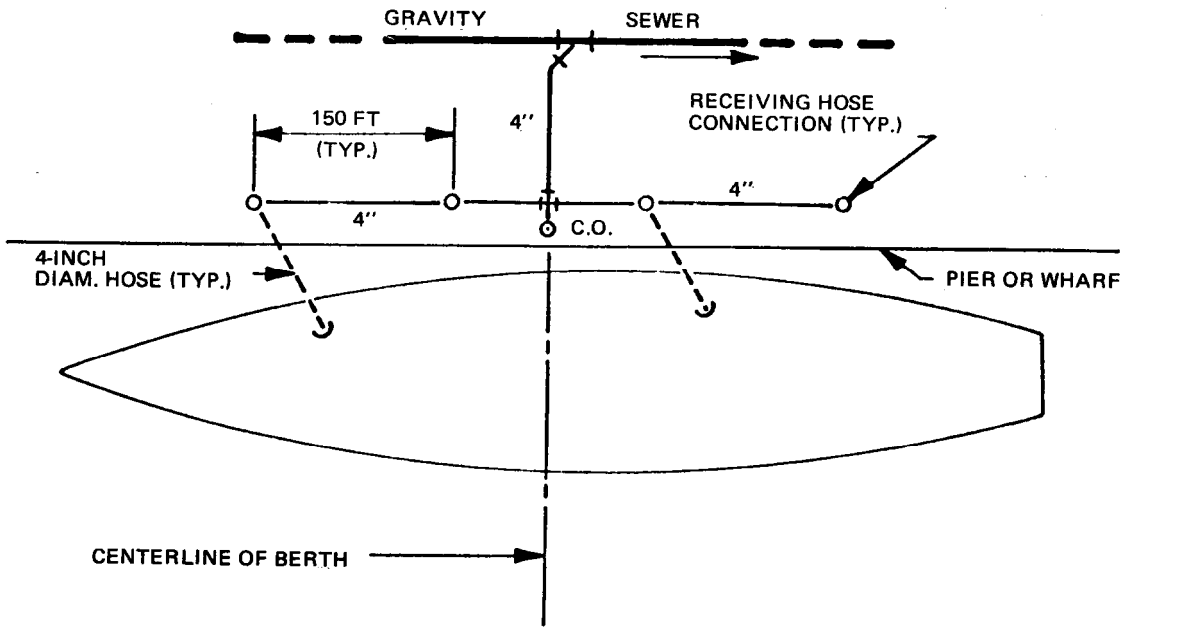

PLAN

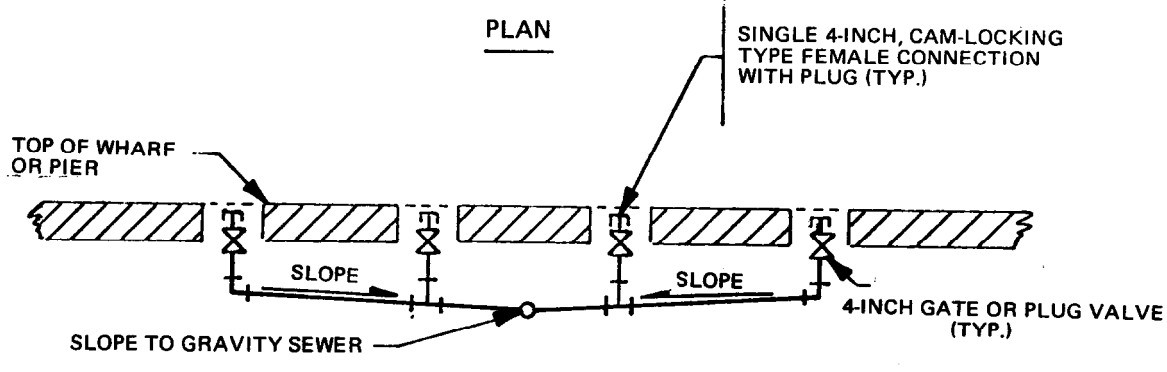

SECTION

NOTES:

1. ABOVE DECK RECEIVING HOSE CONNECTIONS MAY BE USED IN LIEU OF RECESSED CONNECTIONS SHOWN WITH STATION APPROVAL.

2. DESIGN RECEIVING HOSE CONNECTIONS FOR 3,000 LB PULL IN ANY DIRECTION.

FIGURE 2-3
Pressure Manifold Concept

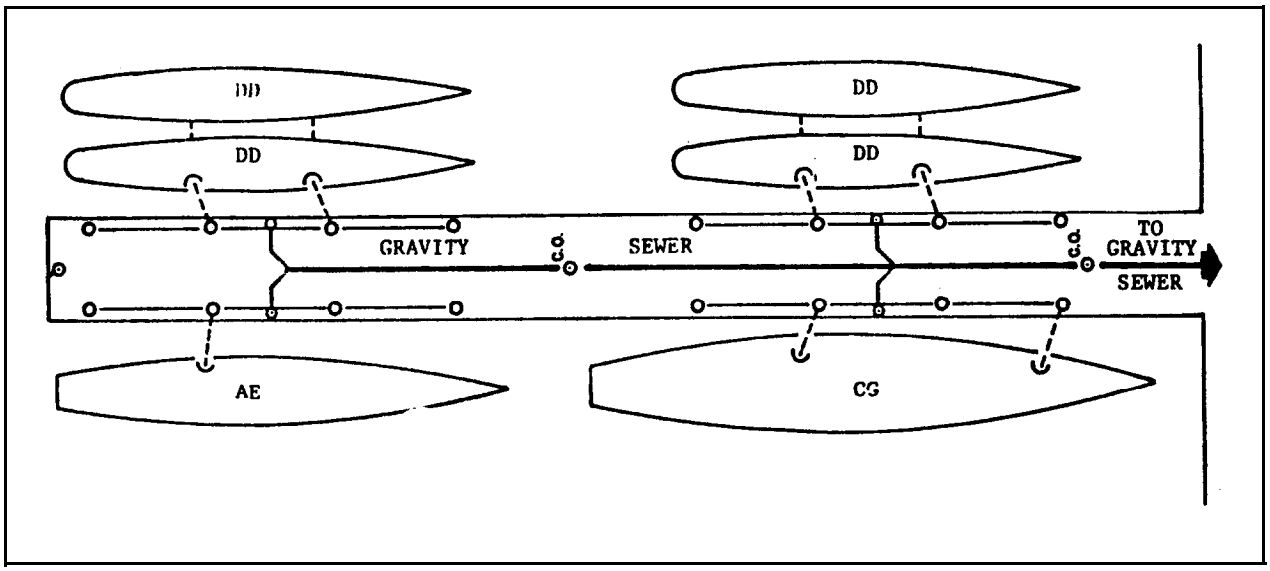

FIGURE 2-4
Pressure Manifold Pier Piping and Ship Berthing Arrangement

b. Connections Flush with Pier Surface. For this type of connection facility, recessed hose connections usually are located flush with the surface of the pier, in which case the opening is covered by means of a grate or steel plate. Openings for recessed receiving connections penetrate completely through the pier deck, allowing adequate provision for drainage.

2.3.5 CERTIFICATION TESTING OF PIER SEWER COLLECTION SYSTEM. Prior to activating a new pier collection system, a thorough test shall be conducted. The system, including gravity lines, pressure manifolds, riser connections, wet wells, and transfer pumps, should be activated with an appropriate fresh or salt water flow prior to hooking up ships and pumping sewage. Based on the test results, the system shall be certified for use by the responsible shore activity. Further, to insure the operational integrity of the pier sewage collection system, any unusual or potentially hazardous circumstances shall be noted and provided for in standard operational procedures.

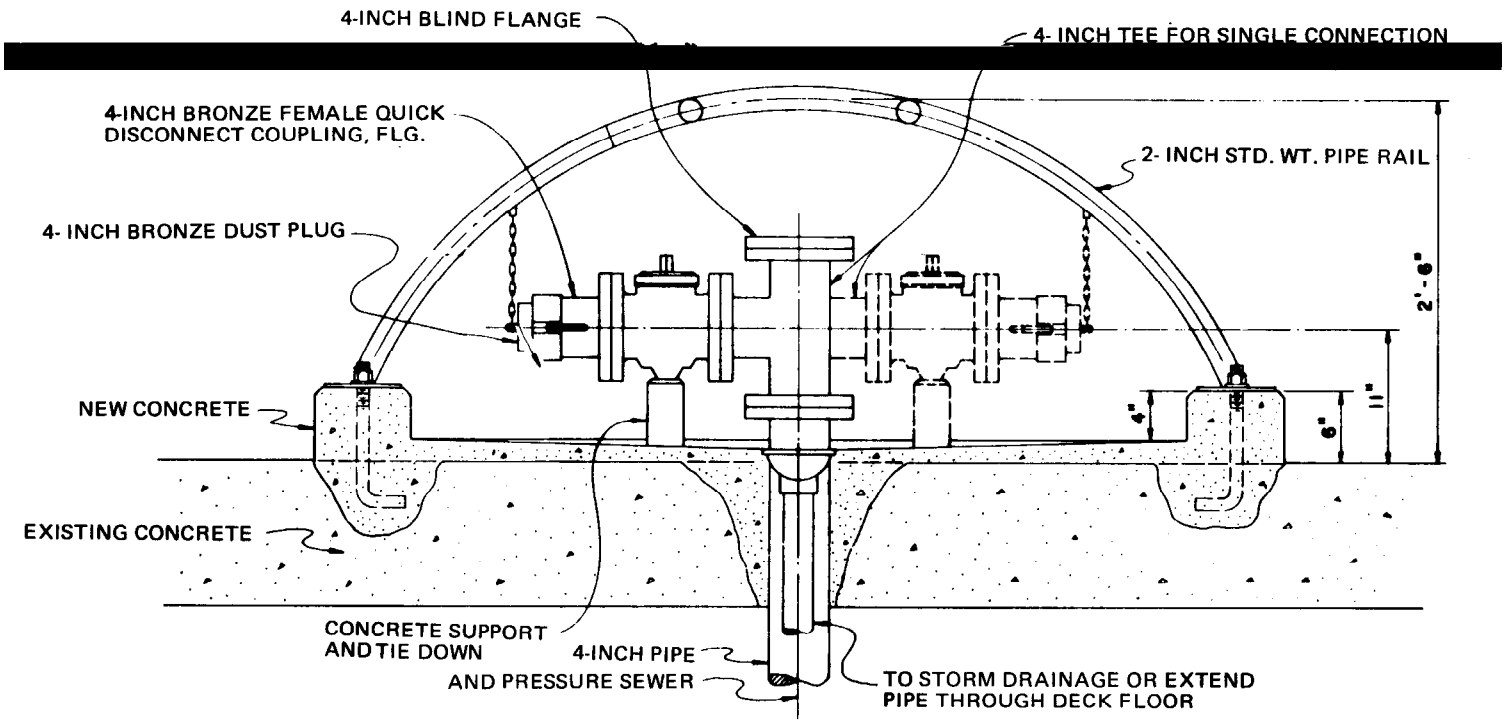

FIGURE 2-5
Pier Sewer Riser

Section 4. SHIP WASTE OFFLOAD BARGES

2.4.1 USE OF SHIP WASTE OFFLOAD (SWOB) BARGES. SWOB barges are provided to collect sewage from ships at anchor, or from ships berthed in areas not served by pier sewers. The barges are 106 feet long, 26 feet wide, and have a full load draft of 6 feet. The capacity of the barge is 75,000 gallons.

a. SWOB Storage Tanks and Pumps. The storage tanks on the barge are essentially identical to the shipboard CHT tanks. They have been outfitted with special coatings, level indicators, and washdown systems. Further, aerations systems have been installed to prevent the sewage from becoming septic. Two marine centrifugal pumps will be provided for offloading the barge. Each pump has a capacity of 160 gal/rein with a 40-foot total discharge head.

b. SWOB Hose Connection. Hose connection procedures for the barge will be similar to those for pier connections, and are discussed in Chapter 7, Section 4 of this manual. Actual operating procedures for the barge will be covered in the operations manual delivered with the barge. NAVFACENGCOM is developing a standard operating manual to be issued in 1980 for the sewage SWOB's .

IT IS IMPERATIVE THAT ONLY BARGES OUTFITTED WITH THE SPECIAL EQUIPMENT DISCUSSED ABOVE BE USED FOR SEWAGE COLLECTION. USE OF STANDARD OIL BARGES FOR THIS PURPOSE WOULD LEAD TO POTENTIALLY DANGEROUS CONDITIONS.

CHAPTER 3. SEWAGE TRANSFER EQUIPMENT

Section 1. SEWAGE TRANSFER HOSES

3.1.1 CHT HOSE PROCUREMENT PROGRAM. The Naval Facilities Engineering Command (NAVFACENGCOM) has been assigned the responsibility for central procurement of hoses used in transferring ship-generated sewage to shore collection systems during the initial outfitting phase. Upon completion of this phase, replacement hoses will be procured using normal supply system procedures. A proposed hose distribution plan was developed based on ship home porting guidelines, CHT installation schedules, and pier sewer construction programs.

The Civil Engineering Support Office, Naval Construction Battalion Center, Port Hueneme, California 93043 has been designated as the hose procurement agent for NAVFAC. The contact point for information concerning quantity of hoses and delivery schedule is CESO Code 15323, Autovon 360-3368.

3.1.2 HOSE TYPES. Sewage hose procured in 1976 and 1977 was lightweight and collapsible, and consisted of a synthetic rubber inner tube with multiple fabric wrapping and a neoprene cover. Unfortunately, the flexibility of the collapsible hose caused it to kink at sharp bends and turns when it was not deployed properly, hampering the flow of waste liquid from ship to shore. As sewage flowed by gravity through the kinked hose, severe pulsations occurred. In an effort to alleviate the kinking problem, a new specification was developed for a rubber-based, smooth bore sewage transfer hose that would be noncollapsible and lightweight. This hose was developed for use in procurements during FY 78 and FY 79. It was decided that all future procurements will be of this type.

3.1.3 APPLICATIONS. The noncollapsible sewage hoses should be used in conjunction with the collapsible hoses. Collapsible hoses should be used for straight runs where they can be supported. Noncollapsible hoses should be used in unsupported areas and on tortuous paths.

Section 2. EQUIPMENT SPECIFICATIONS

3.2.1 GENERAL. Surface ships, submarines, and service craft/boats are being fitted with cam-lock discharge connections in 4-inch, 2 l/2-inch, and 1 1/2-inch sizes, respectively, for discharging sewage. Navy shoreside reception facilities use 2 l/2-inch and 4-inch cam-lock connections for oily wastes and sewage, respectively. Two types of hoses, collapsible and noncollapsible, were procured for each of the three sizes of discharge connections. They are furnished in standard 50-foot lengths, with male and female couplings attached. One dust plug and one cap are provided with each hose length.

Because the hoses and connections differ in size and configuration from those required by IMCO, U.S. Navy vessels and shore facilities must be equipped with English-to-metric adapters to provide maximum flexibility for ships/craft that tie up at Navy, commercial, and foreign ports. Specific requirements for the various discharge connections, fittings, adapters, and hoses are described in more detail below. For quick reference, sewage equipment is summarized in Table 3-1. Table 3-2 is a MIL SPEC reference table providing military standard numbers for the various hoses, fittings, and adapters.

3.2.2 SURFACE SHIP CONNECTIONS. U.S. Navy surface ships which have sewage CHT systems installed will be provided with 4-inch cam-lock, quick connect/disconnect discharge connections. Figure 3-1 depicts a typical surface ship sewage discharge connection (refer to NAVSEA Drawing No. 810-4444650). Eventually, this sewage discharge connection will be modified by adding a low-pressure air fitting between the shutoff valve and the cam-lock fitting; this will allow thorough emptying of the sewage hose into the pier sewerage system prior to disconnection. A preliminary illustration of this modified connection is provided in Figure 3-2. The low-pressure air fitting is a standard fitting with a stop-check valve and a quick connect/disconnect which attaches to a standard air hose.

a. Hoses for Surface Ships. The shoreside receiving riser is illustrated in Figure 3-3. Usually, discharge to shoreside reception facilities will be accomplished with the use of 4-inch hoses. Collapsible and noncollapsible 4-inch sewage hoses with male and female cam-lock couplings will be used. The collapsible hose was procured in accordance with MIL-H-20176A, B, and C. The noncollapsible hose was procured in accordance with MIL-H-20176D. A typical surface ship sewage discharge hose assembly is illustrated in Figure 3-4.

b. Additional Transfer Equipment. Certain sewage discharge operations may require additional transfer equipment, depending on the physical location of the ship and its associated sewage reception facility. Recommended fittings for these varied situations are discussed below. All of these items are portable, and it is recommended that they be stored at shore facilities or on applicable tenders.

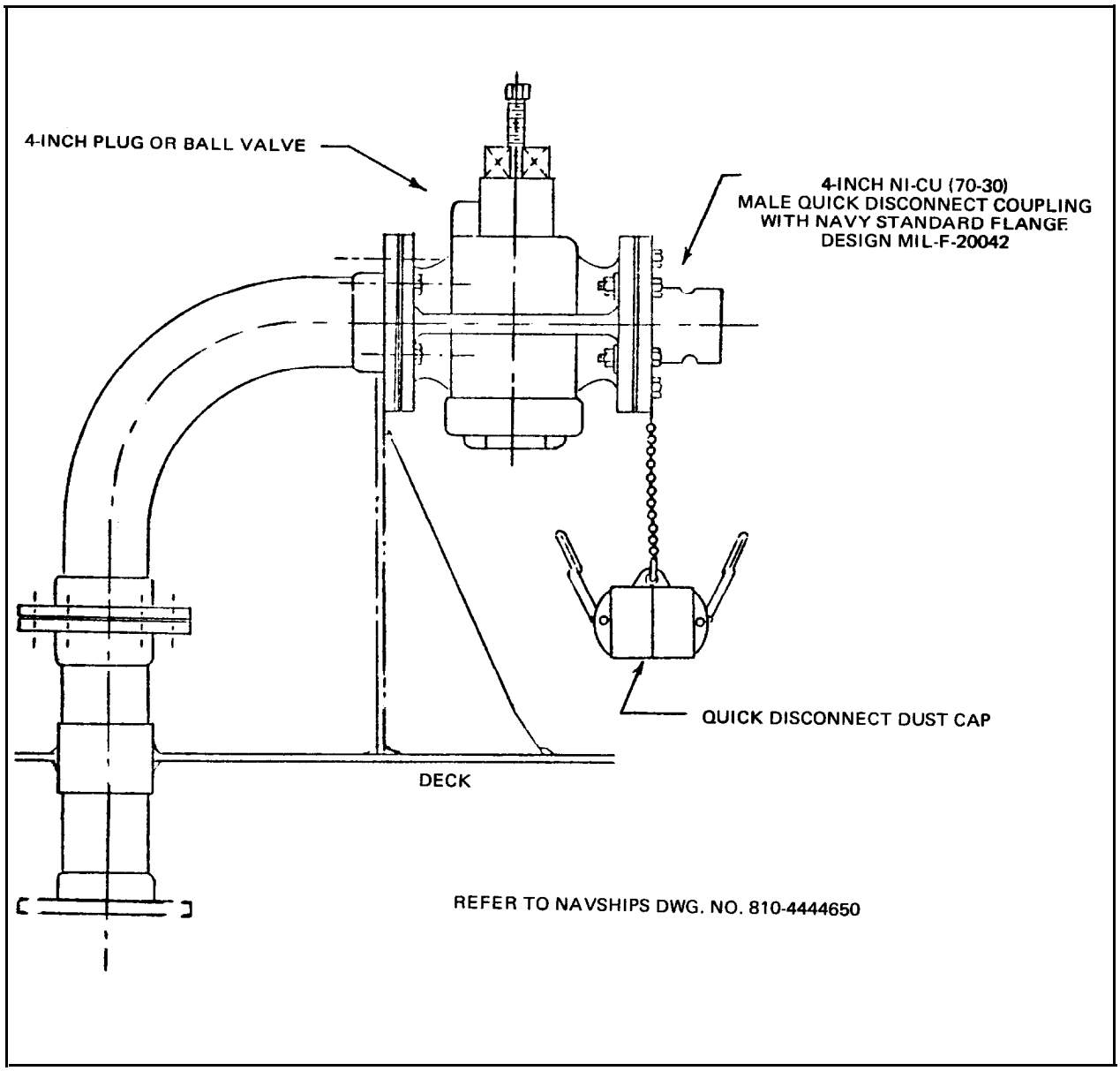

FIGURE 3-1
Surface Ship Sewage Discharge Connection

C. Special Ship-to-Ship Connections. In nested ship configurations, ship-to-ship connections require hoses with either female fittings at both ends or with female/female adapters fitted to ship riser discharge connections. Extra hose couplings are supplied with each sewage hose delivery so that some hoses can be made up with female couplings at both ends. In addition, because distances between ships in a nested configuration are normally short, there may be a need to make up hoses in less than the standard 50-foot length. The standard hose with male and female couplings at opposite ends can be used in ship-to-ship connections. When the standard hose is used, a special female/female cam-lock adapter is required for the inboard ship. The 4-inch cam-lock, quick connect/disconnect fitting is recommended (see Figure 3-5).

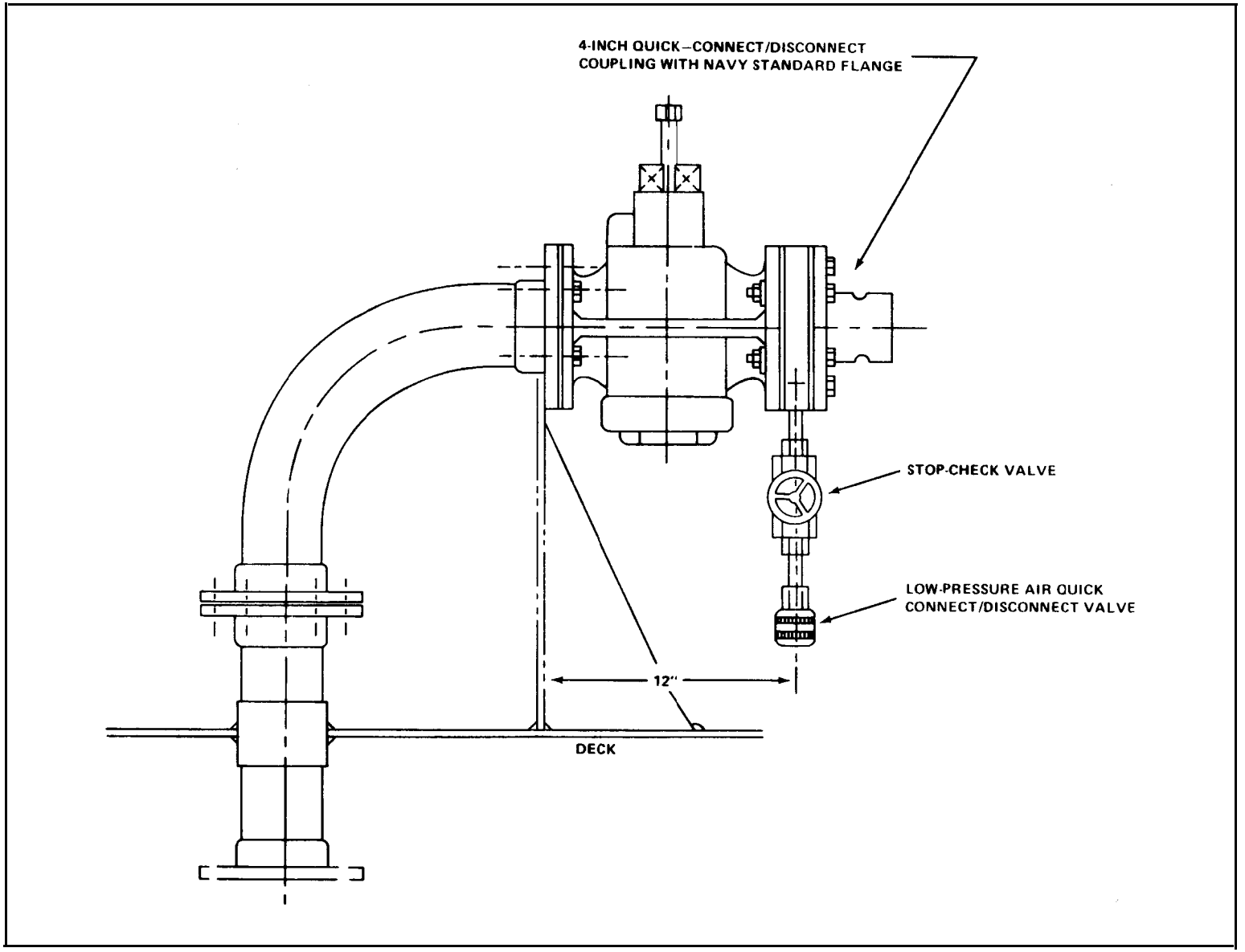

FIGURE 3-2
Surface Ship Sewage Discharge Connection with Air Blowdown Fitting

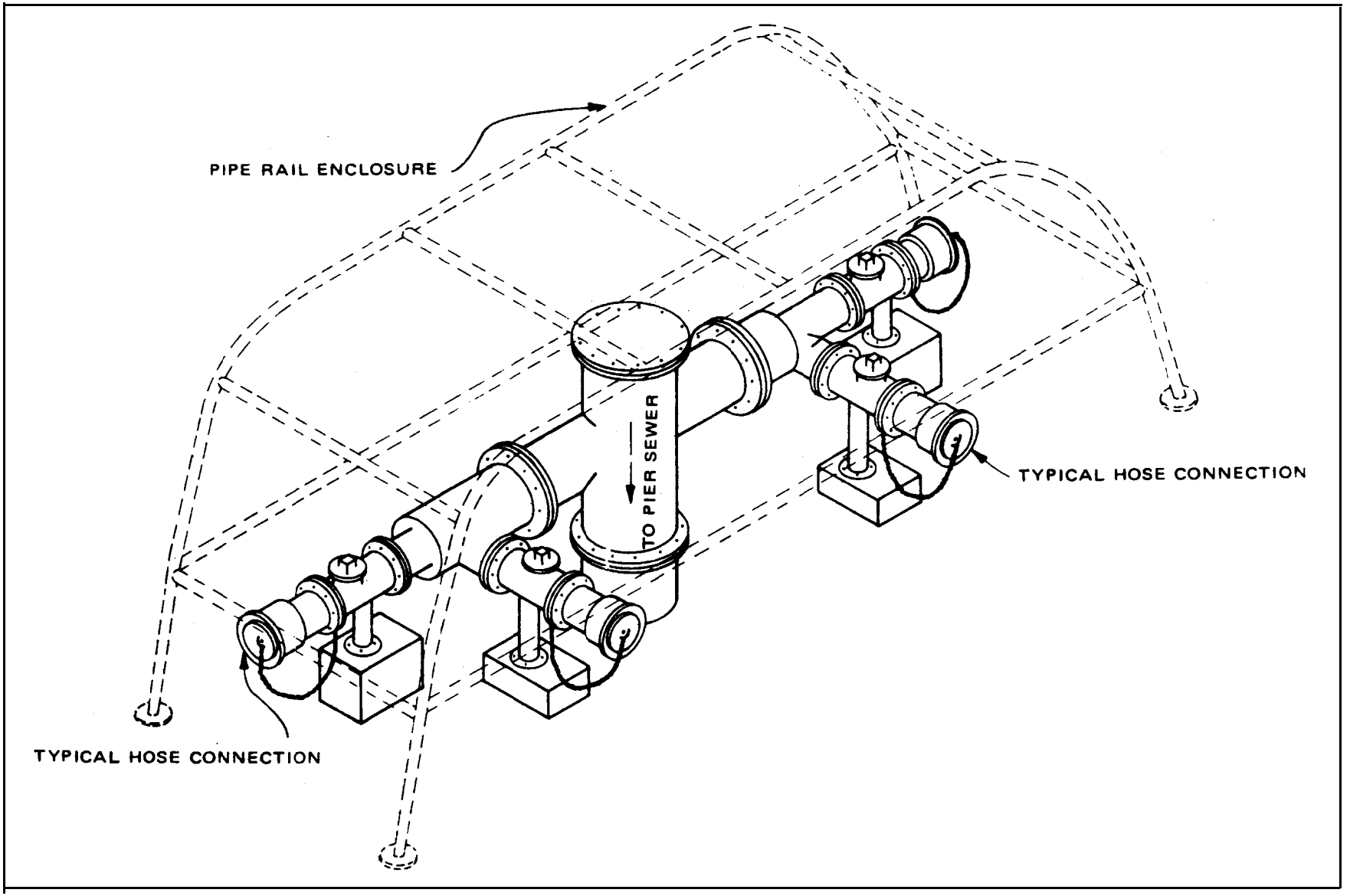

FIGURE 3-3
Pier Sewer Riser (Typical)

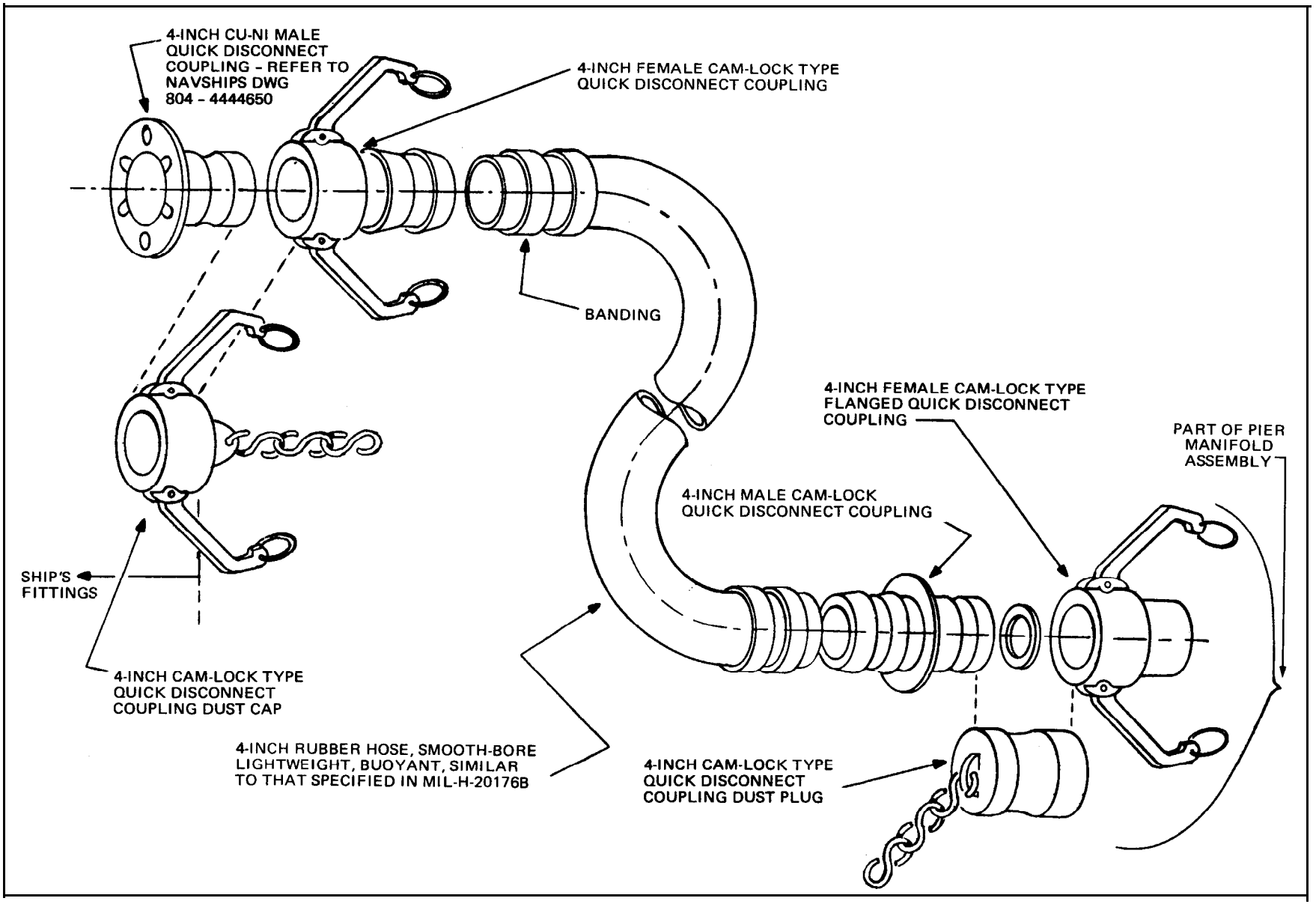

FIGURE 3-4

Surface Ship Sewage Discharge Hose Assembly

TABLE 3-1

Ship-to-Shore Sewage Transfer Equipment

Vessel	Hose	Shipside Requirements: Riser Connection	Shipside Requirements: Adapter	Shipside Requirements: Hose Coupling	Shoreside Requirements: Hose Coupling	Shoreside Requirements: Adapter	Shoreside Requirements: Riser Connection	IMCO U.S. Navy Ships	IMCO Foreign Ships	Special Adapters
Surface Ships	4-inch	4-inch male cam-lock with std. Navy flange (MS 27023-18)	Not Required	4-inch female cam-lock coupling (MS 27025-18)	4-inch male cam-lock coupling (MS 27021-18)	Not Required	4-inch female coupling with std. Navy flange (MS 27027-18)	4-inch female cam-lock-to-IMCO flange	4-inch male cam-lock-to-IMCO flange	4-inch F/F cam-lock adapter (Nested Ships) 4-inch 90-deg elbow 4-inch cam-lock male to 2 1/2-inch male firehose thd. adapter (Flushing)
Submarines	2 1/2-inch	Standard Dry-dock Fitting	2 1/2-inch cam-lock to 2 1/2-inch male firehose thd. with 1 1/2-inch thd. male end with stop valve or 2 1/2-inch male cam-lock to 2 1/2-inch male firehose thd. (MS 27022-14)	2 1/2-inch female cam-lock coupling (MS 27025-14)	2 1/2-inch male cam-lock coupling (MS 27021-14)	2 1/2-inch female cam-lock to 4-inch male cam-lock reducer	4-inch female coupling with std. Navy flange (MS 27027-18)	Not Required	Not Required	2 1/2-inch cam-lock 90-deg elbow
Service Craft/Boats	1 1/2-inch	Threaded female 1 1/2-inch deck connection	1 1/2-inch male thd. to 1 1/2-inch male cam-lock adapter (MS 27022-10)	1 1/2-inch female cam-lock coupling (MS 27025-10)	1 1/2-inch male cam-lock coupling (MS 27021-10)	1 1/2-inch female cam-lock to 4-inch male cam-lock reducer	4-inch female coupling with std. Navy flange (MS 27027-18)	Not Required	Not Required	1 1/2-inch thd. male to 1 1/2-inch fire-hose thd. female coupling (Flushing)

TABLE 3-2
Ship-to-Shore Sewage/Oil/Flush Water Transfer
Couplings/Adapters/Hoses

Description	MS Number	MIL SPEC	NSN
4-inch collapsible hose, 50-ft. lengths		MIL-H-20176 A, B, C Type I (Sewage)	
4-inch noncollapsible hose, 50-ft. lengths		MIL-H-20176D Type I (Sewage)	
2 1/2-inch collapsible hose, 50-ft. lengths		MIL-H-20176 A, B, C Types I and II	
2 1/2-inch noncollapsible hose, 50 ft.		MIL-H-20176D Types I and II	
1 1/2-inch noncollapsible hose, 50 ft.		MIL-H-20176D Type I	
4-inch cam-lock female coupling	MS 27025-18	MIL-C-27487	4730-01-010-9057
4-inch cam-lock male coupling	MS 27021-18	MIL-C-27487	
4-inch cam-lock dust cap	MS 27028-18	MIL-C-27487	4730-00-6237537
4-inch cam-lock dust plug	MS 27029-19	MIL-C-27487	
2 1/2-inch cam-lock female coupling	MS 27025-14	MIL-C-27487	
2 1/2-inch cam-lock male coupling	MS 27021-14	MIL-C-27487	
2 1/2-inch cam-lock dust cap	MS 27028-14	MIL-C-27487	4730-00-590-8083
2 1/2-inch cam-lock dust plug	MS 27029-14	MIL-C-27487	
2 1/2-inch reducer 2 1/2-inch cam-lock to 4-inch cam-lock male		MIL-C-27487	
1 1/2-inch cam-lock female coupling	MS 27025-10	MIL-C-27487	4730-00-950-9646
1 1/2-inch cam-lock male coupling	MS 27021-10	MIL-C-27487	4730-00-949-8291
1 1/2-inch dust cap	MS 27028-10	MIL-C-27487	4730-00-936-4584
1 1/2-inch dust plug	MS 27029-10	MIL-C-27487	
1 1/2-inch reducer - 1 1/2-inch cam-lock female to 4-inch cam-lock male		MIL-C-27487	
2 1/2-inch cam-lock male to 2 1/2-inch male fire hose threaded	MS 27022-14	MIL-C-27487	
1 1/2-inch cam-lock male to 1 1/2-inch male threaded	MS 27022-10	MIL-C-27487	9C-4730-00-958-7117

TABLE 3-2 (continued)
Ship-to-Shore Sewage/Oil/Flush Water Transfer
Couplings/Adapters/Hoses

Description	MS Number	MIL SPEC	NSN
4-inch cam-lock female to IMCO flange adapter			
2 1/2-inch cam-lock female to IMCO flange adapter			
4-inch cam-lock male to IMCO flange adapter			
2 1/2-inch cam-lock male to IMCO flange adapter			
4-inch cam-lock male to 2 l/2-inch fire hose threaded male adapter			
2 1/2-inch 900 elbow cam-lock (female/male) adapter			
4-inch 900 elbow cam-lock (female/male) adapter			
"T" flushing adapter 2 1/2-inch cam-lock male to 2 1/2-inch fire hose threaded (male) with 1 1/2-inch threaded male (flushing) with stop valve			
Deck flush connection 1 l/4-inch threaded to 1 1/2-inch hose threaded			
4-inch cam-lock male coupling with standard Navy flange	MS 27023-18	MIL-C-27487	4730-01-030-4365
2 l/2-inch cam-lock male coupling with standard Navy flange	MS 27023-14	MIL-C-27487	4730-00-602-3160
4-inch cam-lock female coupling with standard Navy flange	MS 27027-18	MIL-C-27487	
2 l/2-inch cam-lock female coupling with standard Navy flange	MS 27027-14	MIL-C-27487	

d. Use of the 90-degree Elbow. On some ships, because of the location of the discharge risers, the sewage hoses must make bends or changes in direction in order to reach the pier riser. To prevent kinks in the hose, a special 90-degree elbow can be use in making these changes in direction. The 90-degree elbow, illustrated in Figure 3-6, is a 4-inch cam-lock, quick connect/disconnect, right angle, female/male adapter. If a 180-degree change in direction is needed, two 90-degree elbows can be connected together.

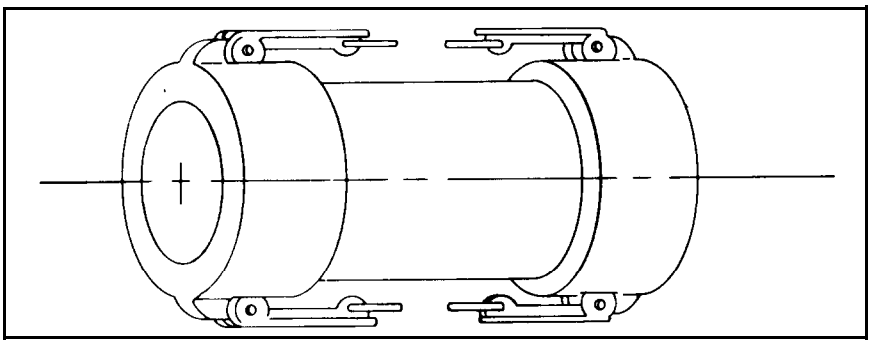

FIGURE 3-5
4-inch, Female/Female Cam-lock Adapter

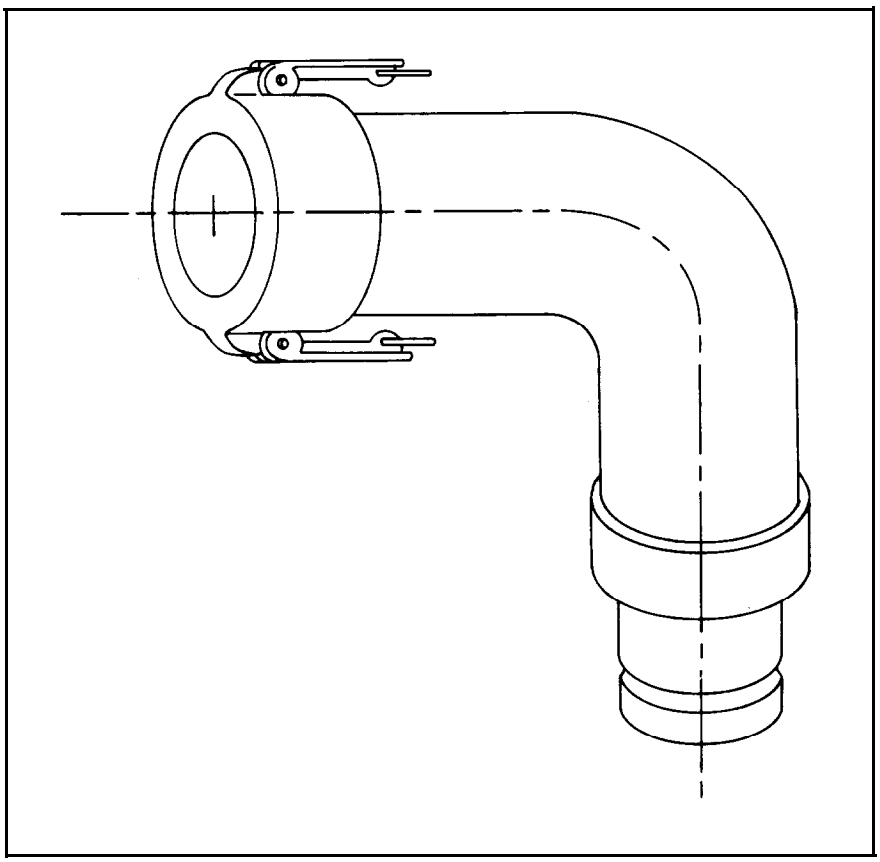

FIGURE 3-6
4-inch or 2 l/2-inch, Female/Male Cam-lock 90-Degree Elbow

e. Flushing Pipes and Hoses. After a ship has completed its transfer of sewage to the shore or tender, it is necessary to flush the hose with water. In most cases, water from the ship's fire main is used to flush CHT discharge piping, the discharge deck riser, and the hoses. When a ship does not have the capability of flushing its discharge line and transfer hose with water, the shore facility or tender should recover the hose, connect it to the nearest seawater outlet, and flush the hose clean. The shore facility and some of the tenders will be provided with a special adapter for connecting 4-inch hoses to 2 l/2-inch fire main systems. This adapter, the 4-inch, male cam-lock to 2 l/2-inch, male, fire hose thread-reducer adapter, is pictured in Figure 3-7.

f. IMCO Flange and Adapter. The standard IMCO sewage discharge connection is a flanged metric fitting. The flange, including detailed dimensions, is illustrated in Figure 3-8. The IMCO flange is not compatible with the Navy standard flange used on surface ship discharge connections. Consequently, in order to enable Navy surface ships to interface with nonNavy facilities utilizing IMCO flange-equipped hoses, a special Navy-to-IMCO adapter is required. The female cam-lock to IMCO flange fitting is illustrated in Figure 3-9. Also, a male cam-lock to IMCO flange fitting is required at Navy facilities so that foreign vessels can discharge sewage while visiting U.S. Navy ports. The 4-inch, male cam-lock to IMCO flange adapter is illustrated in Figure 3-10.

3.2.3 SUBMARINES. All U.S. Navy submarines are being retrofitted with topside, above-the-waterline sewage connections so that sanitary tanks can be ' discharged to shoreside reception facilities.

a. Submarine Connections. A standard drydock fitting is being used with a 2 l/2-inch, female fire hose thread as 'illustrated in Figure 3-11. Discharge to shoreside reception facilities is accomplished by using 2 l/2-inch, cam-lock, quick connect/disconnect sewage hose.

b. Flushing Pipes and Hoses. Some submarines have the capability of flushing their sewage pipes and discharge hoses before disconnecting; others do not. Therefore, it is necessary to have two types of adapters available for connecting sewage hoses to the standard drydock fittings. Submarines that have the capability of flushing sewage hoses will require a 2 l/2-inch, male fire hose thread to a 2 l/2-inch, male cam-lock adapter. This adapter can also be used by the shore facilities and some tenders to connect 2 l/2-inch sewage hose to the fire-fighting systems for the purpose of flushing sewage hose. Submarines that do not have flushing capabilities will require a special "T" adapter that can be connected to a 1 1/2-inch fire hose. This adapter has a 2 l/2-inch threaded male end which connects into the drydock fitting; a 2 l/2-inch, male cam-lock, quick connect/ disconnect end which attaches to the sewage hose; and a 1 1/2-inch, threaded, male end with a stop valve which connects to a 1 l/2-inch fire hose. The adapter permits flushing of the sewage hose with water prior to disconnecting. An additional adapter (2 l/2-inch, female cam-lock to 4-inch, male cam-lock) is required to mate the sewage hose to the pier sewage line. The submarine discharge fittings, adapters, and hoses are illustrated in Figure 3-11.

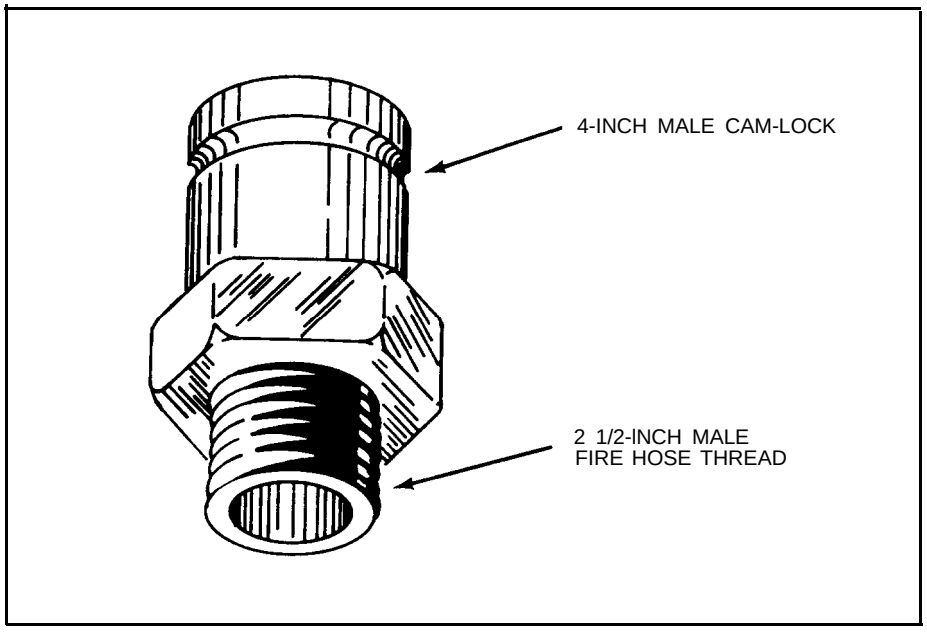

FIGURE 3-7
4-inch, Male Cam-lock to 2 l/2-inch, Threaded Reducer Adapter

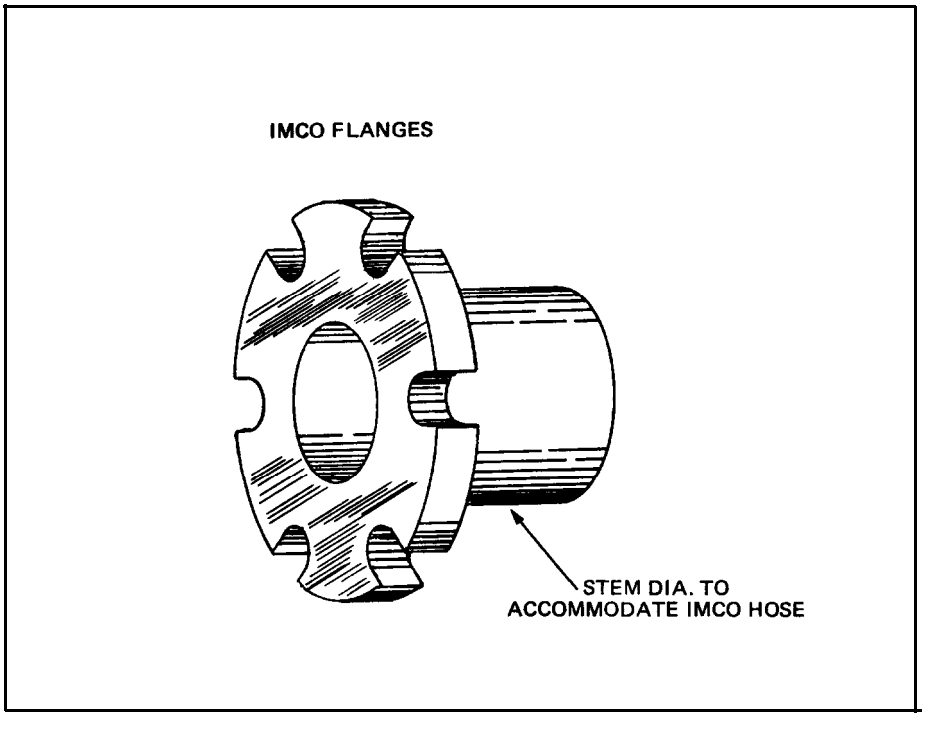

FIGURE 3-8
IMCO Sewage Discharge Flanges

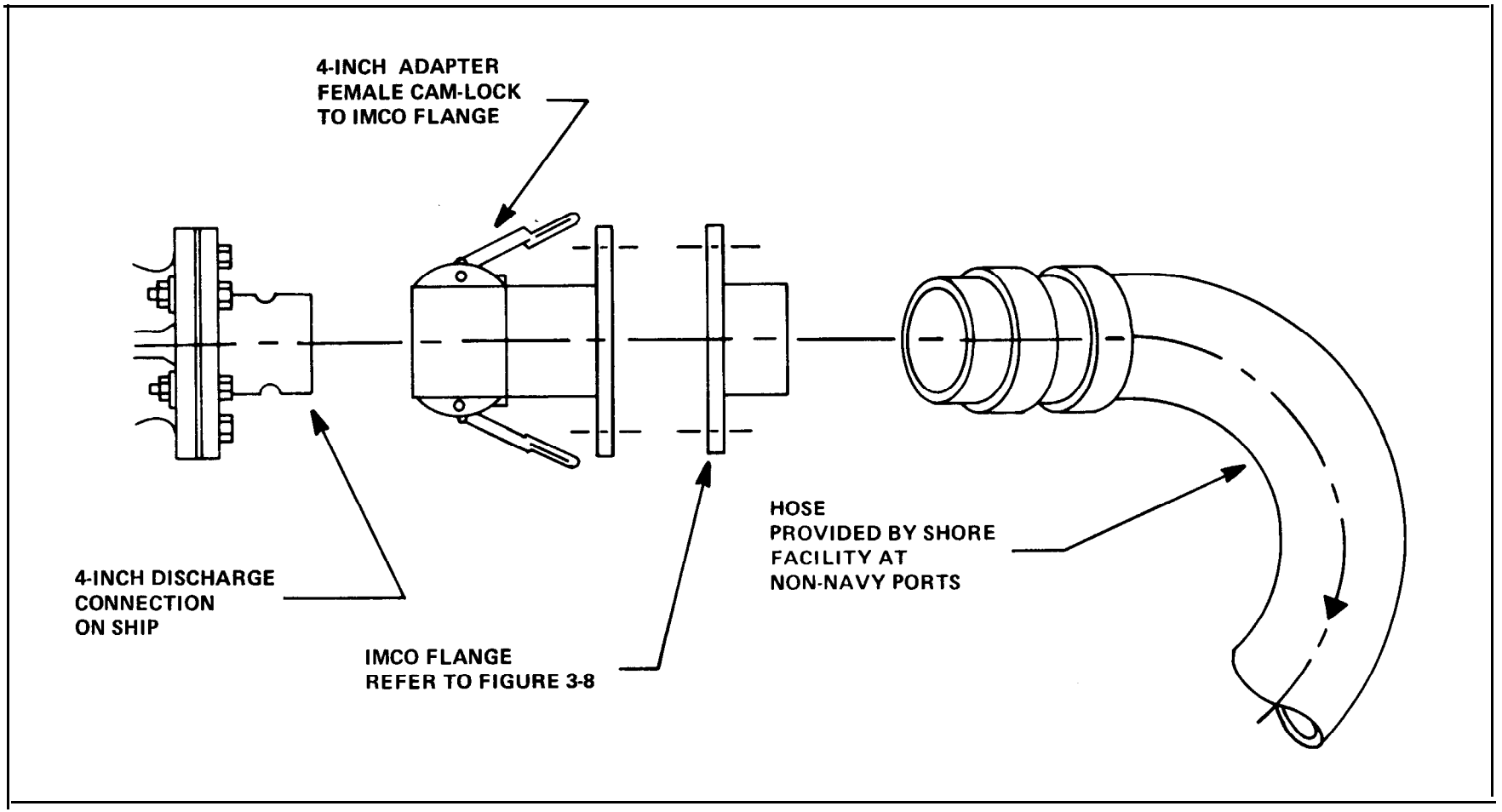

FIGURE 3-9

4-inch Female Cam-lock to IMCO Flange Adapter

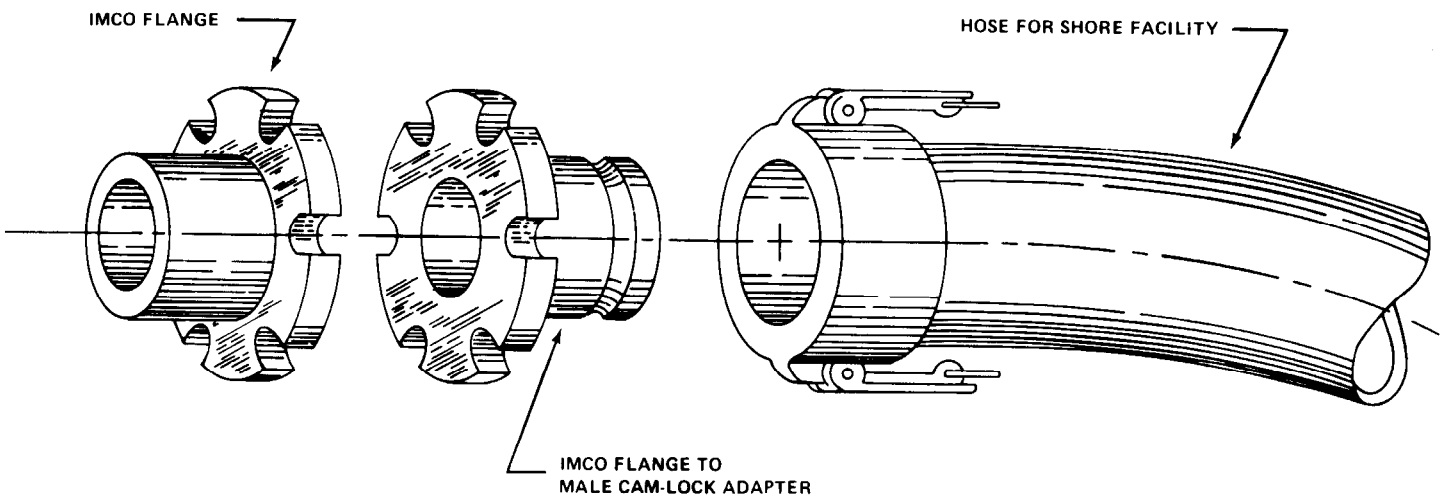

FIGURE 3-10
4-inch Male Cam-lock to IMCO Flange Adapter

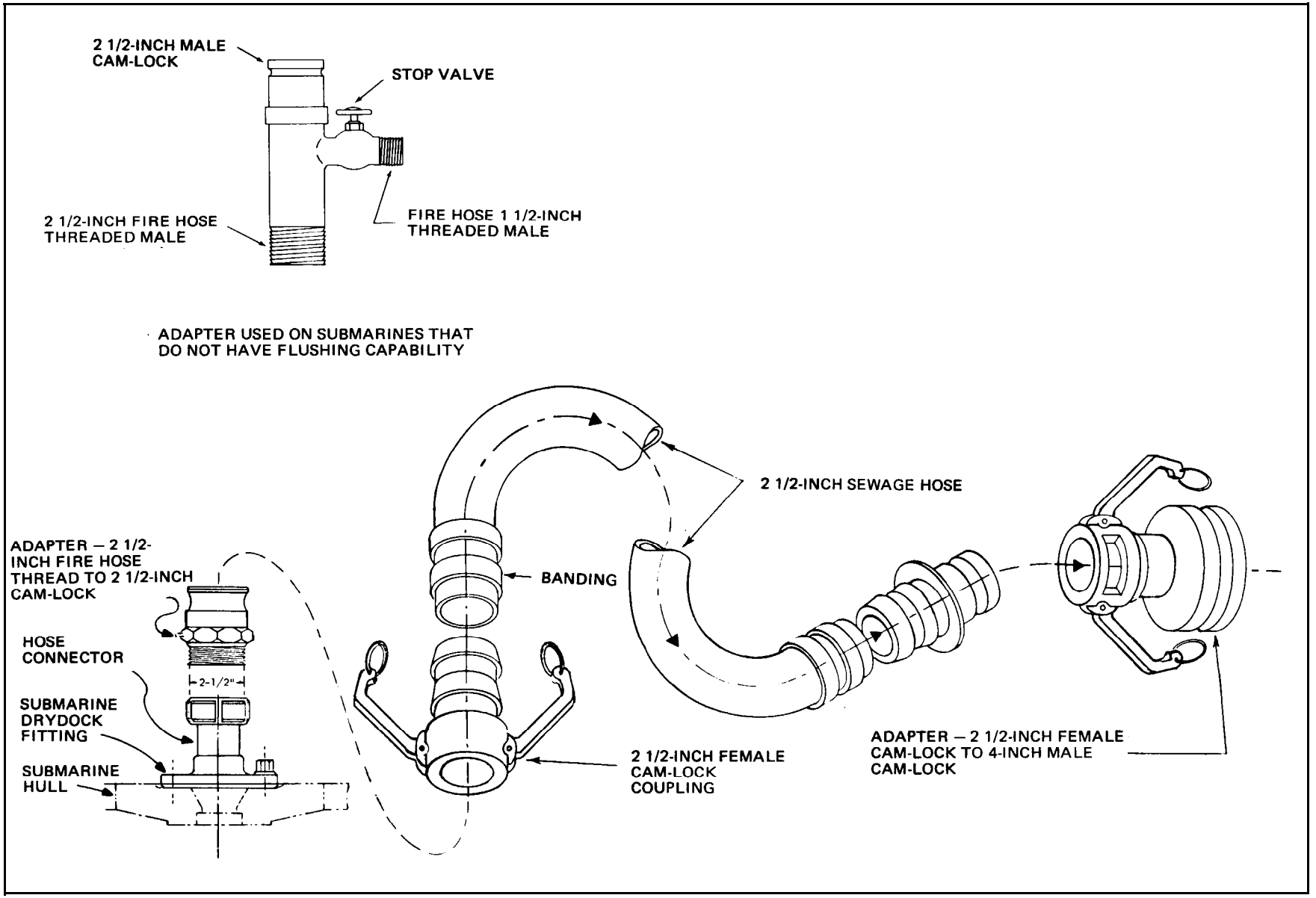

FIGURE 3-11
Submarine Discharge Fittings, Adapters, and Hoses

c. Use of the 90-degree Elbow. Because of the location of the deck connections, many of the submarines will require 90-degree adapters in order to prevent the hose from kinking. This adapter is similar to the 4-inch, 90-degree elbow used by surface ships, but is smaller. It is a 2 l/2-inch, cam-lock quick connect/disconnect, male/female, 90-degree elbow and is illustrated in Figure 3-6.

3.2.4 SERVICE CRAFT/SMALL BOATS. Most U.S. Navy service craft and boats are being equipped with marine sanitation devices (MSD's) or CHT systems.

a. Service Craft/Small Boat Connections. To discharge these systems, the vessels are being fitted with 1 l/2-inch, flush-mounted, threaded, deck discharge connections. Discharge to shoreside pier lines will be accomplished through 1 l/2-inch cam-lock hose. A 1 l/2-inch, threaded male to 1 l/2-inch, male cam-lock adapter is used to connect the hose to the vessel. An additional 1 l/2-inch, female cam-lock to 4-inch, male cam-lock adapter is required to mate the hose to the pier sewage risers. Service craft and small boat discharge connections, adapters, and hoses are illustrated in Figure 3-12.

b. Flushing Pipes and Hoses. After the sewage is discharged to the shore facility, it is necessary to flush the associated tank, piping, and discharge hoses prior to disconnecting from the deck discharge connection. Some of the vessels have the capability of generating their own flush water, but many of the smaller boats lack the necessary equipment. Boats that cannot generate their own flush water will be equipped with a 1 l/4-inch, threaded deck connection and internal piping to enable them to receive flush water from shore. Flush water will be transferred from the shore through 1 l/2-inch fire hoses. A special 1 l/4-inch to 1 l/2-inch, flush water connection adapter is required to mate the fire hose to the deck-flushing connection. This adapter, illustrated in Figure 3-13, has a 1 l/4-inch, threaded male end which attaches to the deck-flushing connection and a 1 l/2-inch, fire hose threaded female coupling which connects to the 1 l/2-inch fire hose brought from shore.

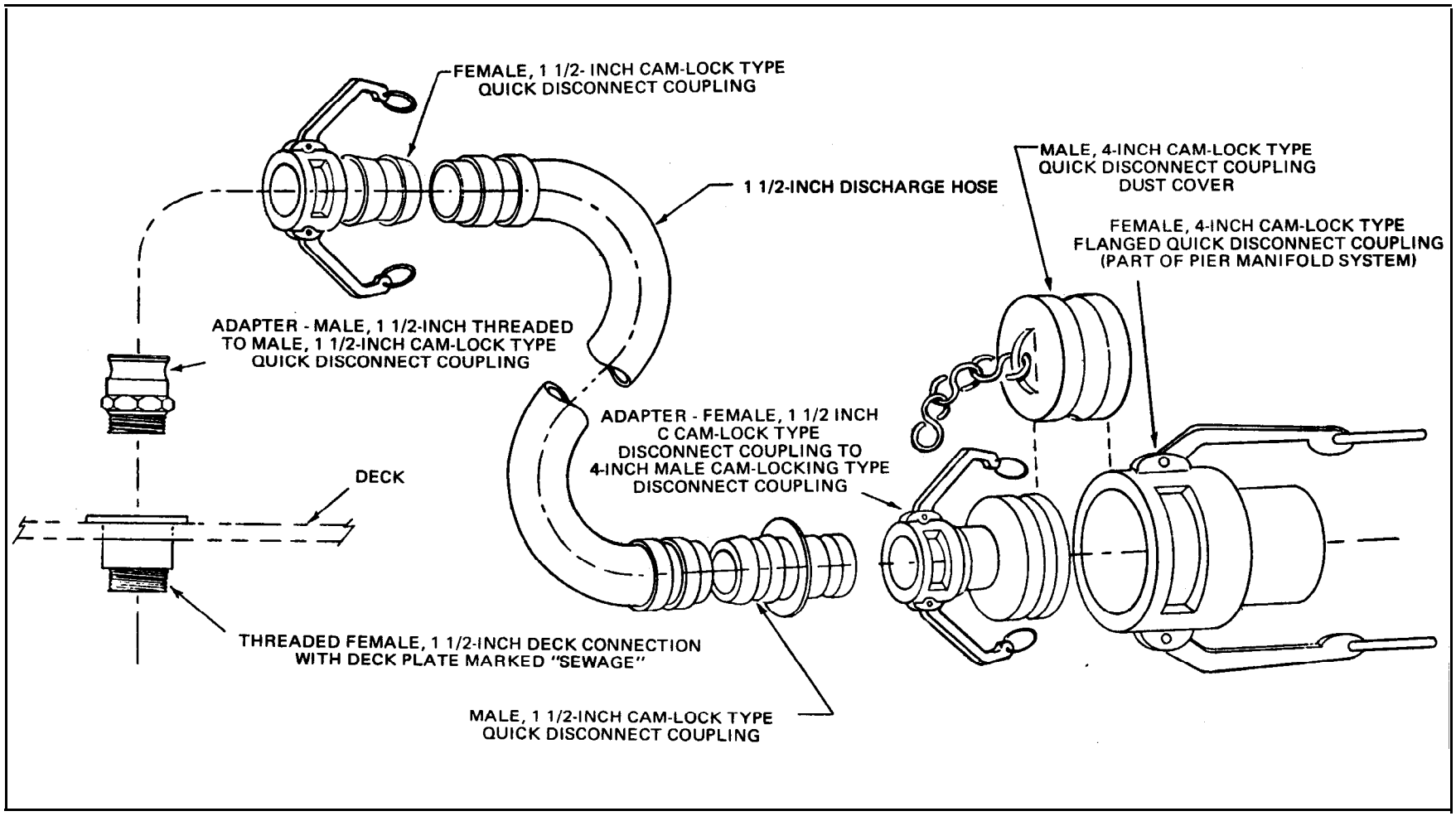

FIGURE 3-12
Service Craft/Small Boat Sewage Discharge Connections, Adapters, and Hoses

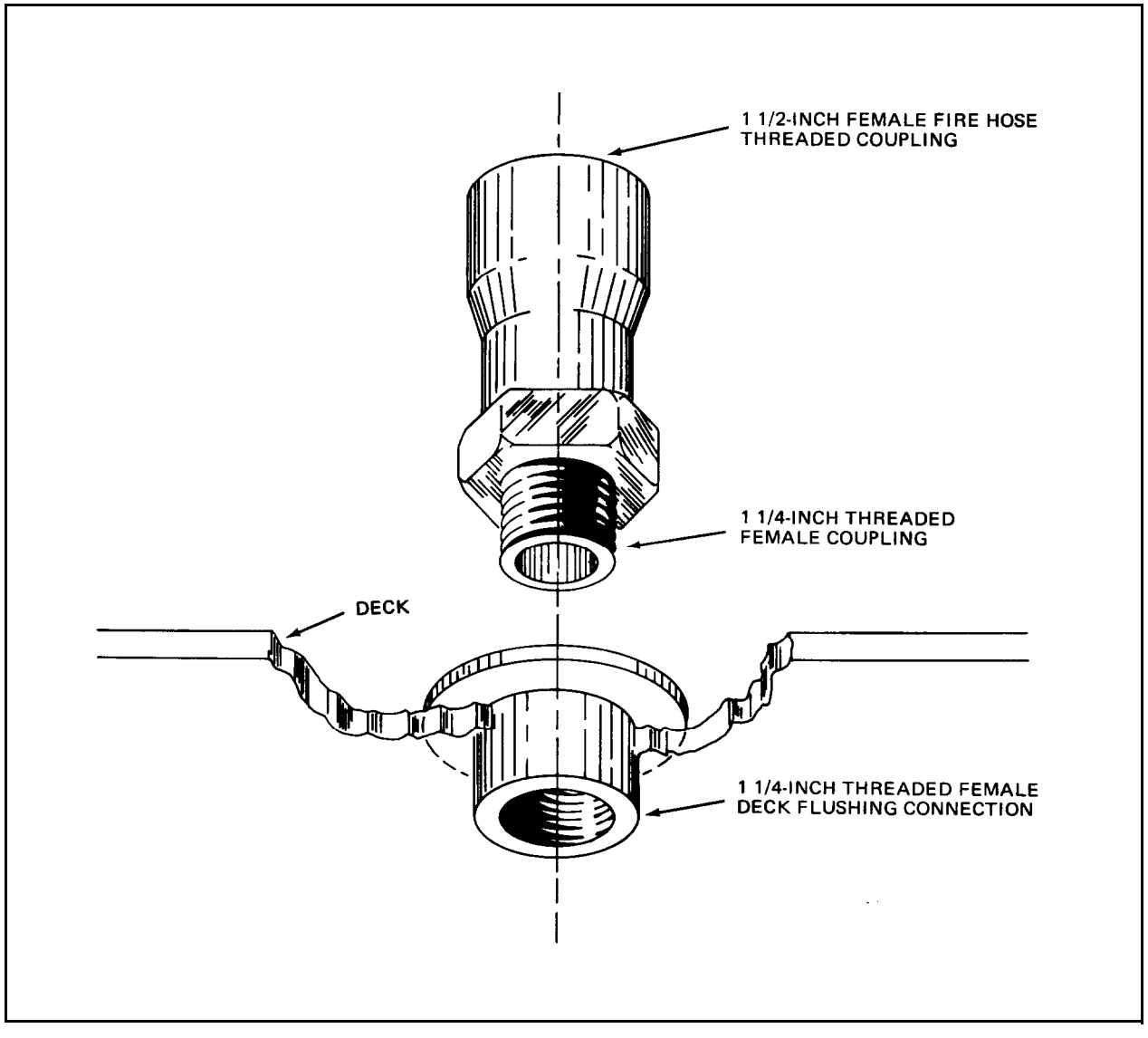

FIGURE 3-13
1 l/4-inch, Threaded Male to 1 l/2-inch, Threaded
Female Coupling Flushing Adapter

SECTION 3. HOSE SUPPORT FACILITIES

3.3.1 LOCATION. Sewage hoses should not be stored on piers, even when stored near the berthing spaces they serve. First, there is usually a shortage of space on piers, making it impractical to consider storing additional gear under crowded conditions. Second, the probability of damage to the hoses is increased if they are left unattended on piers, where there is continuous movement of machinery and materials. Finally, adding to pier clutter by leaving coils or lengths of 4-inch diameter hose laying around increases safety hazards to personnel.

3.3.2 HOSE STORAGE AND CLEANING. Consolidated hose storage offers an economic advantage. Central sewage hose storage on large stations reduces the number of hoses required per station. Deployment of hoses to match the number of ships needing service at any particular time calls for less hoses than keeping an adequate number of hoses in storage at each pier riser.

A central hose cleaning/storage yard should be sized for convenient loading and unloading of 50-foot lengths of hose from the transport vehicle. A minimum installation would cover an area of about 50 feet by 80 feet, and would accommodate the repair, maintenance, and storage of sewage transfer hoses. All hose handling and storage facilities are required to incorporate the following design features to preclude the occurrence of conditions which could promote accidents or communicable diseases:

a. Racks and Tables. Racks and tables used for the handling and storage of sewage transfer hoses shall be constructed of metal or other impervious material. Wooden racks and tables are prohibited.

b. Screening. All windows and doors which open to the outside shall be screened adequately to prevent the entry of flying insects.

c. Back Syphonage Devices. These devices must be installed on all potable water lines used for flushing and cleaning sewage transfer hoses.

d. Lavatories and Showers. These facilities should be provided and equipped with hot and cold running water, dispensable soap, and single use towels shall be provided.

e. Ventilation. Sufficient ventilation shall be provided in all indoor work spaces.

f. Safety Precautions. Incandescent and fluorescent lights shall be protected from breakage. Non-slip surfaces shall be installed on the decks in the hose washing areas.

g. Hose Cleaning. Sewage transfer hose disinfection normally is not required; however, the hose handling facility should have the capability to disinfect them in the event the need arises. One or more small tanks of chlorine solution should be located near the manifold. An eductor will be used to draw the detergent solution from the tank(s) while the hoses are being filled with fresh or salt water.

(1) Hose Washing Rack. The hose washing rack is equipped with a drain to the sanitary sewer (see Figure 3-14). Individual hoses can be connected to the drain by means of a manifold adjacent to the inlet manifold. Pairs of hoses can be linked by U-bends and adapters at the far end of the rack for return flow. Figure 3-15 illustrates the makeup of typical wash rack inlet and outlet manifolds.

(2) Hose Cleaning Apron. A cleaning apron is used for exactly the same purpose as a cleaning rack. It differs from a rack in that it consists of a concrete slab at ground level, measuring just over 50 feet long by 5 feet wide. It is sloped slightly to drain at one end. The apron is equipped with a similar fresh or salt water supply, means of cleaning, and sanitary sewer connection. The apron is provided with curbing to prevent the escape of wash water to the surrounding area. Use of the washing apron requires the shore crew to work at ground level, while the washing rack permits them to work at waist level during the cleaning operation. Figure 3-16 is a view of one configuration of hose washing apron.

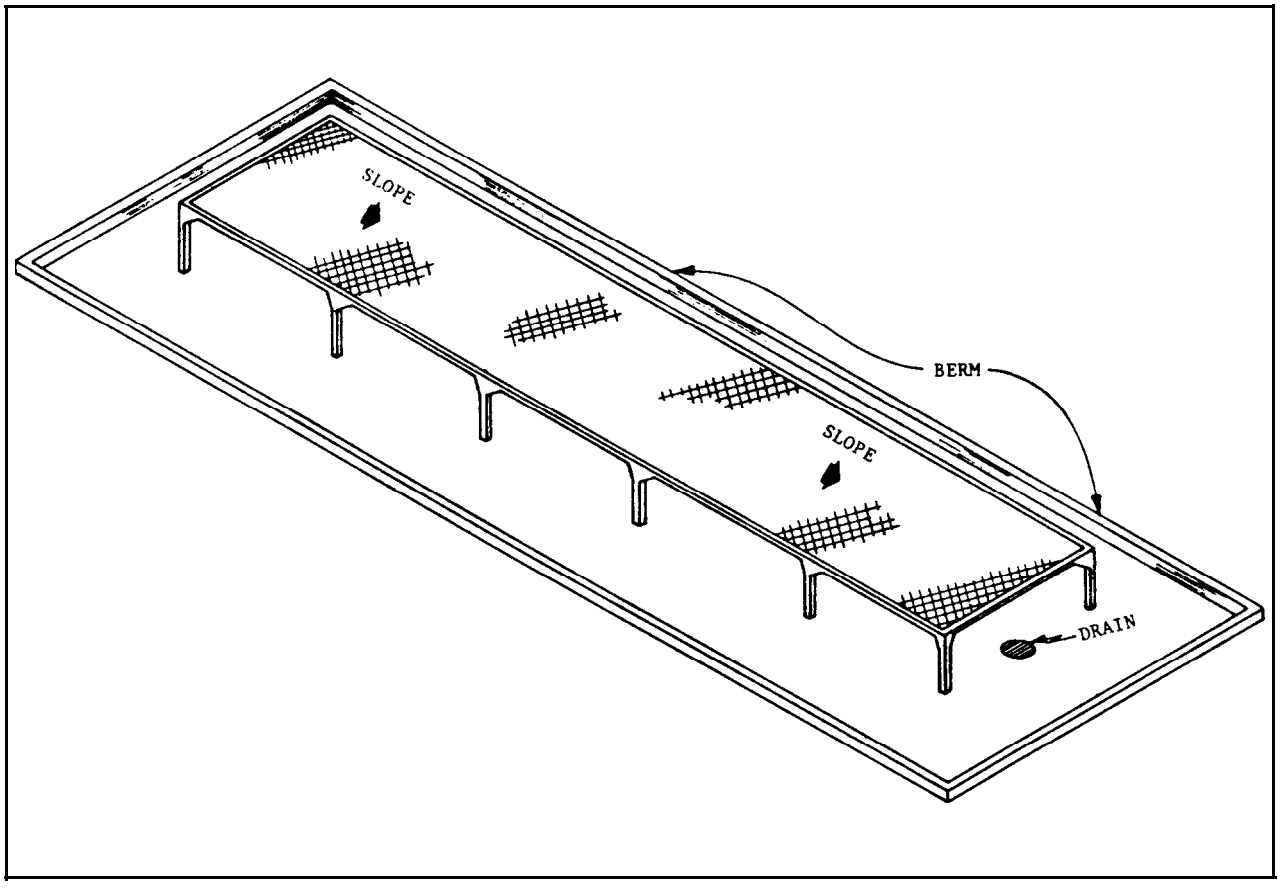

FIGURE 3-14
Hose Washing Rack

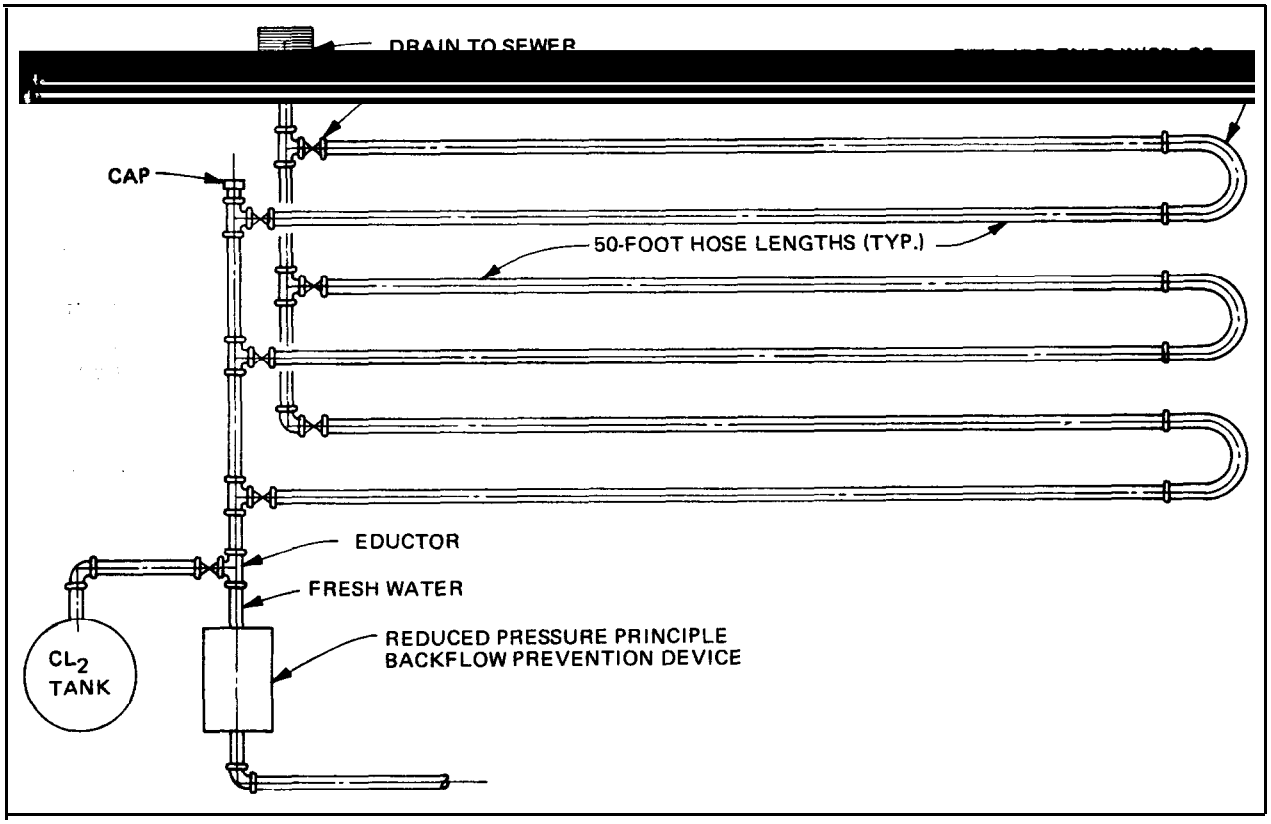

FIGURE 3-15
Washing Rack Inlet and Outlet Manifold

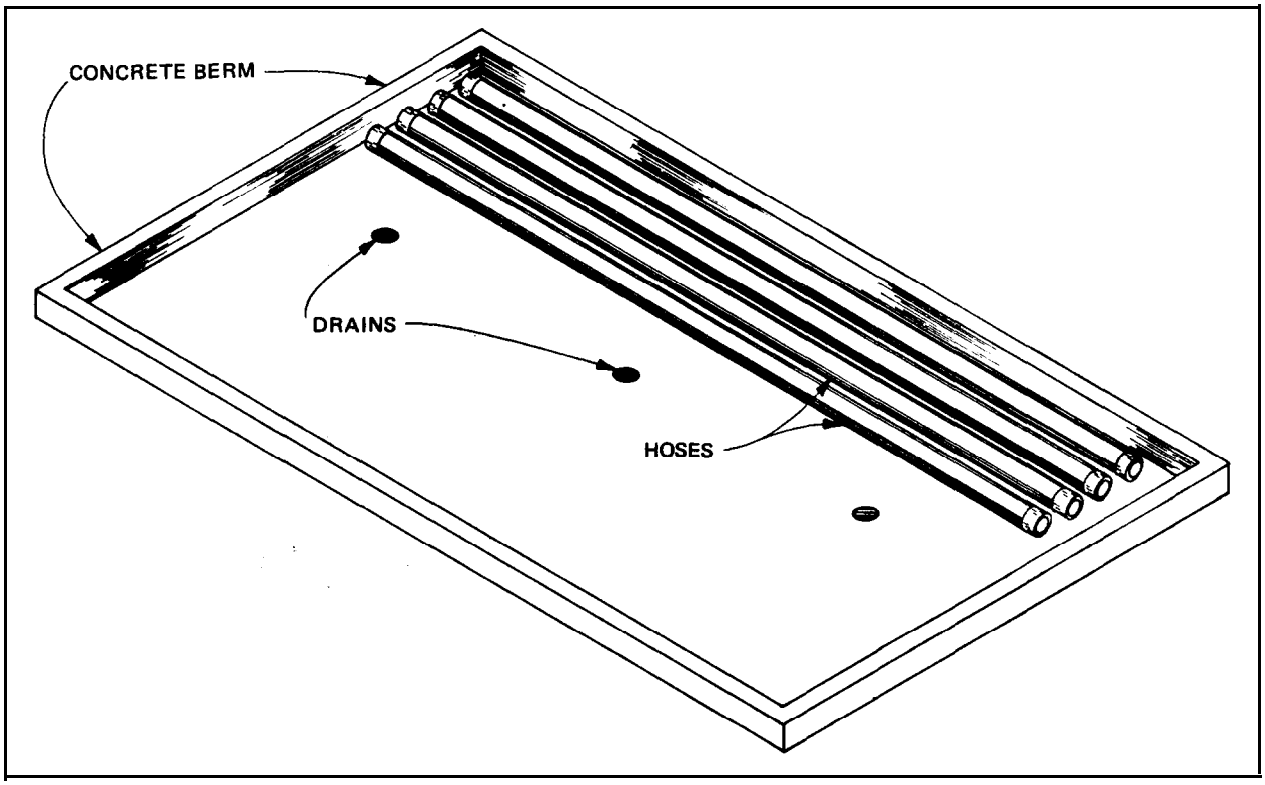

FIGURE 3-16
Hose Washing Apron

h. Health and Safety Requirements. The sewage hose handling and storage facility shall be constructed, equipped, and operated in conformance with appropriate health and safety requirements promulgated by the Occupational Safety and Health Administration (OSHA).

3.3.3 HOSE STORAGE METHODS. After they have been cleaned, sewage hoses are placed in storage. The use of special storage racks is optional. More storage space is afforded with a rack than with storing hoses on the ground.

a. Ground Storage. The simplest method of hose storage is to place them on the ground in coils or in straight lines.

(1) Coiled Hose Storage. Coiled 50-foot lengths of hose can be placed neatly upon a paved surface in the storage yard. Hoses in storage on the ground are separated by size and type, and may be stacked several coils high. Protective covers may be required in cold weather climates so that hoses do not become covered with snow and ice.

(2) Straight Hose Storage. Rubber collapsible and noncollapsible hoses also may be stored in straight 50-foot lengths on the ground. This method of storage is particularly convenient when using the powered hose reel for carrying the hoses to and from the vessels. With this method the hoses are laid out in straight lines adjacent to one another. As with storing coiled hoses, the different types of hoses are not mixed, although they may be placed adjacent to one another. Only a single layer of hoses should be used when hoses are stored in straight lines. Thus, an area approximately 50 feet long by 25 feet wide can be made to accommodate fifty sewage hoses. Figure 3-17 shows hose storage on the ground in both coils and straight lines.

b. Rack Storage. Just as with ground storage, racks allow for storage of sewage hoses in coils or straight lengths. See Figure 3-18. One type of storage-rack installed at NAVSTA, San Diego, consists of a series of concrete shelves, each about 50 feet long and 4 feet deep. The rack is erected at the edge of a hose washing apron. Spacing between the shelves is about eight inches, and the top shelf is approximately 6 feet above the ground. Each shelf can hold four 4-inch wide sewage hoses laid out in straight lines. The entire rack can accommodate approximately sixteen 50-foot lengths of sewage hose.

c. Problems Encountered. The concrete hose racks in San Diego were found to be unsatisfactory for storage of coiled, collapsible rubber sewage hoses.

(1) Storage Space Problems. The narrow clearance of 8 inches between the shelves made it difficult to insert and remove the coils of hose. This problem may be corrected in future designs by spacing shelves farther apart, with hose coils stored as shown in Figure 3-19.

Trial runs at San Diego also showed that storage shelves much higher than 5 feet are not likely to be used for hoses in frequent use. Lifting of hoses above chest level was found to be awkward and tiring, thus reducing efficiency of operation.

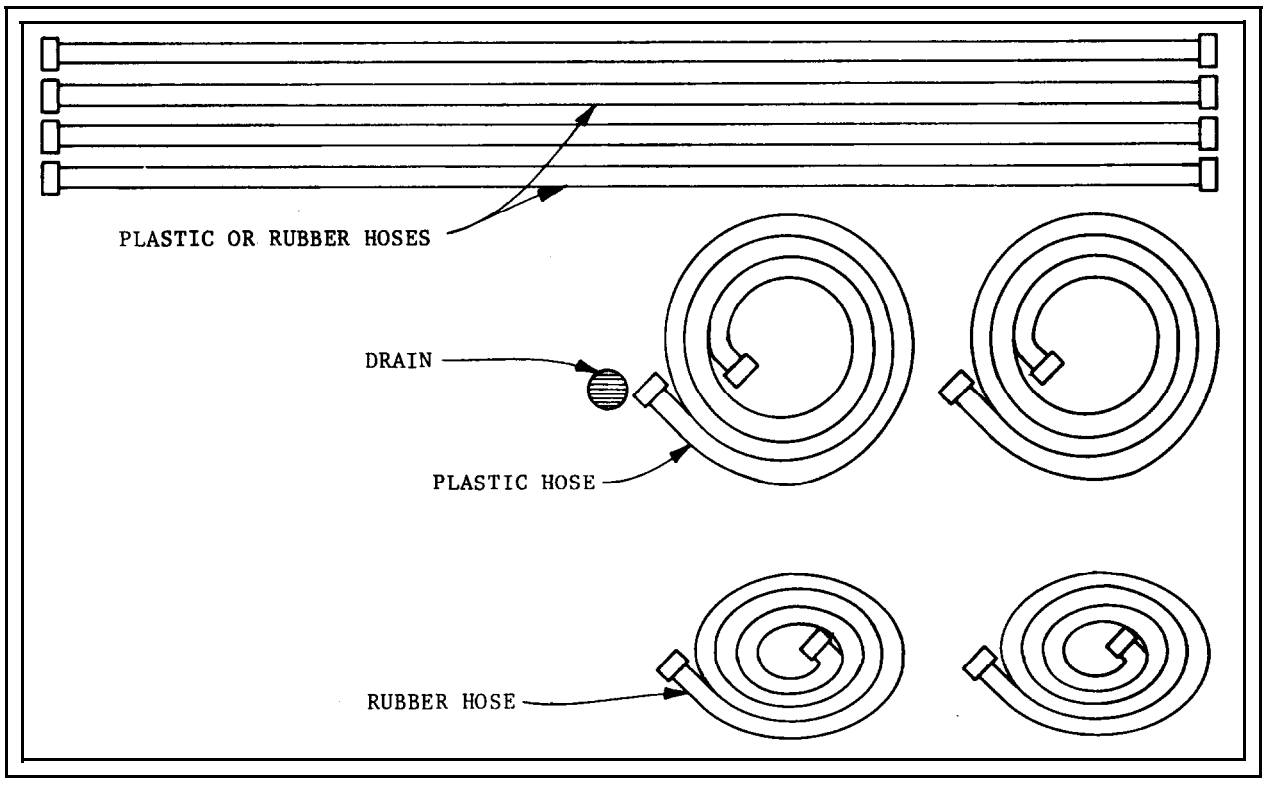

FIGURE 3-17
Hose Storage on the Ground

(2) Safety Hazards. It was found during demonstrations in San Diego that placement of a hose cleaning apron at the base of the concrete storage rack created a potentially dangerous situation. Shore crew members sometimes had to stand upon hoses in the wash apron in order to store clean hoses in the rack immediately above the apron. The same was true for removing hoses. If the apron had been wet, unsteady footing could have led to bodily injury. In order to minimize the potential hazard, no more than two hoses should be cleaned at one time in the cleaning apron of this type of storage unit.

(3) Smaller Hose Storage. Storage and handling of 2 l/2-inch hoses used for transferring sewage ashore from submarines and service craft would be similar to that described for 4-inch, collapsible sewage hoses. These hoses are best stored in coils, as they are easy to handle that way. Therefore, the option of storing 2 l/2-inch and 1 l/2-inch hoses in straight lines should be disregarded.

d. Covered Storage. All of the above methods of storing sewage hose take place outdoors. However, at certain locations where winter snowfalls and icing occur, it would be desirable to provide covered storage. This would eliminate snow and ice removal problems.

e. Protection of Hoses. The principal hazard to sewage hoses is damage from vehicles, cargo, machinery, and sharp objects. In addition, the hoses should be kept away from excessive heat and corrosive chemicals. This can be done by instituting a storage program, using the information provided above.

Submarine Storage

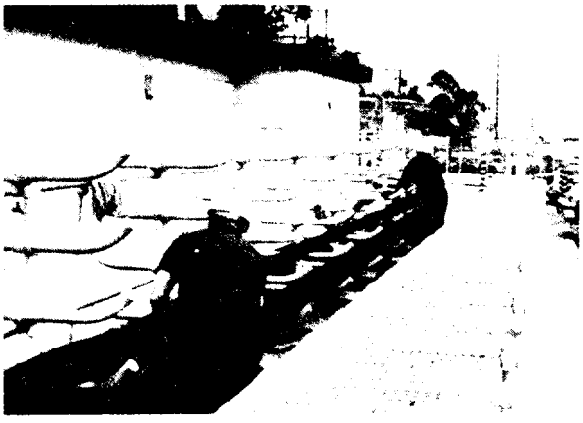

Pipe Storage Rack and Cleaning Table

Washing Apron and Storage Shelves at a Small Activity

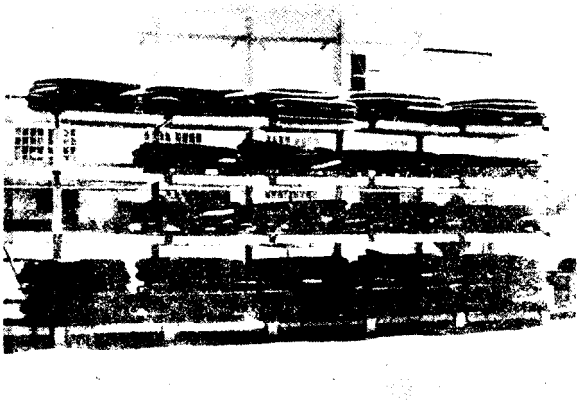

Pallet Storage Facility for Electric Cable/Sewage Hoses

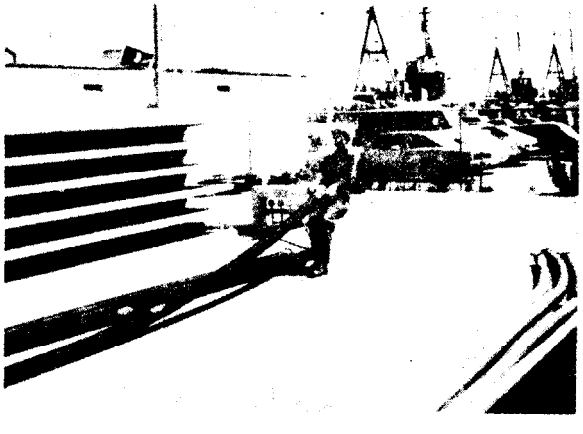

Hose Storage Apron

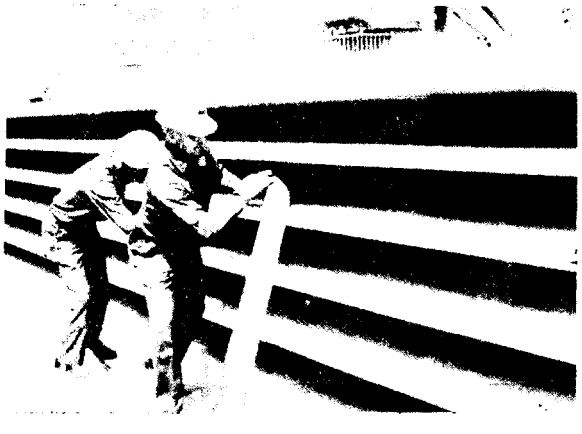

Putting Hose. on Concrete Storage Shelves

FIGURE 3-18
Hose Storage Racks/Aprons

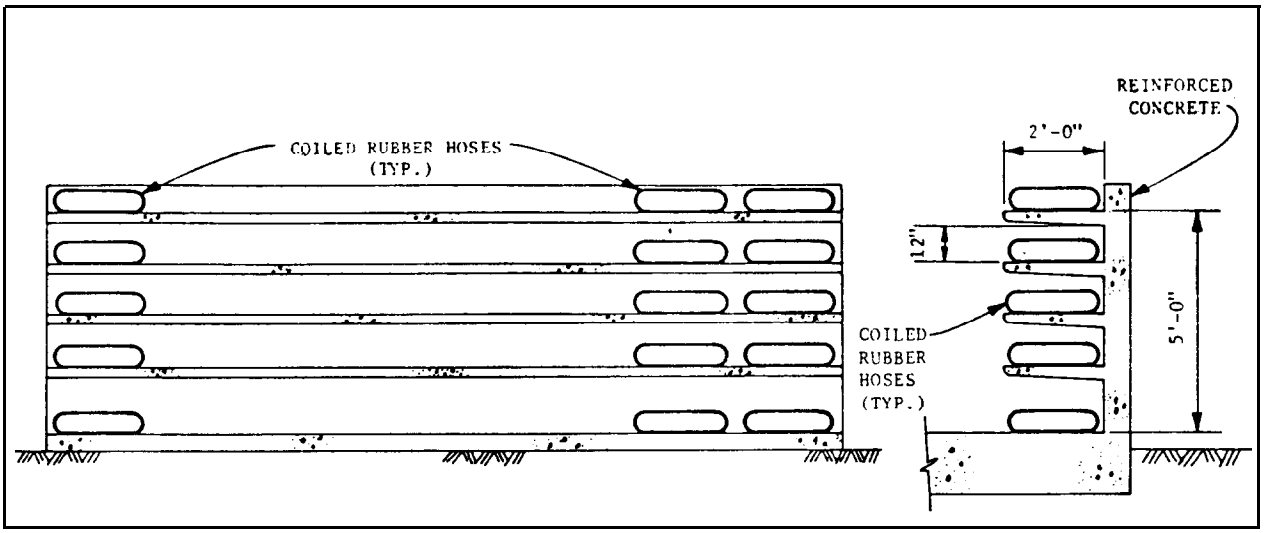

FIGURE 3-19
Storage Rack - Coiled Rubber Hoses

CHAPTER 4. HOSE LOADING

Section 1. MANUAL LOADING

401.1 GENERAL. Loading of hoses involves removing clean hoses from storage and placing them aboard a vehicle for transportation to a berthing space for use. In most instances, this will take place shortly before arrival time of vessels scheduled for sewage transfer. Usually, one ship will be serviced at a time. However, there will be cases in which the shore crew must load enough hoses to service two *or more* ships within a very short span of time, for example, simultaneous arrival of several ships assigned to a single nest. In high turnover ports, the loading operation and all subsequent steps often will have to be performed rapidly when ship arrivals are very closely spaced.

The hose loading procedures are intended to provide a simple and efficient method of responding to the situations described. At the same time, the procedures should lead to the *most* effective use of available manpower.

a. Removing Hoses from Storage. The loading process begins with the clean hoses in storage. As stated in Chapter 3, storage may be in coils or straight lines, on the ground or on a rack. Removal from storage may be completely manual or assisted by power machinery.

Considerable manual effort is required in loading hoses: lifting 130-pound coils from one point to another, removing straight lines of hose from racks to the ground, coiling hoses, dragging hoses along the ground, guiding hoses on the ground, and performing numerous similar operations. When power-assist machinery, such as a hose reel or forklift is used, it is necessary to employ some manual effort to guide the hose being handled in nearly every instance.

b. Lubrication. When hose lengths are removed from storage, the exterior of the male fitting and the interior of the female fitting should be coated lightly with fresh, waterproof grease to facilitate connections and disconnections.

4.1.2 CREW SIZE. Hose loading is not-a one-man job. The minimum shore crew size must be two men. Even when power machinery is used, this rule should be followed. This also applies to all other shore hose handling operations. The rule acts as a safety measure and reduces the level of personnel exertion. The minimum shipboard hose handling crew is three men, with the exception of submarines, where two-man crews may be used.

4.1.3 MANUAL LOADING PROCEDURE. The following methods of manual loading of sewage hoses were tested in San Diego and found to be satisfactory.

a. Hoses Stored in Straight Lines. Collapsible and Noncollapsible Rubber Hoses. The rubber hoses may be stored in straight lines on the ground or in a storage rack, as explained above and shown in Figure 3-18. In either

case, the loading procedure is similar. The following set of steps may be used for both hoses stored in racks and those on the ground. Steps given for single, 50-foot lengths of hose are repeated until the total length of hose needed to connect the vessel(s) has been taken from storage.

(1) If the hoses are stored on a rack in straight lines, they first must be removed from the rack and placed on the ground. One man begins by lifting the fitting on one end of the hose off the rack and placing it on the ground. He then moves along the length of the rack, pulling that section of hose out. The other man follows him, grasping the hose as it is pulled out and lowering it to the ground. This continues along the entire length of the rack until the fitting at the opposite end of the 50-foot section of hose has been placed on the ground. The hose should not be dropped from the rack to the ground.

(2) If the hoses are stored in straight lines upon the ground, the length of hose to be taken from storage should be moved a short distance sideways from the hoses in storage.

(3) After either Step 1 or 2, one man rolls the 50-foot length of hose into a tight coil along the ground, keeping the male fitting on the inside and the female fitting on the outside. After the coil is made it is secured by tying with marline.

(4) The single coil of hose is lifted into the bed of the transport vehicle. Coils of rubber hose are placed flat in the vehicle and may be stacked two deep, if necessary. Eight coils of 50-foot lengths of rubber hose can be carried in the bed of a half-ton pickup truck in this manner.

b. Hoses Stored in Coils. Fifty-foot lengths of sewage hose may be coiled before storing. Storage may be upon the ground or in racks made for storage of coiled hoses, as shown in Figure 3-18. The fifty-foot lengths of both collapsible and noncollapsible rubber hose make up into tight, compact coils. The coils are lifted and handled easily by a two-man shore crew. The steps for loading coils of rubber hose are listed below.

(1) Rack Storage Loading. When the coils are stored on shelves in a hose storage rack, the transport vehicle is brought as close as practicable to the coils that are intended for use. To remove coils of hose from the rack, both men grasp the coil on opposite sides and slide it out. Then the men carry the coil to the transport vehicle without putting it down. The coil is placed flat in the bed of the vehicle. Up to eight coils of 50-foot lengths of rubber hose can be carried in the bed of a half-ton pickup truck.

Under no circumstances should the coils of hose be removed from the rack and dropped on the ground before they are loaded into the transport vehicle.

(2) Ground Storage Loading. If the coils of rubber hose are stored on the ground, the transport vehicle is parked as close to the storage point as possible. Two men grasp the 50-foot coil on opposite sides and lift it into the bed of the transport vehicle. Each coil is placed flat in the bed of the vehicle, which can carry up to eight coils.

Section 2. HOSE REEL TRAILER

4.2.1 POWER-ASSIST LOADING. Navy shore establishments that support large numbers of active Navy vessels will find sewage hose deployment and retrieval techniques greatly enhanced by using a hose reel trailer. The following steps discuss power-assist procedures which may be followed for both collapsible and noncollapsible sewage hoses, stored in straight lines or in coils.

a. Loading/Sewage Hoses Stored in Straight Lines. The procedure for loading the hose reel trailer is identical for both collapsible and noncollapsible sewage hoses stored in straight lines. In addition, the steps for loading are similar whether the hoses are stored on a rack or on the ground.

A trailer mounted, pneumatic powered hose reel, described under purchase description 4630-1562B-79-2 of 11 June 1979, is under central procurement by NAVFACENGCOM. This hose reel trailer permits power-assist loadings of sewage hoses stored in straight lines. The loaded trailer then is transported to the pier site by a truck equipped with 2 5/16-inch ball hitch. At the pier the hose is payed out and lifted aboard ship. Power for the hose reel is supplied by a gasoline-driven air compressor which powers an air motor. The motor engages a gear reduction mechanism which rotates the hose reel at 5 rpm. The reel has a 500-foot storage capacity that accommodates 4-inch sewage hoses. Alternative air supply pressure, from either pier supply or portable compressor, must have a minimum rating of 50 pounds per square inch for quantities of over 50 standard cubic feet per minute. See Figure 4-1.

(1) Loading the Reel from Shelves. When the hoses are stored on shelves, they are removed and laid in straight lines on the pavement adjacent to the storage unit with the male fittings facing in one direction. The transport vehicle is brought as close as possible to the male ends “of the hoses. The first hose is pulled to the vehicle and connected to a hose cap which is attached to the reel. The reel is rotated under power to pull the length of hose aboard. One member of the two-man shore crew operates the *reel,* while the other guides the hose onto the reel.

The first 50-foot length of hose is guided onto the reel until its female fitting is positioned in line with the male fitting of the next length of hose to be loaded. Then the reel is stopped, the couplings are joined, and the reel is started again so the second length can be loaded. The steps are repeated until the reel reaches its capacity.

(2) Loading the Reel from the Ground. If the hose is stored in straight lines on the ground, the procedure is the same as above, except that the hoses do not need to be removed from storage shelves.

b. Sewage Hoses Stored in Coils. The procedures for transporting hoses when no hose reel trailer is available are listed below.

(1) Collapsible Rubber Hoses. For power-assist loading of collapsible rubber hose coils, the hoses must be stored on pallets. Two 50-foot coils of collapsible rubber hose are stored on each pallet. The following steps should be taken for mechanized loading of coiled rubber hoses aboard the transport vehicle. See Figure 4-2.

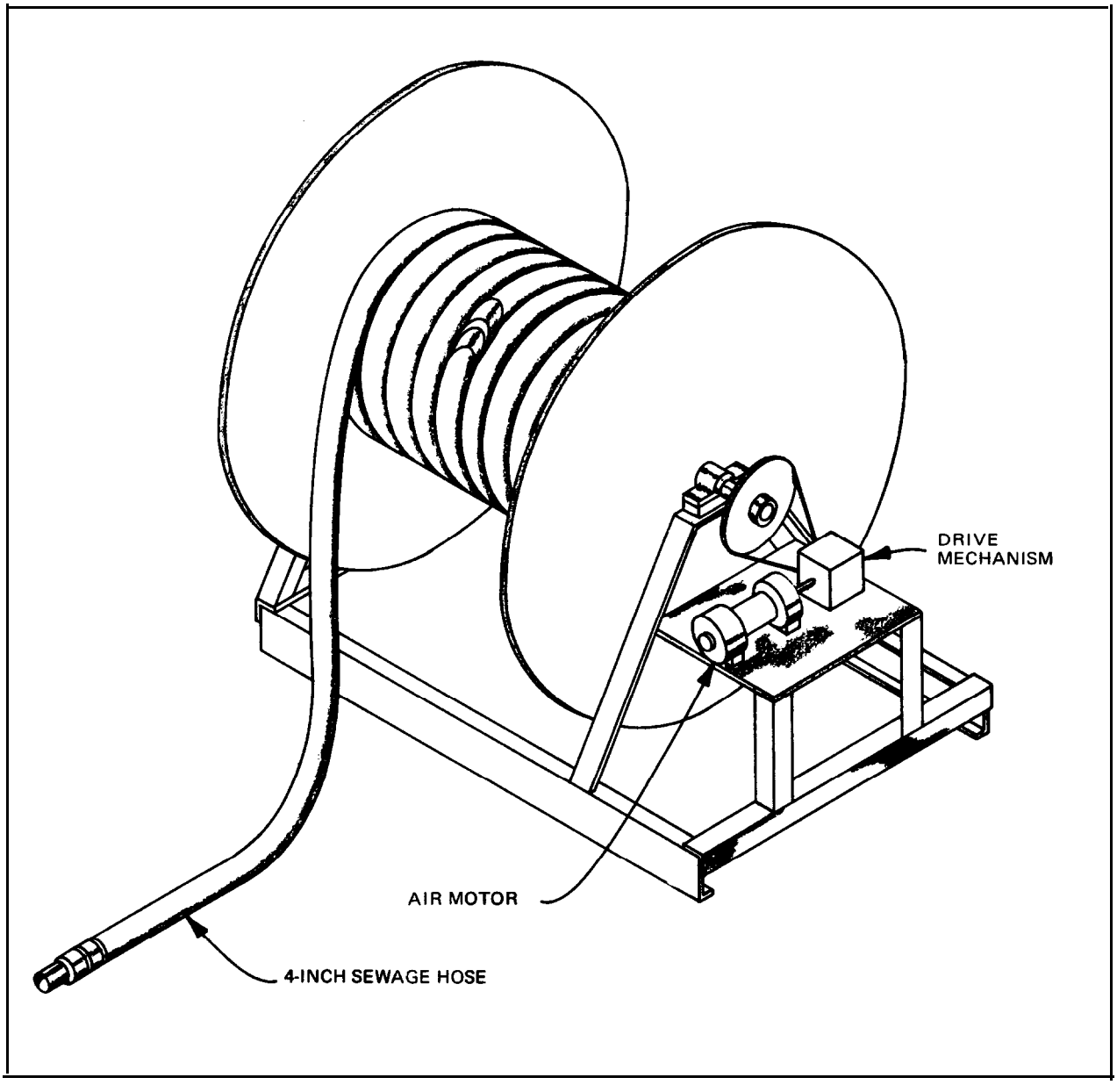

FIGURE 4-1
Powered Hose Reel

(a) The transport vehicle is brought conveniently close to the storage area, allowing enough room for maneuvering of a forklift.

(b) One pallet is lifted by the forklift and placed in the bed of the transport vehicle.

(c) A second pallet is lifted by forklift and placed directly upon the bed of the transport vehicle. DO NOT STACK PALLETS OF COILED HOSE ON THE VEHICLE.

Manual Coiling Collapsible
Rubber Sewage Hose

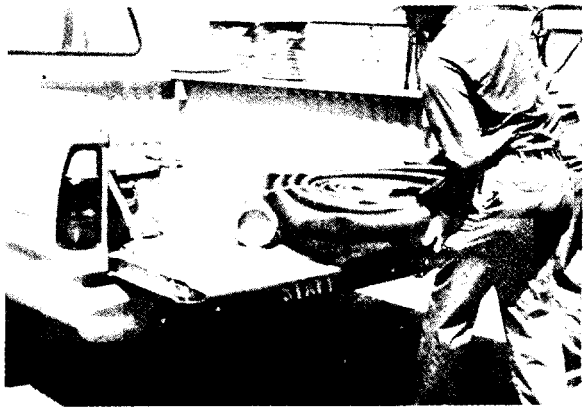

Manual Loading of Coiled Hose

Manual Loading of Hose into
Pickup Truck

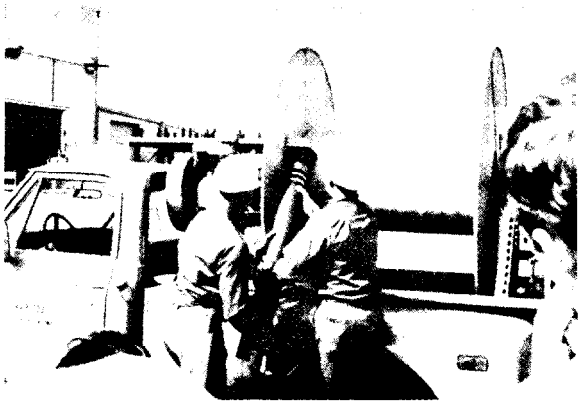

Feeding Hose to Power Reel

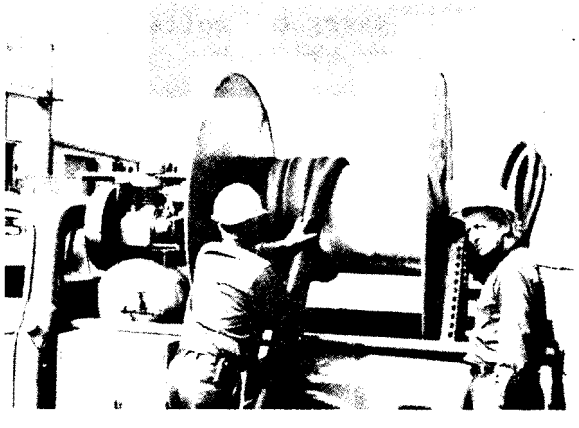

Feeding Hose onto Reel

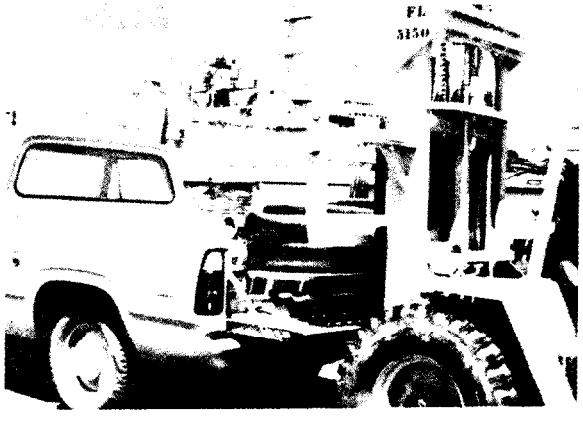

Loading Pallet of Two Hoses
into Pickup Truck

FIGURE 4-2
Hose Loading

Only two pallets of coiled rubber hose should be carried in the bed of the transport vehicle.

(2) Noncollapsible Hoses. The following mechanized loading procedure applies only to 50-foot lengths of reinforced? noncollapsible sewage hoses stored on a rack with shelves.

(a) A forklift having a vertical reach of at least 10 feet is brought to the rack. The forklift is raised to the elevation of the hose support bar of the storage rack. One tine of the fork is slipped inside the first coil of hose on the rack. The fork is elevated slightly, raising the coil of hose off the support bar of the rack. The forklift vehicle is then backed away from the rack, carrying the coil with it.

(b) The forklift carries the coil to the tailgate of the transport vehicle. The coil, in a vertical position, is then lowered to the tailgate of the vehicle. The coil should be supported in the vertical position. The two-man shore crew enters the bed of the vehicle and slides the hose off the fork.

(c) The coil is rotated from the vertical to the horizontal position toward the cab of the vehicle. The two-man shore crew elevates the side of the coil nearest the tailgate, flipping the entire coil end-over-end, until it comes to rest in the vertical position against the cab of the vehicle.

(d) The forklift then proceeds to the rack and obtains another coil in the manner described above. The second coil is placed aboard the truck in the manner described above. The steps are repeated until a standard half-ton pickup truck with a 6-foot bed has four 50-foot coils of noncollapsible sewage hose aboard, in the vertical position. A half-ton pickup truck with an 8-foot bed may carry five 50-foot coils of noncollapsible sewage hose.

(e) The forklift also may be used to carry two coils of hose at a time, cutting down the number of trips it makes to the rack.

(f) The 50-foot coils of noncollapsible sewage hose may be carried as separate coils, or they may be linked together by means of their fittings when in the transport vehicle. With the latter method, a continuous line of hose may be fed from the transport vehicle to the ship.

CHAPTER 5. HOSE TRANSPORT

Section 1. VEHICLES

5.101 USE OF VEHICLES. In nearly every instance, sewage hoses will be transported from the point of storage to shipside in some type of motorized vehicle. The use of vehicles is important, because the location of hose storage is usually several thousand feet or more from the ships to be connected to the sewer system. The hoses are bulky and heavy and, in many cases, in order to make a connection! it will be necessary to transport several hundred feet of sewage hose to shipside in a single load. Other equipment, tools, disinfection solution, and washdown hoses, are brought to shipside at the same time.

a. Congestion. While the transport vehicle is on the pier, it must be able to deliver its hoses under congested conditions. The hose delivery and unloading operation must add as little to the existing congestion as possible. Size, maneuverability, and ease of loading and unloading are therefore important characteristics of an efficient hose transport vehicle.

b. Methods Tested. A number of methods of motorized vehicle transport of sewage hoses were tested at San Diego. The following were rejected: flatbed utility trailer or A-frame trailer, drawn by tug or truck, and fuel hose dollies. The following were found to be satisfactory hose transport vehicles:

(1) Half-ton pickup truck with 6-foot bed, for manual hose handling.

(2) Half-ton pickup truck with 8-foot bed, for manual or power-assist hose handling.

(3) Three-quarter-ton pickup truck with 8-foot bed, for manual or power-assist hose handling.

(4) Half-ton flatbed truck, for manual hose handling.

(5) Three-quarter-ton flatbed truck, for manual or power-assist hose handling.

(6) One-ton step van, for manual or power-assist hose handling.

The pickup and flatbed trucks were found to be very satisfactory for carrying the powered hose reel. The step van was found to need special modification before it could carry a powered hose reel; as a result, the reel was not tested in a step van in San Diego. However, it was concluded that the step van would have the advantage of keeping hoses warmer (thus, more flexible) in cold climates in transporting them to shipside. However, the heating advantage would have no effect on removal of hoses from ships during cold weather.

While it was found that the trailer and tug combination did not lend itself to the congested conditions on San Diego NAVSTA piers, it could prove to be quite satisfactory at stations with a low turnover of vessels and low

pier traffic. Also, the trailer and tug method could prove to be satisfactory on stations with high concentrations of vessels and high turnovers, in uncontested berthing areas along quay walls.

Section 2. OTHER EQUIPMENT

5.2.1 PORTABLE EQUIPMENT. The following equipment should be available on each hose transfer vehicle to assist in making hose connections/disconnections:

a. Hose Handling Equipment

Flat-bar hose supports
Clean male and female connector dust plugs and caps

b. Special Tools

Four-inch plug valve handle (wrench)
Set of flange bolt wrenches
Rubber mallet
Small pry bar
Marline
Mandrel and hammer
Extra gaskets for female couplings

c. Sewage Spill Cleanup Equipment

Hose for flushing area
Several gallons of strong disinfectant solution in tank with eductor
Dry phenolic concentrate
Standard stock detergent liquid
Bucket
Cleaning handbrush
Protective clothing

The cleaning hose should be adapted for connection to the pier salt water supply. The eductor is fitted to the disinfectant solution tank on the truck so that the mixture can be applied to the spill area. This will be described in more detail in Chapter 8, Section 2.3. Dry phenolic concentrate may be used to replenish the disinfecting solution while the crew is away from the yard, or it may be spread in spill areas. The detergent, bucket, and handbrush are used to clean the exterior surfaces of hoses and pier risers that may have been contaminated in a spill.

5.2.2 POWERED HOSE REEL. The major piece of optional equipment which may be carried aboard a sewage hose transport vehicle is the powered hose reel, as illustrated in Figure 4-1. This device permits highly mechanized loading, delivery, pickup, and unloading of the hoses. Operation of the powered hose reel has already been described in Chapter 4.

5.2.3 PROTECTIVE CLOTHING. Protective clothing for the shore crew should be carried aboard the transport vehicle. The protective clothing should be used primarily when cleaning sewage spills and handling hoses and risers

that have been contaminated during sewage spills. It consists of at least two sets of each of the following:

- Rubber boots
- Rubber gloves
- Heavy water resistant aprons
- Coveralls
- Laundry bag for dirty clothing

CHAPTER 6. SHIP-TO-SHORE CONNECTION

Section 1. HOSE DEPLOYMENT

6.1.1 VESSELS AGAINST PIER. For proper disposal of sewage when a vessel is alongside a pier, CHT systems aboard ship are connected to the pier sewer systems by means of ship-to-shore sewage hoses. The ship-to-shore sewage hoses extend from risers on the weather deck of the ship that is against the pier to risers on the pier sewer. Each pier riser contains from one to six valves in manifold; the valves are equipped with quick-connection cam-lock female fittings. These fittings will take 4-inch male cam-lock hose fittings. Adapters are available for connecting 2 l/2-inch sewage hoses.

6.1.2 PROCEDURE. Normally, sewage hose is not carried aboard ship. Sewage hoses are stored ashore in a special storage area away from the pier. At the time of arrival of a ship, a shore hose handling crew will be ready on the pier to deliver the proper amount of clean sewage hoses. Requests for this service are made through the same channel as for other utilities services.

Section 2. SURFACE VESSELS

6.2.1 SHORE FURNISHED HOSES. Surface vessels will use only hoses furnished by the shore station in making ship-to-shore hose connections for conveying sewage to the pier. Wherever there are pier sewers, a hose supply will be available, as well as service to bring the hoses alongside. Sewage hoses brought to the ship will be clean, in good repair, of the proper type and lengths, and in sufficient quantity to connect all of the risers on the vessel to the pier sewer risers in the proper manner.

6.2.2 SHIP CREW TASKS. The ship's hose handling crew ordinarily will work only aboard ship and will not handle hose or equipment on the dock. Sufficient men should be assigned to the crew to haul the hose lengths from the pier to the weather deck of the ship by hand. The number will vary: not less than three men should be assigned, while as many as six men may be needed for ships on which CHT discharge risers are located 50 feet or more above the pier.

While approaching the pier, the ship has its CHT system in the holding configuration, since it is in restricted waters. The shore crew should be waiting on the pier with the proper number of clean hoses, ready to assist in connecting the ship to the sewer. Two or more men of the ship's hose handling crew should be standing by at the first CHT discharge riser to be connected following the ship's mooring. The following tasks are performed by the ship's crew (see Figure 6-l):

a. Immediately after tie-up, the ship's crew heaves hauling line to the shore crew on the pier.

b. The dust cap from the ship's CHT discharge riser is removed.

c. The shore crew bends the line on the female end of the sewage hose to be raised to the ship's weather deck.

d. The ship's crew raises the hose to the deck by hauling in the line by hand, using three men if the deck is close to the pier or four to six men if the deck is 50 feet or more above the pier; the number of 50-foot lengths required to make up a single connection will depend upon the size and configuration of the vessel.

e. After the ship's end of the sewage hose is aboard, the ship's crew waits until the shore end is connected to the pier sewer riser, then removes the plastic dust plug from the ship's end of the hose. Then the crew connects the hose to the CHT discharge riser. The plastic dust plugs will be collected by the shore crew.

f. If collapsible rubber sewage hose is being used, the ship's crew sees to it that there are no sharp bends or kinks in the hose aboard the vessel and then carefully ties the hose to a rail or stanchion or to a saddle support four to ten feet from the riser to minimize kinking and to prevent drips. Figure 7-3 shows the use of old tire rims as saddles.

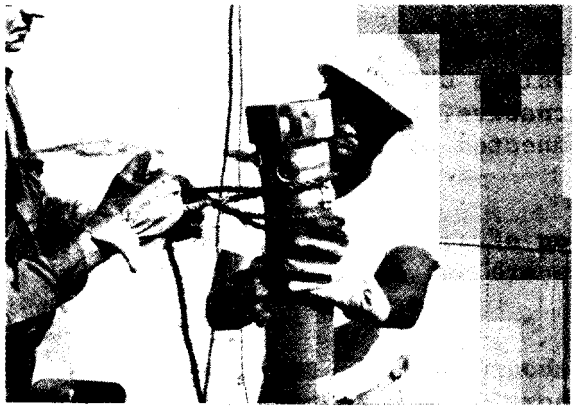

Heaving Line Secured To
Hose By A Clove Hitch

Hose Transfer To Ship
From A Power Reel

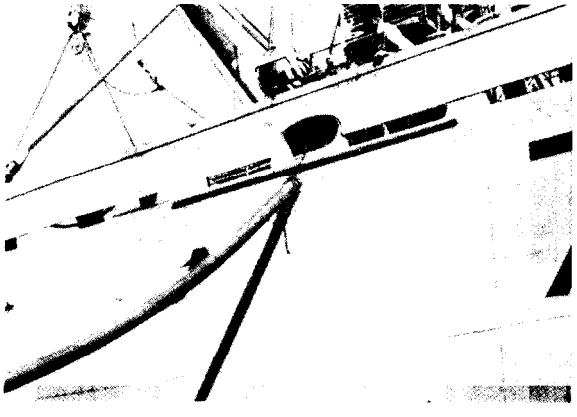

Hose Being Hauled Aboard
Through A Hawse-Hole

Hose Aboard Ship On Deck

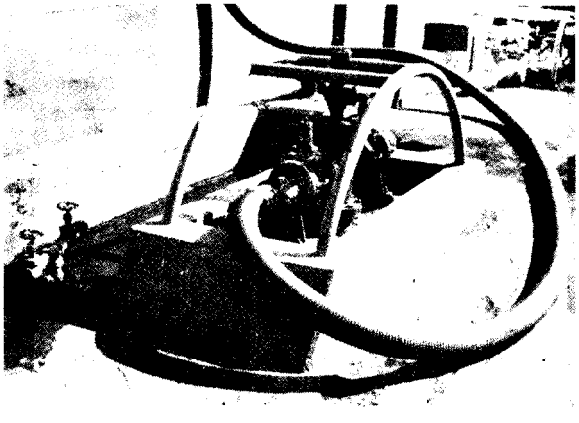

Typical Pier Riser

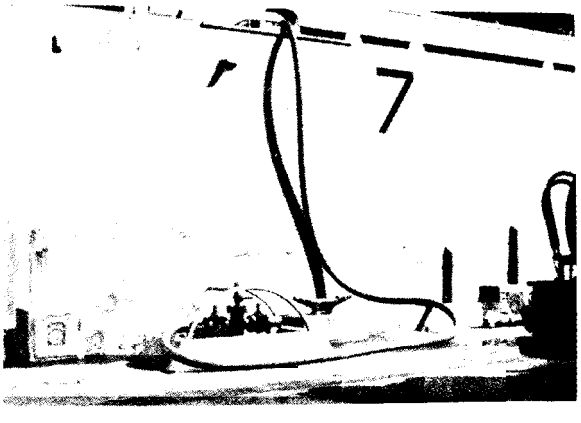

Ship-To-Shore Connection

FIGURE 6-1
Ship-to-Shore Sewage
Transfer Hose Connections

g. Upon receiving word from the shore crew, the ship's crew opens the CHT discharge riser valve and places the ship's CHT system for that riser in the pump-ashore configuration; as an alternative, the ship may wait until all of its sewage discharge risers are connected to the pier sewer before beginning to pump ashore.

h. The ship's crew observes operation of each hose under pressure for at least five minutes to assure that there are no leaks, clogs, or other problems.

i. If there is more than one riser aboard ship, the ship's crew proceeds to each riser and, along with the shore crew, repeats the steps listed above for each riser until the ship is completely connected and pumping ashore.

j. THE SHIP'S CREW SHOULD CHECK FUNCTIONING OF SEWAGE HOSE(S) AT LEAST ONCE DURING EACH WATCH.

6.2.3 SHORE CREW TASKS. The shore crew assists the ship's crew in making the ship-to-shore connection as rapidly and as efficiently as possible, but ordinarily does not go aboard the vessel. No less than two men should make up the shore crew.

The shore crew is advised of the vessel's estimated time of arrival in advance. It is their responsibility to be at the proper berthing space with sufficient clean hoses to provide the needed number of ship-to-shore sewage connections. The tasks of the shore crew in connecting a ship to the pier sewer system are as follows:

a. Coiled, collapsible rubber sewage hoses are handled manually; the shore crew will lift the needed number of 50-foot coils of hose off the transport vehicle onto the pier deck; each coil must be lifted down by at least two men and must not be dropped to the deck.

b. The hoses are then uncoiled into parallel 50-foot lengths on the pier deck.

c. When the hoses are handled and transported by means of a powered reel, the truck carrying the reel is parked on the pier opposite the vessel's CHT riser to be connected, with the axis of the reel parallel to the vessel.

d. The pier sewer riser selected for use should not be directly opposite the ship's riser, but should be forward or aft of the ship's riser to allow the hose to parallel the spring lines when connected.

e. The shore crew removes the dust plug from the pier sewer riser to be used and passes the word to the ship's crew that they are ready.

f. The shore crew receives the heaving line from the deck of the ship and bends it on the ship's end of the sewage hose, taking a clove hitch about the hose above the fitting and shank, and taking a half hitch about the fitting. The female end is raised to the ship.

g. As the ship's crew raises the ship's end of the hose to the ship's deck by means of the heaving line, the shore crew assists and guides the hose on the pier; if the hose is laid out in straight lines on the pier, the shore crew couples the required number of 50-foot lengths prior to hauling, then pulls the hose along the deck as it is being raised.

h. If a powered hose reel is being used to deliver the hose to the ship, the shore crew operates the reel under power to pay out the hose at the same rate the ship's crew is hauling it aboard.

i. When the ship's end of the hose has been raised to the deck and is ready to be connected to the ship's CHT discharge riser, the shore crew connects the pier end of the hose to the pier riser and signals the ship's crew to attach the ship's end of the hose to the ship's riser; the ship's riser is not connected until after the pier riser has been connected.

j. The shore crew then arranges the sewage hose along the pier, avoiding kinking and keeping it out of the way of machinery, vehicles, cargo, and foot traffic; the curvature of the hose should not fall below the curb on the pier. This prevents excessive weight on the hoses and fittings caused by water in the hoses; it is strongly recommended that the hose be parallel to the spring line and that it be supported near the pier riser to prevent a poor seal. A saddle support should be used on the pier if the hose cannot be properly tied off to a rail, bollard, or to the walers to keep it from sagging below the pier risers. Chafing gear should be attached to the hose where it is observed to be rubbing on an abrasive surface.

k. The shore crew opens the valve on the pier sewer riser and signals the ship's crew to open the ship's CHT discharge riser valve; the ship's CHT discharge riser valve is not opened until after the pier riser valve has been opened. As an alternative, the ship and shore crews may wait until all sewage hose connections are complete before riser valves are opened.

l. The vessel's CHT system is then put into the pump-ashore mode; the shore crew observes the hose in operation for five minutes to make sure that there are no kinks, drips, or leaks, and that the pier sewer is functioning properly.

m. If there is more than one riser on the ship, the shore crew proceeds to each riser and, along with the ship's crew, repeats the steps listed above for each riser until the ship is completely connected.

Section 3. SUBMARINES

6.3.1 SHIP AND SHORE CREW TASKS. Usually, a two-man hose handling crew will be sufficient aboard a submarine. The following steps are followed after tie-up:

a. The submarine's hose handling crew proceeds to the side of the boat against the pier and heaves a line to the shore crew waiting on the pier.

b. The shore crew attaches the heaving line to the female end of the first 50-foot length of submarine sewage hose on the pier.

c. The boat's crew begins to haul the initial 50-foot length aboard.

d. As the hose is hauled from the pier onto the deck of the submarine, the shore crew connects additional 50-foot lengths to the initial length until there are enough hoses to reach from the pier riser to the sewage riser on the submarine in a continuous line.

e. The sewage hose then is connected to the sewage discharge riser on the boat.

f. The pier end of the hose is connected to the pier sewer riser by the shore crew, using a 4-inch to 2 l/2-inch adapter, and the hose is arranged smartly across the deck of the boat without kinks.

g. Each additional sewage riser on the submarine is connected to the pier sewer in the same manner, through its own hose line.

h. Pier sewer risers are opened by the shore crew first, and then sewage discharge risers on the submarine are opened by the boat crew.

CHAPTER 7. SHIP-TO-SHIP CONNECTION

Section 1. HOSE DEPLOYMENT

7.1.1 NESTED VESSELS. Ship-to-ship sewage hose connections will occur in two cases: (1) where several surface vessels are nested at the same berthing space on a pier, and (2) where submarines are nested against a docked tender. In the second instance, each submarine is connected separately to the tender, since submarines do not have the “pump-thru” feature of the CHT systems on surface vessels. Similarly, each submarine nested directly against the pier would be connected through a separate hose to the sewage risers on the pier.

Ship-to-ship connections are made on nested surface vessels, where CHT piping permits an outboard ship to pump into the adjacent deck riser of the next inboard ship (see Figure 7-l). The sewage passes through the inboard ship by means of athwartship piping leading to the discharge riser on the opposite side of the ship. The second ship, if it is not against the pier, transfers the outboard vessel’s sewage along with its own sewage to the next inboard ship. Sewage from all of the ships in the nest flows into the pier sewer via the connections of the vessel against the pier. There is no re-pumping of sewage as it passes from ship to ship.

Sewage hose is used to connect the athwartship sewage piping of the nested ships by means of their deck risers. The same type of hose is used for ship-to-ship connections as for connecting ships to pier sewage risers. The CHT systems of several nested surface vessels are linked together by connecting a hose to the inboard riser of the outboard ship and to the outboard riser of the next inboard ship. The second ship connects its inboard deck risers to the outboard risers of the next ship. The steps are repeated until all ships in the nest are connected in series to the ship against the pier. Sewage hoses connect the inboard risers of the ship against the pier with the pier sewer to convey sewage ashore from all the vessels in the nest. Figure 7-2 illustrates schematically the deployment of the hoses.

Sewage hose used for ship-to-ship connection is supplied by the shore activity, which handles all sewage hoses. At the time of arrival of the outboard surface vessel, the shore crew transports the proper length of clean sewage hose from storage to the pier. The hoses are brought to the side of the vessel against the pier at the berthing space. Connection procedures may start as soon as the first vessel is tied up.

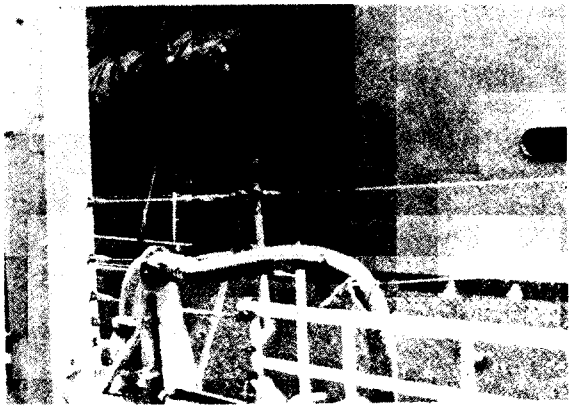

Hose on Inboard
Nested Cruiser

Nested Cruisers Sewage
Transfer Hose Connection

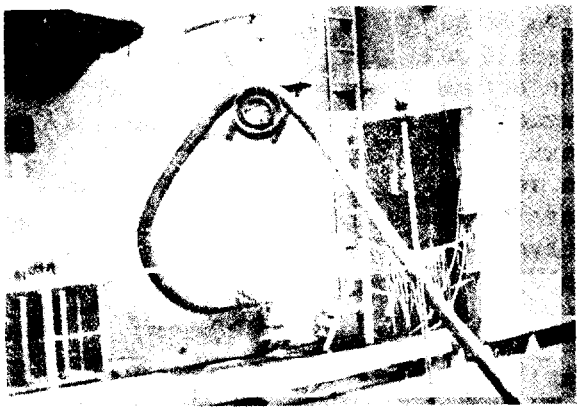

Tire Rim Hose Support to
Clear Passageway

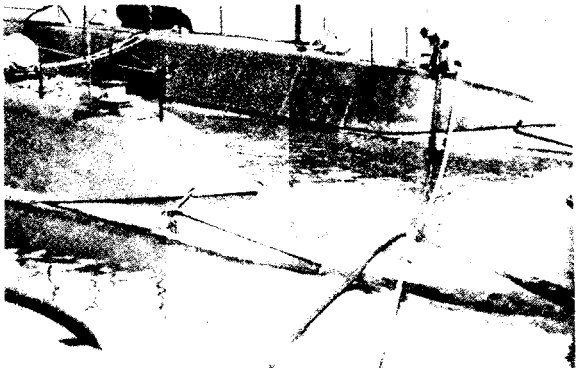

Nested Submarine Sewage
Hose Connection

FIGURE 7-1
Ship-to-Ship Connections

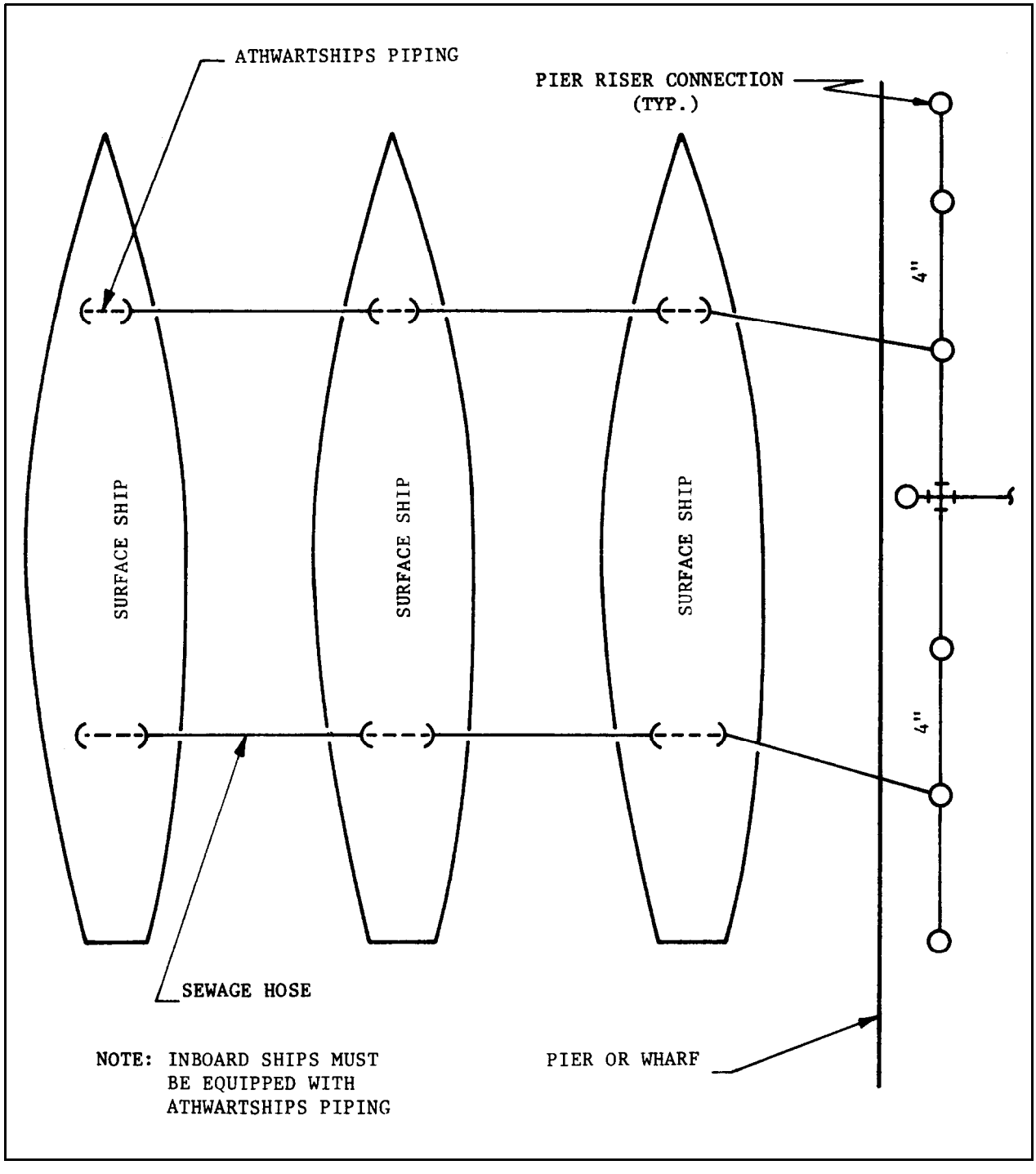

FIGURE 7-2
Hose Connections for Nested Ships

7.2.1 SHORE FURNISHED HOSES. Because of space requirements, the possibility of contamination, and the need for special cleaning facilities, 4-inch sewage hoses for ship-to-ship connection normally are not carried aboard vessels. Because the same hose is used for making ship-to-shore connections, the hose is stored ashore at the *sewage* hose storage facility. Ship-to-ship sewage hoses are identical to ship-to-shore sewage hoses except that the former have female connections at both ends and are shorter in length.

7.2.2 SHORE CREW TASKS. It is the responsibility of the shore crew to take the proper amount of clean hoses to the assigned berth just before arrival of the vessels. If the hose is to be removed manually from the transport vehicle, the shore crew should remove the hose from the vehicle and arrange it in straight lines along the pier. This step applies to both coiled collapsible and noncollapsible rubber hoses. A trailer mounted, powered hose reel also may be used for delivery of collapsible or noncollapsible rubber sewage hoses, in which case the hoses are unreeled directly to the ship as they are lifted.

a. Sizing Hoses. The shore crew must know in advance the proper hose length for reaching from the riser on each outboard ship to the riser on the next inboard ship; to facilitate this, the shore activity may cut hoses to lengths less than 50 feet. Hoses will be passed up to the ships' crews in the proper lengths by linking together sections on the pier during delivery, in cases where the hose is being deployed manually. If the hoses are delivered from coils on the transport vehicle, or directly from a powered hose reel, they will be uncoupled at the proper places to obtain the correct number of feet in each length delivered.

b. Passing Hoses from Pier to Ship. As soon as the outboard ship is tied up, its hose handling crew proceeds to the pier side of the inboard ship. At least four men should be in this group. A heaving line is passed down to the shore crew on the pier. The shore crew bends the heaving line on the female end of the first length of hose to be passed up to the ship, using a clove hitch just above the fitting and a half hitch on the fitting. By heaving in on the line, the ship crew manually lifts the first length of sewage hose to the ship's deck. During this step, the shore crew guides the hose off the pier. If the hoses are being handled manually, the hoses are laid out in straight lines on the pier and guided. When the powered hose reel is used, the reel should be operated at the same rate at which the hose is being pulled aboard ship.

In delivering hoses for ship-to-ship connection, the shore crew's task is limited to passing the proper number of hose lengths to the ship's crew on the vessel nearest the pier. The steps described above are repeated until a sufficient number of sewage hoses have been passed to the inboard vessel so that it can make the necessary number of ship-to-ship connections for the outboard vessel.

When more than two ships nest, the steps outlined above are followed in the same order. The only difference is that the shore crew must deliver and pass more hoses to the inboard ship. In some cases, the shore crew will have to transport more than one load of hoses from storage to shipside before all vessels in a nest are connected.

7.2.3 SHIP'S CREW TASKS. Assuming that two ships are nested, the crew of the newly arrived outboard vessel is responsible for the handling of sewage hoses for connecting to the inboard vessel. The crew's responsibility includes moving the hoses from pierside across the intervening ship. A hose handling crew of not less than four men and preferably six should be designated.

Immediately after tie-up, the hose handling crew of the outboard ship proceeds to the pierside of the inboard ship. A heaving line is passed by the ship's crew to the shore crew. The shore crew bends the line about the female end of the first length of hose to be raised to the ship's deck. The ship's crew raises the hose by manually hauling in on the heaving line. At least two men are needed to pull the hose from pier to ship. As many as six men may be needed, depending upon the height of the ship's deck above the pier.

The hose should be raised to the deck of the inboard ship at the location at which it is easiest for moving hose to the other side. As soon as the forward end of the first length is in the hands of the ship's crew, the following steps are carried out:

a. Two men take hold of the forward end and pull the hose across the inboard ship to the side away from the pier, holding the forward coupling off the deck.

b. As the hose is pulled across the deck of the inboard ship, at least two members of the hose handling crew remain at the rail to continue hauling the hose aboard from the pier; when the aft end of the hose length is aboard, one man guides it across the ship, holding the aft coupling up off the deck.

c. Should it be necessary to use more than 50 feet of hose to span the distance between the two ships, a second (and a third, if needed) section of hose is coupled on the pier; the entire length is hauled aboard and moved across the inboard ship as a unit.

d. When the forward end of the hose reaches the side of the inboard ship away from the pier, two members of the hose handling crew go aboard the outboard ship and station themselves opposite the end of the hose.

e. A heaving line is passed by the men on the forward end of the hose to the men who have gone aboard the outboard ship.

f. The men who have taken the line move to a position on the deck of the outboard ship next to the ship's sewage riser and begin hauling their end of the hose across the space between the two vessels.

g. Hose handling crew members continue hauling the hose aboard ship from the pier and moving it across the ship as it is being transferred to the outboard vessel.

h. When the forward end of the hose arrives at the outboard ship's sewage riser, it is connected immediately to the riser by means of the cam-lock coupling.

i. The hose handling crew members remaining on the inboard ship continue to move the hose across the deck until the aft end of the hose is maneuvered adjacent to the outboard sewage riser on that vessel; during this step, the hose is payed out over the side of the inboard vessel. The hose should not be permitted to loop between ships, as the weight of water in the hose makes disconnection operations more difficult.

j. The hose is connected to the sewage riser of the inboard vessel by a member of that ship's crew; if the hose is collapsible rubber sewage hose, it is arranged, tied off, and supported at either end in such a way that kinking will be prevented as much as possible. This includes the use of saddles on the railings of both vessels (old tire rims will serve as saddles for hose support). Figure 7-3 illustrates use of old tire rim saddles.

k. After the hose is securely in place at both ends, the valve on each ship riser is opened by the crew members of each ship; this ensures that the inboard vessel has completed its connection(s) to the pier sewer and has its CHT system in the pump-ashore mode before the outboard vessel begins to pump ashore.

10 If the newly arrived outboard ship has to connect more than one sewage riser, the above steps are repeated for each sewage riser until the ship is completely connected.

m. Upon completion of the above steps, the outboard vessel places its CHT system in the pump-ashore configuration and begins pumping.

In many cases, several nesting ships will have to be connected at one time, or sewage hoses for ship-to-ship sewage connection will have to be moved across several ships before reaching a newly arrived outboard vessel. The procedure outlined above for two nested vessels will be followed to move the forward end of hose lengths to the second' vessel outboard from the pier. Transfer of the hoses across additional intervening ships would take place by following the same steps as outlined above in moving the hose from ship to ship. When the forward end of the hose finally reaches the vessel to be served, it is connected to the ship's sewage riser in the same manner, while the aft end is connected to the riser of the next inboard ship. Care is taken throughout the hose transfer procedure to carry rather than drag hose couplings across the vessels to prevent damage to the couplings and to the ships. For the same reason, ends of hose lengths must not be dropped over the side between ships; this will result in severe damage to the couplings as a result of impact against the ship's side.

In some cases, it may be impossible for an outboard ship to pump through an inboard ship because of the lack of adjacent sewage risers on the inboard

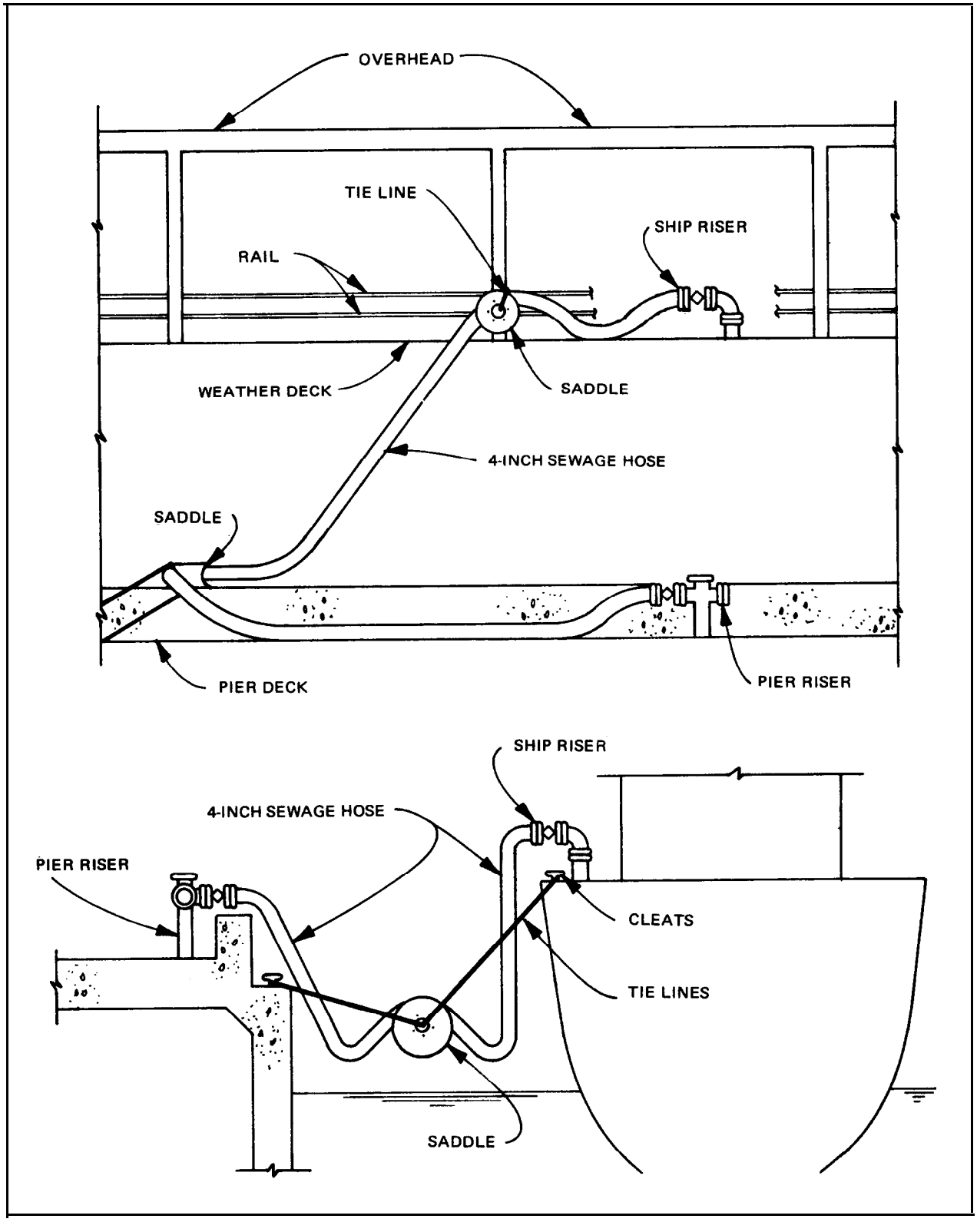

FIGURE 7-3
Use of Tire Rim Saddles for Sewage Hose Support
Surface Vessels

vessel. In these instances, it will be necessary to run sewage hoses from the deck riser of the outboard vessel to the nearest available sewage riser which can be used. This could require the placement of a sewage hose or hoses across the deck of the adjacent inboard ship before connecting to a sewer riser on the following inboard shipIn some instances, running sewage hoses across several ships is required before a ship-to-ship connection is made. If no intervening ship has a riser available for connection, the sewage hoses would have to be run from the outboard ship across all intervening ships and connected directly to the sewage riser on the pier.

Upon completion of ship-to-ship connections, the ship's hose handling crew observes the transfer of sewage through newly connected hoses for at least five minutes to make sure that they are functioning properly. HOSES SHOULD BE INSPECTED BY THE SHIP'S CREW AT LEAST ONCE EACH WATCH TO DETECT LEAKAGE OR OTHER PROBLEMS.

7.2.4 USE OF SHIPBOARD CRANES. Shipboard cranes often can be used to transfer sewage hoses across the deck of a tender (or other surface ship) for hooking up surface ships nested outboard of the tender. For this procedure, the required number of sewage hoses are removed from the vehicle and laid out on the pier. The hoses are connected, and each length is doubled over. Then the hoses are gathered together with a nylon strap and the strap is attached to the tender's inboard crane. After attachment, the hose is lifted to the top of the tender and transferred to the outboard crane. From there, the hose is lowered to the inboard ship in the nest, and manual hose handling procedures can begin.

Section 3. SUBMARINES

7.3.1 SHORE FURNISHED HOSES. Submarines do not have ship-to-ship connections as surface vessels do. Nested submarines must connect to the tender or pier sewer for disposal of sewage in port. This is done by following a somewhat different procedure from that outlined above for surface vessels. The differences are due to the size of the hose used, the configuration and size of the submarine, and the lack of "pump-thru" capability by submarines.

The light weight of the 2 l/2-inch sewage hose used for submarines, the low silhouette of submarines, and their uncluttered decks contribute to the ease of handling of the hoses. On the other hand, since each unit in a nested group of submarines must be attached to the tender or pier sewer by its own set of hoses, longer hose lengths must be used.

7.3.2 SUBMARINE NESTED AGAINST PIER. Figure 7-4 illustrates the hose configuration used when submarines are nested directly against a pier. Figure 7-5 shows the hose configuration when submarines are nested against a tender.

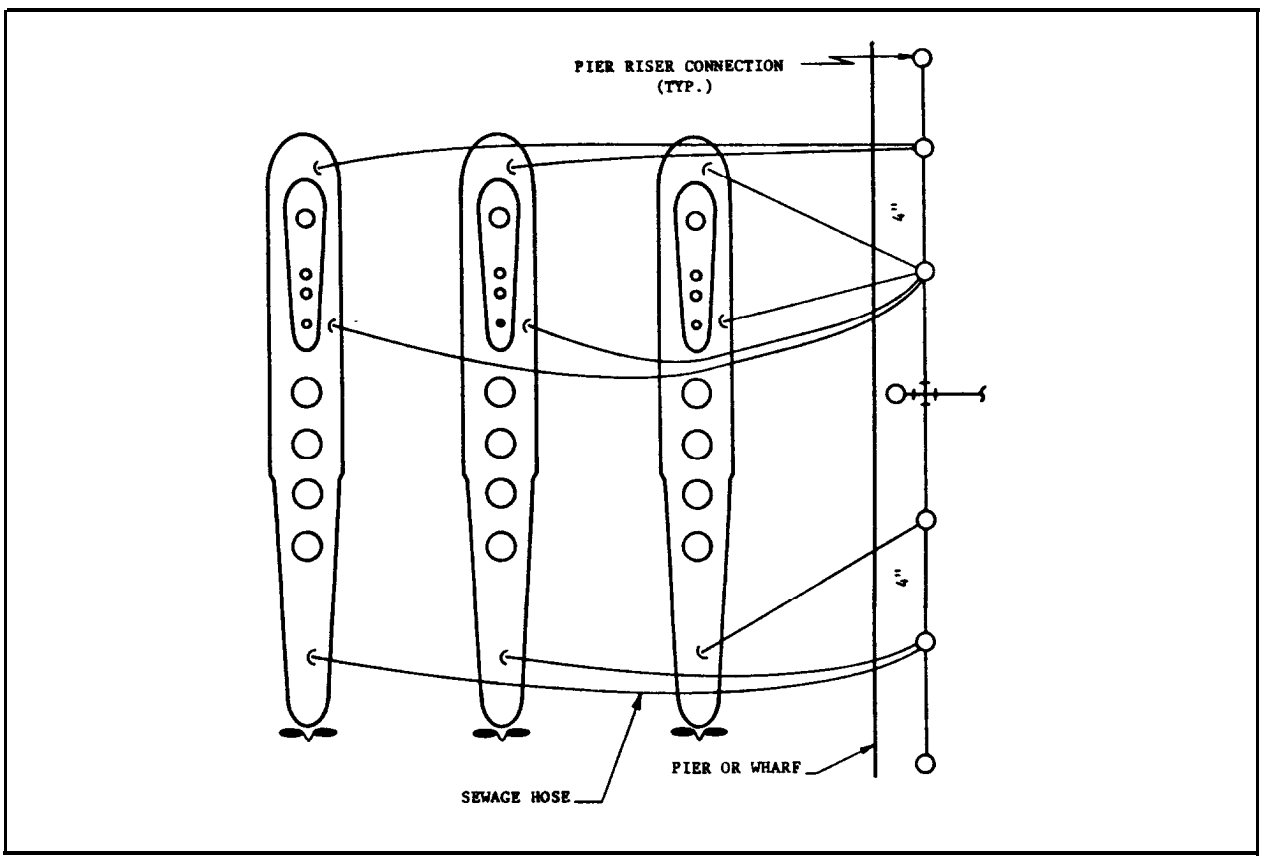

FIGURE 7-4
Nested Submarines Direct Connections to
Pier Sewer - Hose Configuration

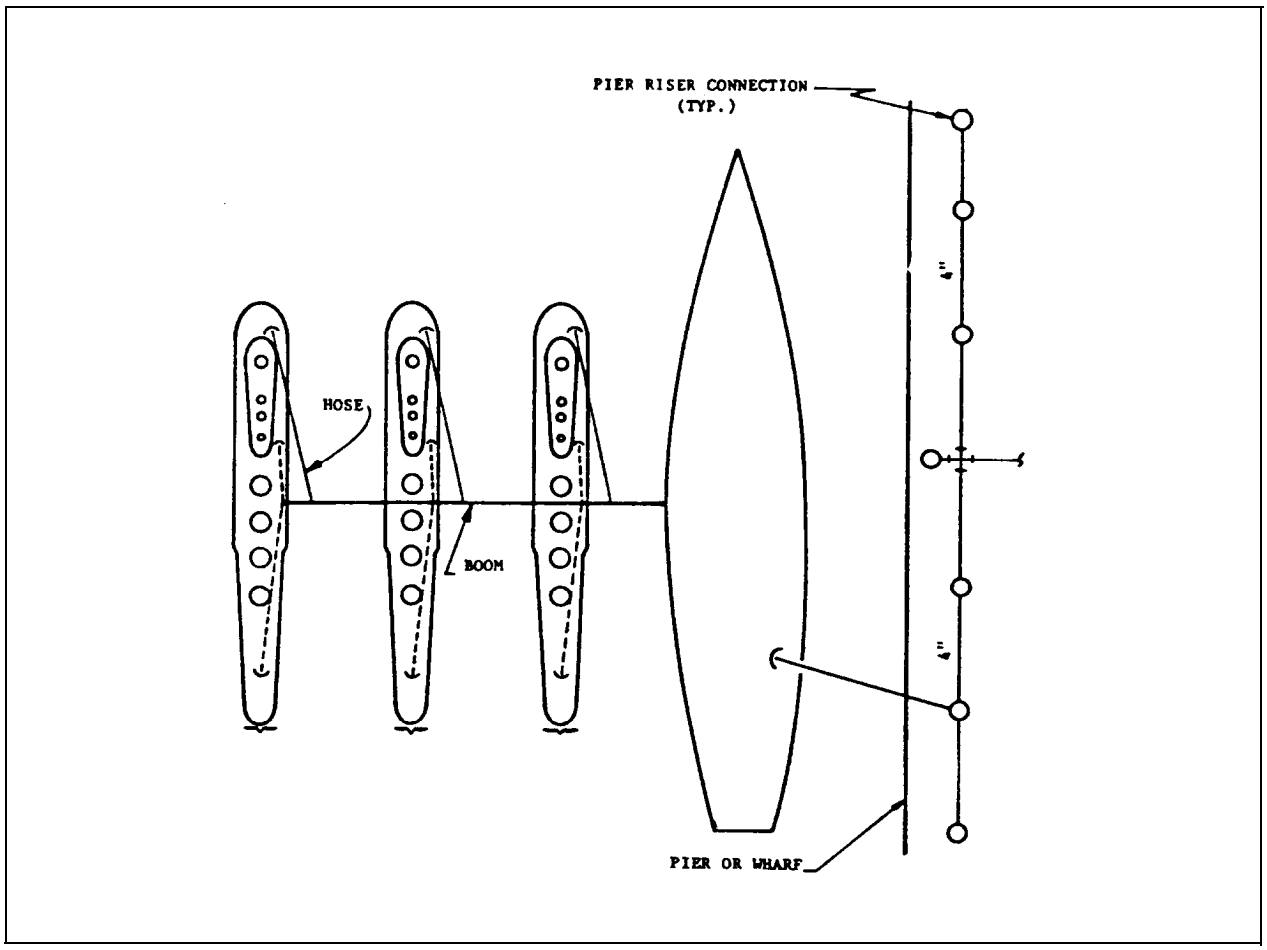

FIGURE 7-5
Submarines Nested Against Tender--Hose Configuration

Usually, a two-man hose handling crew will be sufficient aboard a submarine. The following steps are followed upon tie-up of an outboard submarine in a nest of submarines:

a. The newly arrived submarine's hose handling crew comes to the side of the boat against the pier and heaves a line to the shore crew waiting on the pier.

b. The shore crew attaches the heaving line to the female end of the first 50-foot length of submarine sewage hose upon the pier.

c. The boat's crew begins hauling the initial 50-foot length aboard.

d. As the hose is hauled from the pier onto the deck of the first submarine, the shore crew connects additional 50-foot lengths to the initial length until there is enough hose to reach from the pier riser to the sewage riser on the outboard submarine in a continuous line.

e. When enough hose is aboard the first submarine to reach the deck of the outboard submarine, one member of the crew boards the outboard submarine and takes a position opposite the location of the hose.

f. The member of the hose handling crew on the inboard submarine heaves the hauling line over to the man waiting on the outboard submarine.

g. The sewage hose is hauled over to the outboard submarine by means of the line and is connected to the sewage discharge riser on that boat.

h. The pier end of the hose is then connected to the pier sewer riser by the shore crew, using a 4-inch to 2 l/2-inch adapter, and the hose is arranged smartly across the decks of the boats without kinks.

i. Each additional sewage riser on the outboard submarine is connected to the pier sewer in the same manner through its own hose line.

j. Sewage discharge risers on the submarine are opened by the boat crew, and pier sewer risers are opened by the shore crew.

7.303 SUBMARINES NESTED AGAINST TENDER. The above steps outline the method of connecting outboard submarines to the pier sewer. When submarine are nested with a tender, the same steps are followed with several important exceptions. These exceptions are:

a. The tender's hose handling crew takes the place of the shore crew.

b. The tender supplies the hoses, one per submarine; the hoses must be shifted as each sewage tank is blown.

c. The submarines' sewage discharge hoses are connected to a boom on the tender, rather than to risers on the pier, as shown in Figure 7-5.

d. Upon completion of ship-to-ship connection, the ship's hose handling crew observes the newly connected hoses transfer sewage for at least five minutes to make sure that they are functioning properly. HOSES SHOULD BE INSPECTED BY THE SHIP'S CREW AT LEAST ONCE EACH WATCH TO DETECT LEAKAGE OR OTHER PROBLEMS.

7.3.4 THREE OR MORE NESTED SUBMARINES. In cases where three or more submarines are nested at the same berthing space, the steps outlined above would be used to extend the hose the entire distance from the pier to the boat to be connected. The shore or tender crew will see to it that sufficient hose is available to form a continuous line from the boat to the pier or tender riser. One criterion for judging the necessary length of hose is: where two submarines are nested, it takes 400 feet of hose to connect the three deck risers of the outboard submarine to the pier.

Section 4. SHIP WASTE OFFLOAD BARGE, SEWAGE

7.4.1 DEPLOYMENT AND USE OF SEWAGE BARGES. Thirteen barges configured to receive and transport ships' sewage have been assigned to Navy activities. UNDER NO CIRCUMSTANCES SHOULD SHIP SEWAGE BE LOADED ABOARD BARGES THAT ARE DESIGNATED TO BE WASTE OIL BARGES, OR VICE VERSA.

Ships at anchor or moored in the stream eventually will pump their sewage through CHT systems to sewage barges for transfer to shore. Sewage barges will be towed periodically to pierside for emptying into the pier sewer system. Ordinarily, this operation will occur at a space reserved for sewage barges. However, if necessary, a sewage barge may pump its contents into the pier sewer system at any standard pier sewer riser. The barge crew should notify the shore crew of an intent to discharge to the pier sewer system. DURING ALL TOWING, LOADING, AND UNLOADING OPERATIONS, THE AIR COMPRESSION SYSTEM SHOULD BE OPERATED.

a. Sewage Transfer from Ship to Barge. Upon arrival at a ship, the barge crew heaves a line to the ship's hose handling crew. The ship's crew hauls the ship's end of the sewage hose up to the ship in the vicinity of the deck sewage riser on the ship CHT system. The sewage hose is connected to the ship's riser and properly tied off and supported. The barge end of the hose remains connected. Riser valves on both the ship and the barge are opened. Then the CHT system is placed in the pump-ashore configuration and the ship begins discharging sewage into the barge. THE BARGE'S AIR COMPRESSION SYSTEM SHOULD BE ON WHEN LOADING THE BARGE.

b. Unloading the Barges. Sewage barges will carry their own hoses and should not need service by a shore crew for connection to pier sewer risers. However, shore support will be needed to provide electrical connections to the SWOB. Upon arrival at pierside to tie up, hose is hauled ashore manually with a heaving line by members of the barge crew. The hose is connected to a pier sewage riser and the valve of that riser is opened. With the air compression system remaining on, discharge valves aboard the barge are opened and sewage pumps started. After the barge has discharged its sewage cargo, salt water from the pier is connected to the salt water riser on board the sewage SWOB. This will activate the orbijet sprayers. The orbijets should be operated for a period of at least 15 minutes to ensure that the tanks are washed adequately. Once washdown is completed, the pumps on board the SWOB are activated and the washed tank is emptied through the sewage hose to the pier. After the tank has been stripped, it is recommended that a second 15-minute tank washdown be performed. This will ensure that the tanks are cleaned and that the sewage hoses have received sufficient flushing.

Following salt water flushing, the pier salt water is secured and the pier sewer riser valve is closed. All discharge valves on the barge are closed. The pier end of the hose is disconnected from the pier riser and transferred manually to the barge via a heaving line. The barge is then ready for additional assignments.

Scheduling and rotation procedures for sewage barges must be developed locally. Factors to be considered include: number of barges available, number and sizes of ships to be serviced, tug availability, and distances to

be traveled. The ship's engineering officer should be briefed on the barge's operation before the barge is left with the ship. Additional information on the sewage SWOB will be provided in the barge operating and maintenance manual to be issued by NAVFACENGCOM in 1980.

CHAPTER 8. SHIP-TO-SHORE DISCONNECTION

Section 1. DISCONNECTION PROCEDURES

8.1.1 HOSE FLUSHING. Before a vessel gets under way, it places its CHT system in the holding mode and stops pumping ashore. The steps necessary for disconnecting sewage hoses begin by flushing the hoses with salt water. This function is performed by admitting high-pressure salt water from the ship's fire-fighting system into CHT discharge piping. Salt water then flows through the ship's piping to the open discharge riser, through the hose, and into the sanitary sewer.

The flow of salt water dilutes and flushes away sewage remaining in piping and hoses after pumping ashore has stopped. The volume of salt water flow should be high enough to flush the hoses full bore, and the flushing should continue for at least 10 minutes. By the end of that time, the interior surfaces of the hoses should have been flushed by several thousand gallons of salt water. Experience at San Diego shows that a significant reduction of bacteria counts results from a proper salt water flushing operation.

8.1.2 FLUSHING PROCEDURES.

a. Surface Vessels. All class ships in the Navy other than the DD963 have the hose flushing capability. The following steps are carried out by ship and shore crews for proper flushing of sewage hoses before disconnection:

(1) The sewage discharge hose(s) remains in place throughout the salt water flushing procedure; the pier sewer riser valve remains open, and the CHT riser discharge valve aboard the vessel remains open.

(2) The ship crew aligns the CHT system for sewage holding and secures sewage pumps; 40 psi salt water is then admitted to the CHT discharge piping from the ship's fire-fighting system for flushing out piping and hoses with salt water.

(3) The ship's crew flushes the sewage hoses with salt water under full pressure for 10 minutes, or until the shore crew requests that the flushing be stopped. The shore crew observes the manner in which the flushing water is passing through the hose during the procedure. If a full bore discharge is not obtained, the shore crew closes the pier riser valve until a full bore flush is achieved. Flushing of the hoses can be noted by feeling hose pulsations during the operation.

(4) At the conclusion of the 10-minute period, the ship's crew secures the salt water flush aboard vessel and closes the riser valve on the ship's CHT discharge; this completes the flushing procedure.

(5) When a ship does not have the capability of flushing its discharge line and the transfer hose with salt water for a minimum of 10 minutes, the shore crew should recover the hose, connect it to the nearest salt water outlet, and flush the hose into the harbor with a full bore high pressure flush for 10 minutes.

Flushing may be carried on simultaneously for each ship-to-shore sewage hose.

b. Submarines. Normally, submarines can flush with salt water because they are usually equipped with salt water fire-fighting systems. In instances where they are not, the following steps are taken for flushing submarine sewage hoses with clean salt water:

(1) Before the hoses are disconnected, a complete air blow of each connection is made to force as much of the sewage remaining within the hoses as possible into the pier sewer.

(2) The boat's hose handling crew closes the submarine's sewage discharge riser valves, and the shore crew closes the pier sewer riser valves.

(3) The boat's crew disconnects each sewage hose from the submarine's sewage risers and aims the open end of the hose directly toward the harbor.

(4) The shore crew disconnects the shore end of the hoses from the pier sewer risers and couples each hose to the pier salt water system risers by means of adapters; the hoses should be lashed to prevent whipping. Portable fire pumps can be used to provide salt water in instances when pier salt water systems are not available.

(5) The salt water is turned on at the pier end of the hose, and each hose is backwashes full bore into the harbor for 10 minutes.

8.1.3 DRAINING. Draining takes place after completion of salt water flushing, before the valve is closed on the pier sewer riser. As much salt water as possible should be drained from the hose and into the sewer. This makes the hose lighter and easier to handle, results in a cleaner hose, and reduces the risk of spills during hose handling.

A hose which has been connected properly between the vessels and the pier should hold very little water after flushing has been completed. Draining procedures differ for hoses connected to gravity pier sewers and for those connected to pier sewers which operate under pressure. In the former case, there is no problem. However, a pier sewer which continuously or periodically operates under pressure may allow raw sewage from other ships to run back up into the hose and recontaminate it, if draining steps are not taken in proper sequence. The following procedures are carried out as specified for each condition:

a. Gravity Sewer. The hose is disconnected from the ship's riser. Low spots in the hose which hang below the pier riser are lifted progressively to an elevation above the pier riser, beginning away from the riser and moving toward it. This forces salt water in the hose to drain by gravity into the pier sewer. After draining, close the valve on the pier riser.

b. Pressure Sewer. Drain the hose in the same manner as for a gravity sewer. If it is noted that water remains in the hose from back pressure at the pier riser, the pier riser valve should be closed. A heaving line is

secured to the ship's end of the hose for passing the hose down to the pier. Because the hose contains some salt water, it may be heavy enough to require a crew of four to six men to lower it. The hose is lowered until the ship's end of the hose is low enough to permit all or a portion of the salt water to drain into the harbor. The shore crew then pulls the hose onto the pier, draining the remaining salt water into the harbor at the same time.

8.1.4 HOSE RECOVERY. Recovery steps include disconnecting. and removing the flushed sewage hoses from the vessel, capping and plugging the hoses, placing them in a transport vehicle, and transporting them off the pier to the storage area. For achievement of efficient operation and personnel safety, the steps followed for recovery of sewage hoses are just as important as those followed when the ship is connected to the sewer system. Sewage hose recovery procedures must be handled very carefully to reduce the chances of sewage spills, which can be nuisances and lead to health hazards.

The steps followed for both surface vessels and submarines in recovery of sewage hoses are so similar that both sets of instructions may be combined. The two main distinctions between recovery from surface vessels and from submarines are: (1) hoses used on submarines are smaller in diameter, lighter, and easier to handle, and (2) the shore crew rather than the ship's crew performs the salt water flushing of submarine sewage hoses. In both cases, the hose recovery begins with a hose that has been flushed and is disconnected from the vessel's sewage discharge riser.

8.1.5 RECOVERY PROCEDURES, SHIP'S CREW. The following steps are followed by the ship's crew in recovery of sewage hoses:

a. A heaving line is bent about the ship's end of the sewage hose, which has been disconnected from the closed riser.

b. The bronze dust cap over the cam-lock fitting on the ship's riser is replaced.

c. The ship's end of the sewage hose is untied from the ship's rail, stanchion, saddle, or other support.

d. The hose is handed down to the shore crew on the pier by means of the heaving line, using at least two men if the hose is empty, or at least four men if the hose contains salt flushing water. The ship's end of the hose must not be thrown down to the pier or into the harbor.

e. If the ship has more than one riser, the process is repeated until all disconnections have been made; paddles are passed to the shore crew.

8.1.6 RECOVERY PROCEDURES, SHORE CREW: In recovering hoses from vessels, the shore crew carries out the following steps:

a. <u>Power Assist Hose Reel</u>.

(1) The pier end of the hose is disconnected from the pier riser after the hose has been drained; then the riser is plugged with a bronze cam-lock dust plug.

(2) If a power reel is used, the pier end of the sewage hose is connected to the reel before the hose is handed down from the ship; as the ship's crew hands the hose down by means of the heaving line, the hose is taken up on the reel under power at the same rate. There is no need for the hose to touch the pier.

(3) If saddles are used, they are recovered from the ship's crew.

(4) The end hose on the reel is capped.

(5) When all of the sewage hoses are aboard the transport vehicle, the pier riser is double-checked to see that the valves are closed and plugged. The shore crew places other equipment, such as tools and saddles, aboard the transport vehicle, and promptly carries the hose to the storage area located away from the pier.

b. Manual Recovery.

(1) The pier end of the hose is disconnected from the pier riser and capped after draining; the riser is then plugged with a bronze cam-lock dust plug.

(2) One man grasps the pier end of the hose and pulls it out in a straight line along the pier deck as it is handed down from the ship. The other man positions himself opposite the ship's crew, guides the hose onto the deck, and feeds it to the man pulling the hose.

(3) If the hose line consists of more than one 50-foot length, couplings are detached and capped or plugged as they arrive at pier level; again, one man pulls the next section of hose in a straight line along the pier parallel to the first section, while the other man guides and feeds the hose to him. The process is repeated for all 50-foot sections of hose until all are laid out in straight, parallel lines along the pier; the heaving line is released so that it can be hauled back aboard ship by the ship's crew.

(4) If saddles have been used, they are recovered from the ship's crew.

(5) If the hose is collapsible or noncollapsible rubber sewage hose, each 50-foot length is rolled into a tight coil along the pier deck, with the male fitting at the center of the coil and the female fitting on the outside; then each coil is tied with marline and manually lifted into the hose transport vehicle by the two-man shore crew. The coils are stowed flat in the bed of the vehicle.

(6) When all of the sewage hoses are aboard the transport vehicle, the pier riser is double-checked to see that the valves are closed and plugged; the shore crew places other equipment, such as tools and saddles, aboard the transport vehicle and promptly carries the hoses to the storage area located away from the pier.

Section 2. SEWAGE SPILLS

8.2.1 CAUSES. Sewage spills on the pier are caused by the following;

a. Opening the ship's discharge riser prematurely during hose connection steps.

b. Closing the ship's discharge riser late or incompletely during hose connection steps.

c. Disconnecting the hose from a pier riser before the hose has drained completely.

d. Laying the ship's end of a hose which has not been drained completely.

e. Disconnecting the hoses by unauthorized parties at pier riser during use.

f. Failure of fittings during sewage transfer.

d. Failure of hoses during sewage transfer.

h. Dripping from inadequately supported hose fitting at pier riser during sewage transfer. This problem is not as serious as a fitting or hose failure.

8.2.2 REMEDIAL ACTION. Because sewage is a health hazard, sewage spills must be given immediate attention as soon as they are detected. The spill area should be closed off immediately to personnel other than those directly involved in corrective action. The cause of the spill should be determined and steps should be taken to stop it. If necessary, defective hoses are disconnected and replaced with hoses in good condition.

Pier sewage spills shall be flushed into the harbor with a high flow of salt water from the pier salt water riser. Disinfection of the spill area is optional. The recommended disinfectant for spills on a pier is the standard Navy stock item, dry phenolic compound. The use of chlorine HTH, dry for pier spill cleanup is not recommended because of the explosive hazard involved if the material comes in contact with oils and/or fuel on the pier. Disinfectant, germicidal and fungicidal concentrate (phenolic, dry tape), stock no. 6040-00-753-4797 comes in l-ounce pouches; use per the instructions on the pouch.

8.2.3 CLEANUP PROCEDURES. The following steps are taken in the event of a sewage spill on the pier:

a. If the shore crew is absent when a spill is detected, the discharging ship shall promptly contact the shore support duty deck to report the spill, giving the name of the ship and its berthing location; the Regional Environmental Health Officer also shall be notified.

b. If there is a large sewage leakage from the ship to the pier, the discharging CHT system is put into the holding phase. In cases where the emergency lasts for a prolonged period, the ship's discharge system can be placed in the overboard mode.

c. In the absence of the shore crew, a man from the ship's crew is stationed on the pier to guide passersby away from the spill area.

d. Upon arrival of the shore crew, one man takes over the task of guiding passersby away from the spill area; the other investigates the source of the problem, and determines what must be done immediately to cut off the sewage flow onto the pier, if it is continuing.

e. If the spill occurs while the shore crew is on the pier connecting or disconnecting a sewage hose, one man warns passersby away from the spill area. The other man investigates the source of the problem, and takes immediate action to stop the flow of sewage onto the pier.

f. When the flow of sewage onto the pier has been stopped, one man continues to warn passersby, while the other flushes down the spill area of the pier with salt water from the harbor; care should be taken to flush solids from drain gratings located in the spill area.

g. If the pier sewer riser and hose exteriors have been soiled by the spill, they should be flushed off, then washed with a detergent solution and brush.

8.2.4 OPTIONAL DISINFECTION PROCEDURE. The following steps should be taken in the event that a decision is made to disinfect the spill area:

a. After the spill area has been flushed thoroughly with salt water, the area can be disinfected in one of two ways:

(1) Dry phenolic compound solution is aspirated from a tank on the transport vehicle into salt water, which is used for flushing.

(2) The dry disinfectant is mixed in a pail of water and poured over the spill area.

b. If no disinfectant is available at the time of the spill, a liquid detergent solution may be aspirated from the tank on the truck or applied directly to the spill area for cleaning after the initial flushing.

c. After a period of at least 15 minutes (an allowance time for action by the disinfectant or detergents), the entire spill area is flushed off once again into the harbor. After the final flushing, the area may be opened for use, and the shore crew may depart.

8.2.5 HOSE FAILURES. During the above steps, it may be necessary to replace a defective hose or hoses as part of the corrective measures. The ship's CHT system should have been placed in the holding mode either before or after arrival of the shore crew. After the initial flushing of the spill area, the

shore crew drains the defective hose into the pier riser as well as possible. Then they bend a heaving line about the pier end of the hose, close the hose riser valve, disconnect the pier end of the hose from the riser, and suspend the pier end of the hose over the side of the pier, using the line. This makes it possible for the ship to flush the defective hose with salt water while the sewage spill on the pier is being cleaned up. Should the pier sewer riser be under back pressure, the procedure outlined in 8.1.3 shall be followed.

When both the sewage spill cleanup and salt water flushing of hoses have been completed, the shore crew recovers the pier end of the hose. The ship's crew disconnects the ship's end of the hose and hands it down to the shore crew via a heaving line.

As the defective hose passes from ship to pier, it may be handled by powered hose reel or by manual procedures. The ship is reconnected to the pier sewer by means of *a* sound, clean sewage hose, following the standard connection procedures. Riser valves are opened on both the ship and pier. The ship's CHT system then is placed in the pump-ashore mode, and pumping of sewage into the pier sewer is recommenced.

After cleaning the spill area and replacing the ship's leaking sewage hose(s) the shore crew departs, taking the defective hose(s) with them on the transport vehicle to the sewage hose repair area.

CHAPTER 9. SHIP-TO-SHIP DISCONNECTION

9.1 RESPONSIBILITY. Ship-to-ship disconnection is the responsibility of ships' crews unless assistance has been requested from the shore support forces.

9.2 NESTED SURFACE SHIP DISCONNECTIONS. When ships are preparing to transit restricted waters after nesting, all of the ships should be notified to secure their pumps. The outboard ship should initiate salt water flushing action to cleanse all sewage transfer piping and hoses. After flushing, disconnect the highest hose connection to allow the hoses and systems to drain. All pump discharge check valves should be held open to permit hoses to drain back into the CHT tank. After maximum draining has occurred, the rest of the hoses should be disconnected and allowed to drain thoroughly over the side. The departing ships will cap or plug their onboard hoses and pass them to the shore support forces for return to storage. The crew should double-check that deck discharge valves at both hose ends are closed prior to disconnecting hoses.

9.3 SUBMARINE TENDER-SUBMARINE DISCONNECTIONS. Submarine transfer procedures are similar to those for surface ships, except that, after the receiving station hose connections are made, submarines must obtain permission from the tender before discharging sewage to it. When possible, a complete air blow of the hoses and piping should be done before disconnecting sewage hoses to minimize spillage during disconnection procedures. The submarine air blow pressure must not exceed the hose pressure capability.

9.4 SUBMARINE HOSE FLUSHING. Submarines do not have the capability to flush their discharge lines and the shore transfer hoses. The shore support crew should connect the transfer hoses to the nearest salt water riser and flush the hose full bore into the harbor for 10 to 15 minutes to accomplish the hose flushing sequence.

9.5 SEWAGE BARGE-SURFACE SHIP DISCONNECTIONS. When the sewage barge has received its capacity of sewage the CHT system of the vessel being serviced is placed in the holding mode. Disconnection procedures then begin.

Sewage barges are not equipped with auxiliary salt water pumps for flushing their hoses. This function is performed by the ship before the barge departs. Salt water flushing of hoses" is performed by the ship as if it were at pierside. Flushing water is discharged to the barge. After flushing, hoses are disconnected and laid in the storage racks on the barge.

CHAPTER 10. UNLOADING HOSES FOR STORAGE

Section 1. UNLOADING HOSES

10.1.1 REMOVAL FOR THE TRANSPORT VEHICLE. This chapter deals with removing sewage hoses from the transport vehicle upon return to the storage area. The hoses should have been cleaned by salt water flushing as part of the disconnection procedure. BUMED policy states that the salt water flushing is adequate for cleaning the interior of the hoses. To date this has been confirmed by the testing done in San Diego. Therefore, hoses normally will be unloaded from the transport vehicle and placed directly into storage.

Sewage hoses are cleaned and disinfected upon return to the washing/storage area when it is believed that salt water flushing at the pier may not have been effective. Hoses that are found to have a strong sewage odor or those coated with grease on the inside would require additional cleansing steps. For proper disinfection/decreasing procedures, see Appendix A.

As hoses are returned to the washing/storage facility, they may be unloaded from the transport vehicle either manually or with the assistance of powered machinery. Identical procedures are used for unloading both collapsible and noncollapsible rubber hoses.

a. Collapsible and Noncollapsible Rubber Hoses To Be Washed. The steps given below are followed for manual unloading of sewage hoses brought to the yard in tight, 50-foot coils on the transport vehicle:

(1) The transport vehicle carrying the coils of rubber hose is parked as close to the wash rack or apron as possible.

(2) Both members of the two-man shore crew grasp a single 50-foot coil of rubber hose near the tailgate of the vehicle, lift it together, and carefully place it on the ground at the end of the wash rack or apron; coils of hose must not be dropped from the bed of the vehicle to the ground, as this will damage hose fittings.

(3) One man unrolls the coil of rubber hose into a straight line adjacent to the wash rack or on the washing apron;

(4) The operation is repeated until all coiled lengths of hose in the transport vehicle are unrolled in straight lines on the ground adjacent to the wash rack or on the washing apron;

(5) When the unloading operation is complete, all of the hoses will be lined up with their female couplings aligned toward the truck.

b. Power-assisted Unloading of Hoses To Be Washed. Unloading of sewage hoses with assistance from power equipment will occur mainly when the hose is carried on a trailer-mounted powered hose reel. The steps for unloading used hose from a powered hose reel are as follows:

(1) The vehicle transporting the trailer-mounted, powered hose reel is parked as close as possible to one end of the hose washing rack or

hose washing apron, with the side of the reel facing the end of the rack or apron.

(2) The outside end of the collapsible or noncollapsible rubber hose on the reel is untied, and the reel is rotated slowly under power to begin paying out the first length of hose; one member of the shore crew operates the reel.

(3) The other member of the shore crew grasps the female fitting of the first hose length as soon as it comes within his reach; then he walks away from the reel as it pays out hose, pulling the first length of hose behind him in a straight line adjacent to the washing rack or on the washing apron.

(4) When the coupling between the first and second sections of hose is off the reel and about 1 foot from the ground, the reel is stopped. The reel operator uncouples the two sections of hose and places the male fitting carefully on the ground. Then he assists the man at the head of the hose in pulling the hose length into the desired position.

(5) Both men return to the reel, and the next section of hose is removed, repeating the same steps that were used to unload the first section; at the conclusion of the operation, the second section of hose forms a straight line adjacent to the first section.

(6) The above steps are repeated until all lengths of hose have been unloaded from the reel and are laying in straight lines adjacent to the wash rack or on the washing apron.

In some instances, coils of collapsible or noncollapsible rubber sewage hoses will be carried on pallets in the bed of the transport vehicle. When the pallets of rubber hose coils are returned to the washing/storage area after use, each pallet of hoses may be unloaded from the transport vehicle with a forklift. The forklift is used to place the pallets on the ground adjacent to one end of the wash rack or wash apron. Each coil is lifted from the pallet by the two-man shore crew, set on edge, unrolled, and positioned.

Section 2. STORAGE

10.2.1 RETURN TO STORAGE. Normally, hoses should be returned to storage directly from the transport vehicle which has brought them back from the pier. For cases in which further cleaning/disinfection are required, the following discussion includes removal of clean 50-foot lengths of hose from wash rack or apron to storage.

Generally, this operation is the reverse of the steps followed in removing hoses from storage before placing them on the transport vehicle. As stated previously, hoses may be stored in a variety of ways, each one requiring its own handling procedure. Collapsible and noncollapsible rubber sewage hoses may be stored in tight coils or straight lines on the ground or in a storage rack.

a. Rubber Hoses Stored in Coils. Collapsible and noncollapsible rubber sewage hoses to be stored in coils are handled as follows:

(1) If the hose is to be taken directly from the transport vehicle, the vehicle is parked as close to the storage area as possible; both members of the two-man shore crew grasp a single 50-foot coil of rubber hose near the tailgate of the vehicle and lift it together. If the coil is to be stored on the ground, it is carried to the storage spot and deposited carefully by both men. If the coil is to be stored on a tiered storage rack, it is carried to the proper shelf by both men. Then the men slide it into place. The coil is not dropped to the ground in either case; the steps are repeated until all coils have been removed from the vehicle and placed in storage. Coiled rubber hoses may be stacked on the ground, but not more than four coils high.

(2) If the hoses are resting on the cleaning rack, all fittings are disconnected and the hoses are drained. Then each length is taken down from the rack and placed on the ground adjacent to the rack. This is done by one team member, who places one end of a length of hose carefully on the ground, then proceeds along the rack, pulling the hoses out over the edge of the rack. The other member follows along, carefully lowering the hoses onto the ground. When the entire length of rubber hose is on the ground, one man rolls it into a tight coil, with the male fitting on the exterior. The coil is then tied with marline.

(3) If the hose has been cleansed on a washing apron, it may be rolled into a tight 50-foot coil in the same manner as just described above without removing it from the washing apron.

(4) If the coiled rubber hose is to be stored on the ground, both members of the two-man shore crew grasp the coil on opposite sides, lift it, and carry it to the storage place. The coil is deposited on the storage spot without dropping it; this prevents damage to the fittings.

(5) The steps are repeated until all coils that are to be stored on the ground are in place. Coils should be stacked no more than four high.

(6) If the coils of rubber hose are to be stored on a storage rack, the two-man crew carries each coil to the rack and slides the coil onto a shelf; the process is repeated until all coils are in storage. Shelves on the rack should be no less than 12 inches apart.

(7) If the coiled rubber hose is to be stored on pallets, the pallets first are brought to the wash rack/apron area. The shore crew places two coils of rubber sewage hose on each pallet, following the same steps outlined for placing the coiled hoses in storage on the ground. A forklift is used to transport the pallets of coiled hoses to the storage area, where they are left on the pallets.

b. Hoses Stored in Straight Lines on the Ground. Both collapsible and noncollapsible rubber sewage hoses may be stored in straight lines on the ground or in storage racks. The steps listed below apply to moving collapsible and noncollapsible rubber hoses from the washing area to storage.

(1) If the hoses are to be stored on the ground, the storage area should be adjacent to the wash rack or apron. To move hoses from the washing apron to the ground storage area, one member of the shore crew lifts the end of the hose length that is closest to the storage area and carries it toward the storage area. The other member grasps the hose at a point about 10 feet from the end and moves in the same direction, pulling and carrying the hose. When the lead end of the hose is located over the storage space where it is to be placed, it is put down. Then the two men move back to the midpoint of the hose and move it over to the storage space in the same way. They move to the end of the hose remaining on the wash apron, where one man picks up the fitting and the other lifts the hose approximately 10 feet from the fitting. The two men walk the final end of the hose length to the storage area in this fashion; after the hose is placed in the storage area, the shore crew straightens it out. At the end of these steps, the 50-foot length of hose has been moved sideways out of the wash area into the storage area.

(2) To move a clean hose that is resting on a wash rack, one end of the hose is lifted off the rack by one crew member and placed carefully upon the ground. Then the two men move along the rack toward its other end, one man pulling the hose to the edge of the rack, and the other lowering it to the ground. When the opposite end of the hose is reached, the man in front grasps the fitting and lowers it carefully to the ground. The hose never should be dropped from the rack.

(3) The storage area should be adjacent to the wash rack, but not so close as to interfere with the use of the rack. After lowering a 50-foot length of clean hose to the ground from the wash rack, the shore crew moves the hose to the ground storage area, using the steps described above for moving a hose from the wash apron to the storage area. Once the entire length of the hose has been moved to the storage area, it is straightened into a neat line by the two-man crew.

(4) In both of the cases above, the steps are repeated until all of the 50-foot lengths of rubber sewage hose in the wash apron or rack have been moved to the storage area. Hoses are stored no more than one layer

deep. Open-air storage is satisfactory. In winter climates, hoses stored in straight lines on the ground may be covered by canvas to make removal and handling easier after snowfalls and during icy conditions.

c. Collapsible and Noncollapsible Rubber Hoses Stored in Straight Lines on a Rack. If hoses are cleaned on a washing apron and stored in straight lines on a storage rack, the washing apron should be close enough to the rack to simplify the moving job, but not so close as to be an obstruction or hazard. For example, the wash troughs at several hose cleaning/storage areas at NAVSTA, San Diego, are located immediately under the front of the storage rack. If more than two lengths of hose are disinfected in the wash trough in a single operation, the crew must walk on the hoses in the troughs to lift lengths into the wash rack. This is considered a potentially hazardous situation.

To move straight lengths of collapsible or noncollapsible rubber sewage hose from the washing apron to the storage rack, the following steps are taken:

(1) First, the hose is moved from the washing apron and placed in a straight line on the ground along the front of the rack. The same steps described for moving the hose from the washing rack to a ground storage area are applied.

(2) After the hose is in place in front of the rack, one member of the shore crew grasps an end fitting, raises it to the proper shelf, and places it on the shelf. Then he moves along the hose length, lifting it to the level of the shelf selected for storage. The other crew member follows, grasping the elevated portion of the hose and shoving it on the shelf as far as it will go. The two men move along the hose length, placing it on the rack in this fashion until the entire length is on the rack.

(3) The steps are repeated until all of the lengths of hose have been transferred from the wash apron to the rack. When all of the lengths of hose are in the rack, the female fittings should be at one end of the rack, and the male fittings at the other. Collapsible and noncollapsible rubber sewage hoses may be lifted as high as 5 feet, but should not be lifted manually over the heads of the personnel handling the hoses.

The above procedures also can be applied to removing hoses from washing racks and placing them on storage racks in straight lines.

CHAPTER 11. HOSE MAINTENANCE/REPAIR

Section 1. CONDITION OF HOSES

11.1.1 PURPOSE. Sewage hoses are used for conveyance and proper disposal of infectious raw sewage that must not come into contact with personnel, foodstuffs, cargo, or other materials. Raw sewage becomes a pollutant in violation of water quality standards when discharged directly into the harbor or other restricted waters. Raw sewage is obnoxious, and can lead to such nuisances as unsightliness, odors, and insect breeding if not handled properly.

Thus, the need to protect health of personnel aboard ship and onshore makes it critically important to maintain sewage hoses in top condition at all times. At the same time, meeting this responsibility will assure that water quality standards are not violated and that nuisances are not created.

The 4-inch sewage hoses are heavy and cumbersome, especially when a number of 50-foot sections are linked together. If hoses part in the handling process, there is danger of injury to personnel on the pier or on board ship. Falling hoses, particularly the heavy hose fittings, can do damage to the ship and to equipment aboard ship or on the pier. Finally, failure of hoses while in use can bring about additional damage to hoses and fittings, necessitating costly replacement or repairs.

Thus, a preventive maintenance program for ship-to-shore sewage transfer hoses is of vital importance for protecting the health of personnel, preventing water pollution, and avoiding safety hazards. Additional benefits may be realized from cost savings which result from prolonging the lives of the hoses.

1101.2 INSPECTION OF HOSES. Inspection of sewage hoses should be a continuing process. Hoses should be inspected during every major handling step that takes place: removing the hoses from storage and placing them in the transport vehicle, connecting the hoses to the vessel, disconnecting the hoses from the vessel, and during and after cleaning. The shore crew should check for loose or damaged fittings (those with cracks or other major flaws); worn, frayed, cracked, or crushed hoses; and defective gaskets. At the same time, the ship’s crew should inspect all sewage hose connections at least once each watch and report hose problems by telephone to the shore support duty desk.

If a length of hose has a flaw that cannot be repaired on the spot, it should be set aside for repair rather than placed in service. If the hose length is in service at the time the flaw is discovered, it should be flushed, disconnected, replaced, and removed for repair. The defective hose must be cleaned before it is repaired.

While sewage hose inspection is a continuous process, the best opportunity to make a detailed inspection is during the hose washing procedure. With the hose on the washing rack or apron, the shore crew can examine the cam-lock fittings at both ends of the lengths of hoses, attachment of the

fittings to the hoses, and the condition of the hoses themselves during and after the cleaning procedure. Should any damage, deterioration, or flaws be detected, the faulty hose lengths should be placed in an area separate from the active storage area to await repair. Periodic pressure testing of sewage transfer hoses at about 125 psi should be made. For hoses in regular use, pressure testing should be done once every 90 days.

Section 2. HOSE REPAIR

11.2.1 SPARE PARTS AND TOOLS. For maintenance and repair of sewage hoses, a minimum of the following materials should be kept in inventory:

a. Spare Parts

1 l/2-inch, 2 l/2-inch, and 4-inch, Male Cam–Lock Hose Fittings
1 l/2-inch, 2 l/2-inch, and 4-inch, Female Cam-Lock Hose Fittings
Levers or "Ears" for Female Cam-Lock Hose Fittings
Stainless Steel Band-It Hose Bands with Buckles
Stainless Steel Band-It Hose Banding Tape, 1.27 mm
Buckles 1.27 mm Stainless Steel
1 l/2-inch, 2 l/2-inch, and 4-inch Rubber Hoses, Collapsible and Noncollapsible
Gaskets, Rubber, 1 1/2 inch, 2 1/2 inch, and 4-inch Cam-Lock Fitting

b. Tools

Hose, Banding Machine, Band-It, Air Operated, or
Hose, Banding Machine, Band-It, Hand Operated
Band Cutter
Ten Point Hand Saw
Work Bench
Two 6-inch Pipe Vises, About 6-feet Apart Attached to Work Bench
Rubber Mallet
Ball Peen Hammer
Hot Water Bath: 12-inch Diameter x 12-inch Deep, Two Snips, Sharp Knife, Tongs, Small Pry Bar
Mandrel (for re-shaping connectors? as shown in Figure C-l, Appendix C)

11.2.2 REPAIR OF HOSES. Because of the problem of transporting bulky, 4-inch, reinforced plastic sewage hoses, it is desirable that the hose maintenance and repair shop be located at or close to a hose cleaning station. The hose repair facility may be located in the open or inside a well-lighted building. Most of the maintenance work consists of removing and replacing damaged fittings, removing and discarding worn or damaged hose sections, tightening fittings, replacing "ears," and replacing gaskets. Leaky or split hoses should not be patched, as patching is a temporary expedient, and could lead to additional sewage spill problems. Leaky or split sections should be cut from the hoses; if the remaining hose lengths are long enough to make their continued use practical, fittings should be attached, and the shorter lengths returned to service. Figure 11-1 shows hose repair procedures.

The female cam-lock hose fitting sometimes gets out of round when dropped or banged against a ship's hull or a pier curb. A very small distortion of this fitting will prevent a connection with the other hoses or risers. A

Typical Hose Leak

Heating Female Fitting and Hose for Fitting

Female Fitting Hose and Bands

Forcing Hose onto Fitting

Banding Hose to Fitting

Regrounding Female Fitting with Peen Hammer and Mandrel

FIGURE 11-1
Hose Repair Procedures

mandrel for regrounding the fitting has been developed and tested. A photograph showing its use is in Figure 11-1. Also, a shop drawing for the manufacture of the mandrel is presented in Appendix C. It is recommended that the mandrel be carried on the hose transfer vehicle, as its most emergent use occurs when a ship-to-shore operation is in process. The fittings can be regrounded within a few minutes, to permit a smooth connection operation.

It is recommended that the operator apply a red coating to hoses in need of repair. This will remind other operators not to use or deploy the bad hoses. Once a hose is repaired, the red paint can be removed by acetone or lacquer thinner.

11.2.3 INSTALLING NEW FITTINGS. To place or replace fittings on collapsible or noncollapsible rubber hoses, the following steps are taken:

a. If the hose has been in use, the ends are inspected for splits, severe compression marks, frayed areas, or any other indication of weakness; if there is any doubt about the reliability of a hose end, it is cut off before the fitting is attached.

b. To cut off a hose end, place the portion of the hose to be cut in two 6-inch pipe vises set about 6 feet apart on the work bench, as shown in Figure 11-2; when cutting off a hose end, the end of the hose to be cut is located to the outside of the pair of vises. The cutting does not take place between the vises.

c. The end of the hose is cut off by hand, using a 10-point carpenter's saw; this method produces neat, square-cut sections on rubber hoses.

d. If the hose is new, steps a. through c. may be skipped.

e. Have ready two l-gallon hot water baths large enough to heat the hose end and fittings; the water temperature should be about 200° F.

f. Place the fitting to be attached in one water bath, submerging it completely in the hot water.

g. Slip two hose clamping bands on the end of the hose to receive the fitting, sliding the bands several feet back from the hose end; place the end of the hose to receive the fitting in the other water bath in the vertical position so that it is completely immersed in hot water to the full depth of the fitting. Heat the hose end simultaneously with the fitting for a period of three minutes.

h. Remove the hose fitting from the water bath and place it on the deck with the shank facing up (caution should be used in handling the connector because it will be hot).

i. Remove the hose end from the water bath, and slip the heated end of the hose down over the shank of the heated fitting. This should require very little effort if done properly.

j. After the assembled hose and fitting have cooled, the stainless steel bands are slipped along the body of the hose into place over the shank. The end of the hose is lifted and carried to the air operated banding machine on the workshop bench, where the bands are pulled tight and secured in place.

k. If an air operated banding machine is not available, a hand operated banding machine with stainless steel banding tape is brought to the end of the hose. The end of the hose and fitting are elevated slightly above the deck onto a low work bench. Two stainless steel bands are applied and secured by hand, using the manual banding machine; generally, the air operated banding machine will do a better job.

1. If it is desirable to install a new fitting at the opposite end of the hose, the above steps may be repeated, using the opposite fitting; a new gasket should be placed inside the female hose fitting.

m. Before the hose length is removed for storage and use', it should be inspected carefully, then placed on the wash rack and tested for leaks at a hydrostatic pressure of 80 psi.

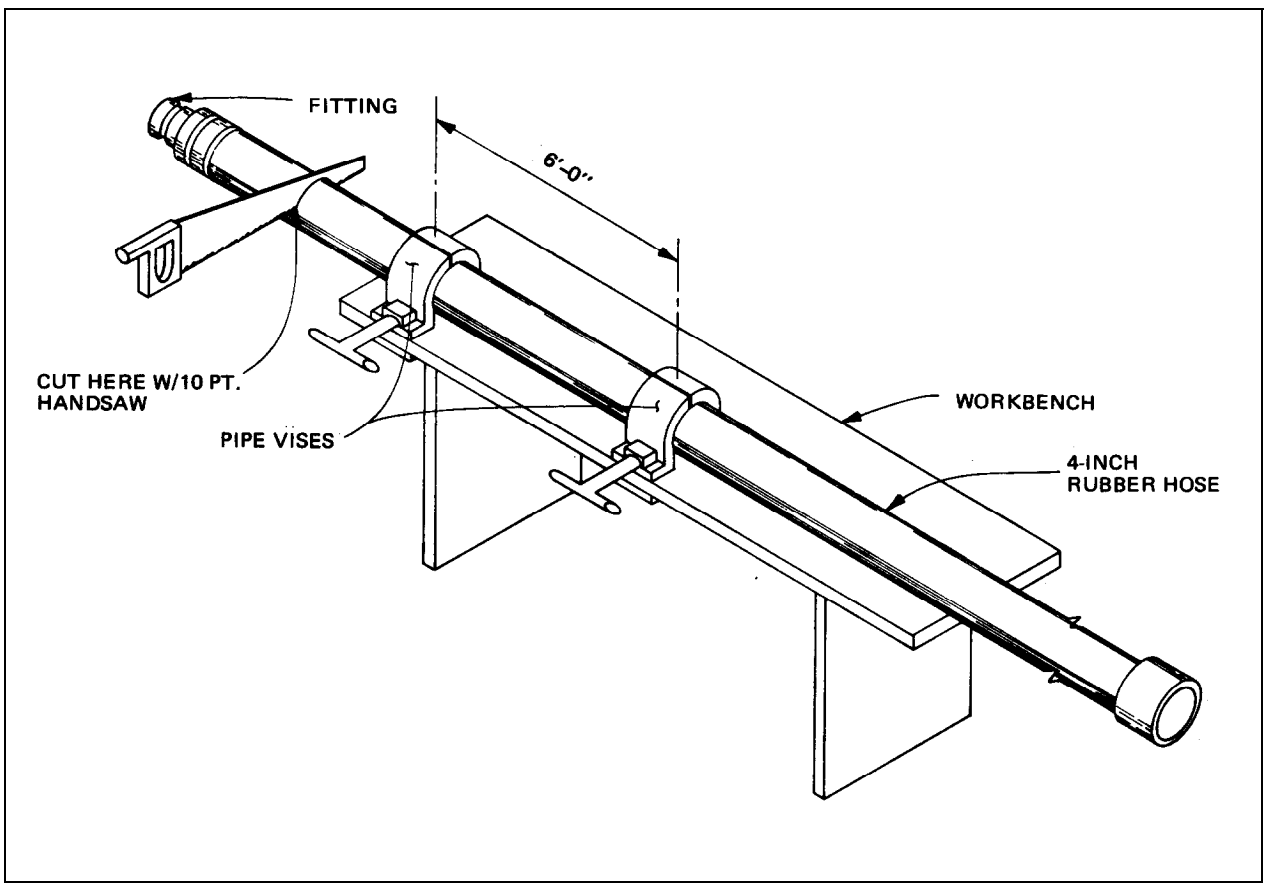

FIGURE 11-2
Work Bench Arranged for Cutting Hoses

11.2.4 REMOVING OLD FITTINGS. If a hose fitting must be replaced as a result of damage, or if the hose is damaged and part of it must be removed and discarded, the steps below should be followed:

a. Place the end of the hose from which the fitting is to be removed in two 6-inch pipe vises on the work bench. Cut off the hose to remove the fitting, using a 10-point carpenter's saw to make a neat, square cut; no more than 6 inches of hose needs to be taken off in this step.

b. Place the cut hose end with fitting on the work bench or deck and cut the hose-clamping bands with a band-cutter or snips; slip hose end off fitting.

c. If difficulty is experienced in removing the hose end from the fitting, the hose is cut off, using a sharp knife and/or snips.

d. If the fitting is not defective, it may be replaced on the hose, following the steps outlined in 11.2.3; if the fitting is faulty, a new fitting should be placed on the hose, following the steps in 11.2.3.

11.2.5 SHORT HOSE LENGTHS. Short lengths of hose created by cutting out defective sections or through other repair procedures should be fitted with couplings and saved. The use of short lengths with standard 50-foot lengths often will simplify the job of vessel connection. The optimum hose length for connecting ships to pier risers for transfer of ships' sewage is the shortest length necessary to make the connection. This same optimum length applies to ship-to-ship sewage transfer connection.

CHAPTER 12. SAFETY ASPECTS OF HOSE HANDLING

12.1 SAFETY PRACTICES AND PRECAUTIONS. The hose handling procedures discussed in this manual all have been formulated and tested with safety as an uppermost consideration. As stated in previous chapters, the raw sewage carried by the hoses is a dangerous material because of its ability to spread infectious disease. A lesser, but also important, consideration is the propensity of uncontrolled sewage discharges to pollute water, create nuisances? and support insect breeding. Thus, from the point of view of health protection, there is a definite safety element involved in the sewage hose handling program. In like manner, safety measures must be followed when ships are discharging industrial wastes to the sanitary sewer.

As stressed previously, sewage hose handling has the potential for physical hazard. Injury to the shipboard and shore personnel may occur from poorly maintained or improperly handled equipment. Personnel handling hoses can be injured by excessive stress if crews are not large enough. Separation or mishandling of hoses during connection and disconnection can cause personal injury as well as damage to the ship or equipment on the pier.

Finally, in many cases, hoses are connected to or disconnected from ships under conditions of congestion on the pier or ship. This condition may lead to accidents if due caution is not exercised.

12.2 PURPOSE. This chapter focuses attention on the physical and health safety hazards inherent in the hose handling operation. Advice will be given to assist in recognition of the hazards and in avoiding their ill effects. However, there has not yet been experience with a full-scale hose handling program. It is not likely that the following discussion will cover all - potential sources of hazard. Personnel who handle hoses are urged to be alert for hazards that may not be spelled out specifically below, and to develop their own, additional precautionary steps for the hazards.

12.3 PHYSICAL PRECAUTIONS. The 50-foot lengths of 4-inch, collapsible or noncollapsible rubber sewage hose in use for conveying sewage from surface vessels weigh approximately 130 pounds. Because of its smaller diameter, a 50-foot length of 2 l/2-inch rubber hose used for submarines weighs about 50 pounds. All have heavy metal end fittings which, if carelessly swung or dropped from a height, could do bodily injury. Parting or separation of hoses while they are in use could lead to the same result. Comparable physical damage also may be inflicted on equipment and cargo by hoses.

Other personnel safety hazards that must be faced include injury due to: excess physical exertion in handling hoses, hoses and fittings falling on shore crew members during loading and unloading, vehicular accidents on the pier, falling overboard, mangling by machinery, steam burns, electrocution, and leg injuries. The following precautions are recommended:

a. The shore crew should include at least two men, and the ship’s crew, at least three men at all times.

b. The shore crew should not connect or disconnect a vessel when, in the judgment of the shore crew leader, the ship's hose handling crew is too small.

c. When sewage hoses are being hauled aboard or let down from a ship, the shore crew must not be too small.

d. No less than two men should lift a 50-foot coil of 4-inch collapsible or noncollapsible rubber sewage hose.

e. Coils of 4-inch collapsible or noncollapsible rubber sewage hose greater than 50 feet in length should not be handled manually.

f. Coils of collapsible or noncollapsible rubber hose should be tied with marline in such a way that the exterior hose coupling does not swing free; hose lengths which are not in a good state of repair should be set aside for repair or discarded, and should not be used.

g. The shore crew should remain alert to avoid falling off the pier, or being hurt by traffic, equipment, steam, compressed air, or electricity when working at shipside.

h. When delivering or retrieving hoses by means of the portable power hose reel, the shore crew should remain alert to avoid having clothing caught on the hose or in the reel mechanism.

i. When cleaning hoses or disinfecting a sewage spill area, the shore crew should avoid getting dry phenolic compound or calcium hypochlorite (HTH) or solution in the eyes, nose, mouth, lungs, or skin; this applies to the crew and anyone in the vicinity of the operation taking place.

j. The shore crew should avoid walking on hoses at the storage area, on the cleaning apron, or on the pier, whether the hoses are in coils or straight lines. This practice can lead to leg injuries or injuries to other parts of the body by falling.

12.3.1 PRECAUTIONS FOR SHIP'S CREW. Precautionary measures that apply to the ship's crew in bringing the hoses aboard or returning hoses to the pier include the following:

a. The minimum size of a ship's hose handling crew should be three men for a vessel that does not ride high above the pier; vessel hose handling crews may consist of six or more men where the ship's sewage discharge riser is 50 feet above the pier.

b. When raising a hose to the deck by heaving line during the connection procedure, the ship's crew should be careful not to try to lift too much weight per man; overexertion may lead to personal injury. In addition, one or more members of' the ship's hose handling crew could be pulled overboard and injured, or the hose might be dropped, causing injury or damage below.

c. When returning a hose to the pier after use, a sufficient number of men must be assigned to the ship's hose handling crew, as the hose may be heavier due to entrapped water.

12.4 SANITARY PRECAUTIONS. As the function of sewage hoses is to carry raw sewage from vessels to shore for proper disposal, the interior of the hoses, their fittings, and the risers to which the hoses are attached aboard ship and on the pier are all exposed to potentially infectious material during routine use. While every contact with sewage does not mean necessarily that an individual will become ill, the potential for causing minor or major sickness is always present.

The shore hose handling crew assumes a greater risk of coming into contact with sewage or surfaces contaminated with sewage, because they handle sewage hoses on a day-to-day schedule. The groups next in likelihood for making contact are the vessels' hose handling crews, but at a lower rate of occurrence. The group least likely to come into contact with raw sewage being discharged through ship's hoses comprises the general personnel onboard ship and on the piers. However, an incident involving general personnel could involve simultaneous infection of large numbers of people.

Sanitary safety for the individual and for groups of people in handling sewage hoses and associated equipment can be assured by following the proper precautionary practices in carrying on the hose handling program. For example, the importance of keeping sewage hoses and fittings in a top state of repair at all times has been stressed in this manual. Although that warning is concerned with physical safety and program efficiency, its most urgent requirement is prevention of health hazards from sewage spills.

Similarly, a number of the steps called out as routine operations in connection, disconnection, and conveyance of sewage hoses are intended to avoid personal or public contamination. One example is the 10-minute salt water flushing of hoses before they are returned from ship to pier after use. Another example is the proper manipulation of riser valves, and the conscientious use of riser valve dust plugs and covers.

The following listing of "housekeeping," sanitary and hygienic precautions is intended to protect most personnel handling hoses and those who might come into contact with sewage through spills or other occurrences:

a. Members of shore hose handling crews should consult with their base's Regional Environmental Health Officer to determine what types of immunization are recommended. The medical officer's advice should be followed; as a minimum personnel handling sewage transfer hoses shall be inoculated for water-borne diseases.

b. Personnel who connect or disconnect sewage transfer hoses shall not subsequently handle potable water hoses. Different crews shall be used to handle potable water hoses and sewage hoses to avoid intermixing operations.

c. Members of shore hose handling crews shall wear protective clothing when disconnecting sewage hoses from ships. For routine disconnections, the

protective clothing shall consist of waterproof gloves and aprons, as a minimum; when cleaning up sewage spills, shore crew members shall wear coveralls, waterproof gloves, waterproof aprons, and rubber boots.

d. After each routine disconnection, shore crew members shall wash their hands thoroughly with soap and warm water, even though gloves are worn. After handling hoses, a hose handling crew member shall not smoke, eat, or drink before washing his hands with hot water and soap.

e. In the event that a shore crew member is wet down with sewage, he shall take a shower with warm water and soap immediately; to prepare for such occurrences, shore crew members shall carry a complete change of clothing and shoes in their personal lockers. If showering immediately is not feasible, the crew member should rinse his face and hands with potable water from a pier connection. If sewage is ingested, the crew member shall seek local medical advice for further precautionary actions. Contaminated clothing must be placed in a plastic bag for ultimate laundering in hot water and detergent; no special laundering procedures are required.

f. Every hose storage facility shall have sanitary facilities, including lockers, lavatory, stool, hot water shower, and bath towels for daily use, as well as for emergency wash-up in case of bodily contact with raw sewage or flushing water.

g. Only authorized personnel shall be permitted to handle sewage hoses. These personnel shall have received training in hose handling procedures, with emphasis on sanitary and physical safety. This rule shall be strictly applied except in the case of emergency.

h. Shore crews shall be familiar with the proper sequence of riser valve operation both on the ships and on the pier. The shore crew should advise the ship’s crew on hose connection and disconnection sequencing and riser valve operation; the ship’s crew should follow the shore crew’s advice.

i. Dust caps and dust plugs shall be used regularly on ship and pier sewer risers; sewage hoses shall have ends closed when they are transported from the pier to the hose washing/storage area. This may be accomplished satisfactorily by using plastic end cover/plugs.

j. While sewage hoses are in use, the ship’s crew should observe the hoses in operation at least once each watch, and report leaks or other problems promptly to the ship’s engineering officer, the medical department representative, and/or to the shore support duty desk.

k. Upon notification by a ship’s crew of any problem with the operation of sewage hoses, the response by the shore crew must be immediate.

1. Before sewage hoses are disconnected from surface vessels and submarines, the hoses shall be flushed with salt water for at least 10 minutes.

m. If there is reason to doubt the effectiveness of the salt water flushing upon removal to the hose washing/storage area, used hoses shall be disinfected promptly (see Appendix A for disinfection steps). No hose may

be placed in storage unless it has been subjected to the salt water flush, or if necessary, the disinfecting cycle; plastic end covers should be placed on the fittings of stored sewage hoses.

n. Sewage hoses and risers should be subject to continuous inspection by shore crews as they are being used, and defective hose lengths shall be removed promptly from the inventory of sewage hoses for repair or discard.

o. The shore crew shall have a tank of concentrated disinfecting solution and a supply of dry phenolic compound available at all times for disinfecting spill areas and handling similar emergencies.

p. Sewage spills on the pier or ship shall be cleaned up immediately; detailed instructions are found in Chapter 8, Section 2 of this manual.

q. Should it be noted that the pier sewer is malfunctioning due to clogging, electrical outage, or some other reason, the ship's crew should notify the shore support duty desk immediately; to prevent hose damage or possible sewage spills on ship or pier, the CHT system aboard ship should be placed in the holding mode until the problem is remedied. If the problem is of long duration and the ship's CHT tanks become full, the ship will have no choice but to initiate overboard discharge.

r. A record of breaks, spills, and other problems and causes, should be kept for study and development of remedial actions.

s* Sewage transfer hoses shall be clearly identified by the words, "Sewage Transfer Hose Only," stenciled in 2-inch block letters every 10 feet along the hose; handwheels and valving at shore risers shall be gold color-coded.

CHAPTER 13. COLD WEATHER CLIMATES

13.1 INTRODUCTION. As stated in Chapter 1, the procedures discussed in the preceding chapters were developed as part of an extensive study program conducted in San Diego, California. As such, the procedures were not validated for cold weather environments. The information presented in this chapter was derived from cold weather hose handling operations conducted in Norfolk, Virginia and New London, Connecticut during the 1977-78 and 1978-79 winter seasons. Direct observation of the disconnecting of frozen sewage hoses demonstrated clearly that all reasonable precautions must be taken to prevent hoses from freezing. A frozen hose, especially one containing substantial quantities of sewage, is stiff, heavy, and extremely difficult to handle, and generally requires more than the usual two-man shore hose handling team.

In addition to added safety and sanitary handling requirements, the potential for material damage to the hose, ship connection fitting, and/or shore connection station is increased. However, for reasons presented below (see 13.2), no single hose handling procedure applicable to all cold weather environments can be recommended at this time. The remainder of this chapter discusses various techniques or methods that should be considered for use in a particular situation or at a particular activity. The final selection of methods must be made by knowledgeable, experienced, on-site personnel.

13.2 COLD WEATHER EVALUATION. The wide disparity in climatic conditions, ranging from extended periods of temperatures well below freezing to periods as short as a few hours with temperatures slightly below freezing, imposes a disparity in hose freeze-prevention requirements. Additionally, the period of time a hose hookup is required must be considered. For example, ships such as tenders usually are in port for months at a time, requiring continuous hookup of sewage hoses. Conversely, some ships require only overnight hose service or service for a few days. No passive freeze-prevention-method (one requiring no additional attention or action after its installation) has been identified to provide protection in all cold weather conditions and/or periods of use. Similarly, no active freeze-prevention method (one requiring periodic personnel attention or steam, electric, or other services) can be specified, as these services are not always readily available.

13.3 HOSE HANDLING/CONNECTION/DISCONNECTION. Beginning at approximately 4° C (40° F) hose flexibility decreases noticeably as temperature decreases. When the hoses are cold, they resist changes in their physical shape and, unless restrained, tend to return to their original configurations, for example, coiled before a ship connection or laid out after a disconnection. This does not hamper handling operations seriously when a powered hose reel is used, but can be a problem during manual operations. Handling by more than two persons and restraint of the leading end of the hose may be required. Storage of coiled hose in a heated area prior to a ship connection, and transportation in an enclosed, heated truck are recommended. Adequate flushing of an installed hose immediately prior to disconnection not only will provide the required disinfection} but also will serve to raise the hose temperature, and thereby alleviate handling difficulties.

During manual disconnection of a stiff or frozen hose, a truck should be used to provide the force needed to retrieve the hose. Persons handling hoses then could concentrate on guiding the hoses and avoiding slipping on ice/snow covered piers.

13.4 PASSIVE FREEZE PROTECTION. Wherever possible, the use of passive techniques to prevent sewage hoses from freezing should be implemented. Passive techniques require minimal additional materials and provide very good protection in most freezing temperature exposures. The use of passive techniques is recommended especially for ships that do not require long-term hookups, and in ports not usually subject to prolonged periods of very cold temperatures, below about -18°C (0°F).

13.4.1 HOSE RIGGING. Hoses rigged with a continual downward slope towards the discharge end, with essentially no catenary, will be able to drain completely, thereby eliminating standing water that could freeze. No additional materials, except for spring lines in some cases, are required for this type of rigging. However, the use of nonstandard hose lengths, unusual routing between the ship and shore, and a pier connection that is not the nearest to the ship's discharge connection may be needed. The special rigging requires additional labor and time. The technique may not serve in ports having high tidal fluctuations, and is not applicable when a ship's connection is below the level of the shore connection (e.g., submarines).

13.4.2 PERIODIC SHIP PUMP-OUT. This technique is effective regardless of the method of hose rigging or relative position of hose connections. Sufficiently frequent pumping of a ship's relatively warm wastewater through sewage hoses will prevent the hoses from freezing. Personal dialogue with cognizant responsible ship personnel> supplemented by a written request/ notice is recommended to obtain positive assurance that minimum pumping requirements will be met, especially during late night hours, when both ambient temperatures and normal CHT pump-outs are usually minimal. Two methods to be considered are: 1) manual operation of CHT pumps for a stated time, such as 1 to 3 minutes on a regular, set time schedule; and, 2) the use of constant CHT tank influents, such as minimum tank washdowns or the use of garbage grinder eductor to assure sufficient wastewater volume requiring pump-out. For the 4-inch noncollapsible hoses, the required pumping frequency ranges from at least once every 4 hours for ambient temperatures down to -7° C (20° F) to at least once every hour for temperatures down to -18° c (0° F); more frequent pump-out is beneficial. For the smaller, submarine sewage hoses, the pumping frequency must be increased. This procedure requires protection such as insulation for hose ends and exposed ship and shore connection fittings, because the metal segments of the entire ship-to-shore hose hookup are more prone to freezing.

13.4.3 HOSE INSULATION. Insulation, such as flexible polyurethane closed-cell foam, can provide significant freeze protection when properly installed and maintained in good condition. There are insufficient data from field trials to present complete information for its use on all types and sizes of sewage hoses currently in use under all specific temperatures. However, based on limited field tests, insulation should be considered for use in freezing temperatures down to about -18° C (0°F), and for very long term hookups, which may occur with tender ships or housing barges. Uncovered

insulation generally is not recommended for hoses subject to chafing in service or to relatively frequent handling for connects/disconnects unless absolutely necessary. The insulation is damaged easily, and therefore requires more careful handling to avoid dragging it over abrasive surfaces and obstructions. Also, insulated hoses are bulkier and require more storage space.

13.5 ACTIVE FREEZE PREVENTION. These techniques require periodic personnel servicing and/or the positive, continuous availability of electric, steam, water, or compressed air hotel service. To date, no controlled field tests under cold weather service conditions have been conducted. Therefore, no specific recommendations relative to their use with sewage hoses can be made. The techniques are presented here for possible consideration for use in ports with extremely adverse weather, and where careful monitoring can be assured. They are in commercial use but usually require specially designed and engineered equipment and trained personnel.

13.5.1 HEAT TRACING. This technique normally is used in conjunction with insulation. Either self-temperature-regulating electric heat tape or steam jacketing provides the heat needed to compensate for the heat lost to the atmosphere. The technique is very effective in any climate but consumes energy, requires careful installation, and usually needs a source of well-regulated steam or electricity to prevent overheating. However, where shore steam normally is provided to a ship, the possibility of tying or wrapping together the steam supply line and sewage discharge hose(s) could be considered.

13.5.2 AIR PURGE. After every pump-out and periodically or continuously between pump-outs, compressed air purging of the hose can be used to force out most residual wastewater, and to prevent any remaining water from pooling and blocking the line if it freezes. This technique requires a modification to the sewage hose inlet connection. It is not always effective, as compressed air lines themselves often freeze during cold weather, due to the presence of condensed moisture.

13.5.3 CONTINUOUS FLOW. A continuous flow of steam, steam condensate, or water through a sewage hose between periods of wastewater pumping would prevent freezing by providing both the addition of heat and fluid movement. Implementation of this technique requires ship discharge station modifications to prevent sewage contamination of the supply lines for the purging medium. The technique also increases the hydraulic load on shore receiving/treatment facilities. Additional costs are required to supply and treat the added fluid.

APPENDIX A

SEWAGE TRANSFER HOSE DISINFECTION PROCEDURES

A.1 OPTIONAL DISINFECTION PROCEDURES. As discussed in the text, the 10-minute flushing with salt water usually will be sufficient to clean the sewage hoses. However, if a strong sewage odor persists after the 10-minute flush, additional cleaning is required. The first step in providing additional cleaning is to connect the hose to the pier salt water system and flush the hose over the side for an additional 10 to 20 minutes.

If a strong odor remains after the second flushing, additional cleaning and disinfection of the hoses should be carried out at the hose storage and cleaning facility. The procedure will take place either on a wash rack or a wash apron (see Section 3.3.2 and Figures 3-14, 3-15, and 3-16). The recommended disinfectant for this procedure is commercial grade calcium hypochlorite (HTH). This material should be used only in the hose cleaning and storage area, and should not be permitted to come into contact with fuels, oils, or grease because of its oxidizing characteristic.

Equipment and materials for cleaning and disinfecting hoses include the following:

- Chlorine Solution
- Chlorine Powder (HTH)
- Detergent Solution
- Hot Water Tank
- Chlorine Solution Tank with Aspirator
- Reduced Pressure Principle Backflow Prevention Device
- Chlorine Residual Comparator or Precision Test Paper Manufactured by Wyandotte Chemical Corp., Wyandotte, Michigan 48193
- Fresh Water

Experience shows that flushing with fresh water is relatively ineffectual and cleaning by this means cannot be assured. Fresh water is used only when disinfecting with chlorine (HTH), or for washing with detergent. Fresh water is admitted to the hose inlet manifold only through a reduced pressure principle backflow prevention device.

The cleaning procedure begins with used hoses laying in straight lines adjacent to the hose cleaning rack or on the hose washing apron. The steps listed below are then followed (see Figure A-l):

a. If the cleaning will take place on the washing rack, the number of hoses that can be accommodated are placed upon the rack; to do this, both members of the shore crew proceed to the end of the hose length that is closest to the head end of the rack. They lift the end onto the rack and connect it with the inlet manifold at that end. Then the two men move along the length of the hose, one man lifting and one man adjusting the hose on the rack; when they reach the opposite end, they pick up the fitting at that end and attach it to a U-bend with a hose adapter. Next, they pick up the

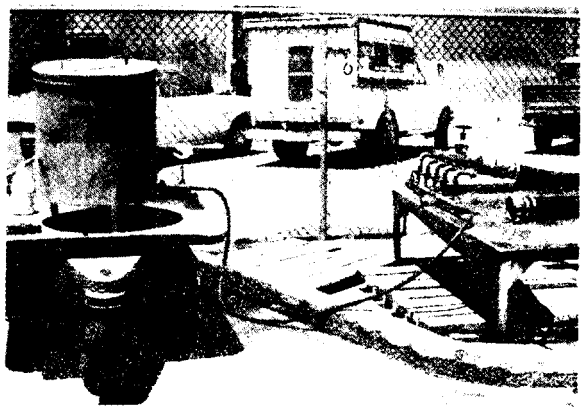

Chlorine Solution Mixing Tank

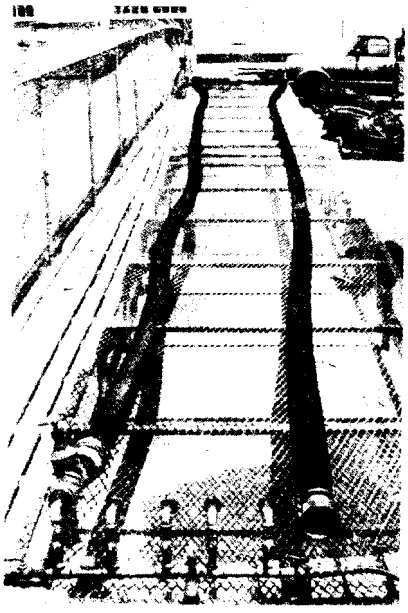

Two Hoses Connected on Rack for Disinfection

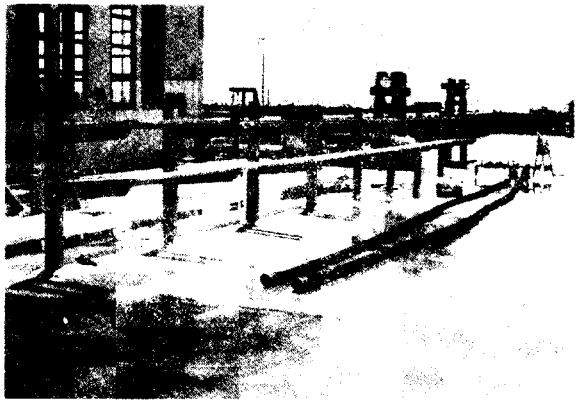

Two Sewage Hoses on Washing Apron

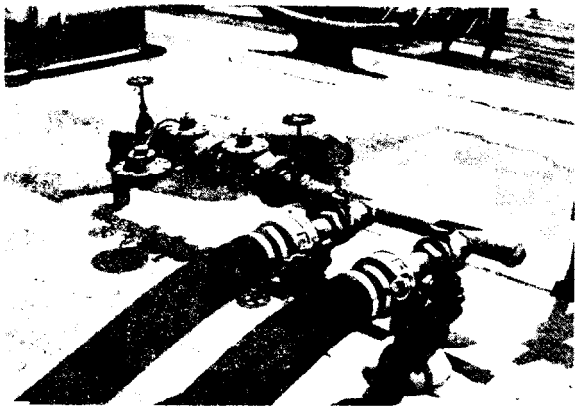

Hoses Connected to Manifold on Washing Apron

FIGURE A-1
Sewage Hose Disinfection Procedures

end of the next section of hose near the rack, attach it to the other side of the U-bend and proceed back along the rack in the opposite direction, lifting that length of hose and adjusting it in place; when the second length of hose is completely upon the rack, it is attached to the outlet manifold at the head end of the rack, forming a continuous loop of two 50-foot lengths on the rack. The steps are repeated until the capacity, of the rack is reached or until all connections have been made to the inlet and outlet manifolds.

b. If the hoses are to be cleaned on an apron, their end fittings are attached to the inlet and outlet manifolds, forming loops by using U-bends at the far end of the apron as described for the wash rack above. If the washing apron is in the form of a wash trough located approximately 1 foot from the hose storage rack, no more than two 50-foot lengths of hose should be washed in the trough at one time, to prevent injury to personnel who might walk on hoses when lifting lengths into storage on the rack.

c. The hoses should be flushed for two minutes with clear salt water if available at the rack or apron, or with fresh water.

d. Following the two minute flush, a solution of calcium hypochlorite (HTH) in fresh water is admitted to the hose lengths via the inlet manifold; the disinfectant solution is mixed to contain one ounce of HTH powder per 50-foot length of hose. The chlorine solution is withdrawn from its tank by means of an eductor in the fresh water supply line.

e. The disinfectant solution is left in the hoses for the 20 to 30 minutes required for disinfection. A small portion of the water in each hose length is tested for chlorine residual at the end of the holding period; if a residual exists, it is assumed that the hose has been disinfected. The hose lengths then are drained to the sewer and flushed briefly with potable water. After the flushing, the shore crew makes sure that each section of hose has been drained properly. Then, a plastic dust cap is placed over the male end, and a plastic dust plug is inserted into the female end of each hose.

f. In cases where the chlorine test does not show a residual, it should be assumed that there is a grease or possible pathogenic bacteria buildup inside the hose length; the hose length is then cleaned internally with detergent and flushed out. Chlorine solution is added as before; after the 20- to 30-minute contact period, the water within each hose length is tested again for chlorine residual. If a chlorine residual exists, it can be assumed that the hose has been disinfected; if no residual is found, the detergent cleaning, flushing, and chlorinating steps are repeated until a residual is obtained.

During the above cleaning procedures, the shore crew inspects each length of hose for wear, damage, flaws, and malfunctions. Defective hoses are set aside for repair or discard after they have been cleaned. When the above steps have been completed the individual 50-foot lengths of hose are clean and ready for storage.

Experience at San Diego to date has not shown a great accumulation in any of the sewage transfer hoses. However, grease buildup problems experienced in ships' CHT systems provide grounds for the assumption that, at some point in time, grease accumulation with resultant resistive contamination can be anticipated in the ships' hoses. Continuing work will be carried out to establish improved cleaning and decreasing procedures for contaminated sewage transfer hoses.

A.2 DECREASING SHIP-TO-SHORE SEWAGE HOSES. When hoses are disconnected from a ship after a 10-minute salt water flush and a grease buildup is noted in the hose, a decreasing procedure should be carried out. A standard procedure for cleaning grease from pipes in a sewage collection system or at a treatment plant is to charge the lines with a live stream. This procedure was performed on a ship-to-shore sewage hose that had been connected to a submarine tender for a continuous period of 7 months. There was no heavy buildup of grease in the hose, but a thin black film was noted. The hose was connected to a 11/2-inch steam outlet which had a static pressure of 100 psi; the valve was cracked to permit full inflation of the collapsible rubber hose. The steam was allowed to flow through the hose for 10 minutes, and a film of grease was observed on the condensate flowing from the inverted end of the hose. The temperature of the 50-foot hose coupling furthermost from the riser was only slightly lower than the temperature of the riser. There was no apparent damage to the hose, and it withstood a 100 psi hydraulic test after the decreasing sequence.

For decreasing a sewage hose, the same layout as for hose disinfection should be followed. The steam should be passed through the hose as described above, and a bucket should be placed at the lower end of the hose to collect the dislodged and melted grease for disposal in a landfill qualified to receive this type of material. After decreasing is completed the hose should be disinfected as described in Section 1 of this appendix before being placed in storage.

APPENDIX B

LESSONS LEARNED, EXPERIENCES, AND TESTING

B.1 Old tire rims can be used for saddles to support and guide rubber hoses on ships and piers, to prevent kinking and chafing.

B.2 Where hoses come in contact with abrasive material and may be worn by chafing, the hoses should be protected by a shield cut from an old length of hose.

B.3 Dripping of sewage at the ship deck riser can be prevented or corrected by use of a saddle located about 4 feet from the deck riser, to carry the weight of the hose and relieve strain on the cam-lock coupling.

B.4 If more than two hose lengths are required for a ship connection couple hoses prior to passing them to the ship.

B.5 Always have the shore end of the hose secured to a pier fixture to avoid loss of the hose over the side by the ship's crew.

B.6 During AFFF testing, the fire-fighting fluid is diluted 94 percent and can be discharged to a barrel with an attached sewage hose, so that the AFF fluid may be discharged to the sanitary sewer. Boiler cleaning agents (weak acids) may be discharged in the same way. Discharges of ship-generated industrial wastes to the pier sewage collection systems, shall be cleared with the shore support activity on a case-by-case basis.

B.7 Nearly all submarines and some ships cannot flush their lines and the connecting hoses with salt water. After disconnection from the vessels, these hoses should be connected to the nearest salt water line on the pier and flushed with salt water into the harbor for 10 to 15 minutes. This will prevent having to coil and handle contaminated hoses, and also will eliminate one uncoil-coil operation.

B.8 Salt water flushing should clean ships' hoses adequately, making it unnecessary to uncoil the hose for washing at the storage area and then recoil it for storage.

B.9 Ship-to-shore connections should be made with the shortest possible length of hose. This cuts down on pulsating and pounding problems. Use of short lengths of hose from repair operations will facilitate this procedure.

B.10 Lead hoses from ship to shore on a spring line to minimize a heavy loop filled with water between ship and shore.

B.11 Each activity responsible for operating shore sewage collection systems should make a salt water flow test of each pier section accepted from a construction contractor prior to use for the collection and transfer of ship generated raw sewage.

a. Two pier sewer systems accepted in San Diego had blockage problems. One pier main was unable to carry the sewage flow from an AS and a submarine at the same time. An investigation found five 5-gallon cans of extraneous debris left in the main by the contractor. A pier recently accepted from a contractor was given a salt water flow test. The salt water backed up in a manhole on the system and overflowed into the street. It was found that the contractor failed to remove a blank that was put on the main to the lift station incident to an air test required in the contract specifications.

b. A salt water test was made on a pressure manifold section of a pier sewer accepted from a contractor. It was found that the salt water pressurized all outlets on the pier connected to the manifold. Standard Operating Procedures (SOP) were established to assure that sewage spills will not occur on this pier when disconnecting sewage hoses from the pier risers.

B.12 Several test sequences were conducted to evaluate hose cleaning techniques.

a. AS-12: contaminated hose, salt water flush, 2 l/2-inch main at 90 psi 23 November 76.

	Time of Flush	Total Coliform Count
Test #1	5 min.	150,000/100 ml
Test #2	10 min., same hose	6,000/100 ml
Test #3	15 min., same hose	50,000/100 ml
Test #4	20 min., same hose	30,000/100 ml
Test #5	Salt water background	300/100 ml

b. AS-12 : contaminated hose, salt water flush, 2 l/2-inch main at 90 psi 17 November 76:

	Time of Flush	Total Coliform Count
Test #1	5 min.	12,000/100 ml
Test #2	10 min.	1,000/100 ml
Test #3	15 min.	300/100 ml
Test #4	20 min.	80/100 ml
Test #5	25 min.	0/100 ml
Test #6	30 min.	>300/100 ml
Test #7	Salt water background	300/100 ml

c. A series of tests were made on hoses contaminated by submarines; the hoses serving black water and/or gray water tanks are so indicated.

Test #1: Flush with potable water l-inch source 80 psi, hose #1, black water.

Time of Flush	Total Coliform Count
10 min.	8,000/100 ml
15 min., same hose	6,400/100 ml

Test #2: Chlorination contact 200/100 ml with 5 min. potable water, flush hose #2, black water, 20/100 ml.

Test #3: Salt water flush, 2 l/2-inch main at 90 psi, hose #3, gray water, 10 min. flush = to >10,000/100 ml total coliform count.

Test #4: Salt water flush, 2 l/2-inch main at 90 psi, hose #4, black water, 10 min. flush 350/100 ml coliform count. Salt water background 400/100 ml total coliform count.

Test #5: Salt water flush, 2 l/2-inch main at 90 psi, hose #5, gray water, 10 min. flush 4,000/100 ml total coliform count. Same hose with chlorine contact potable water with 200/100 ml with 5 min. salt water flush = > 10/100 ml total coliform count.

Test #6: Salt water flush, 2 l/2-inch main at 90 psi, hose #6, gray water, 10 min. flush 30,000/100 ml total coliform count. Same hose 10 min. standard stock detergent contact 2,000/100 ml total coliform count.

Test #7: Salt water flush, 2 l/2-inch main at 90 psi, hose #7, gray-black water, 10 min. flush 2,200/100 ml total coliform count.

Test #8: Chlorine contact potable water with 200/100 ml, 10 min., hose #8, gray-black water, 500/100 ml total coliform count. Chlorine residual in drain water 75 ml.

B.13 HOSE PULSATION EXPERIENCE WITH THE COLLAPSIBLE RUBBER HOSE MIL-H-20176B. It was noted that at times severe pulsation action took place in the hoses hooked up regularly to the two AS tenders at the Navy submarine support facility. The rubber hose on the AS-37 was replaced with a plastic hose and the pulsation problem was overcome. On the AS-12 the pier riser valve was closed 30 percent, which produced a 5 psi reading at the pier riser. This resulted in a full hose flow approximately two-thirds the height of the hose up to the ship riser. The pulsations were reduced to a small quiver.

a. The pulsations are undesirable because they occur on the pier near the pier riser, causing abrasion at points where the hose is in contact with the pier curb and/or fender system.

b. The flow meters on each ship indicated the average flow: AS-12, 250-700 gal/rein; As-37, 250-300 gal/rein during pumping cycles.

c. To further study the pulsation, problem tests were conducted on a gravity pier sewer (Pier 4) and a pressure manifold pier sewer (Pier 5) at the Naval Station, San Diego, and from a salt water line 40 feet above Pier 5 aboard the AD-15. The test results are as follows:

Test #1: Pier 4 NAVSTA Gravity Line
Salt Water to Sewer
Horizontal Layout
Pressure on Supply Line, 80 psi

(1) Full open pier riser, active pulsation; hose not completely full, pressure gauge at pier riser 0 psi.

(2) Closed pier riser valve 50 percent; hose became completely full, no pulsation, gauge at pier riser 5 psi.

Test #2: Pier 5 NAVSTA Pressure Manifold
Salt Water to Sewer
Horizontal Layout
Pressure on Supply Line, 90 psi

(1) Full open pier riser, no pulsation; hose completely full, pressure gauge at pier riser 30 psi.

(2) Full open pier riser; reduced salt water flow to give pier riser gauge 5 psi, no pulsation.

(3) Full open pier riser; reduced salt water flow to give pier riser gauge 0 psi. Very slow throb pulsation in hose next to pier riser connection; hose was not full bore.

(4) Cut salt water flow again and pulsation stopped; hose was not full bore.

Test #3: Pier 5 NAVSTA Pressure Manifold
Salt Water Line Aboard AS-15
Approximately 35 feet above pier
Pressure Supply Line, 50 psi

(1) Full open pier riser, active pulsation; hose not completely full, pressure gauge at pier riser, 0 psi.

(2) Closed pier riser 50 percent; hose became full approximately 90 percent of the hose up to the ship connection. The pulsations stopped; gauge at pier riser, 9 psi.

B.14 Because of the dearth of ships in San Diego that have been certified to operate their CHT systems, simulated exercises were carried out to identify problems that might-be encountered in connecting ships' deck risers to pier sewer risers using the 4-inch transfer hoses. The test results are as follows :

a. FFG-1: Two hoses; ship crew, three men; shore crew, two men; no problems.

b. LPD-7: One hose; ship crew, three men; shore crew, two men; hose lifted 30 feet above pier; no problems.

c. ATF-101: One hose; ship crew, three men; shore crew, two men; ship deck same as pier level; no problems.

d. GG-9: Two hoses; ship crew, three men; shore crew, two men; ship deck 15 feet above pier; no problems.

e. LKA-115: One hose; ship crew, three men; shore crew, two men; ship deck 20 feet above pier; no problems.

f. LPH-10: Six hoses; ship crew, four men; shore crew, two men; ship deck 40 feet above pier; no problems.

B.15 Experience to date on the transfer of ships' sewage or salt water using CHT systems and pier sewer systems in San Diego is as follows:

a. AS-37: period of sewage transfer service - several years; required one hose; ship handling crew, three men; shore crew, two men; ship riser 20 feet above pier; hose requires saddles; ship uses DBC's (Dry Bacteria Cultures) for grease control; sewage flow 250-300 gal/rein; O psi pressure at pier riser; pulsations noted using MIL-H-20176 hose. No other problems.

b. AS-12: period of sewage transfer service - one year; required one hose; ship handling crew, three men; shore crew, two men; ship riser 30 feet above pier; hose requires saddles; ship does not use DBC's; sewage flow 250-700 gal/rein; O psi pressure with pier valve full open; 5 psi with pier valve closed 30 percent to control pulsations. No other problems.

C. ASR-7: period of salt water transfer service - 2 hours; required one hose; ship handling crew, three men; shore crew, two men; ship riser below pier level; hose required saddles; O psi pressure of pier riser; no pulsations as hose flowed full because of ship riser elevation. No problems.

d. LST-1184: period of sewage transfer service - 1 day; required three hoses; ship handling crew, three men; shore crew, two men; ship risers 20 feet above pier; hose saddles required; pulsations noted using MT.L-H-20176 hose; O psi pressure at pier riser. No other problems.

e. LHA-1: period of sewage transfer service from riser on aft sponsor-1 hour; two hoses required for this operation; ship riser 50 feet above pier level; ship handling crew, four men; shore crew; two men; hose saddles required; severe pulsations using MIL-H-20176 hose, O psi pressure at pier riser. No other problems. Simulated connections made to mid ship and forward deck risers; height above pier 30 feet; required two hoses; ship's crew, three men; shore crew, two men.

f. SS-572, SS-565, and SS-566 nested and hooked up at the same time; period of sewage transfer service, 3 to 10 days, periodically when in port. First submarine next to pier, three deck risers, four hoses; second submarine from pier, six hoses; third submarine from pier, nine hoses; submarine risers below pier level, no saddles required; submarine hose crew, two men; shore crew, two men; no problems.

g. SSN-592 and SN-596 nested and hooked up at the same time. Experience same as for SS units above.

B.16 An air operated hose-banding machine bands hoses to fittings more securely than a hand operated machine.

B.17 Two bands rather than three can band hoses and fittings securely.

B.18 For storage of coiled sewage hoses on shelves, the shelves should have a minimum 12-inch clearance for their entire depth.

B.19 Locating a hose washing trough immediately in front of a hose storage rack should be avoided, as it can lead to accidents and injury. Where this has already been done at San Diego, no more than two hose lengths should be washed in the trough at a time, to minimize the risk of accident.

B.20 It was observed in some ship-to-shore sewage connections that large accumulations of residual water were present in the hoses, such as in a catenary between a ship and the pier, or when a ship's deck riser was lower than the pier riser to which the ship was connected. Purging of the water by compressed air was accomplished by installing a half-inch, valved nipple in the female hose coupling that connects to the ship sewage deck riser. The ship riser valve was closed and the air pressure applied to hoses for 30 seconds. The compressed air purged the hose almost totally. This technique is used regularly where a ship-to-shore connection could result in a drain back spill on a ship's deck during a disconnection operation.

B.21 In passing sewage hoses to submarines that are outboard in nested berths, be sure that a metal cap is in place in the hose being passed. This permits flotation of the total hose and makes for an easier hose transfer operation.

APPENDIX C

MANDREL
STRAIGHTENIG HOSE FITTINGS

MANDREL FOR HOSE SIZE FITTING	DIMENSION (INCHES)			
	A	B	C	D
4-INCH HOSE	4 23/32	2 3/4	1 3/4	3/8
2 1/2-INCH HOSE	3	2 1/4	1 3/8	1/2
1 1/2-INCH HOSE	2 1/8	1 3/4	1 3/8	1/2

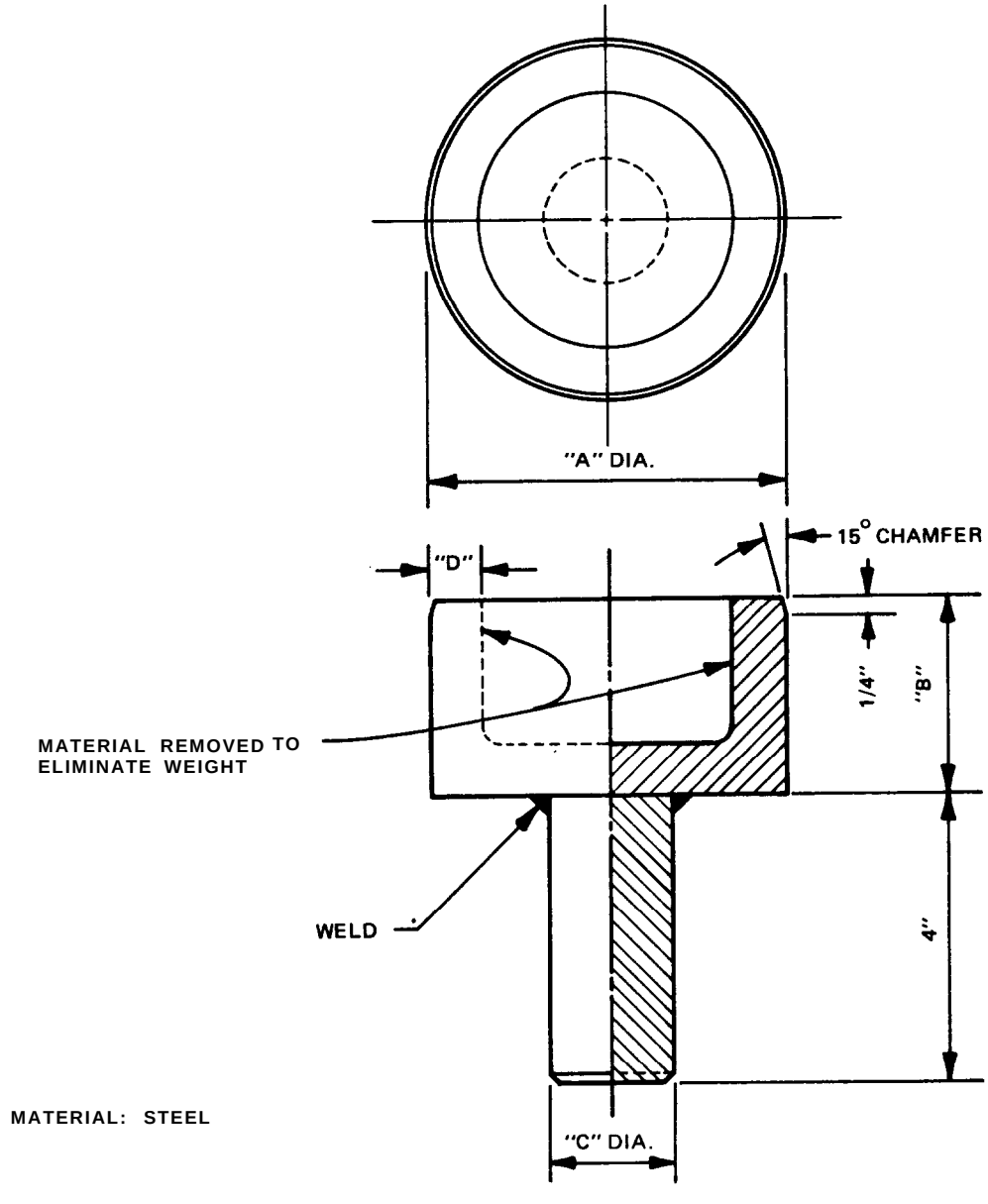

MATERIAL: STEEL

REFERENCES

(Publications containing criteria cited in this manual)

DOD Directive 6050.4, Marine Sanitation Devices for Vessels Owned or Operated by the Department of Defense

Environmental Protection Agency 40 CFR 140

Federal Water Pollution Control Act Amendments, Section 312

MIL-C-27487

MIL-H-20176A

MIL-H-20176B

MIL-H-20176C

MIL-H-20176D

Secretary of the Navy Instruction 5600.16

U.S. Coast Guard 33 CFR 159

INDEX

Apron, Hose Washing 3-21

Barges, Offloading 2-13
(Also see SWOB Barges)
Berthing Arrangement 2-9

Calcium Hypochlorite,
Use of A-1
Certification Program 2-8
Chlorine Solution,
Preparation A-2
CHT Systems, Discussion 2-2
Cleaning, Hoses and
Areas 3-19
Cleanup Procedures,
Spills 8-5
Clothing, Protective 5-3
Coil Storage 4-3
Cold Weather Evaluation 13-1
Coliform Count 13-2
Collection, Holding and
Transfer (CHT) Systems 2-2
Comminutor System 2-2
Connections, Ship-to-
Shore 6-1, 6-3, 7-1
Covers, Hose Ends 3-1
Cranes, Shipboard,
Use of 7-8
Crew Size 4-1
Crew Tasks
Recovery procedures 8-3
Ship's crew 7-5
Shore crew 7-4
Submarines 6-6
Surface vessel 6-2, 7-4
Cruisers, Nested
Connections 7-1
Cutting Hoses 11-5

Decreasing A-4
Discharge Hose,
Diagram 3-6
Discharge Rates 2-6
Disconnection Procedures 8-1, 9-1
Disinfection Procedure 1-1, 8-6,
10-3, 12-2, 12-4, A-1

DOD Directive 6050.4 1-1
Draining, Hoses 8-2
Dry Phenolic Compound 8-6

Failures, Hoses 8-6
Fittings, Hose Couplers 11-5
Flushing Procedures 8-1

Gravity Collection Systems . . 2-9
Gravity Sewer, Hose
Draining 8-2

Hardware 3-1
Hazards, Hose Handling 12-1
Hoses
Cleaning racks 3-20
Couplings 3-2
Decreasing A-4
Disinfection 1-1. 10-3, 8-6,
12-2, 12-4, A-1
Draining 8-2
Experience review B-1
Failures, of 8-6
Flushing A-3
Handling procedures 4-1, 4-3
Hardware, sewage hose 3-1
Identification, marking . . . 12-5
Loading 4-1
Power loading 4-3
Procurement, of 3-1
Pulsation problems, in B-3
Recovery procedures 8-3
Repair and maintenance of . 11-1,
11-3, c-1
Safety, in handling 12-1
Service craft, hose size . . 3-16
Sizes 3-2, 7-4
Spares and tools, for 11-3
Specification development . 3-2
Storage . . . 3-19, 3-22, 3-23, 4-1,
4-3, l0-1
Submarines, hoses 6-6
Surface ships, hoses 6-2
Transport, hoses 5-1
Unloading for storage . . . 10-1
Washing 10-1

Inspection, Hoses 7-8, 11-1
Installation, Hose Fittings . 11-5

JERED Vacu-Burn System 2-7

Kinking, in Hoses 3-1

Legal Requirements 1-1
Location, Support Facilities. 3-19

Maintenance, Hoses 11-1
Mandrel, Fitting Repair C-1
Manual Loading 4-1
Manual Recovery, Hoses 8-4
Marine Sanitation Devices . . . 2-3

Nested Ships, Connections . . . 7-1

Partial Pressure Collection
System 2-9
Parts Inventory 11-3
Pier Piping, Pressure
Manifold . . . . . .-2-9-
Pier Sewer Risers 2-9, 2-12
Plastic Hose
Limitations 3-2
Repair 11-3. 11-7
Storage 4-3, 10-3
Washing 3-11, 10-1,
A-1
Portable Equipment 5-3
Power Assist Loading 4-3
(Also see Powered Hose Reel)
powered Hose Reel 4-3. 8-3, 5-3,
Pressure Manifold, Concept . . 2-9
Pressure Sewer, Hose
Draining 8-2, 8-3
Procurement Agent, Hoses 3-1
Protective Clothing 5-3
Public Law 92-500 1-1
Pulsation Problems, Hoses . . . B-3
Pumps 2-3

Racks, Hose Cleaning 3-20
Regulations, (33-CFR-159,
40-CFR-140) 1-1

Remedial Action, Spills . . 8-5
Repair, Hoses 11-1
Reporting Required, Spills . 8-5
Residual Water Problem B-6
Rubber-Based Hose
Limitations 3-1
Pulsation problems B-3
Repair 11-1, 11-3, C-1
Storage . . . 3-19, 3-22, 3-23, 4-1,
4-3, l0-l
Washing 10-1

Saddles, Hose Support 7-6
Safety, Hose Handling 12-1
Sanitary Precautions 12-3
Ship-to-Ship Connection 7-1
Ship-to-Shore Connection 6-1
Shore Collection System 2-9
Shore Furnished Hose 6-2
Short Hoses, Use of 11-7
Sizes, Hoses 3-2, 7-4
Spills, Sewage 8-5
Storage, Hoses 3-19, 3-22, 3-23,
4-1, 4-3, 10-l
Strainer System 2-2
Submarines
Crew tasks 6-6
Hose flush 8-2
Hoses, for 3-11
Sewer connection 6-6
Tender, connection to 7-11
Tender, disconnection to . . 9-1
SWOB Barges,
Use of 2-13. 7-12, 9-1

Temperature Problems 13-1
Testing B-1
Tools, Hose Repair 11-3

Unloading Hose, Storage 10-1

Vehicles, Hose Transport 5-1

Wash Rack, Hoses 3-20
Weight, Hoses 12-1

*U S GOVERNMENT PRINTING OFFICE 1980 -628-044/2537