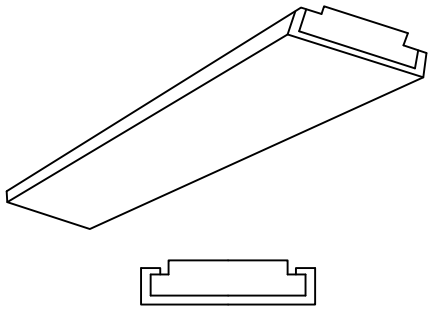

LUMINAIRE REQUIREMENTS

1. 0.8mm MIN. THICKNESS FORMED STEEL HOUSING. CHEMICAL TREATMENT FOR RUST PREVENTION. BAKED WHITE ENAMEL FINISH. 85% MIN. REFLECTANCE (INTERIOR). ENTIRE HOUSING SHALL BE PAINTED WHITE, AFTER FABRICATION. HOUSING SHALL NOT PERMANENTLY DEFORM NOR SHALL IT DEFLECT MORE THAN 25mm (50mm FOR TYPE B) WHEN LIFTED BY ONE CORNER.

2. SECURE HOUSING ENDS BY RIVETS OR SCREWS. PROVIDE A KNOCKOUT IN EACH END AND TWO IN TOP OF HOUSING. HOUSING SHALL HAVE INTERNAL GREEN GROUNDING SCREW.

3. OVERALL LUMINAIRE LENGTH SHALL BE 1220mm NOMINAL. OVERALL WIDTH SHALL BE 260mm MINIMUM FOR 2 LAMP, 390mm MINIMUM FOR 4 LAMP. OVERALL HEIGHT SHALL BE 89mm MAXIMUM.

4. LENS SHALL BE CLEAR 100% ACRYLIC HAVING A MINIMUM OVERALL (BOTTOM OF LENS) THICKNESS OF 3.5mm WITH A MAXIMUM PRISM PENETRATION DEPTH OF 1.8mm (1.4mm MIN. OVERALL SIDE THICKNESS).

5. LENS SHALL BE PRISMATIC TYPE, INJECTION MOLDED INTO A SINGLE 5-SIDED UNIT WITH 15mm MINIMUM RE-ENTRANT FLANGE ON EACH LONG SIDE FOR ADDITIONAL STRENGTH.

6. LENS SHALL BE CAPABLE OF HINGING AND LATCHING FROM EITHER SIDE OF FIXTURE.

7. BALLAST: HIGH POWER FACTOR ( $\geq$ .95) INSTANT START CLASS P ELECTRONIC BALLAST WITH SOUND RATING OF "A". SECURE BALLASTS TO HOUSING WITH AT LEAST ONE SCREW AND SLIP ON BRACKET OR TWO SCREWS - ONE AT EACH END.

8. PHOTOMETRICS: MINIMUM COEFFICIENT OF UTILIZATION (CU) FOR THE FOLLOWING CAVITY REFLECTANCES: CEILING = 80% WALL = 50% FLOOR = 20%

| | | TYPE A | TYPE B |
|---|---|---|---|
| RCR = 1 | CU = | 69 | 66 |
| 2 | | 62 | 59 |
| 3 | | 56 | 53 |
| 4 | | 50 | 48 |

9. MINIMUM SPACING CRITERIA: 1.3

TYPE A - 2 F32/T8 LAMPS
TYPE B - 4 F32/T8 LAMPS

SURFACE MOUNTED WRAP-AROUND LUMINAIRE
FOR PREMIUM OFFICE/CLASSROOM TYPE SPACES

| SKETCH DATE NOVEMBER 1995 | STYLE | NL-1 |
|---|---|---|

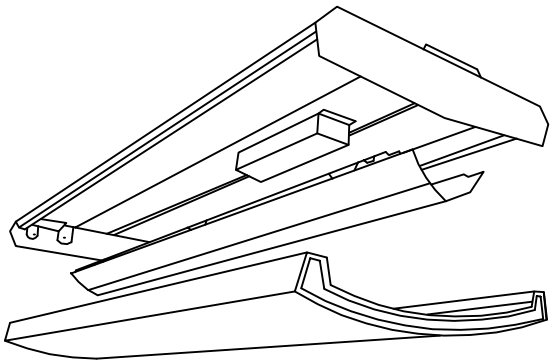

LUMINAIRE REQUIREMENTS

1. 0.6mm MIN. THICKNESS FORMED STEEL HOUSING. CHEMICAL TREATMENT FOR RUST PREVENTION. BAKED WHITE ENAMEL FINISH. 85% MIN. REFLECTANCE (INTERIOR). ENTIRE HOUSING SHALL BE PAINTED WHITE. HOUSING SHALL NOT DEFLECT MORE THAN THE FOLLOWING WHEN LIFTED BY ONE CORNER:

| TYPE: | A | B | C |
|---|---|---|---|
| | 15mm | 25mm | 50mm |

2. SECURE HOUSING ENDS BY RIVETS OR SCREWS. HOUSING SHALL HAVE INTERNAL GREEN GROUNDING SCREW.

3. OVERALL LUMINAIRE NOMINAL DIMENSIONS ( ± 20mm) SHALL BE:

| TYPE | LENGTH | WIDTH | DEPTH |
|---|---|---|---|
| A | 1220mm | 180mm | 110mm |
| B | 1220mm | 250mm | 90mm |
| C | 1220mm | 380mm | 90mm |

4. LENS SHALL BE CLEAR EXTRUDED PRISMATIC 100% ACRYLIC HAVING A MINIMUM OVERALL (BOTTOM OF LENS) THICKNESS OF 2.54mm WITH A MAXIMUM PRISM PENETRATION DEPTH OF 1.8mm (1.4mm MINIMUM OVERALL SIDE THICKNESS) AND SONICALLY WELDED END PLATES TO FORM A SINGLE PIECE, 5–SIDED BASKET. SNAP ON ENDS NOT ACCEPTABLE.

5. LENS SHALL HINGE ALONG ENTIRE LENGTH OF FIXTURE (LIFT AND SHIFT TYPE). LENS SHALL BE CAPABLE OF HINGING FROM BOTH SIDES OF FIXTURE.

6. BALLAST: HIGH POWER FACTOR ( $\geq$ .95) INSTANT START CLASS P ELECTRONIC BALLAST WITH SOUND RATING OF "A". SECURE BALLAST TO HOUSING WITH AT LEAST ONE SCREW AND SLIP–ON BRACKET OR 2 SCREWS – ONE AT EACH END.

7. PHOTOMETRICS: MINIMUM COEFFICIENT OF UTILIZATION (CU) FOR THE FOLLOWING CAVITY REFLECTANCES: CEILING = 80% WALL = 50% FLOOR = 20%

| ROOM CAVITY RATIO | | TYPE A | TYPE B | TYPE C |
|---|---|---|---|---|
| 1 | CU = | 83 | 77 | 78 |
| 2 | | 73 | 68 | 68 |
| 3 | | 65 | 60 | 61 |
| 4 | | 57 | 54 | 54 |

8. MINIMUM SPACING CRITERIA: 1.3

TYPE A – 1 F32/T8 LAMP
TYPE B – 2 F32/T8 LAMPS
TYPE C – 4 F32/T8 LAMPS

# SURFACE MOUNTED WRAP–AROUND LUMINAIRE FOR STANDARD OFFICE AND OTHER TYPE SPACES

| SKETCH DATE | NOVEMBER 1995 | STYLE | NL–2 |
|---|---|---|---|

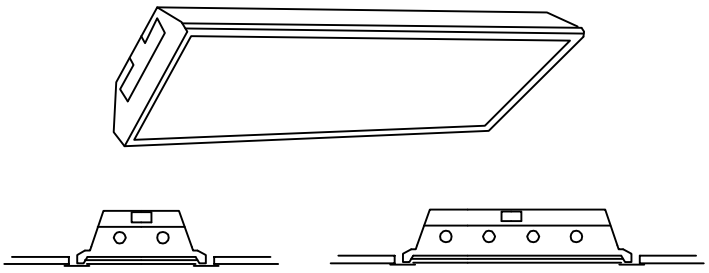

LUMINAIRE REQUIREMENTS

1. HOUSING SHALL BE 0.6mm MIN. THICKNESS. HEIGHT SHALL BE 101mm MIN. AND SHALL NOT PERMANENTLY DEFORM WHEN LIFTED BY ONE CORNER WITH LENS DOOR IN PLACE NOR WITH LENS DOOR REMOVED. LENS DOOR SHALL NOT OPEN WHEN LUMINAIRE IS LIFTED BY ONE CORNER. LUMINAIRE SHALL HAVE LESS THAN THE FOLLOWING DEFLECTION WHEN LIFTED BY ONE CORNER WITH LENS DOOR REMOVED.

| TYPE: | A | B | C, D, & E |
|---|---|---|---|
| | 75mm | 65mm | 100mm |

2. HOUSING SHALL BE CHEMICALLY TREATED FOR RUST PREVENTION AND HAVE BAKED WHITE ENAMEL FINISH 85% MIN. REFLECTANCE (INTERIOR). PAINT ENTIRE HOUSING AND LENS DOOR WHITE, AFTER FABRICATION. HOUSING SHALL HAVE INTERNAL GREEN GROUNDING SCREW.

3. LATCHES SHALL BE A 0.7mm MINIMUM THICKNESS STEEL OR 0.4mm MINIMUM THICKNESS SPRING STEEL.

4. LENS DOOR SHALL BE 0.6mm MINIMUM THICKNESS STEEL, SHALL BE ASSEMBLED WITH SCREWS (FOR LENS REPLACEMENT). PROVIDE LIGHT TIGHT FIT WITHOUT MOVABLE BAFFLES. GASKETING SHALL NOT BE A MEANS OF ACHIEVING LIGHT TIGHT DOOR.

5. LENS SHALL BE 4mm, PATTERN 19 (FOR TYPES A, C, D & E) AND 3.2mm, PATTERN 12 (FOR TYPE B) PLUS OR MINUS 10% OVERALL (2.3mm MAX, PRISM PENETRATION) CLEAR PRISMATIC 100% ACRYLIC.

6. DOOR SHALL BE CAPABLE OF HINGING AND LATCHING FROM EITHER SIDE OF LUMINAIRE. PROVIDE SAFETY TYPE HINGES.

7. BALLAST SHALL BE HIGH POWER FACTOR ( $\geq$ .95) INSTANT START CLASS P ELECTRONIC BALLAST WITH SOUND RATING OF "A". SECURE BALLAST TO HOUSING WITH AT LEAST ONE SCREW AND SLIP–ON BRACKET OR 2 SCREWS ONE AT EACH END.

8. PHOTOMETRICS: MINIMUM COEFFICIENT OF UTILIZATION (CU) FOR THE FOLLOWING CAVITY REFLECTANCES: CEILING = 80% WALL = 50% FLOOR = 20%

| ROOM CAVITY RATIO | TYPE: | A | B | C | D | E |
|---|---|---|---|---|---|---|
| 1 | CU | 72 | 70 | 80 | 79 | 76 |
| 2 | | 64 | 63 | 71 | 70 | 68 |
| 3 | | 58 | 56 | 64 | 63 | 61 |
| 4 | | 52 | 51 | 57 | 56 | 54 |
| MIN. SPACING CRITERIA | | 1.2 | 1.2 | 1.2 | 1.2 | 1.2 |

9. PROVIDE MOUNTING HARDWARE COMPATIBLE WITH CEILING MATERIAL IN WHICH LUMINAIRE IS TO BE INSTALLED.

| | |
|---|---|
| TYPE A – 610mmX610mm | 2 F40/T5 LONG TWIN TUBE LAMPS |
| TYPE B – 305mmX1220mm | 2 F32/T8 LAMPS |
| TYPE C – 610mmX1220mm | 2 F32/T8 LAMPS |
| TYPE D – 610mmX1220mm | 3 F32/T8 LAMPS |
| TYPE E – 610mmX1220mm | 4 F32/T8 LAMPS |

# FLUORESCENT TROFFER LUMINAIRE LENS TYPE

| SKETCH DATE NOVEMBER 1995 | STYLE | NL–3 |
|---|---|---|

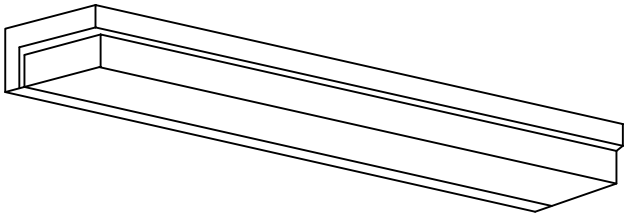

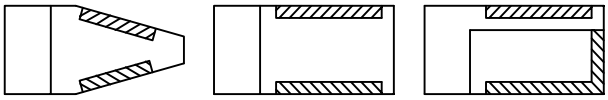

TYPICAL NL–4 FIXTURE CROSS SECTIONS – SEE OPTIONS.

LUMINAIRE REQUIREMENTS

1. 0.8mm MINIMUM THICKNESS STEEL BACK PLATE AND REFLECTOR. CHEMICAL TREATMENT FOR RUST PREVENTION. BAKED WHITE ENAMEL FINISH. PROVIDE KNOCKOUTS THROUGH BACK PLATE. HOUSING SHALL HAVE INTERNAL GREEN GROUNDING SCREW.

2. 0.8mm MINIMUM THICKNESS DIE FORMED STEEL OR EXTRUDED ALUMINUM HOUSING. BAKED BLACK ENAMEL OR BRUSHED ALUMINUM FINISH OR WOOD GRAIN VINYL ON ALUMINUM HOUSING, UNLESS INDICATED OTHERWISE. STEEL HOUSING SHALL HAVE ALL JOINTS WELDED AND GROUND SMOOTH. HOUSING SHALL BE PAINTED AFTER FABRICATION.

3. MAXIMUM OVERALL LUMINAIRE HEIGHT SHALL BE 140mm. MAXIMUM LUMINAIRE DEPTH SHALL BE 205mm. MAXIMUM LUMINAIRE LENGTH SHALL BE:

   TYPE A – 660mm
   TYPE B – 965mm
   TYPE C – 1270mm

4. LOWER LENS SHALL BE CLEAR SINGLE PIECE 100% ACRYLIC HAVING AN OVERALL NOMINAL THICKNESS OF 2.8mm PLUS OR MINUS 10%. UPLIGHT LENS SHALL BE 100% ACRYLIC WITH A MINIMUM OF 2.3mm OVERALL THICKNESS.

5. LENS SHALL BE PRISMATIC (TO REDIRECT LIGHT, PREVENTING DIRECT GLARE AT HIGH VIEWING ANGLES) OR LUMINAIRE SHALL HAVE OPAQUE FRONT.

6. LENS SHALL HAVE SPRING STEEL LATCHES FOR RETAINING LENS, OR POSITIVE MEANS OF HOLDING LENS IN PLACE.

7. LUMINAIRE SHALL PROVIDE UP AND DOWN LIGHT. UP LIGHT SHALL BE SEPARATELY SWITCHED WHERE INDICATED. LAMPS SHALL BE ENCLOSED ON TOP AND BOTTOM.

8. BALLAST SHALL BE HIGH POWER FACTOR ( $\geq$ .95) INSTANT START CLASS P ELECTRONIC BALLAST WITH SOUND RATING OF "A". SECURE BALLASTS TO HOUSING WITH AT LEAST ONE SCREW AND SLIP–ON BRACKET OR 2 SCREWS – ONE AT EACH END.

9. WHERE LUMINAIRE REQUIRES SEPARATELY SWITCHED UP LIGHT, LUMINAIRE SHALL HAVE TWO BALLASTS AND METAL BAFFLE BETWEEN LAMPS.

TYPE A – 2 F17/T8 LAMPS
TYPE B – 2 F25/T8 LAMPS
TYPE C – 2 F32/T8 LAMPS

OPTIONS

1. UP AND DOWN LIGHT
2. UP AND/OR DOWN LIGHT (SEE NOTE 9)
3. DOWN LIGHT ONLY (SOLID TOP REQ'D)

# WALL–MOUNTED FLUORESCENT

| SKETCH DATE | FEBRUARY 1998 | STYLE | NL–4 |
|---|---|---|---|

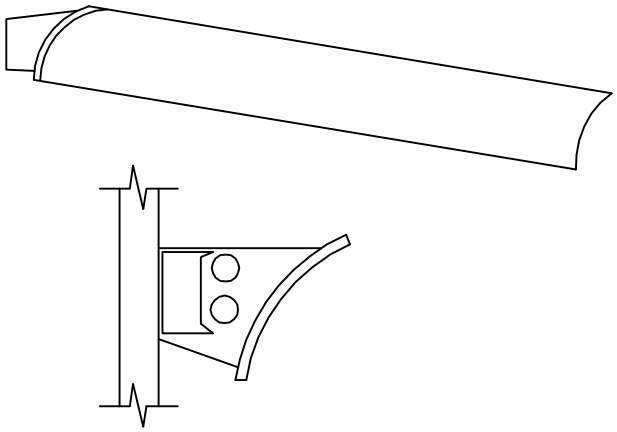

LUMINAIRE REQUIREMENTS

1. 0.8mm MINIMUM THICKNESS STEEL CHANNEL AND COVER. PAINT HOUSING, SUPPORTING BRACKETS AND BACKSIDE OF WOOD SHIELDING. CHEMICAL TREATMENT FOR RUST PREVENTION AND BAKED WHITE ENAMEL FINISH. HOUSING SHALL HAVE INTERNAL GREEN GROUNDING SCREW.

2. PROVIDE SHIELD SUPPORT SUCH THAT NO FASTENERS, SCREWS, TABS OR UNNECESSARY KNOCKOUTS ARE VISIBLE WHEN LUMINAIRE IS IN PLACE.

3. SHIELD SHALL BE 6mm MOLDED PLYWOOD CURVED TO PROVIDE OPTIMUM LIGHT DISTRIBUTION. FINISH WITH WALNUT VENEER AND CLEAR MATTE LACQUER. PROVIDE MATCHING WOOD END CAPS AT EACH END OF EACH RUN TO COVER STEEL CHANNEL.

4. BALLAST SHALL BE HIGH POWER FACTOR ( $\geq$ .95) INSTANT START CLASS P ELECTRONIC BALLAST WITH A SOUND RATING OF "A".

NOTE

SPECIFY: LAMP LENGTH, LAMP TYPE; RAPID START, SLIMLINE, HIGH OUTPUT; LAMP COLOR TEMPERATURE, ETC.

# WALL–MOUNTED INDIRECT FLUORESCENT WITH WOOD SHIELDING

| | | | |
|---|---|---|---|
| SKETCH DATE | NOVEMBER 1995 | STYLE | NL–5 |

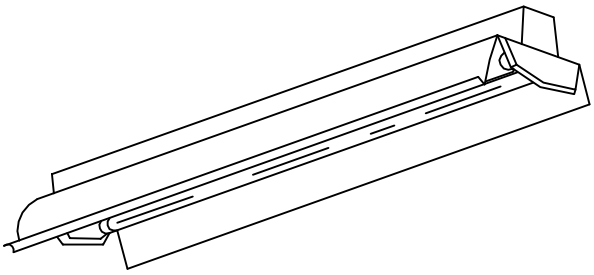

LUMINAIRE REQUIREMENTS

1. HOUSING SHALL BE 0.6mm MINIMUM THICKNESS DIE FORMED COLD ROLLED STEEL, CHEMICALLY TREATED FOR RUST PREVENTION AND FINISHED WITH WHITE BAKED ENAMEL OR POLYESTER FINISH. PROVIDE TOP AND END KNOCKOUTS IN FIXTURE AND METAL END PLATES.

2. HOUSING WELDED OR SECURED BY SCREWS, RIVETS OR SNAP TOGETHER TABS AND SLOTS, INTO A SINGLE ASSEMBLY. PROVIDE INTERNAL GREEN GROUNDING SCREW.

3. REFLECTOR SHALL BE 0.5mm MINIMUM THICKNESS STEEL (SOLID WHEN LUMINAIRE IS MOUNTED BELOW CATWALKS, ETC. 10–20% APERTURES WHEN PROTECTED FROM FALLING OBJECTS.) PROVIDE 30° SHIELDING CENTER VEE. CHEMICALLY TREAT FOR RUST PREVENTION AND FINISH WITH WHITE BAKED ENAMEL, PORCELAIN ENAMEL, OR POLYESTER FINISH. MINIMUM REFLECTANCE SHALL BE 85%.

4. THE LUMINAIRE SHALL NOT PERMANENTLY DEFORM WHEN LIFTED BY ONE CORNER.

5. MINIMUM SPACING CRITERIA: 1.3

6. LUMINAIRE SHALL BE CAPABLE OF CONTINUOUS ROW AND SINGLE UNIT PLACEMENT WITH PENDANT OR SURFACE MOUNTING.

7. BALLAST SHALL BE HIGH POWER FACTOR ( $\geq$ .95) INSTANT START CLASS P ELECTRONIC BALLAST WITH A SOUND RATING OF "A".

TYPE A – 2 F32/T8 LAMPS
TYPE B – 2 F96/T12 LAMPS
TYPE C – 4 F32/T8 LAMPS IN TANDEM (2440mm FIXTURE LENGTH)

OPTIONS

1. WIRE GUARD

# INDUSTRIAL FLUORESCENT

| | | | |
|---|---|---|---|
| SKETCH DATE | NOVEMBER 1995 | STYLE | NL–6 |

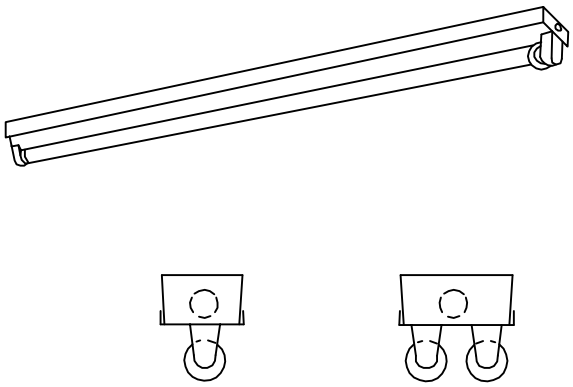

LUMINAIRE REQUIREMENTS

1. 0.6mm MINIMUM THICKNESS STEEL CHANNEL.
2. CHEMICALLY TREAT STEEL FOR RUST PREVENTION, AND FINISH WITH BAKED WHITE ENAMEL OR POLYESTER PAINT.
3. BALLAST SHALL BE HIGH POWER FACTOR ( $\geq$ .95) INSTANT START CLASS P ELECTRONIC BALLAST WITH A SOUND RATING OF "A".
4. HOUSING SHALL HAVE INTERNAL GREEN GROUNDING SCREW.
5. PROVIDE 0.5mm MINIMUM THICKNESS STEEL REFLECTOR (SYMMETRIC OR ASYMMETRIC AS INDICATED) WHEN INDICATED.

TYPE A – 1 F32/T8 LAMP

TYPE B – 2 F32/T8 LAMPS

TYPE C – 1 F96/T12 LAMP

TYPE D – 2 F96/T12 LAMPS

OPTIONS

1. WIRE GUARD

# STRIP FLUORESCENT

| | | | |
|---|---|---|---|
| SKETCH DATE | NOVEMBER 1995 | STYLE | NL–7 |

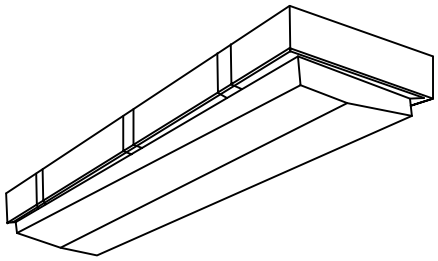

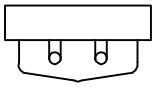

LUMINAIRE REQUIREMENTS

1. MOLDED 100% ACRYLIC DIFFUSE LENS (NOT CLEAR) FULLY GASKETED WITH FIBERGLASS OR PLASTIC HOUSING.

2. PROVIDE A MINIMUM OF 6 PLASTIC LATCHES TO SECURE LENS.

3. BALLAST SHALL BE HIGH POWER FACTOR ( $\geq$ .95) INSTANT START CLASS P ELECTRONIC BALLAST WITH A SOUND RATING OF "A". SECURE BALLAST TO HOUSING WITH AT LEAST ONE SCREW AND SLIP–ON BRACKET OR 2 SCREWS – ONE AT EACH END.

4. UL LISTED FOR DAMP OR WET LABEL AS INDICATED.

5. OVERALL LUMINAIRE LENGTH SHALL BE 1220mm NOMINAL.

6. MINIMUM COEFFICIENT OF UTILIZATION (CU) WITH CAVITY REFLECTANCES OF 80% CEILING, 50% WALLS AND 20% FLOOR SHALL BE:

| RCR | TYPE A | TYPE B |
|---|---|---|
| 1 | CU = 76 | 70 |
| 2 | 65 | 60 |
| 3 | 57 | 52 |
| 4 | 50 | 46 |

7. MINIMUM SPACING CRITERIA: 1.5

8. HOUSING SHALL HAVE INTERNAL GREEN GROUNDING SCREW.

TYPE A – 1 F32/T8 LAMP.
TYPE B – 2 F32/T8 LAMPS.

HOUSING OPTIONS

1. UL LISTED FOR DAMP LOCATIONS.

2. UL LISTED FOR WET LOCATIONS.

# WET/DAMP LOCATION LUMINAIRES

| SKETCH DATE | NOVEMBER 1995 | STYLE | NL–8 |
|---|---|---|---|

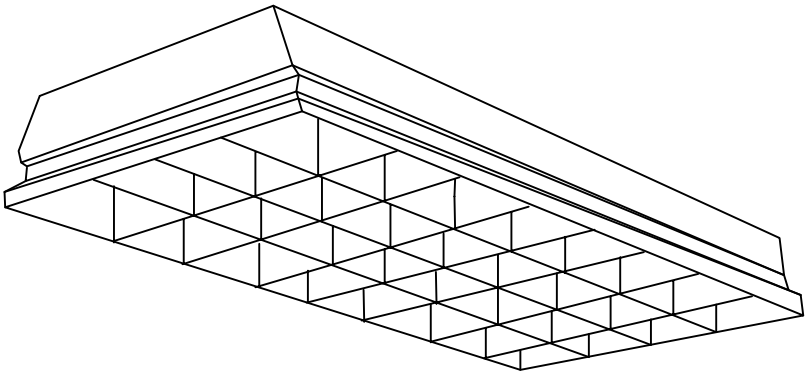

LUMINAIRE REQUIREMENTS

1. HOUSING SHALL BE MINIMUM 0.6mm THICK STEEL. HOUSING SHALL BE CHEMICALLY TREATED FOR RUST PREVENTION AND PAINT ADHESION. ENDS SHALL BE SECURED WITH SCREWS OR WELDED. HOUSING SHALL BE COMPLETELY PAINTED AFTER FABRICATION WITH MINIMUM 85% REFLECTANCE WHITE ENAMEL. MINIMUM DEPTH OF HOUSING 180mm ± 25mm. MINIMUM DEPTH OF LOUVER SHALL BE 75mm.

2. LUMINAIRE SHALL HAVE FULL MATTE BLACK REVEAL FOR FLOATING DOOR EFFECT. PROVIDE MOUNTING TRIM AND HARDWARE COMPATIBLE WITH CEILING MATERIAL.

3. LUMINAIRE SHALL BE HIGH EFFICIENCY, LOW BRIGHTNESS TYPE WITH INTERLOCKED LOUVERS CONTOURED TO A PARABOLIC SHAPE. LOUVERS SHALL BE OF MINIMUM 0.6mm SEMI–SPECULAR ANODIZED ALUMINUM IN NATURAL OR GOLD FINISH AS INDICATED.

4. FIXTURE HOUSING SHALL HAVE INTERNAL GREEN GROUNDING SCREW.

5. NO EXPOSED INTERNAL WIRING.

6. BALLAST SHALL BE HIGH POWER FACTOR ( $\geq$ .95) INSTANT START CLASS P ELECTRONIC BALLAST WITH SOUND RATING OF "A". SECURE BALLAST TO HOUSING WITH AT LEAST ONE SCREW AND SLIP–ON BRACKET OR 2 SCREWS, ONE AT EACH END.

7. LOUVER SHALL BE SUITABLE FOR HINGING FROM EITHER SIDE AND SHALL HAVE TWO SAFETY HINGES AND TWO SPRING LOADED LATCHES OR FOUR SPRING LOADED LATCHES.

LAMP TYPES

TYPE A – 610mmX610mm – 2 F40/T5 LONG TWIN TUBE LAMPS – 9, 12 OR 16 CELLS.
TYPE B – 610mmX610mm – 3 F40/T5 LONG TWIN TUBE LAMPS – 9, 12 OR 16 CELLS.
TYPE C – 610mmX1220mm – 2 F32/T8 LAMPS – 12, 16, 24 OR 32 CELLS
TYPE D – 610mmX1220mm – 3 F32/T8 LAMPS – 18, 24 OR 27 CELLS
TYPE E – 610mmX1220mm – 4 F32/T8 LAMPS – 12, 24 OR 32 CELLS

NOTE

INDICATE FINISH AND NO. OF CELLS.

PARABOLIC TROFFERS
610mmX610mm AND 610mmX1220mm

| SKETCH DATE NOVEMBER 1995 | STYLE | NL–9 |
|---|---|---|

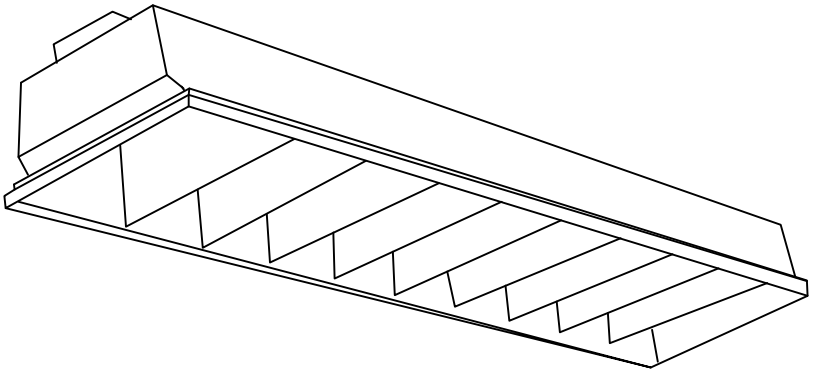

LUMINAIRE REQUIREMENTS

1. HOUSING SHALL BE MINIMUM 0.6mm THICK STEEL. HOUSING SHALL BE CHEMICALLY TREATED FOR RUST PREVENTION AND PAINT ADHESION. ENDS SHALL BE SECURED WITH SCREWS OR WELDED. HOUSING SHALL BE COMPLETELY PAINTED AFTER FABRICATION WITH MINIMUM 85% REFLECTANCE WHITE ENAMEL. MINIMUM DEPTH OF HOUSING 180mm ± 25mm. MINIMUM DEPTH OF LOUVER SHALL BE 75mm.

2. LUMINAIRE SHALL HAVE FULL MATTE BLACK REVEAL FOR FLOATING DOOR EFFECT. PROVIDE MOUNTING TRIM AND HARDWARE COMPATIBLE WITH CEILING MATERIAL.

3. LUMINAIRE SHALL BE HIGH EFFICIENCY, LOW BRIGHTNESS TYPE WITH INTERLOCKED LOUVERS CONTOURED TO A PARABOLIC SHAPE. LOUVERS SHALL BE OF MINIMUM 0.6mm SEMI–SPECULAR ANODIZED ALUMINUM, IN NATURAL OR GOLD FINISH AS INDICATED.

4. FIXTURE HOUSING SHALL HAVE INTERNAL GREEN GROUNDING SCREW.

5. NO EXPOSED INTERNAL WIRING.

6. BALLAST SHALL BE HIGH POWER FACTOR ( $\geq$ .95) INSTANT START CLASS P ELECTRONIC BALLAST WITH SOUND RATING OF "A". SECURE BALLAST TO HOUSING WITH AT LEAST ONE SCREW AND SLIP–ON BRACKET OR 2 SCREWS, ONE AT EACH END.

7. LOUVER SHALL BE SUITABLE FOR HINGING FROM EITHER SIDE AND SHALL HAVE TWO SAFETY HINGES AND TWO SPRING LOADED LATCHES OR FOUR SPRING LOADED LATCHES.

TYPE A – 1 F32/T8 LAMP – 6, 8, 9, 12, 16 OR 18 CELLS

TYPE B – 2 F32/T8 LAMPS – 6, 8, 9, 12, 16 OR 18 CELLS

TYPE C – 1 F32/T8 LAMP – 12, 16, 18 OR 20 CELLS (2 ROWS)

TYPE D – 2 F32/T8 LAMPS – 12, 16, 18 OR 20 CELLS (2 ROWS)

NOTE

INDICATE FINISH AND NO. OF CELLS.

# PARABOLIC TROFFER 305mmX1220mm

| | | | |
|---|---|---|---|
| SKETCH DATE | NOVEMBER 1995 | STYLE | NL–10 |

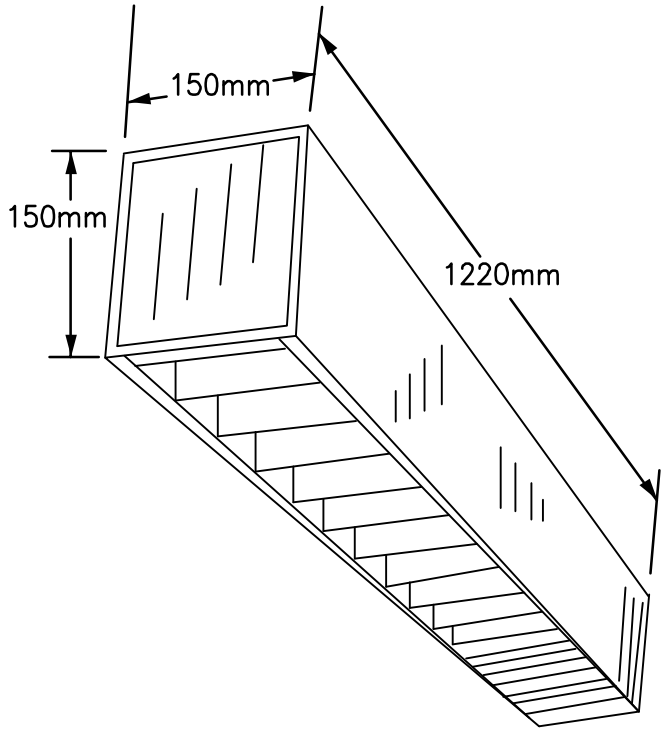


LUMINAIRE REQUIREMENTS

1. HOUSING SHALL BE MINIMUM 0.6mm THICK STEEL, OR EXTRUDED ALUMINUM CONSTRUCTION, AND SHALL BE CHEMICALLY TREATED FOR RUST PREVENTION AND PAINT ADHESION. HOUSING SHALL BE ASSEMBLED WITH SCREWS OR BY JOINTS WELDED AND GROUND SMOOTH.

2. INTERIOR OF HOUSING SHALL BE PAINTED WITH MINIMUM 85% REFLECTANCE HIGH GLOSS WHITE ENAMEL.

3. REFLECTOR SHALL BE SEMI–SPECULAR NATURAL ANODIZED ALUMINUM.

4. PARABOLIC LOUVER SHALL BE ANODIZED NATURAL ALUMINUM AND SHALL HAVE POSITIVE ACTION SPRING LOADED LATCHES AND SAFETY HINGES.

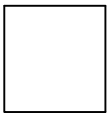

SURFACE

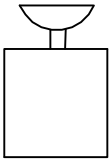

PENDANT

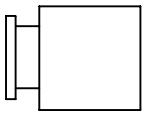

BRACKET

5. PROVIDE INTERNAL GREEN GROUNDING SCREW.

6. BALLAST: HIGH POWER FACTOR ( $\geq$ .95) INSTANT START CLASS P ELECTRONIC BALLAST WITH SOUND RATING OF "A". SECURE BALLASTS TO HOUSING WITH AT LEAST ONE SCREW AND SLIP–ON BRACKET OR TWO SCREWS – ONE AT EACH END.

7. COLOR OF HOUSING SHALL BE AS INDICATED IN FIXTURE SCHEDULE.

TYPE A – DIRECT – 1 F32/T8 LAMP
TYPE B – DIRECT – 2 F32/T8 LAMPS

TYPE C – INDIRECT – 1 F32/T8 LAMP
TYPE D – INDIRECT – 2 F32/T8 LAMPS

TYPE E – DIRECT/INDIRECT – 1 F32/T8 LAMP
TYPE F – DIRECT/INDIRECT – 2 F32/T8 LAMPS
TYPE G – DIRECT ASYMMETRIC – 1 F32/T8 LAMP

NOTE: TYPES C, D, E & F MAY ONLY BE PENDANT OR BRACKET MOUNTED.

# SURFACE, PENDANT OR BRACKET–MOUNTED PARABOLIC LUMINAIRE

| | | | |
|---|---|---|---|
| SKETCH DATE | NOVEMBER 1995 | STYLE | NL–11 |

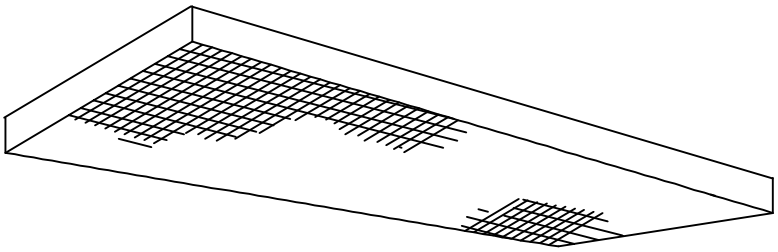

LUMINAIRE REQUIREMENTS

1. 0.8mm MINIMUM THICKNESS STEEL HOUSING WITH CORNERS WELDED. ALL 4 SIDES SHALL BE SOLID STEEL WITHOUT HOLES OR PANELS. 115mm MAXIMUM FIXTURE HEIGHT. FINISH WITH RUST INHIBITOR AND BAKED WHITE ENAMEL. HOUSING SHALL BE PAINTED AFTER FABRICATION. PROVIDE INTERNAL GREEN GROUNDING SCREW.

2. 0.8mm MINIMUM THICKNESS STEEL OR ALUMINUM DOOR HELD TOGETHER BY SCREWS (FOR LENS REPLACEMENT). THE DOOR SHALL BE LIGHT TIGHT WITHOUT RELYING ON GASKETS. DOORS SHALL BE HELD IN PLACE BY 2 "T" TYPE HINGES AND 2 SLOT HEAD, CAPTIVE SCREWS.

3. LENS SHALL BE 4mm PLUS OR MINUS 10% OVERALL (2.3mm MAXIMUM PRISM PENETRATION) CLEAR PRISMATIC 100% ACRYLIC.

4. BALLAST SHALL BE HIGH POWER FACTOR ( $\geq$ .95) INSTANT START CLASS P ELECTRONIC BALLAST WITH SOUND RATING OF "A". SECURE BALLAST TO HOUSING WITH AT LEAST ONE SCREW AND SLIP-ON BRACKET OR 2 SCREWS (ONE AT EACH END).

| | |
|---|---|
| TYPE A – 610mm X 610mm | 2 F40/T5 LONG TWIN TUBE LAMPS |
| TYPE B – 305mm X 1220mm | 2 F32/T8 LAMPS |
| TYPE C – 610mm X 1220mm | 2 F32/T8 LAMPS |
| TYPE D – 610mm X 1220mm | 3 F32/T8 LAMPS |
| TYPE E – 610mm X 1220mm | 4 F32/T8 LAMPS |

# STEEL SIDED SURFACE FLUORESCENT

| | | | |
|---|---|---|---|
| SKETCH DATE | NOVEMBER 1995 | STYLE | NL–12 |

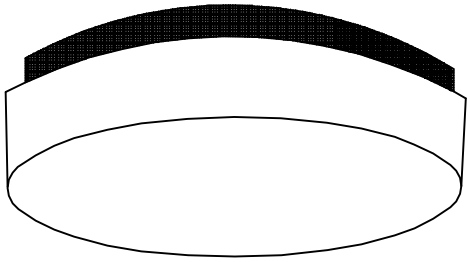

LUMINAIRE REQUIREMENTS

1. ALUMINUM HOUSING WITH MATTE BLACK FINISH.
2. ACRYLIC OPAL GLOBE.
3. PROVIDE SPRING STEEL CLIPS, SET SCREWS OR TORSION SPRINGS TO KEEP GLOBE IN PLACE.
4. PROVIDE DAMP LABEL WHEN INDICATED.
5. PROVIDE INTERNAL GREEN GROUNDING SCREW.
6. PROVIDE HIGH POWER FACTOR ( $\geq$ .9) ELECTROMAGNETIC BALLAST.
7. PROVIDE FLUORESCENT LAMPS AS INDICATED, WITH LUMINAIRE MAXIMUM SIZE AS FOLLOWS:

| TYPE | LAMP WATTAGE | LUMINAIRE DEPTH ± | LUMINAIRE DIAMETER ± |
|---|---|---|---|
| A | 19 TO 22 | 100mm | 280mm |
| B | 32 OR 22+32 | 100mm | 350mm |
| C | 40 OR 32+40 | 130mm | 500mm |
| D | 2–F13/T4 TWIN TUBE COMPACT FLUORESCENT | 130mm | 460mm |

# ROUND SURFACE FLUORESCENT

| SKETCH DATE | NOVEMBER 1995 | STYLE | NL–13 |
|---|---|---|---|

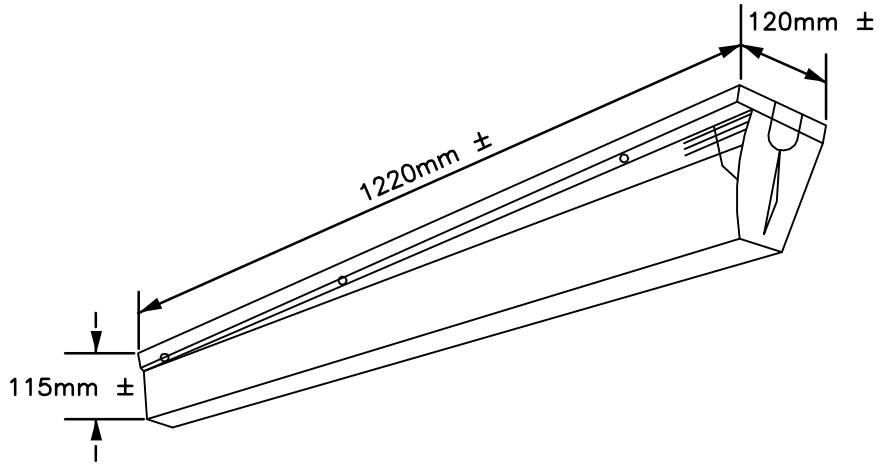


LUMINAIRE REQUIREMENTS

1. SECURE LENS TO BACKPLATE WITH MINIMUM 6 STAINLESS STEEL TAMPERPROOF SCREWS.

2. 1 F32/T8 LAMP.

3. MOUNT BACKPLATE TO WALL OR CEILING WITH MINIMUM OF 6 SCREWS OR ANCHORS PER FIXTURE.

4. FIXTURE SHALL BE UL LISTED FOR WET LOCATIONS.

5. PROVIDE INTERNAL GREEN GROUNDING SCREW.

6. MIN. 14mm ONE PIECE STEEL BACKPLATE WITH WHITE BAKED ENAMEL FINISH. HOUSING SHALL BE PAINTED AFTER FABRICATION.

7. BALLAST SHALL BE HIGH POWER FACTOR ( $\geq$ .95) INSTANT START CLASS P ELECTRONIC BALLAST WITH SOUND RATING OF "A".

8. VANDAL RESISTANT MIN. 3.2mm THICK CLEAR PRISMATIC INJECTION MOLDED WRAPAROUND LENS.

SURFACE MOUNTED
1–LAMP VANDAL RESISTANT LUMINAIRE

| | | | |
|---|---|---|---|
| SKETCH DATE | NOVEMBER 1995 | STYLE | NL–14 |

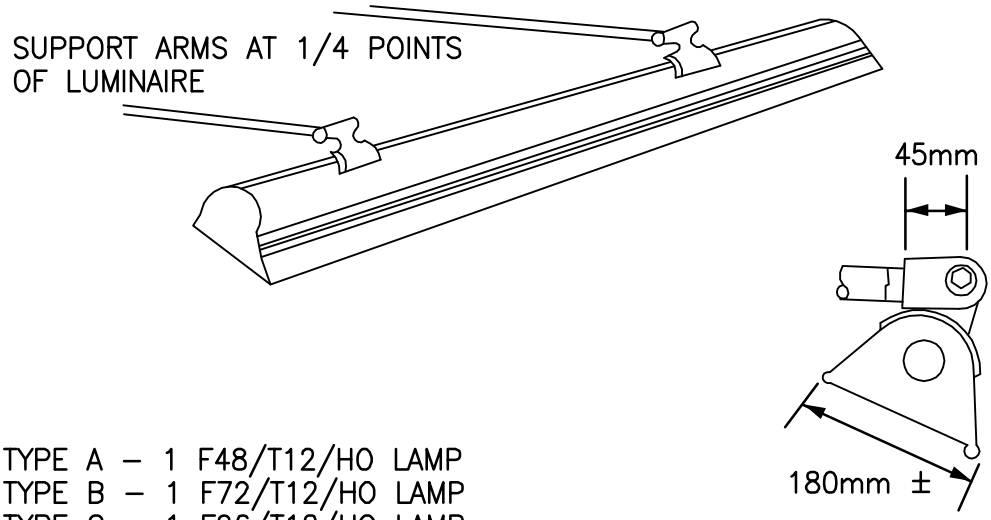


TYPE A – 1 F48/T12/HO LAMP
TYPE B – 1 F72/T12/HO LAMP
TYPE C – 1 F96/T12/HO LAMP
TYPE D – 2 F72/T12/HO LAMPS – 3660mm FIXTURE LENGTH

LUMINAIRE REQUIREMENTS

1. HOUSING, HEAVY DUTY EXTRUDED ANODIZED ALUMINUM WITH PARABOLIC SHAPED SPECULAR ANODIZED ALUMINUM REFLECTORS.
2. SPRING LOADED SOCKETS WITH GASKET FACING.
3. HIGH IMPACT ACRYLIC ENCLOSING SHIELD OR LENS.
4. ALL FASTENERS SHALL BE STAINLESS STEEL OR CADMIUM PLATED.
5. LUMINAIRE SHALL BE COMPLETELY PREWIRED.
6. BALLAST TYPE AND LOCATION AS INDICATED.
7. PROVIDE INTERNAL GREEN GROUNDING SCREW.
8. UL LISTED, AS INDICATED IN SCHEDULE.

OPTIONS

1. UL LISTED FOR DAMP LOCATIONS.
2. UL LISTED FOR WET LOCATIONS.

ARM MOUNTED
OUTDOOR SIGN LUMINAIRE

| | | | |
|---|---|---|---|
| SKETCH DATE | NOVEMBER 1995 | STYLE | NL–15 |

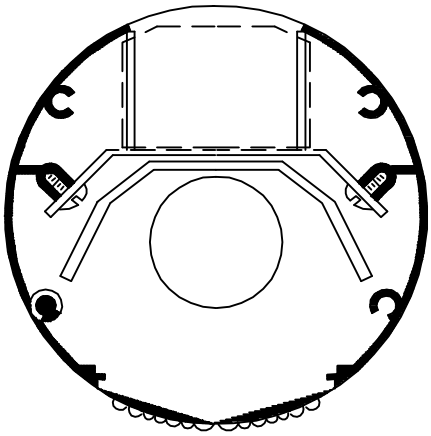

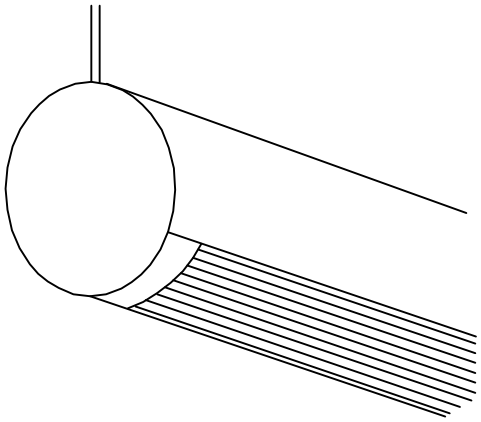

LUMINAIRE REQUIREMENTS

1. HOUSING EXTRUDED ALUMINUM OR HI–TEMP ABS THERMOPLASTIC – PRIME PAINT WITH BAKED ENAMEL OF COLOR INDICATED.
2. REFLECTOR – DIE FORMED HIGH GLOSS BAKED WHITE ENAMEL OR ALUMINUM WITH MINIMUM 85% REFLECTANCE.
3. SHIELDING – CLEAR PRISMATIC LENS TOP AND BOTTOM – 100% ACRYLIC.
4. BALLAST SHALL BE HIGH POWER FACTOR ( $\geq$ .95) INSTANT START CLASS P ELECTRONIC BALLAST WITH SOUND RATING OF "A".
5. END PLATES WITH PROVISIONS FOR THROUGH WIRING.
6. 90° ELBOW CONNECTOR OF CAST ALUMINUM OR HI–TEMP ABS THERMOPLASTIC WITH CABLE SUPPORT PROVISIONS. COLOR TO MATCH FIXTURE.
7. IN–LINE CONNECTOR FOR CABLE SUPPORT OF FIXTURE. COLOR TO MATCH FIXTURE.
8. PROVIDE FIXTURES, ELBOWS, AND IN–LINE CONNECTORS AS INDICATED.
9. PROVIDE INTERNAL GREEN GROUNDING SCREW.
10. PROVIDE LAMPS AS INDICATED.

TYPE A – 130mm ± DIA. WITH INTEGRAL BALLAST
TYPE B – 90mm ± DIA. WITH REMOTE BALLAST. (SHOW BALLAST LOCATION ON PLANS)

DECORATIVE/SPECIALTY
1–LAMP LUMINAIRE

| | | | |
|---|---|---|---|
| SKETCH DATE | NOVEMBER 1995 | STYLE | NL–16 |

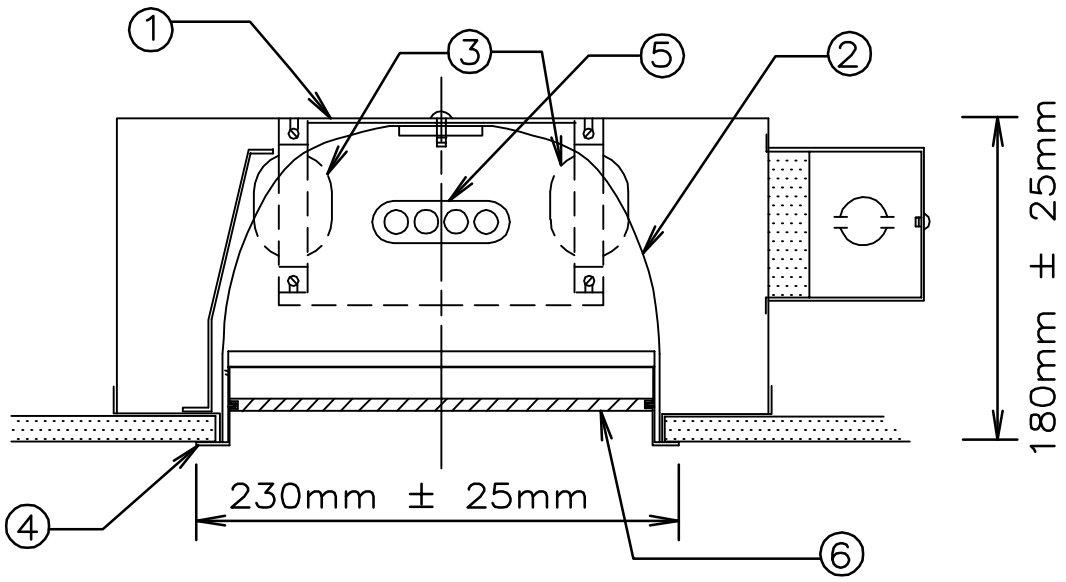


LUMINAIRE REQUIREMENTS

1. HOUSING – ALUMINUM OR STEEL WITH BAKED ENAMEL FINISH. (305mm X 305mm ± 25mm) PROVIDE INTERNAL GREEN GROUNDING SCREW.

2. REFLECTOR–SPECULAR ALUMINUM.

3. HIGH POWER FACTOR ( $\geq$ .9) ELECTROMAGNETIC BALLAST.

4. TRIM FLANGE–WHITE ACRYLIC PAINT OR ALUMINUM AS INDICATED.

5. LAMPS–COMPACT FLUORESCENT, SIZE AS INDICATED.

6. LENS–FLAT PRISMATIC GLASS OR OPAL AS INDICATED.

7. MINIMUM FIXTURE EFFICIENCY–44%.

8. MINIMUM SPACING CRITERIA: 1.2

9. FIXTURE SHALL BE UL LISTED.

TYPE A – 2 F9/T4 TWIN TUBE COMPACT FLUOR. LAMPS.
TYPE B – 2 F13/T4 TWIN TUBE COMPACT FLUOR. LAMPS.

RECESSED ROUND, LENS TYPE COMPACT FLUORESCENT

| | | | |
|---|---|---|---|
| SKETCH DATE | NOVEMBER 1995 | STYLE | NL–17 |

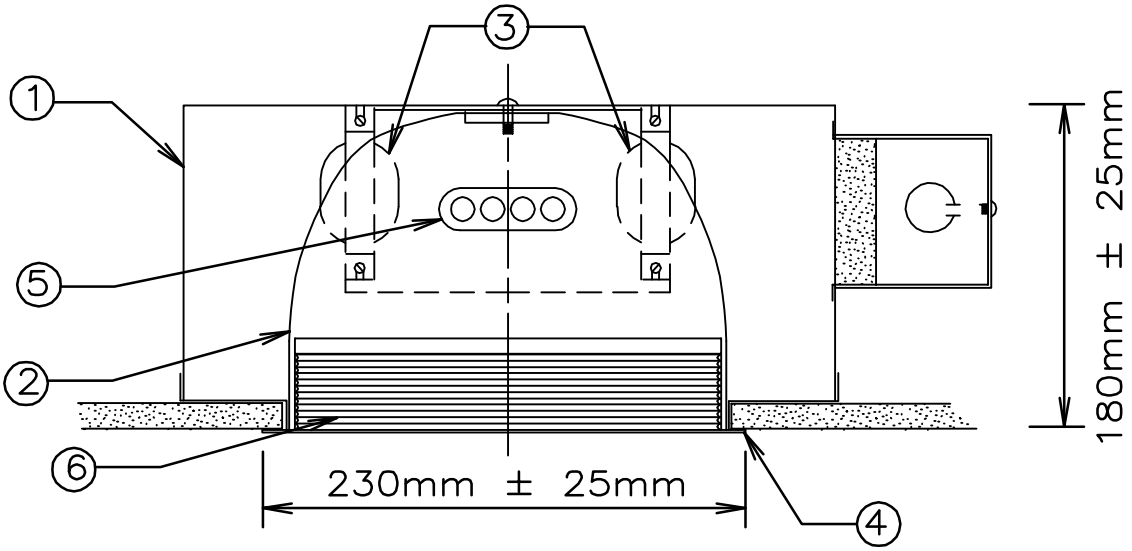


LUMINAIRE REQUIREMENTS

1. HOUSING – ALUMINUM OR STEEL WITH BAKED ENAMEL FINISH. (305mm X 305mm ± 25mm) PROVIDE INTERNAL GREEN GROUNDING SCREW.

2. REFLECTOR–SPECULAR ALUMINUM.

3. HIGH POWER FACTOR ( $\geq$ .9) ELECTROMAGNETIC BALLAST.

4. TRIM FLANGE–WHITE ACRYLIC PAINT OR ALUMINUM AS INDICATED.

5. LAMPS–COMPACT FLUORESCENT, SIZE AS INDICATED.

6. MATTE BLACK EXTRUDED MULTIGROOVE BAFFLE.

7. MINIMUM FIXTURE EFFICIENCY–65%.

8. MINIMUM SPACING CRITERIA: 1.1

9. FIXTURE SHALL BE UL LISTED.

TYPE A – 2 F9/T4 TWIN TUBE COMPACT FLUOR. LAMPS.
TYPE B – 2 F13/T4 TWIN TUBE COMPACT FLUOR. LAMPS.

RECESSED ROUND, OPEN BOTTOM MULTIGROOVE COMPACT FLUORESCENT

| | | | |
|---|---|---|---|
| SKETCH DATE | NOVEMBER 1995 | STYLE | NL–18 |

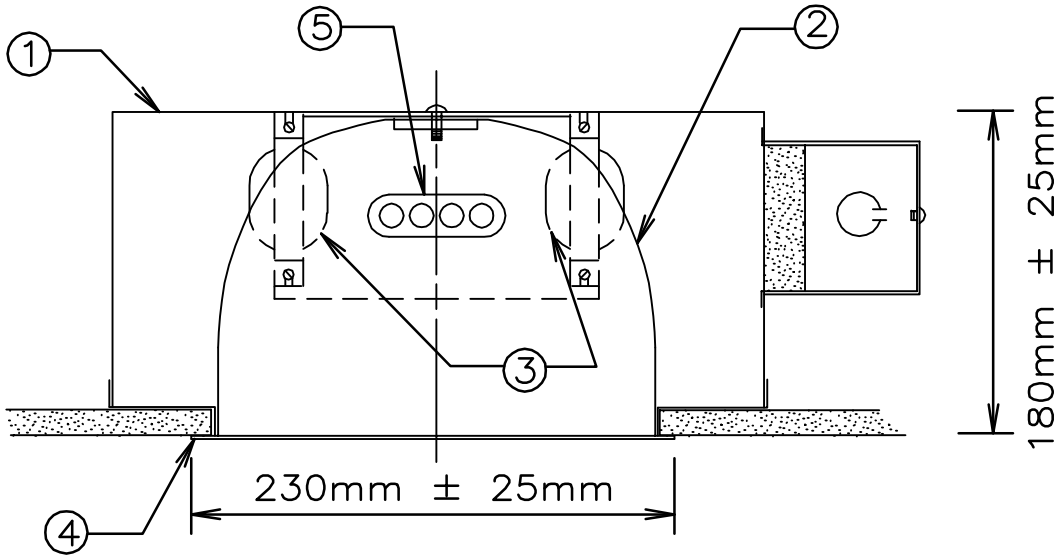


LUMINAIRE REQUIREMENTS

1. HOUSING – ALUMINUM OR STEEL WITH BAKED ENAMEL FINISH. (305mm X 305mm ± 25mm) PROVIDE INTERNAL GREEN GROUNDING SCREW.

2. REFLECTOR–SPECULAR ALUMINUM.

3. HIGH POWER FACTOR ( $\geq$ .9) ELECTROMAGNETIC BALLAST.

4. TRIM FLANGE–WHITE ACRYLIC PAINT OR ALUMINUM AS INDICATED.

5. LAMPS–COMPACT FLUORESCENT, SIZE AS INDICATED.

6. MINIMUM FIXTURE EFFICIENCY–80%.

7. MINIMUM SPACING CRITERIA: 1.5

8. FIXTURE SHALL BE UL LISTED.

TYPE A – 2 F9/T4 TWIN TUBE COMPACT FLUOR. LAMPS.
TYPE B – 2 F13/T4 TWIN TUBE COMPACT FLUOR. LAMPS.

RECESSED ROUND, OPEN BOTTOM
COMPACT FLUORESCENT

| | | | |
|---|---|---|---|
| SKETCH DATE | NOVEMBER 1995 | STYLE | NL–19 |

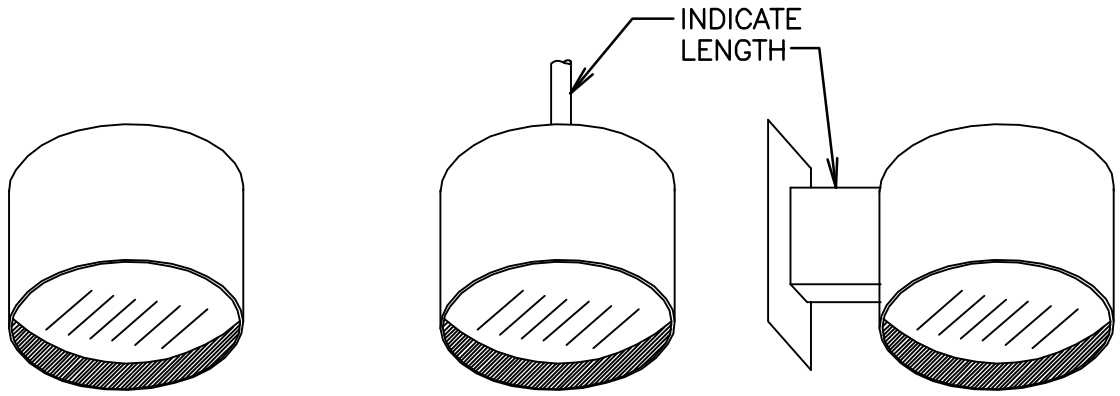


SURFACE MOUNT
TYPE A

PENDANT MOUNT
TYPE B

WALL MOUNT
TYPE C

LAMP OPTIONS

1. 2 F13/T4 DOUBLE TWIN TUBE COMPACT FLUORESCENT LAMPS.
2. 2 F26/T4 DOUBLE TWIN TUBE COMPACT FLUORESCENT LAMPS.

LUMINAIRE REQUIREMENTS

1. HOUSING – ALUMINUM 1.3mm ± THICK WITH WHITE ACRYLIC ENAMELED FINISH. PROVIDE INTERNAL GREEN GROUNDING SCREW.
2. REFLECTOR – SPECULAR ALUMINUM.
3. BALLAST – HIGH POWER FACTOR ( $\geq$ .9) ELECTROMAGNETIC BALLAST.
4. LENS TRIM RING – ALUMINUM WITH WHITE ACRYLIC ENAMELED FINISH.
5. REGRESS – 25mm MATTE BLACK FROM TRIM RING UP TO LENS.
6. LENS – FLAT PRISMATIC GLASS.
7. MINIMUM FIXTURE EFFICIENCY – 60%.
8. MINIMUM SPACING CRITERIA: 1.2
9. HOUSING DIMENSIONS – 300mm DIA. ± 25mm X 150mm HIGH ± 25mm.
10. FIXTURE SHALL HAVE UL LABEL FOR WET OR DAMP LOCATIONS AS INDICATED.

ROUND–SURFACE, PENDANT OR WALL MOUNT
COMPACT FLUORESCENT – INTERIOR/EXTERIOR

| | | | |
|---|---|---|---|
| SKETCH DATE | NOVEMBER 1995 | STYLE | NL–20 |

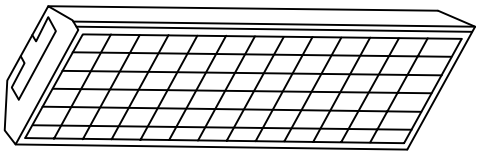

TYPE A – 610mmX610mm
2 F40/T5 LONG TWIN TUBE LAMPS
TYPE B – 610mmX610mm
3 F40/T5 LONG TWIN TUBE LAMPS
TYPE C – 305mmX1220mm – 2 F32/T8 LAMPS
TYPE D – 610mmX1220mm – 2 F32/T8 LAMPS
TYPE E – 610mmX1220mm – 3 F32/T8 LAMPS
TYPE F – 610mmX1220mm – 4 F32/T8 LAMPS

LOUVER SIZE

1. 15mmX15mmX15mm
2. 20mmX20mmX15mm
3. 40mmX40mmX25mm

LUMINAIRE REQUIREMENTS

1. HOUSING SHALL BE 0.6mm MIN. THICKNESS. HEIGHT SHALL BE 140mm ± 25mm AND SHALL NOT PERMANENTLY DEFORM WHEN LIFTED BY ONE CORNER WITH LENS DOOR IN PLACE NOR WITH LENS DOOR REMOVED. LENS DOOR SHALL NOT OPEN WHEN LUMINAIRE IS LIFTED BY ONE CORNER. LUMINAIRE SHALL HAVE LESS THAN THE FOLLOWING DEFLECTION WHEN LIFTED BY ONE CORNER WITH DOOR REMOVED:

| TYPE: | A & B | C | D, E & F |
|---|---|---|---|
| | 75mm | 65mm | 100mm |

2. HOUSING SHALL BE CHEMICALLY TREATED FOR RUST PREVENTION AND HAVE BAKED WHITE ENAMEL FINISH 85% MIN. REFLECTANCE (INTERIOR). PAINT ENTIRE HOUSING AND DOOR, AFTER FABRICATION. PROVIDE INTERNAL GREEN GROUNDING SCREW.

3. LATCHES SHALL BE A 0.8mm MINIMUM THICKNESS STEEL OR 0.4mm MINIMUM THICKNESS SPRING STEEL.

4. DOOR SHALL BE 0.8mm MINIMUM THICKNESS STEEL, SHALL BE ASSEMBLED WITH SCREWS (FOR LOUVER REPLACEMENT). PROVIDE LIGHT TIGHT FIT WITHOUT MOVABLE BAFFLES. GASKETING SHALL NOT BE A MEANS OF ACHIEVING LIGHT TIGHT DOOR.

5. DOOR SHALL BE CAPABLE OF HINGING AND LATCHING FROM EITHER SIDE OF LUMINAIRE. PROVIDE SAFETY TYPE HINGES.

6. BALLAST SHALL BE HIGH POWER FACTOR ( $\geq$ .95) INSTANT START CLASS P ELECTRONIC BALLAST WITH SOUND RATING OF "A". SECURE BALLAST TO HOUSING WITH AT LEAST ONE SCREW AND SLIP–ON BRACKET OR 2 SCREWS – ONE AT EACH END.

7. PROVIDE MOUNTING HARDWARE COMPATIBLE WITH CEILING MATERIAL IN WHICH LUMINAIRE IS TO BE INSTALLED.

8. PHOTOMETRICS: MINIMUM COEFFICIENT OF UTILIZATION (CU) FOR THE FOLLOWING CAVITY REFLECTANCES: CEILING = 80% WALL = 50% FLOOR = 20%

| ROOM CAVITY RATIO | CU |
|---|---|
| 1 | 46 |
| 2 | 43 |
| 3 | 40 |
| 4 | 36 |

FIXTURE TYPE (NL–21, TYPE F2)
(610mmX1220mm WITH 20mmX20mmX15mm PARABOLIC PLASTIC LOUVER AND FOUR F32/T8 LAMPS.)
(CONSULT MANUFACTURER FOR OTHER CU VALUES.)

NOTE: PROVIDE FROSTED MATTE OVERLAY ABOVE LOUVER WHEN INDICATED.
LOUVERS SHALL BE SPECULAR SILVER UNLESS OTHERWISE NOTED.

# FLUORESCENT TROFFER WITH PLASTIC PARABOLIC CUBE LOUVERS

| SKETCH DATE | NOVEMBER 1995 | STYLE | NL–21 |
|---|---|---|---|

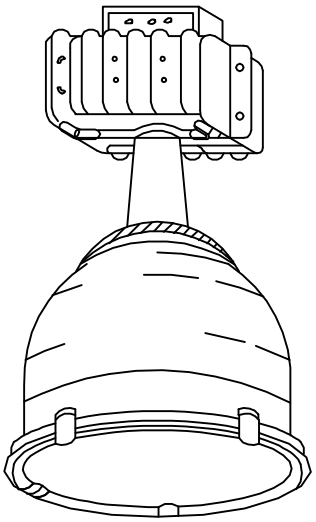

HIGH PRESSURE SODIUM

TYPE A – 150 W.

TYPE B – 250 W.

TYPE C – 400 W.

TYPE D – 1000 W.

METAL HALIDE

TYPE E – 250 W.

TYPE F – 400 W.

TYPE G – 1000 W.

NOTE:

TYPES E, F, AND G ALWAYS REQUIRE ITEM 5–F.

LUMINAIRE REQUIREMENTS

1. STEEL OR ALUMINUM BALLAST HOUSING. SPUN ALUMINUM OR GLASS REFLECTOR. PROVIDE VENTILATION OPENINGS AT TOP OF REFLECTOR. PROVIDE INTERNAL GREEN GROUNDING SCREW.

2. PROVIDE HIGH POWER FACTOR ( $\geq$ .9) ENCASED AND POTTED BALLAST AS SPECIFIED.

3. SUITABLE FOR 55° C AMBIENT OPERATION, UNLESS OTHERWISE NOTED.

4. PROVIDE SAFETY CHAIN FOR BALLAST, GLASS DOOR AND REFLECTOR.

5. OPTIONS WHEN NOTED:
   a. CUSHIONED SHOCK ABSORBING HANGER
   b. POWER HOOK
   c. AUXILIARY QUARTZ LAMP AND ARC SENSING RELAY
   d. WIRE GUARD
   e. SUITABLE FOR 65° C AMBIENT OPERATION
   f. CLEAR TEMPERED GLASS LENS IN GASKETED DOOR, HINGED AND HELD WITH STAINLESS STEEL LATCHES
   g. UL WET OR DAMP LABEL AS INDICATED.

6. MINIMUM SPACING CRITERIA: 0.95

7. MINIMUM COEFFICIENTS OF UTILIZATION (CU) FOR CAVITY REFLECTANCES OF 70% CEILING, 50% WALLS, 20% FLOOR SHALL BE:

| RCR | CU'S TYPES A,B,C,D | CU'S TYPES E,F,G |
|---|---|---|
| 1 | 77 | 73 |
| 2 | 71 | 68 |
| 3 | 66 | 63 |

# HIGH–BAY OPEN/ENCLOSED INDUSTRIAL H.I.D.

SKETCH DATE NOVEMBER 1995 | STYLE NL–22

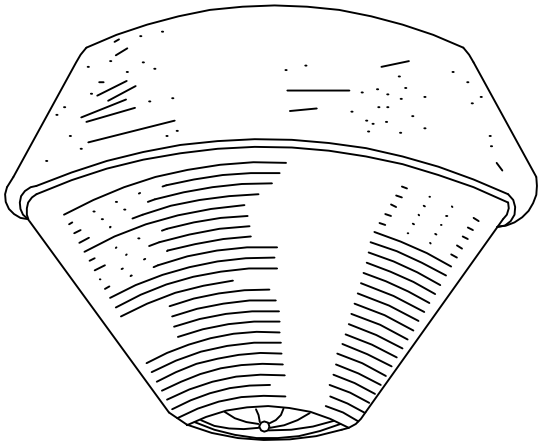

TYPE A – 100–150W HIGH PRESSURE SODIUM
TYPE B – 250–400W

TYPE C – 175W METAL HALIDE
TYPE D – 250–400W

LUMINAIRE REQUIREMENTS

1. SHEET OR CAST ALUMINUM HOUSING. FINISH WITH ENAMEL OR EPOXY. PROVIDE INTERNAL GREEN GROUNDING PROVISIONS.

2. ACRYLIC REFRACTOR OR THERMAL AND SHOCK RESISTANT GLASS LENS.

3. PROVIDE CUSHIONED FIXTURE HANGER. PROVIDE CUSHIONED POWER HOOK WHEN INDICATED.

4. PROVIDE QUARTZ AUXILIARY LAMP AND ARC SENSING RELAY WHEN INDICATED.

5. PROVIDE HIGH POWER FACTOR ( $\geq$ .9) ENCASED AND POTTED BALLAST AS SPECIFIED.

6. MINIMUM COEFFICIENT OF UTILIZATION (CU) WITH CAVITY REFLECTANCES OF 80% CEILING, 50% WALL, 20% FLOOR SHALL BE:

| RCR | TYPE: | A | B | C | D |
|---|---|---|---|---|---|
| 1 | CU = | 79 | 85 | 79 | 80 |
| 2 | | 68 | 73 | 69 | 70 |
| 3 | | 59 | 60 | 60 | 60 |
| MIN. EFFICIENCY | | 80% | 85% | 80% | 85% |
| MIN. SPACING CRITERIA | | 1.8 | 1.8 | 1.8 | 1.8 |

7. PROVIDE LAMP AS INDICATED.

# LOW BAY INDUSTRIAL H.I.D.

| SKETCH DATE | NOVEMBER 1995 | STYLE | NL–23 |
|---|---|---|---|

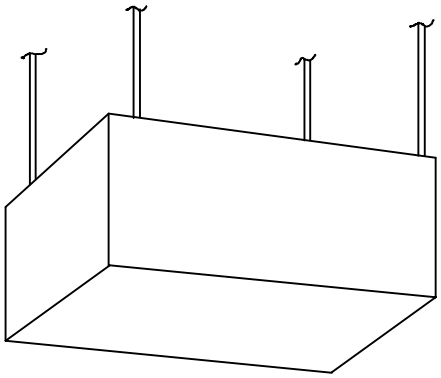

TYPE A

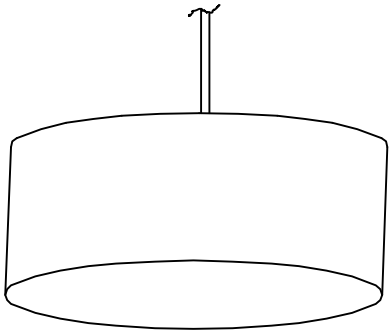

TYPE B

LUMINAIRE REQUIREMENTS

1. 0.8mm MINIMUM THICKNESS STEEL HOUSING WITH ALL SEAMS WELDED AND GROUND SMOOTH. CHEMICALLY TREAT FOR RUST PREVENTION AND PROVIDE BAKED ENAMEL OR POLYESTER FINISH (WHITE UNLESS INDICATED OTHERWISE).
2. ALUMINUM REFLECTOR WITH TEMPERED GLASS LENS.
3. PROVIDE 175, 250, 400 WATT METAL HALIDE OR 150, 250, 400 WATT HIGH PRESSURE SODIUM LAMPS (SINGLE OR TWIN) AS INDICATED.
4. HIGH POWER FACTOR ( $\geq$ .9) ENCASED AND POTTED BALLAST AS SPECIFIED.
5. PROVIDE COMPUTER GENERATED DOCUMENTATION OF THE MAXIMUM, MINIMUM AND AVERAGE INITIAL LUX LEVELS FOR THE SYSTEM AS INDICATED ON THE PLANS. ASSUME REFLECTANCES OF 80%, 50%, 20% FOR CEILINGS, WALLS AND FLOORS RESPECTIVELY.
6. PROVIDE 60% MINIMUM FIXTURE LUMEN OUTPUT BETWEEN 30° TO 90° FROM VERTICAL.
7. PROVIDE INTERNAL GREEN GROUNDING SCREW.

TYPE A & B

CEILING MOUNT LUMINAIRE 762mm MAXIMUM DISTANCE FROM BOTTOM OF FIXTURE TO CEILING UNLESS OTHERWISE INDICATED.

| RCR | MIN. CU 150–250W | MIN. CU 400W |
|---|---|---|
| 1 | 50 | 56 |
| 2 | 43 | 49 |
| 3 | 38 | 43 |
| 4 | 33 | 38 |

TYPE C (NOT SHOWN)

WALL MOUNT LUMINAIRE– (RIGIDLY MOUNT TO WALL) FORWARD THROW OPTICS.

| RCR | MIN. CU |
|---|---|
| 1 | 36 |
| 2 | 32 |
| 3 | 28 |
| 4 | 24 |

# PENDANT/WALL MOUNT–INDIRECT H.I.D.

| SKETCH DATE | NOVEMBER 1995 | STYLE | NL–24 |
|---|---|---|---|

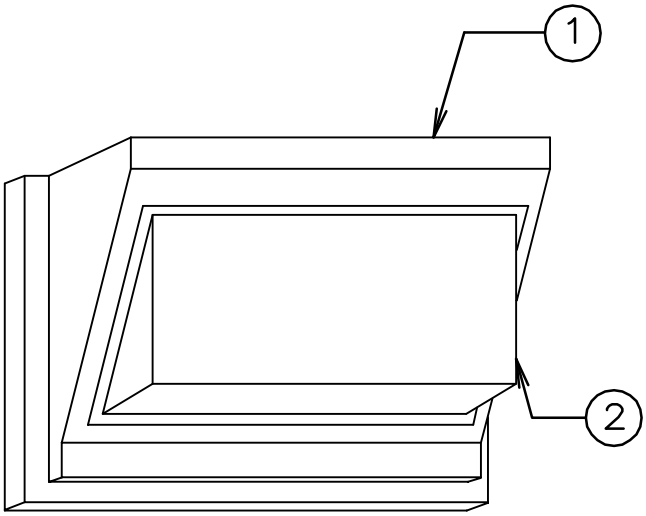


TYPE A – 70W HIGH PRESSURE SODIUM
TYPE B – 100W HIGH PRESSURE SODIUM
TYPE C – 150W HIGH PRESSURE SODIUM
TYPE D – 175W METAL HALIDE
TYPE E – 35W LOW PRESSURE SODIUM

LUMINAIRE REQUIREMENTS

1. HOUSING–DIECAST ALUMINUM, SEALED AND GASKETED. UL LISTED FOR WET LOCATIONS. PROVIDE INTERNAL GREEN GROUNDING SCREW. (DIMENSIONS: APPROXIMATELY 400mmL X 250mmH X 280mmD)

2. REFRACTOR–BOROSILICATE PRISMATIC GLASS. PROVIDE ALUMINUM REFLECTOR.

3. BALLAST–HIGH POWER FACTOR ( $\geq$ .9) ENCASED AND POTTED MULTI–VOLTAGE.

4. FINISH–DARK BRONZE, UNLESS OTHERWISE NOTED.

5. LAMP SOCKET SHALL BE ADJUSTABLE.

6. PROVIDE INTEGRAL PHOTOCELL WHEN INDICATED.

# EXTERIOR COMMERCIAL WALL MOUNT H.I.D.

| | | | |
|---|---|---|---|
| SKETCH DATE | NOVEMBER 1995 | STYLE | NL–25 |

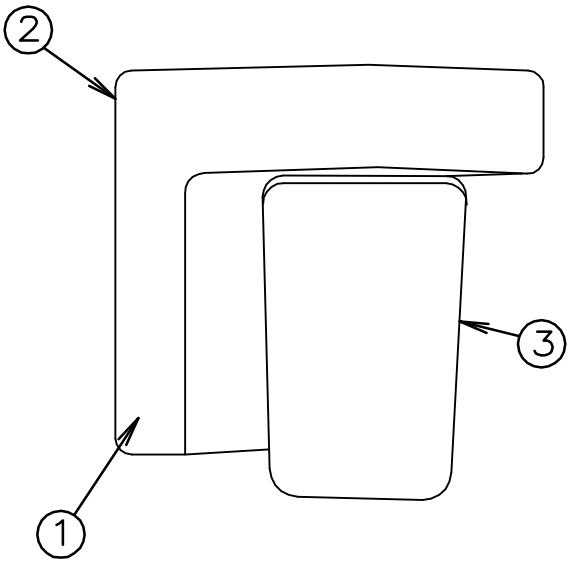


OPTIONS
1. BLACK FINISH
2. INTEGRAL PHOTOCELL
3. AMBER LENS
4. LOCKING SCREW

LUMINAIRE REQUIREMENTS

1. HOUSING SHALL BE ULTRA–VIOLET RESISTANT POLYCARBONATE DARK BRONZE UNLESS INDICATED OTHERWISE. APPROX. 250mmH X 180mmW X 230mmD.
2. PROVIDE WITH ALUMINUM OR POLYCARBONATE BACK PLATE.
3. PROVIDE ACRYLIC OR POLYCARBONATE ULTRA–VIOLET RESISTANT PRISMATIC OR DIFFUSE LENS AS INDICATED.
4. PROVIDE HIGH POWER FACTOR ( $\geq$ .9) ELECTROMAGNETIC BALLAST.
5. PROVIDE INTERNAL GREEN GROUNDING SCREW.
6. PROVIDE UL WET LABEL.
7. PROVIDE COLD WEATHER BALLAST WHEN INDICATED.

LAMP OPTIONS

TYPE A: 1–F7/T4 TWIN TUBE COMPACT FLUORESCENT

TYPE B: 1–F13/T4 TWIN TUBE COMPACT FLUORESCENT

TYPE C: 2–F7/T4 TWIN TUBE COMPACT FLUORESCENT

TYPE D: 2–F13/T4 TWIN TUBE COMPACT FLUORESCENT

TYPE E: 1–18W LOW PRESSURE SODIUM

# EXTERIOR COMPACT FLUORESCENT AND LOW PRESSURE SODIUM–WALL MOUNT

| SKETCH DATE NOVEMBER 1995 | STYLE | NL–26 |
|---|---|---|

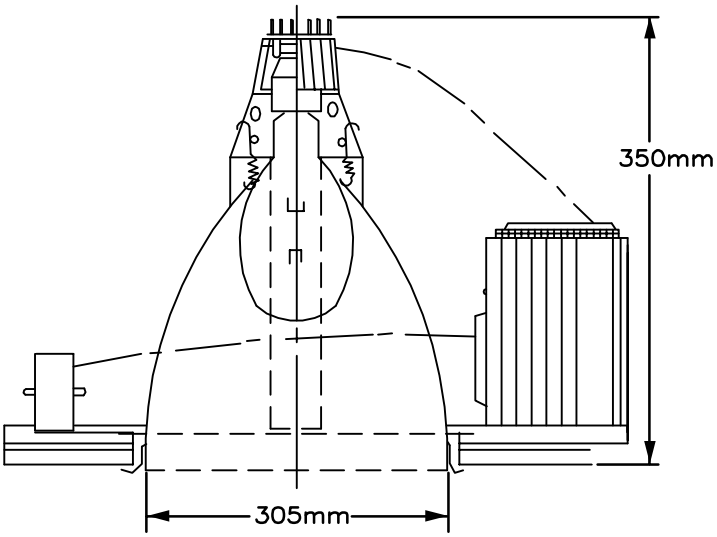


REGRESSED LENS

| | |
|---|---|
| TYPE A | 70W HPS |
| TYPE B | 100W HPS |
| TYPE C | 250W HPS |

LUMINAIRE REQUIREMENTS

1. CAST OR EXTRUDED ALUMINUM SOCKET HOUSING WITH PORCELAIN SOCKET FOR VERTICAL BURNING LAMP.
2. SPECULAR ALUMINUM REFLECTOR.
3. WHITE TRIM RING SUITABLE FOR USE WITH CEILING MATERIAL INSTALLED.
4. HIGH POWER FACTOR ( $\geq$ .9) ENCASED AND POTTED BALLAST ARRANGED FOR MAINTENANCE FROM BELOW CEILING.
5. WIRING JUNCTION BOX SUITABLE FOR 75° C. BRANCH CIRCUIT THROUGH WIRING.
6. LENS SHALL BE TEMPERED GLASS WITH FRESNEL OR PRISMATIC PATTERN.
7. PROVIDE LAMP AS INDICATED.
8. PROVIDE INTERNAL GREEN GROUNDING SCREW.
9. PROVIDE U.L. DAMP LABEL WHEN INDICATED.

USING REFLECTANCES OF 80% CEILING, 50% WALLS AND 20% FLOOR, MINIMUM COEFFICIENTS OF UTILIZATION SHALL BE AS FOLLOWS:

| RCR | TYPE A |
|---|---|
| 1 | CU = 55 |
| 2 | 50 |
| 3 | 45 |
| 4 | 40 |
| MIN. SPACING CRITERIA | 1.0 |

# RECESSED ROUND REGRESSED LENS TYPE H.I.D.

| | | | |
|---|---|---|---|
| SKETCH DATE | NOVEMBER 1997 | STYLE | NL–27 |

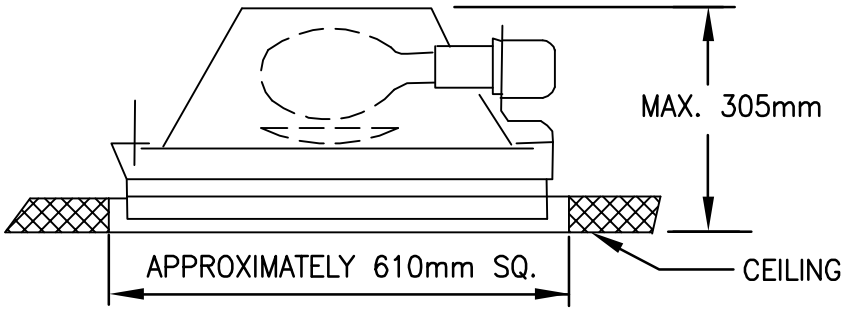


LUMINAIRE REQUIREMENTS

1. MINIMUM 0.6mm THICK DIE FORMED STEEL HOUSING WELDED OR PUT TOGETHER WITH SCREWS TO FORM A RIGID UNIT. HOUSING HINGED FOR RELAMPING FROM ABOVE AND BELOW CEILING.
2. ENTIRE LUMINAIRE SHALL BE FLUSH WITH CEILING, NO PROTRUDING FASTENERS OR HINGES.
3. STEEL DOOR FRAME MINIMUM 0.8mm THICK STEEL WITH BAKED WHITE ENAMEL FINISH.
4. REFLECTOR SHALL BE SPECULAR ALUMINUM.
5. TEMPERED IMPACT RESISTANT PRISMATIC GLASS LENS.
6. PORCELAIN LAMPHOLDER.
7. ALL STEEL PARTS SHALL BE CHEMICALLY TREATED FOR RUST PREVENTION AND PAINT ADHESION AND SHALL BE PAINTED WITH WHITE BAKED ENAMEL FINISH.
8. HIGH POWER FACTOR ( $\geq$ .9) ENCASED AND POTTED BALLAST.
9. PROVIDE INTERNAL GREEN GROUNDING SCREW.
10. FIXTURE SHALL BE U.L. LISTED.
11. PROVIDE HEAT RESISTANT REFRACTOR BELOW LAMP.

TYPE A – 250 WATT METAL HALIDE
TYPE B – 400 WATT METAL HALIDE
TYPE C – 150 WATT HIGH PRESSURE SODIUM
TYPE D – 250 WATT HIGH PRESSURE SODIUM

HANDBALL AND
RACQUETBALL COURT LUMINAIRE

| | | | |
|---|---|---|---|
| SKETCH DATE | NOVEMBER 1995 | STYLE | NL–28 |

TYPE A: 70W HPS
TYPE B: 100W HPS
TYPE C: 150W HPS
TYPE D: 175W MH

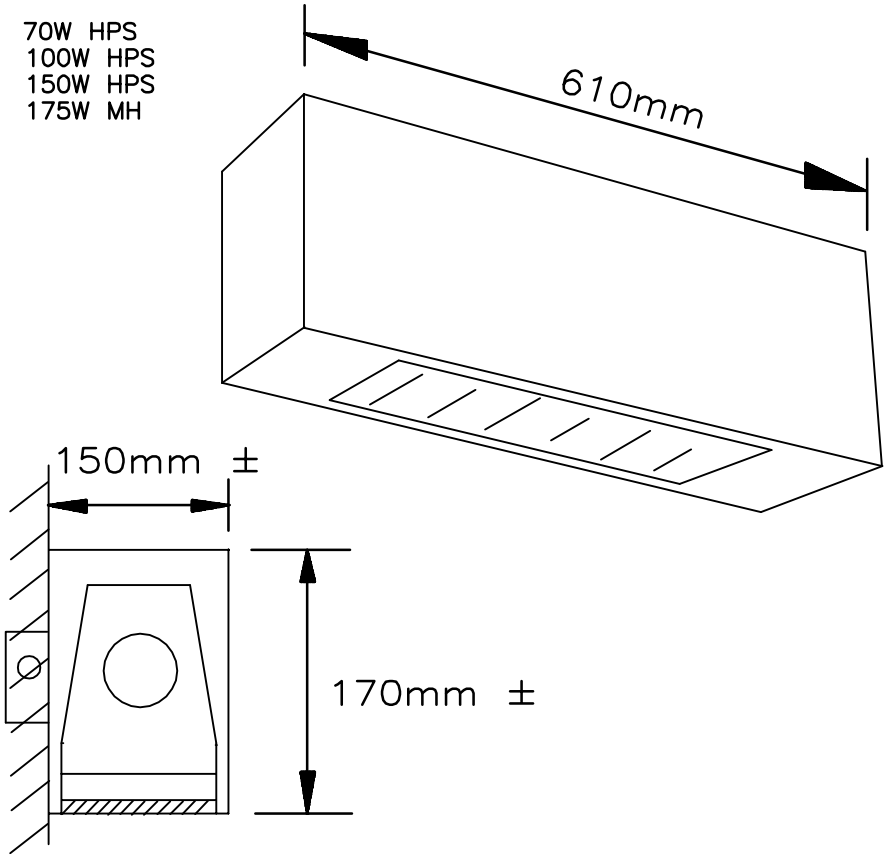


LUMINAIRE REQUIREMENTS

1. UL LISTED FOR WET LOCATIONS.
2. EXTRUDED ALUMINUM HOUSING. PROVIDE INTERNAL GREEN GROUNDING SCREW.
3. HINGED AND GASKETED. EXTRUDED ALUMINUM DOOR SECURED WITH CAPTIVE SCREWS.
4. TEMPERED GLASS LENS SEALED AND GASKETED.
5. JOINTS AND SEAMS SEALED.
6. HIGH POWER FACTOR ( $\geq$ .9) ENCASED AND POTTED BALLAST.
7. FINISH DARK BRONZE BAKED ENAMEL UNLESS OTHERWISE INDICATED.
8. PROVIDE PHOTOCELL WHEN INDICATED.

# ARCHITECTURAL STYLE SECURITY/AREA LUMINAIRE

| SKETCH DATE NOVEMBER 1995 | STYLE NL-29 |
|---|---|

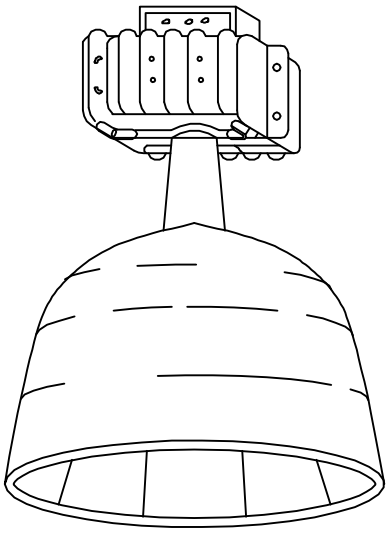

HIGH PRESSURE SODIUM

TYPE A – 250 W.

TYPE B – 400 W.

METAL HALIDE

TYPE C – 400 W.

LUMINAIRE REQUIREMENTS

1. STEEL OR ALUMINUM BALLAST HOUSING. AND ALUMINUM REFLECTOR. PROVIDE VENTILATION OPENINGS AT TOP OF REFLECTOR. PROVIDE INTERNAL GREEN GROUNDING SCREW. PROVIDE UL DAMP LABEL.

2. REFLECTOR SHALL BE FIELD ADJUSTABLE WITH FIVE POSITIONS (MINIMUM) FOR DIFFERENT LIGHT DISTRIBUTIONS. REFLECTOR SHALL HAVE RECTANGULAR OR ASYMMETRICAL DISTRIBUTION TO PROVIDE VERTICAL LIGHT DISTRIBUTION ON STACKS AND LIGHT UP AND DOWN AISLE.

3. ADJUST LIGHT DISTRIBUTION AS INDICATED.

4. PROVIDE HIGH POWER FACTOR ( $\geq$ .9) ENCASED AND POTTED BALLAST AS SPECIFIED.

5. SUITABLE FOR –30° C TO 55° C AMBIENT OPERATION.

6. PROVIDE SAFETY CHAIN FOR BALLAST AND REFLECTOR.

7. OPTIONS WHEN NOTED:
   a. CUSHIONED SHOCK ABSORBING HANGER
   b. POWER HOOK
   c. AUXILIARY QUARTZ LAMP AND ARC SENSING RELAY

8. MINIMUM COEFFICIENTS OF UTILIZATION (CU) FOR CAVITY REFLECTANCES OF 70% CEILING, 50% WALLS, 20% FLOOR SHALL BE:

| RCR | CU'S TYPES A & B | CU'S TYPE C |
|---|---|---|
| 1 | 83 | 88 |
| 2 | 74 | 78 |
| 3 | 65 | 69 |

# WAREHOUSE H.I.D. AISLE LUMINAIRE

| SKETCH DATE | APRIL 1997 | STYLE | NL–30 |
|---|---|---|---|

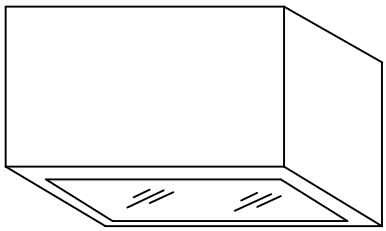

TYPE A – 150W HIGH PRESSURE SODIUM

TYPE B – 250W HIGH PRESSURE SODIUM

TYPE C – 175W METAL HALIDE (COATED)

TYPE D – 250W METAL HALIDE (COATED)

TYPE E – 400W METAL HALIDE (COATED)

LUMINAIRE REQUIREMENTS

1. LUMINAIRE SHALL BE 610mm X 610mm (NOMINAL) SQUARE AND SHALL NOT EXCEED 380mm IN HEIGHT.
2. 0.8mm MINIMUM THICKNESS STEEL OR ALUMINUM HOUSING WITH WHITE POLYESTER OR BAKED ENAMEL FINISH.
3. ALUMINUM REFLECTOR.
4. FULL GASKETED PRISMATIC TEMPERED GLASS LENS IN HINGED ALUMINUM DOOR SECURED BY CAPTIVE SCREWS OR CAM LATCHES. PROVIDE U.L. DAMP OR WET LABEL AS INDICATED.
5. PROVIDE HIGH POWER FACTOR ( $\geq$ .9) ENCASED AND POTTED BALLAST AS SPECIFIED.
6. PROVIDE AUXILIARY QUARTZ LAMP AND ARC SENSING RELAY WHERE INDICATED.
7. PROVIDE LAMP AS INDICATED.
8. LAMP AND BALLAST SHALL BE SERVICEABLE FROM THE BOTTOM OF THE FIXTURE UNLESS OTHERWISE NOTED. PROVIDE INTERNAL GREEN GROUNDING SCREW.
9. MINIMUM SPACING CRITERIA: 1.2
10. FOR REFLECTANCES OF 80% CEILING, 50% WALLS, 20% FLOORS THE COEFFICIENT OF UTILIZATION SHALL NOT BE LESS THAN THE FOLLOWING:

| RCR | CU TYPES A & B | CU TYPES C, D & E |
|---|---|---|
| 1 | 63 | 72 |
| 2 | 57 | 66 |
| 3 | 49 | 60 |
| 4 | 44 | 54 |

# SURFACE MOUNTED COMMERCIAL H.I.D.

| SKETCH DATE NOVEMBER 1995 | STYLE | NL–31 |
|---|---|---|

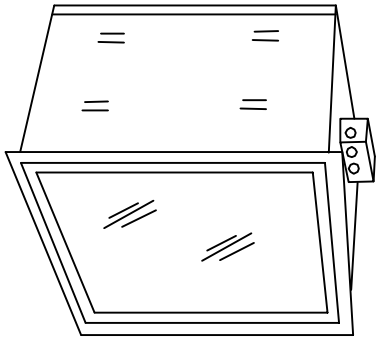

TYPE A – 150W HIGH PRESSURE SODIUM

TYPE B – 250W HIGH PRESSURE SODIUM

TYPE C – 400W HIGH PRESSURE SODIUM

TYPE D – 175W METAL HALIDE (COATED)

TYPE E – 250W METAL HALIDE (COATED)

TYPE F – 400W METAL HALIDE (COATED)

LUMINAIRE REQUIREMENTS

1. 610mm X 610mm (NOMINAL) SQUARE, 380mm MAXIMUM HEIGHT. PROVIDE HARDWARE SUITABLE FOR CEILING MATERIAL IN WHICH USED.
2. STEEL OR ALUMINUM HOUSING WITH CORROSION RESISTANT FINISH.
3. ALUMINUM REFLECTOR.
4. PRISMATIC TEMPERED GLASS LENS IN HINGED ALUMINUM DOOR, SECURED BY CAPTIVE SCREWS OR CAM LATCHES.
5. PROVIDE HIGH POWER FACTOR ( $\geq$ .9) ENCASED AND POTTED BALLAST AS SPECIFIED.
6. PROVIDE AUXILIARY QUARTZ LAMP AND ARC SENSING RELAY WHEN INDICATED.
7. LAMP AND BALLAST SHALL BE SERVICEABLE FROM THE BOTTOM OF THE FIXTURE UNLESS OTHERWISE NOTED. PROVIDE INTERNAL GREEN GROUNDING SCREW.
8. MINIMUM SPACING CRITERIA: 1.2
9. FOR REFLECTANCES OF 80% CEILINGS, 50% WALLS, 20% FLOORS THE COEFFICIENT OF UTILIZATION SHALL NOT BE LESS THAN THE FOLLOWING:

| RCR | CU TYPES A, B & C | CU TYPES D, E & F |
|---|---|---|
| 1 | 61 | 63 |
| 2 | 55 | 58 |
| 3 | 50 | 48 |
| 4 | 46 | 43 |

# RECESSED COMMERCIAL H.I.D.

| SKETCH DATE | NOVEMBER 1995 | STYLE | NL–32 |
|---|---|---|---|

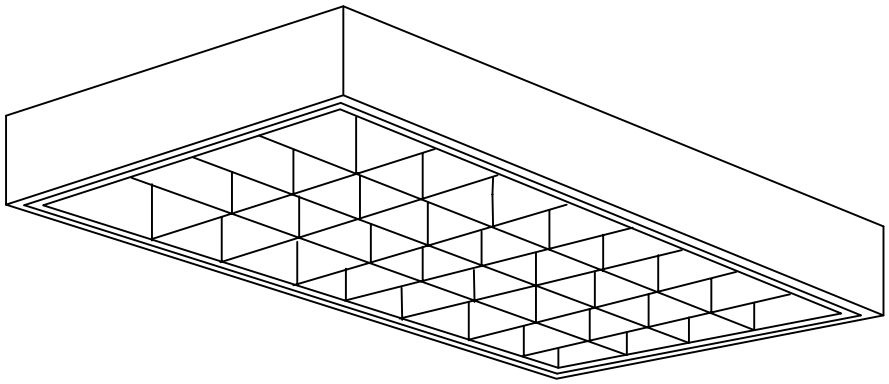

LUMINAIRE REQUIREMENTS

1. HOUSING SHALL BE DIE FORMED OF MINIMUM 0.8mm THICK STEEL. HOUSING SHALL BE CHEMICALLY TREATED FOR RUST PREVENTION AND PAINT ADHESION. HOUSING SHALL BE PAINTED AFTER FABRICATION WITH MINIMUM 85% REFLECTANCE WHITE ENAMEL. MINIMUM DEPTH OF HOUSING 180mm ± 25mm. MINIMUM DEPTH OF LOUVER SHALL BE 75mm.

2. LUMINAIRE SHALL HAVE FULL MATTE BLACK REVEAL FOR FLOATING LOUVER EFFECT.

3. LUMINAIRE SHALL BE HIGH EFFICIENCY, LOW BRIGHTNESS TYPE WITH INTERLOCKED LOUVERS CONTOURED TO A PARABOLIC SHAPE. LOUVERS SHALL BE OF MINIMUM 0.6mm SEMI-SPECULAR ANODIZED ALUMINUM IN NATURAL OR GOLD FINISH AS INDICATED.

4. FIXTURE HOUSING SHALL HAVE INTERNAL GREEN GROUNDING SCREW.

5. NO EXPOSED INTERNAL WIRING.

6. BALLAST SHALL BE HIGH POWER FACTOR ( $\geq$ .95) INSTANT START CLASS P ELECTRONIC BALLAST WITH SOUND RATING OF "A". SECURE BALLAST TO HOUSING WITH AT LEAST ONE SCREW AND SLIP-ON BRACKET OR 2 SCREWS, ONE AT EACH END.

7. LOUVER SHALL BE SUITABLE FOR HINGING FROM EITHER SIDE AND SHALL HAVE TWO SAFETY HINGES AND TWO SPRING LOADED LATCHES OR FOUR SPRING LOADED LATCHES.

LAMP TYPES

TYPE A – 610mmX610mm – 2 F40/T5 LONG TWIN TUBE LAMPS – 9, 12 OR 16 CELLS.
TYPE B – 610mmX610mm – 3 F40/T5 LONG TWIN TUBE LAMPS – 9, 12 OR 16 CELLS.
TYPE C – 610mmX1220mm – 2 F32/T8 LAMPS – 12, 18, 27 OR 32 CELLS
TYPE D – 610mmX1220mm – 3 F32/T8 LAMPS – 18, 24 OR 27 CELLS
TYPE E – 610mmX1220mm – 4 F32/T8 LAMPS – 12, 24 OR 32 CELLS

NOTE

INDICATE FINISH AND NO. OF CELLS.

# SURFACE PARABOLIC FLUORESCENT 610mmX610mm AND 610mmX1220mm

| | | | |
|---|---|---|---|
| SKETCH DATE | JANUARY 2001 | STYLE | NL–33 |

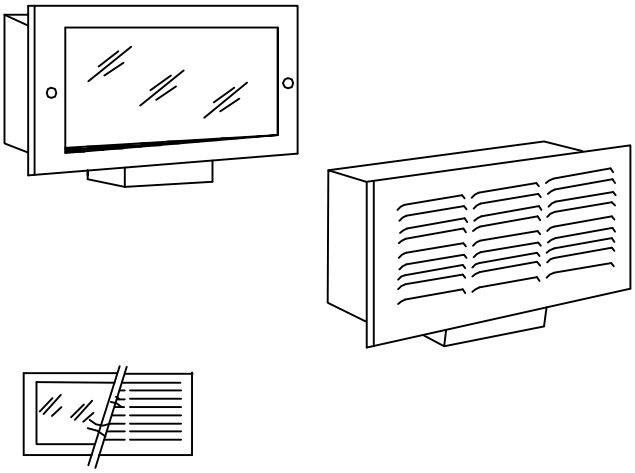

LUMINAIRE REQUIREMENTS

1. 1.4mm MINIMUM THICK-NESS STEEL OR CAST ALUMINUM HOUSING WITH WHITE ENAMEL FINISH AND SPECULAR ALUMINUM REFLECTOR.
2. 4.7mm CAST ALUMINUM FACE PLATE WITH BRUSHED SATIN FINISH AND CLEAR ACRYLIC LACQUER COATING.
3. 130mmH X 280mmW X 100mmD MAXIMUM DIMENSIONS.
4. NEOPRENE GASKET ASSEMBLY FOR EXTERIOR USE.
5. PROVIDE DIFFUSED TEMPERED GLASS FRONT LENS.
6. PORCELAIN SOCKET (TYPE B).
7. PROVIDE INTERNAL GREEN GROUNDING SCREW.
8. WHEN USED ON AREAS SUBJECT TO MOISTURE, FIXTURE SHALL HAVE WET LABEL.
9. PROVIDE STAINLESS STEEL SCREWS.
10. TYPE A FIXTURE REQUIRES HIGH POWER FACTOR ( $\geq$ .9) ELECTROMAGNETIC BALLAST.

TYPE A – 2 F7/T4 TWIN TUBE COMPACT FLUORESCENT LAMPS

TYPE B – 1 60W A-19 LAMP

OPTIONS-AS NOTED

1. PROVIDE POLYCARBONATE FRONT LENS.
2. PROVIDE LOUVER FRONT.
3. FRONT LENS MAY BE DELETED ON LOUVER TYPE WHEN USED ON BUILDING INTERIORS.

# STEP LIGHT/NIGHT LIGHT

| SKETCH DATE | NOVEMBER 1995 | STYLE | NL-40 |
|---|---|---|---|

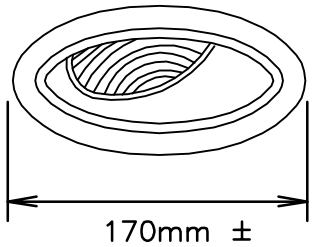


TYPE A – 40W PAR–16/H/SP
TYPE B – 50W ER–30

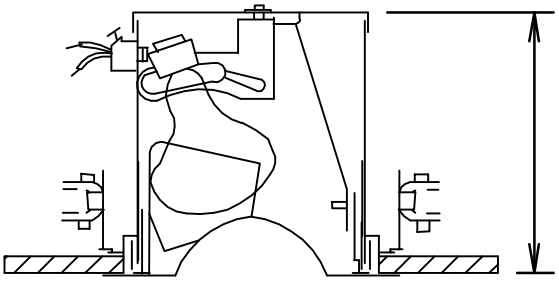


LUMINAIRE REQUIREMENTS

1. 0.8mm MINIMUM THICKNESS STEEL OR ALUMINUM HOUSING WITH MATTE BLACK FINISH.
2. PROVIDE LOW–GLOSS WHITE ENAMEL TRIM RING WITH 205mm MAXIMUM DIAMETER.
3. SPECULAR ALUMINUM REFLECTOR.
4. 0° – 30° ADJUSTABLE SOCKET ASSEMBLY WITH 358° ROTATION.
5. PROVIDE TRIM SUITABLE FOR RECESS MOUNTING OF LUMINAIRE IN CEILING MATERIAL SPECIFIED.
6. PROVIDE PORCELAIN SOCKET WITH FULL METAL SCREW SHELL.
7. PROVIDE INTERNAL GREEN GROUNDING SCREW.
8. FIXTURE SHALL BE SUITABLE FOR THERMALLY PROTECTED OPERATION.

ADJUSTABLE INCANDESCENT
INTERIOR SPOTLIGHT

| | | | |
|---|---|---|---|
| SKETCH DATE | NOVEMBER 1995 | STYLE | NL–41 |

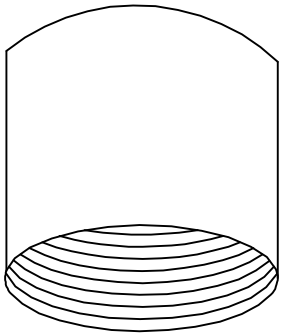

TYPE A – 50W ER–30

TYPE B – 90W PAR–38/H/FL

TYPE C – F13/T4 DOUBLE TWIN TUBE COMPACT FLUORESCENT

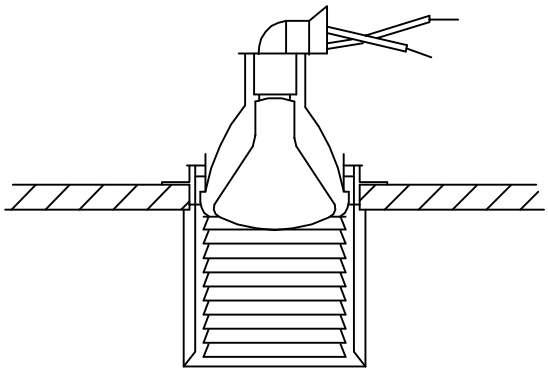

LUMINAIRE REQUIREMENTS

1. 0.8mm MINIMUM THICKNESS STEEL OR ALUMINUM HOUSING WITH ALUMINUM OR STEEL PLASTER RING.
2. PROVIDE A 130mm TO 180mm DIA. APERTURE BLACK GROOVED BAFFLE WITH BRUSHED OR SATIN ALUMINUM EXTERIOR FINISH OR COLOR AS INDICATED. THE EXPOSED LENGTH OF THE LUMINAIRE SHALL BE 130mm TO 180mm.
3. PORCELAIN LAMP SOCKET WITH FULL METAL SCREW SHELL (INCANDESCENT).
4. PROVIDE INTERNAL GREEN GROUNDING SCREW.
5. FIXTURE SHALL BE SUITABLE FOR THERMALLY PROTECTED OPERATION.
6. PROVIDE HIGH POWER FACTOR ( $\geq$ .9) ELECTROMAGNETIC BALLAST (TYPE C).

# SEMI–RECESSED BAFFLE DOWNLIGHT

| | | | |
|---|---|---|---|
| SKETCH DATE | NOVEMBER 1995 | STYLE | NL–42 |

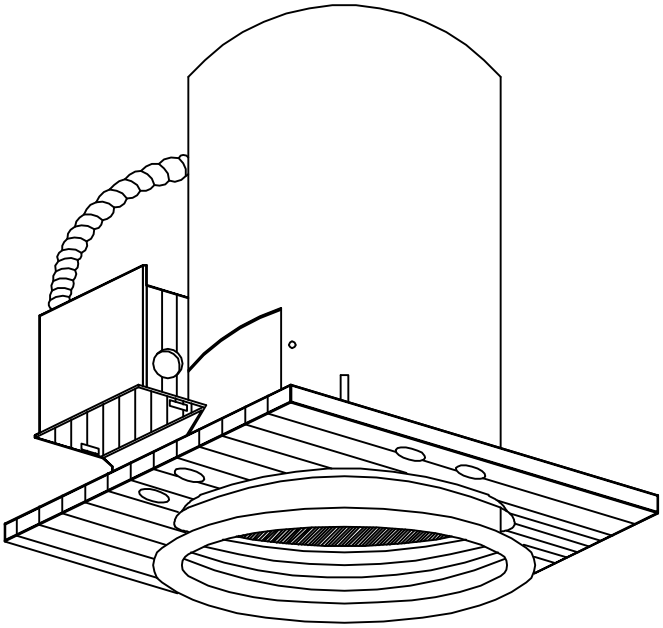

LUMINAIRE REQUIREMENTS

1. 0.8mm MINIMUM THICKNESS PAINTED STEEL OR ALUMINUM HOUSING WITH ALUMINUM REFLECTOR.
2. PROVIDE MATTE WHITE PAINTED TRIM RING – MAXIMUM 205mm DIAMETER.
3. PROVIDE MATTE BLACK MULTIGROOVE BAFFLE.
4. PROVIDE INTERNAL GREEN GROUNDING SCREW.
5. PROVIDE HIGH POWER FACTOR ( $\geq$ .9) ELECTROMAGNETIC BALLAST (TYPE A).
6. HOUSING HEIGHT 280mm ± 25mm.

TYPE A – 1 F13/T4 DOUBLE TWIN TUBE COMPACT FLUORESCENT LAMP.

TYPE B – 1 90W PAR–38/H/FL LAMP WITH PORCELAIN SOCKET AND FULL METAL SCREW SHELL.

# OPEN RECESSED BAFFLE DOWNLIGHT

| | | | |
|---|---|---|---|
| SKETCH DATE | NOVEMBER 1995 | STYLE | NL–43 |

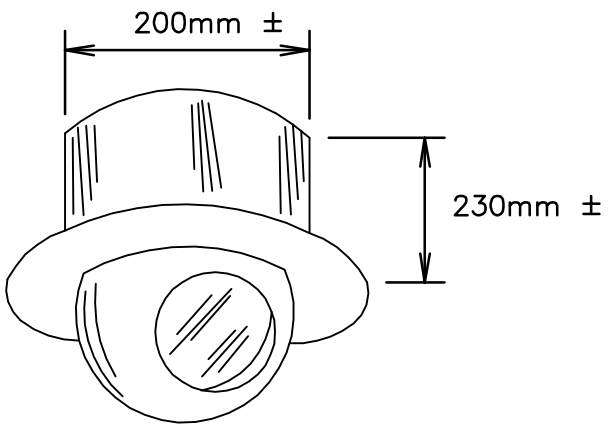


LUMINAIRE REQUIREMENTS

1. 0.8mm MINIMUM THICKNESS STEEL HOUSING – MAXIMUM 205mm HEIGHT.
2. ALUMINUM BALL WITH CAST ALUMINUM TRIM RING. MAXIMUM 205mm O.D.
3. BALL ADJUSTABLE FROM 0° – 45° FROM VERTICAL AND ROTATABLE FOR 359°.
4. PORCELAIN SOCKET SUITABLE FOR USE WITH UP TO 75 WATT ER–30 LAMP.
5. PROVIDE INTERNAL GREEN GROUNDING SCREW.
6. FIXTURE SHALL BE SUITABLE FOR THERMALLY PROTECTED OPERATION.

# ADJUSTABLE SEMI–RECESSED SPOTLIGHT

| | | | |
|---|---|---|---|
| SKETCH DATE | NOVEMBER 1995 | STYLE | NL–44 |

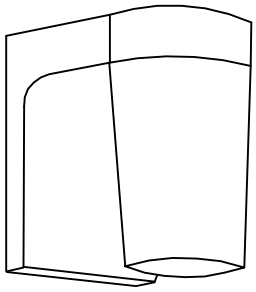

TYPE A

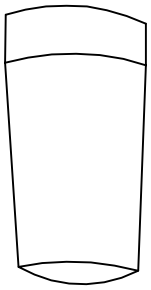

TYPE B

LAMP OPTIONS

1. 1 75W INCANDESCENT
2. 1 F7/T4 TWIN TUBE COMPACT FLUOR. (−18° C)
3. 2 F7/T4 TWIN TUBE COMPACT FLUOR. (−18° C)

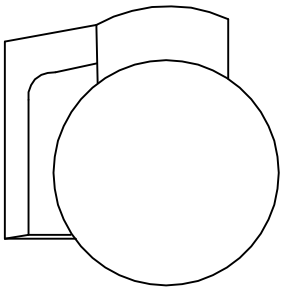

TYPE C

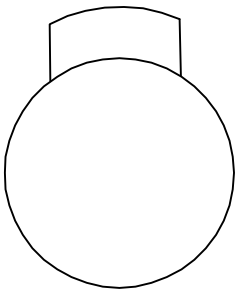

TYPE D

LUMINAIRE REQUIREMENTS

1. CAST ALUMINUM OR ULTRA−VIOLET RESISTANT POLYCARBONATE HOUSING SATIN FINISH AND CLEAR LACQUER COATING ON ALUMINUM HOUSING.
2. PROVIDE PORCELAIN SOCKET WITH FULL METAL SCREW SHELL SUITABLE FOR A 75 WATT INCANDESCENT LAMP. (OPTION 1)
3. GLOBE SHALL BE WHITE POLYCARBONATE, UNLESS INDICATED OTHERWISE.
4. PROVIDE HEAT RESISTANT VAPORTIGHT GASKET BETWEEN GLOBE AND HOUSING. PROVIDE NEOPRENE GASKET BETWEEN LUMINAIRE AND WALL OR CEILING.
5. PROVIDE INTERNAL GREEN GROUNDING SCREW.
6. PROVIDE HIGH POWER FACTOR ( $\geq$ .9) ELECTROMAGNETIC BALLAST. (OPTIONS 2 & 3)
7. FIXTURE SHALL HAVE UL DAMP LOCATION LABEL. PROVIDE WET LABEL WHEN INDICATED.
8. PROVIDE COLD WEATHER BALLAST WHEN INDICATED.

# EXTERIOR LUMINAIRE

| SKETCH DATE | NOVEMBER 1995 | STYLE | NL−45 |
|---|---|---|---|

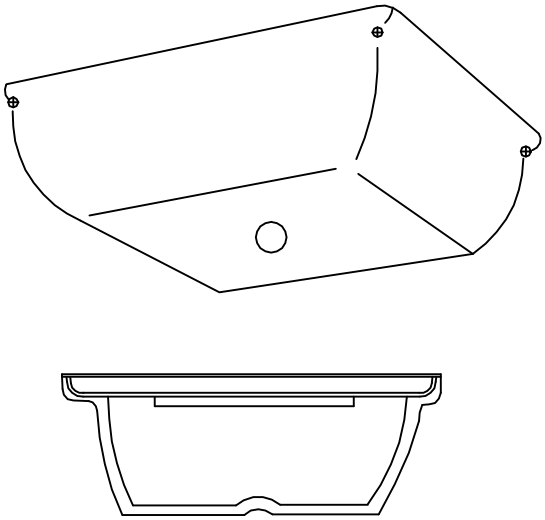

LUMINAIRE REQUIREMENTS

1. 1.4mm MINIMUM THICK MARINE GRADE ALUMINUM BACK PLATE.
2. POLYCARBONATE PRISMATIC OR OPAL LENS HELD IN PLACE WITH 4 STAINLESS STEEL SCREWS.
3. FULLY GASKETED AROUND LENS AND BETWEEN LUMINAIRE AND CEILING WITH DOUBLE BAKED NEOPRENE GASKETS.
4. UL LISTED FOR WET LOCATIONS.
5. MOUNT BACKPLATE TO CEILING WITH 110mmø SCREWS OR ANCHORS.
6. PROVIDE WIRING COMPARTMENT SUITABLE FOR USE WITH 60° C WIRE INSULATION.
7. PROVIDE INTERNAL GREEN GROUNDING SCREW.
8. APPROXIMATE DIMENSIONS OF TYPES A, B AND C LUMINAIRES ARE 305mm X 305mm X 150mmD.
9. APPROXIMATE DIMENSIONS OF TYPES D AND E LUMINAIRES ARE 305mm X 305mm X 205mmD.
10. PROVIDE HIGH POWER FACTOR ( $\geq$ .9) ENCASED AND POTTED BALLAST (TYPES B & C).
11. PROVIDE HIGH POWER FACTOR ( $\geq$ .9) ELECTROMAGNETIC BALLAST (TYPES D & E).

TYPE A – 2 60W INCANDESCENT

TYPE B – 1 35W HPS

TYPE C – 1 70W HPS

TYPE D – 2 F7/T4 TWIN TUBE COMPACT FLUORESCENT (–18° C)

TYPE E – 2 F13/T4 TWIN TUBE COMPACT FLUORESCENT (0° C)

# CEILING–MOUNTED VANDAL–RESISTANT LUMINAIRE

| SKETCH DATE | NOVEMBER 1995 | STYLE | NL–46 |
|---|---|---|---|

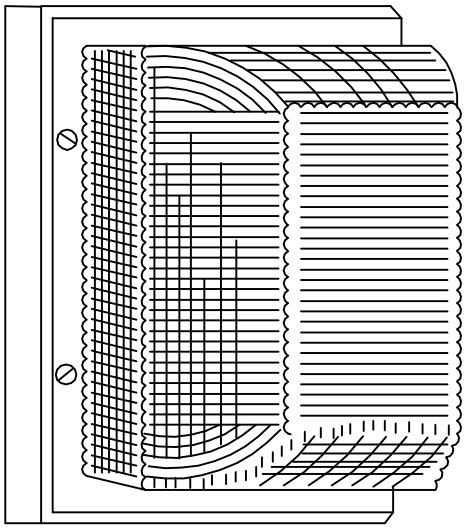

LUMINAIRE REQUIREMENTS

1. 2.0mm MINIMUM THICK MARINE GRADE ALUMINUM OR POLYCARBONATE BACK PLATE.
2. POLYCARBONATE PRISMATIC DIFFUSER HELD IN PLACE WITH STAINLESS STEEL SCREWS.
3. FULLY GASKETED AROUND LENS AND BETWEEN WALL AND LUMINAIRE WITH DOUBLE BAKED NEOPRENE GASKETS.
4. UL LISTED FOR WET LOCATIONS.
5. MOUNT BACKPLATE TO WALL WITH 110mmø SCREWS OR ANCHORS.
6. PROVIDE INTERNAL GREEN GROUNDING SCREW.
7. APPROXIMATE DIMENSIONS OF TYPES A, B AND C LUMINAIRES 230mmH X 150mmW X 150mmD.
8. APPROXIMATE DIMENSIONS OF TYPES D AND E LUMINAIRES 230mmH X 230mmW X 180mmD.
9. PROVIDE HIGH POWER FACTOR ( $\geq$ .9) ELECTROMAGNETIC BALLAST (TYPES B & C).
10. PROVIDE HIGH POWER FACTOR ( $\geq$ .9) ENCASED AND POTTED BALLAST (TYPES D & E).

TYPE A – 1 75W INCANDESCENT

TYPE B – 2 F7/T4 TWIN TUBE COMPACT FLUORESCENT (–18° C)

TYPE C – 2 F9/T4 TWIN TUBE COMPACT FLUORESCENT (–4° C)

TYPE D – 1 35W HPS

TYPE E – 1 70W HPS

# WALL–MOUNTED VANDAL–RESISTANT LUMINAIRE

| | | | |
|---|---|---|---|
| SKETCH DATE | NOVEMBER 1995 | STYLE | NL–47 |

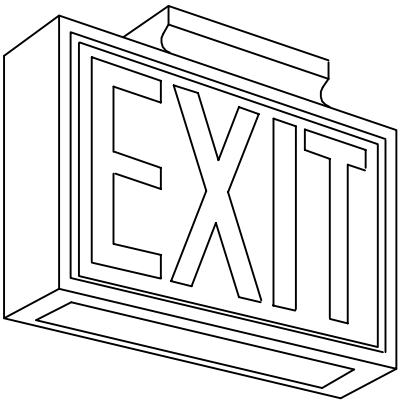


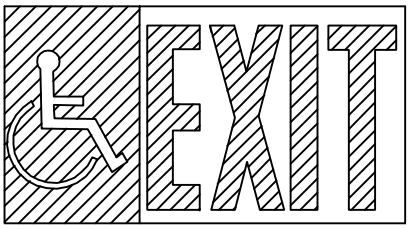


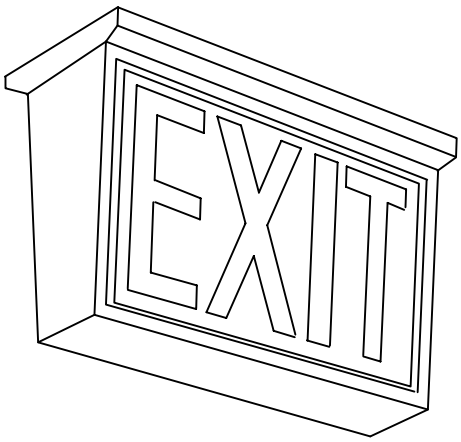


LUMINAIRE REQUIREMENTS

1. LETTERS SHALL BE 150mm TALL WITH 20mm STROKES FORMED BY A STENCIL FACE.
2. PROVIDE RED FIBERGLASS PANEL BEHIND STENCIL FACE.
3. PROVIDE 2 F5/T4 OR 2 F7/T4 TWIN TUBE COMPACT FLUORESCENT LAMPS.
4. PROVIDE DOWN LIGHT PANEL IN FIXTURE. (TYPE A ONLY)
5. PROVIDE ILLUMINATED ARROWS AS INDICATED ON PLANS.
6. PROVIDE SINGLE OR DOUBLE FACE AS INDICATED ON PLANS.
7. PROVIDE CEILING, END WALL, BACK WALL OR PENDANT MOUNTING AS INDICATED ON PLANS.
8. UNITS MOUNTED EXPOSED TO THE ENVIRONMENT SHALL HAVE A DAMP OR WET UL LABEL AS APPROPRIATE AND SHALL NOT BE CONSTRUCTED OF STEEL.
9. PROVIDE INTERNAL GREEN GROUNDING SCREW, OR ATTACHED GROUND LEAD.
10. PROVIDE INTERNATIONAL SYMBOL OF ACCESS ON SIGN WHEN INDICATED.
11. PROVIDE HIGH POWER FACTOR ( $\geq$ .9) ELECTROMAGNETIC BALLAST.

TYPE A – ALUMINUM, STEEL OR POLYCARBONATE HOUSING, PAINTED MATTE BLACK WITH STENCIL FACE. (SEE NOTE 8)

TYPE B – PLASTIC HOUSING ENCLOSED IN POLYCARBONATE WITH STENCIL ON INSIDE OF POLYCARBONATE HOUSING. (SEE NOTE 8)

TYPE C – VANDAL RESISTANT POLYCARBONATE HOUSING WITH DAMP LABEL.

# FLUORESCENT EXIT SIGN

| SKETCH DATE | NOVEMBER 1995 | STYLE | NL–48 |
|---|---|---|---|

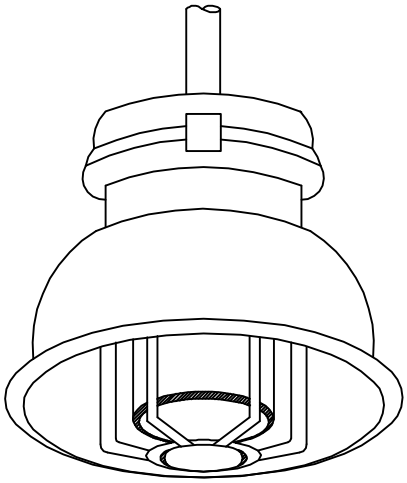

TYPES B & D
(SHOWN WITH DOME REFLECTOR)

TYPE A – 2–F9/T4 TWIN TUBE COMPACT FLUORESCENT LUMINAIRES RATED FOR CLASS 1 DIVISION 1 GROUP D ATMOSPHERE.

TYPE B – 2–F9/T4 TWIN TUBE COMPACT FLUORESCENT LUMINAIRES RATED FOR CLASS 1 DIVISION 2 GROUP D ATMOSPHERE.

TYPE C – 70–250 WATT HPS OR 175–400 WATT METAL HALIDE LUMINAIRE RATED FOR CLASS 1 DIVISION 1 GROUP D ATMOSPHERE.

TYPE D – 70–250 WATT HPS OR 175–400 WATT METAL HALIDE LUMINAIRE RATED FOR CLASS 1 DIVISION 2 GROUP D ATMOSPHERE.

LUMINAIRE REQUIREMENTS

1. LUMINAIRE SHALL MEET UL 844 OR FACTORY MUTUAL (FM) STANDARD FOR HAZARDOUS LOCATIONS.
2. HOUSING SHALL BE COPPER FREE CAST ALUMINUM WITH LACQUER, EPOXY OR POLYESTER POWDER FINISH.
3. ALL JOINTS SHALL BE OF THE THREADED TYPE (TYPES A & C).
4. HEAT AND IMPACT RESISTANT PRESTRESSED GLASS GLOBE.
5. PROVIDE WHITE PORCELAIN ENAMEL STEEL, FIBERGLASS REINFORCED POLYESTER OR GLASS COATED DOME REFLECTOR.
6. PROVIDE GLOBE GUARD WHEN INDICATED.
7. PROVIDE LAMPS AS INDICATED.
8. MOUNTING AS INDICATED.
9. PROVIDE INTERNAL GREEN GROUNDING SCREW.
10. PROVIDE HIGH POWER FACTOR ( $\geq$ .9) ELECTROMAGNETIC BALLAST FOR TYPES A & B LUMINAIRES.
11. PROVIDE HIGH POWER FACTOR ( $\geq$ .9) CORE AND COIL BALLAST FOR TYPES C & D LUMINAIRES.

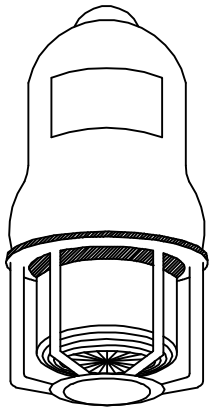

TYPES A & C

# EXPLOSION–PROOF LUMINAIRE

| SKETCH DATE | FEBRUARY 1996 | STYLE | NL–49 |
|---|---|---|---|

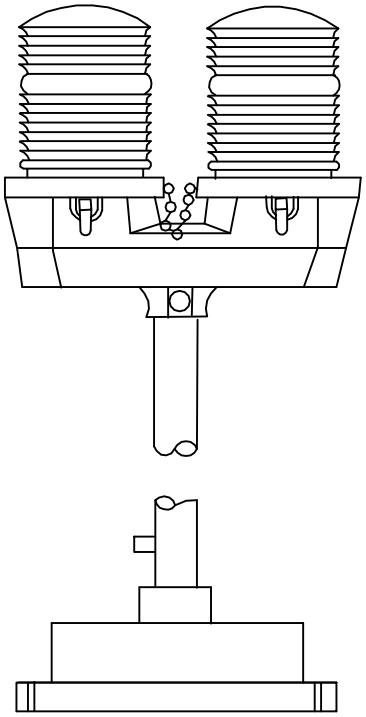

LUMINAIRE REQUIREMENTS

1. LUMINAIRE SHALL MEET FEDERAL AVIATION ADMINISTRATION SPECIFICATIONS FOR OBSTRUCTION LIGHTING (L–810).

2. CAST ALUMINUM HOUSING.

3. ONE PIECE 360° RED HEAT RESISTANT GLASS FRESNEL GLOBE. PROVIDE TOGGLE TYPE LATCHES AND CLAMPING TO SECURE GLOBES. PROVIDE SAFETY CHAINS ON GLOBES.

4. MOUNT PHOTO ELECTRIC CONTROL TO CONTROL LAMPS.

5. MOUNT LUMINAIRE ON 25mm RIGID STEEL CONDUIT. PROVIDE JUNCTION BOX AND MOUNTING PLATE AT BASE UNLESS INDICATED OTHERWISE.

6. LAMPS SHALL BE RATED 100 WATT 130 VOLT. MULTIPLE, MEDIUM BASE. TWO LAMPS ARE REQUIRED.

7. PROVIDE INTERNAL GREEN GROUNDING SCREW.

# OBSTRUCTION LIGHT

| | | | |
|---|---|---|---|
| SKETCH DATE | NOVEMBER 1995 | STYLE | NL–50 |

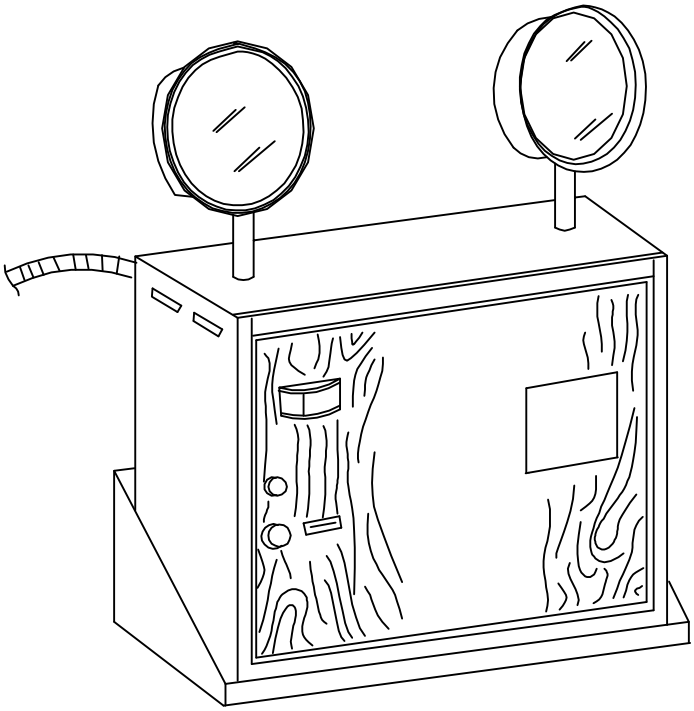

LUMINAIRE REQUIREMENTS

1. SEALED BATTERY, SPECIFICALLY DESIGN FOR EMERGENCY LIGHTING, SOLID STATE FULLY AUTOMATIC – THREE RATE CHARGER FOR NICKEL CADMIUM BATTERY AND TWO RATE HIGH/LOW CHARGER FOR LEAD CALCIUM OR LEAD ACID SEALED BATTERIES.
2. MINIMUM 0.8mm THICK STEEL HOUSING WITH BAKED ENAMEL PAINTED FINISH (BROWN OR BEIGE), OR NONMETALLIC PLASTIC HOUSING.
3. TEST SWITCH
4. "AC ON" PILOT LIGHT.
5. AUTOMATIC OVERLOAD PROTECTION – FUSE OR CIRCUIT BREAKER.
6. HEADS SHALL BE FULLY ADJUSTABLE VERTICALLY AND HORIZONTALLY.
7. SEALED BEAM HALOGEN PAR–36 LAMPS, MINIMUM 12 WATT OR 20 WATT AS INDICATED.
8. INPUT VOLTAGE AS INDICATED.
9. VOLTMETER.
10. 3/C #16, SO CORD SET – (HARD WIRE TO CIRCUIT)
11. PROVIDE MINIMUM 0.8mm THICK STEEL WALL MOUNTING SHELF, OR MOUNTING BRACKETS OR HOLES IN HOUSING FOR MOUNTING UNIT ON WALL.
12. LOW VOLTAGE, DEEP DISCHARGE DISCONNECT.
13. PROVIDE INTERNAL GREEN GROUNDING SCREW.

# EMERGENCY LIGHTING UNIT

| | | | |
|---|---|---|---|
| SKETCH DATE | SEPTEMBER 1997 | STYLE | NL–51 |

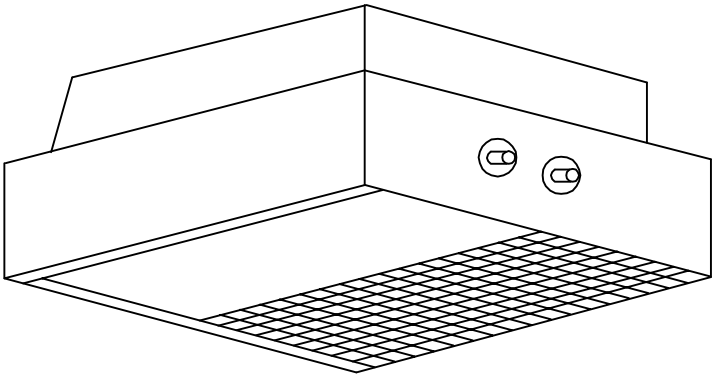

LUMINAIRE REQUIREMENTS

1. HOUSING – STEEL PAINTED SATIN BLACK HOUSING AND MATTE WHITE FRAME OR IMPACT AND FIRE RESISTANT POLYCARBONATE OR THERMOPLASTIC. PROVIDE INTERNAL GREEN GROUNDING SCREW.

2. LENS SHALL BE PRISMATIC ACRYLIC APPROXIMATELY 230mm X 230mm. REFLECTOR SHALL BE SPECULAR OR POLISHED ALZAK ALUMINUM.

3. BATTERY SHALL BE MAINTENANCE FREE, 6 VOLT NICKEL CADMIUM OR LEAD ACID WITH MINIMUM LIFE EXPECTANCY OF 5 YEARS.

4. UNIT SHALL HAVE SOLID STATE AUTOMATIC REGULATED CHARGER, CAPABLE OF FULLY RECHARGING IN 24 HOURS. PROVIDE WITH CHARGE INDICATING LIGHT.

5. SWITCHING AND CONTROLS – AUTO TRANSFER SWITCH, TEST SWITCH, SHORT CIRCUIT PROTECTION AND LOW VOLTAGE, DEEP DISCHARGE DISCONNECT.

6. LAMPS – MINIMUM – TWO 6 WATT TUNGSTEN HALOGEN LAMPS, OR ONE 10 WATT TUNGSTEN HALOGEN LAMP AS INDICATED.

7. SUITABLE FOR WALL OR CEILING MOUNTING.

LENS TYPE
EMERGENCY LIGHTING UNIT

| | | | |
|---|---|---|---|
| SKETCH DATE | NOVEMBER 1995 | STYLE | NL–52 |

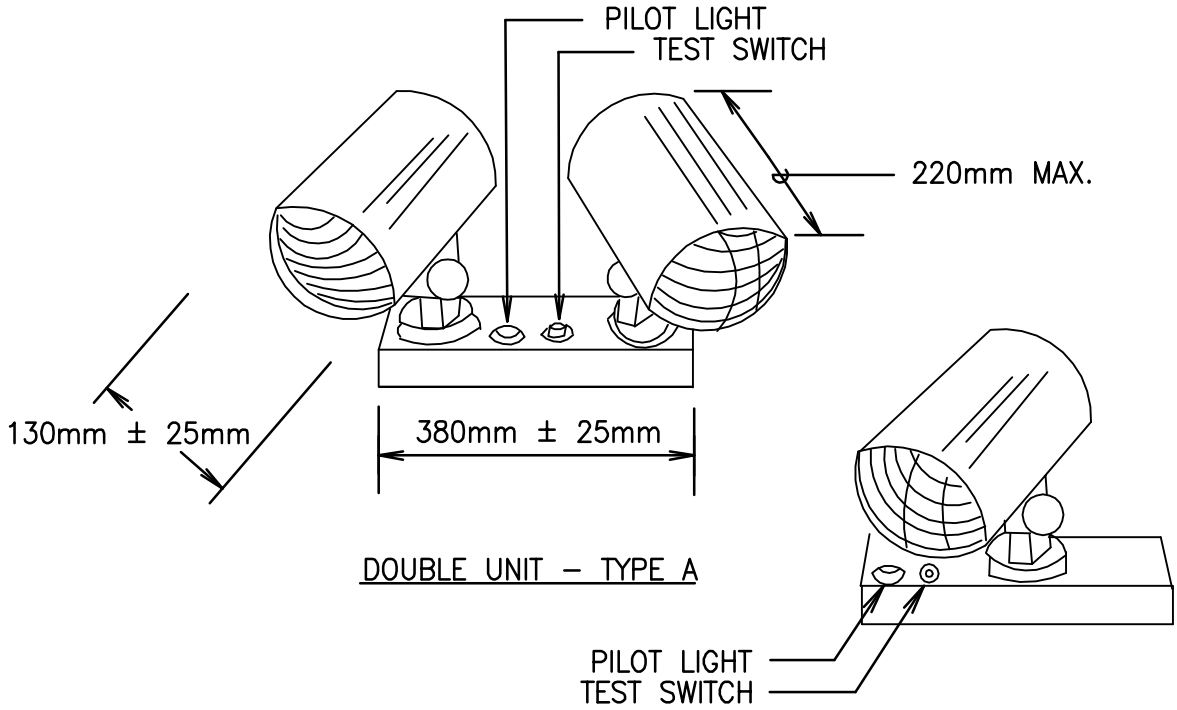


SINGLE UNIT – TYPE B

LUMINAIRE REQUIREMENTS

1. ALUMINUM FINISHED CHANNEL MOUNTING BASE WITH TEST SWITCH AND PILOT OR HIGH RATE INDICATING LIGHT. PROVIDE INTERNAL GREEN GROUNDING SCREW.
2. CYLINDERS FOR LIGHTS AND BATTERY AND CHARGER SHALL BE PAINTED MATTE WHITE AND SHALL BE FULLY ADJUSTABLE.
3. BATTERY SHALL BE MAINTENANCE FREE NICKEL CADMIUM OR SEALED LEAD ACID.
4. UNIT SHALL HAVE AUTOMATIC SOLID STATE CHARGER.
5. SWITCHING AND CONTROLS – COMPLETELY SOLID STATE WITH AUTO TRANSFER AND LOW VOLTAGE CUTOFF. TEST SWITCH AND HIGH RATE INDICATING LIGHT.
6. MINIMUM 6 WATT TUNGSTEN HALOGEN LAMP.
7. BATTERY SHALL HAVE FULL 5 YEAR WARRANTY.

CYLINDER TYPE
EMERGENCY LIGHTING UNIT

| | | | |
|---|---|---|---|
| SKETCH DATE | NOVEMBER 1995 | STYLE | NL–53 |

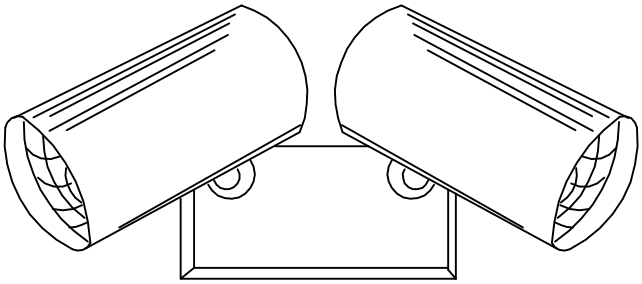

TYPE – A

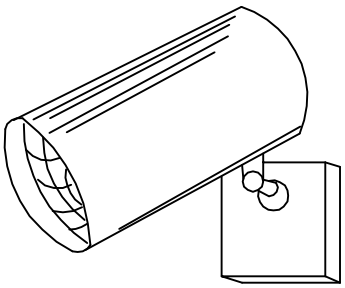

TYPE – B

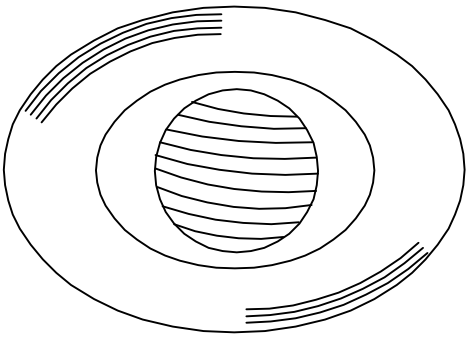

TYPE – C

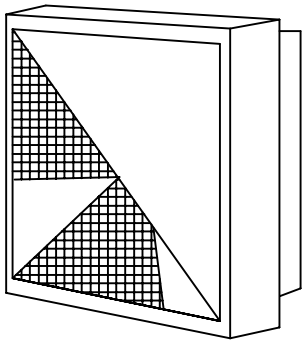

TYPE – D

REMOTE EMERGENCY LIGHTING UNITS

NOTES:

1. LAMPS AND FINISHES SHALL BE COMPATIBLE WITH PRIMARY UNIT WITH WHICH USED.

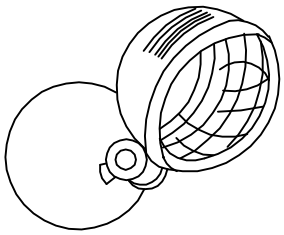

TYPE – E

# REMOTE FIXTURES FOR USE WITH BATTERY UNIT

| | | | |
|---|---|---|---|
| SKETCH DATE | NOVEMBER 1995 | STYLE | NL–54 |

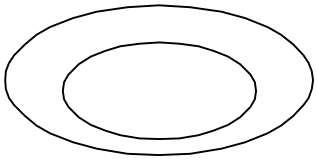

TYPE A FLAT GLASS DIFFUSER

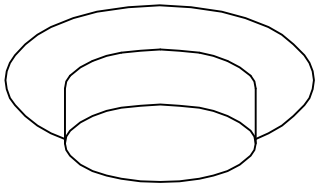

TYPE B DROP OPAL ACRYLIC SHATTER RESISTANT DIFFUSER

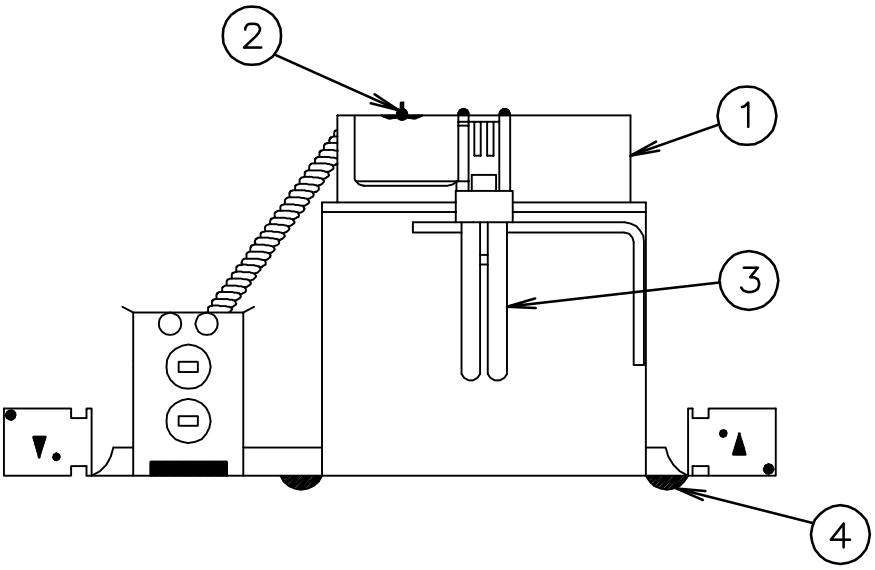


LUMINAIRE REQUIREMENTS

1. PAINTED STEEL HOUSING – APPROX. 205mm DIA. X 205mm HIGH. PROVIDE INTERNAL GREEN GROUNDING SCREW.
2. HIGH POWER FACTOR ( $\geq$ .9) ELECTROMAGNETIC BALLAST.
3. F13/T4 DOUBLE TWIN TUBE COMPACT FLUORESCENT LAMP.
4. FACE TRIM – SATIN ALUMINUM OR MATTE WHITE ENAMEL (GASKETED) AS INDICATED.

5. FIXTURE SHALL BE UL LISTED FOR DAMP LOCATIONS.

6. DIFFUSER 205mm O.D. ± 25mm.

# RECESSED SHOWER LIGHT

| | | | |
|---|---|---|---|
| SKETCH DATE | NOVEMBER 1995 | STYLE | NL–56 |

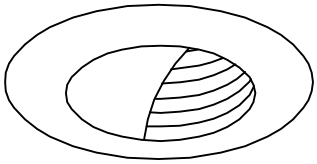

WALL WASHER
TYPE A

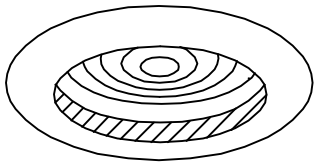

LENS W/STEPPED BAFFLE
TYPE B

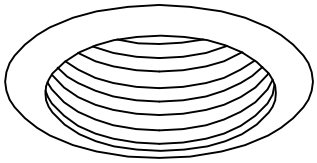

BAFFLE
TYPE C

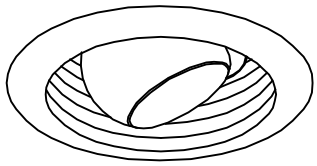

BAFFLE EYEBALL
TYPE D

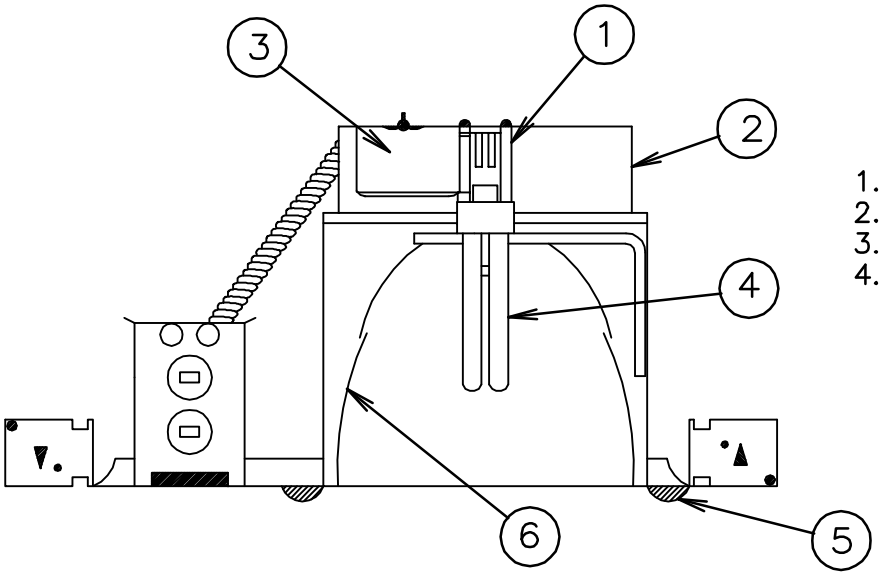


LAMP
OPTIONS

1. 50W PAR–30/H/SP
2. 60W A–19
3. 90W A–21
4. F13/T4 DOUBLE TWIN TUBE COMPACT FLUORESCENT

LUMINAIRE REQUIREMENTS

① PORCELAIN SOCKET FOR INCAND. LAMP WHEN INDICATED.
② PAINTED STEEL HOUSING – APPROX. 205mm DIA. X 205mm HIGH. PROVIDE INTERNAL GREEN GROUNDING SCREW.
③ HIGH POWER FACTOR ( $\geq$ .9) ELECTROMAGNETIC BALLAST (LAMP OPTION 4).
④ COMPACT FLUORESCENT LAMP WHEN INDICATED.
⑤ FACE TRIM – MATTE WHITE ENAMEL.
⑥ ALUMINUM REFLECTOR.
7. FIXTURE SHALL BE UL LISTED.
8. APERTURE APPROX. 205mm O.D.

RECESSED DOWNLIGHT
INCANDESCENT/FLUORESCENT

| SKETCH DATE | NOVEMBER 1995 | STYLE | NL–57 |
|---|---|---|---|

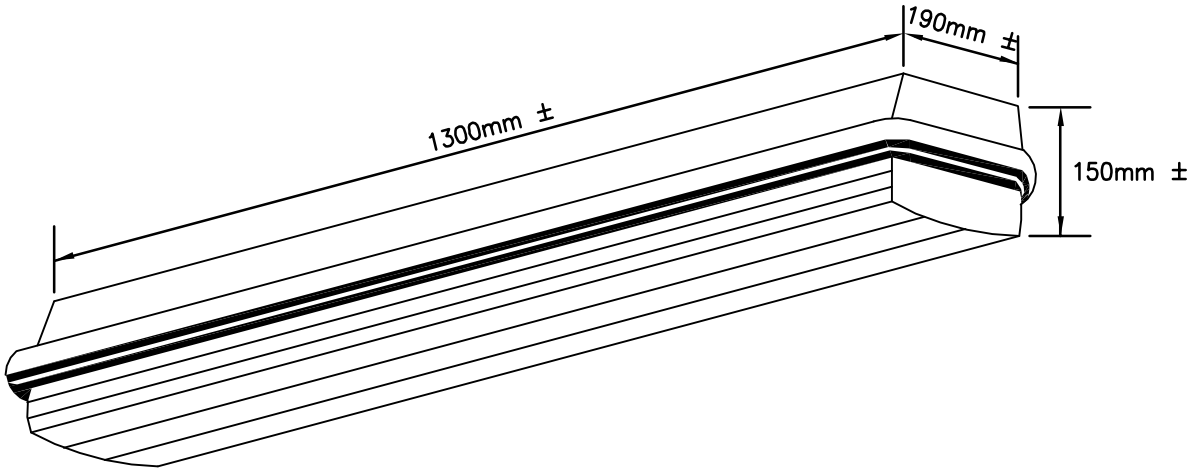


LUMINAIRE REQUIREMENTS

1. LUMINAIRE SHALL MEET U.L. 595 AND U.L. 844.
2. LUMINAIRE SHALL BE SUITABLE FOR CLASS I, DIVISION 2, GROUPS A, B, C, AND D LOCATIONS, AND U.L. LISTED FOR DAMP AND WET LOCATIONS.
3. HOUSING – COPPER FREE ALUMINUM, STAINLESS STEEL, OR HEAT AND IMPACT RESISTANT FIBERGLASS REINFORCED POLYESTER.
4. HEAT AND IMPACT RESISTANT CLEAR ACRYLIC LENS OR ULTRA–VIOLET RESISTANT CLEAR POLYCARBONATE LENS.
5. BALLAST SHALL BE HIGH POWER FACTOR ( $\geq$ .95) INSTANT START CLASS P ELECTRONIC BALLAST WITH A SOUND RATING OF "A".
6. PROVIDE 2 F32/T8 LAMPS.
7. LUMINAIRE SHALL BE COMPLETELY PREWIRED.
8. PROVIDE INTERNAL GREEN GROUNDING SCREW.
9. LUMINAIRE SHALL BE SUITABLE FOR PENDANT OR SURFACE MOUNTING.
10. LUMINAIRE SHALL HAVE SPRING LOADED SOCKETS.

"CLASS I, DIVISION 2 LUMINAIRE"

| INDUSTRIAL FLUORESCENT – HAZARDOUS LOCATION | | | |
|---|---|---|---|
| SKETCH DATE | NOVEMBER 1995 | STYLE | NL–60 |

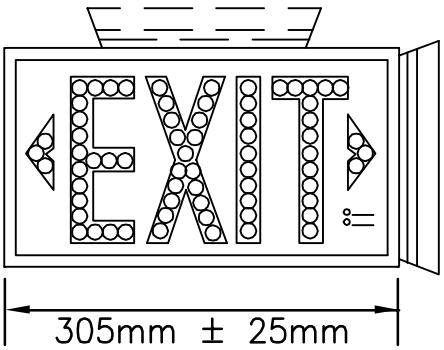


FRONT VIEW

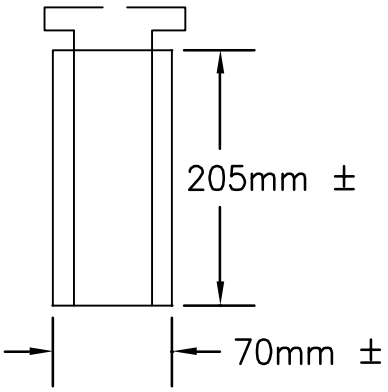


END VIEW

NOTES:

1. UNIT NOT AVAILABLE WITH WET LABEL.
2. UNIT IS AVAILABLE WITH DAMP LABEL.

LUMINAIRE REQUIREMENTS

1. ALUMINUM, STEEL, THERMOPLASTIC OR POLYCARBONATE HOUSING.
2. BRUSHED ALUMINUM, THERMOPLASTIC OR STEEL STENCIL WITH LETTERS 150mm TALL AND 20mm WIDE STROKES AND PUNCH-OUT FACE, FOR LED'S OR INTERNAL LED ILLUMINATION.
3. RED ILLUMINATION PROVIDED BY LIGHT EMITTING DIODES (LED). APPROXIMATELY 60 LED'S PER FACE. (THIS QUANTITY DOES NOT APPLY TO INTERNALLY ILLUMINATED SIGNS.)
4. CLEAR PROTECTIVE NON-BREAKABLE LENS TO PROTECT LED'S. (NOT REQUIRED FOR INTERNALLY ILLUMINATED SIGNS.)
5. PROVIDE POWER FAILURE, BROWN OUT PROTECTION AND SURGE PROTECTION.
6. PROVIDE NI-CAD BATTERY POWER AND SOLID STATE TYPE CHARGER.
7. PROVIDE UNIVERSAL ARROWS AND BLANK OFF PLATES.
8. PROVIDE SINGLE OR DOUBLE FACE AS INDICATED.
9. PROVIDE UNIVERSAL MOUNTING.
10. UNITS MOUNTED EXPOSED TO THE ELEMENTS OR IN CLASSIFIED AREAS SHALL HAVE UL LABEL AS INDICATED.
11. PROVIDE INTERNAL GREEN GROUNDING SCREW.
12. PROVIDE TEST BUTTON IN BOTTOM OF HOUSING.
13. PROVIDE INDICATOR LIGHTS IN FACE TO INDICATE WHEN UNIT IS ON NORMAL POWER OR ON BATTERY POWER.
14. HOUSING SHALL HAVE A MATTE BLACK FINISH, EXCEPT AS INDICATED OTHERWISE.

# LIGHT EMITTING DIODE EXIT SIGN

| | | | |
|---|---|---|---|
| SKETCH DATE | NOVEMBER 1997 | STYLE | NL-61 |

# LIGHTING FIXTURE SCHEDULE

| FIXTURE SYMBOL | STYLE NO. & TYPE | NUMBER AND TYPE OF LAMPS | VOLTAGE | MOUNTING | NOTES |
|---|---|---|---|---|---|
| A | NL–2, TYPE B | 2–F32/T8 | 120 | SURFACE CEILING | |
| B | NL–3, TYPE C | 2–F32/T8 | 120 | RECESSED CEILING | 2 |
| C | NL–3, TYPE A | 2–F40/T5 LONG TWIN TUBE | 120 | RECESSED CEILING | |
| D | NL–8, TYPE B | 2–F32/T8 | 120 | SURFACE CEILING | OPTION 2, 1 |
| E | NL–3, TYPE E | 3–F32/T8 | 120 | RECESSED CEILING | 3 |
| F | NL–61 | LED | 120 | WALL MTD. 2400mm AFF | |
| G | NL–17, TYPE B | 2–F13/T4 TWIN TUBE | 120 | RECESSED CEILING | |

1. PROVIDE ELECTRONIC LOW TEMPERATURE BALLAST.
2. PROVIDE ELECTROMAGNETIC ENERGY–SAVING BALLAST.
3. PROVIDE TWO BALLASTS FOR MULTILEVEL SWITCHING.

NOTE TO DESIGNER:
ENSURE THAT LIGHTING DETAILS AND SCHEDULE ARE PROPERLY COORDINATED WITH SPECIFICATION TO PROVIDE CORRECT BALLAST FOR EACH FIXTURE TYPE. (I.E. ELECTROMAGNETIC, ELECTRONIC, ELECTROMAGNETIC LOW TEMPERATURE OR ELECTRONIC LOW TEMPERATURE)

SAMPLE LIGHTING FIXTURE SCHEDULE

SKETCH DATE NOVEMBER 1995 | STYLE

NL–99