ENGINEERING AND DESIGN TEXTBOOK

FERRY TERMINALS AND SMALL CRAFT BERTHING FACILITIES

(FORMERLY MIL-HDBK-1025/5)

SEPTEMBER 1988

MIL-HDBK-1025/5
30 SEPTEMBER 1988
SUPERSEDING
NAVFAC DM-25.5
JULY 1981

MILITARY HANDBOOK

FERRY TERMINALS AND SMALL CRAFT

BERTHING FACILITIES

AMSC N/A

DISTRIBUTION STATEMENT A. APPROVED FOR PUBLIC RELEASE: DISTRIBUTION IS UNLIMITED

AREA FACR

ABSTRACT

Basic criteria for design of small craft berthing facilities, ferry terminals, and degaussing and deperming facilities are presented herein for use by experienced port, coastal, and construction engineers and constructors. The contents cover general siting, layout, and environmental considerations and requirements, specific criteria for design of small craft berthing systems, ferry terminals, support facilities, protective structures and features, and major design problems associated therewith.

FOREWORD

This handbook has been developed from an evaluation of facilities in the shore establishment, from surveys of the availability of new materials and construction methods, and from selection of the best design practices of the Naval Facilities Engineering Command (NAVFACENGCOM), other Government agencies, and the private sector. This handbook was prepared using, to the maximum extent feasible, national professional society, association, and institute standards. Deviations from these criteria, in the planning, engineering, design, and construction of Naval shore facilities, cannot be made without prior approval of NAVFACENGCOM Headquarters (Code 04).

Design cannot remain static any more than can the functions it serves or the technologies it uses. Accordingly, recommendations for improvement are encouraged and should be furnished to Commander, Atlantic Division, Naval Facilities Engineering Command, Code 04A4, Norfolk, Virginia 23511-6287; phone commercial (804) 444-9970.

THIS HANDBOOK SHALL NOT BE USED AS A REFERENCE DOCUMENT FOR PROCUREMENT OF FACILITIES CONSTRUCTION. IT IS TO BE USED IN THE PURCHASE OF FACILITIES ENGINEERING STUDIES AND DESIGN (FINAL PLANS, SPECIFICATIONS, AND COST ESTIMATES). DO NOT REFERENCE IT IN MILITARY OR FEDERAL SPECIFICATIONS OR OTHER PROCUREMENT DOCUMENTS.

PIERS AND DOCKSIDE FACILITIES CRITERIA MANUALS

Criteria Manual	Title	PA
MIL-HDBK-1025/l	Piers and Wharves	LANTDIV
MIL-HDBK-1025/2	Dockside Utilities for Ship Service	LANTDIV
MIL-HDBK-1025/3	Cargo Handling Facilities	LANTDIV
MIL-HDBK-1025/4	Seawalls, Bulkheads, and Quaywalls	LANTDIV
MIL-HDBK-1025/5	Ferry Terminals and Small Craft Berthing Facilities	LANTDIV
MIL-HDBK-1025/6	General Criteria for Waterfront Construction	LANTDIV

NOTE: Design manuals, when revised, will be converted to military handbooks.

This handbook is issued to provide immediate guidance to the user. However, it may or may not conform to format requirements of MIL-HDBK-1006/3 and will be corrected on the next update.

FERRY TERMINALS AND SMALL CRAFT BERTHING FACILITIES

CONTENTS

			Page
Section	1	INTRODUCTION	
	1.1	Scope	1
	1.2	Cancellation	1
Section	2	SMALL CRAFT BERTHING FACILITIES	
	2.1	Planning and Layout Criteria	2
	2.1.1	Siting	2
	2.1.1.1	Berthing Craft	2
	2.1.1.2	Ramps	2
	2.1.1.3	Boat Fueling Docks	2
	2.1.1.4	Dry Storage	2
	2.1.1.5	Boat Repair	2
	2.1.1.6	Harbor Administration	2
	2.1.1.7	Vehicular Parking	2
	2.1.1.8	Guest Docks	2
	2.1.2	Space Requirements	3
	2.1.2.1	Berthing Basins	3
	2.1.2.2	Land Area	3
	2.1.2.3	Finger Width	3
	2.1.2.4	Water Area	3
	2.1.2.5	Launching Ramp or Hoist	3
	2.1.2.6	Parking Lot	3
	2.1.2.7	Harbor Service Facilities	3
	2.1.3	Berthing Basin Depths	3
	2.1.3.1	Criteria	3
	2.1.3.2	Minimum Depths	3
	2.1.4	Entrance Channel and Structures	5
	2.1.4.1	Channel Alignment	5
	2.1.4.2	Channel Width	5
	2.1.4.3	Channel Depth	5
	2.1.4.4	Jetties	5
	2.1.4.5	Other Protection	5
	2.1.4.6	Aids to Navigation	5
	2.1.5	Turning Area	5
	2.2	Environmental Siting Considerations	5
	2.2.1	Local Weather	5
	2.2.1.1	Precipitation	6
	2.2.1.2	Wind	6
	2.2.1.3	Ice	6
	2.2.1.4	Fog	7
	2.2.2	Wave-Related Factors	7
	2.2.2.1	Swell	7
	2.2.2.2	Surge	7
	2.2.2.3	Tides	7
	2.2.3	Water Area Shoaling	8
	2.2.3.1	Littoral Drift	8
	2.2.3.2	River Discharge	8

PAGE

2.2.3.3	Nearby Water Area Structures	10
2.2.3.4	Redistribution of Bottom Materials	10
2.2.4	Geological Factors	10
2.2.4.1	Basin Excavation	10
2.2.4.2	Foundations and Material Sources	10
2.2.4.3	Seismic Activity	10
2.2.5	Impact on Environment	11
2.3	Design Criteria for the Berthing System	11
2.3.1	Slip and Berth Clearances	11
2.3.1.1	Berth Clearance	11
2.3.1.2	Finger Piers	11
2.3.1.3	Fairway Widths	11
2.3.1.4	Mooring Layouts	11
2.3.1.5	Slip and Berthing Arrangements	12
2.3.1.6	Dimensional Criteria and Typical Details	12
2.3.2	Fixed Versus Floating Pier System	17
2.3.2.1	System Selection	17
2.3.2.2	Selection Criteria	17
2.3.3	Fixed-Pier Berthing Systems	17
2.3.3.1	General Features	17
2.3.3.2	Vertical Loading	18
2.3.3.3	Other Design Criteria	18
2.3.3.4	Typical Construction	18
2.3.4	Floating-Pier Berthing Systems	18
2.3.4.1	General Considerations	18
2.3.4.2	Flotation Materials	20
2.3.4.3	Deck Materials and Surface	21
2.3.4.4	Deck Framing and Float Connections	25
2.3.4.5	Vertical Loading and Deck Levels	26
2.3.4.6	Typical Construction	28
2.3.5	Lateral Loading	28
2.3.5.1	Loading	28
2.3.5.2	Analysis	28
2.3.6	Anchorage Systems	32
2.3.6.1	Selection Criteria	32
2.3.6.2	Systems	32
2.3.7	Approach Piers and Gangways	34
2.3.7.1	General Criteria	34
2.4	Design Criteria for Other Sheltered Basin Structures	37
2.4.1	Perimeter Stabilization	37
2.4.1.1	Objectives	37
2.4.1.2	Structures	37
2.4.2	Perimeter Beach	37
2.4.2.1	Slopes	37
2.4.2.2	Profile	39
2.4.2.3	Design Details	39
2.4.3	Revetted Slope	39
2.4.3.1	Revetments	39

Page

2.4.3.2 Armoring 39
2.4.3.3 Filtering Devices 39
2.4.3.4 Profile 39
2.4.3.5 Design Details 39
2.4.4 Gabioned Slope 39
2.4.4.1 Use 39
2.4.4.2 Construction 39
2.4.4.3 Typical Details 41
2.4.5 Vertical Bulkhead 41
2.4.5.1 Use Criteria 41
2.4.5.2 Types 41
2.4.5.3 Design Details 43
2.4.5.4 General Considerations 43
2.5 Design Criteria for Entrance Channel and Protective Structures 43
2.5.1 Entrance Channel 43
2.5.1.1 Location 43
2.5.1.2 Design Criteria 43
2.5.1.3 Construction 44
2.5.1.4 Maintenance Dredging 44
2.5.2 Breakwaters 44
2.5.2.1 Purpose 44
2.5.2.2 Design Data 44
2.5.2.3 Breakwater Positioning 45
2.5.2.4 Design Factors 45
2.5.2.5 Types 45
2.5.2.6 Rubble-Mound Construction 48
2.5.2.7 Design Details 50
2.5.3 Groins 50
2.5.3.1 Purpose 50
2.5.3.2 Types 50
2.5.3.3 Design Criteria 50
2.5.4 Jetties 50
2.5.4.1 Purpose 50
2.5.4.2 Types 52
2.5.4.3 Details 52
2.5.5 Wave and Surge Dissipators 52
2.5.5.1 Purpose 52
2.5.5.2 Typical Devices 52
2.5.6 Bank Protection 52
2.5.7 River Protection 52
2.5.7.1 Current Deflector Placed Upstream 52
2.5.7.2 Shallow Basin Excavated into the Riverbank 52
2.5.8 Floating Wave Attenuators 56
2.6 Design Criteria for Support Facilities 56
2.6.1 Utilities 56
2.6.2 Locker Boxes and Fire Equipment 56
2.6.2.1 Locker Boxes 56
2.6.2.2 Firefighting Equipment 56

Page

2.6.3 Fuel Docks and Pump Out Stations 57
2.6.3.1 Fuel Docks 57
2.6.3.2 Pump Out Station 57
2.6.4 Cleats and Fenders 57
2.6.4.1 General 57
2.6.4.2 Cleats 57
2.6.4.3 Fenders 58
2.6.5 Launching Hoists, Elevators, and Ways 58
2.6.5.1 Types 58
2.6.5.2 General Characteristics 59
2.6.5.3 Functional Characteristics of Different Types 59
2.6.5.4 Typical Facility 60
2.6.6 Launching Ramps 60
2.6.6.1 Slope 60
2.6.6.2 Surface 60
2.6.6.3 Approach 60
2.6.6.4 Bottom 60
2.6.6.5 General Features 60
2.6.6.6 Typical Layout 62
2.6.7 Support Buildings and Ancillary Structures 62
2.6.7.1 Administration Building 62
2.6.7.2 Maintenance Building and Yard for Storage 62
2.6.7.3 Boat Repair Facility 62
2.6.7.4 Hardware Supply Store 65
2.6.7.5 Transient Housing Facilities 65
2.6.7.6 Road and Walkway System 65
2.6.7.7 Layout of Utilities 65
2.6.7.8 Perimeter Fencing 65
2.6.8 Dry Storage 65
2.6.8.1 Purpose 65
2.6.8.2 Storage Criteria 65
2.6.8.3 Use Criteria 65
2.6.9 Signs 65
2.7 Environmental Factors and Protection 67
2.7.1 Snow 67
2.7.1.1 Factors 67
2.7.1.2 Protection 67
2.7.2 Ice 67
2.7.2.1 Protection 67
2.7.3 Hurricanes 68
2.7.3.1 Protection for Berthed Facilities 68
2.7.3.2 Protection for Structural Components 68
2.7.3.3 Design Provisions 68
2.7.3.4 Emergency Precautions 68
2.7.4 Oil Spills 68
2.7.5 Floods 69
2.7.5.1 Nature of Damage 69
2.7.5.2 Protection 69
2.8 Summary of Common Design Problems 69
2.8.1 Problems 69
2.8.1.1 Ice 69

Page

2.8.1.2 Corrosive Environment 69
2.8.1.3 Fuel Dispensing 69
2.8.1.4 Floating-Pier Systems 69
2.8.1.5 Shoaling of Channels and Basins 70
2.8.1.6 Boat-Wake Problems 70

Section 3 DEGAUSSING AND DEPERMING FACILITIES
3.1 Degaussing 71
3.2 Deperming 71
3.3 Criteria 71

Section 4 FERRY TERMINALS
4.1 Ferry Terminal 72
4.2 Slips 72
4.3 Fender Racks 72
4.3.1 Design Loadings 72
4.3.2 Construction Details 72
4.4 Ferry Transfer Bridges 72
4.4.1 Operation 72
4.4.2 Design Considerations 72

FIGURES

1 Typical Layout of a Small Craft Harbor 4
2 Maintenance of Entrance to Off-River Basin With Land-Based Equipment (Schematic) 9
3 Typical Small Craft Mooring Layouts 13
4 Typical Berthing Arrangement 14
5 Small Craft Berthing Systems 15
6 Dimensional Criteria for Berthed Craft 16
7 Typical Fixed Finger Pier System 19
8 Various Types of Floats 22
9 Typical Foam Float With Concrete Deck 23
10 Typical Water-Ballasted Floating Dock 24
11 Typical Deck Framing Systems and Float Connections 27
12 Typical Floating Pier System 29
13 Windloading on Small Craft Berthing System 30
14 Variation of Average Profile Height of Berthed Craft with Craft Length 31
15 Sample Calculation for Windloading on a Floating Pier System 33
16 Typical River Anchorage System 35
17 Typical Use of Submerged Crossties to Strengthen Covered Floating System 36
18 Framing and Hinge Detail for Pipe and Rod Plate Hinge for Heavy Gangway 38
19 Typical Beach and Revetted Slope Profiles 40
20 Typical Use of Gabions in Small Craft Harbor Construction 42

Page

21 Typical Rubble-Mound Breakwater 46
22 Typical Cellular Sheet Pile Breakwater Construction 47
23 Typical Swiss-Cheese Perforated Breakwater Construction 49
24 Typical Rubble-Mound Groin Construction 51
25 Typical Sheet Pile Jetty Construction 53
26 Typical Shallow Boat Basin Excavated into Riverbank (Schematic) 54
27 Typical Chained-Log Boom for Short-Period Wave Attenuation 55
28 Typical Hoist-Launching Facility With Dry Storage Yard 61
29 Layout of a Typical Ramp Facility 63
30 Typical Maintenance Building and Yard Layout 64
31 Typical Hinged Floating Launching Ramp Used for Small Boats 66
32 Ferry Terminal 73
33 Fender Rack 74
34 Ferry Transfer Bridge 75

BIBLIOGRAPHY 77

REFERENCES 79

GLOSSARY 80

Section 1: INTRODUCTION

1.1 Scope. This handbook contains planning, layout, design criteria, and problems associated with small craft berthing facilities. It includes a brief description of requirements for ferry terminals and degaussing and deperming facilities as related to waterfront operations.

1.2 Cancellation. This handbook cancels and supersedes NAVFAC DM-25.5, Ferry Terminals and Small Craft Berthing Facilities, July 1981.

Section 2: SMALL CRAFT BERTHING FACILITIES

2.1 Planning and Layout Criteria

2.1.1 Siting. The following general principles shall apply for the proper siting of various components of small craft berthing and berthing facilities.

2.1.1.1 Berthing Craft

a) The larger craft shall generally be berthed near the entrance.

b) The berthing areas of commercial and recreational craft shall generally be separated because of different land use requirements. If possible, commercial boats shall be located near the entrance in a separate basin or across a fairway from the recreational craft.

c) Sailboats without auxiliary power should be berthed in slips that open to leeward of the prevailing winds and that can be reached via wide fairways and channels or routes that permit sailboat tacking with least interference to the powered craft.

2.1.1.2 Ramps. Ramps or hoists for launching trailered craft shall be separated from the berthing areas as far as possible.

2.1.1.3 Boat Fueling Docks. Locate boat fueling docks near the entrance in an area that is protected from waves in the entrance channel. The adjacent land area must be suitable for buried fuel storage tanks and easily accessible for fuel distributing vehicles. The pumpout station shall normally be located in the same area and is located often on or along the fueling dock.

2.1.1.4 Dry Storage. Operational dry storage facility shall be located in accordance with the criteria that apply to launching ramps. The launchings and retrievals in such a facility shall generally be accomplished by hoist rather than by ramp. If the dry storage facility is for off-season layup only, it shall be in a remote area.

2.1.1.5 Boat Repair. The boat repair and servicing yards shall be located in a remote part of the harbor that has adequate navigational access for the largest craft.

2.1.1.6 Harbor Administration. The harbor administration area shall be located near the entrance and guest docks.

2.1.1.7 Vehicular Parking. Vehicle parking lots for the berthing basins shall be located so that no parking space in any lot exceeds about 500 ft (152.4 m) from the head of the pier for the particular lot it is intended to serve. Space requirements must include car with boat trailer.

2.1.1.8 Guest Docks. Identify the need for transient berthing space. Provide supporting facilities as required.

2.1.2 Space Requirements

2.1.2.1 Berthing Basins. For safe maneuvering and navigation of craft, good basin geometry considers adequate clearances for three different classes and for three positions or operations of boats. The three positions or operations of boats are clearances in slips beyond the beam and length of the craft, width of entrance and exit channels, and depth and width of water area for maneuvering to and from slips, that is, the turning basin. The average harbor with all-ship moorage can berth from 15 to 20 boats per acre (equivalent to about 200 m per boat) of navigable water area, including main interior channel, fairways, and slip areas, but not the entrance channel. This general rule shall apply only for an average boat length of 30 to 35 ft (9.1 - 10.6 m) and where good basin geometry can be obtained. Figure 1 represents a typical layout of a small craft harbor and associated berthing facilities.

2.1.2.2 Land Area. The size of land areas is generally about 80 percent of the water area or about 160 m^2 per boat.

2.1.2.3 Finger Width. Because wider fingers are needed for two-boat ships, they will occupy about the same area as that required for single-boat slips.

2.1.2.4 Water Area. When bow-and-stern moorings are used in lieu of slips, about 2 to 4 times as much water area (depending on the water depth) is required, exclusive of fairways and channels. Single-point moorings require about 6 times the area occupied by the same number of bow-and-stern moorings if full-circle clearance is provided.

2.1.2.5 Launching Ramp or Hoist. An average launching ramp or hoist will launch and retrieve about 50 trailered boats on a peak traffic day.

2.1.2.6 Parking Lot. For the normal distribution of small boats, a minimum of three vehicle spaces in the parking lot will be required for every four boats in the berthing area.

2.1.2.7 Harbor Service Facilities. Minimum land area required for harbor service facilities, ancillary facilities, and roads and hardstands is an area approximately equal to the parking area required for berths and operational launchings.

2.1.3 Berthing Basin Depths

2.1.3.1 Criteria. The interior basin depth requirements for small craft berthing shall be determined from DM-26.1, Harbors, and also by reckoning the effect of bottom depth on structures of the berthing system, such as fixed-pier supports, floating pier guide piles and dolphins, and interior wave and surge baffles.

2.1.3.2 Minimum Depths. Assuming that the maximum depression of a boat below the still-water surf will be about 2 ft (.61 m) (due to wave action and scend), the depth shall be at least 2 feet below the keel of the deepest-draft boat at extreme low water.

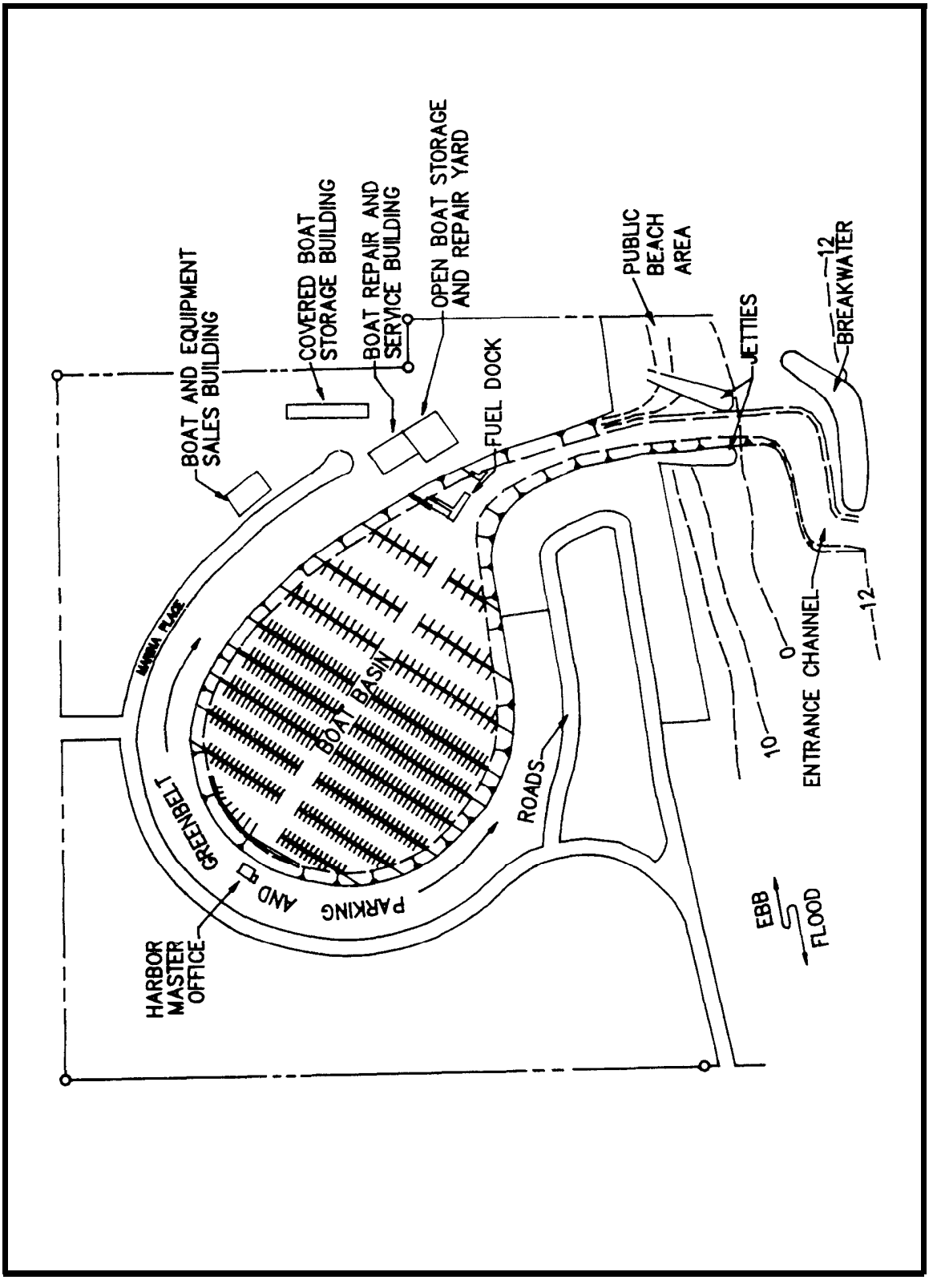

Figure 1
Typical Layout of a Small Craft Harbor

Minimum basin depths shall be as follows:

a)	Main basin channel:	15 feet
b)	Access slips:	12 feet
c)	Berths for boats 30 feet and smaller:	8 feet
d)	Berths for boats 65 feet long:	12 feet
e)	Berths for boats of intermediate lengths:	8 to 12 feet

2.1.4 Entrance Channel and Structures

2.1.4.1 Channel Alignment. The channel alignment shall be as close to the natural channel alignment as possible.

2.1.4.2 Channel Width. The waterside approach to the small craft harbor shall be as wide as possible to permit safe, simultaneous entrance and exit of the widest boat anticipated. For small-boat traffic, allow a minimum width of 150 ft (45.1 m) if the entrance is in line with the main channel. Allow a minimum width of 250 ft (76.2m) if the boat is making an immediate turn inside the boat basin.

2.1.4.3 Channel Depth. Entrance channel depth shall be the sum of draft, vessel squat, one-half of the wave height, and overdepth. An overdepth of 1 ft to 2 ft (.30 - .61 m) in soft material and 2 to 3 ft (.61 - .91 m) in rock is allowed for dredging irregularities. Minimum depths shall range between 6 ft (1.83 m) for boats smaller than 20 ft (6.1 m) long and 15 ft (4.6 m) for boats longer than 60 ft (18.3 m).

2.1.4.4 Jetties. Jetties shall be provided to protect the entrance channel from waves in the basin and from littoral drift entering the channel from the flanking beaches. Spacing of jetties shall accommodate both the entrance channel and a protective berm of appropriate width on either side of the jetty. Jetties shall be constructed from the shore-end outward.

2.1.4.5 Other Protection. Where basin configuration warrants, provide breakwaters, groins, and other basin protection such as basin flushing and access. Refer to para. 2.5 for design guidelines.

2.1.4.6 Aids to Navigation. Refer to DM-26.1 for navigational aids.

2.1.5 Turning Area. For average berthing basin conditions, provide a width of water area for turning, and for entering and leaving slips equal to 2-l/4 times the length of the longest boat. If there is a predominance of single- or twin-screw boats, this criterion shall be 2-l/2 and 2 respectively.

2.2 Environmental Siting Considerations

2.2.1 Local Weather

2.2.1.1 Precipitation

a) Adequate surface drainage shall be provided which is capable of draining the waters resulting from a maximum probable rainfall without eroding the perimeter land, and diverting any possible inflows from the surrounding land or safely through the small craft harbor complex.

b) Where necessary, covered slips shall be provided to keep the craft dry above the waterline, and to shed snow, prevent hailstone damage, and shield the craft from excessive exposure to sunlight.

c) In regions where snowfall is heavy, landside structures and slips shall be designed to carry a heavy snow load or to shed snow.

2.2.1.2 Wind

a) Determine the most severe wind condition that might occur at the site from historical meteorological records. Wind direction and its effect on low speed maneuvering should also be evaluated.

b) Design floating slips to withstand the horizontal thrust of the berthed craft during the design wind condition.

c) Suitable anchorage for the slips shall be provided to prevent drifting of the berthed craft and the entire complex under wind stress.

2.2.1.3 Ice

a) As a precaution against sheet ice damage to boats, specify boat removal from the water in winter to dry storage or, after hoisting out of their slips, leave them suspended above the water surface.

b) Ice damage to fixed and floating slips occurs in three ways:

1) As sheet ice forms, it expands and tends to crush floats and cut into piles.

2) If the water level rises after freezing has begun, the ice sheet hugging the piles exerts an upward force tending to jack them up and thereby reduce penetration into the soil. Repeated freezing and thawing may eventually lift the piles completely out of the soil.

3) Most ice damage is usually caused by the impact of drifting floes on structures as the ice melts in spring.

c) In areas where freezing does not produce a thick ice sheet, ice formation can be prevented near piles, floating slips, and boats by forced convection currents.

d) Drive steel or metal-clad timber piles deep enough in certain foundation soils to develop higher withdrawal resistance so that the ice will slide along the pile as it rises.

e) Floating slips with tapering or round bottoms shall be provided so that the pinching effect of the ice squeezes them upward.

f) To prevent erosion of basin perimeters and revetted slopes by expanding ice sheets, the perimeter slopes shall be provided with smooth concrete lining. Vertical perimeter walls may be pushed back into soil behind them in winter and sprung back when the ice thaws.

g) Deflecting booms made of logs or heavy timbers shall be used to protect the berthing area from drifting ice.

2.2.1.4 Fog. For areas where fog is a significant problem, small craft harbor entrance channels and main fairways should be designed as straight as feasible, so as to be safely navigable in dense fog by following marker buoys and other channel-marking devices with as few turns as possible.

2.2.2 Wave-Related Factors

2.2.2.1 Swell

a) To reduce wave action from the entrance channel and interior basins to acceptable heights, the entrance channel orientation protective breakwaters and jetties, and interior wave-dissipating devices, shall be properly planned and selected.

b) Historical wave data and statistical hindcast data shall be used for orienting the entrance and designing protective structures.

c) Wave-dissipation structures shall be provided to reduce waves to acceptable heights. Criteria for acceptable maximum wave heights are about 2 to 4 feet in the entrance channel, and 1 to 1 l/2 feet in the berthing areas depending on the characteristic of the using craft.

d) Where a small craft harbor opens into the ocean or a large lake, the entrance shall be oriented for a boat to enter without turning broadside to the incoming waves.

2.2.2.2 Surge

a) Surge oscillations in the basin cause stress in mooring lines and anchorage systems, and can make boat maneuvering into slip difficult.

b) Vertical basin walls are usually more desirable than poorly reflective basin perimeters, and rectangular basins are more efficient than irregular shaped basins for berthing arrangements.

c) Most recreational boats in a small craft harbor are insensitive to long-period surging. Larger craft may experience fender and mooring line difficulties under long-period surging.

2.2.2.3 Tides

a) Ocean tides may extend considerable length upstream from the mouth of large rivers and are semi-predictable for most harbor sites. For any

coastal site, it is possible to interpolate predictions for the site from values given in the National Oceanic and Atmospheric Administration Tide Prediction Tables for the two nearest stations.

b) Extremes of the predicted spring tides provide criteria for small craft harbor design accommodating any water level fluctuations that may occur.

2.2.3 Water Area Shoaling Factors

2.2.3.1 Littoral Drift

a) The principal cause of shoaling at entrances to harbors is littoral drift.

b) The longshore movement of sand is due mainly to wave action. Structures that change the normal regimen of waves breaking along a coast may influence the littoral movement.

c) If the approach of the prevailing waves is normal to the shore, the initial effect is movement of the littoral material from the lips inward along each flank of the channel, thereby eroding the lips and shoaling the inner channel. As the process continues, the channel banks accrete toward the center of the channel, fed by material from the beach on either side of the entrance.

d) Where prevailing wave approach is oblique to the shoreline, sediments being transported along the shore by littoral currents will be interrupted at the channel opening near the up drift lip and that lip will soon begin to accrete. As the wave-induced longshore current again begins to impinge on the shore down drift of the channel mouth, it attempts to reacquire its sediment load. As a result, the down drift lip of the channel will erode at about the same rate as the up drift lip accretes, and the channel mouth will migrate in the down drift direction.

e) To minimize entrance shoaling, install jetties along each flank of the entrance channel from the lips of the mouth seaward beyond the breaker zone. Structural features of jetty construction shall prevent the materials from washing through or over the structure into the channel.

2.2.3.2 River Discharge

a) Harbors in off-river basins may undergo shoaling due to sediment deposition in the quiet-water area and eddy currents that may be created by the entrance configuration and the flowing water in the river.

b) To minimize shoaling, provide a flat area on the downstream lip of the entrance from which a dragline can excavate deposits from the bottom of the entrance channel, and cast the deposits into the river downstream from the entrance. A permit from the State Marine Resources Commission and the Corps of Engineers is required for water disposal of the excavated deposits. The entrance shall be maintained narrow to permit such an operation. A training dike installed off the upstream will reduce sediment deposition. (See Figure 2.)

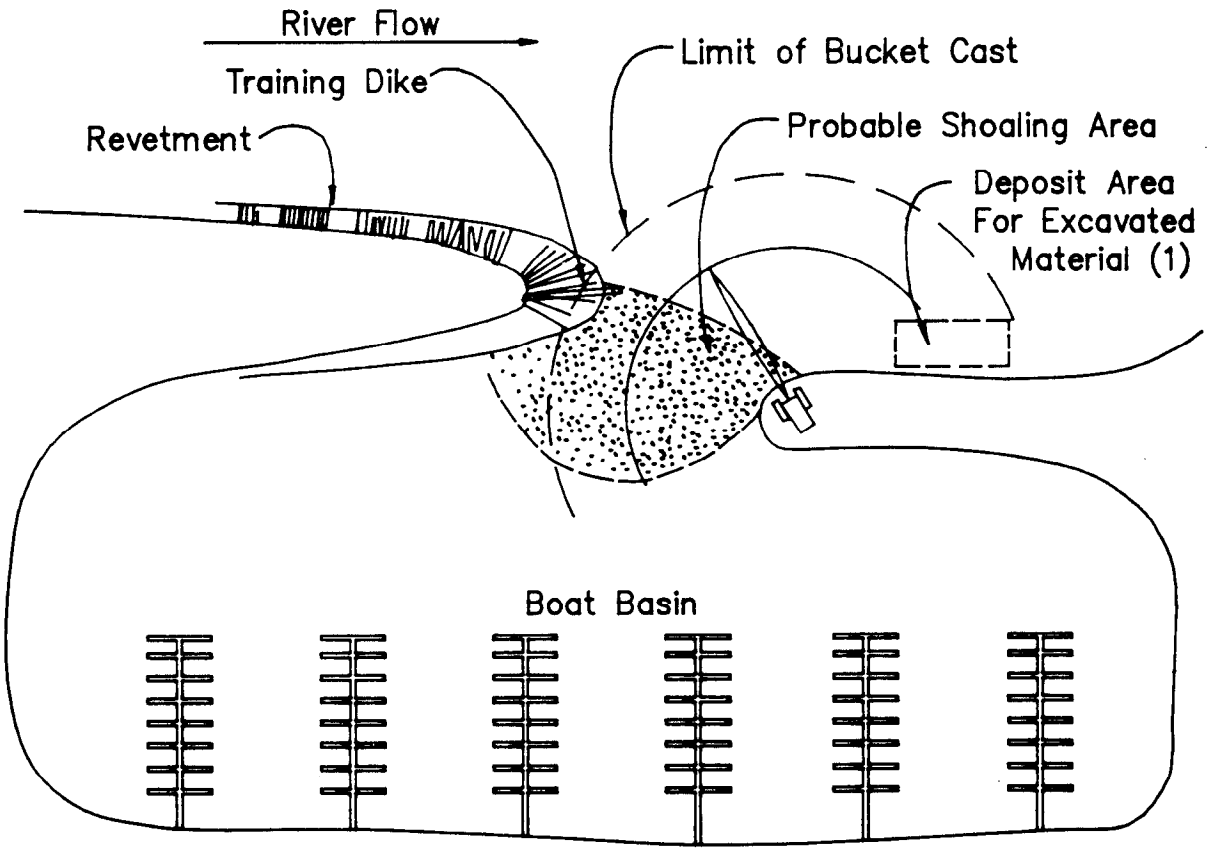

(1) Permit required from Corps of Engineers for water disposal of excavated material.

Figure 2
Maintenance of Entrance to Off-River Basin
With Land-Based Equipment (Schematic)

2.2.3.3 Nearby Water Area Structures

a) Structures in the water area outside the harbor entrance may cause shoaling, especially along shorelines where littoral transport is a problem. This type of structure tends to impound sediments.

b) Periodic maintenance operations at another harbor located up drift from the problem harbor may result in deposition of excessive sediment transported downcoast toward it.

c) On rivers, any structure upstream or across from the harbor may alter the current flow and cause excessive shoaling at the harbor site.

2.2.3.4 Redistribution of Bottom Materials

a) Shifting of bottom materials in some water areas by natural processes such as wind waves within the water area, may cause redeposition of these materials in navigation channel and harbor entrances. This will cause the channel characteristics to continually change, requiring channel marking with buoys, and redredging to maintain navigability.

b) Rivers meander from flood plain and delta aggradation. River flow continuously erodes material from concave bends where currents concentrate. The material is then deposited on convex bars further downstream where the current is slower. An investigation of local silting and maintenance dredging operations should be done before design depth is selected.

2.2.4 Geological Factors

2.2.4.1 Basin Excavation. Where berthing basins require excavation, obtain characteristics of the subsurface below mudline (submarine soil types, their degree of consolidation or firmness, and the depth of bedrock) to determine the best method of their removal.

2.2.4.2 Foundations and Material Sources. Obtain geotechnical data and information on suitable borrow pits for fill and construction materials, nearby aggregate and quarry stone locations for jetties, breakwaters, and revetments, and where channel or basin dredging is required, the adequacy of dredged fines and sands for site fill requirements.

2.2.4.3 Seismic Activity. For earthquake-prone harbor sites, determine the seismic-risk zone designated for the site. Use seismic-design criteria applicable to that zone for design of berthing facilities and all structural components. (Refer to MIL-HDBK-1025/l, Piers and Wharves.)

2.2.5 Impact on Environment. Consider the following environmental issues and concerns:

a) Disposal of dredge material.

b) Water quality.

c) Preservation of the ecology.

d) Esthetics.

2.3 Design Criteria for the Berthing System

2.3.1 Slip and Berth Clearances

2.3.1.1 Berth Clearance. Boats of 40 ft (12.2 m) or less for center-to-center spacing of finger piers.

a) In the case of single berths, use the maximum boat width plus 1 l/2 ft (.46 m) on each side plus the width of finger piers.

b) In the case of double berths, use twice the average boat width plus one foot at each finger plus 3 ft (.91 m) between boats plus the width of finger piers.

2.3.1.2 Finger Piers

a) Fingers may be built inclined or perpendicular to headers. The latter orientation is preferred because of the simplicity of construction and greater strength of junctions between fingers and headers.

b) Inclined fingers are generally used only where space restrictions limit the turning area opposite the slips or for alignment in the direction of prevailing winds or water flow.

2.3.1.3 Fairway Widths. Provide the following fairway widths between finger ends:

a) For power craft, minimum 2 times the length of the longest craft served.

b) For sailboats, minimum 2 l/2 times the slip length.

c) For 45 degree berthing, minimum 1 l/2 times the length of the longest boat served.

2.3.1.4 Mooring Layouts.

a) See Figure 3 and refer to DM-26.1 for mooring and berthing layouts and the type of mooring used in each case.

b) Layout A is not convenient for embarking alongside piers. Layout B is not suitable where a large tidal range prevails. Layout D requires wider spacing between finger piers than Layout C. Layout E provides

flexibility in accommodating boats of different lengths. Layout F economizes space and piers. Layout G permits no dry access to land and poses difficulty in leaving mooring if outer boats are not manned.

c) Layouts G and H are not recommended unless special situations and basin conditions warrant.

d) Access to a star-shaped-cluster moorage is either by shore-boat or by a star-to-shore extension of one of the fingers.

2.3.1.5 Slip and Berthing Arrangements. Features include the following:

a) In a boat slip, the craft may be tied away from the dock structure, usually with fore-and-aft ties on both ends. In a single-boat slip, the craft shall be flanked on each side by a finger pier. In a double-boat slip, a tie pile centered between the finger ends, three-point ties, steel whips or any cooperative switch-tie system is expedient.

b) Small boats in relatively quiet waters shall be berthed to a dock with stern hooks or bow clamps.

c) The most common slip arrangement comprises a series of piers or head walks extending perpendicular to the bulkhead to a pierhead line, with finger piers extending at right angles from the head walk on either side.

d) The average head walk width is about 8 ft (2.4 m) with a range of about 5 to 16 ft (1.5 - 4.9 m). For wider head walks, provide some width for bearing-pile risers, locker boxes, firefighting equipment, and utility lines. For narrower head walks, it is preferable to locate all obstructions to knees at the junctions of finger piers. Extra wide head walks shall generally be used in fixed-pier installations.

e) Boarding fingers for single-boat slips shall be about 3 ft (.91 m) wide. Floating fingers longer than 35 ft (10.7 m) are usually 4 ft (1.2 m) wide. In double-boat slip construction, use a finger width of 4 ft for all slip lengths.

2.3.1.6 Dimensional Criteria and Typical Details

a) See Figure 4 for a typical double berthing arrangement that has been used successfully.

b) Figure 5 illustrates single- and double-boat slips, angular moorage, applicable fairway widths, and the use of stern hooks and bow clamps.

c) Figure 6 is a graphical representation of average beam width and maximum depth of keels for various craft lengths, and suggested widths for right-angle slips where the actual dimensions of berthing craft are not known.

d) For typical details, refer to MIL-HDBK-1025/l.

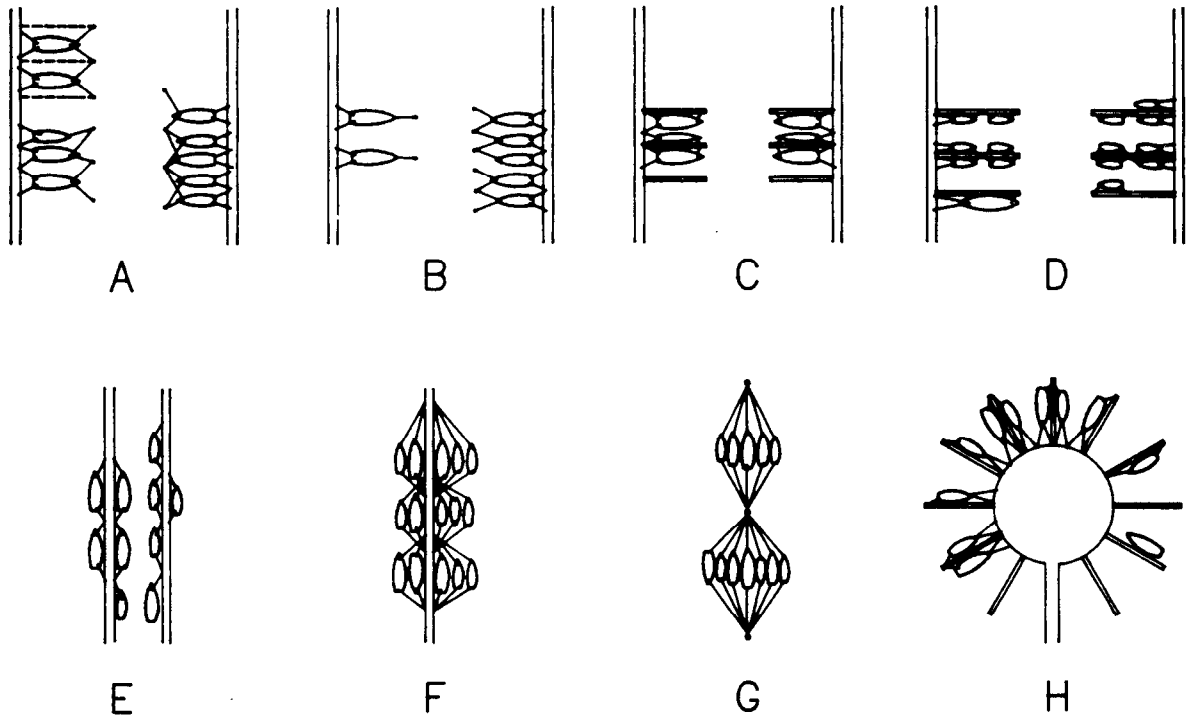

Type of mooring

A Stern to quay, jetty or pontoon, to piles

B Ditto but bows moored to anchors or buoys

C Alongside finger piers or catwalks one yacht on each side of each finger

D Ditto but more than one yacht on each side of each finger

E Alongside quays jetties or pontoons single banked

F Alongside quays jetties or pontoons up to 3 or 4 abreast

G Between piles

H Star finger berths

Figure 3
Typical Small Craft Mooring Layouts

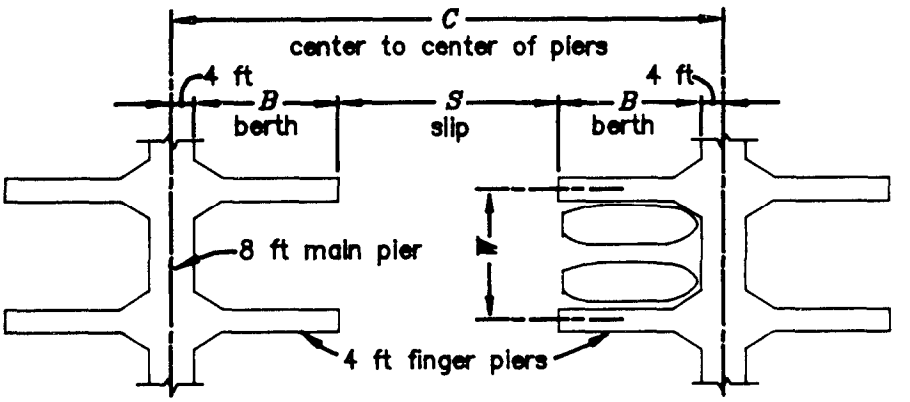

No scale used

Length of berth, B, (feet)	Width, W (feet)	Slip, S, (feet)	Center to center of piers, (feet)
20	20	35	83
30	28	52–56	121
40	32	70	158
50	36	100	208
60	42	120	248
70	48	140	288
80	56	160	328

Figure 4
Typical Berthing Arrangement

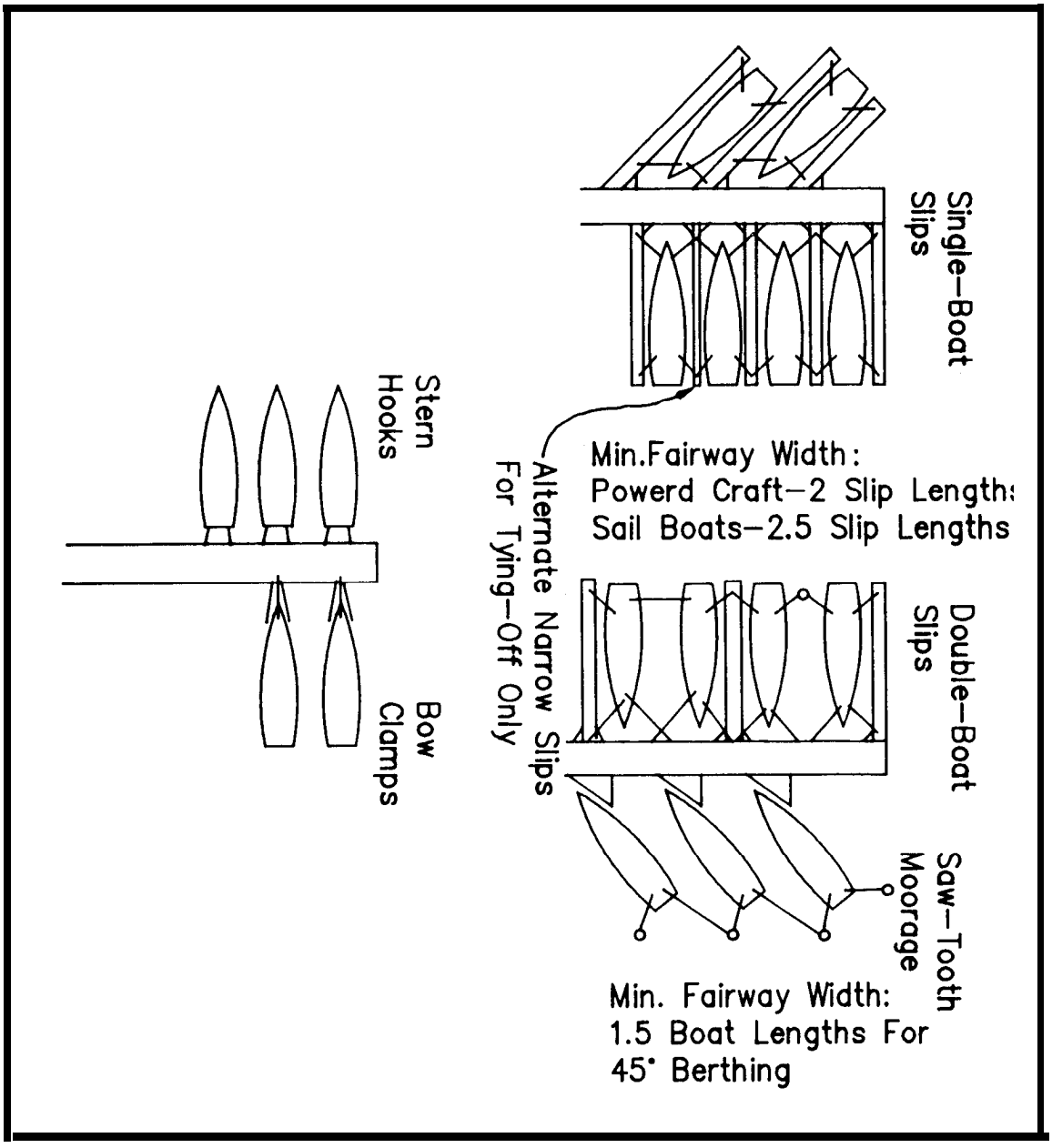

Figure 5
Small Craft Berthing Systems

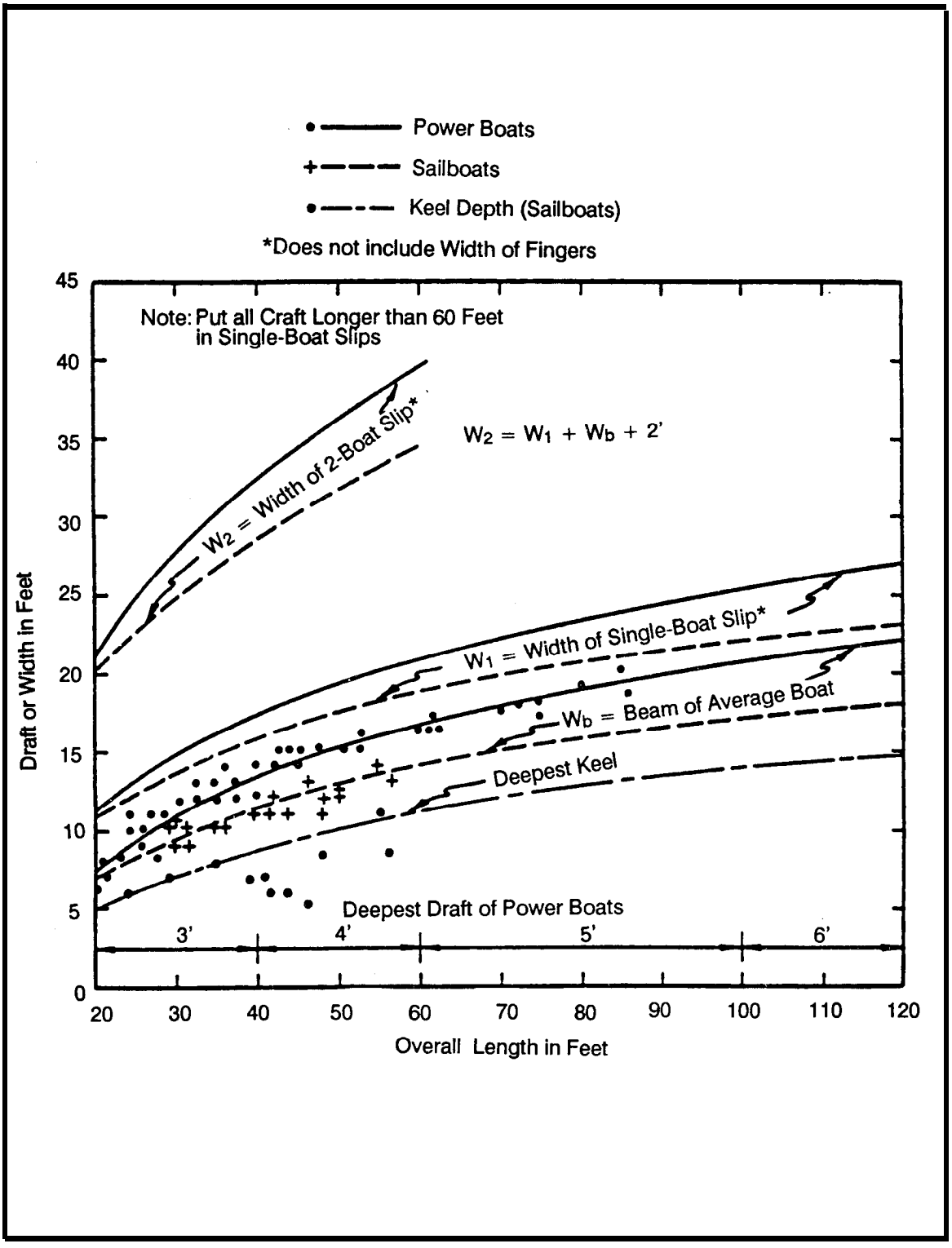

Figure 6
Dimensional Criteria for Berthed Craft

2.3.2 Fixed Versus Floating Pier System

2.3.2.1 System Selection

a) The decision to select fixed or floating piers for any small craft harbor basin shall be based on economy, tidal range, safety and convenience.

b) A combination of fixed and floating piers shall generally be considered satisfactory for some sites.

c) Advantages of a fixed-pier system are:

1) Usually less expensive to construct.

2) Less expensive to maintain.

3) Stronger, more durable and stable.

4) Will bear heavier loadings.

5) Withstand impact more readily than floating-pier system.

d) Advantages of a floating-pier system are:

1) Constancy of level between pier and water

2) Rearrangement of layout is possible.

3) Adjustment of mooring lines is unnecessary

4) Less likelihood of damage to boats under tidal conditions.

2.3.2.2 Selection Criteria. These include the following:

a) In harbor basins, where water surface levels do not fluctuate more than 2 ft (.61 m) and the water depth is about 20 ft (6.1 m) or less, the berthing docks and slips should usually be of fixed construction.

b) Fixed berths should be considered for tidal ranges of up to 5 ft (1.5 m).

c) Where water surface levels fluctuate more than 5 ft, a floating-pier system is mandatory.

2.3.3 Fixed-Pier Berthing Systems

2.3.3.1 General Features. These include the following:

a) Piers shall be no wider than safe pedestrian and handcart traffic requires.

b) Fingers shall be no wider than 3 ft (.91 m).

c) Main walkways shall be 4 to 8 ft (1.2 - 2.4 m) wide.

d) Pile trestles are generally used to support stringers and decking with cross and sway bracing installed.

e) Deck elevations shall be approximately 1 ft (.30 m) above extremely high water.

f) Construction of fixed-level berthing systems may be either timber, reinforced concrete, steel or aluminum. A timber superstructure is preferred because of the ease with which attachments may be made after final construction.

g) Berthing structures and components using factory-built units for easy field installation are mostly of tubular and pressed-steel construction with either stamped metal or timber plank decks.

h) Covered berthing is especially adaptable to a fixed-pier system.

i) Utility lines shall be carried under the deck or along the stringers for supporting the roof.

j) See para. 2.3.4. for deck materials and surface.

2.3.3.2 Vertical Loading. Design fixed structures for deck live loading of not less than 50 pounds per square foot (psf) for fingers and 100 psf for main walks and building floors. When vehicles are to be allowed on main walks, the design loading shall be increased accordingly (refer to MIL-HDBK-1025/l).

2.3.3.3 Other Design Criteria. Other design criteria shall be as provided in MIL-HDBK-1025/l.

2.3.3.4 Typical Construction. Figure 7 represents a typical fixed-pier system.

2.3.4 Floating-Pier Berthing Systems

2.3.4.1 General Considerations. General considerations include:

a) Many floating-pier systems are commercially available. Consider an appropriate and commonly used and tested system to suit specific basin peculiarities.

b) In a floating-pier system, the basic framework that transmits unequal stresses imposed by current, wave action, and wind from one float to another throughout the system is generally constructed of timber. Most other materials cannot take the almost constant flexure to which the framing is subject over prolonged periods without fatigue failure. Some metal stringer systems have been designed with flexible connections which keep flexure below the fatigue failure limit.

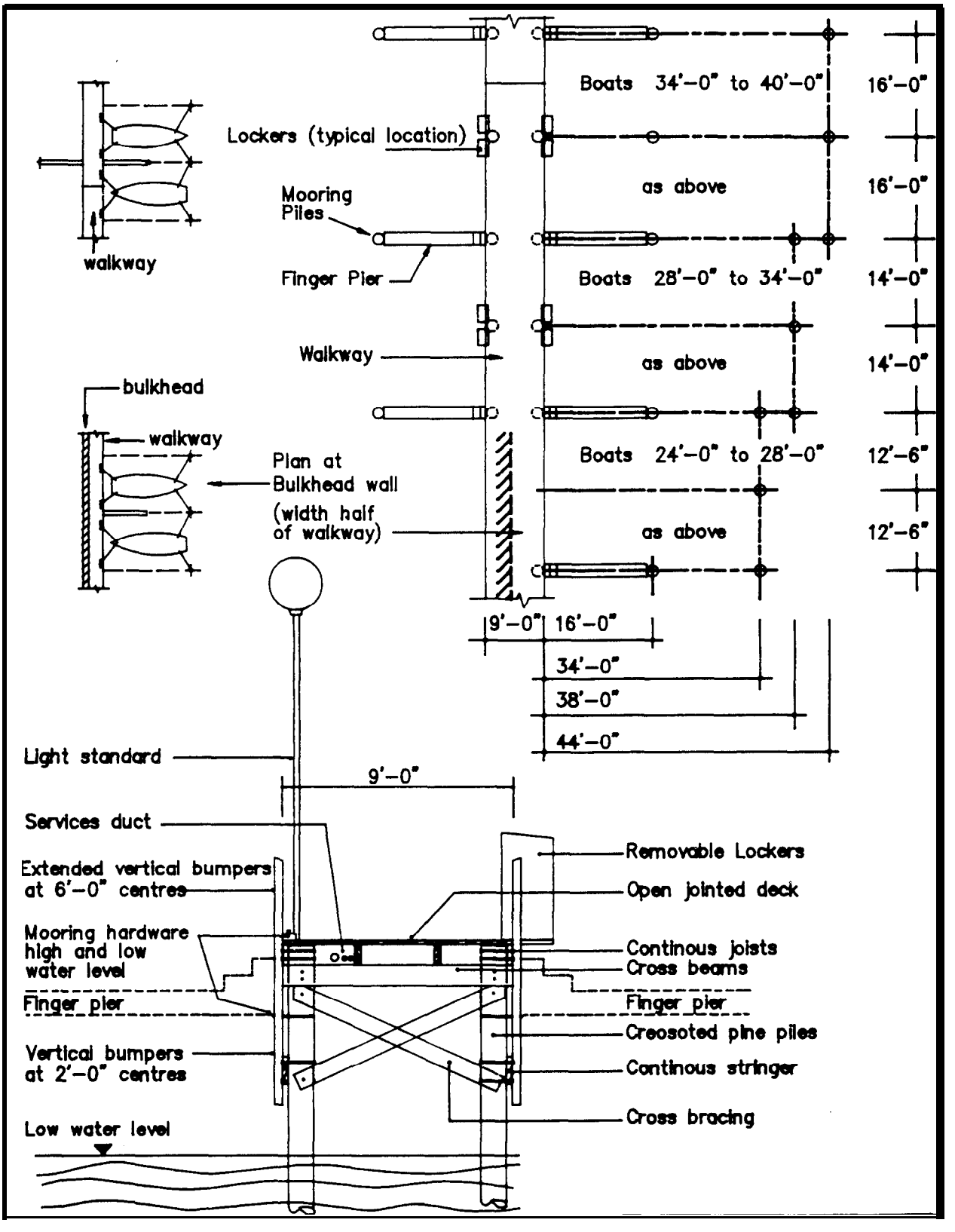

Figure 7
Typical Fixed Finger Pier System

2.3.4.2 Flotation Materials

a) Timber Log. Although least expensive in some areas, it has a tendency to become waterlogged and sink in a few years. Use is generally not recommended.

b) Extruded Polystyrene (Styrofoam). Available in several sizes of precast or premolded forms, mounted under a timber frame with timber deck.

c) Expanded-Pellet Polystyrene. Material shall be firm in composition and essentially unicellular. Polystyrene planks should conform to the following requirements:

1) Be hydrocarbon resistant, and evidence no apparent softening or swelling when tested by the immersion method stipulated in Military Specification MIL-P-40619, Plastic Material, Cellular, Polystyrene (For Buoyancy Applications).

2) Minimum Properties. Density = l-1/2 pounds/cu. ft. Compressive strength = 20 pounds/cu. in. at 5 percent deflection. Shear strength - 25 pounds psi and 40 psi tensile strength.

3) Have maximum water absorption of 0.12 psf of skinless or rindless surface, when tested by the immersion method stipulated in Military Specification MIL-P-40619.

d) Polyurethane Foam. This is more expensive than pellet polystyrene; however, it is sometimes preferred because of its hydrocarbon resistance. Polyurethane foam requires a covering with an oxidation-resistant material; the nonabsorbent, noncellular variety should be specified.

e) Waterproof Shells. Shell-type floats can be ballasted with water or sand to allow corrective leveling of the deck after installation. However, they are susceptible to leakage and loss of buoyancy if the shell becomes permeable for any reason. Some of the shell-type floats in use are:

1) Fiberglass of plastic-coated shell with a molded foam core over which a reinforced concrete deck is poured. The edge beam, cross beam, and the tie-rod system in this construction make the units exceptionally tough and strong. Synthetic shell floats are not affected by hydrocarbons, brackish water, or any other common contaminant likely to be found in a small craft harbor.

2) Prefabricated metal floats of steel and aluminum. The shells are folded and welded into rectangular units comprising thin-gauge sheets with stiffening baffles for greater strengths. Preservative coatings are applied to both sides of all corrodible metals. Their use in freshwater harbor basins is feasible, but in saltwater environment the use of metal floats still remains questionable.

3) Jettisoned fuel tanks from military aircraft. This type is expedient when sufficient surplus can be procured at low cost.

4) Pipes. Tubular steel floats with attached clip angles at each end bolted to a steel deck framework are used. Coating the entire framework, including the tubes, with coal-tar epoxy provides protection against corrosion.

5) Steel drums. They are expedient and inexpensive in short life of substandard construction. Maintenance costs in seawater would be prohibitive.

f) Concrete Floats. These provide maintenance-free permanence to concrete construction and added stability to the floating pier. Lightweight aggregates to keep the dead load to a minimum, prevention of shrinkage cracks, honeycombing and segregation, and precise mix control are essential. Concrete floats can be made with or without reinforcement. When concrete floats are reinforced, a galvanized wire mesh shall normally be used. The float should be designed so that at no point will the allowable tensile strength of the concrete be exceeded.

g) Wooden Floats.

1) Pressure-treated wood is in use for floating dock modules. All wood shall be treated in accordance with AWPB Standard MPL for Softwood Lumber, Timber and Plywood Pressure Treated for Marine (Saltwater) Exposure, as recommended for a specific site.

2) Flotation units shall include a polyethylene pan, polystyrene foam block, and polyethylene cap sheet.

h) Figures 8, 9, and 10 show various types of floats commonly used.

2.3.4.3 Deck Materials and Surface

a) Wood Plank Deck. It is used without a coating and also with a coating to minimize splintering. Roughened surface texture of coatings imparts nonskid quality. Planks should not exceed 10 in. (254 mm) in width and shall be spaced l/4 in. (6.35 m) apart. Diagonal planking is sometimes used for floating docks to provide cross-bracing strength. For appearance and wearing quality, the planking should be given two priming coats.

b) Plywood Decking. Commercial grades of exterior plywood are made with waterproof glues of excellent quality and may be safely used for exposed decking. Plywood of 3/4 in. (19.05 mm) thickness is more expensive than 2 in. (50.8 mm) wood planking, but provides greater structural strength in cross bracing. Plywood decking should be crowned slightly to avoid ponding in wet weather. It should be painted as described for wood planks. A synthetic surfacing may be pressure bonded to plywood deck panels under heat to provide nonskid and long-wearing quality.

c) Laminated Plank Deck. Laminated plank deck uses nominal 2 by 3 in. or 2 by 4 in. cedar pieces glued together side by side for use in continuous decking in large, thick planks of any length or width, and it provides high stiffness. Laminated decks may be used without any additional framing.

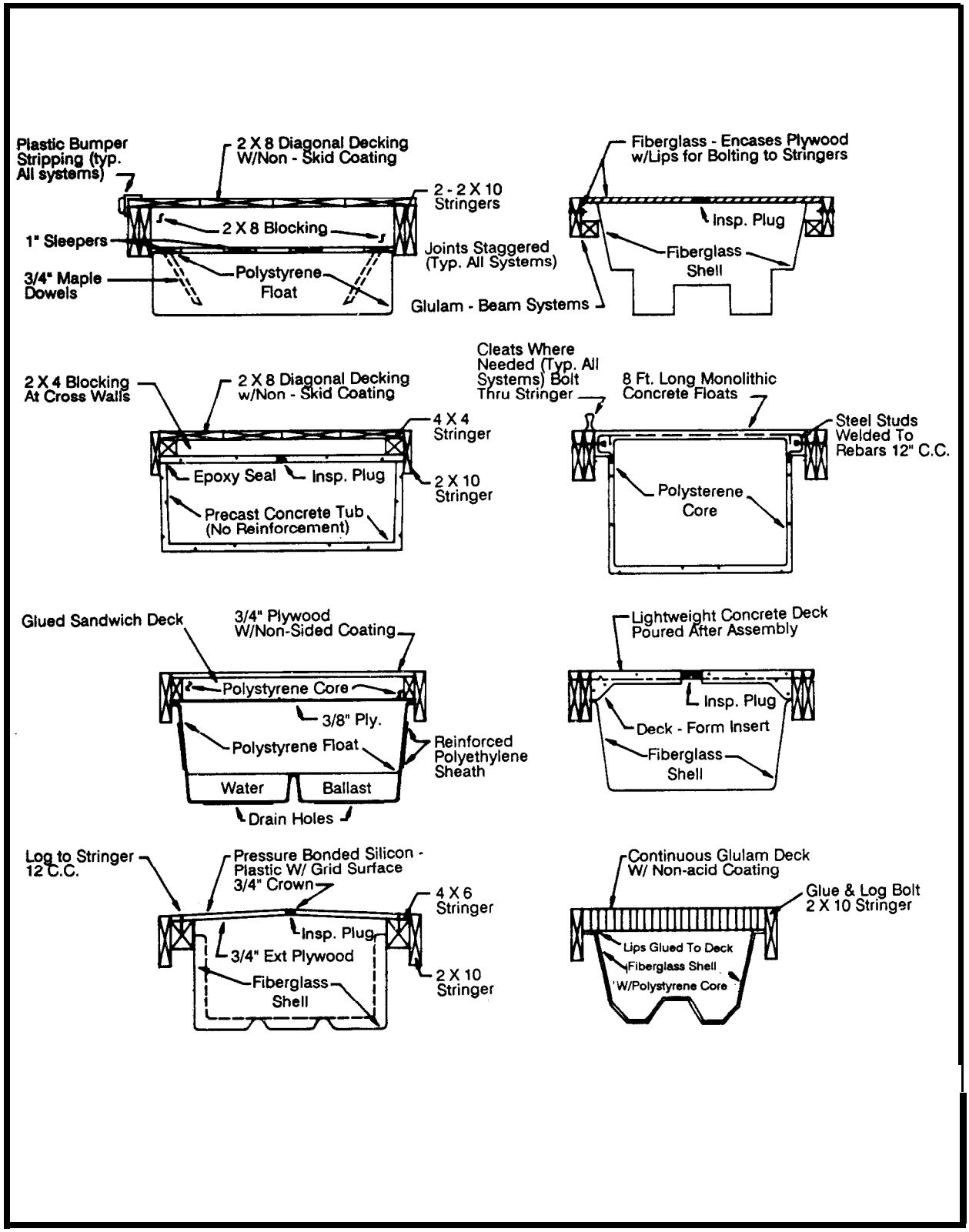

Figure 8
Various Types of Floats

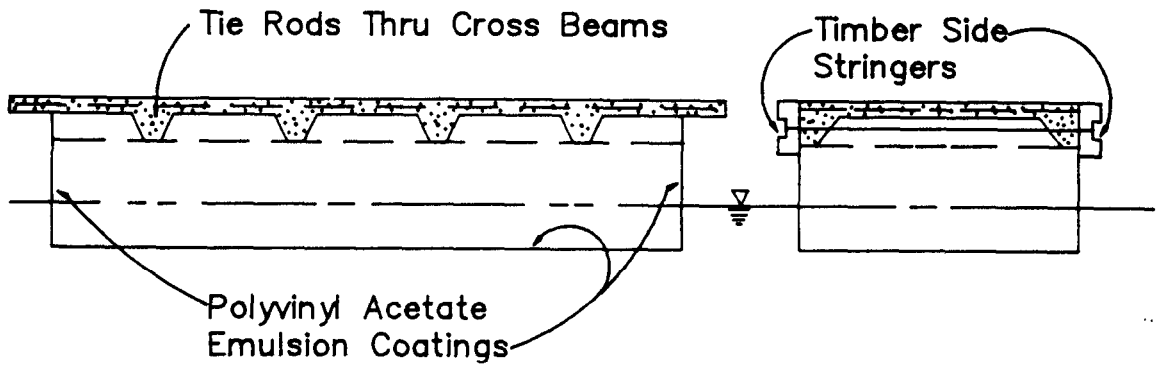

LONGITUDINAL SECTION TRANSVERSE SECTION

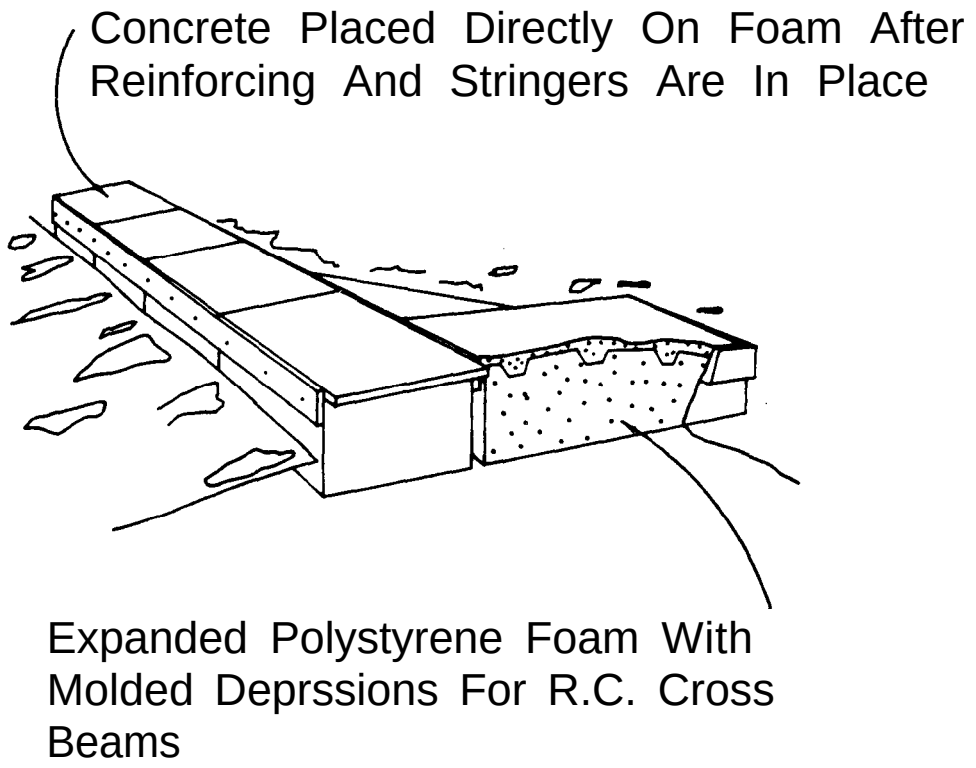

Figure 9
Typical Foam Float With Concrete Deck

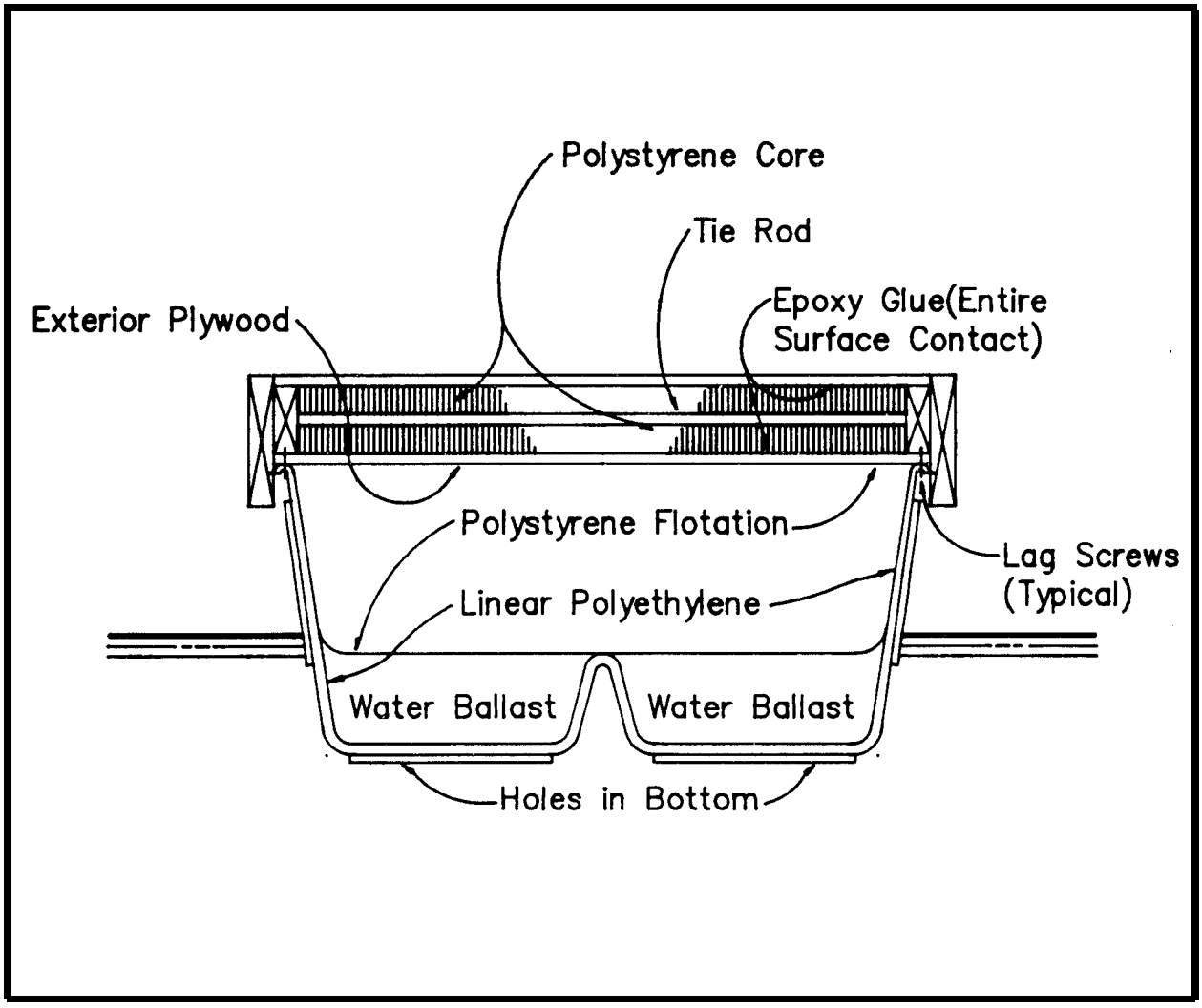

Figure 10
Typical Water-Ballasted Floating Dock

d) Sandwich Deck. It has a polystyrene core glued to a plywood top and bottom faces and edged with 2-in. (50.8 mm) lumber. It also has high stiffness and is lightweight. Cost of the sandwich deck compares favorably with the laminated plank deck.

e) Concrete Slab Deck. Separate reinforced concrete deck slabs are sealed to the lips of open-top unreinforced floats with epoxy cement. Another type of concrete deck is a monolithic part of a float. Concrete decks provide a durable, high-stiffness, nonskid, maintenance-free deck surface. The cost is high in comparison to timber decking and repairs may be difficult.

f) Metal Deck. Sheet metal modular units, with surface anodizing or baked enamel coatings are used in freshwater environment. Repairs are difficult if bent or pulled apart at their connections.

g) Fiberglass and Synthetic Deck. Panels of fiberglass and other synthetics are used with floating-pier systems. They have little resistance against torsional bending, and must rely on the framework for stiffness and prevention of damage by racking action in rough waters. Some types of panels have excellent wearing qualities, but tend to be rather brittle.

h) Wearing Surface:

1) The top surface of decking should withstand prolonged exposure to sunlight, frequent wetting and drying, severe abrasion by scuffing and dropped objects, and a certain amount of flexure.

2) It should not crack or peel off.

3) It should be nonskid, not prone to staining, and easily cleaned of oil, paint spills and dirt.

2.3.4.4 Deck Framing and Float Connections

a) Vertical Stresses Induced by Wave Action. Depending on the weight of the floating system as a whole, and assuming a design wave of approximately 2 ft (.61 m) high, the section modulus about a horizontal axis for timber framing: (based on empirical data) should range from a nominal 20 in.^{3} to 30 in.^{3} per foot of finger deck-width. Thus an adequate stringer system for a 4 ft (1.2 m) wide finger floating on foam or lightweight shells would be a 2 in. by 6 in. (50.8 mm - 152.4 mm) plank inside and a 2 in. by 10 in. plank outside on each side of the finger. However, since all bolt heads, nuts, and ends of tie rods must be recessed sufficiently into the outer stringer to avoid damage to boat hulls, a 3 in. or 4 in. (76.2 - 101.6 mm) nominal thickness is recommended for all outside stringers. The stringers should be in 16 ft to 20 ft (4.9 - 6.1 m) lengths with butt joint swell offset and with adequate bolting to develop bending strength. For concrete floats, the same deck would require stronger framing. In a lightweight system, a torsion bar of 3 in. or 3-1/2 in. (76.2 mm - 88.9 mm) galvanized pipe with welded-on end plates, centered under the deck of each finger is recommended. A glulam beam has been developed which strengthens the side stringer system. A glulam deck 3-1/4 in. (82.5 mm) thick provides excellent torsional resistance.

b) Horizontal Stresses. For a design wind load of 15 psf (see para. 2.3.5), stringers based on the foregoing vertical-stress criteria will normally be adequate for horizontal stresses in 3 ft (.91 m) wide fingers up to 30 ft (9.1 m) long and 4-ft wide fingers up to 40 ft (12.2 m) long cantilevered from the rigid main walk or header, provided that generous knees are installed and attachments to the walk or header are adequate to resist the design moment. For fingers longer than approximately 40 feet, adequate cantilever strength is difficult to develop, and end guide piles may be required. The fingers should be designed for the same wind loading criteria, considering the end to be pinned and the header connection to be rigid at the outer end of the knee. Cross bracing shall be provided. The bracing can be in the form of diagonal or knee bracing, in some or all of a finger below a plank deck, or it can be solid deck plates of plywood, concrete, or glulam decking.

c) Securing Flotation Elements. Some float and deck sections are built as integral units. When the floats are separate, they shall be attached or cradled under the deck frame. Connections used are as follows:

1) Foam logs or planks are dowelled, bolted, or strapped to the framing. Water-resistant epoxy glues are being developed that give promise of producing a strong reliable bond to the deck frame.

2) Large independent pontoons of concrete, fiberglass shells, or composite construction normally need only to be cradled; i.e., prevented from sliding laterally by outer stringers and cross struts. This facilitates their removal for replacement or maintenance when required. However, in areas exposed to larger waves, they shall be strapped to their saddles.

3) Strapping. If metal straps are used they should be stainless steel. Nylon straps are suitable, but must be adequately tightened initially.

4) Bolting. Bolts shall be of corrosion-resistant material.

5) Strength of Foam. Bearing boards should have sufficient bearing surface to prevent crushing of the foam. The foam has a safe compressive strength (with negligible deflection) of approximately 5 psi. Being weak in bending, bearing contact areas shall be spaced not more than 2 ft (6.1 m) apart along the deck and shall be continuous along each edge.

d) Figure 11 represents typical deck framing and float connections in use.

2.3.4.5 Vertical Loading and Deck Levels

a) Floating piers and docks for small craft should normally ride with the deck uniformly at 15 to 20 in. (381 - 508 mm) above the water surface under dead loading to provide ease of boarding and to assure that the side stringers are below the gunwales of the smaller craft and below the spray rails of larger craft. The lower limit is necessary to prevent wave overtopping of the deck at full design live loading.

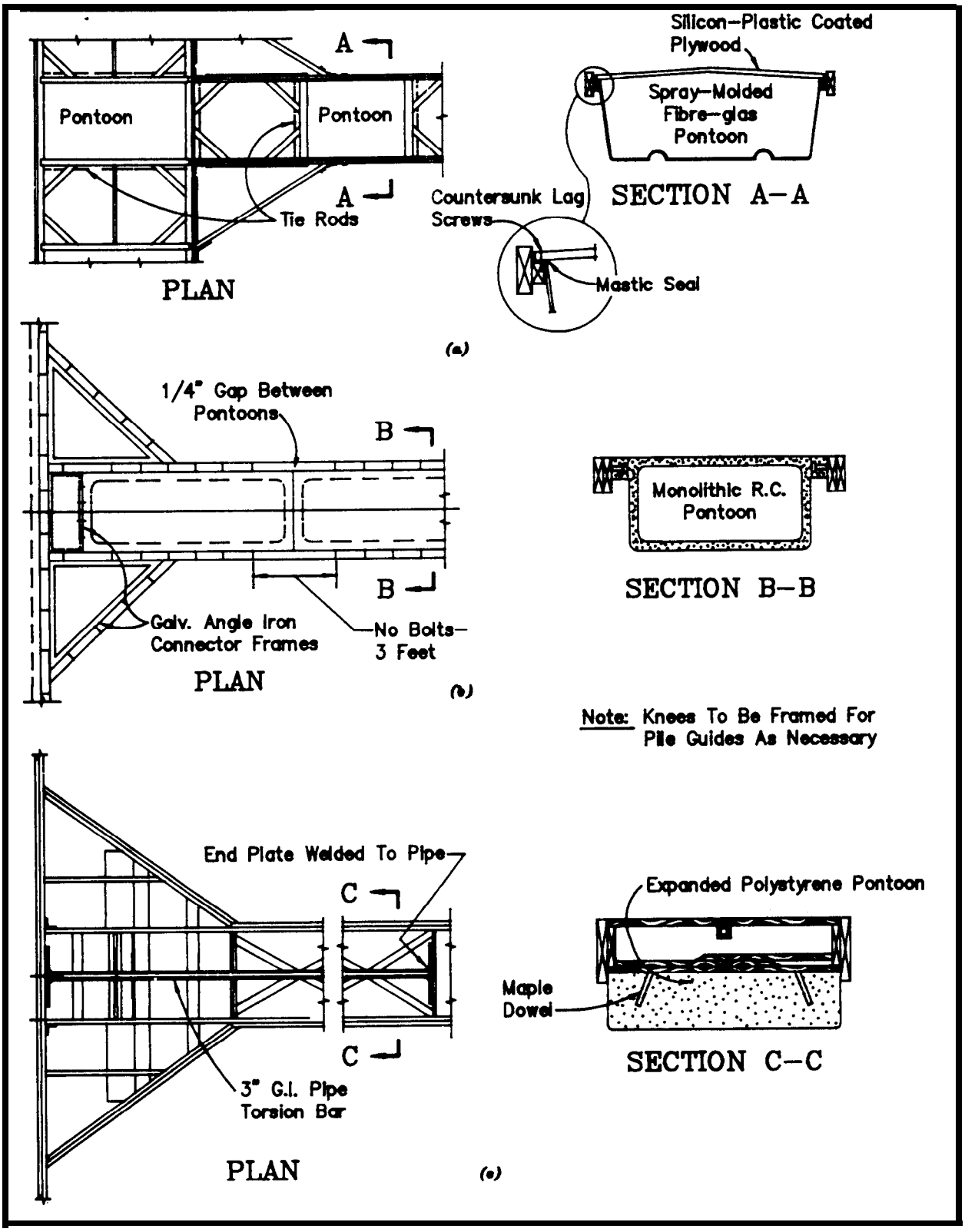

Figure 11
Typical Deck Framing Systems and Float Connections

b) Design live loading shall be 25 psf. However, on fuel docks or loading docks, a higher live loading, depending on the anticipated usage, is required. Under full live load plus dead load, the flotation elements should not be submerged more than 75 percent of their volume.

c) When concentrated live loads on headers exceed the design live load, design shall be such as to distribute such loads over a number of nearby, attached fingers and a considerable length of the header itself.

d) The deck system and all interfloat stringers shall be designed for 50 psf.

e) Deck loading shall be such that a concentrated load of 500 pounds can be placed anywhere on the deck surface without overstressing the framing members and without tilting the deck more than six degrees from the horizontal.

f) For boats with a low rub strake, the stringer shall be wide enough to extend down to within 8 in. (244 mm) of the water surface under dead load only.

g) For boats with high gunwales, provide low level floating fingers with vertical fender posts that extend upward from each side a few feet above deck level at intervals of about 8 ft (2.4 m).

2.3.4.6 Typical Construction. Figure 12 represents a typical floating-pier system.

2.3.5 Lateral Loading

2.3.5.1 Loading. Maximum lateral loading of a fixed- or floating-pier system is usually produced by strong winds blowing against the structure and berthed craft. Such loading usually exceeds normal docking impact loads or current drag. The design lateral load is based on a given wind velocity acting on the above water profile of the system and craft. This loading (velocity pressure in pounds per square foot) for wind velocities up to 104 knots is shown in Figure 13. The wind velocities are for steady-state conditions, neglecting gusts. For wind velocities at various geographical locations, see NAVFAC DM-26.6, Mooring Design Physical and Empirical Data.

2.3.5.2 Analysis

a) Check both parallel and perpendicular directions to the main walk.

b) Determine average profile height for berthing craft. (See Figure 14.) It is often taken as 15 percent of the slip length in open berths.

c) In computing the parallel windload on a line of boats, assume that all shielded craft experience only 20 percent of the windloading that is applied to the first (unshielded) boat.

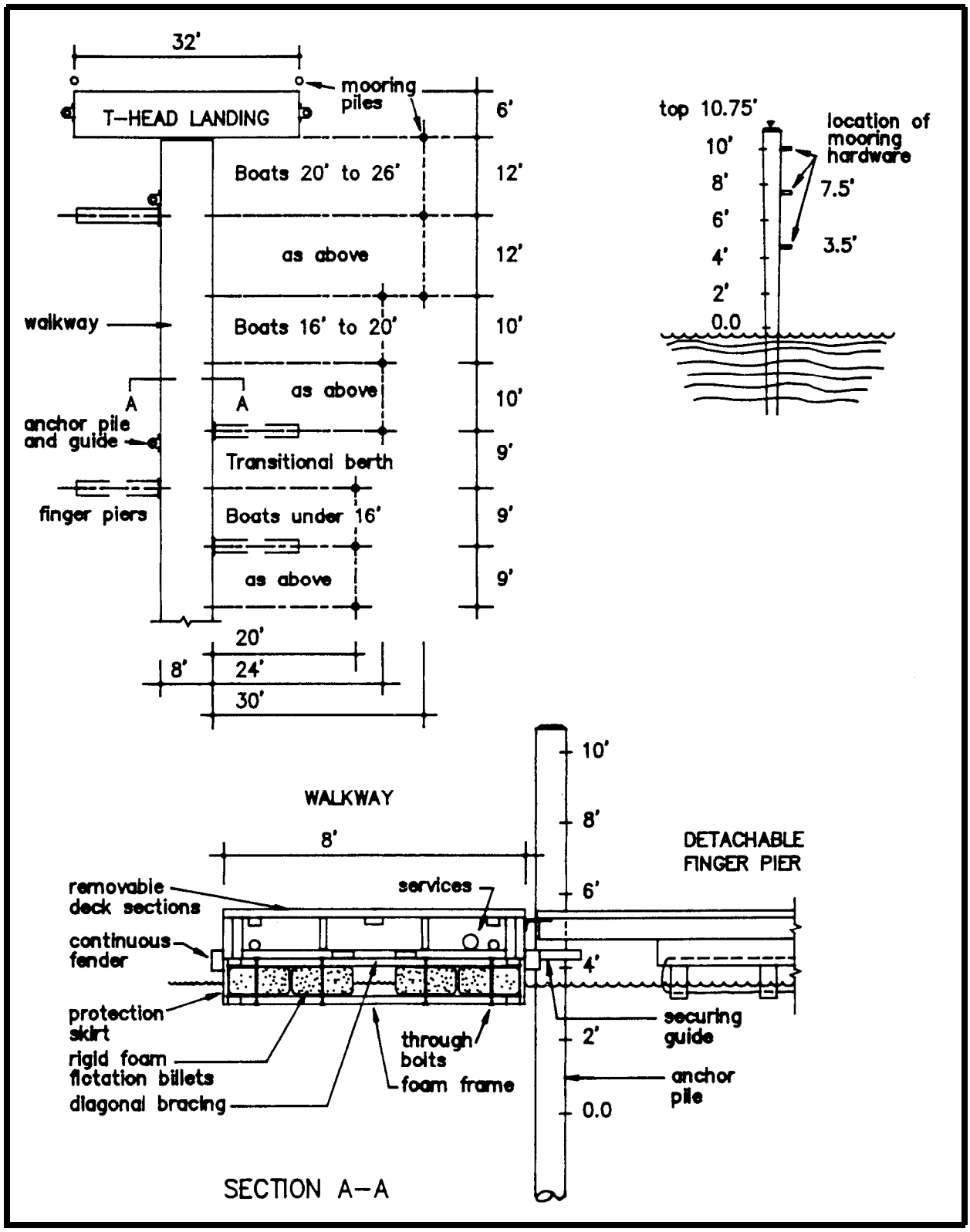

Figure 12
Typical Floating Pier System

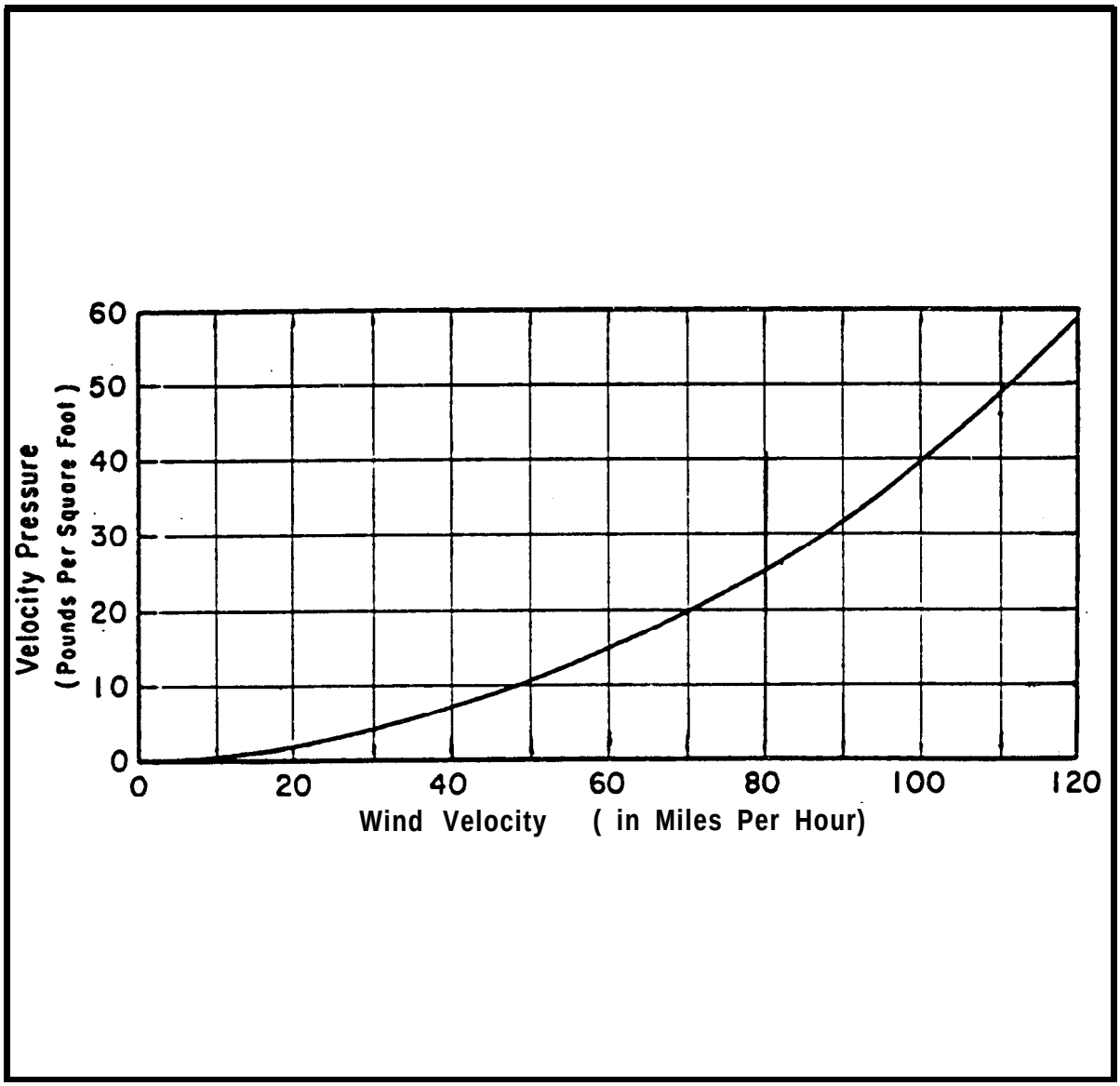

Figure 13
Windloading on Small Craft Berthing System

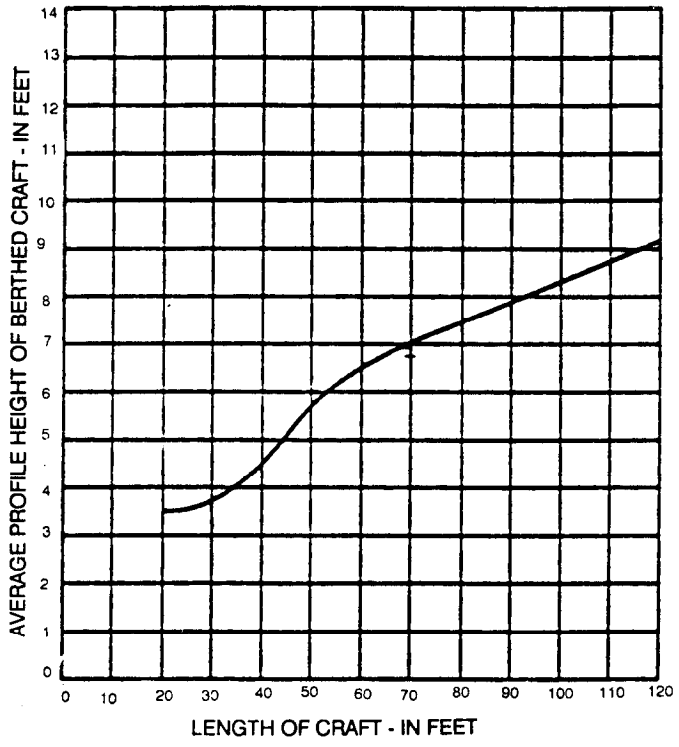

Figure 14
Variation of Average Profile Height of
Berthed Craft with Craft Length

d) In computing the perpendicular windloading on a system, obtain the total area on which the wind acts by multiplying the average craft profile height by the slip width and that product by the total number of slips, then adding to the result the above water areas of the finger pier ends exposed to the wind.

e) Where slips are provided on both sides of the main walk, the area calculation shall include the side that berths the set of boats with the largest average profile height.

f) Multiply the area by 115 percent to account for the wind force on the sheltered or leeward boat row.

g) Figure 15 represents a sample computation for lateral loading on a typical open-pier system.

2.3.6 Anchorage Systems

2.3.6.1 Selection Criteria. Floating piers and docks should be anchored against lateral movement likely to be caused by wind, water currents, and vessel, ice or floating-debris impact. For selection of an anchorage system, consider depth of water in the small craft basin, extent of water-level fluctuations, the prevailing current, and the submarine bed material.

2.3.6.2 Systems

a) Anchor Piles. These are simple and are the most commonly used. They require firm but penetrable subsurface strata, a bottom depth not exceeding 30 ft (9.1 m) at highest water level, and relatively moderate horizontal loading conditions. Where pile anchorage is used, guides shall be incorporated in the deck structure. Commonly used guides are metal hoops, rectangular wood collars, and rollers. In well-protected basins, use rollers only for those piles that are found to be in almost continuous contact with the guides. Use collars with hardwood blocks at other piles. Metal hoops shall not be used with bare wood piles since they tend to crush the wood fibers.

b) Anchor Lines. Where a boat basin is constructed in deep water or where large water-level fluctuations occur, floating structures are usually anchored in place with steel cables or chains. Where the entire floating system requires movement through considerable distances in and out with water-level changes, special anchor barges with hand winches are used. A line-anchorage system usually uses two outer anchor lines extending about 45 degrees from the outer corners of the floating system, and two lines tying the system back to shore.

c) River Anchorage. River currents usually stress an anchorage system more severely than still-water or tidal basins. Long, trailing finger piers can be tied to piles or to dolphins. Figure 16 represents a typical river anchorage system.

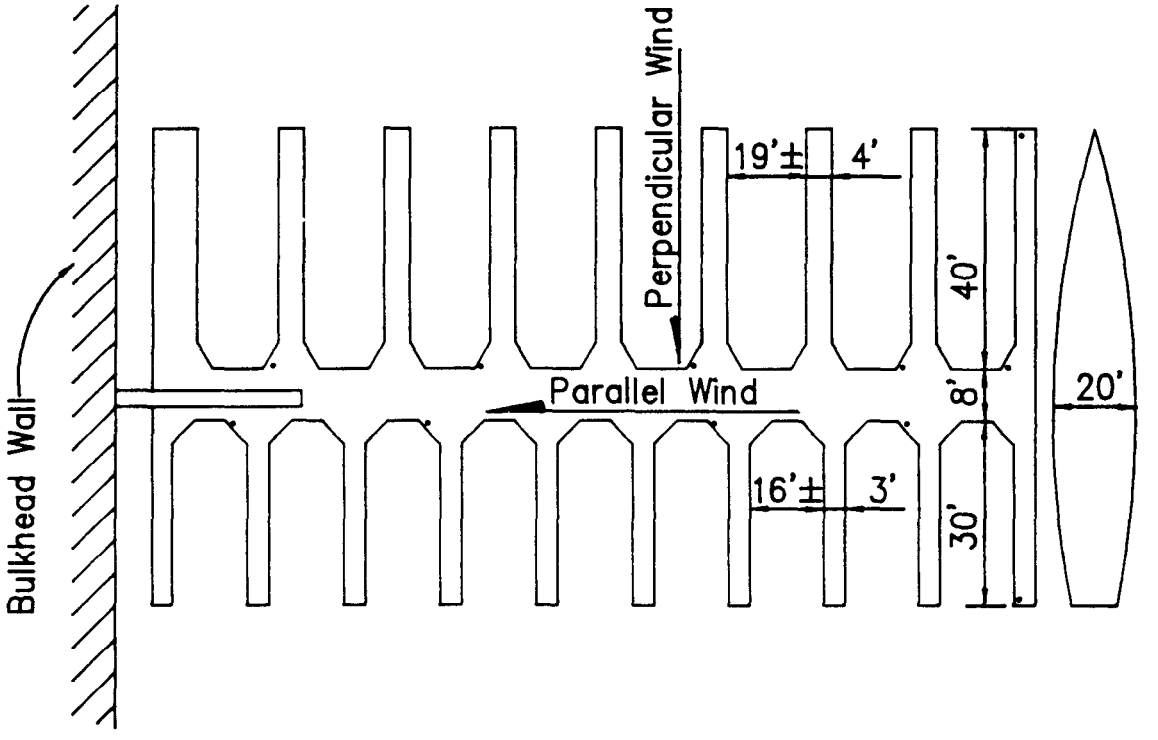

NOT TO SCALE

° Design Wind Load: 15 PSF

° Perpendicular Wind

40' Boats:	8 Each x 19' Beam x 5.5' Height x 15 PSF	=	12,540	Lbs.
Fingers:	9 Each x 4' Beam x 1.5' Height x 15 PSF	=	810	Lbs.
Multiply by 1.5 for Row of 30' Boats = 1.15 x 13,350 Lbs.		=	15,352.5	Lbs.
78' Boat:	20' Beam x 7.4' Height x 15 PSF	=	2,220.O	Lbs.
TOTAL PERPENDICULAR LOAD:		=	17,572.5	Lbs.

° Parallel Wind

78' Boats:	78' Each x 7.5' Beam x 15 PSF	=	8,658	Lbs.
40' Boats:	8 Each x 40' x 5.5' Height x 3 PSF	=	5,280	Lbs.
30' Boats:	10 Each x 30' x 4.8' Height x 3 PSF	=	4,320	Lbs.
TOTAL PARALLEL LOAD:			18,258	Lbs.

° Reckon Parallel windloading for Design

Figure 15
Sample Calculation for Windloading on a Floating Pier System

d) Anchorage of Covered Floating System.

1) Dolphins are usually used instead of anchor piles.

2) If the water depth is significant, submerged structural ties across finger ends well below the keel depth of the berthed craft are sometimes used to strengthen a covered floating system. (See Figure 17.)

2.3.7 Approach Piers and Gangways

2.3.7.1 General Criteria. These include the following:

a) Access to the berthing docks and slips from the basin shall be accomplished by a brow "fixed-pier approach" to a fixed berthing system and by a hinged gangway to a floating-pier system.

b) Fixed-pier approach is an extension of the head walk to a landing on the bulkhead wall or an abutment at the shoulder of a sloping bank. In floating systems, one end of the gangway shall be supported on floats. It should be lightweight and only long enough to result in some predetermined maximum slope (1 on 3) at extreme low water level. For slopes steeper than 1 on 3, a hinged staircase with self-leveling steps shall be provided.

c) Where the boat basin perimeter is appreciably higher than maximum high water, the brow shall be ramped down to 1 ft or 2 ft (.31 - .61 m) above the elevation at its outer end to decrease the slope of the gangway at low water.

d) The gangway may be narrower than either the approach pier (brow) or the main walk.

e) Length of gangways shall be such that the slope will not be greater than approximately 1 on 2-1/2 at maximum low water.

f) Weight of gangways shall be kept as small as possible.

g) Gangway construction may be of timber, steel, aluminum, fiberglass, or a combination of these materials. A typical gangway is a pair of steel or wood stringers with a plywood deck.

h) Gangways shall have handrails. A 3 ft (.91 m) width between handrails is the minimum, and 4 to 5 ft (1.2 - 1.5 m) is the minimum if the pier has multiple berths or if the gangway traffic is heavy. Typical construction is Warren-truss welded-pipe handrail.

i) Gangways shall be hinged at the top inside edge of a perimeter bulkhead wall. If the perimeter is a sloping bank, provide a short fixed-approach pier to reduce the length and weight of the gangway. The hinge at the upper end of the gangway shall be of rugged design.

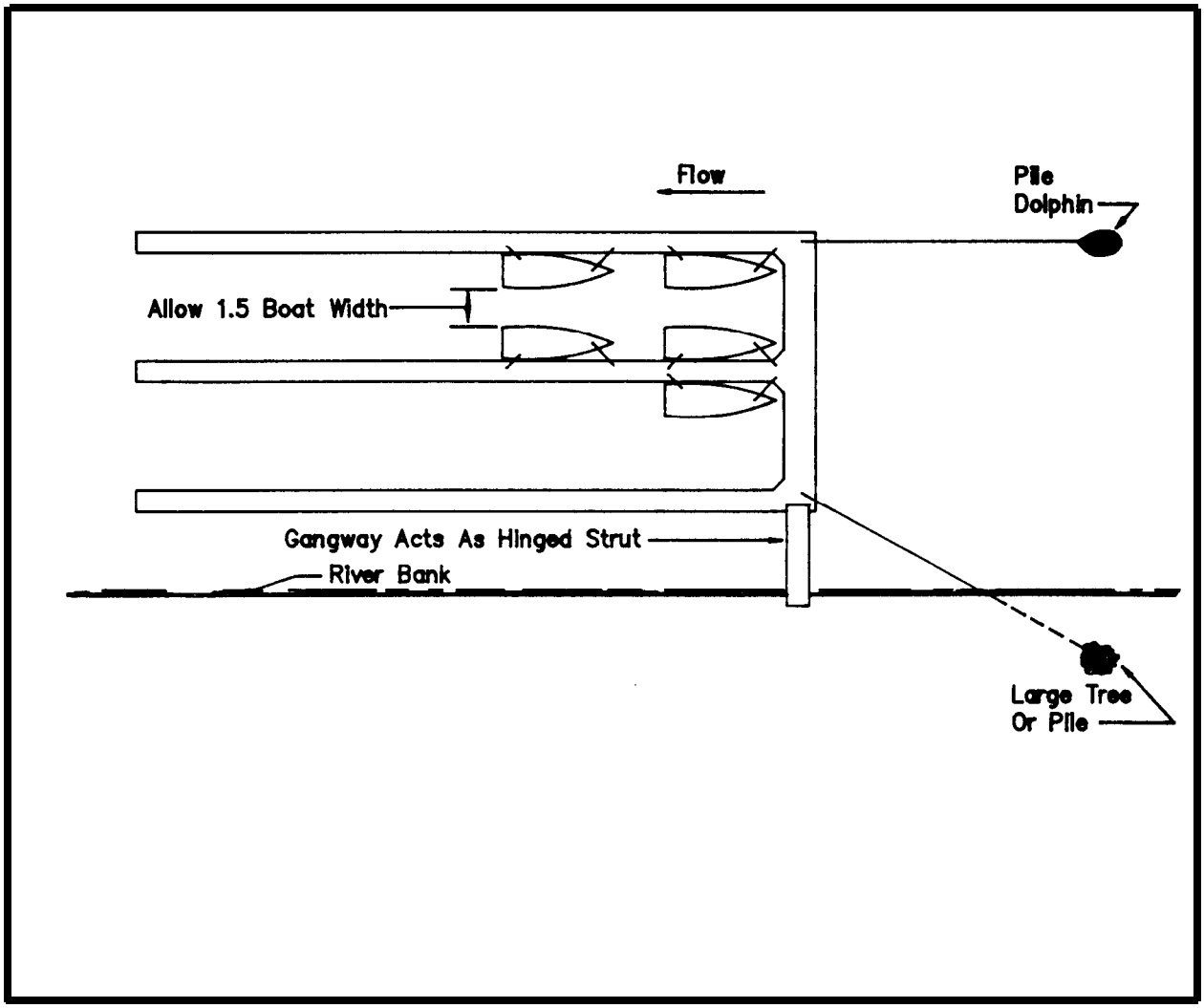

Figure 16
Typical River Anchorage System

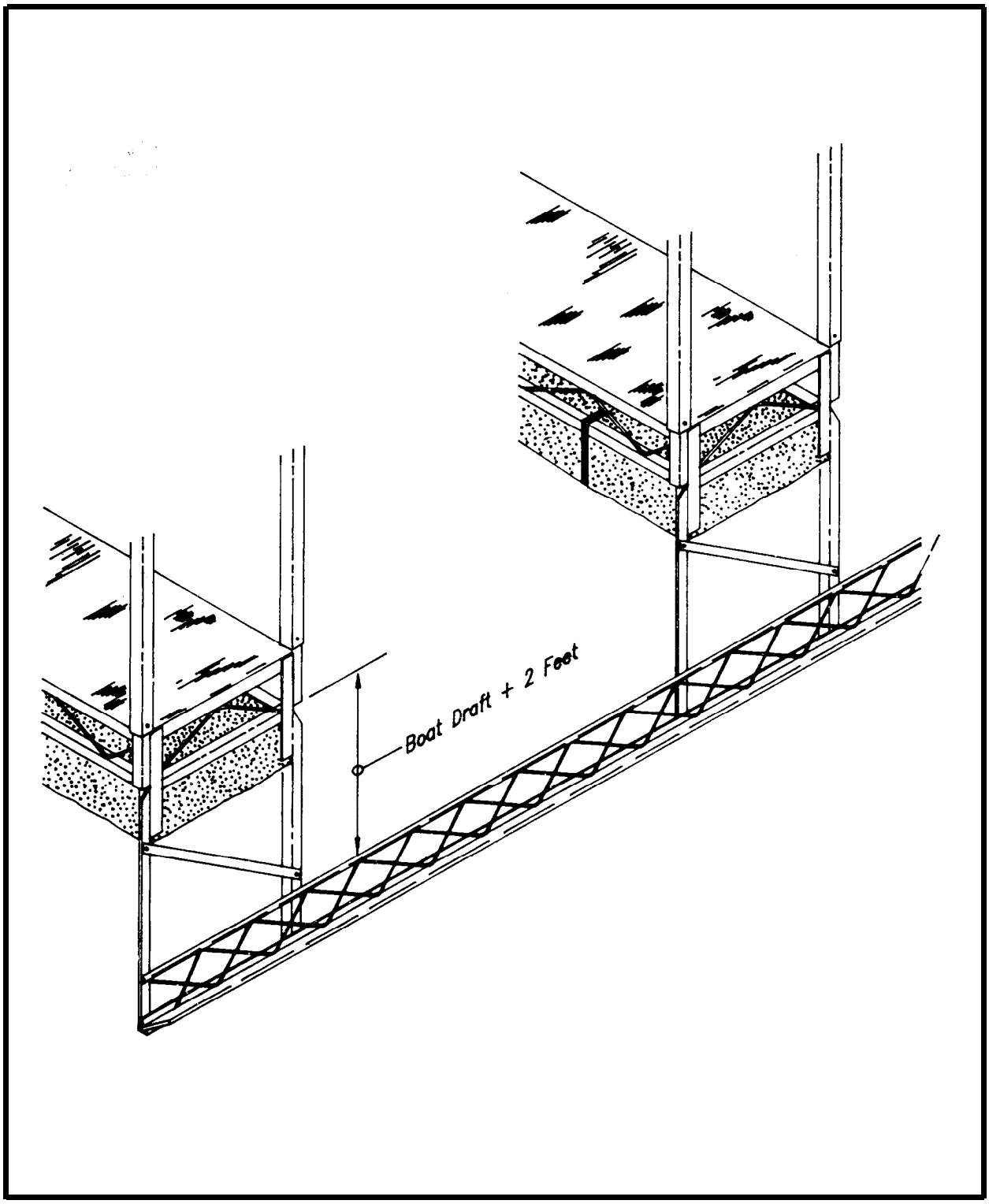

Figure 17
Typical Use of Submerged Crossties
to Strengthen Covered Floating System

j) Provide sliding ends for gangways weighing less than 500 pounds. For heavier gangways, provide rollers and aprons. The apron plates shall be long enough to clear the ends of the roller guides at low water level and attached to the bottom end of the gangway with a pipe-and-rod hinge. (See Figure 18.)

2.4 Design Criteria for Other Sheltered Basin Structures

2.4.1 Perimeter Stabilization

2.4.1.1 Objectives. Perimeter stabilization shall be provided:

a) To retain the perimeter material or to hold it on a given slope against such internal forces as those causing sloughing or piping of material under a wall or through a revetment.

b) To prevent damage to the perimeter by external forces which might erode or damage the slope or perimeter wall through wave action, currents, and impact by floating objects.

2.4.1.2 Structures. The perimeter inside the sheltered harbor basin shall, depending on the bank conditions and the degree of stabilization required, be designed as:

a) Perimeter beach of existing or imported materials.

b) Revetted slope.

c) Gabioned slope.

d) Vertical bulkhead.

e) Some combination of the above.

2.4.2 Perimeter Beach

2.4.2.1 Slopes

a) Where economic considerations warrant the perimeter of the basin be a sand beach, the slope shall not, ordinarily, be steeper than 1 on 8 (1 on 10 for fine sand) within the maximum range of water-level fluctuation in the basin.

b) Where the shore face consists of gravel, pebbles, or similar rock fragments or sizes rather than sand, littoral transport processes are usually too weak to cause any significant lateral displacement and the slope may be increased up to about 1 on 5.

c) Underwater stable slopes at depths of 3 ft (.91 m) or more below extreme low water vary from about 1 on 4 for cohesionless fine silty sands to about 1 on l-1/4 for some clayey soils in cuts.

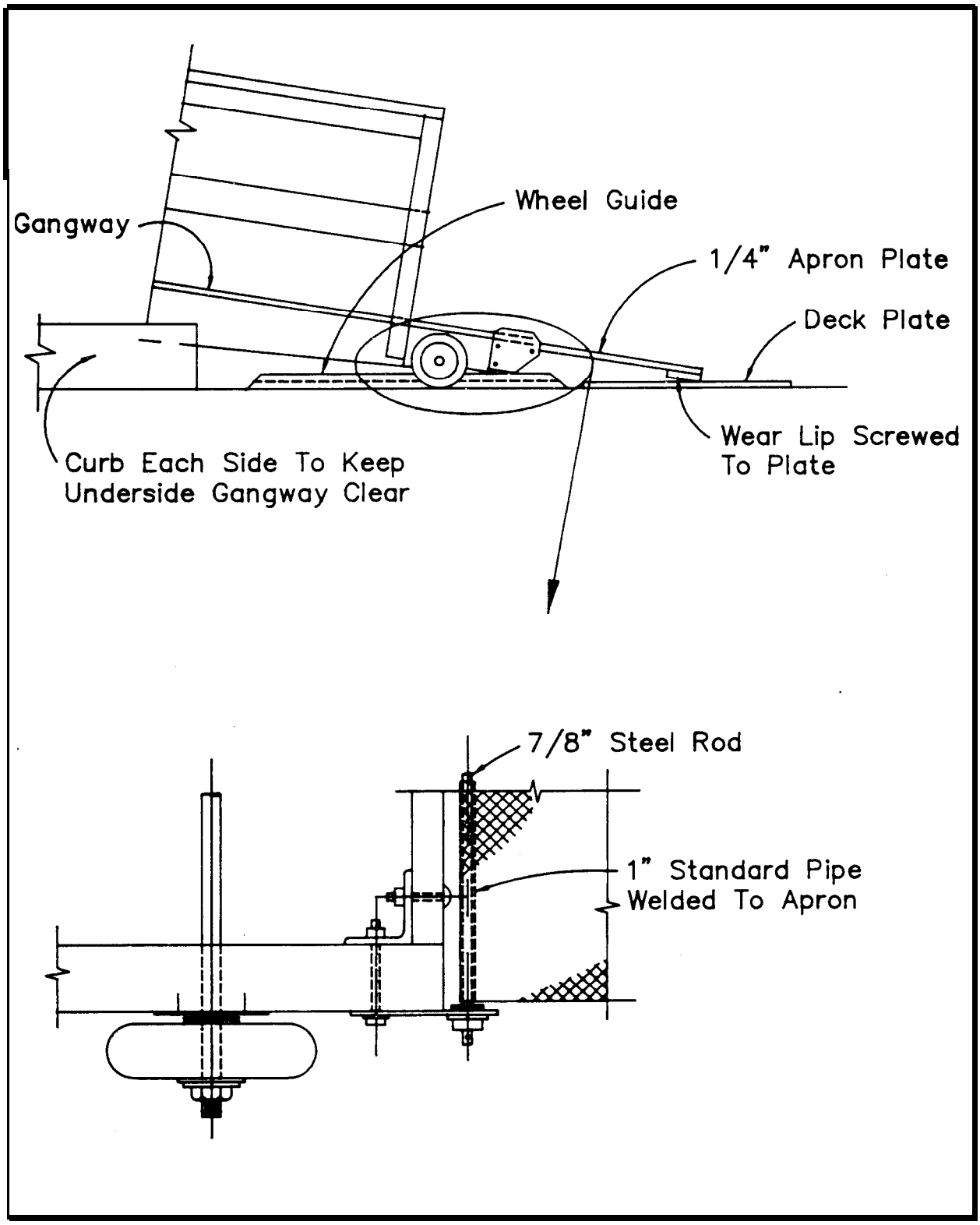

Figure 18
Framing and Hinge Detail for Pipe and Rod
Plate Hinge for Heavy Gangway

d) Bay mud and some lake-bottom materials often "fluff up" upon dredging, and will stabilize only on underwater slopes of 1 on 10 or flatter. Waste such material outside the basin and stabilize the slopes with imported sand.

2.4.2.2 Profile. Figure 19(a) represents a typical beach slope profile.

2.4.2.3 Design Details. (See Shore Protection Manual, Volumes I and II.)

2.4.3 Revetted Slope

2.4.3.1 Revetments

a) Where bank conditions require armoring the slopes, provide a revetment of armor stone layer or precast concrete slabs placed on a filter course of spalls or gravel or tough, continuous fabric cloth.

b) Revetments are normally stable only to a steepness of about 1 on 1-3/4.

c) Materials used are armored stone or precast concrete blocks.

2.4.3.2 Armoring

a) Extreme wave action and currents will determine minimum stone size of a riprap or revetted slope.

b) Because of the strong pumping action of waves and eddy currents, armor stones shall have a normal thickness of twice the average stone dimensions.

2.4.3.3 Filtering Devices. These are poorly graded gravel or stone filter and continuous, tough synthetic cloth filter.

2.4.3.4 Profile. Figures 19(b), 19(c) and 19(d) represent typical revetted slope profiles.

2.4.3.5 Design Details. (Refer to Shore Protection Manual, Volumes I and II.)

2.4.4 Gabioned Slope

2.4.4.1 Use. Where adequate small-sized stone is available, rock-filled wire mesh gabions permit installation of steep slopes for perimeter stabilization at relatively low cost.

2.4.4.2 Construction

a) Heavy-duty wire mesh baskets with rectangular sides and of convenient size tailored for construction are commercially available for shipment to site in collapsed form.

b) They are galvanized for freshwater use, and galvanized plus PVC-coated for saltwater use.

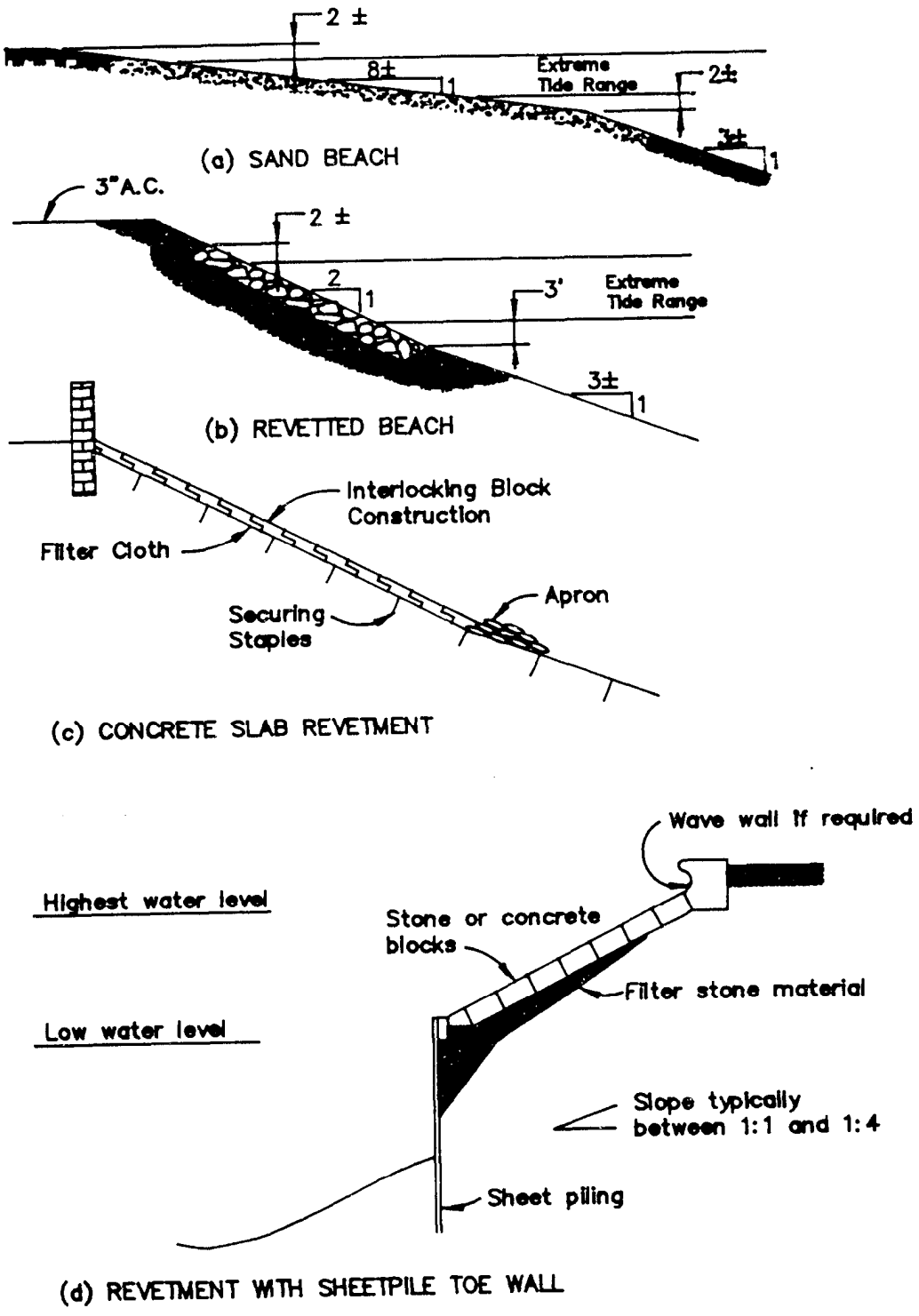

Figure 19
Typical Beach and Revetted Slope Profiles

c) The filled baskets may be placed vertically on top of each other.

d) For greater stability, they should be canted back to about a 4 to 1 batter. Battering may also be done by setback of successive rows for a terraced appearance.

e) The gabioned slope shall be backed by a layer of filter cloth to prevent the pump out of fine material from the earthbank behind it.

f) Use of gabion construction has been limited so far. Its permanence is not yet well established.

2.4.4.3 Typical Details. (See Figure 20.)

2.4.5 Vertical Bulkhead

2.4.5.1 Use Criteria. For small craft berthing basins, consider the following:

a) Vertical walls reflect waves and should be avoided where surge and partially attenuated wave penetration into the basin interior cannot be satisfactorily avoided.

b) If the site can be readily unwatered and if substrata are not so fluidic as to require deep cutoff walls, cast-in-place concrete bulkhead construction shall be used.

c) In other cases, use sheet piling bulkhead.

d) Because the perimeter wall in a small craft harbor is seldom used as a breasting dock, the bulkhead is usually carried only to the low water elevation, and a partially revetted underwater slope shall extend from the base of the bulkhead wall down to design depth.

e) The lower edge of the bulkhead wall shall extend not less than 2 ft (.61 m) below the design lowest water level. Where wave or other water action occurs, extend the walls below the lowest design low water level to a minimum depth of two times the maximum wave height to minimize the possibility of pump out of fine material from behind the wall.

f) The top of the bulkhead wall shall be 2 or 3 ft (.61 - .91 m above maximum high water.

2.4.5.2 Types. Types used for small-craft basins include:

a) Tieback pile-type timber bulkhead.

b) Steel or aluminum sheet pile bulkhead.

c) Concrete bulkhead.

d) Concrete structure with revetted slope.

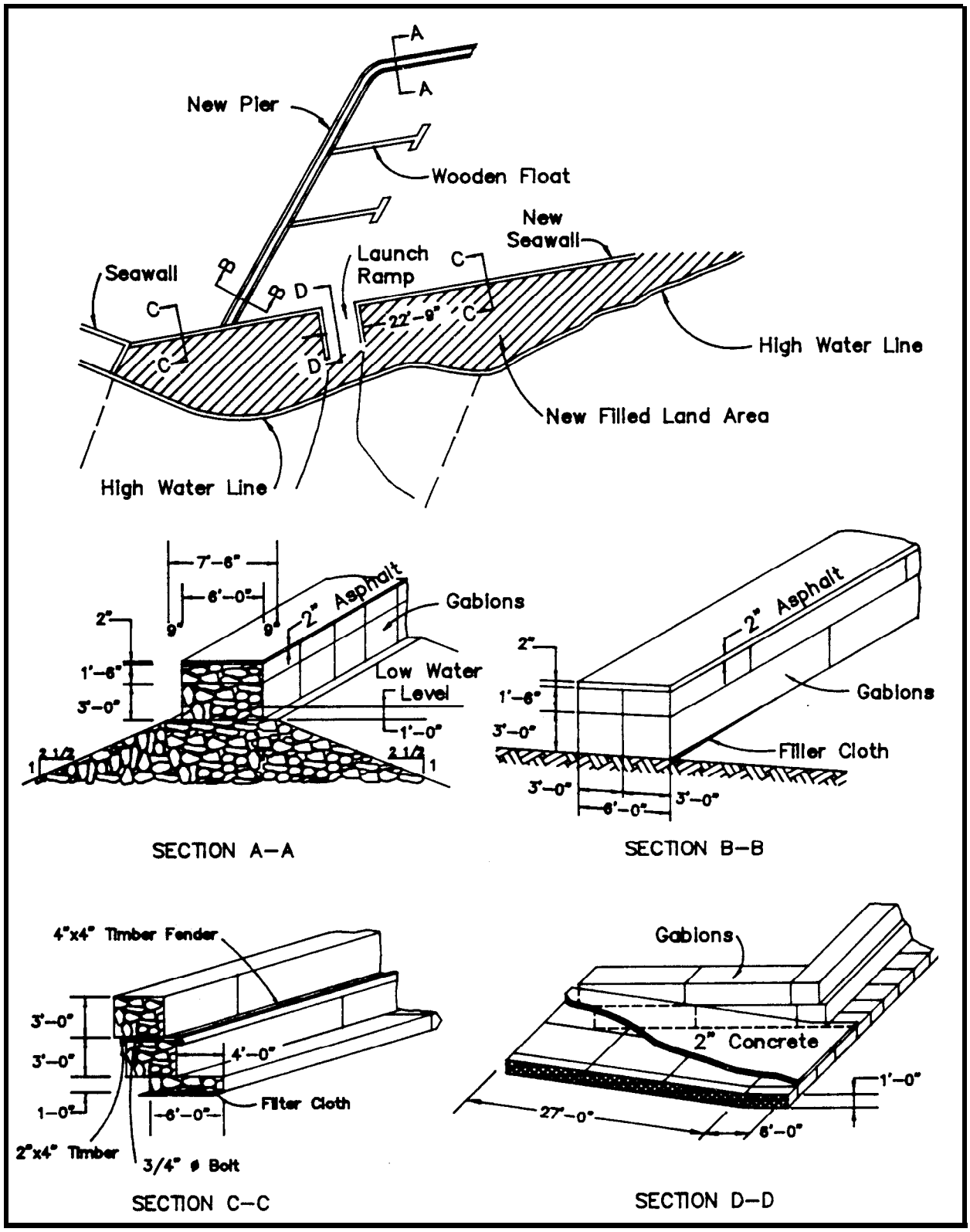

Figure 20
Typical Use of Gabions in Small- Craft Harbor Construction

2.4.5.3 Design Details. For design details, refer to DM-25.4, Seawalls, Bulkheads, and Quaywalls.

2.4.5.4 General Considerations

a) Timber bulkheads often fail because of corrosion, abrasion, fatigue failure of metal connections, or abrasion of the wood by loose connections, and not so much as a result of deterioration of wood members.

b) Steel or aluminum sheet pile bulkhead can be installed expeditiously and at a relatively low cost with lightweight sheet pile sections.

c) Commonly used construction is a concrete wall with a vertical or slightly battered face extending to about extreme low water level, and an armored slope extending from that level down to the design depth of the basin.

d) To prevent wave or eddy current scour at low water levels, armoring of revetted slope shall extend from the wall to about 5 ft (1.52 m) below extreme low water.

e) Concrete perimeter bulkheads are the most durable.

2.5 Design Criteria for Entrance Channel and Protective Structures

2.5.1 Entrance Channel

2.5.1.1 Location

a) For siting entrance or approach channel, consider:

1) Natural water depths

2) Character of waves approaching the harbor.

b) Analyze the following data:

1) Hydrographic (site bathymetry) survey.

2) Wave generation and refraction.

3) Littoral drift.

2.5.1.2 Design Criteria. These include the following:

a) To the extent the harbor configuration and conditions allow, the channel alignment shall be as close to the natural channel alignment as possible. Bends, where necessary, shall be gradual.

b) Minimum Width. For small boat traffic, provide minimum 50 ft (15.2 m) or 5 times the beam of the widest boat expected to be berthed in the basin.

c) Minimum Depth. Use the sum of the values of design draft, squat, and one-half the wave height plus overdepth requirements to obtain design minimum depth.

2.5.1.3 Construction

a) For channel construction in most bottom materials, dredge flat slopes in the channel or provide additional width or depth to contain the material sloughing from the dredged slope.

b) Type of dredging shall be decided primarily on the basis of the quantity of material to be dredged and wave exposure.

2.5.1.4 Maintenance Dredging

a) It involves removal of deposition caused by shoaling and siltation, and all floating debris.

b) In small-boat basins which are inaccessible to standard or portable dredging equipment, or where the total bed material cannot be reached by land-based equipment, maintenance work may be accomplished in one of the following ways:

1) By hydraulic pumping equipment.

2) By small floating draglines.

3) By divers

2.5.2 Breakwaters

2.5.2.1 Purpose

a) To prevent or reduce wave energy transmission into the small craft harbor basin.

b) To provide more sheltered conditions for craft and berthing facilities.

c) To protect the harbor entrance.

2.5.2.2 Design Data. Evaluate and obtain:

a) Degree of protection intended in lee of the structure.

b) Wave runup.

c) Hydrographic (bathymetric) and topographic surveys of the site.

d) Degree of permissible overtopping.

e) Hydraulic model analysis for the wave-basin space.

f) Shape and roughness of armor material.

g) Unit weight of stone, maximum stone sizes economically available for use as armor units, and size and gradation of available underlayer (bedding) material.

h) Degree of permeability permissible.

2.5.2.3 Breakwater Positioning

a) The alignment shall be approximately normal to the primary direction of wave approach with the shortest possible longshore length of structure.

b) It shall be as close to the shore as possible.

c) It should not encroach on water area needed for an entrance and fairway in its lee during normal and peak boat traffic conditions.

d) It shall be only as long as is required to effect quiet water for a safe entrance.

2.5.2.4 Design Factors

a) When a small craft harbor is built entirely offshore rather than in a basin behind the shoreline, its entire outer perimeter, except for the entrance, shall generally be a breakwater.

b) If the breakwater is in shallow water, large waves may break before reaching it. Waves generally break when the depth of water is about 1.3 times the wave height.

c) If the breakwater is in deeper water, records of the measured deepwater waves during the highest wave episode ever recorded are used to determine the design wave height. For rubble-mound design, the design wave height is the significant height of the one-tenth-percent-occurrence wave episode, i.e., will not be exceeded in wave height (for any direction within a 90 degree sector centered on the perpendicular to the breakwater's axis) more than one-thousandth of the time, or about 9 hours each year.

d) Breakwaters are seldom built to a height that will not be overtopped by the design wave.

2.5.2.5 Types. Breakwater types are as follows:

a) Shore-connected types are:

1) Rubble-mound construction (see Figure 21).

2) Stone-asphalt construction.

3) Cellular steel sheet pile construction (see Figure 22).

b) Offshore types are:

1) Rubble-mound structure for open ocean or bay exposure.

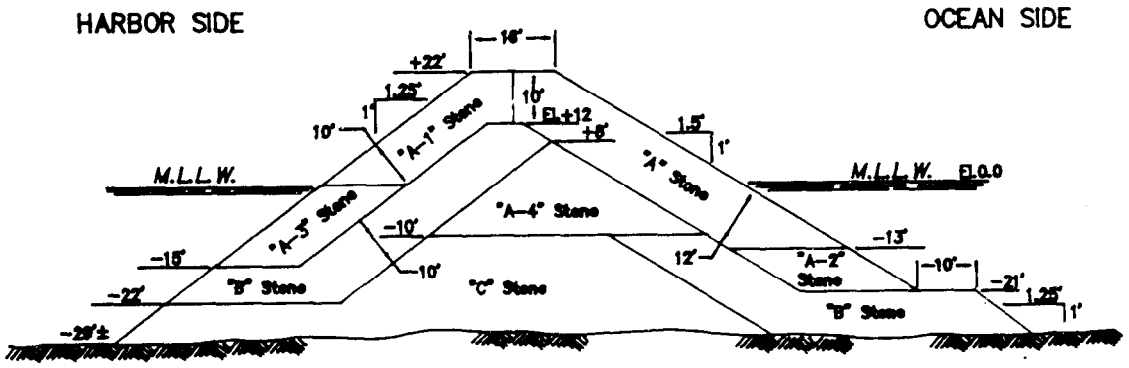

"A" Stone – 16 tons or greater
"A–1" Stone – 13 tons or greater
"A–2" Stone – 8 tons or greater
"A–3" Stone – 6 tons or greater
"A–4" Stone – 500 lbs. to 8 tons

"B" Stone – Core stone varies from quarry – run stone to pieces of 1 ton to 4 tons.

Figure 21
Typical Rubble-Mound Breakwater

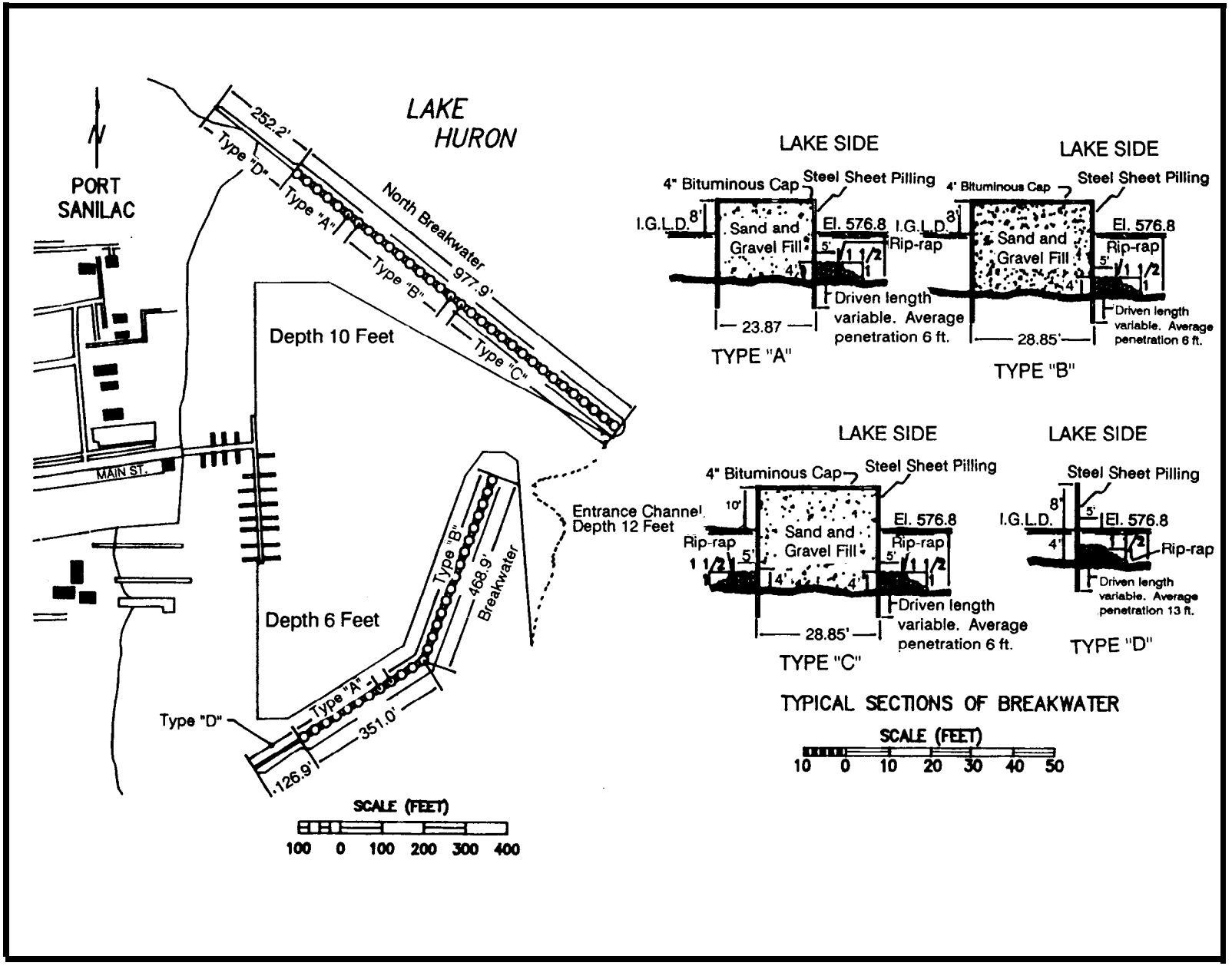

Figure 22
Typical Cellular Sheet Pile Breakwater Construction

2) Cellular steel sheet pile structure for less severe exposure.

c) Other breakwater types include:

1) Timber structure.

2) Steel structure.

3) Concrete sheet pile structure.

4) Masonry block structure.

5) Composite structures.

6) Sand-filled sheet pile structure.

7) Structure consisting of prefabricated concrete cells set side by side and securely fastened together.

8) Concrete superstructure built on a submerged rubble base.

9) Perforated Swiss-cheese breakwater, which partially dissipates wave energy in a chamber behind a perforated wall (see Figure 23).

2.5.2.6 Rubble-Mound Construction

a) Dimensional Features

1) Armor stone size and slope of primary cover layer.

2) Crest elevation.

3) Crest width.

4) Underlayers and core.

5) Layer thicknesses.

6) Bedding or filter layer, and its size and thickness.

b) Construction Factors:

1) Integrity of a rubble-mound breakwater is largely dependent on the stability of the stones and armor units of which it is built.

2) The toe of a rubble-mound structure in water shallower than about twice the design wave height may be subjected to severe scouring currents caused by wave turbulence. Bedding layer shall be carried well beyond the toe stones.

3) The bedding layer and internal layers of smaller stone sizes shall be placed before the armor layer is installed.

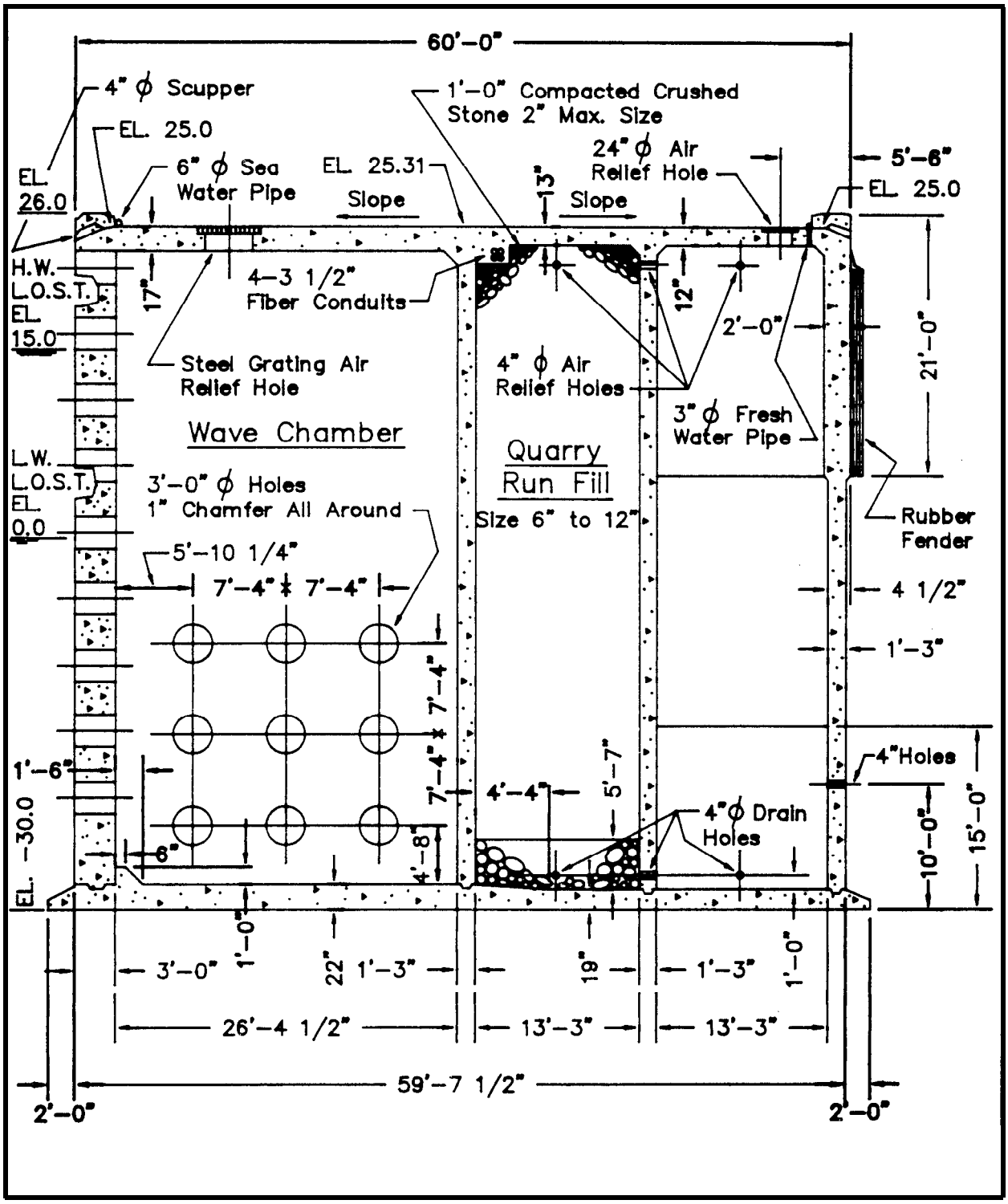

Figure 23
Typical Swiss-Cheese Perforated Breakwater Construction

4) To minimize danger of massive wave overtopping of rubble-mound breakwaters, the crown shall be three or four armor units wide and the units on the back slope down to about wave-height distance below the surface should be as large and as well placed as those on the front slope.

5) If a rubble breakwater is too porous, it will allow transmission of a high percentage of the longer-period wave energy through it, and excessive wave disturbance will occur within the interior channels, and berthing basin and areas.

2.5.2.7 Design Details. For analysis and design details, refer to Shore Protection Manual, Volume II; DM-26.1; and DM-26.2, Coastal Protection.

2.5.3 Groins

2.5.3.1 Purpose. Groins may be used to:

a) Build or widen a beach by trapping littoral drift.

b) Reduce the rate off longshore transport out of an area by reorienting a section of the shoreline to an alignment more nearly perpendicular to the predominant wave direction.

c) Reduce loss of material out of an area by compartmenting the beach.

d) Prevent accretion in a downdrift area by acting as a littoral barrier.

e) Stabilize a beach, subject to excessive storms or seasonal periods of advance and recession, by reducing the rate of loss.

2.5.3.2 Types. These include:

a) Timber groins.

b) Steel groins.

c) Concrete groins.

d) Rubble-mound groins (see Figure 24).

e) Asphalt groins.

2.5.3.3 Design Criteria. These are the same as for breakwater design. For details, refer to DM-26.2 and Shore Protection Manual, Volume II.

2.5.4 Jetties

2.5.4.1 Purpose. A jetty is a structure extending into the water to:

a) Direct or confine tidal flow into the channel or boat basin.

b) Prevent or reduce the shoaling of the channel by littoral material.

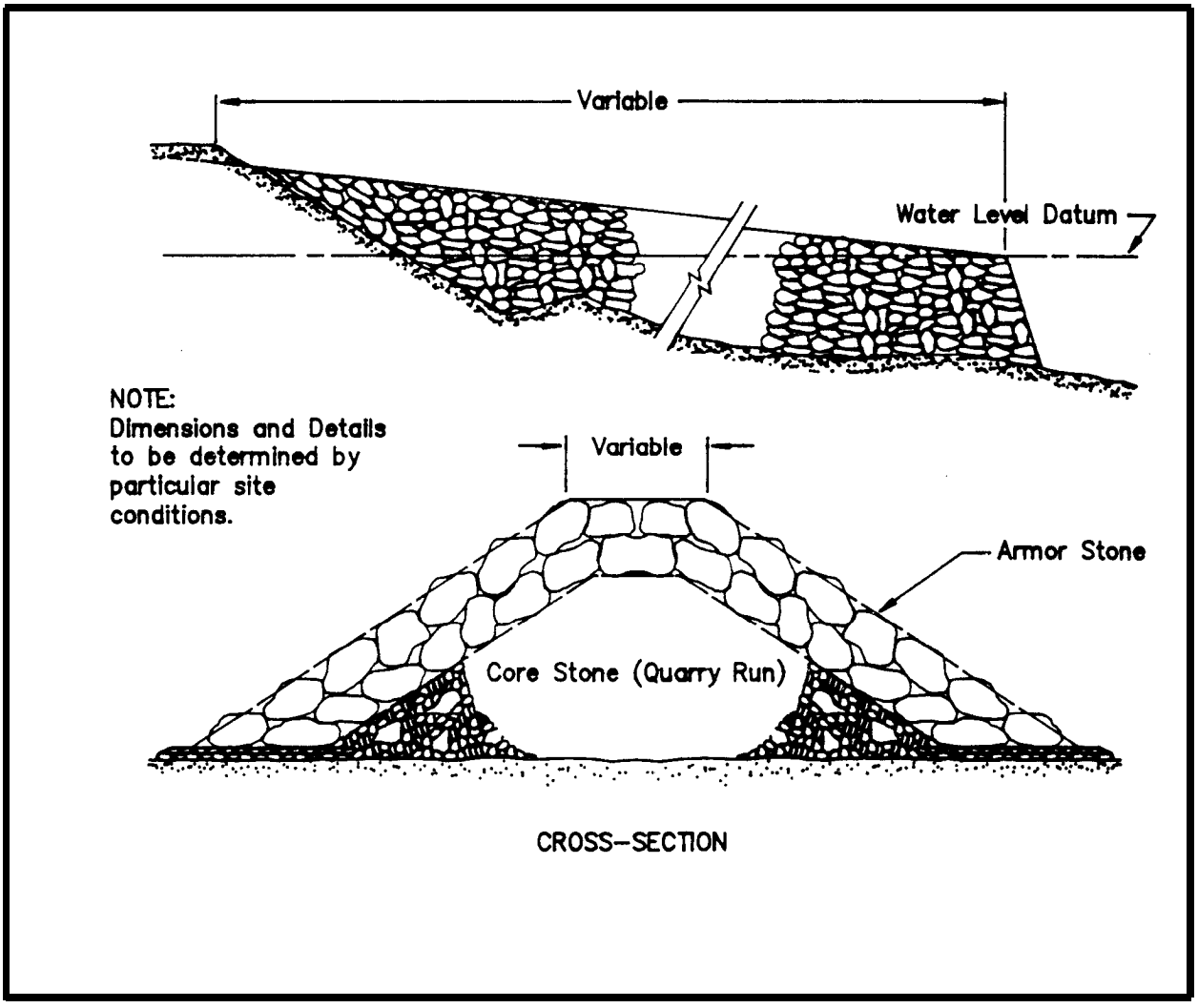

Figure 24
Typical Rubble-Mound Groin Construction

c) Protect the entrance channel from wave action and cross currents.

d) Stabilize the inlet location.

2.5.4.2 Types. These include:

a) Rubble-mound structure.

b) Sheet pile structure (see Figure 25).

2.5.4.3 Details. Refer to Shore Protection Manual, Volume II; DM-26.1; and DM-26.2.

2.5.5 Wave and Surge Dissipators.

2.5.5.1 Purpose. These devices are often provided to reduce turbulence in the boat basin caused by wave energy and surge.

2.5.5.2 Typical Devices. Some typical devices are described below:

a) A non-uniform array of large stones placed on a flat slope facing the outer entrance at the first turn in the entrance channel.

b) Wave-absorption beach, recessed in the elbow of the first bend in the channel.

c) Wave reflector, designed to reflect the waves back toward the first leg of the entrance channel.

d) Combination of a trapezoidal channel-bed section and upper slopes roughened by large stones in the revetment.

2.5.6 Bank Protection. It is often necessary to protect banks from waves and currents in the channel. Protection installations include:

a) Rubble layer placed on filter layer.

b) Sheetpile or poured-in-place concrete wall at the top and a revetted slope from the toe of the wall to the channel bottom.

2.5.7 River Protection. To berth boats directly in a river, the following methods can be used to provide protection to the berthing area.

2.5.7.1 Current Deflector Placed Upstream. This is built as a pile-dike fence inclined downstream, with heavy beams for horizontal members in the area of surface-level fluctuations to fend off floating debris.

2.5.7.2 Shallow Basin Excavated into the Riverbank (see Figure 26).

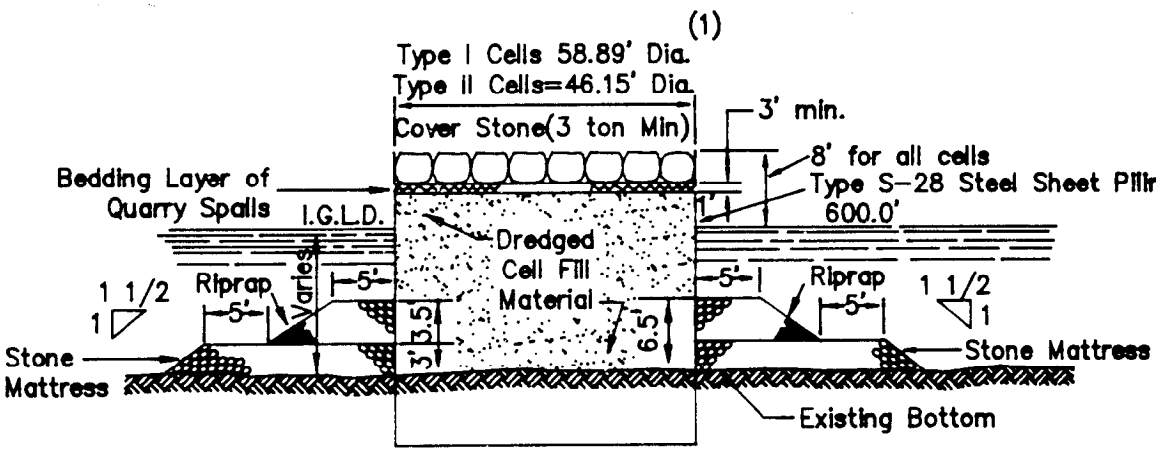

CROSS SECTION

(1)
Type I Cells for deep water
Type II Cells for shallow water

Figure 25
Typical Sheetpile Jetty Construction
For details, see Shore Protection Manual, Volume II.

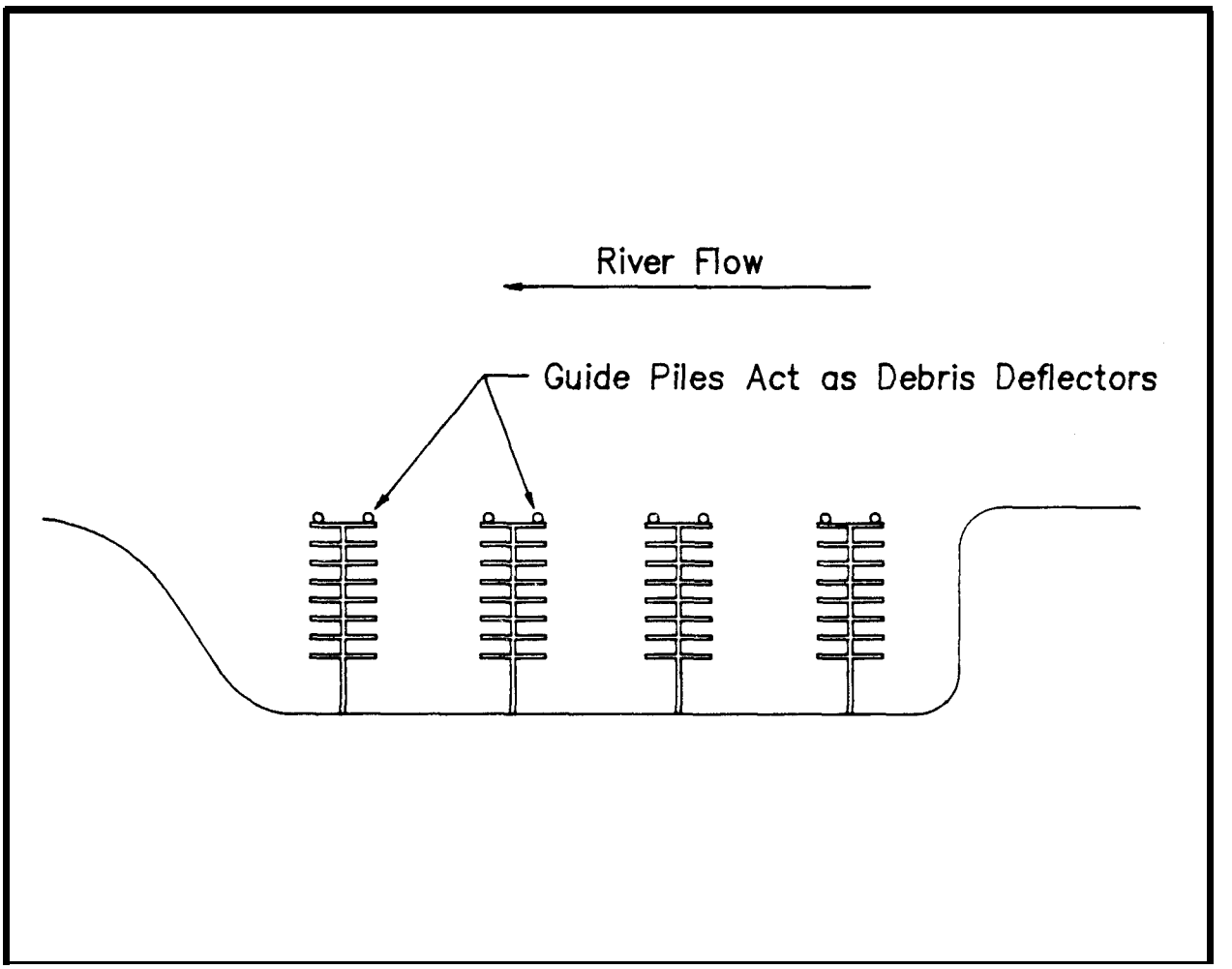

Figure 26
Typical Shallow Boat Basin Excavated into Riverbank (Schematic)

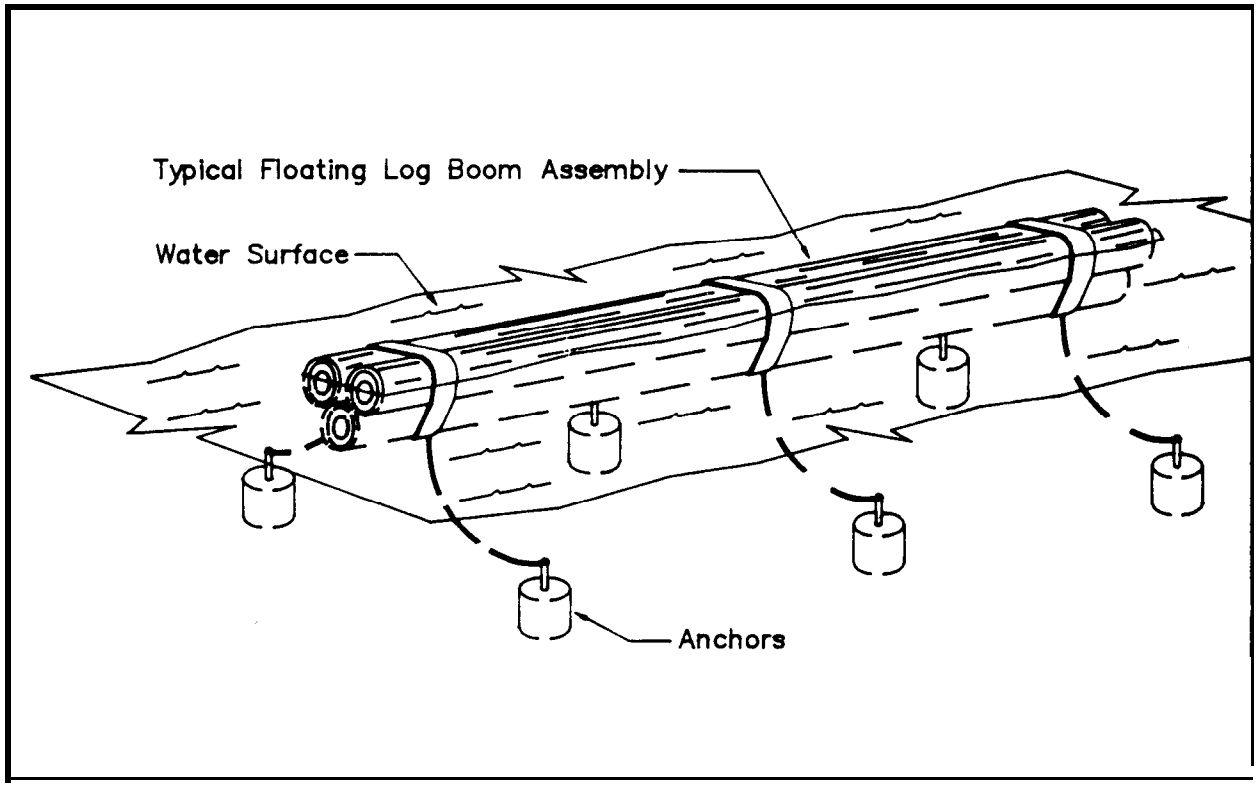

Figure 27
Typical Chained-Log Boom
for Short-Period Wave Attenuation

2.5.8 Floating Wave Attenuators. These are capable of reducing moderate waves to acceptable proportions. Types are:

a) Chained-log boom used mainly on rivers and small lakes (see Figure 27).

b) Floating breakwater of modular polyolefin pontoon units secured by timber stringers.

c) Worn out rubber tires secured together to form a continuous porous mass that floats just above the surface.

d) Air-filled mattress at the surface or suspended at some distance below the surface to achieve out-of-phase damping.

e) Thin membrane on the surface to achieve viscous damping.

f) Random arrangements of horizontal pipes to destroy orbital wave motion.

g) Various solid structures with void patterns designed to break up wave motion.

h) Series of vertical diaphragms.

2.6 Design Criteria for Support Facilities

2.6.1 Utilities. For water and electrical systems, and sanitary requirements, refer to MIL-HDBK-1025/2, Dockside Utilities for Ship Service. The following additional utilities shall be provided:

a) An intercommunication system, such as a public address or paging system with speakers located within easy hearing distance of every slip and support facility.

b) A central telephone switchboard in the harbor administration building.

2.6.2 Locker Boxes and Fire Equipment

2.6.2.1 Locker Boxes

a) Provide locker boxes for gear storage and for structural support for fixtures.

b) Locate boxes in the knees of floating systems or in some out-of-the-way spot on decks of fixed piers.

c) Boxes shall be made of plywood, sheet metal, or fiberglass.

2.6.2.2 Firefighting Equipment

a) Chemical firefighting equipment may be used, if warranted, and placed at 200 ft (60.1 m) intervals along each main walk.

b) Cabinets housing the equipment shall be painted red.

c) Place fire-alarm boxes at convenient locations or on near piers. Spacing shall conform to requirements of NFPA 87, Construction and Protection of Piers and Wharves.

2.6.3 Fuel Docks and Pump out Stations

2.6.3.1 Fuel Docks

a) Fuel docks must be rugged, support the fuel pumps, and take aboard the lines from the buried tanks ashore.

b) Floating systems shall require flexible fuel lines leading to the fixed lines installed in the dock.

c) Provide a quick-disconnect device at the high point in each fuel line to prevent the siphoning of the storage tank contents into the basin in the event of a line break below the stored-fuel level.

2.6.3.2 Pump out Station. Pump out facilities are generally placed on or near the fuel dock so that fueling and pump out can be accomplished successively at the same place. However, the pump out station should not be too close to the fuel pumps.

2.6.4 Cleats and Fenders

2.6.4.1 General. Every dock or slip requires a set of cleats for mooring lines and fenders to cushion the impact of moored or drifting craft against the dock.

2.6.4.2 Cleats

a) Use cleats made of metal, either galvanized or of noncorroding alloys, or hardwood.

b) Provide cleats of 10 or 12 in. (254 or 305 mm) length for boats up to 40 ft long (12.1 m), and 16 and 20 in. (406 and 508 mm) long for craft up to 75 and 100 ft (22.9 and 30.5 m) long.

c) Cleats shall be securely bolted to the framework with through bolts rather than lag bolts.

d) For cleat arrangement pattern, one cleat near the knee and one at the end of a finger (on each side) shall serve boats up to 35 ft long (10.7 m). For larger craft, provide one additional cleat per side for each additional 30 ft (9.1 m) or part thereof.

e) If cleats are used on loading docks or fuel docks designed for breast mooring, they shall be sized for the largest craft and spaced at about 15 ft (4.6 m) intervals. Alternatively, provide a continuous curb rail supported on blocks spaced at about 3 ft (.91 m) apart for tying mooring lines.

f) In a double-boat slip system, provide two cleats about 3 ft (.91 m) apart secured to the edge of the headwalk and centered between the two fingers.

2.6.4.3 Fenders

a) Fendering systems may include old rubber tires, discarded firehose, or hemp hawsers of makeshift quality for the bumper elements. Special synthetic extrusion or molded shapes are preferred for small craft dockage in floating systems.

b) The preferred type of bumper stripping for the edge of a finger or dock is a synthetic extrusion that runs along the top edge of the outside stringer with a lip extending over the top. Neoprene and butyl rubber provide adequate weathering resistant and resilient bumper materials.

c) Molded corner bumpers, also of synthetic extrusion, provide adequate protection for smaller craft. For larger craft, use corner wheels especially where the finger extends all the way out to an interpier fairway (primarily on floating system).

d) Plastic-tube vertical fenders, stretched between points of support or suspended from a top fastening with a heavy pendulum weight hanging below the lowest possible point of hull contact, are also in use.

e) Fendering of fixed piers shall usually run vertically rather than horizontally. Most common fenders for fixed systems are vertical timbers spaced at 8 to 10 ft (2.4 - 3.05 m) intervals along each side of a finger pier. Size of timber shall range from 3 by 4 in. to 8 by 8 in. depending on the size of the berthed craft.

f) Lengths shall be determined by the need to extend upward above the highest part of a gunwale at extreme high water and to extend below the lowest rub strake at extreme low water.

g) Pier attachments shall be adequate to resist any moment that might be caused by cantilever bending loads up to the design moment of the fender section.

h) Bolt heads or nut-and-bolt ends shall be countersunk into the fender pieces to avoid scoring of boat hulls.

2.6.5 Launching Hoists, Elevators, and Ways

2.6.5.1 Types. Most common types of equipment used in connection with small craft berthing facilities for transferring boats between land and water are listed below:

a) Davits.

b) Forklift trucks.

c) Jib-boom cranes.

d) Lift slips.

e) Marine railways.

f) Mobile cranes.

g) Overhead rail launchers.

h) Stiff-leg derricks.

i) Straddle-truck boat hoist.

j) Vertical-lift platforms.

2.6.5.2 General Characteristics.

a) Davits are for smaller craft and lack the versatility of other launching devices.

b) Marine railways entail high cost and waste of space, and lack versatility. versatility.

c) Mobile cranes, either truck-mounted or crawler-mounted, are justifiable only where used in conjunction with some ancillary operation requiring this equipment.

d) Vertical-lift platforms are used mainly for craft larger than 25 tons.

2.6.5.3 Functional Characteristics of Different Types

a) Forklift truck has a fork ladder with the capability of hyperextending down over a bulkhead wall to the depth required to place the forks under the hull of a floating boat. Forklifts are best suited for small-craft harbor basins with small water level fluctuation.

b) Jib-boom cranes have relatively short reach of the boom and are geared to a slower operation.

c) Three types of lift ships are in use:

1) The elevating work slip that raises the boat out of the water so that the hull may be washed or minor damages to hulls, rudders and screws repaired. The boat remains on a cradle or in a sling in raised position above the water only until the operation is completed.

2) A pair of hoists that remains as part of the berthing facility holds the craft above the water while not in use.

3) A fixed-framework hoist that will allow the waves to pass through the supporting legs without overturning. It is used for berthing sites along large lakes or bay shores that cannot be protected easily against wave action.

d) Overhead-rail launchers, either monorail or duorail, function the same way as a straddle vehicle except that they are not mobile. Overhead rail is pushbutton-operated.

e) The still-leg derrick has the rotational problem of the jib crane and also requires greater operator skill, and a tagline crew to control the craft while in the air. Derricks shall be installed for handling larger craft.

f) Straddle-truck boat hoist is limited to the boat size and straddle clearance, and shall be used in conjunction with a launching well or parallel piers. The hoist is completely mobile.

2.6.5.4 Typical Facility. Figure 28 represents a hoist-launching facility with dry storage.

2.6.6 Launching Ramps

2.6.6.1 Slope. Slope of the launching ramp ranges between 12 and 15 percent. Few trailered boats can be launched with a ramp slope flatter than 12 percent without submerging wheel hubs of the trailer. Many trailered boats cannot be launched with hub submergence even on a 15 percent slope. Use either a trailer-tongue extension or launch the craft with a hoist.

2.6.6.2 Surface

a) Ramp surface should be paved down to an elevation of 3 ft (.91 m) below extreme low water to ensure that trailers are not backed over the lower end. The top should be rounded over on a 20 ft (6.1 m) vertical curve until it becomes nearly level at about 2 ft (.61 m) above extreme high water.

b) The wetted part shall be paved with portland cement concrete.

2.6.6.3 Approach. Nondirectional traffic circulation shall be provided with sufficient maneuvering space, approximately 50 ft by 50 ft (15.2 - 15.2 m) adjacent to the top of the ramp.

2.6.6.4 Bottom. Bottom of the ramp shall end in a level shelf of loose gravel so that a vehicle losing brakes or traction would be stopped before sliding deeper into the water.

2.6.6.5 General Features

a) A single-lane ramp shall not be narrower than 15 ft (4.6 m) and a multiple-lane ramp should not have raised divider strips.

b) Provide about 40 to 50 ft (12.2 - 15.2 m) maneuvering room beyond the top of the ramp on a gentle rampward slope of about 1 on 50 for proper surface drainage.

c) Provide boarding docks, preferably, on each side of the ramp and extending out into or along the sides of the basin with a total boarding length of at least 50 feet along each ramp.

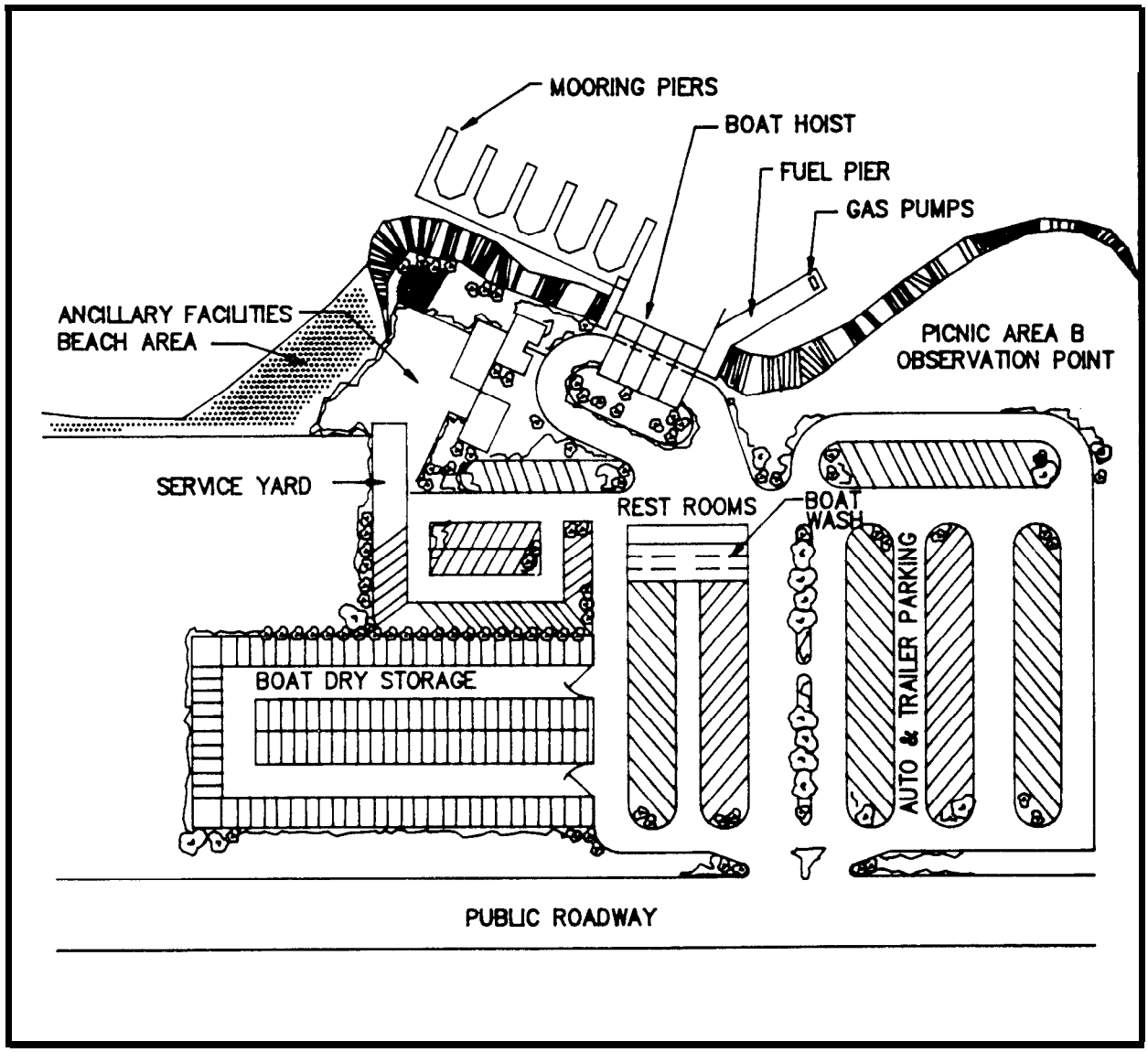

Figure 28
Typical Hoist-Launching Facility With Dry Storage Yard

d) Provide sufficient protected holding area in the water just off the ramp and boarding dock location for boats awaiting their retrieval turn during peak hours.

e) Any part of the ramp that must be placed underwater should be of precast sections. One method used successfully is 6 by 12 in. (152.4 - 305 mm) precast slabs that are a lane-width long, spaced 3 in. (76.2 mm) apart, perpendicular to the slope, and the gaps filled with gravel. Submerged ramps are also tremie-poured.

f) Provide a conveniently located washdown facility for ramps leading into saltwater or polluted waters.

2.6.6.6 Typical Layout. For layout of a typical launching ramp facility, see Figure 29.

2.6.7 Support Buildings and Ancillary Structures

2.6.7.1 Administration Building. Two or three rooms should be provided for a small installation and several rooms for headquarters of a large-sized small craft berthing facility. Functions and features to be handled are as follows:

a) Clerical reception office with counter for transacting the operational business and lounge space.

b) Large record board displaying a graphical layout of the berthing facility, number or letter description of each slip and docking area, and the occupancy status.

c) Record files containing facility maintenance records, utility service records, employee records, and fireproof vault for their safekeeping.

d) Manager, harbormaster, or the office of the dock supervisor.

e) Communication center for relaying incoming and outgoing calls and operating the paging or public address system.

f) Restroom facilities.

g) Supplemental facilities (boardroom, coffee-break room or snack bar, engineering room, and storage room) for large installations.

2.6.7.2 Maintenance Building and Yard for Storage. For typical layout, see Figure 30.

2.6.7.3 Boat Repair Facility. This is usually a part of, and immediately adjoining, a hoist or elevator. In small installations where only lighter craft are handled, four-wheel, castered dollys are used for transporting boats from retrieval areas to working area. For heavier craft, large-capacity elevators are accompanied by a rail system with a transfer pit for shunting boats on fixed-axle dollies from one track to another. A covered area with a gantry crane should be provided for performing engine and hull repair.

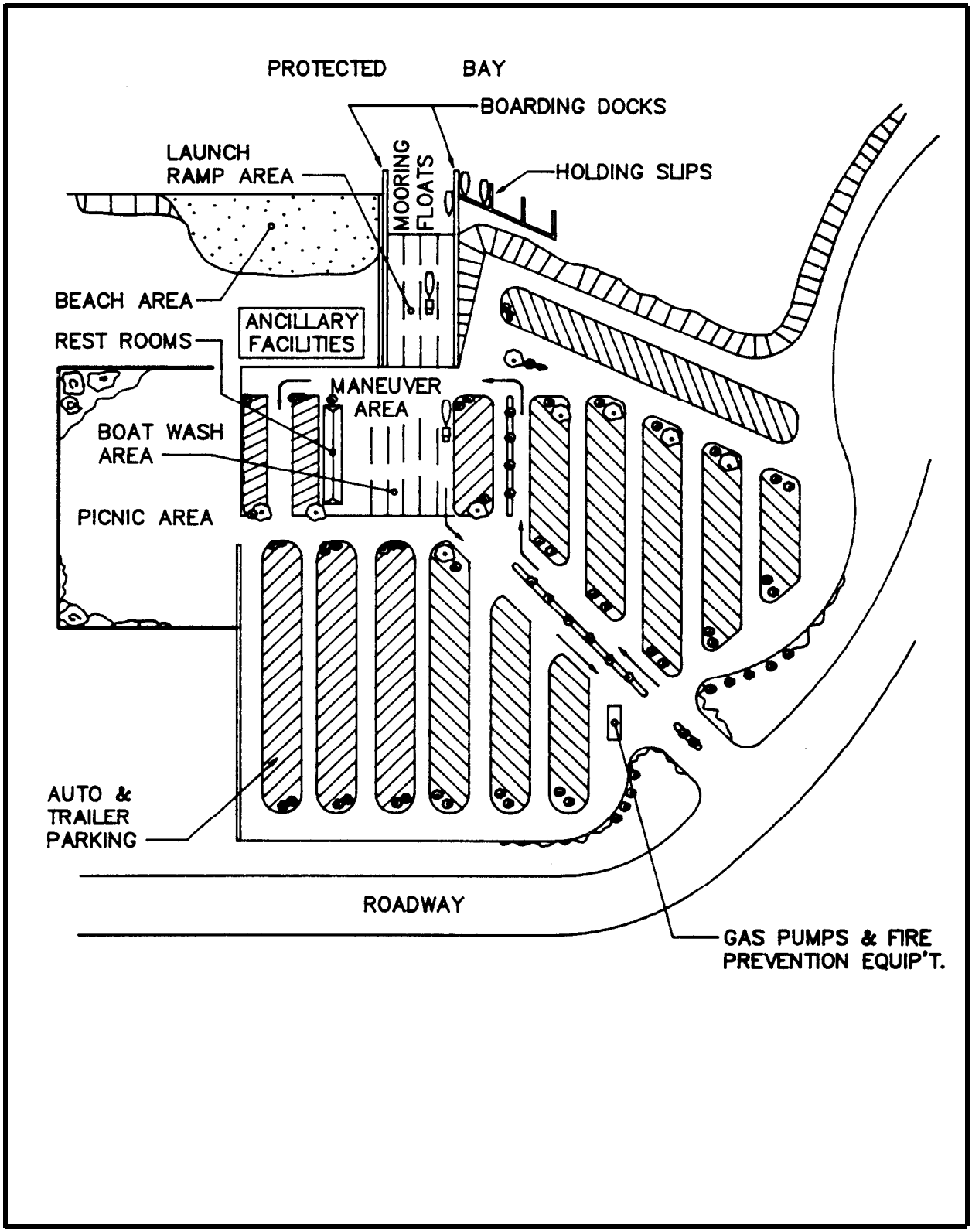

Figure 29
Layout of a Typical Launching Ramp Facility

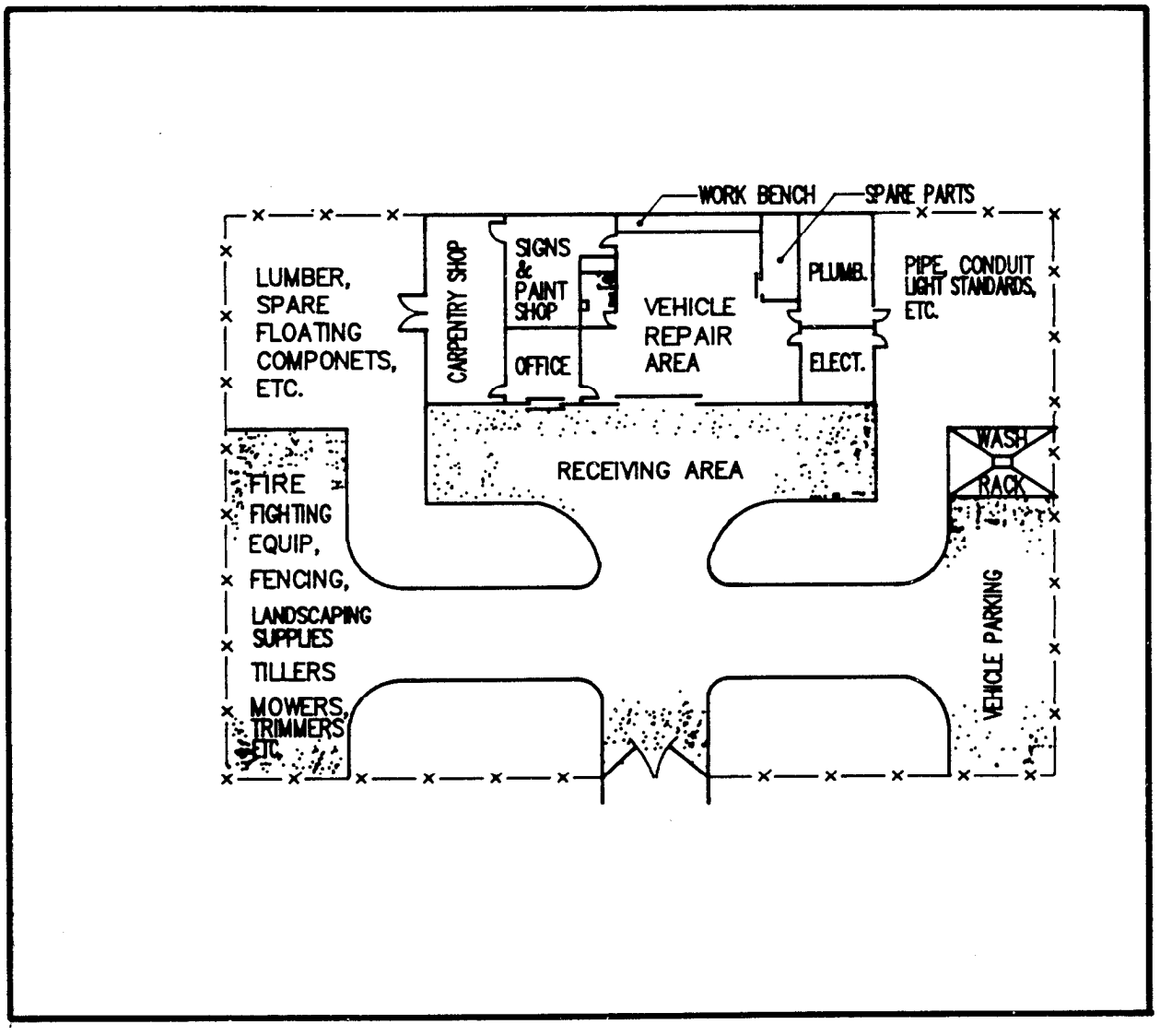

Figure 30
Typical Maintenance Building and Yard Layout

2.6.7.4 Hardware Supply Store (Optional)

2.6.7.5 Transient Housing Facilities. These are restaurants, snack bars and recreational facilities.

2.6.7.6 Road and Walkway System. Adequate lighting shall be provided to ensure smooth traffic circulation and pedestrian access to all the facilities in the harbor complex.

2.6.7.7 Layout of Utilities. Routing pattern for utility lines, storm drains and sanitary sewers in the land area of the boat basin complex.

2.6.7.8 Perimeter Fencing. Perimeter fencing shall be provided with locked entrance gates.

2.6.8 Dry Storage

2.6.8.1 Purpose. Dry storage along with wet storage is needed for lack of sufficient space in protected waters or to keep craft dry when not in use.

2.6.8.2 Storage Criteria. Dry storage shall be limited to boats not exceeding 2 tons. Sailboats under 16 ft (4.9 m) shall be stored by hand, keep up in racks. Powerboats under 24 ft (7.3 m) shall be stored with forklifts, right side up in racks. Larger powerboats and sailboats shall be stored on special trailers or on adjustable cradle dollies.

2.6.8.3 Use Criteria

a) In saltwater areas, hulls of dry-stored boats should be hosed with freshwater before storage.

b) For launching small boats from dry storage, a hinged floating ramp may be used (see Figure 31). The boat is placed on a two-wheeled dolly, and then moved down the ramp until the wheels rest against the bottom stop curb. The boat is then pushed off into the water. Device is suitable for dinghies, small sailboats, and small outboards and where water level changes are not too great.

2.6.9 Signs. The following signs are generally provided in a small-craft facility.

a) Welcoming sign at the entrance.

b) Direction signs where appropriate.

c) Signs designating buildings.

d) Signs for parking regulations, boat usage schedules, pier and slip designations, ramp and hoist use regulations, and sanitation and antipollution regulations.

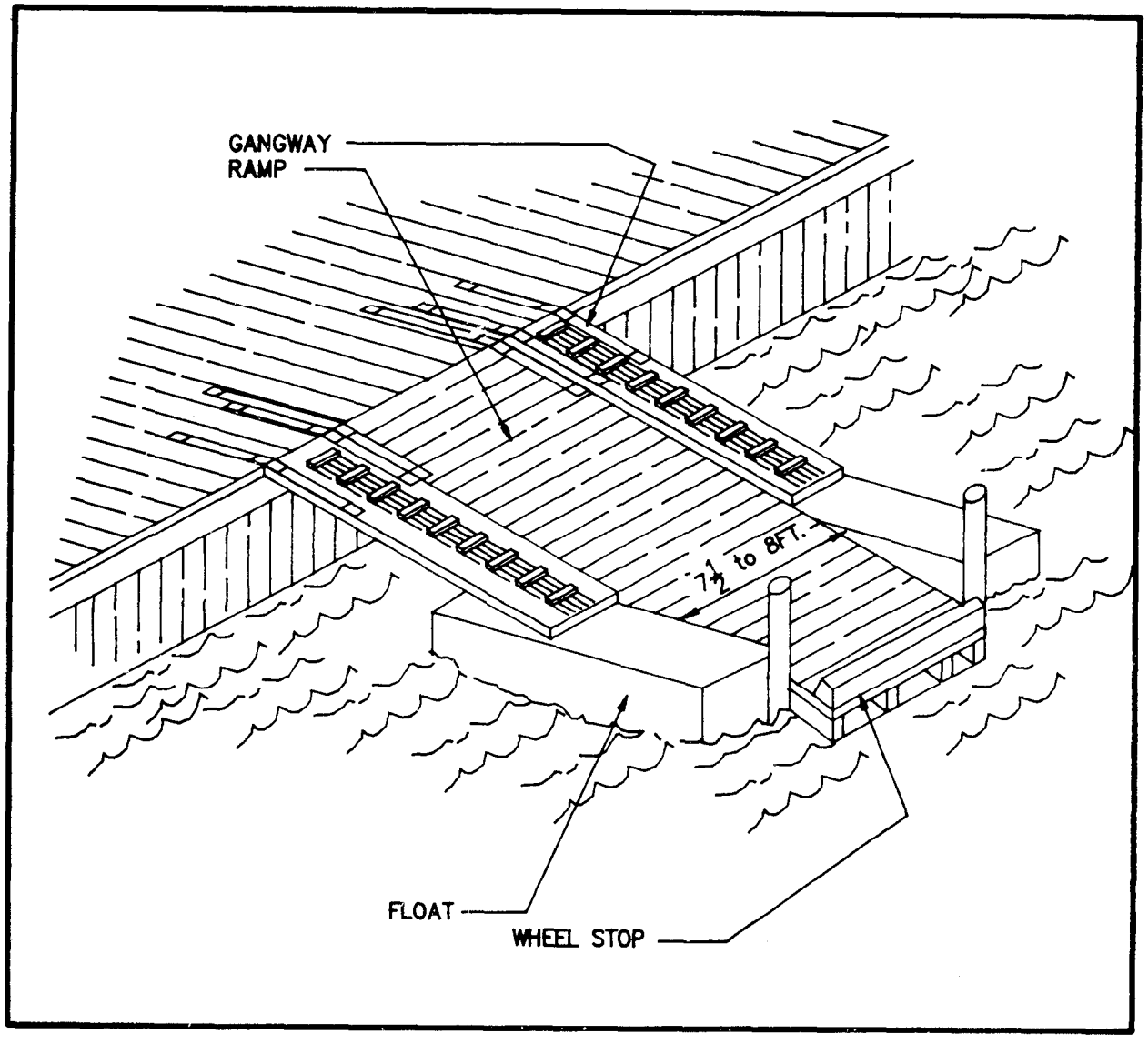

Figure 31
Typical Hinged Floating Launching Ramp Used for Small Boats

2.7 Environmental Factors and Protection

2.7.1 Snow

2.7.1.1 Factors

a) In colder regions, floating-pier systems are seriously affected by excessive snow loads. Only the covered floating berths are apt to be submerged by a heavy snowfall.

b) Most roofs of floating sheds cannot be made steep enough to ensure that the snow will slide off. Roof area multiplied by 6 times the anticipated maximum snow depth in feet will give the extra weight in pounds that is carried by flotation. If this exceeds the design live load, the amount of flotation should be increased sufficiently to support the difference without submergence of the flotation units.

2.7.1.2 Protection. Measures may include the following:

a) Boats berthed in the open during the snow season in cold regions shall be covered with tarpaulins, fitted canvas or reinforced plastic covers.

b) To protect against the submergence of floating systems, boats are removed from the water to dry storage before the winter season sets in. A common practice is to store the larger craft on cradles on land and cover them during the winter season. Smaller boats are generally stored with the keel up for better shedding of snow and rain.

2.7.2 Ice

2.7.2.1 Protection. Methods for reducing ice damage include:

a) In regions where temperature drops are not excessive and natural freezing does not cause a thick ice sheet, ice formation can be prevented near piles and floating slips by forced convection currents. This system is based on the principle that water reaches its maximum density at about 39 °F (4°C) and tends to stratify in layers with the heaviest on the bottom. Forced convection of this warmer but denser water from the bottom to the surface when the surface temperature approaches 32 °F (0 °C) will prevent or at least postpone freezing.

b) If a bubbler system is not used, sheet ice damage can be reduced or prevented by proper design provisions. Piles are driven deep enough in some materials to develop sufficient withdrawal resistance against lifting by ice. Flotation components of floating systems are designed with rounded or tapered bottoms.

c) On rivers, estuaries and lakes, the following measures are often expedient:

1) Pile clusters, often with sloping tops, are placed in the path of ice floes to break them up and divert them from the harbor basin.

2) Breakwaters or jetties provide sufficient ice-impact protection.

3) Deflecting booms made of logs or heavy timbers are used and sited to protect the berthing area from drifting ice.

2.7.3 Hurricanes

2.7.3.1 Protection for Berthed Facilities. In regions where hurricane winds prevail, provide pile guides, and cable or chain-anchorage systems for floating docks. These are capable of accommodating design fluctuations of water level and resisting lateral wind forces.

2.7.3.2 Protection for Structural Components. Decking, roofs, and other major and minor provisions at dockage shall be anchored down or fastened together to prevent movement and possible collision with berthed craft or harbor structures.

2.7.3.3 Design Provisions. Use of hurricane-type shutters and avoidance of structural projection in the design of structural components would be expedient.

2.7.3.4 Emergency Precautions. Emergency precautions to avert or minimize the severity of hurricane damage and to prevent injury include:

a) Remove all loose or fragile items to a protected area.

b) Open a door or window on the lee side of all buildings to balance pressures.

c) Lash racked dinghies or other small, dry-stored boats that cannot be moved indoors.

d) Disconnect all electrical appliances that are not needed during the emergency.

e) Tighten or reinforce the mooring lines of all berthed craft.

f) Provide a system of lifelines for dock personnel who must inspect the facilities during the storm.

2.7.4 Oil Spills

a) If the harbor basin has a narrow entrance, releasing a continuous curtain of air bubbles from the bottom all the way across the entrance will keep the oil out.

b) Once spilled oil enters the basin, removal is accomplished by employing floating booms, oil skimmers, and straw absorption.

2.7.5 Floods

2.7.5.1 Nature of Damage. Flood damage, at harbor sites on or near a river, is in the form of debris accumulation and collision of floating objects with structures.

2.7.5.2 Protection. Provide training wall as protection against debris and shoaling hazards.

2.8 Summary of Common Design Problems

2.8.1 Problems. The problems most commonly reported for small-craft berthing facilities are listed in paras. 2.8.1.1 through 2.8.1.6.

2.8.1.1 Ice

a) Windblowing or movement by currents of ice floes constitutes a serious regional problem. Free-floating cake ice is the greatest cause of ice damage.

b) If feasible, piles shall be driven butt-end down where ice formation is anticipated.

c) In a floating-pier system, the greatest damage is caused by ice crushing the floats. Forced-convection or bubbler systems are effective for ice prevention.

2.8.1.2 Corrosive Environment

a) Failure of low-level lighting systems due to sea spray in high wind conditions is a problem.

b) Frequency of corrosion of water valves by seawater necessitates the selection of T-type faucet handles over the circular type.

c) Use of untreated wood for decking or structural members of fixed piers.

2.8.1.3 Fuel Dispensing

a) Fueling boats during extreme low water levels at fixed-pier stations.

b) Reliability of fuel line connections to floating-pier stations.

2.8.1.4 Floating-Pier Systems

a) Difficulty of adjusting chain or cable anchorages during water level fluctuation cycles and tendency of these systems to drift beyond desirable limits.

b) Time and difficulty involved in seasonal removal and storage of floating systems at locations requiring winter security.

2.8.1.5 Shoaling of Channels and Basins

a) It constitutes a difficult maintenance-dredging problem.

b) Detailed surveys of site bathymetry, suited to the site, should always be acquired.

2.8.1.6 Boat-Wake Problems. Enforcement of speed regulations for craft operated near berthing areas is essential.

Section 3: DEGAUSSING AND DEPERMING FACILITIES

3.1 Degaussing. This is the process by which a ship or boat, or a portion of the vessel, is equipped with a cable to neutralize the magnetic polarity of the vessel by electric means, as a protection against magnetic mines. This process also enables the vessel to approximate the effect of a nonmagnetic ship or boat. The cable is arranged around the hull and fed with a current of the correct magnitude to neutralize the magnetic effect of the hull. Continuous application of current, with adjustment to suit changes of position or heading of the craft, is required to maintain a degaussed condition.

3.2 Deperming. This process consists of removing, as far as feasible, the permanent magnetic characteristics of the hull of the ship by powerful, external demagnetizing coils.

3.3 Criteria. Special facility requirements for degaussing and deperming craft include special electric power and strategic work areas for obtaining pertinent measurements. The location will depend on site conditions and the location of craft berthing facilities.

Section 4: FERRY TERMINALS

4.1 Ferry Terminal. Typical layout of ferry terminal facilities and their arrangement is shown in Figure 32.

4.2 Slips. These consist of water areas directly in front of transfer bridges usually bordered by fender racks. Water depths depend on ferries to be accommodated, and shall conform to project requirements.

4.3 Fender Racks. These racks usually diverge offshore with inshore ends closely fitting the end contours of ferry boats. Widths of offshore openings are determined by the different vessels accommodated and site location. The tops of the racks shall be high enough to enclose the guard rails of the ferries at maximum tide elevations. Figure 33 shows a typical fender rack.

4.3.1 Design Loadings. Racks shall be designed to deflect an approaching ferry towards the transfer bridge. Approach velocities up to 4 knots may be considered at incident angles up to 20 degrees for large ferries. Points of pile fixity shall be as indicated in the section on piling of MIL-HDBK-1025/6, General Criteria for Waterfront Construction.

4.3.2 Construction Details. General construction shall conform to the requirements of DM-25.6.

a) Fender rack piles shall be connected by heavy, longitudinal timbers to distribute vessel impacts along an entire rack.

b) Provide dolphin clusters at offshore ends of racks.

c) Where more than one row of piles is used in a rack, stagger rear rows from the forward ones and, if necessary, cut off at lower elevations.

4.4 Ferry Transfer Bridges. Provide lengths sufficient to hold ramp slopes within practical limits at extreme tides and drafts (for example, 10 percent for trucks and passenger vehicles). The offshore lines should be curved to fit ends of accommodated ferry boats. Figure 34 shows a typical ferry transfer bridge.

4.4.1 Operation. Height adjustments of bridge ends are made by hand- or power-operated winches. Lateral adjustments are not made since ferries are aligned with transfer bridge connections.

4.4.2 Design Considerations. Loads on operating machinery should be relieved by counterweights. The offshore end of a ramp should be fitted with hardwood, iron brackets, or toggles which may bear on the deck of a ferry boat. The inshore end of a bridge shall be supported on rollers, hinged rollers, or sliding bearings, and shall bear longitudinally against spring or rubber buffers that adequately absorb shocks of incoming boats. Bridges shall be provided with winches for taking up slacks in mooring lines from ferries to transfer bridges.

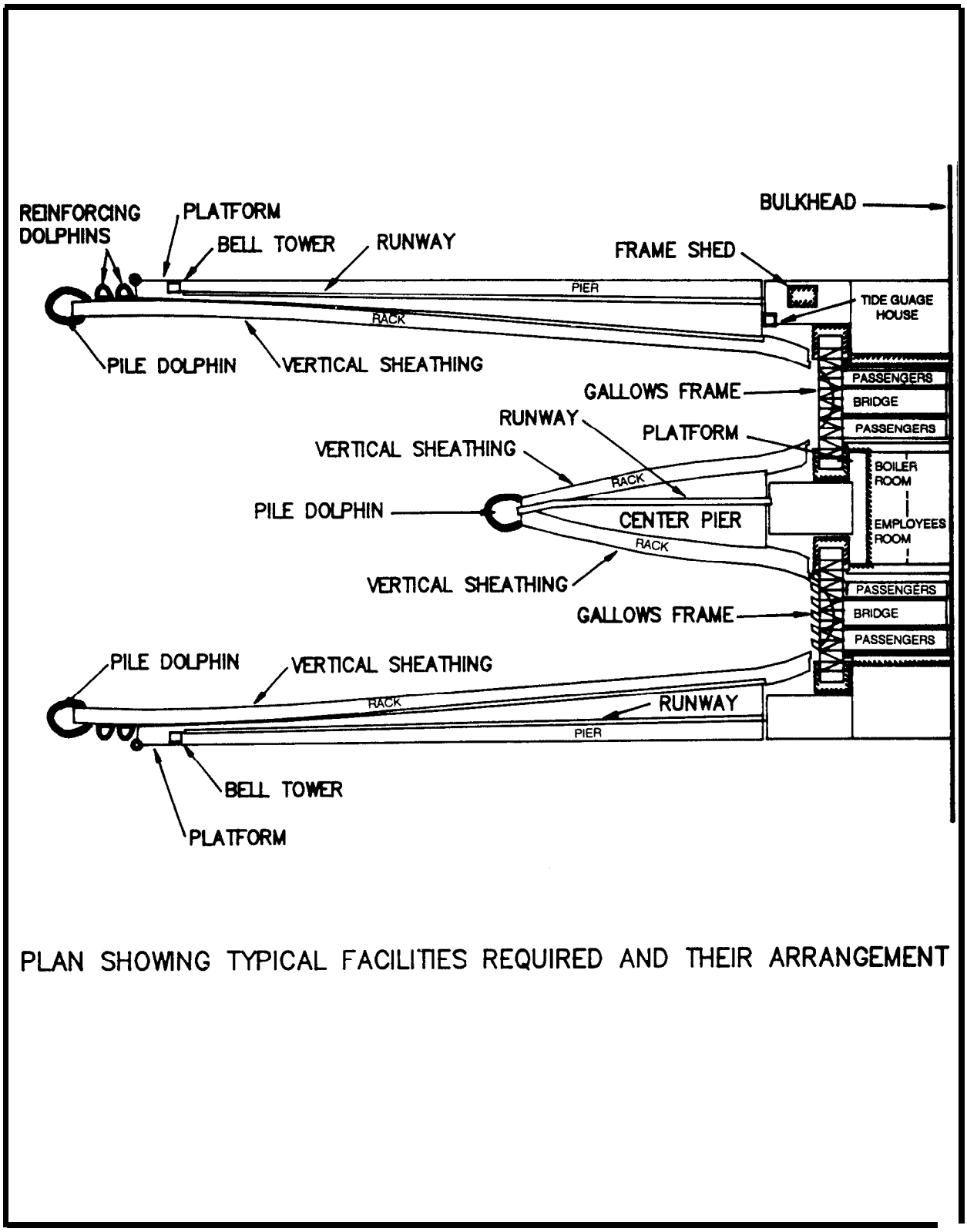

PLAN SHOWING TYPICAL FACILITIES REQUIRED AND THEIR ARRANGEMENT

Figure 32
Ferry Terminal

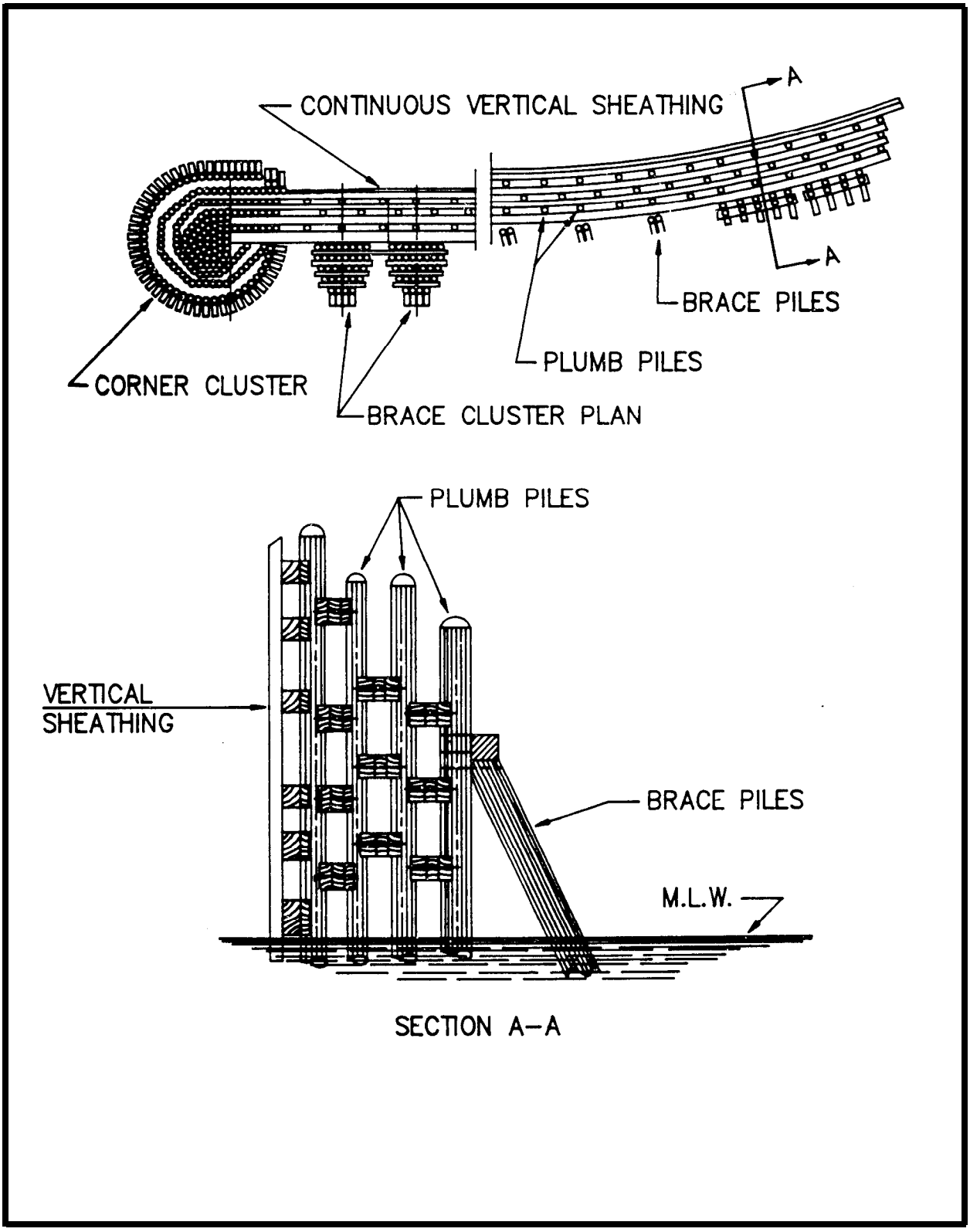

Figure 33
Fender Rack

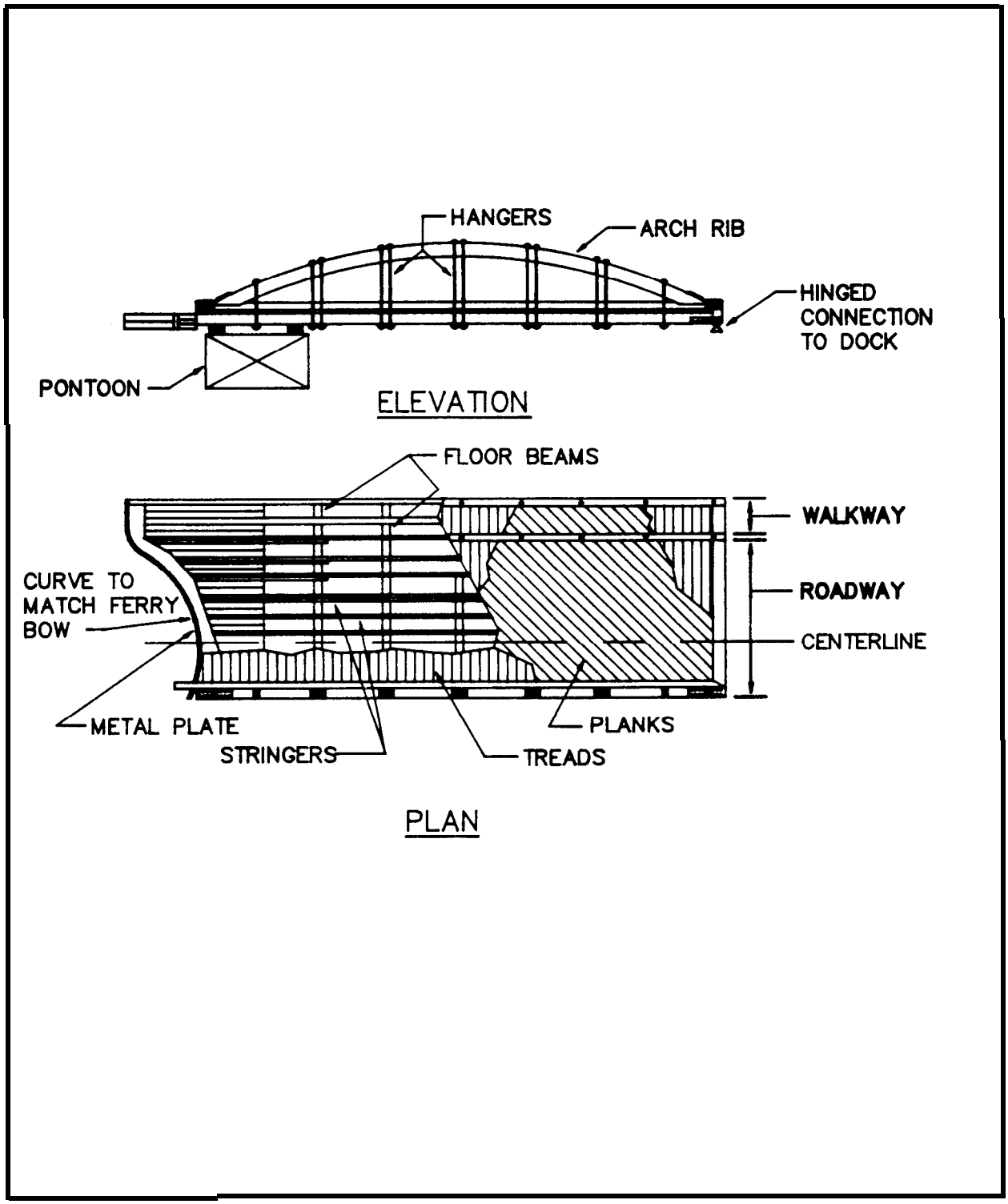

Figure 34
Ferry Transfer Bridge

BIBLIOGRAPHY

Definitive Designs for Naval Shore Facilities, NAVFAC P-272, Naval Facilities Engineering Command, Alexandria, VA 22332-2300.

Design and Construction of Ports and Marine Structures, by Quinn, A.D., Second Edition, 1972, McGraw-Hill Book Company.

Marina Operations and Service, 1961, National Association of Engine and Boat Manufacturers, Inc., Greenwich, Connecticut.

Marinas: Recommendations for Design, Construction and Maintenance, by Chaney, C.A., 1961, National Association of Engine and Boat Manufacturers, Inc., Greenwich, Connecticut.

Port Engineering, by Brunn, P., 1976, Gulf Publishing Co., Houston, Texas.

Ports' 77, Volumes I and II, 4th Annual Symposium of the Waterway, Port, Coastal, and Ocean Division of ASCE, 1977, 345 East 47th Street, New York, NY 10017.

Reinforced Plastic Landing Float and Brow, Naval Civil Engineering Laboratory Technical Report NCEL R605, available at The National Technical Information Service, Springfield, VA 22151.

Report on Small Craft Harbors, ASCE-Manuals and Reports on Engineering Practice- No. 50, 1969, 345 East 47th Street, New York, NY 10017.

Seismic Design of Piers, Volumes I, II, and III, 1976, TUDOR/PMB Consulting Engineering, August 1976, Naval Facilities Engineering Command, Alexandria, VA 22332-2300.

Small Craft Harbors: Design, Construction, and Operation (SR-2), U.S. Army Coastal Engineering Research Center, December 1974, available at the U.S. Government Printing Office, Washington, DC 20402.

REFERENCES

AWPB Standard MPL for Softwood Lumber, Timber and Plywood Pressure Treated for Marine (Saltwater) Exposure, American Wood Preservers Bureau, P.O. Box 6085, 2772 S. Randolph Street, Arlington, VA 22206.

Construction and Protection of Piers and Wharves, NFPA 87, National Fire Protection Association (NFPA), Inc., Batterymarch Park, Quincy, MA 02269.

Military Specification MIL-P-40619, Plastic Material, Cellular, Polystyrene (For Buoyancy Applications) available at the Naval Publications and Forms Center, 5801 Tabor Avenue, Philadelphia, PA 19120.

NAVFACENGCOM Design Manuals and Military Handbooks. Government agencies and the private sector may obtain standardization documents (specifications/handbooks) from the Commanding Officer, Naval Publications and Forms Center (NPFC), 5801 Tabor Avenue, Philadelphia, PA 19120. Government agencies must order design manuals/P-pubs using the Military Standard Requisitioning and Issue Procedure (MILSTRIP) system from NPFC. The private sector must write to NPFC, Cash Sales, Code 1051, 5801 Tabor Avenue, Philadelphia, PA 19120.

MIL-HDBK-1025/1	Piers and Wharves
MIL-HDBK-1025/2	Dockside Utilities for Ship Service
MIL-HDBK-1025/4	Seawalls, Bulkheads, and Quaywalls
MIL-HDBK-1025/6	General Criteria for Waterfront Construction
DM-26.1	Harbors
DM-26.2	Coastal Protection
DM-26.6	Mooring Design Physical and Empirical Data

Shore Protection Manual, Volumes I and II, U.S. Army Coastal Engineering Research Center, 1984, available at the U.S. Government Printing Office, Washington, DC 20402.

Tide Prediction Tables, National Oceanic and Atmospheric Administration, National Ocean Service Distribution Branch, 6501 Lafayette Ave., Riverdale, MD 20737-1199, (301) 436-6990.

GLOSSARY

Accretion. May be either natural or artificial. Natural accretion is the buildup of land, solely by the action of the forces of nature, on a beach by deposition of waterborne or airborne material. Artificial accretion is a similar buildup of land such as that formed by a breakwater, jetty, or groin. Also Aggradation.

Anchor Pile. A pile or column that is an integral part of waterfront structure, whose primary function is to keep the structure firmly in place, having been driven into earth for this purpose.

Ancillary Facilities. Installation or services provided at a harbor site that complement the harbor's operations, but are not essential to harbor functioning per se.

Apron. Clear area around perimeter of a dock for access, parking, storage, and working space.

Armor. An outer layer of large stone or concrete armor units whose function is to ensure the integrity of an embankment, jetty, or breakwater for protection against wave action or currents.

Attenuate. To lessen the amplitude (magnitude of the displacement of a wave from a mean value) of waves or surge.

Auxiliary Power. Means of propelling a craft that is not the primarily designed means, e.g., an engine-driven propeller on a sailboat.

Bank. The rising ground bordering a river, lake, or sea; of a river or channel, designated as right or left as it would appear facing downstream.

Basin. Boat. A naturally or artificially enclosed or nearly enclosed harbor area for small craft.

Bathymetry. The measurement of depths of water in seas, lakes, or oceans; also information derived for such measurements. Also Hydrography or Soundings.

Beach. The zone of unconsolidated material that extends landward from the low water line to the point where there is marked change in material or physiographic form, or to the line of permanent vegetation. The seaward limit of a beach, unless otherwise specified, is the MWL.

Beach Erosion. The carrying away of beach materials by wave action, tidal currents, littoral currents, or wind.

Bearing Boards. The wooden members that transmit the deck loads to the floats in some floating-pier systems.

Bedding Layers. The first and the lowest layer of gravel or stone that acts as a bearing layer for larger stones or armor units placed upon it. It also functions as a filter layer for the material beneath the structure.

Berm. A nearly horizontal part of the beach or backshore formed by the deposit of material by wave action. Some beaches have no berm; others have one or more.

Berth. Area where a boat may be secured to a fixed or floating structure and left unattended.

Berthing Area. Area of a harbor set aside for berthing boats (vessels) at docks and open anchorages.

Boat. Any type of surface craft that may be berthed in a small-craft harbor.

Breakwater. A structure protecting a shore area, harbor, anchorage, or basin from waves.

Brow. A type of bridge providing access to a berthed boat or vessel for embarking and disembarking personnel.

Bulkhead. A structure designed to retain or prevent sliding of earth and consisting of a vertical wall, sometimes supplemented by an anchor system. A secondary purpose is to protect the upland against damage from wave action.

Bulkhead Line. A line which establishes limits outside of which continuous solid-fill construction is not permitted.

Buoy. A float, especially a floating object moored to the bottom to mark a channel, anchor, shoal, rock, etc.

Cantilever. A projecting beam, pile, or structural member that resists or is capable of resisting a transverse load applied to the part projecting beyond its last point of support.

Cap. The finished structural member topping off a wall or bulkhead, providing strength, protection, and continuity to the wall or bulkhead.

Cleat. A wooden or metal mooring fitting having two diverging horizontal arms to which mooring lines from boats are attached.

Cofferdam. A temporary wall which serves to exclude water from a site normally under water so as to facilitate foundation installation or similar work.

Current. A flow of water.

Davit. A device for raising, storing, and lowering a boat.

Diaphragm Breakwater. A comparatively thin, impervious wall, membrane, or structure designed to resist wave penetration, usually a secondary defense structure.

Dock. A fixed or floating decked structure against which a boat may be berthed either temporarily or indefinitely.

Dolphin. A cluster of batter pilings joined at the top, and placed near piers and wharves, or alongshore, to guide vessels into their moorings; to fend boats away from structures, shoals, or the shore; and for anchorage of floating piers.

Down drift. The direction of predominant movement of littoral materials.

Draft. Depth of craft hull below the waterline.

Eddy Current. A circular movement of water formed on the side of a main current. Eddies may be formed at points where the main stream passes projecting obstructions or where two adjacent currents flow counter to each other.

Estuary. (1) The part of a river that is affected by tides.

(2) The region near a river mouth in which the freshwater of the river mixes with the saltwater of the sea.

Fairway. Parts of a waterway that are open and unobstructed for navigation.

Fender. A protective bumper or framed system placed against the edge of a dock, designed to prevent damage caused by impact of berthing or berthed boats.

Filter. The underlayer of small rock or gravel or sand that permits proper seepage and dissipation or distribution of water beneath or behind a structure wall or riprap slope without allowing the earth or there retained material to escape.

Finger Pier. A smaller pier structure attached (usually perpendicular) to the head walk of a multislip pier; provided to facilitate access to the berthed craft.

Freeboard. The distance from the waterline to main deck or gunwale.

Gangway. A pedestrian or handcart bridge affording access from shore or shore- connected fixed pier to a floating structure (sometimes called brow).

Groin. A shore protection structure built, usually perpendicular to the shoreline, to trap littoral drift or retard erosion of the shore.

Guide Piles. Piles in a floating dock system that resist the horizontal displacement of the system but allow and guide its vertical movement with changes in the level of the water surface.

Gunwale. The upper edge of the side of a ship or a boat.

Harbor. A sheltered area of the sea or ocean, easily accessible to maritime routes in which vessels may seek refuge, transfer cargo, and undergo repair and refueling.

Head walk. The main walkway on a multislip pier; supports utility lines, lighting system, firefighting equipment, and locker boxes.

Hurricane. Intense tropical cyclone in which winds spiral inward toward a low pressure core with maximum surface wind velocities that equal or exceed 80 mph (70 knots) for several minutes or longer at some points.

Jetty. On open seacoasts, a structure extending into a body of water, and designed to prevent shoaling of a channel by littoral processes, and to direct and confine the stream or tidal flow. Jetties are built at the mouth of a river or tidal inlet to help maintain and stabilize a channel.

Keel. The principal bottom structural element of a craft extending along the centerline for the full length of the craft.

Lee. (1) The part or side sheltered or turned away from wind or waves,

(2) The quarter or region toward which the wind blows (chiefly nautical).

Leeward. The direction toward which the wind is blowing; the direction toward which waves are traveling.

Littoral Drift. The sedimentary material moved in the littoral zone under the action of waves and currents.

Littoral Transport. The movement of littoral drift in the littoral zone by waves and currents. It includes movement parallel (long-shore transport) and perpendicular (on-shore transport) to the shore.

Operational Launching. Boat launching on a routine in-and-out basis as distinguished from initial or seasonal launching.

Overtopping. Flow of water over the top of a structure, such as a breakwater, as a result of wave runup or surge action.

Pier. A dock that is built from the shore out into the harbor and used for berthing and mooring craft (a structure, usually, of open construction).

Profile. Beach. The intersection of the ground surface with a vertical plane; may extend from the top of the dune line to the seaward limit of sand movement.

Pump out Station. A facility for removal of sanitary wastes from a boat's holding tank or head.

Revetment. A facing of stone, concrete, or other material built to protect a scarp, embankment, or shore structure against erosion by wave action or currents.

Riprap. A layer, facing, or protective mound of stones randomly placed to prevent erosion, scour, or sloughing of structure or embankment; also the stone so used.

Riser. A vertical pipe, post, or support extending above deck level to support utility outlets and other facilities.

Rub Strake. A longitudinal rib or protective strip running along the hull of a craft to function as a bumper.
Rubble Mound. A mound of random-shaped and randomly-placed stones protected with a cover layer of selected stones or specially shaped concrete armor units.

Runup. The rush of water up a structure or beach on the breaking of a wave. The magnitude of runup is the vertical height above still-water level that the rush of water reaches.

Scend. The sinkage of a craft in the trough of a wave.

Screw. A propeller on any type of craft.

Sheet pile. A pile with a generally flat cross-section to be driven into the ground or seabed and meshed or interlocked with like members to form a diaphragm, wall, or bulkhead.

Shoreline. The intersection of a specified plane of water with the shore or beach.

Shoal. Become shallow gradually (v.). A detached elevation of the sea bottom comprising any material except rock or coral, and which may endanger surface navigation (n.).

Slip. A space between two piers for craft berthing.

Small Craft. Shallow draft vessels such as work boats, rescue boats, harbor and pilot launches, special service craft, and survey boats.

Squat. The vertical downward displacement of a craft under power with respect to its position in the water when not underway.

Stringer. The relatively long, main horizontal beam that supports the deck of a fixed pier or dock between bearing points. In a floating structure, the continuous beam (usually, along the sides) that joins a series of floating modules.

Surge. Wave motion with a period intermediate between that of a ordinary wind- generated wave and wave caused by tide, say, from 30 seconds to 60 minutes. It is of low height, usually less than 0.3 feet.

Swell. Wind-generated waves that have traveled out of their generating area; characteristically represents a more regular and long period and has flatter crests than waves within their fetch.

Tidal Range. Difference in height between consecutive high and low waters.

Tide. Periodic rise and fall of the water that results from gravitational attraction of the moon and sun, and other astronomical bodies acting upon the floating earth.

Trailing Floating Slips. Floating (usually, multiboat) slips that align themselves with the prevailing river current. They do not require guide piles.

Training Wall. A wall or jetty designed to direct or stabilize current flow.

Transfer Bridge. A short-span bridge between boat and dock for transfer of railroad cars and other vehicles.

Tremie-Poured Concrete. Concrete placed underwater in such a manner that there is no free drop of the concrete through the water. This is accomplished by pouring through a pipe or placing with special bottom-dump bucket.

Uplift. The upward water pressure on the base of a structure.

Waterline. The place where land and sea meet. This plane shifts with tidal change or other fluctuations in the water level.

Wave Attenuation. Reduction of wave height or amplitude for any reason as the wave is propagated from one area to another.

Wave Breaker. A device that absorbs a large amount of wave energy with respect to the amount it reflects or transmits.

Wave Energy. The theoretical capacity of a wave to do work.

Wharf. A dock oriented approximately parallel to shore and used for berthing or mooring craft.

CUSTODIAN
NAVY - YD

PREPARING ACTIVITY
NAVY - YD

PROJECT NO.
FACR-0258

*U.S. GOVERNMENT PRINTING OFFICE: 1989 - 604-033/11262

INSTRUCTIONS: In a continuing effort to make our standardization documents better, the DoD provides this form for use in submitting comments and suggestions for improvementa. All users of military standardization documents are invited to provide suggestions. This form may be detached, folded along the lines indicated, taped along the loose edge (DO NOT STAPLE), and mailed. In block 5, be as specific as possible about particular problem areas such as wording which required interpretation, was too rigid, restrictive, loose, ambiguous, or was incompatible, and give proposed wording changes which would alleviate the problems. Enter in block 6 any remarks not related to a specific paragraph of the document. If block 7 is filled out, an acknowledgement will be mailed to you within 30 days to let you know that your comments were received and are being considered.

NOTE: This form may not be used to request copies of documents, nor to request waivers, deviations, or clarification of specification requirements on current contracts. Comments submitted on this form do not constitute or imply authorization to waive any portion of the referenced document(s) or to amend contractual requirements.

(Fold along this line)

(Fold along this line)

DEPARTMENT OF THE NAVY

NO POSTAGE NECESSARY IF MAILED IN THE UNITED STATES

OFFICIAL BUSINESS
PENALTY FOR PRIVATE USE $300

BUSINESS REPLY MAIL
FIRST CLASS PERMIT NO. 12503 WASHINGTON D. C.

POSTAGE WILL BE PAID BY THE DEPARTMENT OF THE NAVY

Commander Officer
Naval Construction Bn Center
(Code 156)
Port Hueneme, CA 93043

(TO DETACH THIS FORM, CUT ALONG THIS LINE)

STANDARDIZATION DOCUMENT IMPROVEMENT PROPOSAL

(See Instructions – Reverse Side)

1. DOCUMENT NUMBER	2. DOCUMENT TITLE
MIL-HDBK-1025/5	FERRY TERMINALS AND SMALL CRAFT BERTHING FACILITIES

3a. NAME OF SUBMITTING ORGANIZATION

b. ADDRESS *(Street, City, State, ZIP Code)*

4. TYPE OF ORGANIZATION *(Mark one)*

- ☐ VENDOR
- ☐ USER
- ☐ MANUFACTURER
- ☐ OTHER *(Specify)*: _____
- ☐ EFD/PWO
- ☐ AE
- ☐ CONTRACTOR
- ☐ OICC/ROICC

5. PROBLEM AREAS

a. Paragraph Number and Wording:

b. Recommended Wording:

c. Reason/Rationale for Recommendation:

6. REMARKS

7a. NAME OF SUBMITTER *(Last, First, MI)* – Optional

b. WORK TELEPHONE NUMBER *(Include Area Code)* – Optional

c. MAILING ADDRESS *(Street, City, State, ZIP Code)* – Optional

8. DATE OF SUBMISSION *(YYMMDD)*

DD FORM 82 MAR 1426

PREVIOUS EDITION IS OBSOLETE.

NAVFAC Overprint