ARMY TM 5-809-10
NAVY NAVFAC P-355
AIR FORCE AFM 88-3, Chap 13

SEISMIC DESIGN FOR BUILDINGS

DEPARTMENTS OF THE ARMY, THE NAVY, AND THE AIR FORCE
OCTOBER 1992

REPRODUCTION AUTHORIZATION/RESTRICTI0NS

This manual has been prepared by or for the Government and, except to the extent indicated below, is public property and not subject to copyright.

Copyrighted material included in the manual has been used with the knowledge and permission of the proprietors and is acknowledged as such at point of use. Anyone wishing to make further use of any copyrighted material, by itself and apart from this text, should seek necessary permission directly from the proprietors.

Reprints or republications of this manual should include a credit substantially as follows: "Joint Departments of the Army, Navy, Air Force, USA, TM 5-809-10/NAVFAC P-955/AFM 88-3, Chapter 13, Seismic Design for Buildings, 20 October 1992. "

If the reprint or republication includes copyrighted material, the credit should also state: "Anyone wishing to make further use of copyrighted material, by itself and apart from this text, should seek necessary permission directly from the proprietors."

*TM5-809-1O
*NAVFAC P-355
*AFM 88-3, Chap 13

TECHNICAL MANUAL
No. 5-809-10
NAVY MANUAL
NAVFAC P-355
Air FORCE MANUAL
No. 88-3, CHAP 13

HEADQUARTERS
DEPARTMENTS OF THE ARMY
THE NAVY, AND THE AIR FORCE
WASHINGTON, DC, *20 October 1992*

SEISMIC DESIGN FOR BUILDINGS

		Paragraph	Page
CHAPTER	1. GENERAL		
	Purpose	1-1	1-1
	scope	1-2	1-1
	References	1-3	1-1
	Design criteria	1-4	1-1
	Organization of manual	1-5	1-1
	Reparation of project documents	1-6	1-1
CHAPTER	2. INTRODUCTION TO SEISMIC DESIGN		
	Introduction	2-1	2-1
	General	2-2	2-1
	Ground motion	2-3	2-1
	Structural response	2-4	2-1
	Behavior of buildings	2-5	2-2
	Nature of seismic codes	2-6	2-2
	Fundamentals of seismic design	2-7	2-4
	Alternatives to the prescribed provisions	2-8	2-7
	Future expansion	2-9	2-8
	Existing buildings	2-10	2-8
	Major checkpoints	2-11	2-8
CHAPTER	3. DESIGN CRITERIA		
	Introduction	3-1	3-1
	General	3-2	3-1
	Seismic design provisions	3-3	3-1
	Seismic zone map	3-4	3-1
	Seismic zone factor, Z	3-5	3-1
	Types of occupancy	3-6	3-1
	Importance factors	3-7	3-5
	Approved systems	3-8	3-5
	Dynamic analysis	3-9	3-5
	Quality control	3-10	3-5
CHAPTER	4. APPLICATION OF CRITERIA		
	Introduction..	4-1	4-1
	Site conditions	4-2	4-2
	Facility conditions	4-3	4-2
	Selection of method of analysis	4 4	4-2
	Building systems	4-5	4-3
	C-factor and the building period, T	4-6	4-6
	Base shear	4-7	4-11
	Direction of forces	4-8	4-15
	Distribution of forces	4-9	4-15
	Vertical seismic forces	4-10	4-20
	Detailed design requirements	4-11	4-20
	Deformation requirement	4-12	4-21
	Connections between elements	4-13	4-21
	Diaphragms	4-14	4-22
	Elements and components	4-15	4-22
	Nonbuilding structures	4-16	4-22
	Planning	4-17	4-22
	Design	4-18	4-24
CHAPTER	5. DIAPHRAGMS		
	Introduction	5-1	5-1

"This manual supersedes TM 5-809-10/NAVFAC P-355/AFM 88-3, Chap. 13, dated 15 February 1982

		Paragraph	Page
	General	5-2	5-1
	Diaphragm flexibility	5-3	5-3
	Torsion	5-4	5-5
	Flexibility limitations	5-5	5-9
	Design of diaphragms	5-6	5-11
	Concrete diaphragms	5-7	5-12
	Gypsum diaphragms, cast-in-place	5-8	5-14
	Steel deck diaphragms (single-and multiple-sheet decks)	5-9	5-15
	Wood diaphragms	5-1O	5-36
	Horizontal bracing	5-11	5-39
CHAPTER 6.	SHEAR WALLS		
	Introduction	6-1	6-1
	General	6-2	6-1
	Design forces	6-3	6-1
	Wall components	6-4	6-9
	In-plane effects	6-5	6-1
	Out-of-plane effects	6-6	6-5
	Cast-in-place concrete shear walls..	6-7	6-6
	Tilt-up & other precast concrete shear walls	6-8	6-9
	Masonry shear walls	6-9	6-12
	Wood stud shear walls	6-10	6-20
	Steel stud shear walls	6-11	6-20
CHAPTER 7.	BRACED FRAMES		
	Introduction	7-1	7-1
	General	7-2	7 1
	Concentric braced frames (CBF)	7-3	7-1
	Eccentric braced steel frames (EBF)	7-4	7-3
	Knee-braced frames (KBF)	7-5	7-6
CHAPTER 8.	CONCRETE MOMENT RESISTING FRAMES		
	Introduction	8-1	8-1
	General	8-2	8-1
	Classification of concrete seismic moment resisting frames	8-3	8-1
	Type A frames	8-4	8-1
	Type B frames	8-5	8-3
	Type C frames	8-6	8-19
	Type D frames	8-7	8-19
	Nonseismic frames	8-8	8-19
CHAPTER 9.	STEEL MOMENT RESISTING FRAMES		
	Introduction.	9-1	9-1
	General	9-2	9-1
	Steel special moment resisting frames (steel SERF	9-3	9-1
	Steel ordinary moment reseating frames (steel OMRF)	9-4	9-2
CHAPTER 10.	FOUNDATIONS		
	Introduction	10-1	10-1
	General	10-2	10-1
	Design of elements	10-3	10-2
	Foundation capacities	10-4	10-2
CHAPTER 11.	ARCHITECTURAL ELEMENTS		
	Introduction	11-1	11-1
	Definition	11-2	11-1
	Design criteria	11-3	11-1
	Detailed requirements	11-4	11-2
	Alternative designs	11-5	11-7
CHAPTER 12.	MECHANICAL AND ELECTRICAL EQUIPMENT		
	Introduction	12-1	12-1
	General	12-2	12-1
	Rigid and/or rigidly supported equipment in buildings	12-3	12-2
	Nonrigid or flexibly supported equipment in buildings	1 2 4	12-2
	Equipment on the ground	12-5	12-6
	Lighting fixtures in buildings	12-6	12-7
	Piping in buildings	12-7	12-7
	Stacks	12-8	12-13
	Bridge cranes and monorails	12-9	12-13
	Elevators	12-10	12-15
	Typical details for securing equipment	12-11	12-18

	Paragraph	Page
CHAPTER 13. NONBUILDING STRUCTURES		
Introduction	13-1	13-1
General	13-2	13-1
Elevated tanks and other inverted pendulum structures	13-3	13-1
Vertical tanks (on ground)	13-4	13-1
Horizontal tanks (on ground)	13-5	13-7
Retaining walls	13-6	13-7
Buried structures	13-7	13-7
CHAPTER 14. UTILITY SYSTEMS		
Introduction	14-1	14-1
General	14-2	14-1
Earthquake considerations for utility systems	14-3	
General planning considerations	14-4	14-1
Specific planning considerations	14-5	14-2
Design considerations	14-6	14-3
Seismic details	14-7	14-4
APPENDIX A. REFERENCES		A-1
APPENDIX B. SEAOC RECOMMENDATIONS		B-1
APPENDIX C. SEAOC AMENDMENTS TO ACI 318		C-1
APPENDIX D. DESIGN EXAMPLES-BUILDING SYSTEMS		D-1
APPENDIX E. DESIGN EXAMPLES-MECHANICAL AND ELECTRICAL EQUIPMENT		
APPENDIX F. DESIGN EXAMPLES-NONBUILDNG STRUCTURES		

LIST OF FIGURES

Figure	Title	Page
2-1	Schematic showing building distortions.	2-3
2-2	Vertical elements of the lateral force resisting systems.	2-6
3-1	Seismic zone map of the United States.	3-2
4-1	The space frame and the designated seismic moment resisting frame.	4-3
4-2	Dual system-deformations.	4-5
4-3	C vs T.	4-8
4-4	Period calculation by Method B.	4-9
4-5	Sample site spectrum.	4-11
4-6	Sample building design spectrum.	4-12
4-7	Tributary weights at a story.	4-14
4-8	Path of forces.	4-16
4-9	Transfer of forces to ground.	4-17
4-10	Seismic forces	4-18
5-1	Diaphragms.	5-2
5-2	Bracing an industrial building.	5-2
5-3	Diaphragm flexibilities.	5-4
5-4	Flexible diaphragm.	5-5
5-5	Cantilever diaphragm.	5-6
5-6	Building with walls on three sides.	5-7
5-7	Calculated torsion.	5-8
5-8	Accidental torsion amplification factor.	5-8
5-9	Anchorage of cast-in-place concrete slabs.	5-13
5-10	Attachment of superimposed diaphragm slab to precast slab units.	5-14
5-11	Precast concrete diaphragms using precast units.	5-15
5-12	Concrete diaphragms using precast units–details permitted in Seismic Zone 1 only.	5-16
5-13	Comer of monolithic concrete diaphragm.	5-17
5-14	Concrete diaphragms-typical connection details.	5-18
5-15	Poured gypsum diaphragms–typical details.	5-20
5-16	Steel deck diaphragms-typical details of fastenings.	5-23
5-17	Steel deck diaphragms Type A–typical attachments.	5-24
5-18	Steel deck diaphragm Type A–typical details with open-web joists.	5-25
5-19	Steel deck diaphragm Type A–allowable shears and flexibility factors.	5-27
5-20	Steel deck diaphragm Type A–sample calculation.	5-29
5-21	Steel deck diaphragms Type B–typical attachments to frame.	5-34
5-22	Steel deck diaphragms with concrete fill.	5-37
5-23	Wood details.	5-41
6-1	Shear wall deformation.	6-2
6-2	Deformation of shear wall with openings.	6-3
6-3	Relative rigidities of piers and spandrels.	6-4
6-4	Design curves for masonry and concrete shear walls.	6-5
6-5	Out-of-plane effects.	6-7

Figure	Title	Page
6-6	Minimum concrete shear wall reinforcement (two curtains)	6-8
6-7	Minimum concrete shear wall reinforcement (one curtain).	6-9
6-8	Shear wall with special boundary members.	6-10
6-9	Tilt-up and other precast concrete. walls–typical details of attachments	6-12
6-10	Reinforced grouted masonry.	6-14
6-11	Reinforced hollow masonry.	6-15
6-12	Reinforced tilled-cell masonry.	6-16
6-13	Location of bond beams.	6-17
6-14	Typical wall reinforcement-reinforced masonry.	6-18
6-15	Reinforcement around wall openings.	6-19
6-16	Masonry wall details.	6-21
6-17	Plywood-sheated wood stud shear walls.	6-23
6-18	Allowable stresses for plywood-sheathed wood stud walls.	6-24
6-19	Typical wood stud shear walls of various materials other than plywood.	6-25
6-20	Wood stud walls-typical tie-down details.	6-26
6-21	Steel stud shear walls–typical details.	6-27
7-1	Braced frames.	7-2
7-2	Bracing for a tier building.	7-2
7-3	Eccentric braced frame configurations.	7-3
7-4	Deformed-frame geometry.	7-5
7-5	Link beam and intermediate stiffeners.	7-6
8-1	Frame deformations.	8-2
8-2	Type A frame-limitations on dimensions.	8-4
8-3	Type A frame-longitudinal reinforcement.	8-5
8-4	Type A frame-splices in reinforcement.	8-6
8-5	Type A frame-transverse reinforcement.	8-7
8-6	Type A frame-girder web reinforcement.	8-8
8-7	Type A frame-column transverse reinforcement.	8-9
8-8	Type A frame-special transverse reinforcement.	8-10
8-9	Type A frame-girder-column join analysis	8-11
8-10	Type B frame-frame requirements.	8-12
8-11	Type B frame-longitudinal reinforcement.	8-13
8-12	Type B frame-splices in reinforcement.	8-14
8-13	Type B frame-transverse reinforcement.	8-15
8-14	Type B frame-girder web reinforcement.	8-16
8-15	Type B frame-column transverse reinforcement.	8-17
8-16	Type B frame-slab/column framing system.	8-18
9-1	Steel SMRF.	9-2
9-2	Panel zone details.	9-3
11-1	Typical details of isolation of walls.	11-2
11-2	Veneered walls.	11-4
11-3	Design forces for exterior precast elements.	11-5
11-4	Suspended acoustical tile ceiling.	11-6
12-1	Idealized acceleration magnification factor vs period ratio at 2 percent of critical damping.	12-4
12-2	Design MF vs period ratio.	12-5
12-3	Amplification factor, A_p, for nonrigid and flexibly supported equipment	12-6
12-4	Maximum span for rigid pipe pinned-pinned.	12-9
12-5	Maximum span for rigid pipe fixed-pinned.	12-10
12-6	Maximum span for rigid pipe fixed-fixed.	12-11
12-7	Maximum span for flexible pipes in Seismic Zone 4.	12-12
12-8	Acceptable seismic details for sway bracing.	12-14
12-9	Period coefficients for uniform beams.	12-15
12-10	Seismic loading on cantilever stack.	12-16
12-11	Single-guyed stack.	12-16
12-12	Elevator details.	12-17
12-13	Typical seismis restraint of hanging equipment.	12-18
12-14	Typical seismic restraint of floor-mounted equipment.	12-19
13-1	Effective liquid force distribution.	13-2
13-2	Rigid body and sloshing liquid forces.	13-3
13-3	Effective weight and height ratios.	13-4
13-4	Period constant, k_i.	13-5
13-5	Coefficient k_d.	13-6
14-1	Manhole footing.	14-5
14-2	Pipe through wall.	14-6
14-3	Flexible joints.	14-7
14-4	Flexible coupling.	14-8

Figure	Title	Page
14-5	Coupling at tee.	14-9
14-6	Fill-native material interface.	14-10
14-7	Water distribution network.	14-11
D-1	Box system.	D-2
D-2	Concrete ductile moment resisting space frame.	D-48
D-3	Steel ductile moment resisting space frame and steel braced frame.	D-73
D-4	Dual bracing system.	D-126
D-5	Dual bracing system.	D-138
D-6	Wood box system.	D-145
D-7	Special configuration.	D-158
D-8	L-shaped building.	D-168
E-1	Pad-mounted transformer.	E-2
E-2	Cooling tower in building.	E-3
E-3	Unit heater-flexible brace.	E-4
E-4	Unit heater-rigid support.	E-6
E-5	Water heater.	E-8
E-6	Tank on a building.	E-10
E-7	Water riser.	E-12
F-1	Elevated tank (braced frame).	F-1
F-2	Vertical tank (on ground).	F-4
F-3	Horizontal tank (on ground).	F-8
F-4	Pole-mounted transformer.	F - n
F-5	Tower-mounted equipment.	F-12

LIST OF TABLES

Table	Title	Page
3-1	Seismic zone tabulation–United States	3-3
3-2	Seismic zone tabulation-outside United States.	3-7
4-1	C vs T for S_1, S_2, S_3 and S_4.	4-7
4-2	Value of T to be exceeded for C to be less than 2.75 when using Method A.	4-8
4-3	Height to be exceeded for C to be less than 2.75 when using Method A.	4-8
4-4	Force distribution.	4-19
5-1	Flexibility limitation on diaphragms.	5-9
5-2	Flexibility and allowable shears.	5-10
5-3	Shear values of poured gypsum diaphragms.	5-19
5-4	Shear on anchor bolts and dowels–reinforced gypsum concrete.	5-19
5-5	Maximum shear on trussed tees.	5-19
5-6	Horizontal diaphragm shear.	5-40
6-1	Minimum wall reinforcement.	6-19
8-1	Concrete moment resisting frame systems.	8-3
12-1	Amplification factor, A_p, for nonrigid or flexibly supported equipment.	12-5
12-2	Multiplication factors for Figure 12-7 for Seismic Zones 1, 2, and 3 or for cases where $ZI_pA_pC_p$ is not equal to 1.5.	12-13
13-1	Effective weight ratio.	13-4
13-2	Effective height ratio.	13-5
13-3	Period constant, k_t,	13-6
13-4	Coefficient k_d.	13-6

CHAPTER 1

GENERAL

1-1. Purpose. This manual provides criteria and guidance for the design of structures to resist the effects of earthquakes.

1-2. Scope. This manual is a general approach for the seismic design of buildings, including architectural components, mechanical and electrical equipment supports, some structures other than buildings, and utility systems. Primary emphasis is given to the equivalent static force design procedure.

1-3. References. Appendix A contains a list of references used in this manual.

1-4. Design criteria. Preparation of seismic designs will be in accordance with the criteria and design standards herein.

a. The seismic design and detail requirements in this manual are based on the Structural Engineers Association of California (SEAOC) *Recommended Lateral Force Requirements and Commentary*. References to SEAOC are made throughout this manual and are discussed to expand or explain the application of SEAOC to the design of military facilities. It is necessary to have the requirements portion of that document, chapters 1 through 6 to use in conjunction with this manual. Appendix B contains information concerning the SEAOC manual.

h Criteria and design standards in the agency manuals for ordinary or nonseismic design are applicable to seismic design except where criteria in this manual are more stringent. Details of construction shown in this manual represent those acceptable for conforming systems. Site adaptation of standard drawings will include design revisions for the seismic area as required. In overseas construction, where local materials of grades other than those stated herein are used, the working stresses, grades, and other requirements of this manual will be modified as applicable.

1-5. Organization of manual. The general provisions for seismic design are covered in this manual by chapters 2, 3, and 4: chapter 2 provides an introduction to the basic concepts of seismic design; chapter 3 contains the seismic design criteria; and chapter 4 provides a guide to the application of the seismic design criteria. Chapters 5 through 10 are concerned with seismic design in relation to structural materials, elements, and components, including foundations. Chapters 11 and 12 cover seismic provisions for nonstructural components such as architectural, mechanical, and electrical elements. Chapter 13 covers structures other than buildings, and chapter 14 gives some guidelines for designing for the effects of earthquakes on utility systems. The appendices provide examples of design calculations.

1-6. Preparation of project documents. Design analysis, drawings, specifications, and cost estimates will conform to agency standards and the following additional requirements:

a. *Design analysis. The* design analysis, to be furnished with the final plans, will include:

(1) *Basis of design.* The first part of the analysis, called the basis of design, will contain the following specific information:

(a) A statement of the seismic zone for which the structure will be designed.

(b) A description of the structural system selected for resisting lateral forces and a discussion of the reasons for its selection. If irregular features are involved, the application of configuration requirements will be established.

(c) A statement regarding compliance with this manual and the selected values of the design parameters R_w, C, S, T, I, and Z as defined in subsequent chapters.

(d) A statement defining the assignment of responsibilities for seismic design of structural and nonstructural elements and components of the building by architectural, mechanical, electrical, and other consultants.

(e) A description of any possible assumed future expansion for which provisions are made.

(2) *Computations.* The design analysis will include seismic design computations for the stresses in the lateral force resisting elements and their connections, and for the resulting lateral deflections and interstory drifts.

(3) *Computer analyses. When* computers are used to perform seismic design calculations, the analysis will include:

(a) Computer applications. Copies of computer data, accompanied by diagrams that identify supports, joints, and members according to the notations used in the data listings, will form integral parts of the design calculations in lieu of manual computations otherwise required. These listings will be augmented with intermediate results where applicable, so that sufficient informa-

tion is available to permit manual checks of final results.

(b) Information. The names and descriptions of the computer programs will be provided. Other information will be in sufficient detail so the method of solution and limitations may be identified. Designers are encouraged to use well-documented, widely accepted structural analysis programs that are continuously maintained and enhanced by an experienced computer service organization.

(c) *Confidential or proprietary information.* The use of confidential or proprietary information is not desirable and should be avoided. If proprietary or confidential computer programs are used, it is the responsibility of the designer to provide suitable documentation to the government. To verify the accuracy of the proprietary or confidential program, sample problems should be solved and the results compared with results from a widely accepted structural analysis program.

b. Drawings.

(1) Preliminary drawings will contain a statement that seismic design will be incorporated. The basis of design submitted with these drawings will give full information concerning the seismic loads that will be used and the assumptions that will be made in carrying out the seismic design.

(2) Construction drawings will include:

(a) A statement of the seismic zone and the R_w, C, S, T, I, and Z values.

(b) Wall elevations for all concrete and masonry shear walls showing openings and special reinforcing.

c. Specifications. Specifications will use applicable guide specifications or supplements. Specifications will include a QA plan identifying all elements of the lateral force resisting system requiring special inspection and testing.

d. Cost estimates. The special provisions required for seismic design generally result in an increase in construction costs of 1 percent to 5 percent. The amount of this increased cost depends on the overall concept and configuration of the building system and the geographical location of the building site. In some cases, a small increase in the number of reinforcing bars, anchors, or stiffener plates or a small increase in the amount of weld material may be all that is required to meet the seismic design provisions. In other cases, however, where the basic concept or configuration of the building does not provide an efficient system of lateral force resistance, the additional costs to provide seismic force resistance can be appreciable. In geographical locations where the local construction industry is not experienced with the special details of earthquake resistant construction, the differential costs for seismic design will generally be greater than they will in areas such as California, where this type of construction is the norm. For example, the premium for seismic construction will be higher for *reinforced* masonry, special *moment resisting* reinforced concrete frames, and *special moment resisting* steel frames in areas where these types of construction are not common.

e. Items to be designed by the contractor. For these items, the drawings and specifications will specify requirements for the following:

(1) Qualifications of the contractor's engineer.

(2) Criteria for the design: governing documents, required loads, limiting deflections, performance objectives.

(3) Mechanism for review and basis for acceptance of the proposed design.

CHAPTER 2

INTRODUCTION TO SEISMIC DESIGN

2-1. Introduction. This chapter provides an introduction to the basic concepts of designing buildings to resist inertia forces and related effects caused by earthquakes.

2-2. General. An earthquake causes vibratory ground motions at the base of a structure, and the structure actively responds to these motions. For the structure responding to a moving base there is an equivalent system: the base is fixed and the structure is acted upon by forces (called inertia forces) that cause the same distortions that occur in the moving-base system. In design it is customary to visualize the structure as a fixed-base system acted upon by inertia forces. Seismic design involves two distinct steps—determining (or estimating) the forces that will act on the structure, and designing the structure so as to both resist these forces and keep deflections within prescribed limits.

a. Determination of forces. There are two general approaches to determining seismic forces—an equivalent static force procedure, and a dynamic lateral force procedure. This manual illustrates the equivalent static force procedure.

b. Design of the structure. The structural designer must visualize the response of the structure to earthquake ground motions and provide a design that will accommodate the distortions and stresses that will occur in the building. In certain cases, some elements cannot accommodate these stresses and distortions. Examples may include rigid stairs, rigid partitions, and irregular wings of buildings. These elements should be isolated if necessary in order to reduce damage to themselves or to reduce the detrimental effects they have on the lateral force resisting system. The development of an adequate earthquake resistant design for a structure entails the following five procedures

(1) Selection of a workable overall structural concept.

(2) Establishment of member sizes.

(3) Structural analysis of the members to verify that stress and displacement requirements are satisfied.

(4) Adjustment of member sizes based on allowable stresses and displacements. If significant member size changes are made, it will be necessary to reanalyze the structural system to verify stress and displacement requirements.

(5) Provision of structural and nonstructural details so that the building can perform as intended.

2-3. Ground motion. The response of a given building depends on the characteristics of the ground motion; therefore it would be highly desirable to have a quantitative description of the ground motion that might occur at the site of the building during a major earthquake. Unfortunately, there is no one description that fits all the ground motions that might occur at any particular site. The characteristics of the ground motion are dependent on the magnitude of the earthquake (i.e., the energy released), the distance from the source of the earthquake (depth as well as horizontal distance), the distance from the surface faulting (this may or may not be the same as the horizontal distance from the source), the nature of the geological formations between the source of the earthquake and the building, and the nature of the soil in the vicinity of the building site (e.g., hard rock or alluvium). Although fully accurate prediction of ground motion is not possible, the art of ground motion prediction has progressed in recent years to the point that design criteria have been established in areas where historical earthquake records and geological information are available. For more information on ground motion, refer to TM 5–809-10–1/NAVFAC P–355.l/AFM 88-3, Chap 13, Sec A.

2-4. Structural response. If the base of a structure is suddenly moved, as in the case of seismic ground motion, the upper part of the structure will not respond instantaneously but will lag because of inertial resistance. The amount of lag depends primarily on the flexibility of the structure. This concept is illustrated in figure 2–1 which shows the motion in one plane. The stresses and distortions in the building will be the same as if the base of the structure were to remain stationary while time-varying horizontal forces were applied to the upper part of the building. These forces are equal to the product of the mass of the structure and the acceleration, or F = ma. (Mass is equal to weight divided by the acceleration of gravity.) Because the ground motion at a point on the earth's surface is three-dimensional (one vertical and two horizontal components), the structures affected will deform in a three-dimensional manner. Generally, however, the inertia forces generated by the horizontal components of ground mo-

tion require the greater consideration for seismic design; adequate resistance to the vertical components is usually provided by the member capacities required for gravity load design. For ordinary structures within the scope of this manual, the inertia forces are represented by equivalent static forces. However, buildings can be idealized by the use of simplified models that represent the dynamic characteristics of the structure. For special structures the idealized models are subjected to time history, response spectrum, or other dynamic analyses, and the results are used to determine the forces in the building. For more information on dynamic analysis procedures, refer to TM 5-809-1O-UNAVFAC P–355.1/AFM 88–3, Chap 13, Sec A.

2-5. Behavior of buildings. Buildings are composed of horizontal and vertical structural elements that resist lateral forces. The horizontal elements, diaphragms, and horizontal bracing are used to distribute the lateral forces to vertical elements. The vertical elements that are used to transfer lateral forces to the ground are shear walls, braced frames, and moment resisting frames.

a. *Demands of earthquake motion.* The loads or forces that a structure sustains during an earthquake result directly from the distortions induced in the structure by the motion of the ground on which it rests. Ground motion is characterized by displacements, velocities, and accelerations that are erractic in direction, magnitude, duration, and sequence. Earthquake loads are inertia forces related to the mass, stiffness, and energy-absorbing (e.g., damping and ductility) characteristics of the structure. During the life of a structure located in a seismically active zone, it is generally expected that the structure will be subjected to many small earthquakes, some moderate earthquakes, one or more large earthquakes, and possibly a very severe earthquake. In general, it is uneconomical or impractical to design buildings to resist the forces resulting from the very severe or maximum credible earthquake within the elastic range of stress; instead, the building is designed to resist lower levels of force, using ductile systems. When the earthquake motion is large to severe, the structure is expected to yield in some of its elements. The energy-absorbing capacity (ductility) of the yielding structure will limit the degree of life-threatening damage: buildings that are properly designed and detailed can survive earthquake forces substantially greater than the design forces associated with allowable stresses in the elastic range. Seismic design concepts must consider building proportions and details for their ductility and for their reserve energy-absorbing capacity for surviving the inelastic deformations that would result from the maximum expected earthquake. Special attention must be given to the connections that hold together the elements of the lateral force resisting system.

b. *Response of buildings.* For dynamic analysis of the response of a building to ground motion, the structural properties of the building are represented by a mathematical model that consists of an assembly of masses interconnected by springs and dampers. At each floor, tributary masses are lumped into a single mass. The force-deformation characteristics of the lateral force resisting walls or frames between floor levels are transformed into equivalent story stiffnesses. An appropriate degree of damping is assumed. Because of the complexity of the calculations for dynamic analysis methods, the use of a computer program is generally necessary; these complex methods of analysis are generally used for essential structures. Most buildings, however, are designed by the equivalent static force procedure prescribed in this manual. For buildings that require a dynamic analysis approach, refer to TM 5–809–10–l/NAVFAC P-355.1/AFM 88–3, Chap 13, Sec A.

c. *Response of elements attached to the building.* Elements attached to the floors of the building (e.g., mechanical equipment, ornamentation, piping, nonstructural partitions) respond to floor motion in much the same manner that the building responds to ground motion. However, the floor motion may vary substantially from the ground motion. The high-frequency components of the ground motion tend to be filtered out at the higher levels in the building, while the components of ground motion that correspond to the natural periods of vibration of the building tend to be magnified. If the elements are rigid and are rigidly attached to the structure, the forces on the elements will be in the same proportion to the mass as the forces on the structure, or F = ma (i.e., the accelerations of the elements will be about the same as the acceleration of the floor on which they are supported). However, elements that are flexible and have periods of vibration close to any of the predominant modes of the building vibration will experience forces substantially greater than the forces on the structure (i.e., accelerations of elements will be greater than floor accelerations).

2-6. Nature of seismic codes. Codes and criteria are established from limited testing, design experience, and the observed performance of buildings in past earthquakes. A code represents the consensus of a committe: the generalized statements arrived at by compromise to cover uncertainties and limi-

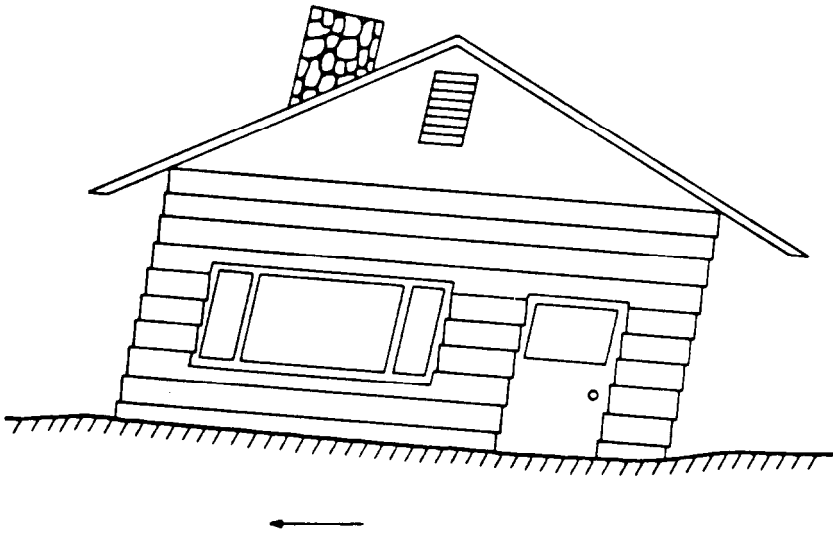

(a) *Schematic of Low-Rise Building Instantaneous Distortion During Ground Motion*

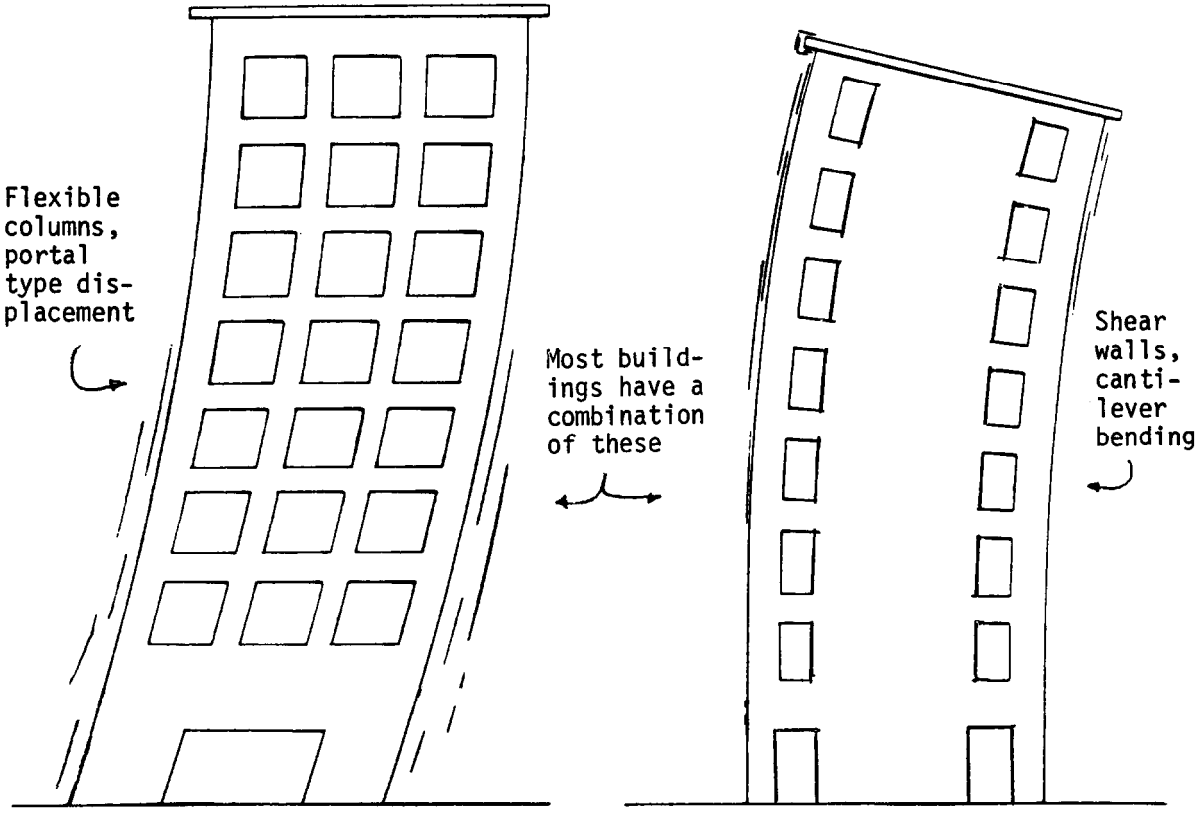

(b) *Schematic Showing Shear-Type Distortion*

(c) *Schematic Showing Bending-Type Distortion*

Figure 2–1. Schematic showing building distortion.

tations. Codes must of necessity be short and relatively simple; therefore they do not account for all aspects of the complex phenomena of the response of actual structures to actual earthquakes. Seismic codes provide a set of design forces to represent the dynamic response of a structure subject to a complex earthquake ground motion.

a. Purpose. The basic purpose of a building code is to provide for public safety. The seismic provisions of this manual (chap 3) are based on the requirements portion of the 1990 edition of the *Recommended Lateral Force Requirements and Commentary* of the Structural Engineers Association of California. Excerpts from the commentary portion of that publication are reprinted below:[1]

(1) The primary function of these Recommendations is to provide minimum standards for use in building design regulation to maintain public safety in the extreme earthquakes which may occur at the building's site. These Recommendations primarily are intended to safeguard against major failures and loss of life, not to limit damage, maintain functions, or provide for easy repair. It is emphasized that the purpose of these recommended design procedures is to provide buildings that are *expected* to meet this life safety objective.

(2) The specified design forces given herein are based on the assumption that a significant amount of inelastic behavior may take place in the structure due to a major level of earthquake ground motion. As a result, these design forces and the related elastic deformations are much lower than those that would occur if the structure were to remain elastic. For a given structural system, the design provisions are intended to provide for the necessary inelastic behavior, and representations of the element force levels and deformations in the fully responding inelastic structure are given as appropriate multiples of the values found by the linear elastic analysis of the structure under the specified design forces.

(3) Structures designed in conformance with these Recommendations should, in general, be able to:

(a) Resist a minor level of earthquake ground motion without damage;

(b) Resist a moderate level of earthquake ground motion without structural damage, but possibly experience some nonstructural damage;

(c) Resist a major level of earthquake ground motion having an intensity equal to the strongest either experienced or forecast for the building site, without collapse, but possibly with some structural as well as nonstructural damage.

(4) It is expected that structural damage, even in a major earthquake, will be limited to a repairable level for structures that meet these provisions. The level of damage depends upon a number of factors, including the configuration, type of lateral force resisting system, materials selected for the structure, and care taken in construction.

(5) Conformance to these Recommendations does not constitute any kind of guarantee or assurance that significant structural damage will not occur in the event of a maximum level of earthquake ground motion. In order to fulfill the life safety objective of these Recommendations, there are requirements that provide for structural stability in the event of extreme structural deformations; provisions protect the vertical load carrying system from fracture or buckling at these extreme states. While damage to the primary structural system may be either negligible or significant, repairable or virtually irreparable, it is reasonable to expect that a well-planned and constructed structure will not collapse in a major earthquake. The protection of life is reasonably provided, but not with complete assurance.

(6) Conformance to these Recommendations will not limit or prevent damage due to earth movements including earth slides such as those that occurred in Anchorage, Alaska, or due to soil liquefaction such as occurred in Nigata, Japan. These Recommendations are intended to provide the minimum required resistance to earthquake ground shaking.

b. Design provisions. The seismic design provisions furnish a method for establishing the forces, describe acceptable structural systems, set limits on deformation, and specify the allowable stresses and/or strengths of the materials. The seismic design provisions are minimum requirements, and emphasis must be placed on structural concepts and detailing techniques as well as on stress calculations. The provisions are not all-inclusive: they work best for regular, symmetrical buildings. Unusual or large buildings require alternatives to the static provisions that rely on dynamic analyses and/or greater application of engineering judgment and experience in seismic design. Guidelines are given in this manual for determining when alternative procedures are required. TM 5–809–10–1/NAVFAC P-355.1/AFM 88–3, Chap 13, Sec A provides alternative procedures.

2-7. Fundamentals of seismic design. The type of structural system used will determine the magnitude of the design lateral forces. The decision as

[1] Copyright 1990, Structural Engineers Association of California.

to the type of structural system to be used will be based on the merits and relative costs for the individual building being designed. There are innovative systems available for particular structural configurations and conditions, such as eccentric braced frames, seismic isolation, friction devices, and other response control systems. These systems are described below.

a. Lateral force resisting systems. Over a dozen approved lateral force resisting systems are described in chapter 3. All of the systems rely basically on moment resisting frames within a complete, three-dimensional space frame, a coordinated system of shear walls or braced frames with horizontal diaphragms, or a combination of these two systems. The vertical elements of the lateral force resisting systems are illustrated in figure 2-2.

(1) In buildings where a moment resisting frame resists the earthquake forces, the columns and beams act in bending (a of fig 2–2). During a large earthquake, story-to-story deformation (story drift) may be a matter of inches without causing failure of columns or beams. However, the drift may be sufficient to damage elements that are rigidly tied to the structural system, such as brittle partitions, stairways, plumbing, exterior walls, and other elements that extend between floors. For this reason buildings can have substantial interior and exterior nonstructural damage, possibly approaching 50 percent of the total building value, and still be considered structurally safe. Moment frames are desirable architecturally because they are relatively unobtrusive compared with shear walls or braced frames, but they may be a poor economic risk unless special damage control measures are taken.

(2) Buildings with shear walls (*b* of fig 2-2) are usually rigid compared with buildings with moment resisting frames. With low design stress limits in shear walls, deformation due to shear forces (for low buildings) is negligible. Shear wall construction is an excellent method of bracing buildings to limit damage to nonstructural components, but architectural considerations may limit its applicability. Shear walls are usually of reinforced unit masonry or reinforced concrete but may be of wood in wood-frame buildings up to and including three stories. Shear wall design is relatively simple except when the height-to-width ratio of a wall becomes large. Then overturning may be a problem, and if the foundation soil is relatively soft, the entire shear wall may rotate, causing localized damage around the wall. Another difficult case is the shear wall with openings such that it may respond more like a frame than a wall.

(3) Braced frames (*c* of fig 2-2) generally have the stiffness associated with shear walls, but are somewhat less restrictive architecturally. It is usually difficult to find room for doorways within a frame; however, braces may be less obtrusive than solid walls. The concern for overturning, mentioned above for shear walls, applies also to braced frames.

(4) Structural systems may be used in various combinations. There may be different systems in the two directions, or systems may be combined in any one direction, or may be combined vertically.

(5) A building is not merely a summation of parts (walls, columns, trusses, and similar components) but is a completely integrated system or unit that has its own properties with respect to lateral force response. The designer must trace the forces through the structure into the ground and make sure that every connection along the path of stress is adequate to maintain the integrity of the system. It is necessary to visualize the response of the complete structure and to keep in mind that the real forces involved are not static but dynamic, are usually erratically cyclic and repetitive, may be significantly larger than the design forces, and can cause deformations well beyond those determined from the design forces.

b. Configuration. A great deal of a building's resistance to lateral forces is determined by its plan layout. The objective in this regard is symmetry about both axes, not only of the building itself but of its lateral force resisting elements and of the arrangement of wall openings, columns, shear walls, and so on. It is most desirable to consider the effects of lateral forces on the structural system from the start of the layout, since this may save considerable time and money without detracting significantly from the usefulness or appearance of the building. Experience has shown that buildings that are asymmetrical in plan have greater susceptibility to earthquake damage than symmetrical structures. The effect of asymmetry is to induce torsional oscillations of the structure and stress concentrations at re-entrant corners. Asymmetry in plan can be eliminated or improved by separating L-, T-, and U-shaped buildings into distinct units by use of seismic joints at the junctions of the individual wings. It should be noted, however, that this causes two new problems: providing floor joints that are capable of bridging gaps large enough to preclude adjacent structures from pounding each other, and providing wall and roof joints that are capable of keeping out the weather. Asymmetry caused by the eccen-

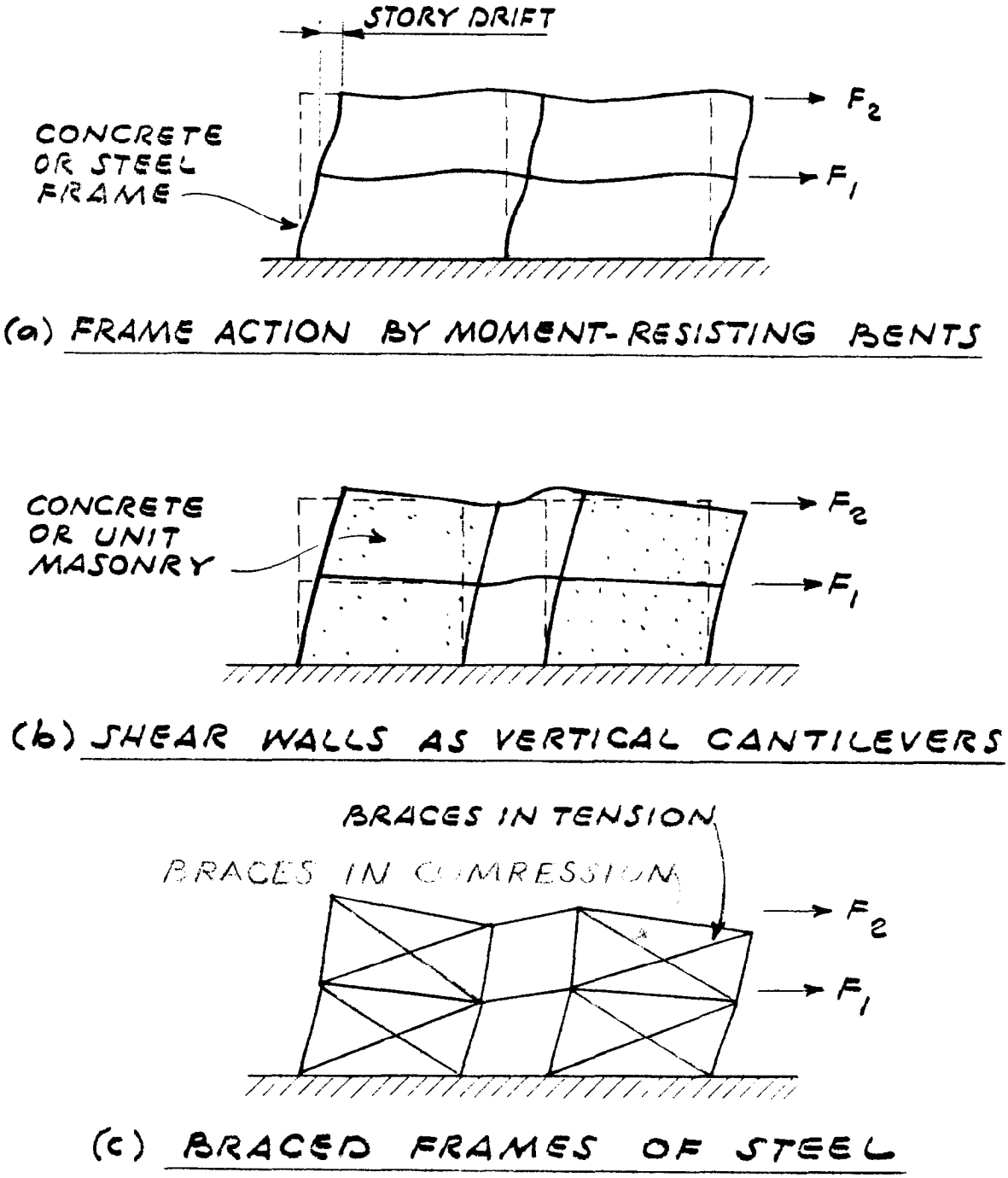

Figure 2-2. Vertical elements of the lateral force resisting systems.

tric location of lateral force resisting structural elements—such as in the case of a building that has a flexible front because of large openings and an essentially stiff (solid) rear wall—can usually be avoided by better conceptual planning. For example, modify the stiffness of the rear wall or add rigid structural partitions to make the center of rigidity of the lateral force resisting elements close to the center of mass. When a building has irregular features, such as asymmetry in plan or vertical discontinuity y, the assumptions used in developing seismic criteria for buildings with regular features may not apply. For example, planners often omit partitions and exterior walls in the first story of a building to permit an open ground floor; in this case the columns at the ground level are the only elements available to resist lateral forces, and there is an abrupt change in the rigidity of the vertical elements of the lateral force resisting system at that level. This condition, generally referred to as a soft story, is undesirable. It is advisable to carry all shear' walls down to the

foundation. It is best to avoid creating buildings with irregular features; however, when irregular features are unavoidable, special design considerations are required to account for the unusual dynamic characteristics and the load transfer and stress concentrations that occur at abrupt changes in structural resistance.

c. Ductility. For practical design purposes, due. tility is defined as the capacity of building materials, systems, or structures to absorb energy by deforming in the inelastic range. Ductility allows structures to withstand large earthquake forces when they have been designed economically on an elastic basis to lower, code-level forces. Structural steel is a ductile material, but when steel members are joined to make a lateral force resisting frame, special details are needed in order to ensure ductile behavior of the assembly. Brittle materials such as concrete and unit masonry can be reinforced with steel to provide strength, but they need additional details to achieve the ductility characteristics necessary to resist large seismic forces. In concrete columns, for example, the combined effect of flexure (due to frame action) and compression (due to the action of the overturning moment of the structure as a whole) produces a common mode of failure: buckling of the vertical steel and spalling of the concrete cover near the floor levels. In columns with proper spiral reinforcing or closely spaced hoops, the reinforcing has a confining effect that produces greater reserve strength and ductility.

d. Redundancy. Redundancy is a highly desirable characteristic for earthquake resistant design. When the primary element or system yields or fails, the lateral force can be redistributed to secondary elements or systems to prevent progressive failure.

e. *Connectivity.* It is essential to tie the various structural elements together so that they act as a unit. The connections between the elements are at least as important as the elements themselves. Prevention of collapse during a severe earthquake depends upon the inelastic energy absorbing capacity of the structure, and this capacity should be governed by the elements rather than by their connections; in other words, connections should not be the weak link in the structure. As a general guide, if no other requirements are specified, connections should be adequate to develop the useful strength of the structural elements connected, regardless of the calculated stress due to the prescribed seismic forces.

f. Nonstructural participation. For both analysis and detailing, the effects of nonstructural partitions, filler walls, and stairs must be considered. The nonstructural elements that are rigidly tied to the structural system can have a substantial influence on the magnitude and distribution of earthquake forces. Such elements act somewhat like shear walls, stiffening the building and causing a reduction in the natural period and an increase in the lateral forces and overturning moments. Any element that is not strong enough to resist the forces that it attracts will be damaged; it should be isolated from the lateral force resisting system.

g. *Damage control features.* The design of a structure in accordance with the seismic provisions of this manual will not fully ensure against earthquake damage because the horizontal deformations from design forces are lower than those that can be expected during a major earthquake. However, without increasing construction costs, a number of things can be done to limit earthquake damage that would be expensive to repair. In considering a building's response to earthquake motions, it is important to keep in mind the structural system and the geometry of the building. It should be assumed that deformation (story drift) during a major earthquake may be several times that resulting from the design lateral forces. A list of features to minimize damage follows:

(1) Details that allow structural movement without damage to nonstructural elements can be provided. Damage to such items as piping, glass, plaster, veneer, and partitions may constitute a major financial loss. To minimize this type of damage, special care in detailing, either to isolate these elements or to accommodate the movement, is required.

(2) Glass windows should be isolated with adequate clearance and flexible mountings at edges to allow for frame distortions.

(3) Rigid nonstructural partitions should have room to move at the top and sides.

(4) In piping installations, the expansion loops and flexible joints used to accommodate temperature movement are often adaptable to accommodating seismic deflections.

(5) Freestanding shelving can be fastened to walls to prevent toppling. Shelves can be provided with lips or edge restraints to prevent contents from falling off in an earthquake.

2-8. Alternatives to the prescribed provisions.

Alternatives to the seismic provisions of this manual are permitted if they can be properly substantiated. The most common alternative is dynamic analysis. Dynamic analysis may be required for such cases as irregular buildings and buildings with setbacks. The provisions herein will indicate when dynamic analysis is required. Dynamic analysis may be used as an option for such cases as making a more, efficient design or design-

ing to a particular earthquake ground motion. In any case, using dynamic loading and computer analysis, one can more accurately predict how a proposed building will act and deform under ground motions from a specific earthquake. The resulting deformations may sometimes cause joint rotations and stresses quite different from those determined from the prescribed static loadings. Before proceeding with the equivalent static force procedure, the designer should make sure that there are no special conditions that would warrant or require the use of more rigorous methods.

a. Elastic dynamic analysis. For most buildings requiring an alternative design method, an elastic dynamic analysis procedure is sufficient to determine load distribution and member forces for design earthquake motion. A response spectrum analysis with the modes combined by the square-root-of-the-sum-of-the-squares (SRSS) method or by some other approved method is generally sufficient for an elastic analysis. A time history analysis may be used if necessary.

b. Inelastic dynamic analysis. For major buildings, for which added assurance is required that the building can withstand a major earthquake without collapse or within a limited range of damage, an inelastic dynamic analysis may be used. This usually is a time history analysis; however, other approximate procedures that can estimate inelastic effects may be used.

c. *Seismic design guidelines for essential buildings.* When authorized by the approval agency, TM 5-809-10-1/NAVFAC P-355.l/AFM 88-3, Chap 13, Sec A will be used as a supplement to this manual for dynamic analysis procedures.

d. Innovative systems. There are new systems and devices for controlling and/or limiting the response of structures to earthquake ground motion. The best known of these systems are seismic isolation systems (sometimes called base isolation systems). Seismic isolation is based on the premise that the structure can be substantially decoupled from potentially damaging earthquake motions. By decoupling the structure from the ground motion, seismic isolation reduces the level of response in the structure from the level that would other wise occur in a conventional fixed-base building, or conversely, offers the advantage of designing with a reduced level of earthquake load to achieve the same degree of seismic protection and reliability as a conventional fixed-base building. Tentative provisions for seismic isolation are given in the SEAOC Commentary, Appendix 1L. The subject is not covered in this manual because it requires the knowledge of specialists. Provisions for other innovative systems such as damping devices are not covered in this manual; they are in various stages of development, ragning from concept to implementation.

2-9. Future expansion. When future expansion of a building is contemplated, it is generally better to plan for horizontal expansions rather than for vertical growth because there will be greater freedom in planning the future increment, there will be less interruption of existing operations when additions are made, and the first increment will not have to bear a large share of the cost of the second increment. For future vertical expansion, the foundation, floor/roof system, and structural frame must be proportioned for both the initial and the future design loadings, including the seismic forces. For future horizontal expansion, either a complete structural separation between the two phases must be provided, or the first increment must be designed for its share of the loads under both conditions: the first increment and the expansion. Many buildings that have been designed for expansion under past seismic criteria do not satisfy the present criteria; if these buildings are to be expanded in the future, they will have to be evaluated to determine if upgrading is necessary. High cost may be incurred if seismic strengthening is required, especially in high seismic zones.

2-10. Existing buildings. Existing buildings may be upgraded, altered, or enlarged.

a. Upgrades. The upgrading of existing buildings is covered in TM 5–809–10–2/NAVFAC P-355.2/AFM 88-3, Chap 13, Sec B.

b. Alterations. When a building is altered, it will be subject to upgrading if the alteration would reduce the vertical and/or lateral load carrying system capacity or if an alteration in function puts the building in an essential or hazardous occupancy category.

c. *Additions.* Vertical and horizontal extensions can have a drastic effect on the performance of the building. Therefore, additions should be kept structurally separate from the existing building whenever possible. When the addition is not separated and a significant change occurs in the total weight, in the weight distribution, or in the building lateral force resisting system's rotational or translational stiffness, an upgrade will be done.

2-11. Major checkpoints. The process of achieving an adequate building must start with conceptual planning and be carried through all phases of the design and construction program. The major check points include site investigation; coordination of the work of the architect and engineers (structural, mechanical, and electrical), to **estab-**

lish the plan, the system, and the materials of construction; establishment of design criteria for the specific facility; identification and location of primary structural elements; determination and distribution of lateral seismic forces; preparation of design calculations; detailing of connections; detailing of nonstructural parts for damage control; preparation of clear, complete contract drawings and specifications; checking of shop drawings; quality control inspection; and surveillance over any change in conditions during the entire construction period.

CHAPTER 3

DESIGN CRITERIA

3-1. Introduction. This chapter prescribes the criteria for the seismic design of buildings and other structures based on an equivalent static force procedure.

3-2. General. The seismic design of buildings and other structures will be in accordance with the criteria and design standards herein. The structural system or type of construction will be based on a rational analysis in accordance with established principles of mechanics. Structures will be designed for dead, live, snow, wind, and seismic forces. The dead, live, snow, and wind loads will be as given in TM 5–809–l/AFM 88–3, Chap 1. Every building or structure and every portion thereof will be designed and constructed to resist stresses produced by lateral seismic forces in combination with dead and live loads as provided in this chapter. Materials and details will conform to the seismic provisions, applicable guide specifications, and criteria herein. The provisions of this chapter apply to the structure as a unit and also to all of its parts. In Zone 1, if the seismic base shear is less than one-third of the total lateral wind forces *on* the building, a seismic design is not required. In Zone O there are no seismic requirements.

3-3. Seismic design provisions. The seismic provisions of this manual are in accordance with SEAOC, except as modified herein. They are obtained from the following sources—

a. *Structural Engineers Association of California (SEAOC). The 1990* edition of the SEAOC recommendations, which includes recommendations, appendixes, and commentary, is the basic reference document. The SEAOC recommendations are discussed at appropriate places in this manual. References in this manual to SEAOC provisions have the following format: "SEAOC 1D8a" refers to Section lD8a of the SEAOC provisions. Detailed explanations of the SEAOC provisions will be found in the SEAOC commentary.

b. American Concrete Institute (ACI). ACI 318 is the basic reference for concrete construction in this manual. Chapter 21 of ACI 318–89 is the basic reference for seismic provisions. References in this manual to ACI provisions have the following format: "ACI 21.3.1" refers to Section 3.1 of Chapter 21 of ACI 318–89. The SEAOC recommendations are based on ACI 318–83, including ACI Appendix A as amended by SEAOC. These amendments, given in SEAOC Chapter 3, have been superseded. Refer to appendix C in this manual for equivalent amendments to Chapter 21 of ACI 318–89. In ACI 21.2.1, regions of moderate seismic risk should be understood to be Seismic Zone 2; regions of high seismic risk, Zones 3 and 4.

c. *American Institute of Steel Construction (AISC).* The *Manual of Steel Construction* is the basic reference for steel construction in this manual. Because the SEAOC recommendations were completed before the 9th edition was published, the provisions for seismic design of steel frames given in SEAOC Chapter 4 reference the 8th edition of the AISC manual. The SEAOC references to AISC have to do with exceptions to AISC regarding such things as allowable stresses and width-thickness ratios. References in this manual to the AISC manual have the following format: "AISC 1.4. 1" refers to Section 1.4.1 of the specifications in the AISC manual. To use the 9th edition of the AISC ASD manual, refer to the conversion table on AISC in the specifications.

d. International Conference of Building Officials (ICBO). The SEAOC provisions refer to the *Uniform Building Code* (UBC), published by ICBO.

3-4. Seismic zone map. The seismic zones used to determine the factor Z are shown in figure 3–1. Seismic zones for specific areas are tabulated in tables 3–1 and 3-2 for localities within and outside the United States, respectively. Table 3–1 takes precedence over the map. For sites not covered by the tables, note that the map boundary lines are approximate, and in the event of any conflict or uncertainty regarding the applicable zone of any particular site, the higher zone will be used.

3-5. Seismic zone factor, Z. The factor Z is determined by the seismic zone:

Zone 4, Z = 0.40
Zone 3, Z = 0.30
Zone 2B, Z = 0.20
Zone 2A, Z = 0.15
Zone 1, Z = 0.075

3-6. Types of occupancy. The following descriptions of military service occupancy categories supplement or modify SEAOC 1D4 unless other directions are given by the user agency. Refer to SEAOC Table 1-C for SEAOC occupancy categories.

a. *Category I—Essential Facilities.* These are critical facilities that are necessary for postdisaster recovery and must be kept operating contin-

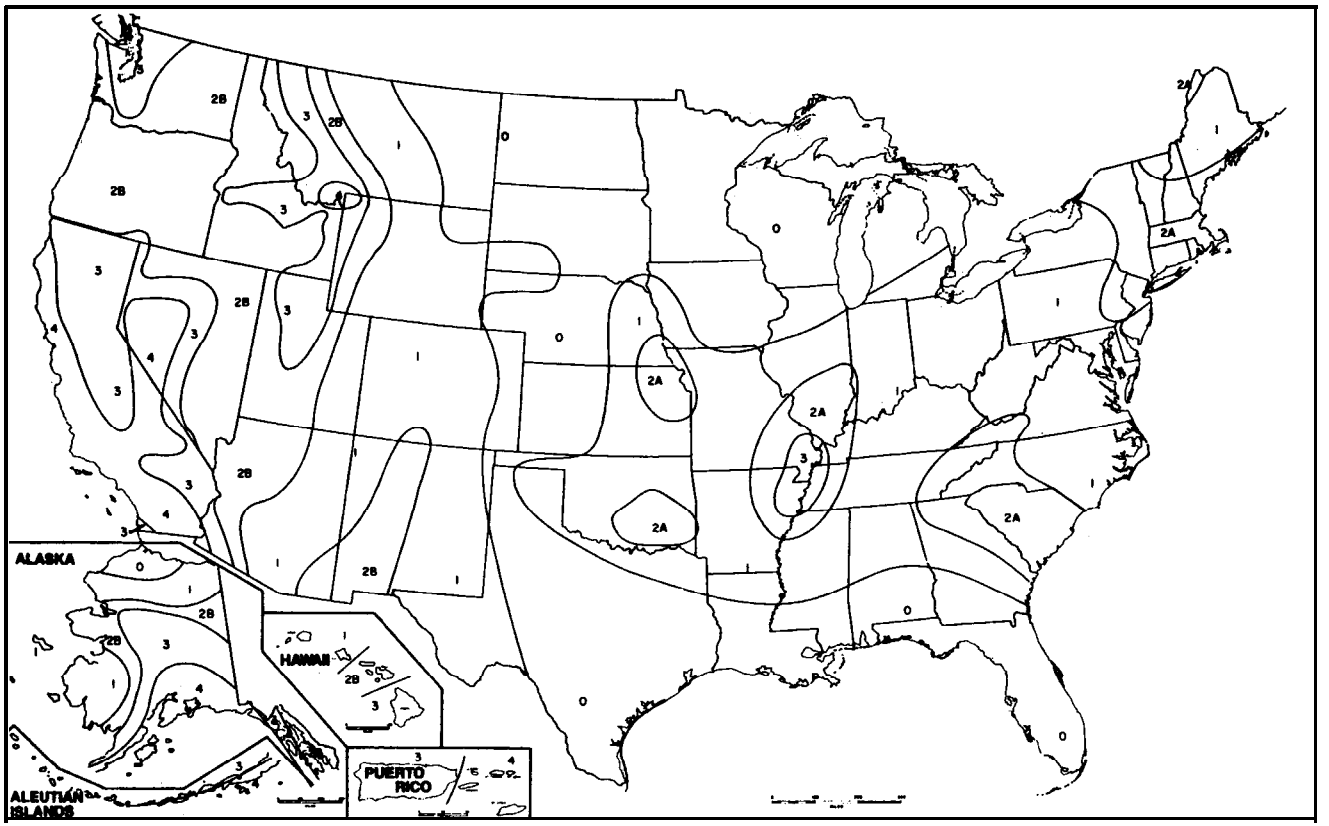

Reproduced from the 1991 edition of the Uniform Building Code, copyright © 1991, with me permission of the publishers, the International Conference of Building Officials.

Figure 3-1. Seismic zone map of the United States.

ALABAMA
- Anniston 2A
- Maxwell AFB. 0
- Birmingham 2A
- Huntsville 1
- Mobile 0
- Montgomery 0
- Fort Rucker 0

ALASKA
- Adak Island 4
- Anchorage. 4
- Aleutian Islands 4
- Barrrow 1
- Bethel 2B
- Eielson AFB 3
- Elmendorff AFB 4
- Fairbanks. 3
- Fort Greely 3
- Juneau 3
- Kodiak Island 4
- Nome 1

ARIZONA
- Fort Huachuca 2B
- Luke AFB 1
- Navajo AD 1
- Phoenix 1
- Tucson 1
- Williams AFB 1
- Puma 4
- YumaPruvingGrounds 3

ARKANSAS
- Eaker AFB 3
- Fort Chaffee 1
- Little Rock AFB 1
- Pine Bluff 1

CALIFORNIA
- Castle AFB 3
- China Lake 4
- Edwards AFB 4
- Hamilton AFB 4
- Hunter-Ligget MR 4
- Long Beach 4
- Los Angeles 4
- March AFB 4
- Mare Island 4
- Norton AFB 4
- Oakland 4
- Fort Ord 4
- Camp Pendleton 4
- Port Hueneme 4
- Sacramento 3
- San Diego 4
- San Francisco 4
- Sharped. 3
- Sierra AD 3
- Travis AFB 4
- Vandenberg AFB 4

COLORADO
- USAF Academy 1
- Fort Carson 1
- Denver 1
- Fitzsimmons AMC 1
- Peterson Field 1
- Pueblo 1

CONNECTICUT
- Hartford 2A
- New Haven 2A
- New London 2A

DELAWARE
- Dover AFB 1
- Wilmington 2A

FLORIDA
- Eglin AFB 0
- Homestead AFB 0
- Jacksonville 1
- Key West 0
- MacDill AFB 0
- Miami 0
- Orlando 0
- Patrick AFB 0
- Pensacola. 0
- Tampa 0
- Tyndall AFB 0

GEORGIA
- Albany 1
- Atlanta 2A
- Fort Benning 1
- Fort Gordon 2A
- Hunter AFB 2A
- Macon 1
- Robins AFB 1
- Savannah 2A
- Fort Stewart 1

HAWAII
- Barbers Point Oahu 2B
- Hickam AFB 2B
- Hilo, Hawaii 4
- Honolulu, Oahu 2B
- Kaneohe Bay, Oahu 2B
- Lihue, Kauai 1
- Schofield Barracks 2B
- Wheeler 2B
- Wailuku, Maui 3

IDAHO
- Idaho Falls 2B
- Mountain Home AFB 2B

ILLINOIS
- Chanute AFB 1
- Chicago 1
- Great Lakes TC 1
- Joliet AAP 1
- O'Hare IAP 1
- Rock Island Arsenal 1

ILLINOIS (cont'd)
- Savanna AD 1
- Scott AFB 2A

INDIANA
- Fort Ben Harrison 2A
- Fort Wayne 2A
- Grissom AFB 1
- Indiana AAP 2A

IOWA
- Burlington 0
- Cedar Rapids 0
- Des Moines 0
- Sioux City 1

KANSAS
- Kansas AAP 1
- Fort Leavemworth 2A
- McConnell AFB 1
- Fort Riley 2A
- Sunflower AAP. 2A

KENTUCKY
- Fort Campbell 2A
- Lexington 1
- Louisville 2A
- Fort Knox 2A

LOUISIANA
- Fort Polk 0
- Lake Charles 1
- Louisiana AAP 1
- New Orleans 0
- Shreveport 1

MAINE
- Bangor 1
- Brunswick 2A
- Cutler. 2A
- Loring AFB 1
- Winter Harbor 1

MARYLAND
- Aberdeen Proving Ground 1
- Andrews AFB 1
- Annapolis 1
- Baltimore 1
- Fort Detrick 1
- Fort Meade 1
- Fort Ritchie 1

MASSACHUSETTS
- Boston 2A
- Fort Devens 2A
- LG. Hanscom Fieid 2A
- Otis AFB 2A
- Westover AFB. 2A

MICHIGAN
- Detroit 1
- Kincheloe AFB 1

Table 3-1. Seismic zone tabulation- United States.

MICHIGAN (cont'd)
- K.I. Sawyer AFT 0
- Selfridge AFB 1
- Wurtsmith AFT 0

MINNESOTA
- Duluth 0
- Minneapolis 0
- Osceola AFB 0

MISSISSIPPI
- Biloxi.. 0
- Columbus AFB 1
- Jackson 1
- Keesler AFB 0
- Meridan 1

MISSOURI
- Kansas City 2A
- Lake City AAP 2A
- Fort Leonard Wood. 1
- St. Louis 2A
- Richards Gebaur AFB 2A
- Whiteman AFB 1

MONTANA
- Helena 3
- Malmstrom AFB 2B
- Missoula 2B

NEBRASKA
- Cornhusker AAP 1
- Lincoln 1
- Offutt AFB 1

NEVADA
- Carson City 3
- Fallon 4
- Hawthorne 4
- LasVegaa 2B

NEW HAMPSHIRE
- Hanover 2A
- Pease AFB 2A
- Portsmouth 2A

NEW JERSEY
- Atlantic City 1
- Bayonne 2A
- Picatinny Arsenal 2A
- McGuire AFB 1
- Fort Monmouth 2A

NEW YORK
- Albany. 2A
- Buffalo 2A
- Fort Drum 2A
- Griffiiss AFB 2A
- New York 2A
- Niagara Falls IAP 2A
- Plattsburg AFB 2A
- Syracuse 1
- West Point Military Reservation 2A
- Watervliet 2A

NORTH CAROLINA
- Fort Bragg 1
- Charlotte 2A
- Camp Lejeune 1
- Greensboro 2A
- Pope AFB 1
- Seymour Johnson 1
- Sunny Point Ocean Terminal 1

NORTH DAKOTA
- Bismarck 0
- Fargo 0
- Grand Forks AFB 0
- Minot AFB 0

OHIO
- Cincinnati 1
- Cleveland 1
- Columbus 1
- Ravenna AAP 1
- Wright-Patterson AFB 1

OKLAHOMA
- Enid/Vance AFB 1
- Fort Sill 1
- Tinker AFB 2A
- Tulsa. 1
- McAlester AAP 2A
- Altus AFB 1

OREGON
- Coos Bay 2B
- Eugene 2B
- Portland 2B
- Umatilla AD 2B

PENNSYLVANIA
- Carlisle Barracks 1
- Harrisburg 1
- Letterkenny AD 1
- Philadelphia 2A
- Pittsburgh, ... 1
- Scranton 2A

NEW MEXICO
- Albuquerque 2B
- Cannon AFB 1
- Holloman AFB 1
- White Sands MR 1
- Kirtland AFB 2B
- Sacramento PK 1

RHODE ISLAND
- Newport 2A
- Providence 2A

SOUTH CAROLINA
- Beaufort 3
- Charleston 3
- Fort Jackson 2A
- Parris Island 3
- Shaw AFB 2A

SOUTH DAKOTA
- Ellsworth AFB 1
- Pierre 0
- Sioux Falls 0

TENNESSEE
- Chattanooga 2A
- Holston AAP 2A
- Memphis 3
- Milan AAP 3
- Millington 3
- Nashville 1

TEXAS
- Austin/Bergatrom AFB 0
- Brooks AFB 0
- Carswell AFB 0
- Corpus Christi 0
- Dallas 0
- Dyess AFB 0
- Ellington AFB 0
- El Paso 1
- Fort Bliss 1
- Fort Sam Houston 0
- Galveston 0
- Goodfellow AFB 0
- Fort Hood 0
- Fort Worth 0
- Houston 0
- Kelly AFB 0
- Lackland AFB 0
- Laughlin AFB 0
- Lone Star AAP 1
- Longhorn AAP 1
- Randolph AFB 0
- Red River AD 1
- Reese AFB 0
- San Antonio 0
- Sheppard AFB 1
- Wichita Falls 0

UTAH
- Dugway P.G. 2B
- Hill AFB 3
- Salt Lake City 3
- Tooele ArmyDepot 3

VERMONT
- All 2A

VIRGINIA
- Fort Belvoir 1
- Fort Eustis 1
- Fort Meyer 1
- Norfolk 1
- Petersburg/Fort Lee 1
- Quantico 1
- Radford AAP 2A
- Richmond 1
- Vint Hill Farms Station 2A
- Warrenton 2A

Table 3-1. Continued

WASHINGTON	
Bremerton	3
Fairchild AFB	2B
Fort Lewis	3
McChord AFB	3
Seattle	3
Walla Walla	2B
Yakima	2B
WASHINGTON,DC	
Bolling AFB	1
Fort McNair	1
Walter Reed AMC	1
WEST VIRGINIA	
All	1
WISCONSIN	
All	0
WYOMING	
Cheyenne	1
Yellowstone	3

Table 3-1. Continued

uously during and after an earthquake. This category includes facilities where damage from an earthquake may cause significant loss of strategic and general communications and critical mission response capability. In addition to the items in SEAOC Table l–C, the following are categorized as essential facilities:

(1) Facilities involved in handling or processing sensitive munitions, nuclear weaponry or materials, gas and petroleum fuels, and chemical or biological contaminants.

(2) Facilities involved in operational missile control, launch, tracking, or other critical defense capabilities.

(3) Mission-essential and primary communication or data-handling facilities.

b. Category II–Hazardous Facilities. These are defined in SEAOC Table l-C.

c. *Category III—Special Occupancy Structures. These* are structures where primary occupancy is for assembly of a large number of people, where the primary use is for people who are confined (e.g., prisons), or where services are provided to a large area or large number of other buildings. Buildings in this category may suffer damage in a large earthquake but are recognized as warranting a higher level of safety than the average building. An example of a special occupancy structure is one having high-value equipment when justification is provided by the using agency.

d. Category IV—Standard Occupancy Structures. This category includes all facilities not included in the categories above.

e. Multiple occupancies. Buildings with multiple occupancies will be categorized according to the most important occupancy unless the portion of the building that houses the most important occupancy can be shown to satisfy the requirements for that occupancy.

3-7. Importance factors. **The** importance factor is a multiplier that increases the design lateral force levels for certain occupancies. Values of I-factors for all occupancy categories are given in SEAOC Table l-D. Use of these I-factors requires that specific quality control requirements be met. These requirements are discussed in SEAOC.

3-8. Approved systems. Any building designed within the scope of this manual must qualify under one or more of the classifications under general categories A, B, C, and D in SEAOC Table l–G. If there is doubt as to which of two classifications governs, the one with the smaller value of R_w should be used. If the building does not appear to be covered by any of the classifications, the structural system must be modified to conform to one of the classifications, or justification must be made for the argument that the structural system will satisfy the intent of the seismic design provisions as prescribed in SEAOC 1D9b.

3-9. Dynamic analysis. TM 5-809-10-1/NAVFAC P-355.l/AFM 88-3, Chap 13, Sec A, will be used instead of SEAOC lF when the dynamic analysis procedure is used.

3-10. Quality control.

a. General. The SEAOC provisions require that a certain level of quality control be provided. Observation of actual structural performance in earthquakes has indicated that the details of

design and construction often dominate the seismic performance. The SEAOC provisions are based on the premise that special design, construction review, inspection, and observation can improve the performance of the structure more effectively than reliance on increased design force levels. In Zones 2, 3, and 4, for Occupancy Categories I, II, and III, SEAOC 1K requires that special quality control requirements be exercised during both the design phase and the construction phase of a project. When standard Department of Defense (DOD) quality control procedures do not meet the SEAOC lK requirements, supplemental procedures should be initiated to meet these requirements.

AFRICA:

Algeria:
- Alger 3
- Oran 3

Angola:
- Luanda 0

Benin:
- Cotonou 0

Botswana:
- Gaborone 0

Burundi:
- Bujumbura 3

Cameroon
- Douala 0
- Yaounde 0

Cape Verde
- Praia 0

Central African Republic:
- Bangui 0

Chad:
- Ndjamena 0

Congo
- Brazzaville 0

Djibouti
- Djibouti 3

Egpt:
- Alexandria 2A
- Cairo 2A
- Port Said 2A

Equatorial Guinea:
- Malabo. 0

Ethiopia:
- Addis Ababa 3
- Asmara. 3

Gabon
- Libreville 0

Gambia
- Banjul 0

Ghana:
- Accra 3

Guinea:
- Bisaau l
- Conakry 0

Ivory Coast
- Abidjan 0

Kenya:
- Nairobi 2A

Lesotho
- Maseru 2A

Liberia:
- Monrovia 1

Libya:
- Tripoli 2A
- Wheelus AFB. 2A

Malagasy Republic
- Tananarive 0

Malawi:
- Blantyre 3
- Lilongwe 3
- Zomba 3

Mali:
- Bamako 0

Mauritania
- Nouakchott 0

Mauritius:
- Port Louis.. 0

Morocco:
- Casablanca 2A
- Port Lyautcy 1
- Rabat 2A
- Tangier 3

Mozambique
- Maputo 2A

Niger:
- Niamey 0

Nigera:
- Ibadan 0
- Kaduna 0
- Lagos 0

Republic of Rwanda:
- Kigali 3

Senegal
- Dakar 0

Seychelles
- Victoria 0

Sierra Leone
- Freetown 0

Somalia:
- Mogadishu 0

South Africa:
- Cape Town 3
- Durban 2A
- Johannesburg 2A
- Natal 1
- Pretoria 2A

Swaziland
- Mbabane 2A

Tanzania:
- Dar es Salaam 2A
- Zanzibar 2A

Togo:
- Lome 1

Tunisia:
- Tunis 3

Uganda
- Kampala 2A

Upper Volta:
- Ougadougou 0

Zaire:
- Bukavu 3
- Kinshasa 0
- Lubumbashi 2A

Zambia:
- Lusaka 2A

Zimbabwe:
- Harare (Saliabury) 3

ASIA:

Afghanistan:
- Kabul 4

Bahrain
- Manama 0

Bangladesh
- Dacca 3

Brunei:
- Bandar Seri Begawan l

Burma:
- Mandalay 3
- Rangoon 3

China:
- Canton 2A
- Chengdu 3
- Nanking 2A
- Peking 4
- Shanghai 2A
- Shengyang 4
- Tihwa 4
- Tsingtao 3
- Wuhan 2A

Cyprus:
- Nicosia 3

Hong Kong
- Hong Kong 2A

India:
- Bombay 3
- Calcutta 2A
- Madras l
- New Delhi 3

Indonesia:
- Bandung 4
- Jakarta 4
- Mean 3
- Surabaya 4

Iran:
- Isfahan 3
- Shiraz 3
- Tabriz 4
- Tehran 4

Iraq:
- Baghdad 3
- Basra 1

Israel:
- Haifa 3
- Jerusalem 3
- Tel Aviv 3

Japan:
- Fukuoka 3
- Itazuke AFB 3
- Misawa 3
- Naha, Okinawa 4
- Osaka/Kobe. 4
- Sapporo 3
- Tokyo 4
- Wakkanai 3
- Yokohama 4
- Yokota 4

Jordan:
- Amman. 3

Korea:
- Kwangju 1
- Kimhae 1
- Pusan 1
- Seoul 0

Kuwait:
- Kuwait 1

Table 3-2. Seismic zone tabulation-outside United States.

Laos:
Vientiane 1
Lebanon:
Beirut 3
Malaysia:
Kuala Lumpur 1
Nepal:
Kathmandu 4
Oman:
Muscat 2A
Pakistan:
Islamabad 4
Karachi 4
Lahore 2A
Peshawar 4
Quatar:
Doha 0
Saudi Arabia:
Al Batin 1
Dhahran 1
Jiddah 2A
Khamis Mushayf 1
Riyadh 0
Singapore
All 1
South Yemen:
Aden City 3
Sri Lanka:
Colombo 0
Syria:
Aleppo 3
Damascus 3
Taiwan:
All 4
Thailand:
Bangkok 1
Chiang Mai 2A
Songkhla 0
Udorn 1
Turkey:
Adana. 2A
Ankara. 2A
Istanbul 4
Izmir 4
Karamursel 3

United Arab Emirates
Abu Dhabi 0
Dubai 0
Viet Nam:
Ho Chi Minh City(Saigon) . ..0
Yemen Arab Republic:
Sanaa 3

ATLANTIC OCEAN AREA:

Azores:
All 2A
Bermuda:
All 1

CARIBBEAN SEA:

Bahama Island:
All 1
Cuba
All 2A
Dominican Republic
Santo Domingo 3
French West Indies:
Martinique 3
Grenada
Saint Georges 3
Haiti:
Port au Prince 3
Jamaica:
Kingston 3

Leeward Islands:
Al1 3
Puerto Rico:
All 2B
Trinidad & Tobago:
All 3

CENTRAL AMERICA:

Belize
Belmopan 2A
Canal Zone
All 2A
Costa Rica:
San Jose 3
El Salvador:
San Salvador 4
Guatemala
Guatemala 4
Honduras:
Tegucigalpa 3
Nicaragua
Managua 4
Panama
Colon 3
Galeta 2B
Panama 3
Mexico:
Ciudad Juarez 2A
Guadalajara 3
Hermosillo 3
Matamoros 0
Mazatlan 2A
Merida 0
Mexico City 3
Monterrey 0
Nuevo Laredo 0
Tijuana 3

EUROPE:

Albania:
Tirana 3
Austria:
Salzburg 2A
Vienna 2A
Belgium
Antwerp 1
Brussels 2A
Bulgaria:
Sofia 3
Czechoslovakia:
Bratislava 2A
Prague 1
Denmark:
Copenhagen 1
Finland
Helsinki 1
France:
Bordeaux 2A
Lyon 1
Marseille 3
Nice 3
Paris 0
Strasbourg 2A
Germany, Federal Republic:
Berlin 0
Bonn 2A
Bremen 0
Dusseldorf 1
Frankfurt 2A
Hamburg 0
Munich 1
Stuttgart 2A
Vaihigen 2A
Greece
Athena 3
Kavalla 4
Makri 4
Rhodes 3
Sauda Bay 4
Thessaloniki 4
Hungary:
Budapest 2A
Iceland:
Keflavick. 3
Reykjavik 4
Ireland:
Dublin 0
Italy:
Aviano AFB 3
Brindisi 0
Florence 3
Genoa 3
Milan 2A
Naples 3
Palermo 3
Rome 2A
Sicily 3
Trieste 3
Turin 2A
Luxembourg:
Luxembourg 1
Malta:
Valletta 2A
Netherlands:.
All 0
Norway:
Oslo 2A
Poland
Krakow 2A
Poznan 1
Warszawa 1

Table 3-2. Continued.

Portugal:
- Lisbon 4
- Opporto 3

Romania
- Bucharest 3

Spain
- Barcelona 2A
- Bilbao 2A
- Madrid 0
- Rota 2A
- Seville 2A

Sweden
- Goteborg 2A
- Stockholm l

Switzerland
- Bern 2A
- Geneva l
- Zurich 2A

United Kingdom
- Belfast 0
- Edinburgh l
- Edzell l
- Glasgow/Renfrew l
- Hamilton l
- Liverpool l
- London 2A
- Londonderry l
- Thurso 1

U.S.S.R:
- Kiev 0
- Leningrad 0
- Moscow 0

Yugoslavia
- Belgrade 2A
- Zagreb 3

NORTH AMERICA:

Greenland
- All 1

Canada
- Argentina NAS 2A
- Calgary, Alb 1
- Churchill, Man 0
- Cold Lake, Alb 1
- Edmonton, Alb l
- E. Harmon, AFB 2A
- Fort Williams, Ont 0
- Frobisher N.W.Ter 0
- Goose Airport 1
- Halifax 1
- Montreal, Quebec 3
- Ottawa, Ont 2A
- St. John's Nfld 3
- Toronto, Ont. 1
- Vancouver 3
- Winnepeg, Man. 1

SOUTH AMERICA:

Argentina
- Buenos Aires 0

Brazil:
- Belem 0
- Belo Horizonte 0
- Brasilia 0
- Manaus 0
- Porto Allegre 0
- Recife 0
- Rio de Janeiro 0
- Salvador 0
- Sao Paulo 1

Bolivia
- La Pas 3
- Santa Cruz 1

Chile
- Santiago 4
- Valparaiso 4

Colombia
- Bogata 3

Ecuador:
- Quito 4
- Guayaquil 3

Paraquay:
- Asuncion 0

Peru:
- Lima 4
- Piura 4

Uruguay
- Montevideo 0

Venezuela:
- Maracaibo 2A
- Caracas 4

PACIFIC OCEAN AREA:

Australia
- Brisbane 1
- Canberra l
- Melbourne l
- Perth l
- Sydney l

Caroline Islands:
- Koror, Paulau Is. 2A
- Ponape 0

Fiji
- Suva 3

Johnson Island
- All l

Mariana Islands
- Guam 3
- Saipan 3
- Tinian 3

Marshall Islands
- All 1

New Zealand
- Auckland 3
- Wellington 4

Papau New Guinea
- Port Moresby 3

Phillipine Islands:
- Cebu 4
- Manila 4
- Baguio 3

Samoa:
- All 3

Wake Island
- All 0

Table 3-2. Continued,

CHAPTER 4

APPLICATION OF CRITERIA

4-1. Introduction. This chapter provides guidance for the application of the criteria specified in chapter 3. Chapter 4 is concerned with the building as a whole. Procedures for designing and detailing of the structural elements of a building are discussed in chapters 5 through 10. Detailed examples for specific types of structures are included in appendix D of this manual.

a. Expected performance. The general objectives are approached with reference to a major level (or maximum expected level) of earthquake ground motion having a 10 percent probability of exceedance in 50 years. This ground motion is characterized by a peak ground acceleration, Z, and a site spectrum, ZC, that are functions of the fundamental period of vibration, T. ZC sets the force for a structure that remains elastic at 5 percent of critical damping during this ground motion. It is impracticable to design for this level of force; moreover, it is not necessary because a building that is designed to reach its elastic limit at lower force levels can survive the earthquake by yielding and absorbing energy. SEAOC recommendations provide criteria for structural systems that are expected to safeguard against major failures and loss of life at the ground motion represented by ZC, when designed to a force level that is reduced through a response modification coefficient, R_w. The designer must be aware that designing the lateral force resisting elements for the reduced force level does not, in itself, necessarily ensure satisfactory performance. Special details for structural elements and connections are required to enable the structure to deform beyond the elastic limits of the materials. For buildings that may have unusual behavior, additional design criteria may be required to develop satisfactory performance.

b. Overview of the design procedure. The design procedure follows the general pattern listed below–

(1) The building as a whole.
- (a) Geologic conditions: Z, S. (para 4-2)
- (b) Facility conditions: I, H. (para 4-3)
- (c) Selection of method of analysis. (para 4-4)
- (d) Selection of structural system. (para 4-5)
- (e) C-factor and period: C, T. (para 4-6)
- (f) Base shear and weight: V, W. (para 4-7)
- (g) Principal axes of building. (para 4-8)
- (h) Distribution of lateral forces. (para 4-9)
- (i) Consideration of vertical forces. (para 4-10)
- (j) Detailed design requirements. (para 4-11)
- (k) Deformation requirements. (para 4-12)
  - *1.* Connections. (para 4-13)
  - *2.* The diaphragms. (para 4-14)
  - *3.* The elements and components. (para 4-15)
  - *4.* Nonbuilding structures. (para 4-16)
  - *5.* Design procedure.
    - *(a)* Planning. (para 4-17)
    - *(b)* Design. (para 4-18)

c. *Basis of design.* When developing seismic design criteria, there must be consistency on both sides of the demand versus capacity equation. Demand represents the applied forces resulting from the earthquake (i.e., the demands of the earthquake). Capacity represents the ability of the structural elements to resist the earthquake forces (i.e., the capacity of the structure). The basis for earthquake design is to supply sufficient capacity to satisfy the demands, that is, capacity equal to or greater than the demand. There are three general bases of design that are used in seismic design:

(1) *Allowable stress.* For this basis of design, the demands of the earthquake are reduced to a level that is consistent with working stress or service level procedures for calculating capacity. The factor R_w is used to reduce the site spectrum to a building design spectrum, with the subscript w representing working stress. For steel (under ASD) and wood, capacities are calculated on the basis of allowable stresses, which are set at some fraction of the strength of the material. For reinforced concrete, the demand is increased by load factors because capacities are calculated on a strength basis, and the load factors are set so that the basis of design is consistent with the working-stress basis for the other materials. This working-stress procedure is the basis for seismic design used in this manual.

(2) *Strength.* For this basis of design, the demands of the earthquake are reduced to a lesser degree for consistency with the strength basis for calculating the capacity of the structural elements. The factor R is used to reduce the site spectrum, and no load factors are applied to the seismic demand. (R_w is approximately equal to 1.5R.) This is the basis of design that was used for Applied Technology Council document ATC 3–06 which was the forerunner of the National Earthquake Hazard Reduction Program (NEHRP) seismic design provisions Federal Emergency Management

Agency (FEMA 95). For reinforced concrete, member capacities are calculated on the strength basis, in the same way they are under the working-stress basis of design, but R is used rather than R_w, and there is no load factor. For the other materials, which do not as yet have strength procedures, member capacities are calculated on a working-stress basis but with higher allowable stresses which are intended to be consistent with the use of R rather than R_w. It can be expected that when strength procedures are developed for wood, steel, and masonry, the working-stress basis will be abandoned. It should be noted that TM 5–809–10–1/ NAVFAC P-355.l/AFM 88-3, Chap 13, See A uses a strength basis for meeting the demand of EQ–I. There is no reduction factor R, but EQ–I is a smaller earthquake than that assumed in the other bases of design, and some yielding of structural elements is accepted.

(3) *Performance.* For this basis of design, there is no reduction of the forces associated with the site spectrum, but the structure is evaluated for its ability to absorb energy, deform inelastically, and exhibit ductile behavior. TM 5-809-10-1/ NAVFAC P-355.1/AFM 88-3, Chap 13, See A uses this basis of design for meeting the demand of EQ-II.

4-2. **Site conditions.** Guidance on the determination of Z and S is given in the following paragraphs.

a. Zone factor. The Z-factor represents the seismicity of the site. It is a measure of the effective peak ground acceleration having a 10 percent probability of exceedance in 50 years. The value of Z ranges from 0.40 in Seismic Zone 4 to 0.075 in Zone 1. The Z values and the seismic zone map are obtained from chapter 3. The SEAOC Seismic Zone 2 has been subdivided for assignment of the Z-factor: Zone 2A on the map, in the eastern and midwestern states, uses Z = O. 15; Zone 2B on the map, in the western states, uses Z = 0.20. The other SEAOC requirements for Zone 2 apply to both Zone 2A and Zone 2B on the map.

b. Soil factor. The value of S is determined from the characteristics of the soil profile at the building site. The soil profile will be established from properly substantiated geotechnical data, and the S-factor will be determined from SEAOC Table l-B. Generally, the value of S will vary from 1.0 to 1.5. In special cases it may be equal to 2.0.

(1) When geotechnical data are not available, the S-factor will be taken as 1.5.

(2) The S_4 profile was established in recognition of the potential for soft site effects such as those that exist in portions of Mexico City and those that were experienced to a lesser extent in some areas of the San Francisco Bay Area during the October 17, 1989, Loma Prieta earthquake. Soft sites such as filled-in lake beds or filled-in waterfront property may exhibit characteristics that amplify earthquake ground motion in the moderate-to-long structural period range (e.g., 1.0 to 3.0 seconds). When there is evidence that such a condition may exist, a geotechnical investigation will be required. Refer to SEAOC 1D8b(4) and lF2d.

4-3. Facility conditions. The building occupancy and height categories are required at the initial stages of seismic design.

a. The occupancy categories are defined in SEAOC Table 1-C as modified in chapter 3. The importance factor, I, is determined from SEAOC Table l-D.

b. The height of the building, H, is involved in a number of system limitations. Height limits that trigger various requirements are 65, 120, 160, and 240 feet, as shown in SEAOC Table 1–G and other parts of SEAOC.

4-4. Selection of method of analysis. The SEAOC recommendations prescribe two lateral force procedures (SEAOC 1D8): one is the static lateral force procedure; the other is the dynamic lateral force procedure. As will be seen in the summary below, most structures will be designed by the static lateral force procedure of SEAOC lE. Structures that do not qualify for the static lateral force procedure will require a dynamic analysis. Instead of using the provisions of SEAOC lF, the dynamic analysis will be done according to TM 5-809-10-1/NAVFAC P-355.1/AFM 88-3, Chap 13, See A. All structures located on Soil Profile Type S_4 and having a period greater than 0.7 seconds, will have a dynamic analysis. The other provisions of SEAOC 1D8 are summarized below.

a. Zone 1. The static procedures of SEAOC lE may be used for all structures unless in soil S_4 and period greater than 0.7 seconds.

b. Zone 2, Occupancy Category IV. The static procedures of SEAOC lE may be used for all structures unless in S_4 and period greater than 0.7 seconds.

c. Zone 2, *Occupancy Categories I, II, and III.* The same provisions as used in *Zones 3* and 4.

d. Zones 3 *and 4. The* static procedures of SEAOC lE may be used for the following structures.

(1) Regular structures under 240 feet in height with lateral resistance provided by systems listed in SEAOC Table l–G, unless in S_4 and period greater than 0.7 seconds.

(2) Irregular structures not more than 5 stories or 65 feet in height.

(3) Structures having a tower on a platform, as defined in SEAOC lD8a(4).

4-5. Building systems.

a. Space frame. Basic to understanding the structural systems is the concept of the space frame. The term *space frame* refers to the three-dimensional assemblage of structural elements. A complete space frame is one that consists of beams and columns that carry all of the gravity loads. When some of these frame elements are designed to resist seismic forces as well, the designated elements make up the frames that become the moment frames of the lateral force resisting system. Refer to figure 4–1. In an "incomplete" space frame, some frame elements are missing and floor framing is carried by shear walls or braced frames that are part of the lateral force resisting system. In other words, if the walls and braces are removed there will not be a complete gravity support system.

b. Structural systems.

(1) Bearing wall system (category A, SEAOC Table l-G). This system is characterized by shear wall or braced frame lateral force resisting elements that also support vertical loads (i.e., gravity

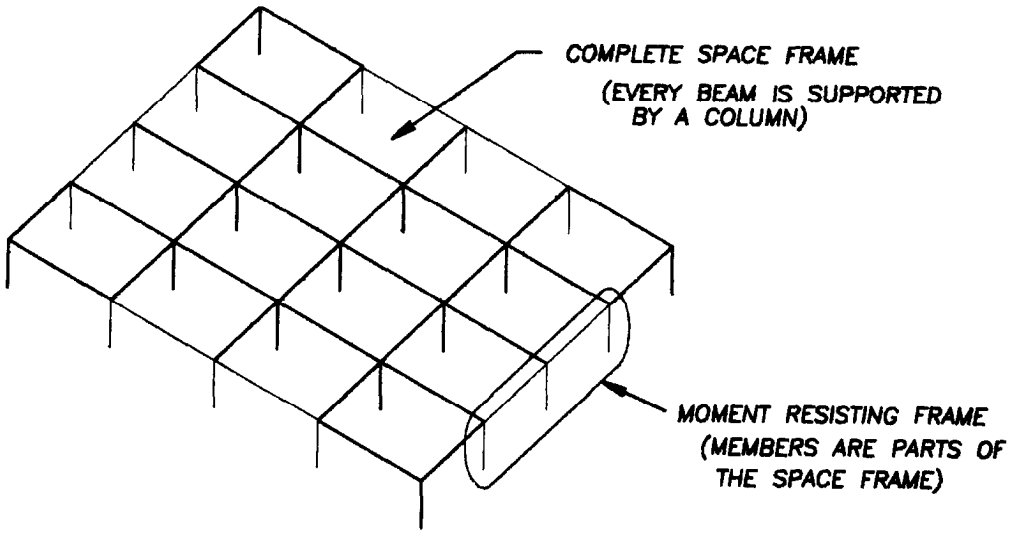

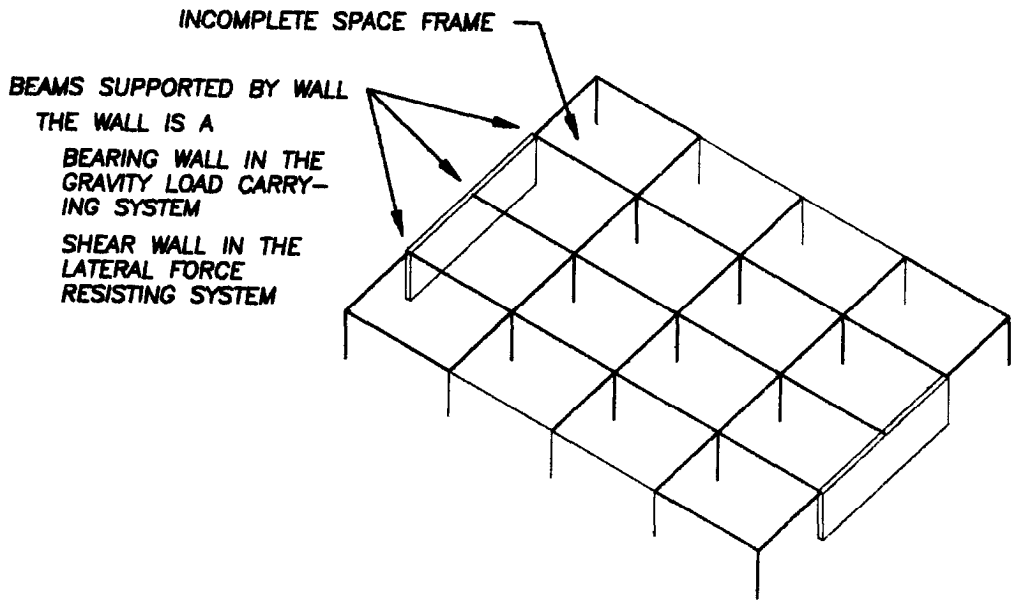

Figure 4–1. The space frame and the designated seismic moment resisting frame.

loads). If these elements fail due to lateral loads, there will be a loss of the vertical load capacity of a portion of the structure that can lead to a partial collapse or to vertical instability of the building.

(2) Building frame system (category B, SEAOC Table l-G). This system consists of a complete vertical load carrying space frame, with lateral load resistance provided by braced frames or nonbearing shear walls. This definition requires that the vertical load carrying frame be essentially complete. However, some exceptions are acceptable, such as minor load bearing walls around a stairwell if they do not significantly influence the lateral force characteristics or the vertical load capacity of the building. Also, basement walls below the level considered the base of the building may be bearing for loads originating at that level. The test for qualifying as a vertical load carrying space frame is to determine whether or not the building can support the vertical loads if the shear walls or braces are seriously damaged during an earthquake. While there is no requirement to provide lateral resistance in the vertical load framing, it is strongly recommended that nominal moment resistance be incorporated in the vertical load frame design. In structural steel, this might be in the form of nominal moment resisting beam flange and/or web connections to the columns. In reinforced concrete, the nominal moment resistance inherent in cast-in-place concrete may be considered sufficient to qualify for this system, while most types of precast concrete systems would not.

(3) Moment resisting frame system (category C, SEAOC Table l-G). The lateral force resisting systems are moment resisting frames. As in the case of the building frame system, the vertical load carrying frame must be essentially complete. The moment resisting frames must be capable of resisting the entire lateral force.

(4) Dual systems (category D, SEAOC Table 1-G), Dual systems are interactive combinations of shear walls or braced frames with moment frames. Generally, for tall buildings with a dual system, the shear walls, if they were to act independently, would deflect as vertical cantilevers, with greater interstory displacements occurring at the top, while the frames would deflect at a more uniform rate or with greater interstory displacements at the bottom (see fig 4-2). Usually in buildings that have a dual system, the diaphragms are rigid. With rigid diaphragms there is a forced compatibility of frame and wall deflection at each story, and this induces interaction forces between shear walls and frames. The pattern of these forces is such that the shear walls tend to support the frame at the lower stories and the frame tends to support the shear walls at the upper stories. In order to qualify as a dual system, the vertical load carrying space frame must be substantially complete. Special details are required according to the R_w value and seismic zone. The shear wall or braced frame and moment resisting systems will conform to both of the following criteria—

(a) The frame and shear walls or braced frames shall resist the total required lateral force in accordance with relative rigidities considering the interaction of the walls and frames as a single system. This analysis shall be made in accordance with the principles of structural mechanics considering the relative rigidities of the elements and torsion effects *in* the system. Deformations imposed upon members of the frame by the interaction with the shear wall or braced frame shall be considered in this analysis.

(b) The special moment resisting frame act. ing independently shall be capable of resisting not less than 25 percent of the total required lateral force, including torsion effects. Columns of the frame system may also function as the boundary elements of shear walls. As such, these columns must be designed to resist the vertical forces resulting from overturning moment in the shear wall along with the load effects associated with the frame system,

(5) *Undefined systems.* Undefined systems are those not listed in SEAOC Table l–G; they are assigned to category E in the table. This category includes such structures as A-frames, three-hinged arches, and rigid frames of wood. Such structures must have their basis of design justified in accordance with SEAOC 1D9b.

c. *R_w-factor.* Each of the four categories A, B, C, and D has a set of systems that are defined by their materials and characterized by a particular response modification coeficient, R_w. The &-factor represents the type of structural system and the nature of the structure itself. The value of R_w, which is obtained from SEAOC Tables 1–G and l-I, varies from 4 to 12 for buildings and from 3 to 5 for nonbuilding structures. Buildings that are considered to possess considerable inelastic deformation ability and/or have inherent redundancy are assigned the higher R_w values. Buildings that tend to be more brittle and lack redundancy are assigned the lower R_w values. Damping, to a certain extent, is also considered in the R_w value. Whereas buildings generally have a multiplicity of nonstructural and noncomputed resisting elements that effectively increase the resistance of the structure, structures other than buildings (i.e., nonbuilding structures) generally do not have such elements or have low damping characteristics and are assigned lower R_w values. Although the selec-

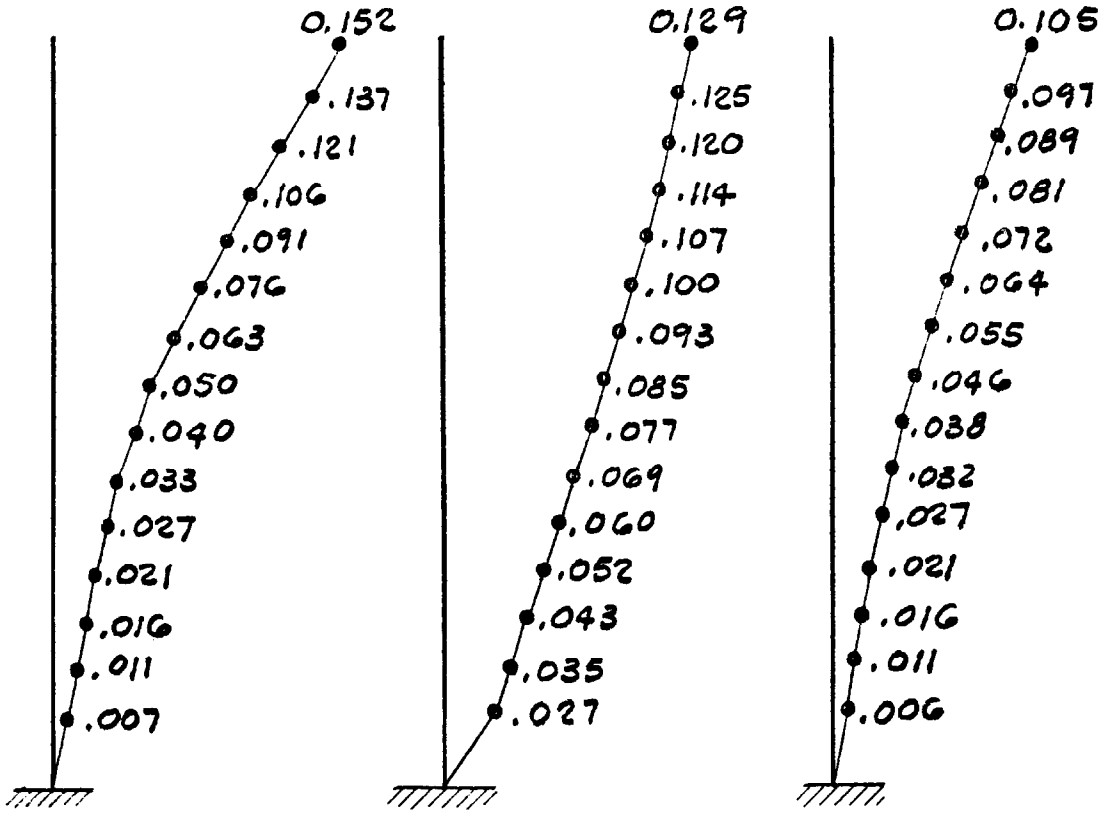

a.) SHEAR WALL ACTING INDEPENDENTLY (deflection shown for total building forces)

b.) MOMENT FRAME ACTING INDEPENDENTLY (deflections allow for 25% of total building forces)

c.) DUAL SYSTEM SHEAR WALL AND MOMENT FRAME LINKED TOGETHER BY RIGID DIAPHRAGMS. (deflection shown for total building forces)

DISPLACEMENTS IN FEET

Figure 4–2. Dual-system deformations.

tion of the R_w value is generally a simple process, for some buildings it may be complicated by unusual combinations of materials, height limitations, and special detailed system design requirements.

d. System limitations. System limitations involve building configuration, vertical and plan irregularities, combinations of systems, and height limits.

(1) *Configuration requirements. The* designer is required to designate the structure as either regular or irregular (SEAOC 1D5). Irregular features include, but are not limited to, those described in SEAOC Tables 1–E and l–F. The irregularity of a building should be obvious: the definitions given in the tables were developed only to meet a need for definite limits. The designer is not expected to make these calculations routinely, but only when needed to resolve doubts in marginal cases. Irregularities have certain consequences that are summarized below. It should be noted that where dynamic analysis is mentioned it is a general requirement, but most buildings are exempted under SEAOC 1D8.

(2) Vertical irregularities (SEAOC Table l-E).

(a) Stiffness. Note the exception of SEAOC lD5b(1). The presence of a stiffness irregularity requires dynamic analysis, except for buildings exempted under SEAOC 1D8.

(b) Weight. Note the exception of SEAOC 1D5b(l). The presence of a weight irregularity requires dynamic analysis, except for buildings exempted under SEAOC 1D8.

(c) Geometry. Geometric irregularities require dynamic analysis, except for buildings exempted under SEAOC 1D8.

(d) Discontinuities. In-plane discontinuities in buildings in Zones 2, 3, and 4 invoke the overturning requirements of SEAOC lE7b.

(e) Weak *stories,* Weak stories invoke the system limitations of SEAOC lD9a.

(3) *Plan irregularities* (SEAOC Table l-F).

(a) Torsion invokes the requirement for amplification of accidental torsion of SEAOC lE6d, the orthogonal effects of SEAOC lH1c, and, in Zones 3 and 4, the diaphragm requirements of SEAOC lH2j(4).

(b) Re-entrant corners invoke the diaphragm requirements of SEAOC lH2j(4) and (5).

(c) Diaphragm discontinuity in Zones 3 and 4 invokes the diaphragm requirement of SEAOC 1H2j(4).

(d) Out-of-plane offsets invoke, in Zones 2, 3, and 4, the overturning requirements of SEAOC lE7b and, in Zones 3 and 4, the diaphragm requirements of SEAOC lH2j(4).

(e) Nonparallel systems are subject to the requirements of SEAOC 1H1c concerning orthogonal effects.

(4) *Combinations of structural systems.* A building can utilize two or more systems in combination. Combinations may be horizontal or vertical or both. An example of a vertical combination is a building having shear walls in a base structure with a moment frame tower above. A horizontal combination means different systems in the two directions (e.g., moment frames in one direction and shear walls in the other). Each direction *(system) is* treated individually, with due regard for effects that result from interaction, such as torsional effects.

(a) Vertical *combinations.* Generally the R_w value is constant throughout the height of the building. When a change of structural system does occur (e.g., a steel frame on concrete shear walls, a wood box system on a concrete box system), the R_w value at the lower level cannot be greater than the R_w value of the system above, and special consideration must be given to the transition from one system to the other to ensure sufficient load transfer capacity and inelastic deformation capability. Refer to SEAOC 1E3a.

(b) Combinations in plan. The lateral load resisting system parallel to one axis may be different from that along the other axis (e.g., shear walls or braced frames in the north-south direction and moment frames in the east-west direction). There is an important restriction relating to bearing wall systems: if the structural system in one direction is a bearing wall system (category A in SEAOC Table l-G), then no matter what the system is in the other direction, the R_w used in that other direction may not be greater than the value prescribed for the bearing wall system. For example, a concrete bearing wall system in the north-south direction (system A2a, SEAOC Table l–G, $R_w = 6$) and a steel special moment resisting frame (SMRF) in the east-west direction (system C1a, SEAOC Table 1-G, $R_w = 12$) will require $R_w = 6$ in both directions. Refer to SEAOC 1E3b. In SEAOC, this applies to Seismic Zones 3 and 4. For this manual it will apply to all zones.

(5) *Height limits.* In Seismic Zones 3 and 4, some approved structural systems are restricted by height limitations. For example, buildings over 160 feet in height must be special moment resisting frames or dual systems of steel or concrete with SMRF. Refer to SEAOC Table 1–G for applicable height limits. Note the exceptions of SEAOC 1D7.

4-6. C-factor and the building period, T.

a. General. For a given value of the site coefficient, S, the factor C is dependent on the period of vibration, T, of the structure, as shown in SEAOC equation 1–2. Table 4-1 gives values of C as a function of T for four site profiles (S_1, S_2, S_3, and S_4. Figure 4-3 illustrates the relationship of C to T graphically. The plateau of the plot shown in figure 4-3 represents the maximum value of C, which is 2.75. The period of vibration is the time required for one complete cycle of oscillation of an elastic structure in a particular mode of vibration. The building period referred to in the seismic provisions of this manual is the fundamental period of vibration for each of the two translational directions of the building (the transverse and the longitudinal). The value of T may be determined by Method A or Method B. Method A may be used for all buildings, without qualification. There are limitations on the use of Method B.

PERIOD T Seconds	$C = 1.25S/T^{2/3}$			
	S_1=1.00	S_2= 1.20	S_3= 1.50	S_4= 2.00
0.25	2.75	2.75	2.75	2.75
0.30	2.75	2.75	2.75	2.75
0.35	2.53	2.75	2.75	2.75
0.40	2.31	2.75	2.75	2.75
0.45	2.13	2.56	2.75	2.75
0.50	1.99	2.39	2.75	2.75
0.60	1.76	2.11	2.64	2.75
0.70	1.59	1.90	2.38	2.75
0.80	1.45	1.74	2.18	2.75
0.90	1.34	1.61	2.01	2.68
1.00	1.25	1.50	1.88	2.50
1.10	1.17	1.41	1.76	2.35
1.241	1.11	1.33	1.66	2.21
1.30	1.05	*1.26*	1.57	2.10
1.40	1.00	1.20	1.50	2.00
1.50	0.95	1.14	1.43	1.91
1.75	0.86	1.03	1.29	1.72
2.00	0.79	0.94	1.18	1.57
2.50	0.68	0.81	1.01	1.35
3.00	0.60	0.72	0.90	1.20
3.50	0.54	0.65	0.81	1.08
4.00	0.49	0.59	0.74	0.99

Table 4–1. C us T for S_1, S_2, S_3, and S_4.

b. Method A. To calculate T by Method A, only the height of the building (h_n) and the value of C_t need be known for use of SEAOC equation 1–3. C_t is determined from the type of lateral force resisting system (e.g., steel moment frame, reinforced concrete moment frame, eccentric braced steel frame). An alternative for concrete or masonry shear wall systems may be used (SEAOC eq 1-4) if the shear wall dimensions are known.

c. *Low-rise buildings.* Short buildings have short periods of vibration. Without any calculation, it can be assumed that C equals 2.75 (the maximum value). Table 4-2 gives the value that T must exceed for C to be less than 2.75. If only Method A is used, table 4-3 may be used to estimate the height that the building must exceed to have C less than 2.75 for each of the values of C_t in SEAOC equation 1–3. For example, if a reinforced concrete special moment resisting frame building (C_t = 0.030) with an S-factor equal to 1.5 is 50 feet in height, by Method A, C equals 2.75 (table 4-3). However, if Method B is used and T is calculated to be greater than 0.56 second (table 4–2), C may be less than 2.75. But in no case can the value of C be less than 80 percent of 2.75 (that is, the minimum value of C is 2.2).

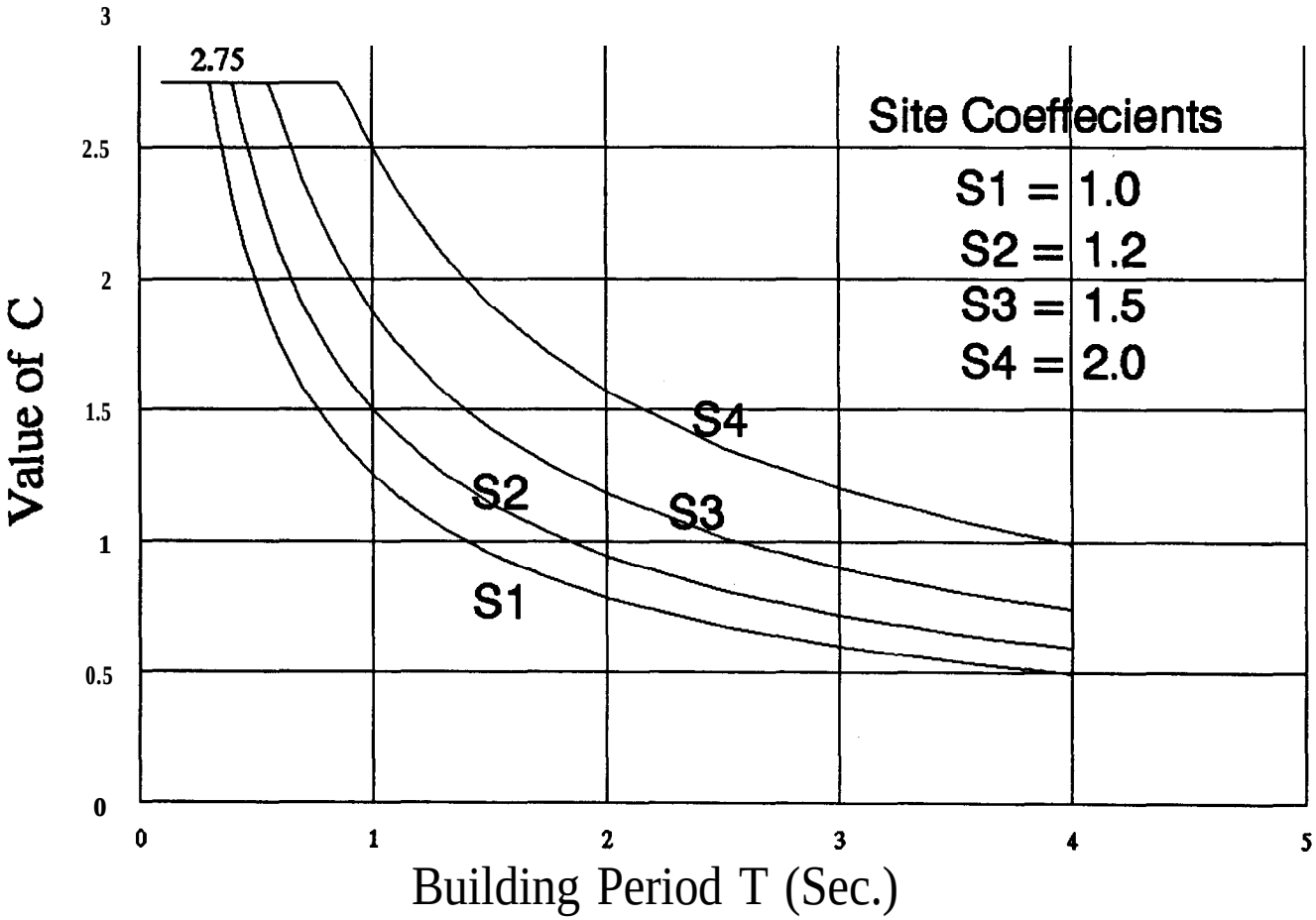

Figure 4-3. C vs T.

Soil Profile	S_1	S_2	S_3	S_4
Site Coefficient, S	1.0	1.2	1.5	2.0
Period T* (see)	0.31	0.40	0.56	0.87

*If the structure period is less than this value, C = 2.75. If it is greater, C <2.75. (See SEAOC Formula 1-2.)

Table 4-2. Value of T to be exceeded for C to be less than 2.75 when using Method A.

Site Coefficient, S		1.0	1.2	1.5	2.0
h_n** (ft)	C_t=0.035	18	26	40	72
	C_t=0.030	23	32	50	90
	C_t=0.020	38	54	85	150

**If height of building is less than this value, *C* = 2.75. If greater, C <2.75 (see SEAOC Formulas 1-2 and 1-3)

$$h_n = 0.207\ S^2 / C_t^{4/3}$$

Table 4-3. Height to be exceeded for C to be less than 2.75 when using Method A.

d. Method B. When SEAOC equation 1-5 is employed (see fig 4-4), the most difficult challenge is the determination of the story displacements, $delta_i$. The story weights, w_i, are relatively simple to estimate, and almost any set of story forces, f_i, can be used (for example, the inverted triangular distribution obtained from SEAOC equation 1-8 usually gives good results), but the corresponding lateral story displacements must be calculated. The basic objective must be a realistic approach to calculating the actual period—rather than the manipulation of the structural model so as to obtain a "calculated" but nonvalid long period and low base shear. For simple structures, the lateral displacements required for SEAOC equation 1-5 can be obtained by hand calculation methods. For

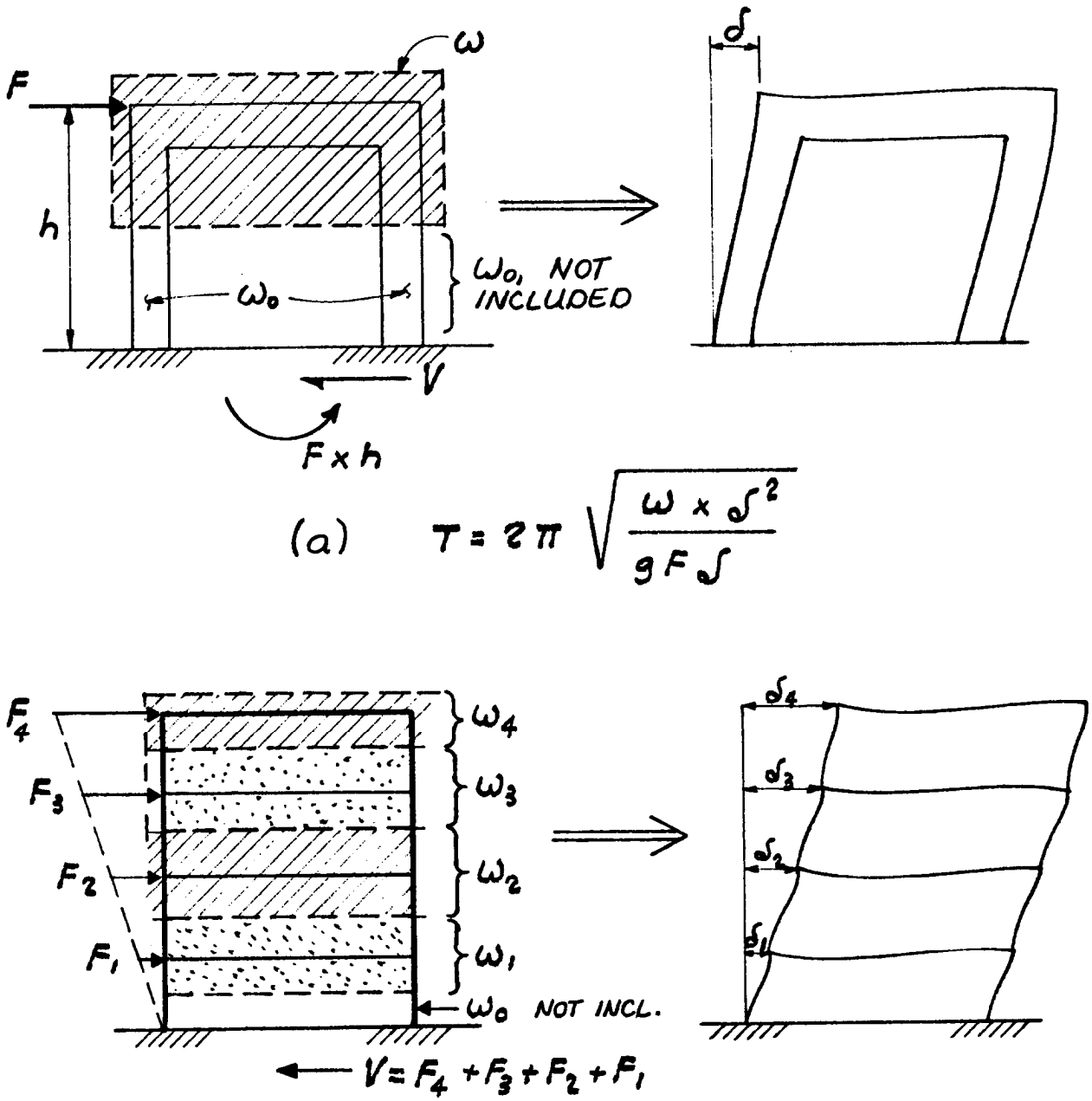

Figure 4-4 Period calculation by Method B.

T used for F_t will be consistent with the T used for the value of C.

(1) If the value of C is obtained by using T from Method A, then T from Method A will be used for calculating F_t.

(2) If the value of C is obtained by using T from Method B, without triggering the 80 percent limit in SEAOC 1E2b(2), then T from Method B will be used for calculating F_t.

(3) If the value of C is limited by 80 percent of the value obtained from Method A, then T will be determined by reversing SEAOC equation 1-2 to solve for the value of T:

$$T = (1.25\ S/C)^{3/2} \qquad \text{(eq 4-1)}$$

where C is 80 percent of the value obtained by using T from Method A. Note that the value of T will he greater than that obtained by Method A and less than that obtained by Method B.

4-7. Base **shear.** For most buildings, seismic design utilizes the static lateral force procedure, in which the dynamic response of the building is represented by an equivalent static lateral force. The base shear, the total lateral force on the building, is discussed in this paragraph; the distribution of this force over the height of the building is discussed below.

a Design base shear equation. The design base shear, V, may be expressed by the equation

$$V = C_s \times W \qquad \text{(eq 4-2)}$$

where

C_s = the design base shear coefficient = V/W

W = the weight of the building

The design base shear coefficient of SEAOC equation 1-1 may be written

$$C_s = (ZC/R_w)I \qquad \text{(eq 4-3)}$$

where

ZC = the site spectrum

R_w = the response modification factor

I = the importance factor

b. Site spectrum. The site spectrum is ZC, where Z is the zone factor. $C = 1.25\ S/T^{2/3}$, from SEAOC equation 1-2, where S = the site soil factor and T = the building period. Thus,

$$ZC = (1.25\ Z\ S/T^{2/3}) \qquad \text{(eq 4-4)}$$

Recognizing that a spectrum is a function of period, T, we call the quantity ZC, when plotted against period for a particular site with known values of Z and S, the site spectrum. A sample plot is shown in figure 4-5.

c. *Building design spectrum. The* site spectrum, ZC, would be used for design if the building were expected to remain elastic in the design event. Usually, however, we utilize the ductility and

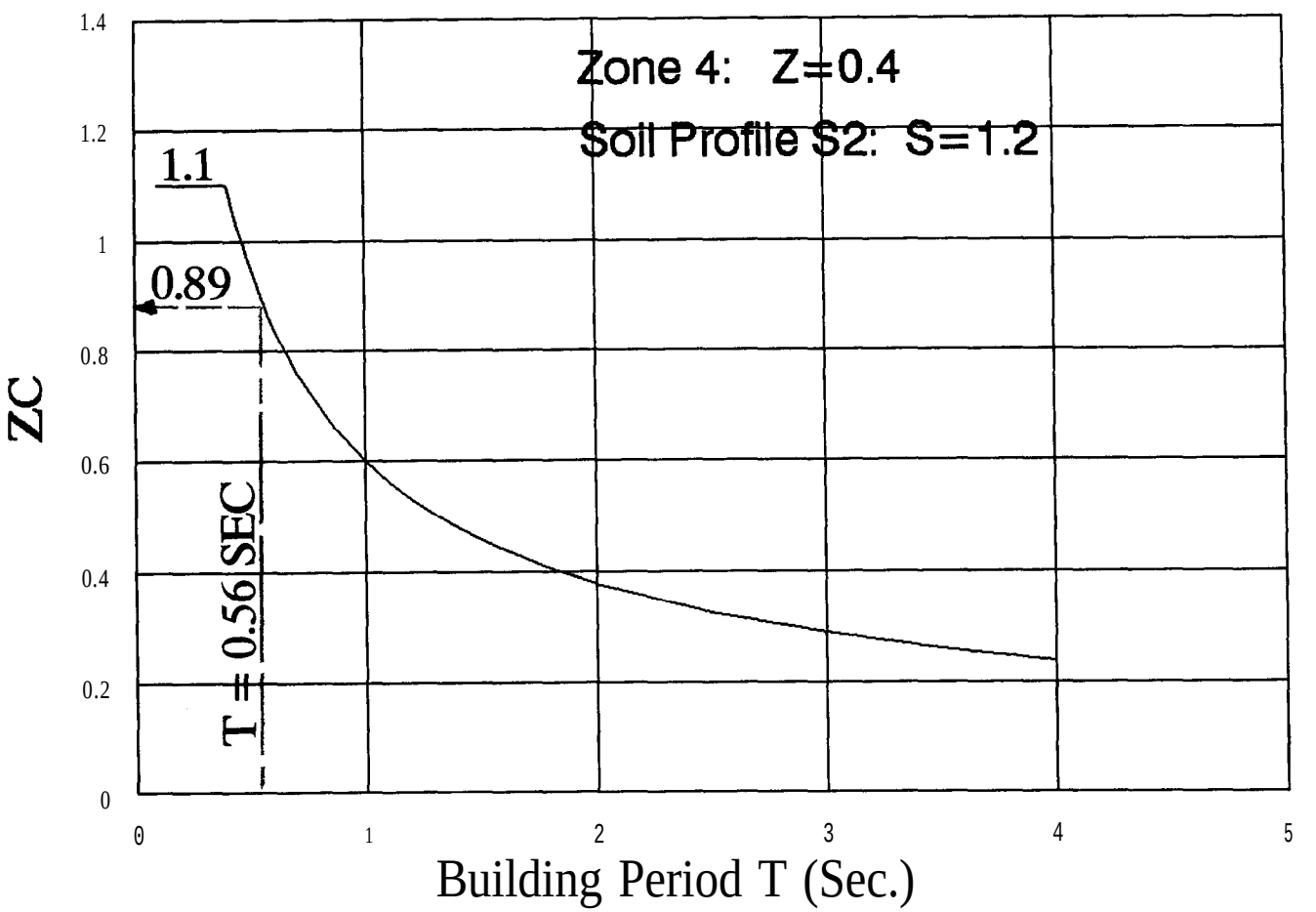

Figure 4-5. Sample site spectrum.

energy-absorbing characteristics of known structural systems to allow elastic design at a lower force level with the expectation of acceptable performance in the design event at a post-yield, nonlinear, inelastic level. This is accomplished by means of the response modification factor, R_w. The building base shear coefficient is ZC/R_w. The R_w-factor represents the ability of the structural system to dissipate energy without collapse while subjected to loads in excess of strength limits. The R_w values of SEAOC Table 1-G were selected by a consensus process based on past observations and judgment of the code-writing committee. They bring the base shear spectrum down to a level consistent with design forces used in past codes. When one of the basic structural systems is selected, the R_w-factor is determined and the building base shear coefficient (ZC/R_w) can be plotted against period. Figure 4-6 is a sample building design spectrum.

d. Design base shear. To develop a trial design for a particular structure, create a building design spectrum for the chosen system characterized by R_w. The period, T, of this structure is calculated, and for that value of T, the building design spectrum gives a base shear coefficient of ZC/R_w. For example, in figure 4-6, for T= 0.56, ZC/R_w = 0.11. The design base shear is determined from SEAOC equation 1-1, which may be written (ZC/R_w)IW. The value of the factor I is determined from the occupancy categories of SEAOC Table l–C. The values range from 1.0 to 1.25. Examples of various occupancy categories are given in chapter 3. When there is some doubt regarding the proper value of the I-factor, the decision will be made by the Agency Proponent. The factor W is the weight of the building as defined in SEAOC 1C and discussed in the following paragraph.

e. *Weight.* W, the total dead load and applicable portions of other loads, represents the total mass of the building. It includes the weight of the structural slabs, beams, columns, and walls, as well as nonstructural components such as partitions, ceilings, floor topping, roofing, fireproofing material, and fixed electrical and mechanical equipment. When partition loads are included in the design, their estimated weights will be used, but the value will not be less than 10 pounds per square foot of floor space, Miscellaneous items such as ducts, typical piping, and conduits can be covered by an additional 1 or 2 pounds per square foot. In storage areas, 25 percent of the design live

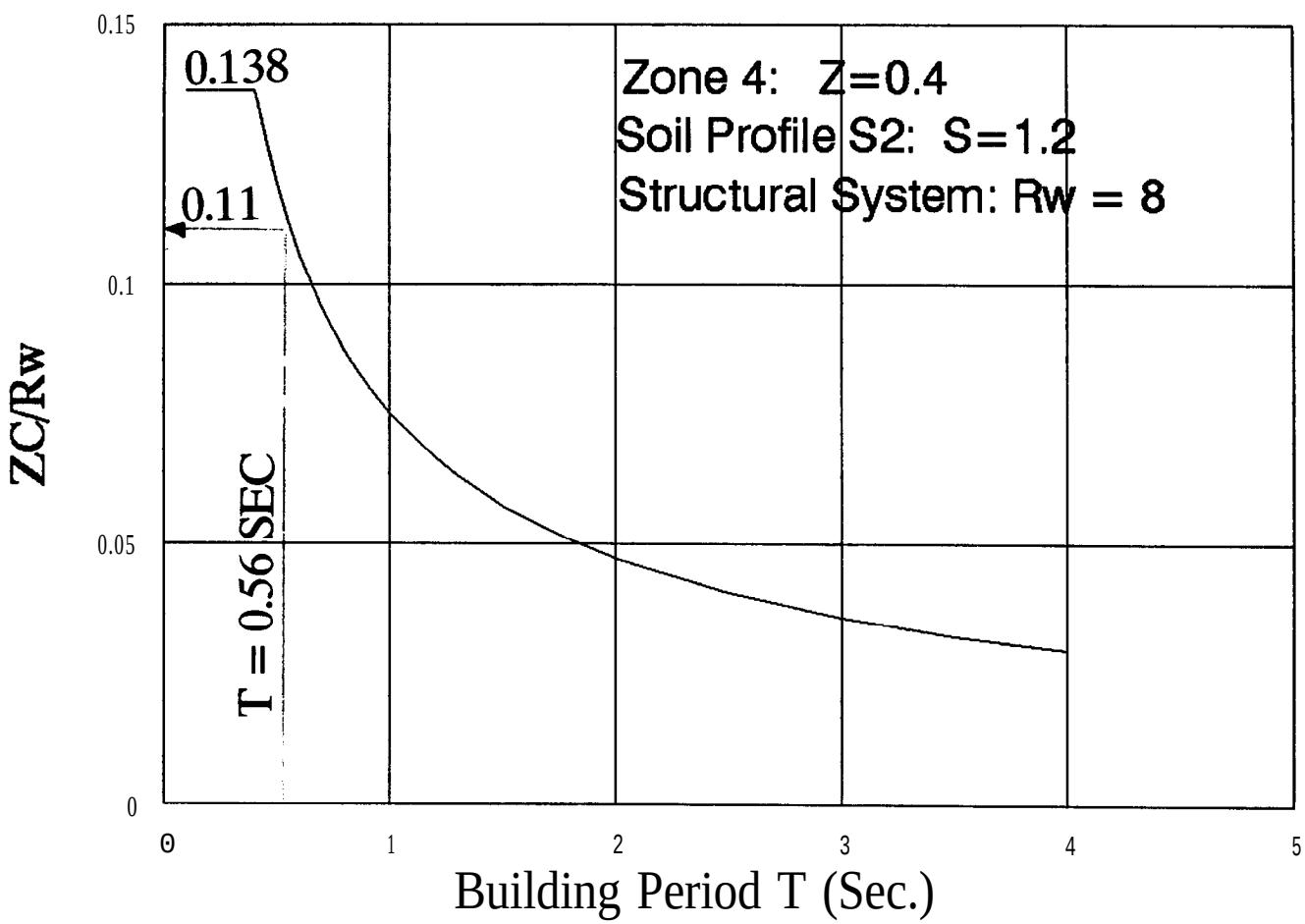

Figure 4-6. Sample building design spectrum.

load shall reincluded in the seismic weight W. In areas of heavy snow loads, some or all of the design snow load must be included. At the initial stage of design, the estimated weights of the structural members will be used. After the final sizes of structural members are selected, the actual weights must be compared with the estimated weights. In addition to determining the overall weight W, the designer must determine tributary weights that are to be assigned to each floor, and also how these are to be distributed horizontally in the plan of the floor. Therefore, the calculations for W must be done in an orderly manner so that these tributary weights and their plan distributions can be accounted for.

(1) *Vertical distribution.* For vertical distribution, the weight w_x that contributes to story level x is calculated separately for each floor (refer to SEAOC 1E4). This generally includes the weight of the complete floor system, plus one-half the weight of the story walls and columns above the floor level and one-half of the weight of the story walls and columns below the floor level. If partitions are laterally supported top and bottom, their weight is divided between the two floor levels; however, if the partitions are freestanding, the total weight is included with the supporting floor level. Note that this discussion relates to the building as a whole: diaphragms are designed on a different basis.

(2) *Horizontal distribution. The horizontal dis*tribution of weight at each floor level is required in order to calculate the center of mass (SEAOC 1E5) and the diaphragm forces (SEAOC lH2j). The weight of the diaphragm and the elements tributary thereto (designated W_{px} in SEAOC eq 1-11) include the floor system, tributary weights of walls and partitions, and other elements attached to the diaphragm. When designing diaphragms, it is assumed that lateral forces due to the weights of the shear walls stay in plane and need not be included in the analysis of the diaphragm that acts in the same direction. If, however, there is a vertical discontinuity in the vertical elements of the lateral force resisting system (e.g., if a wall does not extend to the base but stops at an upper level or has a reduction in stiffness), then the diaphragm is required to redistribute lateral forces. See SEAOC lH2j(l)(b). The horizontal distribution generally consists of a combination of uniform and concentrated weights along the length of the floor plus concentrated weights tributary to the shear walls at the shear walls (see fig 4-7).

(3) *Summation. The* sum of the horizontal distribution of weights (in each direction of motion) will be equal to the story weight, and the sum of the story weights will equal the total weight W of the building, except that the bottom half of the first story generally distributes itself directly to the base and is not required to be included in the weight W (fig 4-3).

f. Snow loads. When the ground snow load is 30 psf or less, the effects of snow will not be combined with the seismic effects. When the ground snow load is greater than 30 psf, the effects of snow will be combined with the seismic effects. When snow and seismic effects are combined, 25 percent of the balanced snow load (i.e., 25% of the flat or sloped roof snow load) will be included. Unbalanced loads, drift loads, sliding snow, and rain-on-snow need not be included. For the seismic provisions, snow is considered an additional weight.

g. *Wind loads.* When wind governs, structures are ordinarily designed to remain elastic with stresses at an allowable level. Where seismic loads govern, structures are designed with ductile systems and increased loads on nonductile elements; the structures are expected to survive actual earthquake forces about three times as large as the design forces. This difference in approach reflects the relatively longer return period of the design earthquake compared with the design wind; accordingly, wind and seismic design are not comparable. The question of which loading governs arises in zones of low seismicity. As a rule, seismic loading should not be ignored unless the seismic base shear is less than one-third of the total wind force on the building.

h. The quantity 3($R_{w/8}$) The building base shear coefficient (ZC/R_w) represents a force level for design, using ductile systems that are expected to have acceptable performance. As discussed in paragraph c above, the building base shear coefficient is obtained from the site spectrum ZC by means of the reduction factor R_w. During the earthquake, the building behaves in an inelastic manner such that the period lengthens, damping increases, other dynamic characteristics change, and the building will be subjected to forces less than those represented by ZC. The code implies that the forces will be reduced to about 3/8 ZC. Thus, the level of force and deflection that should be expected in the earthquake is approximately $3R_w/8$ times design or three times that used in the design of a basic frame building with an $R_w = 8$. For components and connections that do not have the ductility of the system represented by R_w, there is a trade of strength for ductility such components and connections are designed to have sufficient strength to withstand a higher force level. The SEAOC requirement is to modify the design loads

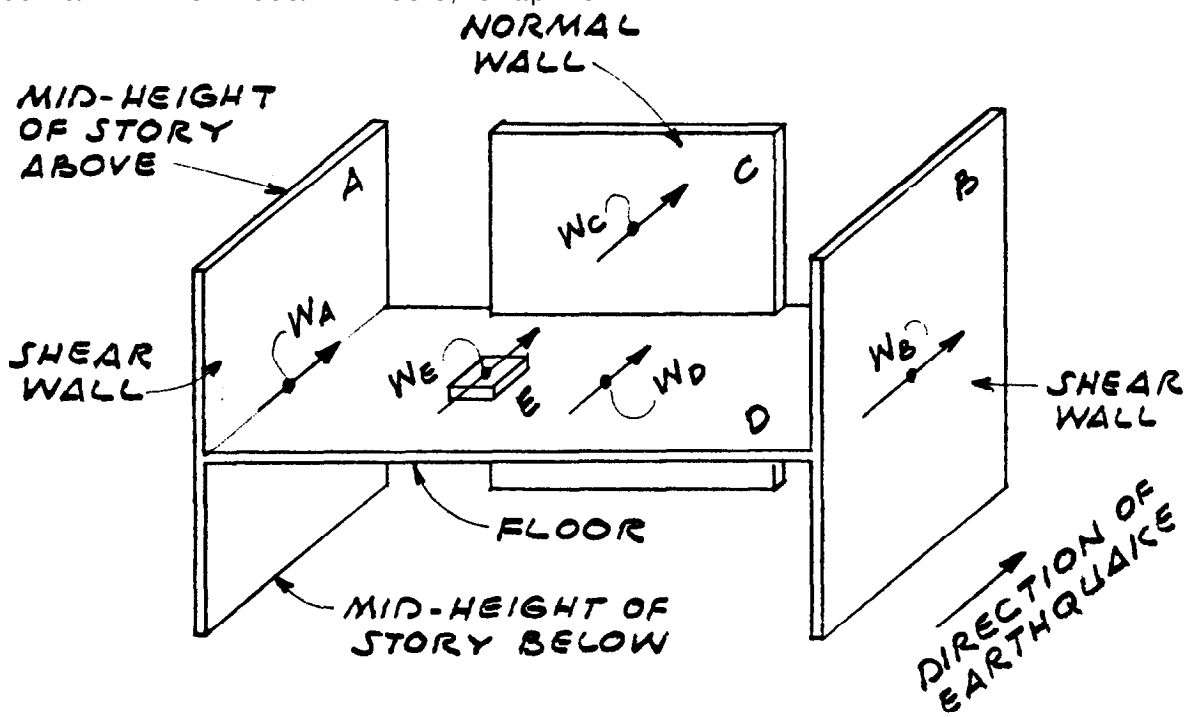

STORY WEIGHT FOR CALCULATION OF LATERAL FORCES:

$$W_x = \text{WALLS} + \text{FLOOR} + \text{EQUIPMENT}$$

$$= W_A + W_B + W_C + W_D + W_E$$

WEIGHT FOR DESIGN OF DIAPHRAGM

$$W_{px} = \text{NORMAL WALLS} + \text{FLOOR} + \text{EQUIPMENT}$$

$$= W_C + W_D + W_E$$

NOTE:

FLOOR WEIGHT W_D, INCLUDES FLOOR STRUCTURE, SUSPENDED CEILING, MECHANICAL EQUIPMENT (UNLESS TAKEN SEPARATELY AS W_E), AND (IF APPLICABLE) 20 PSF FOR PARTITIONS.

Figure 4-7. Tributary weights at a story.

by a factor that is three times $R_w/8$. There are several areas in which $3(R_w/8)$ should be considered.

(1) Defections. The story drift limits of SEAOC 1E8 are design requirements for seismic systems, but the designer should be aware that in an earthquake drifts, of $3(R_w/8)$ times the calculated drift can be expected. This is recognized in the requirements for deformation compatibility (SEAOC lH2d) and building separations (SEAOC 1H21), and it should be recognized when detailing nonstructural items such as windows.

(2) *Design forces. The* $3(R_w/8)$-factor appears as a multiplier in the load combinations for discontinuous elements subject to overturning (SEAOC lE7b), steel columns in frames (SEAOC 4D1), and in the design forces for exempted braced frames in low steel buildings (SEAOC 4G4).

(3) Connections. The $3(R_w/8)$-factor appears as a multiplier on the design forces for certain connections, for example, girder-column connections of steel ordinary moment frames (SEAOC 4E) and special moment frames (SEAOC 4F1M2)), and the braces and related elements of light framed wall systems (SEAOC 4I3). The requirements for connections of bracing in braced frames (SEAOC

4G2(a) depend on whether or not the higher force level is used.

(4) *Other cases.* The $3(R_w/8)$-factor appears in other detailed requirements related to the basic categories in the foregoing paragraphs; for example, in eccentric braced frames, the limitation on the rotation of the link beam is tied to frame deflection at $3(R_w/8)$ times the drift due to the prescribed seismic forces (SEAOC 4H11b). In some cases, basic requirements are relaxed if the higher force level is provided for. Requirements concerning girder-column joint restraint are modified in SEAOC 4F7a(2)(d) and 4F7b(1)(a). The basic requirement of SEAOC 4G1c relating to the distribution of tension and compression braces in a line of bracing is modified by an exception to the requirement when the compression bracing acting alone has the strength for the higher force level.

4-8. Direction of forces. In general, the horizontal design earthquake forces are applied nonconcurrently in the direction of each of the main axes of the structure (SEAOC 1E1). In some cases a more severe condition may occur when the forces are applied in a horizontal direction not parallel to the main axes. The corner column of a building with a perimeter frame is an example of such an element. For some elements of a building the effects of concurrent motion about both principal axes should be investigated. These orthogonal effects are covered by SEAOC 1H1c. In the case of irregular buildings, the critical directions are determined by a process of iteration. The analysis is begun with any convenient pair of directions and is repeated until the critical directions are found.

a. Buildings. An independent design about each of the principal axes will generally provide adequate resistance for forces applied in any direction. Special consideration must be made at outside corners and re-entrant corners for the vulnerable effects of concurrent motions about both principal axes.

b. Structures other than buildings. For nonbuilding structures circular in plan, such as tanks, towers, and stacks, the design should be equally resistant in all directions. For four-legged structures substantially square in plan, 70 percent of the prescribed forces should be applied concurrently in the directions of the two principal axes, especially for purposes of designing for overturning effects on columns and foundations.

4-9. Distribution of forces. The total lateral force is distributed throughout the building in a manner that simulates the behavior of the building during an earthquake.

a. Path of forces. All of the inertia forces originating from the masses on and within the structure must be transmitted from their source to the base of the structure (see figs 4-8 and 4-9).

(1) Forces normal to the plane of a wall must be transferred either vertically to the floors above and below or horizontally to columns that are capable of transferring the forces vertically to the floors above and below. Normal walls are treated as elements of structures. The design forces will be governed by SEAOC equation 1-10.

(2) Diaphragms acting as horizontal beams must transfer inertia forces to the frames and/or shear walls. The design forces will be governed by SEAOC equation 1-11. The distribution of these forces is discussed in paragraph *d.*

(3) Frames and shear walls must transfer forces contributed from the diaphragms as well as their own inertia forces to the foundations. The design forces will be governed by SEAOC equations 1-1, 1–6, and 1–8.

(4) Forces applied to the foundations by the shear walls and frames must be transmitted into the ground. See chapter 10 for design of foundations.

(5) Connections between all elements must be capable of transferring the applied forces from one element to another. Special design requirements for connections are reviewed in paragraph 4–13.

b. Vertical distribution of base shear. The total lateral force on the building is resisted by a shear and a moment at the base. Instead of calculating the forces and finding the base shear as the sum of these forces, the base shear is calculated (by SEAOC eq l-l) and this force is distributed over the height of the building (by SEAOC eq 1-6. The application of seismic forces to a building is shown in figure 4–10. A sample format for determining story forces is shown in table 4–4. The procedure given is based on the assumption of a uniform building and is aimed at a reasonable evaluation of the relative maximum story shear (e.g., column (9) in table 4-4) envelope that will occur.

(1) *Regular buildings with T equal to or less than 0.7 second.* When the period of the building is equal to or less than 0.7 second, F_t will be equal to zero. Then SEAOC equation 1-8, the vertical distribution equation, will reduce to the following:

$$F_x = \frac{w_x h_x}{\sum_{i=1}^{n} w_i h_i} V \qquad \text{(eq 4-5)}$$

The story force F_x is distributed horizontally at level x in proportion to the weight distribution at that level (refer to fig 4–10).

(2) *Regular building with T greater than 0.7 second.* When the period" of the building is greater

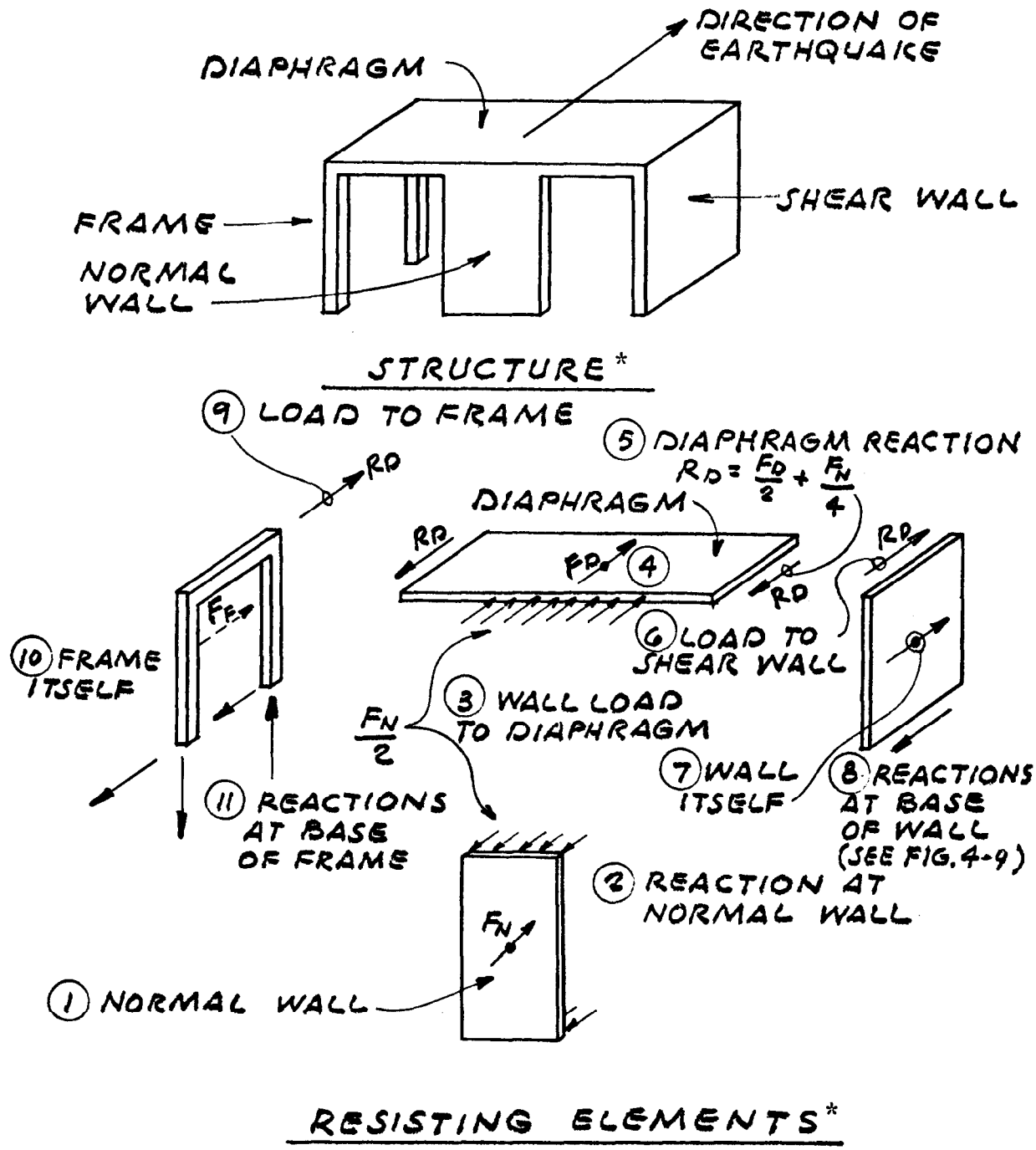

*Note: Example shows flexible diaphragm. For rigid diaphragm, relative rigidities and torsion will be considered.

Figure 4-8. *Path of forces.*

than 0.7 second, a lateral force, F_t, is applied to the top level of the structure, usually the roof. F_t equals 0.7T times the lateral force V, as determined by SEAOC equation 1-7. F_t will vary from 5 percent (T = 0.7 second) to 25 percent (T = 3.6 seconds) of the lateral force V. The value of T is discussed in paragraph 4-6g. The remaining portion of the force (V - F_t is distributed throughout the height of the structure in accordance with SEAOC equation 1-8. The total applied force at the top level of the structure will be $F_t + F_n$, where F_n is the value of F obtained from SEAOC equation 1-8 for the top level n (see fig 4-10).

(3) *Additional comments on F_t* The rationale for F_t is based on the following assumption: For buildings with periods greater than 0.7 second (e.g., tall and/or flexible structures), the combined mode shape may depart from the straight-line

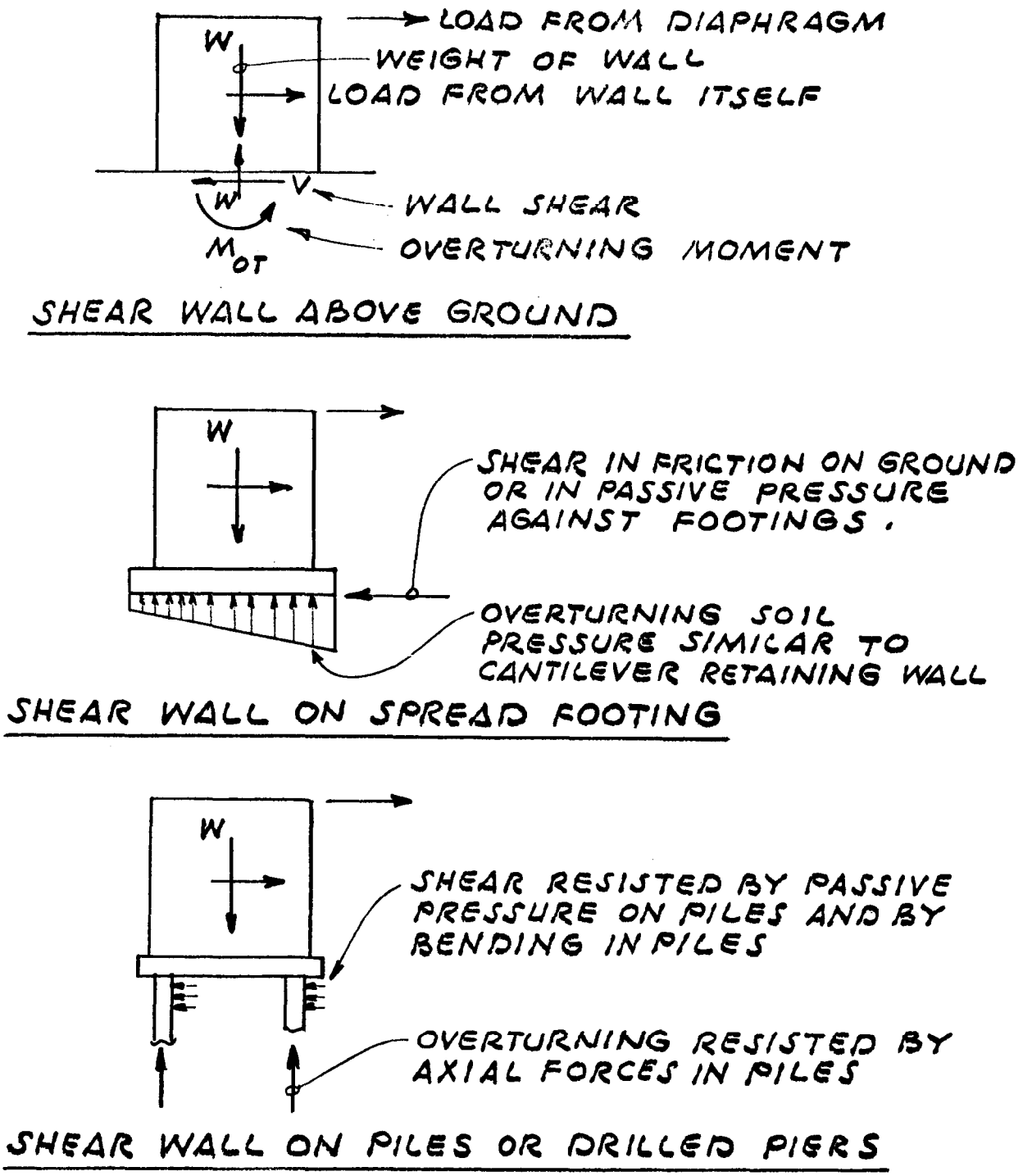

Figure 4-9. Transfer of forces to ground

assumption (eq 4-3), and the effects of higher modes of vibration may become more significant. To account for this, a greater portion of the lateral force is assigned to the top of the structure by use of F_t from SEAOC equation 1-7. This additional force is intended to increase the shear force and the equivalent story acceleration at the upper stories; however, in some cases the strict application of F_t may result in excessive forces for roof diaphragms and excessive overturning moments at foundations. To lessen these effects for diaphragms, SEAOC 1H2j places a limit of $0.75ZIw_{px}$ on the required diaphragm force. A better approximation of the force distribution may be made by

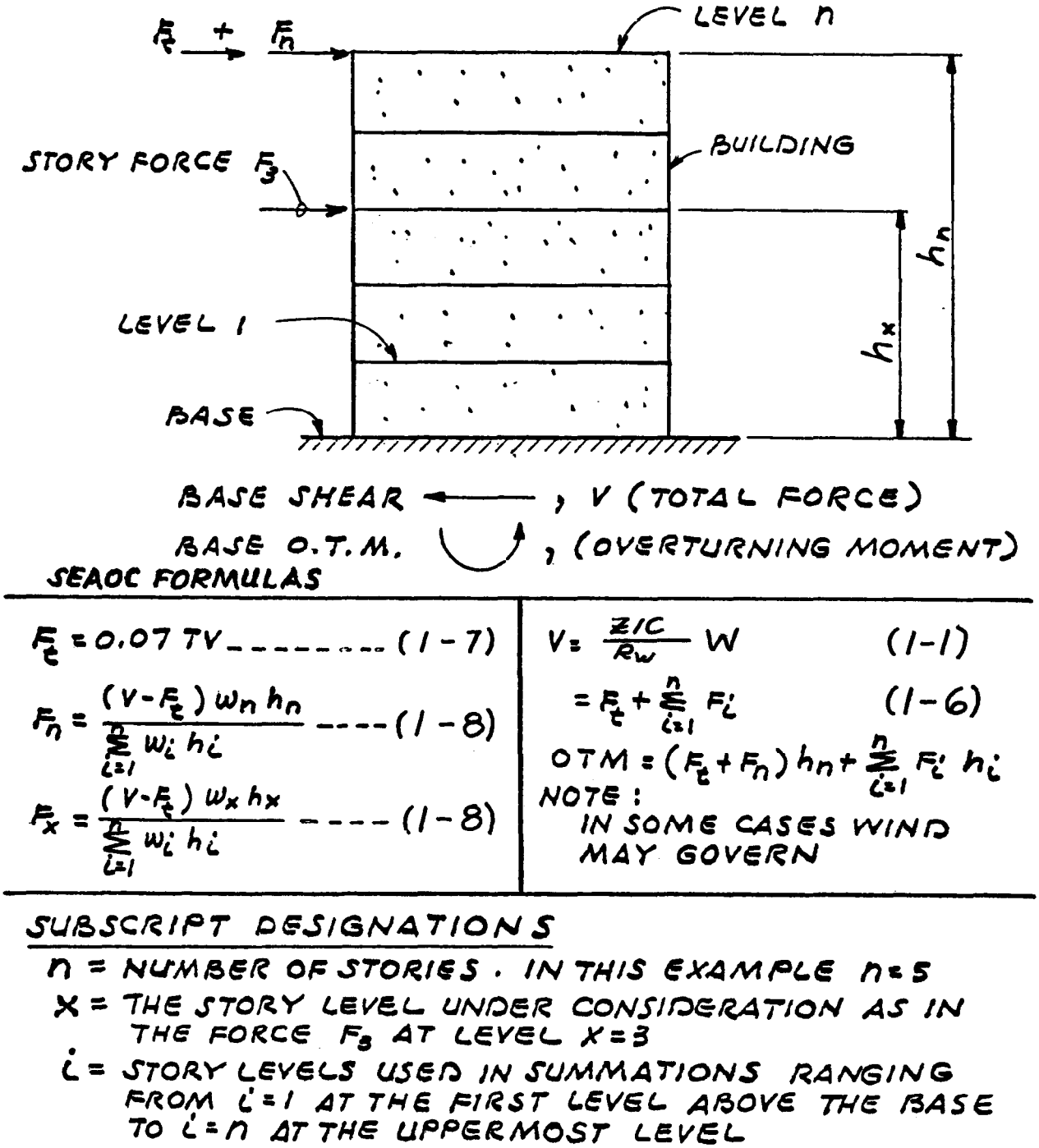

Figure 4-10. Seismic forces.

using the principles of dynamics, which include the significant modes of vibration (see below).

(4) *Irregular structures.* For structures with irregular configuration or framing systems, the lateral force distribution procedures for uniform buildings that are described above and prescribed by SEAOC equations 1–7 and 1-8 are not applicable; lateral force must be distributed by a rational procedure that takes into account the stiffness properties of the lateral force resisting system, the mass distribution, and the principles of dynamics.

c. Overturning. The overturning effects are determined by applying the story forces obtained from SEAOC equations 1-7 and 1-8, as illustrated in table 4-4 and figure 4–10. The structure must resist these forces in accordance with SEAOC 1E7. Other loading provisions related to overturning moment effects are SEAOC 1H1b, 1J4, 3B1, and 4D1b. In moment resistant frame structures, the overturning is resisted by a combination of coupled

Building: 7-story building Direction Longitudinal (N-S)
$Z = 0.4$; $I = 1.0$; $R_W = 12$; $S = 1.5$; $h = 65.7$; $W = 10{,}540$
$C_t = 0.030$; $T_A = 0.69$; $CA = 2.41$; $0.8C_A = 1.93$; $T_B = 0.76$; $C_B = 2.26$
$C = 2.26$; $T = 0.76$; $V = (ZIC/R_W)W = 0.075\ W = 791$.
$F_t = 0.07\ TV = 0.054\ V$; $F_x = (V-F_t)wh/\Sigma wh = 0.946\ V(wh/\Sigma wh)$

Level (1)	h ft. (2)	Ah ft. (3)	w kips (4)	Σ w (5)	(2)x(4) wh (6)	w h / Σ wh (7)	F kips (8)	Σ (8) kips (9)	(3)x(9) Δ OTM kip-ft (10)	Δ (10) OTM kip-ft (11)	(9)+(5) $F_t + \Sigma F_i$ / Σw_i (12)*
							F_t=43				
Roof	65.7		1,410		92/637	0.228	171				
		8.7		1,410				214	1,862		0.152
7	57.0		1,460		83,220	0.205	153			1,862	
		8.7		2,870				367	3,193		0.128
6	48.3		1,460		70/518	0.174	130			5/055	
		8.7		4/330				497	4324		0.115
5	39.6		1,460		57,816	0.142	106			9,379	
		8.7		5/790				603	5/246		0.104
4	30.9		1,460		45,114	0.111	83			14,625	
		8.7		7,250				686	5,968		0.095
3	22.2		1,460		32,412	0.080	60			20,593	
		8.7		8,710				746	6/490		0.086
2	13.5		1,830		24,705	0.061	46			27,083	
		13.5		10,540				792	10/692		0.075
GRD.	0									37,775**	
Σ			10,540		406,422	1.001	792		37,775		

*For use in SEAOC Eq 1-11.
**For foundation overturning moments, this value may be reduced by 2825 kip-ft (43x65.7) when F_t is neglected. See SEAOC 1J4.

Table 4-4. Force distribution

axial column forces and bending moments in the column. In shear wall buildings, the overturning moments are resisted by flexure in the shear walls. The application of the statis design forces can create an apparent overturning instability condition that is difficult to reconcile with observations in earthquakes where actual loadings are cyclic and dynamic. SEAOC 1J allows the force F_t to be omitted for determining overturning at the foundation-soil interface.

d. Horizontal distribution of story shear.

(1) *Horizontal forces.* At each level the diaphragm distributes lateral forces from above to shear walls and frames, below. The nature of the

distribution depends on the relative rigidities of the diaphragm and the resisting elements below. To account for uncertainties in the locations and distribution of weights that contribute to the earthquake forces, the calculated center of mass will be assumed to be shifted by five percent of the building dimension in either direction (SEAOC 1E5b). For rigid diaphragms, an additional eccentricity may be required.

(2) *Horizontal torsional moments.* For rigid diaphragms (i.e., not flexible per SEAOC lE6a), where the center of rigidity of the vertical elements of the lateral force resisting system (frames or shear walls) is not coincident with the center of mass, provisions must be made for this eccentricity plus an additional "accidental" eccentricity of 5 to 15 percent of the building dimension which is intended to account for uncertainties. For a symmetrical building, a minimum eccentricity of 5 percent of the building dimension perpendicular to the direction of force is required. When torsional irregularities exist, an amplification factor determined by SEAOC equation 1–9 is applied to the 5 percent eccentricity (see chapter 5).

(3) *Distribution between shear walls and frames (dual systems).* When a dual bracing system is used (SEAOC Table l–G, Category D), a rigidity analysis must be made to determine the interaction between the walls and the frames.

e. Orthogonal effects. SEAOC 1H1c refers to the effects on a structure due to forces induced in directions not parallel to the direction of resistance under consideration. It does not refer to torsion in general; that is covered by SEAOC 1E6. Orthogonal effects are involved in the following case—

(1) The vertical elements of the lateral force resisting system are not parallel to or not symmetric about the major orthogonal axes of the lateral force resisting system (plan irregularity Type E of SEAOC Table l-F).

(2) The structure has torsional irregularities (Type A of SEAOC Table l-F) for both major axes.

(3) An element is common to two intersecting systems. The most common example is the corner column of a perimeter frame; the maximum overturning force on the column occurs when the direction of force is oblique to the main axes of the frame.

f. Participating elements. Elements that are not designated as lateral force resisting elements may nevertheless participate in resisting lateral forces. All gravity load carrying elements not designed to be part of the lateral force resisting system must be analyzed to determine if they are compatible with the lateral force resisting system (see SEAOC 1H2d). Any element that is not strong enough to resist the forces that it attracts or the interstory drifts that occur will be damaged unless it is isolated from the lateral force resisting system.

4-10. Vertical seismic forces. Vertical components of ground motion are not usually calculated. Stresses are considered to fall within the usual one-third increase that is allowed for earthquake effects. In cases where gravity load is depended on for stability, and where seismic load tends to reduce the total load, there are special provisions for using reduced dead loads. Such provisions include the 0.85 factor for dead load in SEAOC 1H1b. These reduced loads apply to axial compression due to gravity in concrete columns and walls when subjected to seismic overturning moments and uplift forces and to beam bending moments due to gravity when combined with seismic bending moments in the opposite direction (i.e., bending moment reversal).

a. Horizontal elements. In Zones *3* and *4,* special considerations must be given to the effects of vertical accelerations on horizontal prestressed elements (especially those with draped prestressing) and horizontal cantilevers (SEAOC 1E10). For investigating the effects of vertical accelerations on horizontal prestressed elements an approved procedure is to rely on only 50 percent of the dead load as a minimum gravity load when applying the lateral forces. Horizontal cantilever elements should be checked for the capacity of the elements to resist a net upward force of 20 percent of the dead load.

b. Hold-downs. In Seismic Zones 3 and 4, the design of hold-downs to resist overturning moments and uplift forces will use a maximum of 0.85 of the dead load for gravity resistance. The load provisions related to hold-down resistance are in SEAOC, 1E7, 1H1b, 3B1, and 4D1b.

4-11. Detailed design requirements. SEAOC 1H is intended to cover a variety of concerns other than the determination of lateral forces on the building as a whole (SEAOC 1E) and the parts of the building (SEAOC lG). These topics are discussed at appropriate places in the manual. Some requirements and details for satisfactory performance under earthquake conditions are enumerated and discussed in the following paragraphs. Also, refer to the discussion of damage control features in chapter 2.

a. Separation of structures (SEAOC 1H21). In past earthquakes the mutual hammering received by buildings in close proximity to one another has caused significant damage. The simplest way to prevent damage is to provide sufficient clearance so that free motion of the two structures will

result. The motion to be provided for is produced partly by the deflections of the structures themselves and partly by the rocking or settling of foundations. The gap must equal the sum of the total deflections from the base of the two buildings to the top of the lower building.

(1) In the case of a normal building less than 80 feet in height using concrete or masonry shear walls, the gap shall be not less than the arbitrary rule of 1 inch for the first 20 feet of height above the ground plus ½ inch for each 10 feet of additional height.

(2) For higher or more flexible buildings, the gap or seismic joint between the structures should be based on $3(R_w/8)$ times the sum of the deflections determined from the required (prescribed) lateral forces. If the design of the foundation is such that rotation is expected to occur at the base due to rocking or due to settlement of foundations, this additional deflection (as determined by rational methods) will be included.

b. Seismic joints. Junctures between distinct parts of buildings, such as the intersection of a wing of a building with the main portion, are often designed with flexible joints that allow relative movement. When this is done, each part of the building must be considered as a separate structure that has its own independent bracing system. The criteria for separation of buildings in paragraph a above will apply to seismic joints for parts of buildings. Seismic joint coverages will be made flexible, waterproof, and architecturally acceptable.

c. Elements that connect buildings. Certain types of structures commonly found in industrial installations are tied together at or near their tops by connecting parts such as piping, conveyors, and ducts. The support of these elements will allow for the relative movement between buildings.

d. Bridges between buildings. Clusters of buildings are often connected by bridges. In most cases it would not be economically feasible to make bridges sufficiently rigid to force both buildings to vibrate together. A sliding joint at one or both ends of the bridge can usually be installed.

e. *Stairways.* Concrete stairways often suffer seismic damage because they act like struts between the connected floors. This damage can be avoided by anchoring the stair structure at the upper end and providing a slip joint at the lower end of each stairway, or by tying stairways to stairway shear walls.

f. "Short column" effects. Whenever the lateral deflection of any column is restrained, when full-height deflections were assumed in the analysis, it will carry a larger portion of the lateral forces than assumed. In past earthquakes, column failures have frequently been inadvertently caused by the stiffening (shortening) effect of deep spandrels, stairways, partial-height filler walls, or intermediate bracing members. Unless considered in the analysis, such stiffening effects will be eliminated by proper detailing for adequate isolation at the junction of the column and the resisting elements.

4-12. Deformation requirements. Deformations will be governed by the provisions for story drift limitations (SEAOC 1E8), building separations (SEAOC 1H21, and para 4-ha), deformation compatibility (SEAOC 1H2d), diaphragm deformation (SEAOC 1H2j and chap 6, and exterior elements (SEAOC 1Hd(2)).

a. Elements to be included. For determining compliance with the deformation provisions, only structural elements should be considered in the stiffness calculations. It is unconservative to include the stiffness participation of nonstructural elements without substantiated data. This is in contrast with the assumptions used in the period calculation for obtaining values for C. Thus, it is not uncommon to have one set of stiffness assumptions for calculating the total design lateral forces and another set of stiffness assumptions for calculating the design lateral displacements. It is acceptable to calculate the lateral deformations based on lateral forces corresponding to a building period calculated by Method B, even if the resulting forces are smaller than 80 percent of the lateral forces of Method A specified in SEAOC 1E2. An example is given in paragraph 4-6 *f*

b. P-delta effects. The secondary effects of lateral deformation (P-delta effects), when significant, must be investigated to ensure lateral stability Criteria for inclusion of P-delta effects are prescribed in SEAOC 1E9.

4-13. Connections between elements. The various elements of the lateral force resisting system will be connected to each other by positive means so as to make the load path complete, and the connections will be adequate and consistent with the basic assumptions and distribution of forces.

a. Continuity.

(1) *Portions of structures.* When a building consists of two or more portions, such as larger/smaller or center/wings, the portions will be tied as prescribed in SEAOC 1H2e(l).

(2) *Horizontal capacity.* At supports for beams, girders, and trusses, a horizontal capacity will be provided as prescribed in SEAOC 1H2e(2).

(3) *Collectors.* Collector elements will be provided where needed to transfer forces from a point of origin at one place in the building to a point of

resistance in another place, as prescribed in SEAOC 1H2f.

b. Forces to be considered. Joints and connections will be designed for forces consistent with all possible combinations of loadings. In addition to the prescribed forces and load combinations, the designer will consider additional load effects due to settlement, shrinkage, creep, and thermal expansion, temporary erection loads, and differential settlements. Rotational effects or torsions resulting from eccentric connections must be considered. In general, elements and members should be detailed so that torsion and secondary moments are held to a minimum at the connections,

c. *The strength of connections.*

(1) Connections between diaphragms and vertical elements of the lateral force resisting system. Diaphragm shears, based on SEAOC equation 1–11, will be transferred to shear walls and frames by means of appropriate connectors, such as bolts, embedded bolts, and welded studs,

(2) Connections within systems. Members of the horizontal and vertical systems (diaphragms, shear walls, and frames) will be connected as provided at appropriate places in this manual.

(3) Special loads. In some cases, design forces for connections are increased by a multiplier. The forces obtained from analysis based on SEAOC equation l–l, 1–10, or 1–11, are multiplied by a particular number or by the quantity $3(R_w/8)$. The purpose of these multipliers is to ensure that the capacity of the building is governed by its elements, not by its connections. In these cases, the intention is to provide greater strength in the connection to offset its lack of ductility compared with the resisting system, which has an assigned R_w value.

d. Special elements. Special design requirements are included in SEAOC 1H for exterior panels (SEAOC 1H2d(2)), anchorage of concrete or masonry walls (SEAOC 1H2h), and wood diaphragms used for lateral support of concrete or masonry walls (SEAOC 1H2j(3)).

e. Details. Details of connections will admit to a rational analysis in accordance with well-established principles of mechanics.

4-14. Diaphragms. Diaphragms will be designed to resist forces prescribed by SEAOC 1H2j. Not only does a diaphragm transfer forces, but it must resist the inertia forces of its own weight, w_{PX}. The design forces, given by SEAOC equation 1–11, are different from building story forces because diaphragms tend to respond as sub-elements within the building structure. Diaphragms are discussed in detail in chapter 5.

4-15. Elements and components. Parts of buildings other than the major horizontal and vertical elements of the lateral force resisting system will be designed to resist forces prescribed by SEAOC 1G and to transfer these forces to the structural system of the building through proper connections. SEAOC 1G is concerned with elements when they are loaded by inertia forces due to their own weight rather than by forces they carry as part of a lateral force resisting system. Three sets of things are considered in SEAOC 1G elements of structures (referred to below as structural elements), permanent nonstructural components and their attachments (referred to below as architectural components), and the attachments for permanent equipment supported by structures (referred to below as mechanical and electrical components).

a. Structural elements. These elements, also called "parts and portions of structures," use the horizontal force factors (C_P value) of Part I of SEAOC Table l–H. Structural elements include walls and parapets with lateral loads normal to the flat surface. These out-of-plane effects are discussed in chapter 6.

b. Architectural components. These components use the C_p value of Part II of SEAOC Table l–H. These components include partitions, ornamentation, suspended ceilings, exterior panels, and storage racks. They are covered in chapter 11.

c. *Mechanical and electrical components. These* components, which use the C_P value of Part III of SEAOC Table l-H, are covered by chapter 12 and include chimneys and smokestacks, as well as equipment and machinery.

4-16. Nonbuilding structures. This manual is primarily concerned with the design of buildings; however, provisions are also included for some structures other than buildings. When these structures are designed in accordance with SEAOC equation 1–1 in SEAOC 1E2, an R_W value of 3 to 5 is used, as specified in SEAOC Table l–I. These lower values are justified by the assumption that these structures will generally have lower damping characteristics, less inelastic deformation capacity, and less redundancy than typical buildings. Procedures and guidelines for nonbuilding structures are included in chapter 13.

4-17. Planning. Planning involves predesign studies and preliminary design. Design development and final design are discussed in paragraph 4-18.

a. Predesign studies.

(1) Site planning. Site planning considers geologic, foundation, and tsunami (sea-wave) hazards as well as seismicity. Structures will not be sited

over active geologic faults, in areas of instability subject to landslides, where soil liquefaction is likely to occur, or in areas subject to tsunami damage.

(a) *Seismic zones.* The probability of the severity, frequency, and potential damage from ground shaking varies in different geographic regions. Regions with similar hazard factors are identified as seismic zones.

(b) Fault zones. Damage that is directly or indirectly caused by ground distortions or ruptures along a fault cannot be eliminated by design and construction practices; therefore site planning must avoid these particularly hazardous locations.

(c) *Tsunami protection.* Each region along the Pacific coast must be separately and carefully investigated for its tsunami-generating characteristics. Particular coastlines, inlets, and bays of the Pacific Ocean boundary are resonators of tsunami waves and may greatly amplify the effects. Assuming that tsunami warning services can ensure the safety of human life, there is as yet no hard-and-fast rule for establishing safety and economic standards. Where feasible, power plants, oil storage tanks, and other strategic facilities should be located on high ground, out of reach of high water.

(d) Other hazards. Other hazards associated with earthquakes include subsidence and settlement due to consolidation or compaction, landslides, and liquefaction. Liquefaction is a common occurrence in relatively loose, cohesionless sands and silts with a high water table. The earthquake motions can transform the soil into a liquefied state as a consequence of the increase in pore pressure. This can result in a loss of strength in bearing capacity of the soil supporting a building, causing considerable settling and tilting. Also, this loss of strength can occur in a subsurface layer, causing lateral movement of surficial soil masses of several feet, along with ground cracks and differential vertical displacements. These movements have severed pipelines and damaged bridges and buildings. There are several ways to stabilize the ground, such as providing drainage wells, pressure grouting, or removing the liquefiable zone, but often the susceptible area is too extensive for an economical solution. The exposure to these hazards varies with the geography, geology, and soil conditions of the site and the type of structure to be constructed. The professional judgment of geologists, geotechnical engineers, and structural engineers will be used to establish reasonable standards of safety.

(2) *Conceptual planning.* Collaboration of the architect and structural, mechanical, and electrical engineers is necessary to establish a concept for the overall building system, to establish design criteria for the specific facility, to select the materials of construction, and to reconcile the conflicting requirements of architectural, structural, mechanical, and electrical systems. A quick estimate of the design lateral earthquake forces should be made to establish approximate component sizes and the layout of the lateral force resisting system. The locations of seismic joints and the possibility of future expansion must be considered at this stage.

b. Preliminary design.

(1) Selection of system. Before selecting the structural system, it is essential that the planners be familiar with the fundamentals of seismic design. Consideration should be given to the architectural and functional requirements, the need for future modifications related to use, the need for damage or drift control, and an evaluation of the economics and availability of the specific materials and the construction practices at the site.

(2) *Redundancy.* It is strongly recommended that the lateral force resisting system be made as redundant as possible; multiple lines of resistance are preferable to perimeter resistance only, and multiple bents or bays of resistance in each bracing line are much more desirable than a single bent or bay. Good torsional rigidity is also essential. The object is, first, to create a system that will have its inelastic behavior distributed nearly uniformly throughout the plan and elevation of the system and, second, to have such a degree of redundancy that softening or failure of a particular element can result in load redistribution to the associated redundant elements without the possibility of collapse.

(3) Damage control considerations. Damage to the structure and repairability of the structure were not prime considerations in the development of the R_w-factors. Thus, it may be appropriate for the engineer to consider these concerns and increase the level of loading, stiffness, and detailing requirements if it is desired to control the amount of damage and/or decrease the cost of repairing the damage resulting from the earthquake.

(4) Selection of trial structural member size. Some of the structural members of a building are governed by the gravity load design, and their size selection may not be affected by the addition of the seismic loads. For these members the sizes will have been determined by the usual requirements for dead and live loads. For the sizes of members that form the seismic lateral force resisting system, a trial-and-error process is generally required because of the relationship between design lateral forces, structure periods, and lateral drift limitations. For the first trial design, lateral forces are obtained from approximations of period and

weight. SEAOC equation 1-3 may be used for periods. The base shear and story forces are determined. Next, trial member sizes are selected by using approximate calculations and judgment. Finally, a preliminary analysis is made, and the trial sizes are confirmed or revised. If there are substantial revisions to the initial trial sizes, the structure period and the lateral drift will change, and a reanalysis may be required.

4-18. Design.

a. Design development. This phase of the design process involves identification and location of primary structural elements, determination and distribution of lateral seismic forces, preparation of design calculations, detailing of connections, detailing of nonstructural parts for damage control, and preparation of clear, complete contract drawings and specifications.

b. Final design considerations. After the structural elements have been selected and analyzed, a final design check must be made to verify that the initial assumptions are correct, and whether or not the resulting structure satisfies the intent of the seismic provisions.

(1) Comparison of final sizes with initial estimates.

(a) *Weights.* It is necessary to compare the final weights of the building with the weight used to determine the seismic forces. If the weight has increased significantly (say, over 5 percent), redesign will be necessary.

(b) *Stiffness.* If the final member sizes are substantially different from the initial estimates, a re-evaluation of the design will be necessary. If the relative stiffnesses of the varying elements have changed significantly, the distribution of lateral forces must be re-evaluated.

(c) *Period. If* the initial period was determined by Method B using structural properties and deformation characteristics, such as in SEAOC equation 1-5, the initial stiffness and weight properties must be compared with the final properties of the structure. If the final period is shorter than the initial period that was used to calculate the lateral forces, a new set of forces must be calculated and applied to the structure.

(d) *Displacements. If* the final stiffness, period, or forces have changed substantially, displacements will have to be recalculated to check for compliance with the various provisions for drift and deformation.

(2) *Path of forces.* Upon completion of the design, a final check will be made to determine that all the inertia forces can be transmitted without instability from their source to the base of the structure.

(3) *Details.* It is necessary to check the structural details to ensure that the intent of the design calculations and the seismic design detailing is properly provided for on the construction drawings.

(4) *Specifications.* The specifications must be checked to ensure that the intent of the design calculations, material strength assumptions, and seismic design detailing is properly provided for in the job specifications.

CHAPTER 5

DIAPHRAGMS

5-1. Introduction. This chapter prescribes the criteria for the design of horizontal diaphragms and horizontal bracing of buildings in seismic areas, indicates principles and factors governing the horizontal distribution of lateral forces and resistance to lateral forces, gives certain design data, and illustrates typical details of construction.

5-2. General.

a. Function. Floors and roofs, acting as diaphragms, are the horizontal resisting elements in a building. Diaphragms are subject to lateral forces due to their *own* weight plus the tributary weight of walls connected to them. The diaphragms distribute the lateral forces to the vertical elements, the shear walls or frames, which resist the lateral forces and transfer them to lower levels of the building and finally to the ground. If floors or roofs cannot be made strong enough, their diaphragm function can be accomplished by horizontal bracing. In an industrial building, horizontal bracing can be the only resisting element. Where there is a horizontal offset between resisting vertical elements above and below, the diaphragm transfers lateral forces between the. Diaphragms are treated in this chapter; the resisting vertical elements are treated in subsequent chapters.

b. Horizontal elements. There are two types of horizontal elements: diaphragms and horizontal bracing.

(1) *Diaphragms.* Usually the roof and the floors of the building perform the function of distributing lateral forces to the vertical resisting elements (such as walls and frames). These elements, called diaphragms, make use of their inherent strength and rigidity, supplemented, when needed, by chords and collectors. A diaphragm is analogous to a plate girder laid in a horizontal plane (or inclined plane, in the case of a roof). The floor or roof deck functions as the girder web, resisting shear; the joists or beams function as web stiffeners; and the chords (peripheral beams or integral reinforcement) function as flanges, resisting flexural stresses (fig 5–l). A diaphragm may be constructed of any material of which a structural floor or roof is made. Some materials, such as cast-in-place reinforced concrete and structural steel, have well-established properties and present no problems for diaphragm design once the loading and reaction system is known. Other materials, such as wood sheathing and metal deck, have properties that are well established for vertical loads but not so well established for lateral loads. For these materials, tests have been required to demonstrate their ability to resist lateral forces. Moreover, where a diaphragm is made up of units such as sheets of plywood or metal deck, or precast concrete units, the characteristics of the diaphragm are, to a large degree, dependent upon the connections that join one unit to another and to the supporting members.

(2) *Horizontal bracing.* A horizontal bracing system may also be used as a diaphragm to transfer the horizontal forces to the vertical resisting elements. A horizontal bracing system may be of any approved material. A common system that is not recommended is the rod or angle bracing used in industrial buildings. The general layout of a bracing system and the sizing of members must be determined for each individual case in order to meet the requirements for load resistance and deformation control. The bracing system will be fully developed in both directions so that the bracing diagonals and chord members form complete horizontal trusses between vertical resisting elements (fig 5-2). Horizontal bracing systems will be designed using diaphragm design principles.

c. *Seismic loadings.*

(1) *Principal load.* Floors and roofs used as diaphragms will be designed to resist the lateral forces specified in SEAOC 1H2j, acting in any horizontal direction. This load is for the diaphragm as a whole and its connections to the resisting shear walls or frames. The load represents the inertia forces originating from the weight of the diaphragm and the walls and other elements attached thereto.

(2) *Transfer forces.* The diaphragm design will also provide for transfer of forces from vertical resisting elements above to vertical resisting elements below where there is an offset or change of stiffness between the upper and lower walls (SEAOC 1H2j(1)(b)). (The designer is urged to be cautious in the use of computer analysis of structures with offsets in the vertical elements.)

(3) *Collectors.* The diaphragm will also be provided with collectors. These members collect diaphragm forces that are distributed along a portion of the depth of the diaphragm and transfer them as a concentrated load to a resisting wall or frame (SEAOC 1H2f).

(4) *Reformational compatibility.* When diaphragms move, they carry with them the tops of

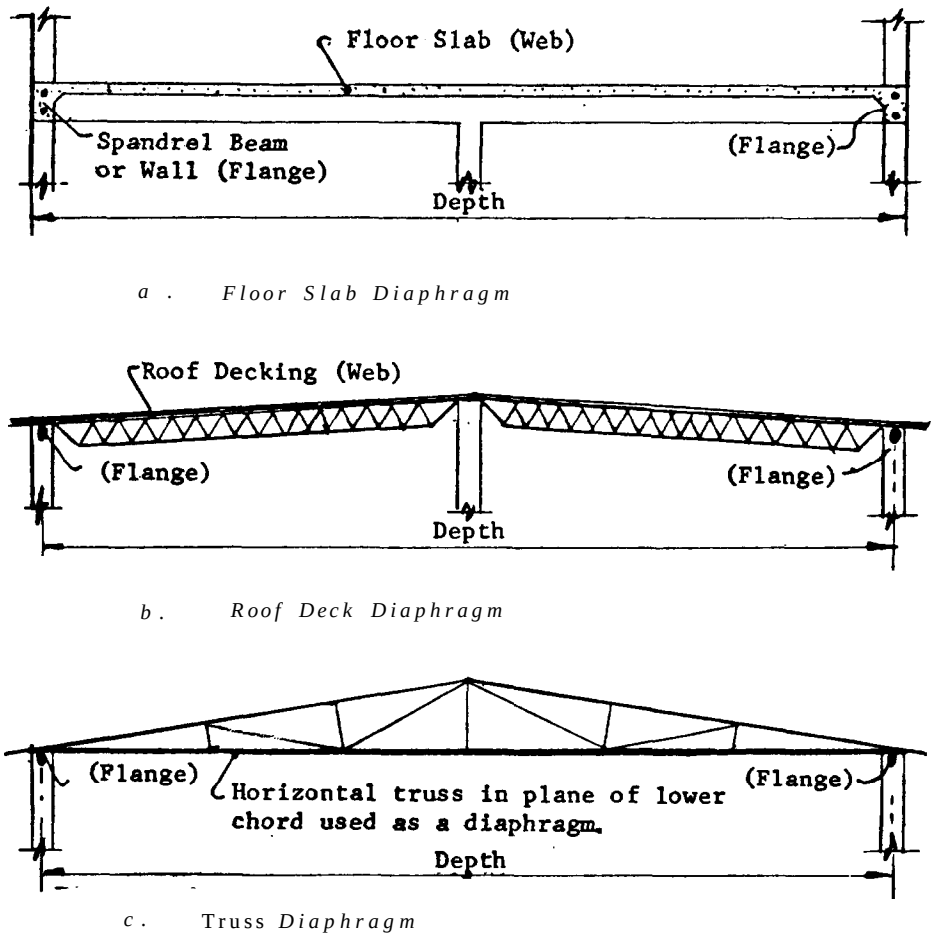

Figure 5–1. Diaphragms.

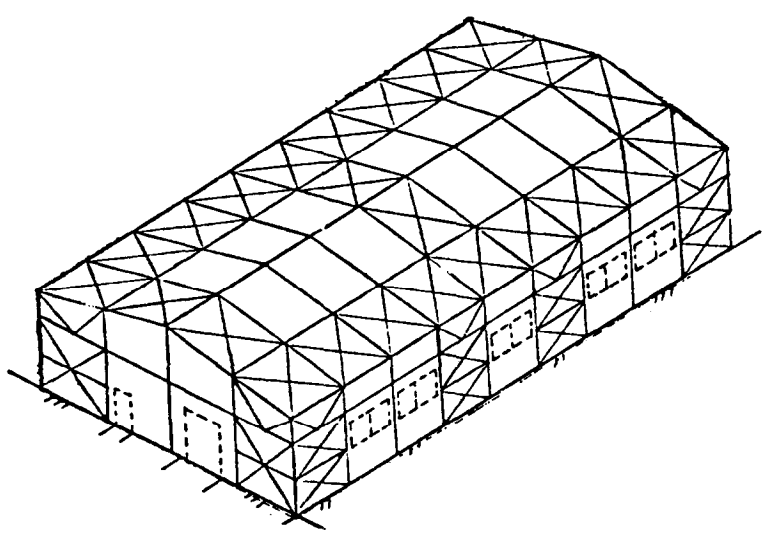

Figure 5-2. Bracing an industrial building.

other vertical elements, ones that are not part of the lateral force resisting system. Such elements are subject to the requirement for deformational compatibility. Columns, for example, are subject to side-sway moments when the diaphragms at the top and the bottom of the column have a relative displacement, and the columns have sufficient ultimate strength to sustain such moments when the diaphragm displacement is $3(R_w/8)$ times the displacements due to design forces for the diaphragm.

d. Diaphragm selection. Roofs and floors are usually utilized as diaphragms; therefore, diaphragm requirements must be considered when

the overall structural system is selected. The diaphragm system must be compatible with the criteria governing the vertical load carrying capacities and the fire-resistant qualities. Relative costs of various types of suitable diaphragms should be investigated to achieve the greatest economy. Special considerations for diaphragm selection are summarized below.

(1) *Metal building systems.* For buildings with vertical moment resisting frames in the transverse direction, the systems connecting these frames are only nominal bracing with little or no computed stress, since each frame can be designed to carry its tributary lateral force. However, in the longitudinal direction, where only the exterior walls resist seismic forces, the diaphragm must span from side wall to side wall. Tension-only bracing may be used only if the structure is very light.

(2) *Multistory frame structures.* For multistory buildings with moment resisting frames, diaphragms will be rigid enough to distribute horizontal forces and torsion *in* proportion to the relative rigidities of the frames. A more flexible diaphragm on such structures *is* to be avoided because it would permit portions of the building to vibrate out of phase with the rest of the structure.

5-3. Diaphragm flexibility.

a. Relative/flexibility. The diaphragm design forces at any level include the forces tributary to the diaphragm and forces brought down to the diaphragm by vertical resisting elements above the diaphragm. The forces will be distributed to the various vertical elements below the diaphragm according to the relative flexibility of the diaphragm, i.e., the flexibility of the diaphragm relative to the flexibility of the vertical elements that provide the lateral support below the diaphragm. Diaphragms are classified as rigid or flexible. The difference between flexible and rigid diaphragms is illustrated in figure 5–3. As shown in figure 5-3, part a, the example building has two bays with shear walls of various rigidities.

(1) *Flexible diaphragm.* In one extreme case (fig 5-3, part b), the resisting vertical elements are perfectly rigid and have no deformation. In this case, diaphragm deflections occur between supports that do not move. The diaphragm deflections are in the same direction as the design loads. The diaphragm acts as like a continuous beam: the diaphragm moments and shears are obtained by familiar procedures for continuous beams. For a given direction of design forces, the vertical elements that are perpendicular to this direction move with the diaphragm and so are subject to out-of-plane deformations, but these elements take no part in the resistance to lateral forces: the lateral resistance is provided only by the elements parallel to the lateral forces. Of course, no wall or frame is perfectly rigid; for design purposes however, a diaphragm is assumed to fit this case if it is only relatively flexible compared with the walls or frames. SEAOC 1E6a provides the deflection criterion for determining when the diaphragm is to be considered flexible. This is illustrated in figure 5-4. The wood diaphragm is an example of a relatively flexible diaphragm. It is customary to design wooden diaphragms as flexible diaphragms whether the vertical elements are concrete walls, steel moment or braced frames, or plywood shear walls. Unfilled metal-deck roof diaphragms are also considered relatively flexible when the vertical elements are concrete walls or steel frames. Flexible diaphragms are usually designed by a simple procedure that ignores continuity in the beam and treats each diaphragm as a simple beam between resisting walls or frames. This is the "tributary area" model (fig 5-3, part c). In this method it is customary to proportion the chords for the simple-beam moments, but then to detail them to be continuous over the length of the building so as to preclude damage in the walls where the beam-end rotations of the simple beams would make the chord ends separate or compress. This procedure is simple and cost-effective because the simple-beam chord forces are generally larger than those that would be developed from a continuous-beam analysis.

(2) Rigid *diaphragm.* In the other extreme case, the diaphragm is perfectly rigid and has no deformations (fig 5-3, part d). In this case the distribution of forces in the diaphragm depends on the stiffness of the resisting vertical elements. In the example shown in figure 5-3, each end wall has twice the rigidity of the center wall: this means that the reaction at each end wall is twice that of the center wall, and the diaphragm shears are determined from these reactions. Just as there are no perfectly rigid walls, there are no perfectly rigid diaphragms, but relatively rigid diaphragms fit this case. Concrete diaphragms and concrete-filled metal-deck diaphragms are usually considered to be relatively rigid.

(3) *Diaphragm of intermediate flexibility.* Between the two extremes discussed above, there are cases where the diaphragm is flexible enough to have significant deflection under lateral load but is stiff enough to distribute a portion of its load to vertical elements in proportion to the rigidities of the vertical resisting elements. The action is analogous to a continuous concrete beam system of appreciable stiffness of yielding supports. The support reactions are dependent on the relative stiffnesses of both the diaphragm and the vertical

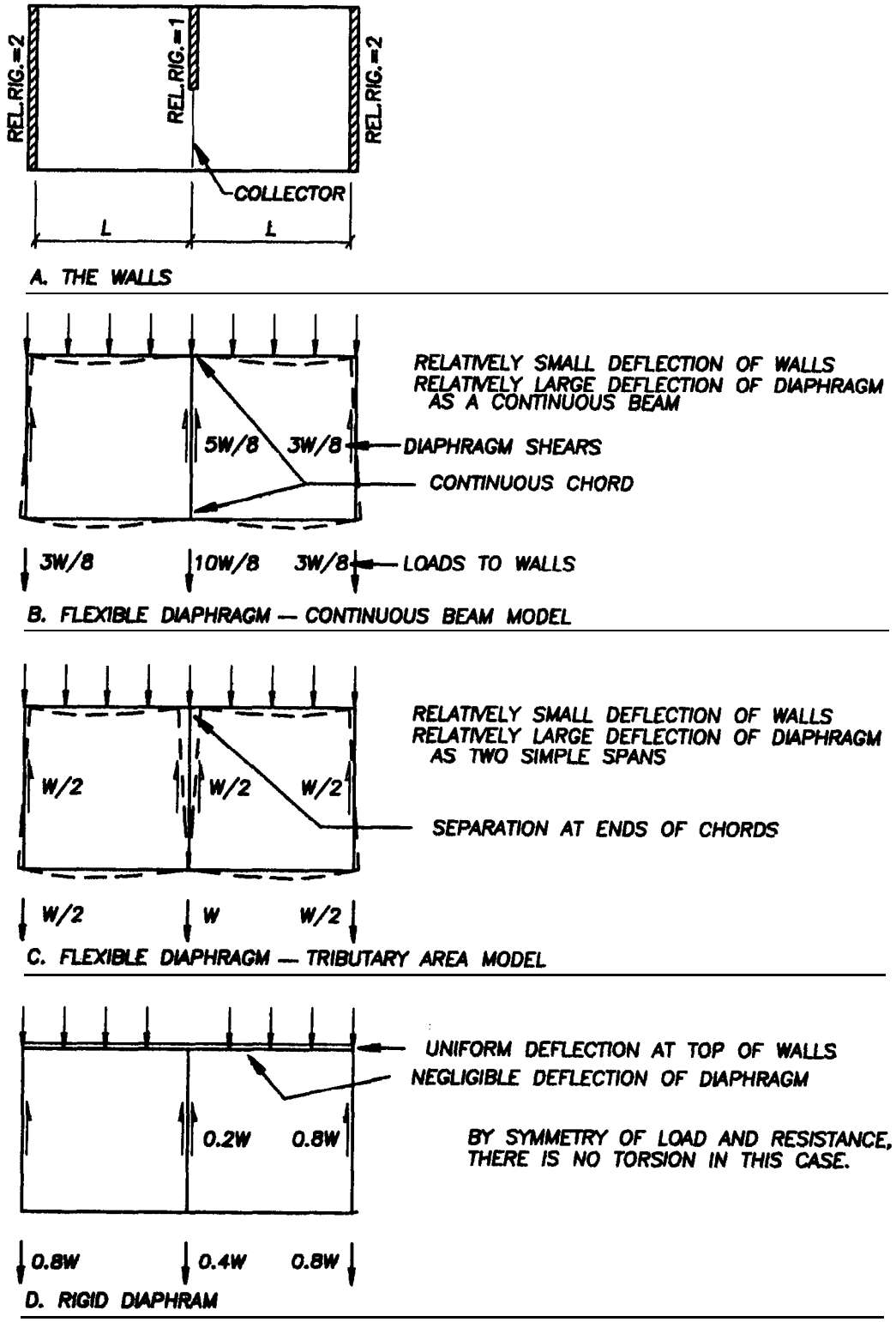

Figure 5-3. Diaphragm flexibilities.

elements. A rigorous analysis is usually very time-consuming and is seldom justifiable in terms of the doubtful accuracy of the results, at best, the results are no better than the assumptions (flexible and rigid) that must be made. In such cases the design can be based on two sets of assumptions that reasonably bracket the likely range of reactions and deflections.

b. Rotation. The example of figure 5–3 involves simple cases of diaphragms that have symmetry of load and reaction. In cases where there is a lack of symmetry, either in the load or the reaction, the

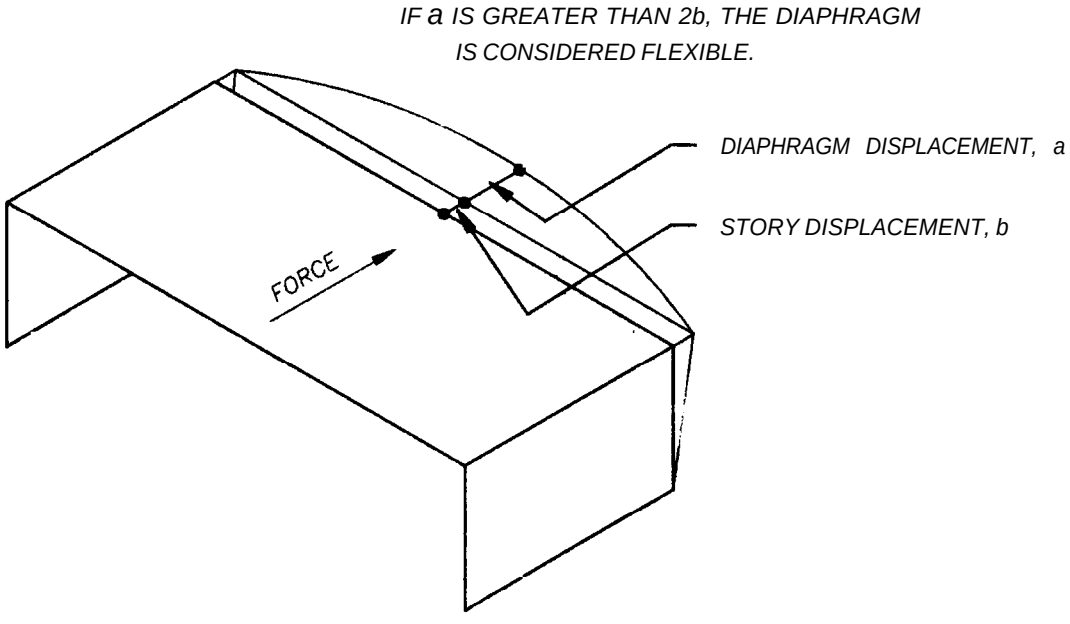

Figure 5-4. Flexible diaphragm.

diaphragm will experience a rotation. Rotation is of concern because it can lead to vertical instability. This is illustrated in the following cases: the cantilever diaphragm and the diaphragm supported on three sides.

(1) *Building with a cantilever diaphragm.* An example is shown in figure 5–5. The layout of the resisting walls is shown in figure 5–5, part a. If the backspan is flexible relative to the walls (fig 5–5, part b), the forces exerted on the backspan by the cantilever are resisted by walls B, C, and D, provided there are adequate collectors. If the backspan is relatively rigid (fig 5–5, part c), the load from the cantilever is resisted by all four walls (A, B, C, and D). A rigidity analysis is needed in order to determine the forces in the walls.

(2) *Building with walls on three sides.* An example is shown in figure 5–6. For transverse (north-south) forces (fig 5-6, part a), this is a simple case: because of symmetry of load and reactions, the end walls share the load equally. For longitudinal (east-west) forces (fig 5-6, part b), there is an eccentricity between the resultant of the load and the centerline of the one east-west resisting wall, wall C. The analysis is simplified by treating the load as a combination of the load, W, acting directly on the wall, and the couple M = WD/2 (fig 5-6, part c). The direct force induces a direct shear, W, on the diaphragm and a reaction, W, in wall C (fig 5–6, part d); the moment, M, is resisted by walls A and B (fig 5-6, part e), causing a counterclockwise rotation of the diaphragm. A particular concern with this type of building is the deflection at the corners at the open side. In figure 5–3, part a, there is an eastward deflection of the south edge of the diaphragm, and if this is excessive it can lead to vertical instability in the southwest and southeast corners.

(a) Flexible diaphragm. In an all-wood building, the concern about rotation is met by limitations on the size and proportions of the diaphragm. In buildings with walls of concrete or masonry, the greater weight causes greater concern for rotation, and there are special limitations on the diaphragms. The limitations are discussed in paragraph 5-10.

(b) Rigid diaphragm. If the diaphragm is rigid, the design of the building will consider the effects of torsion. The concept of orthogonality does not apply.

5-4. Torsion. Torsion, in a general sense, occurs in a building whenever the location of the resultant of the lateral forces, i.e., the center of mass, cm, at and above a given level does not coincide with the center of rigidity, cr, of the vertical resisting elements at that level. If the resisting elements have different deflections, the diaphragm will rotate. Torsion, in this general sense of rotation, occurs regardless of the stiffness properties of the diaphragms and the walls or frames. For purposes of design, however, the procedure for dealing with torsion does depend on these stiffness properties.

a. Flexible diaphragms. Flexible diaphragms such as wooden diaphragms can rotate but cannot develop torsional shears. For example, a single-span diaphragm with a relatively stiff shear wall at one end and a more flexible frame at the other end will rotate because the two resisting elements

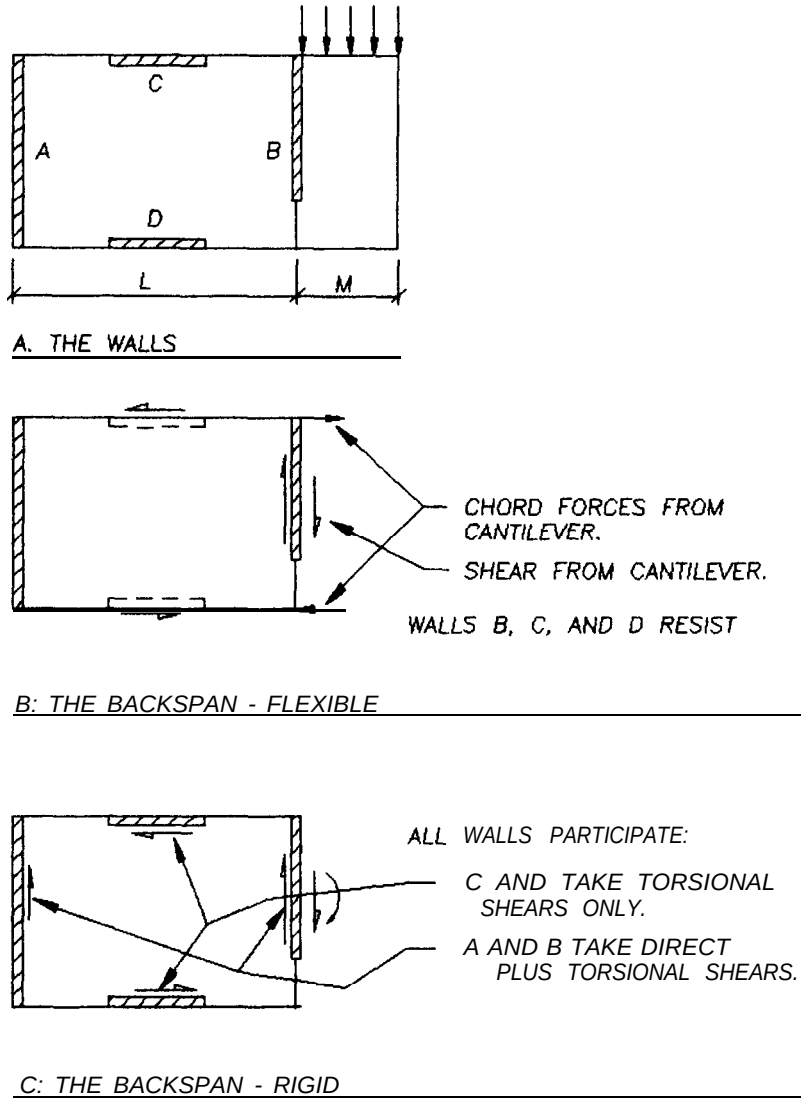

Figure 5-5. Cantilever diaphragm

have different deflections. Flexible diaphragms, however, are considered incapable of inducing forces in the walls or frames that are perpendicular to the direction of the design forces; i.e., flexible diaphragms are said to be incapable of taking torsional moments. All of the lateral load is taken by the walls that are parallel to the lateral forces; none is taken by the other walls. (The building with walls on three sides is a special case and entails special limitations, as discussed above.) Lateral loads are usually distributed to the resisting walls by using the continuous beam analogy. There is no rigidity analysis, no calculation of the cm and the cr. If there are uncertainties about the locations of the loads and the rigidities of the structural elements, the design can be adjusted to bracket the range of possibilities.

b. Rigid diaphragms. When rigid diaphragms rotate, they develop shears in all of the vertical resisting elements. In the example of figure 5-7 there is an eccentricity in both directions, and all five walls develop resisting forces via the diaphragm.

c. *Reformational compatibility.* When a diaphragm rotates, whether it is rigid or flexible, it causes displacements in all elements attached to it. For example, the top of a column will be displaced with respect to the bottom. Such displacements must be recognized and addressed. The design condition is covered by SEAOC 1H2d.

d. Flexibility criterion. Provision for torsional moment is required only where diaphragms are not flexible. The criterion for flexibility (SEAOC 1E6a) is illustrated in figure 5–4.

e. Analysis for torsion. The method of determining torsional forces is indicated in figure 5-7. The diaphragm load, F_{px}, which acts through the cm, is replaced by an equivalent set of new forces. By adding equal and opposite forces at the cr, the diaphragm load can now be ‘described as a combi-

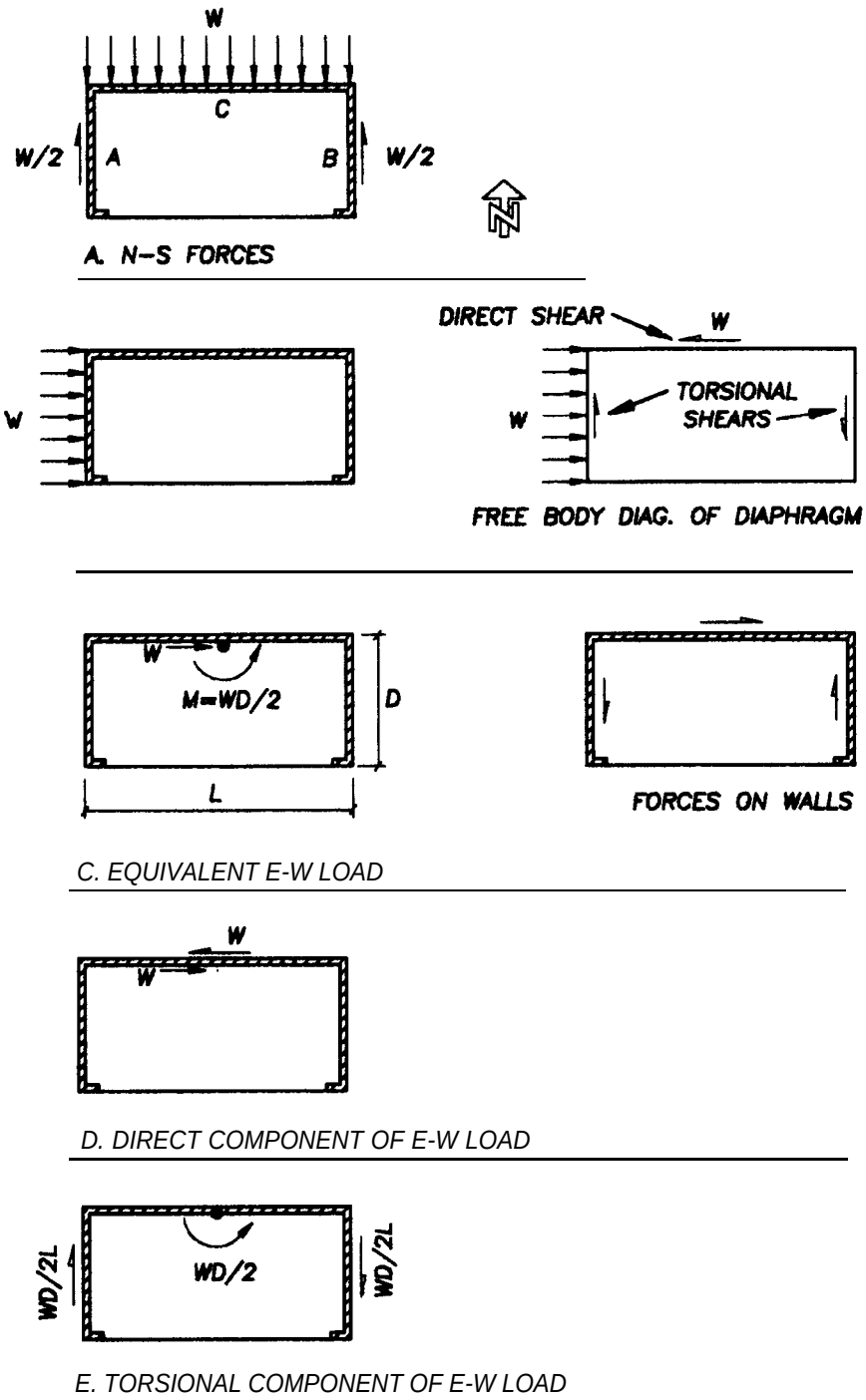

Figure 5-6. Building with walk on three sides.

nation of a force component, F_{px}, (which acts through the cr) and a moment component (which is formed by the couple of the two remaining forces F_{px} separated by the eccentricity e). The moment, called the torsional moment, MT, is equal to F_{px} times e. The torsional moment is often called the "calculated" torsion because it is based on a calculated eccentricity; also this name distinguishes it from the "accidental" torsion which is described below. In the modified loading, the force F_{px} acts through the cr instead of the cm; therefore, it causes no rotation and it is distributed to the walls which are parallel to F_{px} in proportion to their relative rigidities. The torsional moment is resolved into a set of equivalent wall forces by a procedure which is similar to that used for finding forces on bolts in an eccentrically loaded group of bolts. The formula is analogous to the torsion formula $\tau = Tc/J$. Thus the torsional shear forces can be expressed by the formula $F_t = M_T kd/\Sigma\, kd^2$,

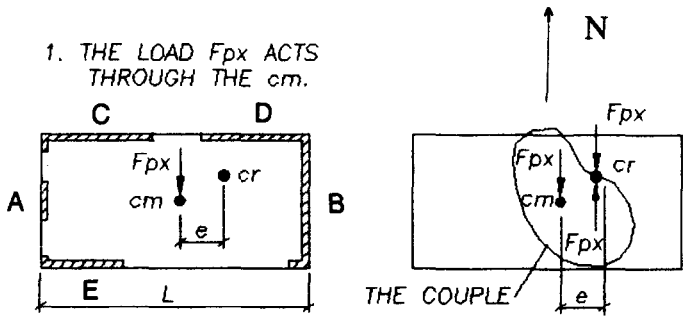

2. ADD AN EQUAL AND OPPOSITE FORCE, Fpx, AT THE cr.

3. USE THE EQUIVALENT LOAD:

a. Fpx, ACTING THROUGH THE cr

b. THE MOMENT FORMED BY THE TWO REMAING Fpx's. THE TORSIONAL MOMENT IS

$$M_T = Fpx \times e$$

Figure 5–7. Calculated torsion.

IF Δ_{MAX} IS GREATER THAN 1.2 X Δ_{AVE} USE SEAOC FORMULA 1–9.

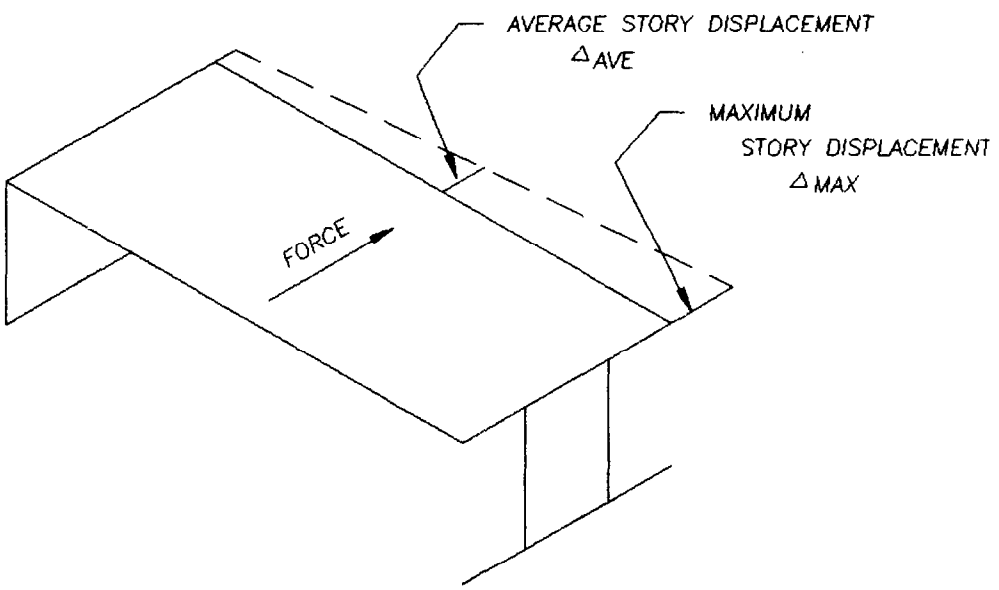

Figure 5-8. Accidental torsion amplification factor.

where k is the stiffness of a vertical resisting element, d is the distance of the element from the center of rigidity, and Σkd^2 represents the polar moment of inertia. For the wall forces, the direct components due to F_{PX} at the cr are combined with the torsional components due to M_T. In the example of figure 5-7, the torsional moment is counterclockwise and the diaphragm rotation will be counterclockwise around the cr. The direct component of the load is shared by walls A and B, while the torsional component of the load is resisted by walls A, B, D, C, and E. Where the direct and torsional components of wall force are in the same direction, as in wall A, the torsional component adds to the direct component; where the torsional component is opposite to the direct component, as in wall B, the torsional component subtracts from the direct. Walls C, D, and E carry only torsional components; in fact, their design will most likely be governed by direct forces in the east-west direction.

f. Accidental torsion. Accidental torsion is intended to account for uncertainties in the calculation of the locations of the cm and the cr. The

accidental torsional moment, MA, is obtained using an eccentricity, e_{acc}, equal to 5% of the building dimension perpendicular to the direction of the lateral forces (SEAOC 1E6); in other words, $MA = F_{PX} \times e_{acc}$. For the example of figure 5-7, the accidental torsion for forces in the north-south direction is $M_T = F_{PX} \times 0.05L$. In hand calculations, M_A is treated like M_T except that absolute values of the resulting forces are used so that the accidental torsion increases the total design force for all walls. In computer calculations, the accidental torsion may be handled by running one analysis, using for eccentricity the calculated eccentricity plus the accidental eccentricity, then running a second analysis, using the calculated minus the accidental eccentricity, and finally, selecting the larger forces from the two cases.

g. Amplification of accidental torsion. When a torsional irregularity exists, the accidental torsion may be required to be increased. See SEAOC 1E6d and figure 5–8.

5-5. Flexibility limitations. The deflecting diaphragm imposes out-of-plane distortions on the walls that are perpendicular to the direction of lateral force. These distortions are controlled by proper attention to the flexibility of the diaphragm. A diaphragm will be designed to provide such stiffness that walls and other vertical elements laterally supported by the diaphragm can safely sustain the stresses induced by the response of the diaphragm to seismic motion.

a. Empirical rules. Direct design is not feasible because of the difficulty of making reliable calculations of the diaphragm deflections; instead, diaphragms are usually proportioned by empirical rules. The design requirement is considered to be met if the diaphragm conforms to the span and span/depth limitations of table 5–1. These limitations are intended as a guide for ordinary buildings. Buildings with unusual features should be treated with caution. The limits of table 5-1 may be exceeded, but only when justified by a reliable evaluation of the strength and stiffness characteristics of the diaphragm. For use of table 5–1, the flexibility category in the first column of the table can be determined with little or no calculation: concrete diaphragms are rigid; gypsum diaphragms are semirigid; metal deck diaphragms can be semirigid, semiflexible, or flexible; plywood diaphragms can be very flexible, flexible, or semiflexible; special diaphragms of diagonal wood sheathing are flexible; and conventional diaphragms of diagonal wood sheathing and diaphragms of straight wood sheathing are very flexible. (Very flexible diaphragms are seldom used in new construction because of their small capacities.) Each flexibility category of table 5–1 is associated with a range of values for the flexibility factor, F, and criteria for stiffness are specified in terms of the F-values given in the second column of table 5–1. When a value of F is needed in order to determine a flexibility category, it is obtained

Flexibtity Category	F	Allowable Span of Diaphragm (feet)	Diaphragm Span/Depth Limitations	
			Concrete or Masonry Walls[1]	Other walls
Very Flexible[2]	Over 150	50	Not to be used	2:1
Flexible	70-150	100	2:1	3:1
Semi-flexible	10-70	200	2½:1	4:1
Semi-rigid	1-10	300	3:1	4:1
Rigid	Less than 1	400	4:1	4:1

Note:

[1]Walls in concrete and unit-masonry are classified as brittle; in all cases, check allowable drift before selecting type of diaphragm.

[2]For Zones 1 and 2, diagonally sheathed and plywood diaphragms in the "Very Flexible" category may be used for lateral support of masonry and concrete walls in one-story buildings where the diaphragm is not required to act in rotation.

Table 5-1. Flexibility limitation on diaphragms.

by procedures presented in the following section. Given either the flexibility category or the F-value, the maximum span is obtained from the third column of table 5–1, and span/depth limitations are given in the fourth column.

b. F-factor. When an F-factor is needed, it will be calculated by the following procedure. The flexibility factor, F, is equal to the average deflection in micro inches (millionths of an inch) of the diaphragm web per foot of span stressed with a shear of 1 pound per foot. Expressed as a formula, this becomes

$$F = \frac{D_w x 10^6}{q_{awe} L_1} \qquad \text{(eq 5-1)}$$

where

L_1 = distance *in* feet *from* the adjacent vertical resisting element (such as sheer wall) and the paint to which the deflection is to be determined

q_{ave} = average shear in diaphragm in pounds per foot over length L_1

Δ_w = web component of diaphragm deflection

Note that for a diaphragm with a single span of length, L, and a uniformly distributed load, W, the average shear to be used in calculating q_{AVE} is W/4, and L_1 = L/2. The procedures for calculating F, given in paragraphs 5-4 through 5–8, are summarized as follows

(1) *Concrete diaphragms. The* F-factor is obtained from conventional beam theory for shearing deflection. Using the procedure given in paragraph 5-7, one can calculate the shearing procedure given in paragraph 5–7, one can calculate the shearing deflection without having to know the beam theory. It should be noted that because concrete (and concrete-filled steel deck) diaphragms are generally rigid, deflections are seldom calculated.

(2) *Steel deck diaphragms.* The F-factor is obtained from formulas that were derived from tests. Values for F for common types of diaphragms are given in tables in this manual. Some manufacturers provide values in their literature. When the F-factor is not available, it can be calculated by using the procedures of paragraph 5–6. In most cases formulas for F have been published only in the literature of the companies supplying these materials. These formulas have usually been based on a limited number of tests and have been derived empirically to fit the test data applicable to them. As more and more tests were run, the formulas were altered to incorporate the new data. This has led to many somewhat similar formulas for identical diaphragm components supplied by different manufacturers. The formulas used in this manual have been developed by using as a basis all of the test data made available to the Tri-Service Seismic Design Committee at the time of the 1973 edition of this manual and may be subject to some revision in the future as new data are obtained.

(3) *Plywood diaphragms.* A formula for F is given in paragraph 5–10.

(4) *Wood-sheathed diaphragms.* Values for F are given in table 5–2.

HORIZONTAL WOOD DIAPHRAGMS	F	ALLOWABLE SHEAR lbs./lin.ft.(q_D)
1“ Straight Sheathing	1,500	50
2" Straight Sheathing	1,500	40
Conventional 1“ Diagonal Sheathing - 1x6 & 1x8	250	300
Conventional 2" Diagonal Sheathing	250	400
Special Construction	75	600
Note The allowable shears shown in Table are basic values to which the factors for species shown in Figure 6-19 will be applied.		

Table 5–2. Flexibility and allowable shears.

c. Diaphragm deflections. When a deflection calculation is needed, the following procedure will be used.

(1) *Deflection criterion. The* total deflection of the diaphragm under the prescribed static forces will be used as the criterion for the adequacy of the stiffness of a diaphragm. The limitation on deflection is the allowable amount prescribed for the relative deflection (drift) of the walls between the level of the diaphragm and the floor below. Refer to chapter 6 and figure 6-5.

(2) *Deflection calculations.* The total computed deflection of diaphragms (Δ_d) under the prescribed static seismic forces consists of the sum of two components: the first component is the flexural deflection (Δ_f) the second component is the shearing deflection (Δ_w). When beams are designed, the flexural component is usually all that is calculated, but for diaphragms, which are like deep beams, the shearing component must be added to the flexural component.

(a) Flexural component. This is calculated in the same way as for any beam. For example, for a simple beam with uniform load, the flexural component is obtained from the familiar formula $\Delta_f = 5wL^4/384EI$. The only question **is** the value of the moment of inertia, I. For diaphragms whose webs have uniform properties in both directions (concrete or a flat steel plate) the moment of inertia is simply that of the diaphragm cross-section. For diaphragms of fluted steel deck, or diaphragms of wood, whose stiffness is influenced by nail slip and chord-joint slip, the flexural resistance of the diaphragm web is generally negligible and the moment of inertia is based on the properties of the diaphragm chords. For a diaphragm of depth D with chord members each having area A, the moment of inertia, I, equals $2A(D/2)^2$, or $AD^2/2$.

(b) Shearing component. If a reliable F-factor is known, the shearing component of deflection can be derived from equation 5–1 as follows:

$$\Delta_w = \frac{q_{ave}L_1F}{10^6} \qquad \text{(eq 5-2)}$$

This equation is directly applicable to steel-deck diaphragms for which values of F are available and to concrete decks for which F is obtained by a simple calculation. If a reliable F-factor is not known, the calculation is based on conventional beam theory. For example, for a diaphragm with a single span of length, L, with a uniformly distributed load, W, the shearing deflection is $\Delta_w = \frac{\alpha WL}{8AG}$, where α is a form factor, A is the area of the web, and G is the shear modulus. Noting that $\frac{W}{A} = \frac{q_{ave}}{t}$, where t is the thickness of the web, the formula for shearing deflection can be expressed as $\Delta_w = q_{ave}L_1$. As noted above, this is applicable only to webs of uniform properties. The procedure for concrete (given in para 5-7) is based on this equation, with $\alpha = 1.5$, $G = 0.4E$, $E = 33w^{1.5}\sqrt{f'_c}$, $\Delta_w = \frac{q_{ave}L_1}{(8.8tw^{1.5}\sqrt{f'_c})}$, where t is the thickness of the slab in inches. This is equation 5–2 with F as given by equation 5-3.

5-6. Design of diaphragms. A deep-beam analogy is used in the design. Diaphragms are envisioned as deep beams with the web (decking or sheathing) resisting shear and the flanges (spandrel beams or other members) at the edges resisting the bending moment.

a. Unit shears. Diaphragm unit shears are obtained by dividing the diaphragm shear by the length or area of the web, and are expressed in pounds per foot (for wood or metal deck) or pounds per square inch (for concrete). These unit shears are checked against allowable values for the material. Webs of precast concrete units or metal-deck units will require details for joining the units to each other and to their supports so as to distribute shear forces.

b. Flexure. Diaphragm flexure is resisted by members called chords. The chords are often at the edges of the diaphragm but may be located elsewhere. The design force is obtained by dividing the diaphragm moment by the distance between the chords, The chords must be designed to resist direct tensile or compressive stresses, both in the members and in the splices at points of discontinuity. Usually chords are easily developed. In a concrete frame, continuous reinforcing in the edge beam can be used. In a steel frame building, the spandrel beams can be used as chords if they have adequate capacity and have adequate end connections where they would otherwise be interrupted by the columns; or special reinforcing can be placed in the slab. Chords need not actually be in the plane of the diaphragm as long as the chord forces can be developed between the diaphragm and the chord. For example, continuous chord reinforcing can be placed in walls or spandrels above or below the diaphragm. In masonry walls, the chord requirements tend to conflict with the control joint requirements. At bond beams, control joints will have to be dummy joints so that reinforcement can be continuous, and the marginal connections must be capable of resisting the flexural and shear stresses developed.

c. *Openings.* A diaphragm with openings such as cut-out areas for stairs or elevators will be treated as a plate girder with holes in the web. The diaphragm will be reinforced so that forces

that develop on the sides of the opening can be developed back into the body of the diaphragm.

d. L- and T-shaped buildings. L- and T-shaped buildings will have the flange (chord) stresses developed through or into the heel of the L or T. This is analogous to a girder with a deep haunch.

5-7. Concrete diaphragms.

a. General design criteria. The criteria used to design concrete diaphragms will be ACI 318 as modified by SEAOC 3B. Concrete diaphragm webs will be designed as concrete slabs; the slab may be designed to support vertical loads between the framing members, or the slab itself may be supported by other vertical load carrying elements, such as precast concrete elements or steel decks. If shear is transferred from the diaphragm web to the framing members through steel deck fastenings, the design will conform to the requirements *in* paragraph 5–9.

b. Span and anchorage requirements. The following provisions are intended to prevent diaphragm buckling.

(1) *General.* Where reinforced concrete slabs are used as diaphragms to transfer lateral forces, the clear distance (L_v) between framing members or mechanical anchors shall not exceed 38 times the total thickness of the slab (t).

(2) *Cast-in-place concrete slabs not monolithic with supporting framing.* When concrete slabs are not monolithic with the supporting framing members (e.g., slabs on steel beams), the slab will be anchored by mechanical means at intervals not exceeding 4 feet on center along the length of the supporting member. This anchorage is not a computed item and should be similar to that shown in figure 5-9, detail A. For composite beams, anchorages provided in accordance with AISC provisions for composite construction will meet the requirements of this paragraph.

(3) Cast-in-place concrete diaphragms vertically supported by precast concrete slab units. If the slab is not supporting vertical loads but is supported by other vertical load carrying elements, mechanical anchorages will be provided at intervals not exceeding 38t. Thus, the provisions above will be satisfied by defining L_v as the distance between the mechanical anchorages between the diaphragm slab and the vertical load carrying members. This mechanical anchorage can be provided by steel inserts or reinforcement, by bonded cast-in-place concrete lugs, or by bonded roughened surface, as shown in figure 5–10. Positive anchorage between cast-in-place concrete and the precast deck must be provided to transmit the lateral forces generated from the weights of the precast units to the cast-in-place concrete diaphragm and then to the main lateral force resisting system.

(4) *Precast concrete slab units. If* precast units are continuously bonded together as shown in figure 5-11, they may be considered concrete diaphragms and designed accordingly as described herein before; see SEAOC 3E6 and 3E7. Intermittently bonded precast units or precast units with grouted shear keys will not be used as a diaphragm. In Seismic Zone 1 (fig 5–12), there is an exception permitting the use of hollow-core planks with grouted shear keys and the use of connectors, in lieu of continuous bonding, for precast concrete members. The exception is permitted if the following considerations and requirements are satisfied.

(a) Procedure conforms with PCI-MNL-120. seismic design requirements.

(b) Shear forces for diaphragm action can be effectively transmitted through the connectors. The shear is uniformly distributed throughout the depth or length of the diaphragm with reasonably spaced connectors rather than with a few which will have localized concentration of shear stresses.

(c) Connectors are designed for $3(R_w/8)$ times the prescribed shear force.

(d) Detailed structural calculations are made including the localized effects in concrete slabs attributed from these connectors.

(e) Sufficient details of connectors and embedded anchorage are provided to preclude construction deficiency.

(5) *Metal-formed deck.* Where metal deck is used as a form, the slab shall be governed by the requirements of paragraph (2) above. Refer to paragraph *5–9d,* where the deck is used structurally.

c. *Special reinforcement.* Special diagonal reinforcement will be placed in corners of diaphragms, as indicated in figure 5–13. Typical chord reinforcement and connection details are shown in figure 5-14.

d. Flexibility factor. The web stiffness factor, F, will be determined by the following formula:

$$F = \frac{10^6}{8.5\ tw^{1.5}\sqrt{f'_c}} \qquad \text{(eq 5-3)}$$

where

t = thickness of the slab in inches

w = weight of conrete in pounds per cubic foot, minimum value of w will be 90 pounds per cubic foot

f'_c = compressive strength of concrete at 28 days in pounds per square inch

Diaphragms of this type are in the rigid category of stiffness and usually have a limitation only on deflection, as specified in SEAOC lH2j.

e. *Electrical raceways. The* placement of electrical raceways in concrete topping slabs may make the slab ineffective as a diaphragm. The effect of

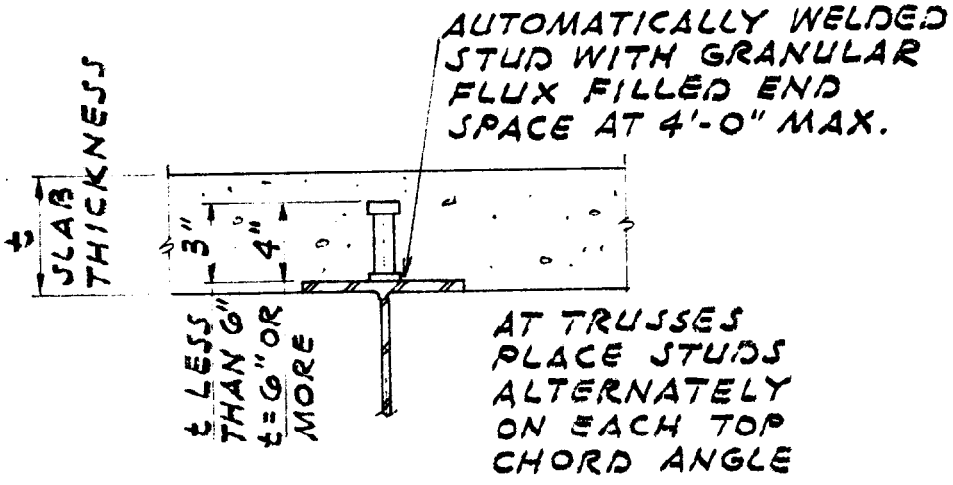

DETAIL A

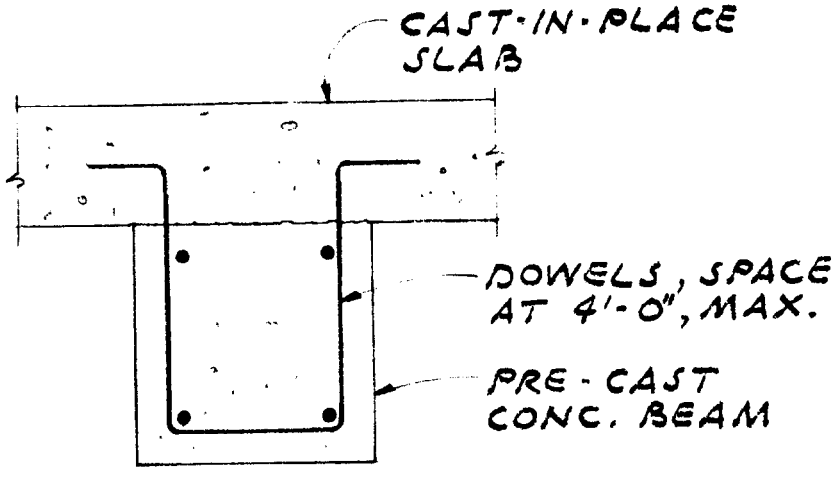

DETAIL B

Slabs Not Monolithic with Supporting Framing

Figure 5–9. Anchorage of cast-in-place concrete slabs.

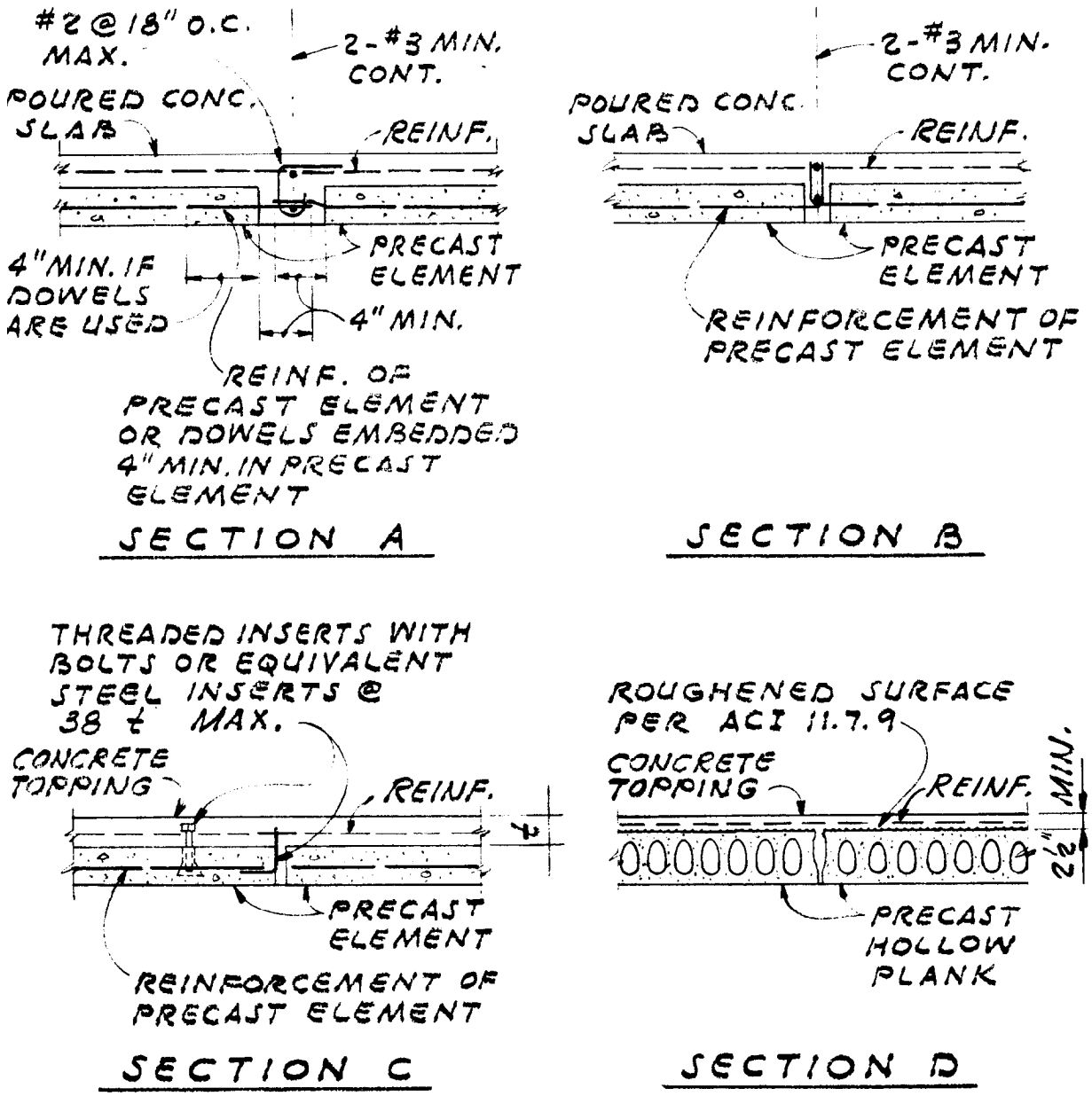

Figure 5-10. Attachment of superimposed diaphragm slab to precast slab units.

the loss of concrete section will be considered, Coordination of structural diaphragm slab with electrical plans will be provided.

5-8. Gypsum diaphragms, cast-in-place.

a. General design criteria. The following criteria will be used to design cast-in-place gypsum diaphragms.

b. Shear capacity.

(1) The allowable diaphragm shear on poured gypsum concrete diaphragms will be as shown in tables 5–3, 5-4, and 5–5 for roof systems using subpurlins and welded wire fabric.

(2) In lieu of tables 5-3 and 5-4, the following formula will be used to determine the allowable shear of the diaphragm:

$$q_D = [.16 f_g t C_1 + 1{,}000(k_1 d_1 + k_2 d_2)] C_2 \qquad \text{(eq 5-4)}$$

where

q_D = allowable maximum shear per foot on diaphragm in pounds per linear foot, the one-third increase usually permitted to working stresses in seismic design is not applicable

f_g = oven-dry compressive strength of gypsum in pounds per square inch, as determined by tests conforming to ASTM C472-73

C_1 = 1.0 for Class A gypsum concrete; 1.5 for Class B gypsum concrete

C_2 = 1.4 for Class A gypsum concrete; 1.0 for Class B gypsum concrete

t = thickness of gypsum between subpurlins, in inches

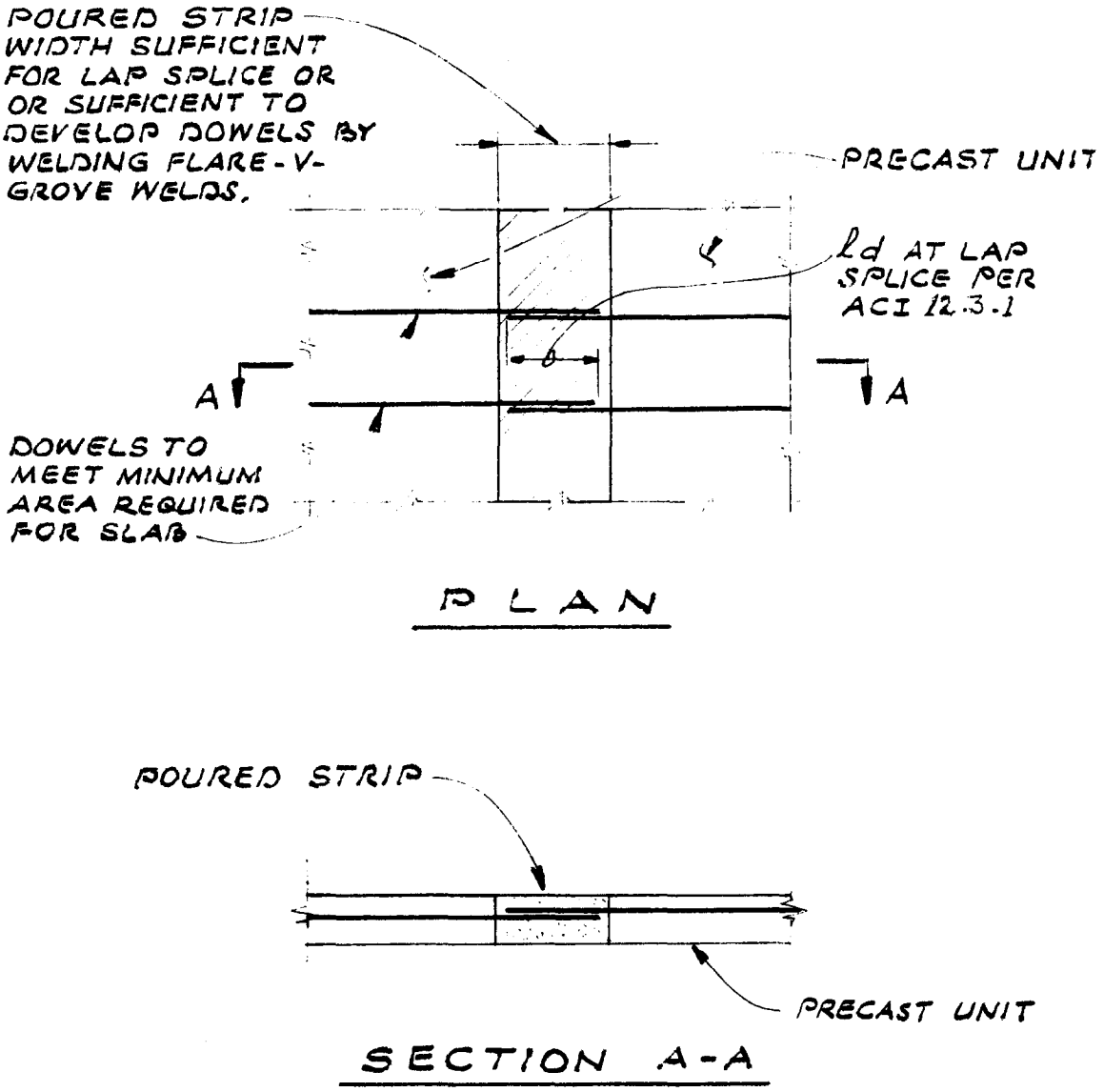

Figure 5-11. Precast concrete diaphragm using precast units.

k_1 = number of welded wire fabric wires per foot passing over subpurlins

d_1 = diameter of welded wire fabric wires passing over subpurlins, in inches

k_2 = number of welded wire fabric wires per foot parallel to subpurlins

d_2 = diameter in inches of welded wire fabric wires parallel to subpurlins

c. *Flexibility factor.* The factor F for determination of diaphragm stiffness and deflections will be determined by the formula

$$F = \frac{140}{\sqrt{q_D}} \qquad \text{(eq 5-5)}$$

where

q_D = the allowable shear specified in tables 5–3 and 5-4 or equation 5-4, in pounds per foot

This indicates that the diaphragm will be in the semirigid category; however, the span depth and span limitations of the semiflexible diaphragm should be used for this type of diaphragm.

d. *Typical details.* Refer to figure 5-15.

5-9. Steel deck diaphragms (single- and multiple-sheet decks).

a. General design criteria The following criteria will be used to design steel deck diaphragms. The three general categories of steel deck diaphragms are Type A, Type B and decks with concrete fill. Design data from industry sources such as the Steel Deck Institute and the Research Reports of the International Conference of Building Officials may be used subject to the approval of the Agency Proponent.

(1) *Typical deck units and fastenings.* Deck units will be composed of a single fluted sheet or a combination of two or more sheets fastened together with welds. The special attachments used

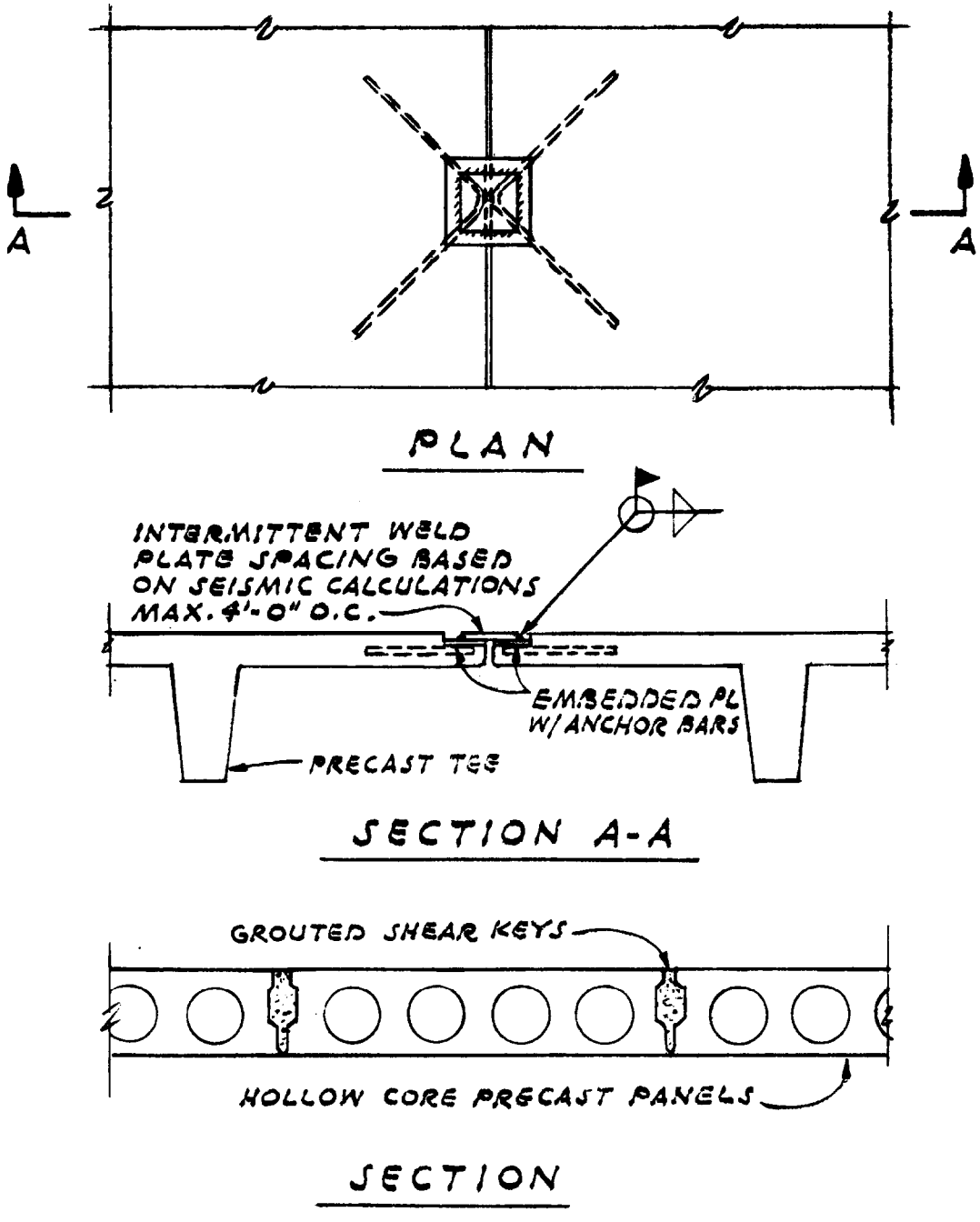

Figure 5-12. Concrete diaphragms using precast unite-details permitted in Seismic Zone 1 only.

for field attachment of steel decks are shown in figure 5-16. In addition to those shown, standard fillet (%-inch by l-inch) and butt welds are also used. The depth of deck units will not be less than 1½ inches.

(2) *Definitions of special symbols.* Definitions of the special symbols used in the determination of the working shears and flexibility of steel deck diaphragms are as follows–

a = number of seam attachment in span L_v along a seem

a_p = average spacing of profile channel closures, in feet

a_s = center-to-center spacing of seam welds in feet, usually L_v/a

a_w = spacing of marginal welds in feet

b = width of deck unit in feet

C_1 = 1

C_2 = 1 for button-punched seams; $40t_s^{3/2}1'_w$ for welded seams

C_3 = 1 for button-punched seams $150t_s1'_w$ for welded seams

C_4 = 1 for button-punched seams; $6/L_v$ for welded seams

C_5 = 1.2 for continuous angle closure; 1 for continuous zee closure $1.44/a_p$ for profile channel closure

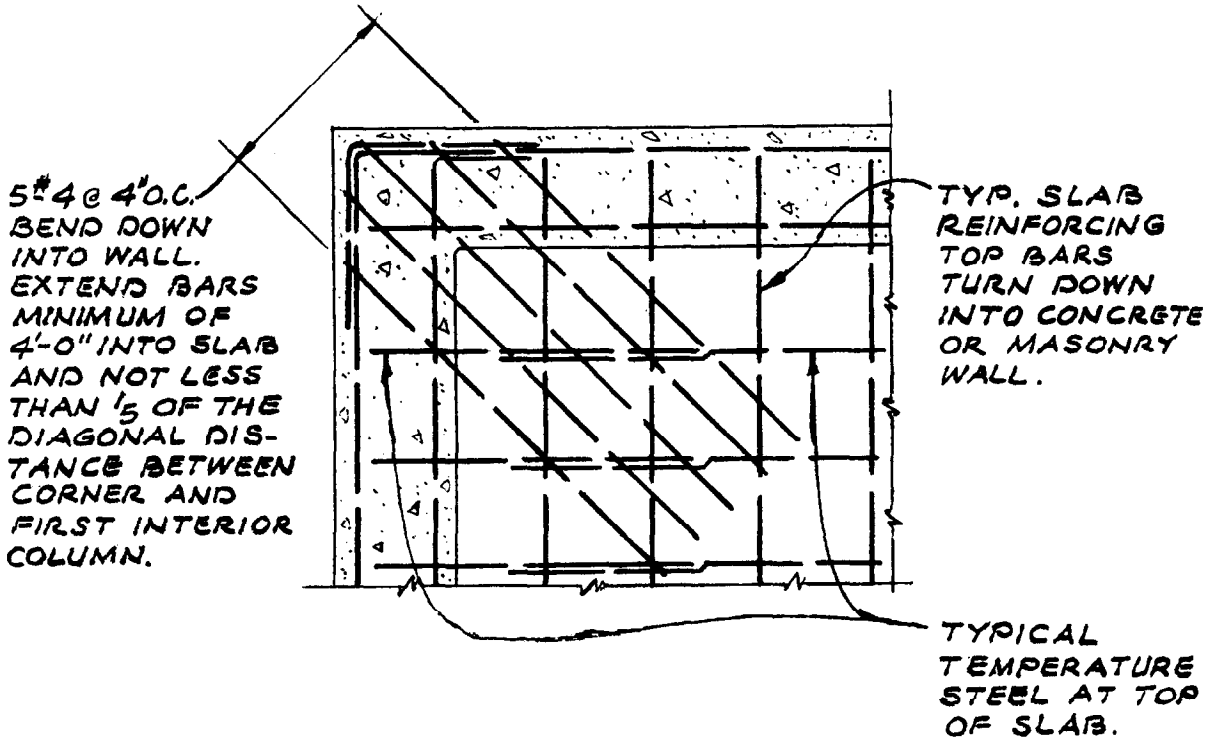

Figure 5-13. Corner of monolithic concrete diaphragm.

d = distance in feet between outermost puddle welds attaching a deck unit to the supporting framing member

$F_1, F_2 \ldots$ = components contributing to the flexibility factor $F = S\ F_n$

f'_c = compressive strength of fill concrete at 28 days in pounds per square inch

h = height of fluted elements in inches (1½ inch minimum)

I_D = gross moment of inertia of deck unit about vertical centerline axis through unit, in inches to the fourth power

I_x = gross moment of inertia of deck unit about the horizontal neutral axis of the deck cross-section per foot of width, in inches to the fourth power

L_1 = distance in feet between vertical resisting element (such as shear wall) end the point to which the deflection is to be determined

L_2 = average length of each deck unit in feet

1_3 = length of edge lip on deck panel in inches (see detail Gin fig 5-16)

L_R = distance in feet between sheer transfer elements

L_v = vertical load span of deck unite in feet

1_1 = minimum length in inches of seam weld

$1'_w$ = effective length in inches of seam weld the ratio of $1'_w/1_w$ for the various types of seam welds is given in figure 5-16

n = average number of vertical deck elements per foot which are laterally restrained at the bottom by puddle welds

q_D = working sheer in pounds per foot the one-third increase usually permitted on working stresses is not applicable to this value

$q_1, q_2 \ldots$ = components or limiting values of working shear in pounds per foot

q_{ave} = average shear in diaphragm over length L_1 in pounds per foot

R = L_v/L_2

S = section modulus in feet of puddle weld group at supports (each weld assumed se unit area)

t_1 = thickness of flat sheet elements in inches (22-gauge minimum)

t_2 = thickness of fluted element in inches (22-gauge minimum)

t'_2 = effective thickness of fluted elements in inches; see figure 5-16 for ratio of t'_2/t_2

t_c = thickness of closure element in inches

f_f = thickness of fill over top of deck in inches

t_s = thickness in inches of deck sheet at seams

w = unit weight of fill concrete in pounds per cubic foot

(3) Connections at ends and at supporting beams. Refer to Type A and Type B details, paragraphs *5-9b* and *5-9c*.

(4) Connections at marginal supports. Marginal welds for all types of steel deck diaphragms will be spaced as follows–

$$a_w = \frac{35{,}000(t_1 + t'_2)\,C\,1}{q} \quad \text{for puddle welds} \qquad \text{(eq 5-6)}$$

$$a_w = \frac{1{,}2001'_w}{q} \quad \text{for fillet welds and seam welds} \qquad \text{(eq 5-7)}$$

In no case will the spacing be greater than 3 feet. See figure 5-17.

(5) *Nonwelded fasteners.* Fastening methods other than welds-such as self-drilling, powder-actuated, or pneumatically driven fasteners-may be used provided that equivalence to the welded

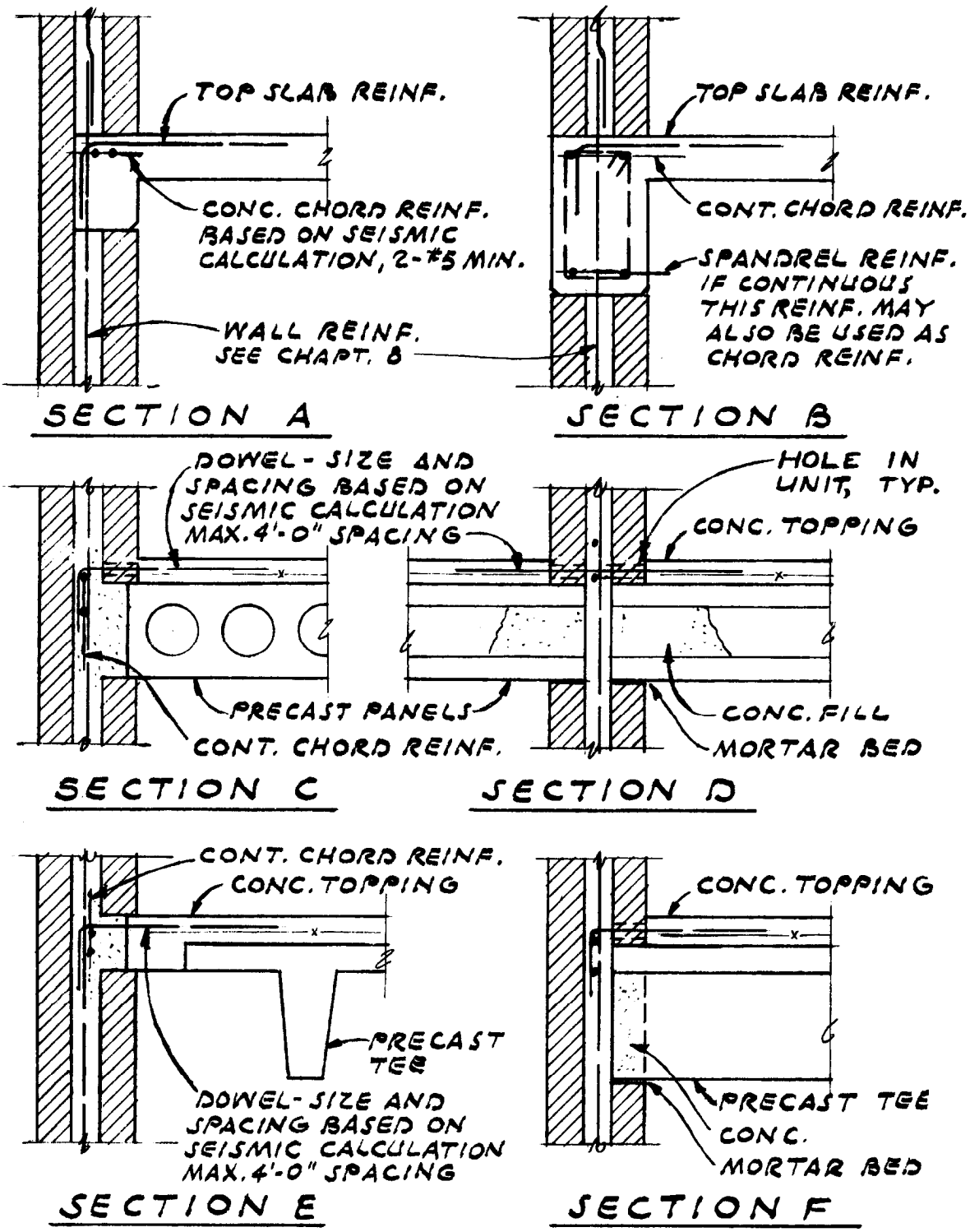

Figure 5-14. Concrete diaphragrms–typtial connection details.

method can be shown by approved test data. The results of such test data will be presented by means of equations or tables for q_D and F in a manner similar to that used in paragraphs *5–9b*, *5-9c*, and *5-9d*.

(6) Maximum effective thicknesses and weld lengths. Even though greater thicknesses and weld lengths may be installed, the maximum values for use in determining the working shears in each type of diaphragm will be as follows:

$t_1 = t_2 = t_s = 0.060$ inch

$t_c = 0.075$ inch

$1_w = 2$ inches

(7) *Thickness of steel. The* thickness of steel

Class	Compressive Strength	Poured Gypsum Thickness	Welded Wire Fabric	*ALLOWABLE SHEAR VALUES (qD)	
				Bulb Tees	Trussed Tees
A	500	2½"	4 x 8 #12 - #14	Not Allowed	890
A	500	2½"	6 x 6 W1.4 x W1.4	Not Allowed	1,040
B	1,000	2½"	4 x 8 #12 - #14	1,040	1,040
B	1,000	2½"	6 x 6 W1.4 x W1.4	1,140	1,140

NOTE: *1/3 increase usually permitted on working stresses in seismic design not applicable.

Table 5-3. Shear values of poured gypsum diaphragm.

Bolt or Dowel Size (Inches)	Embedment (Inches)	Shears (Pounds)
3/8 Bolt	5	250
1/2 Bolt	5	350
5/8 Bolt	5	500
3/8 Deformed Dowel	6	250
l/2 Deformed Dowel	6	350

Notes: *1/3 increase usually permitted on working stresses in seismic design is not applicable.

See Details A2 and A3 in Figure 5-15.

Table 5-4 Shear on anchor bolts and dowels–reinforced gypsum concrete.

Class A	840 pounds per foot
Class B	1,140 pounds per foot

Notes: *1/3 increase usually permitted on working stresses in seismic design is not applicable.

See Details A2, A4, and A5 in Figure 5-15.

Table 5-5. Maximum shear on trussed tees.

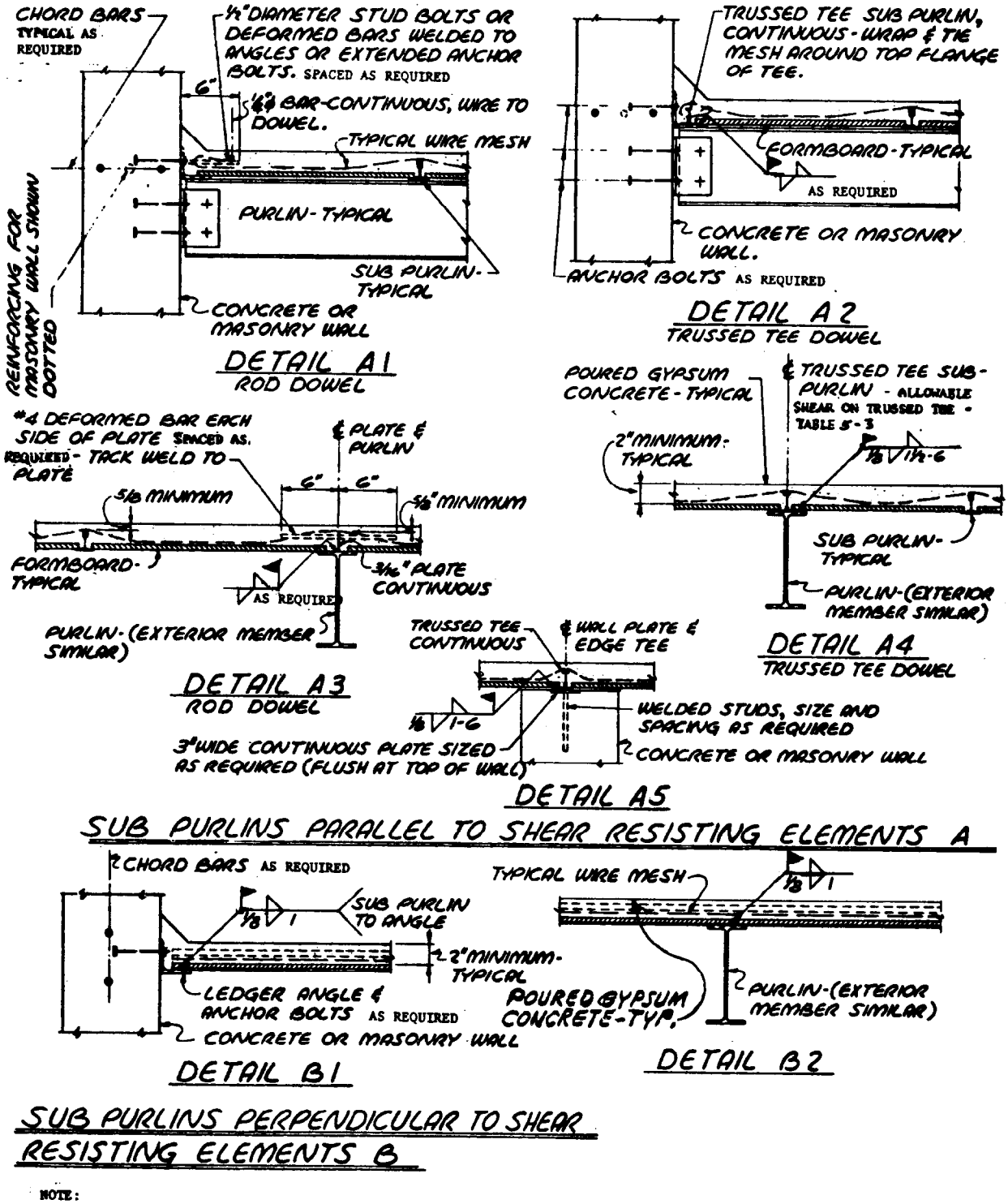

NOTE:

DETAILS WITH SLOPE OF ROOF SIMILAR.

Figure 5-15. Poured gypsum diaphragms-typical details.

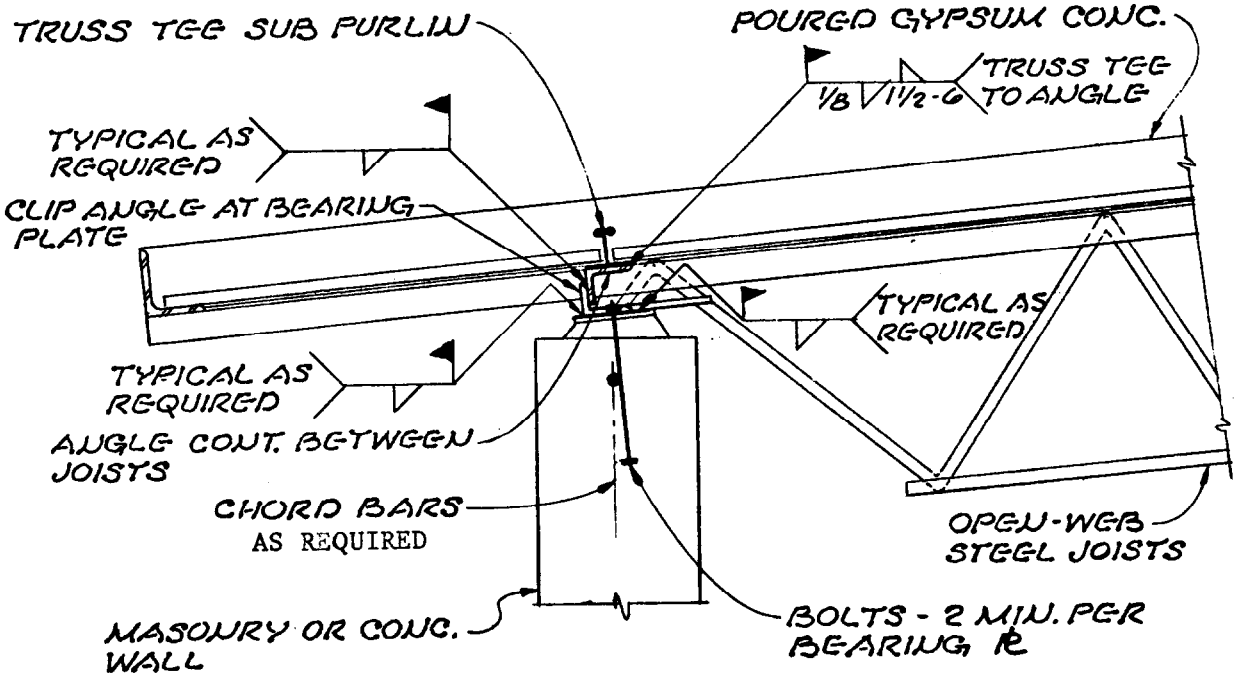

DETAIL A
EAVE

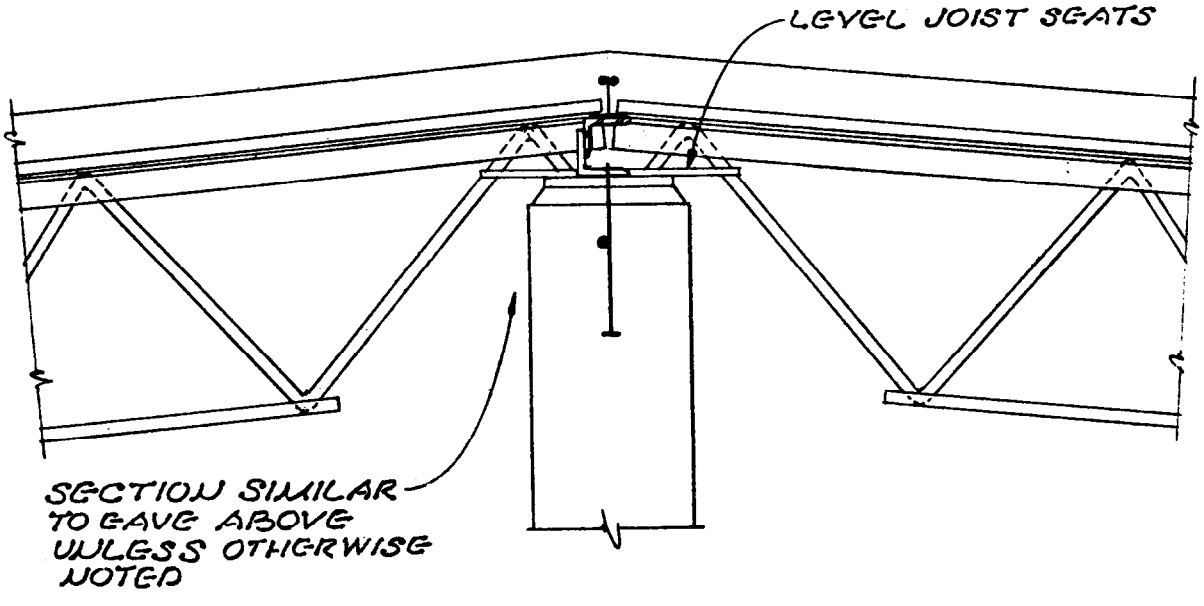

DETAIL B
RIDGE

Figure 5–15. Continued.

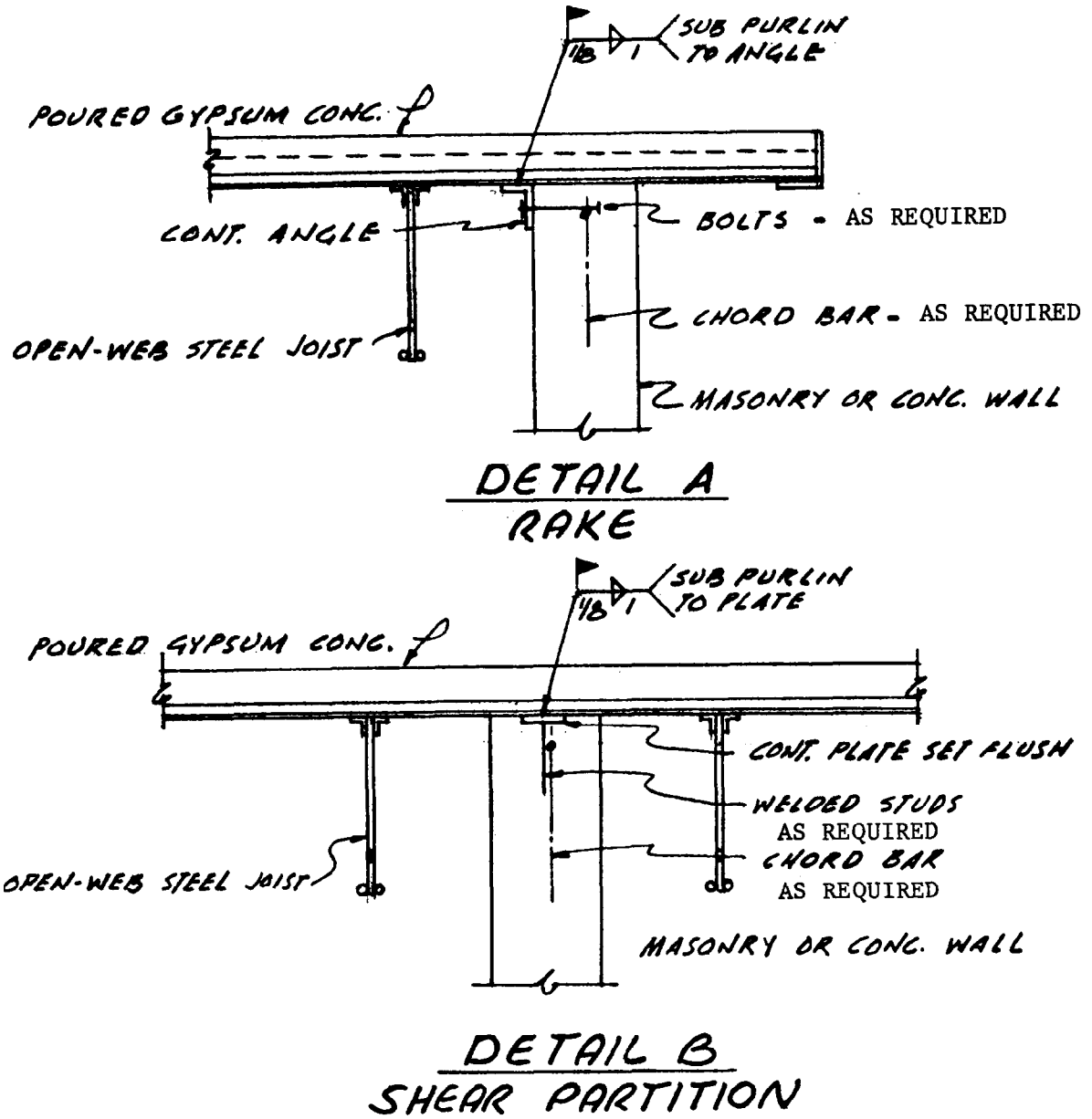

Figure 5-15. Continued.

before coating with paint or galvanizing shall be in accordance with the following table. The thickness of the uncoated steel shall not at any location be less than 95% of the design thickness.

Gauge	*Design Thickness*	*Minimum Thickness*
22	0.0295	0.028
20	0.0358	0.034
18	0.0474	0.045
16	0.0598	0.057

b. Type A diaphragms—decks having shear transfer elements directly attached to framing. Multiple-plate steel decks with the flat element adjacent to framing members and single-plate steel decks fall into this category of diaphragms when each deck unit is attached to the framing by at least two puddle welds or equivalent fasteners, as described in figure 5-16. Thicknesses t_1, t_2, and t_s will not be less than 22 gauge. Seam attachments will be made at least at midspan of L_v, but the spacing of attachments between supports will not exceed 3 feet on center. Typical details of Type A diaphragms and attachments are shown in figure 5-18.

(2) *Shear capacity.* The working shear will be limited to that determined by the following formulas–

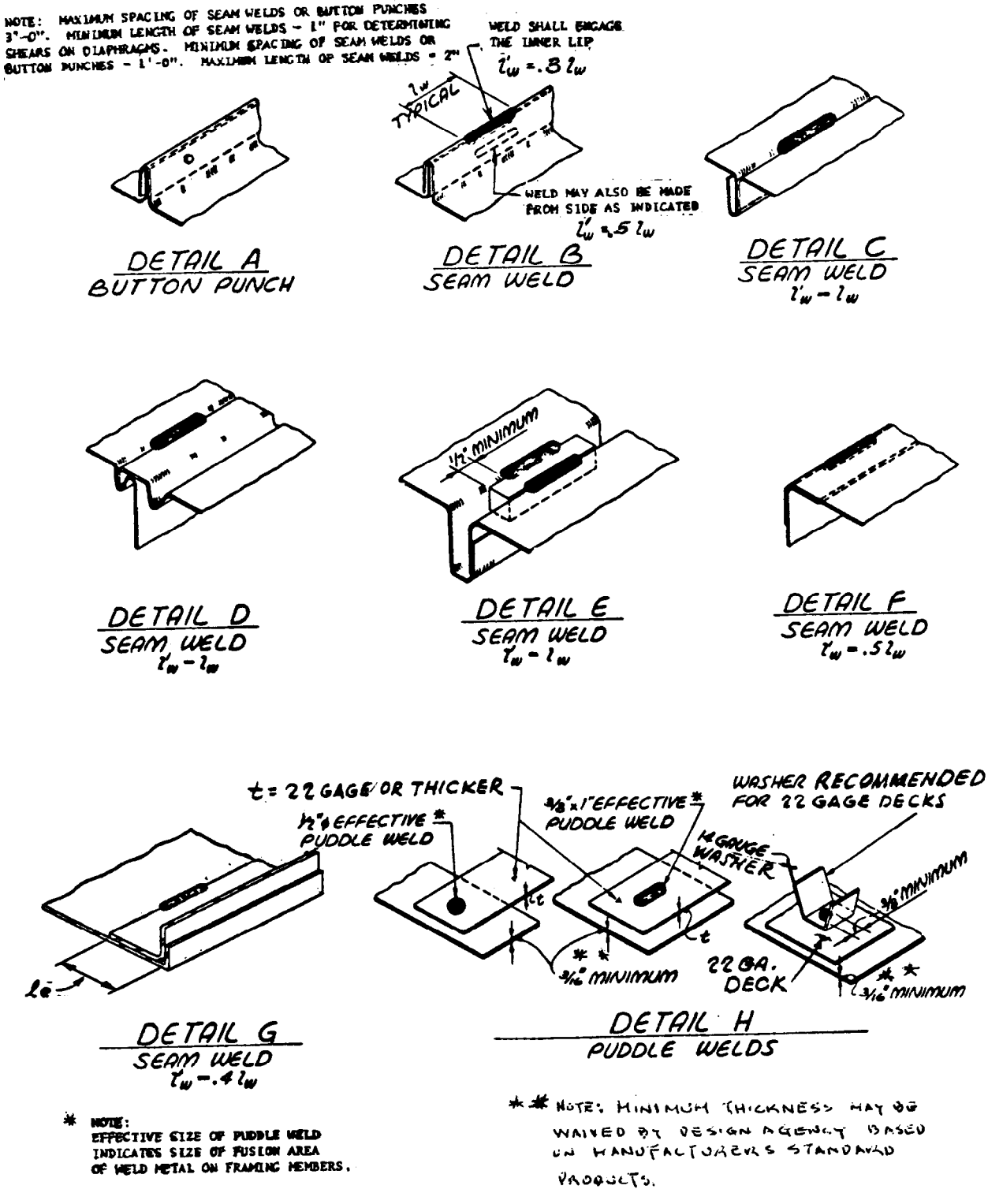

Figure 5-16. Steel deck diaphragms–typical details of fastenings.

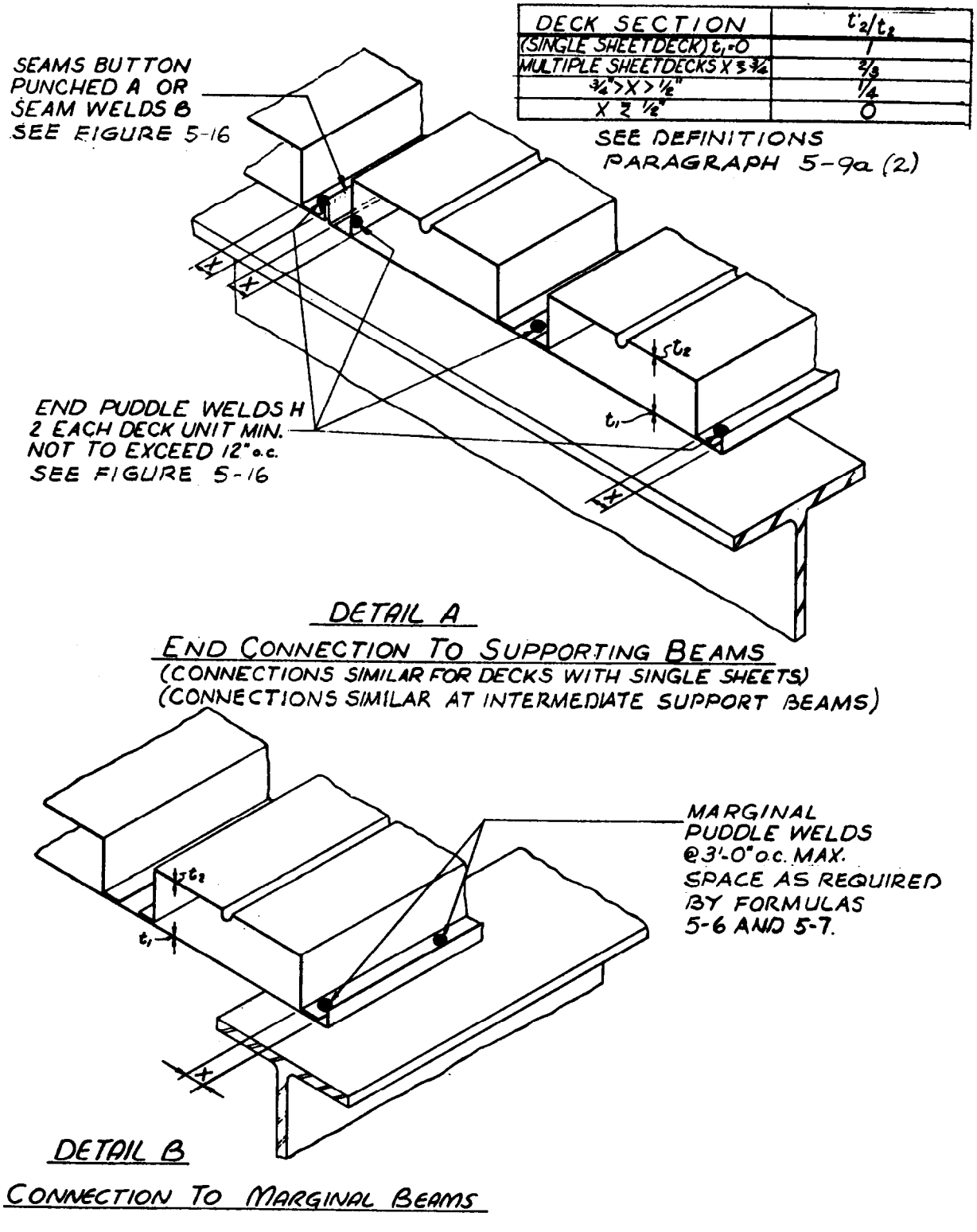

Figure 5-17. Steel deck diaphragms Type A–typical attachments.

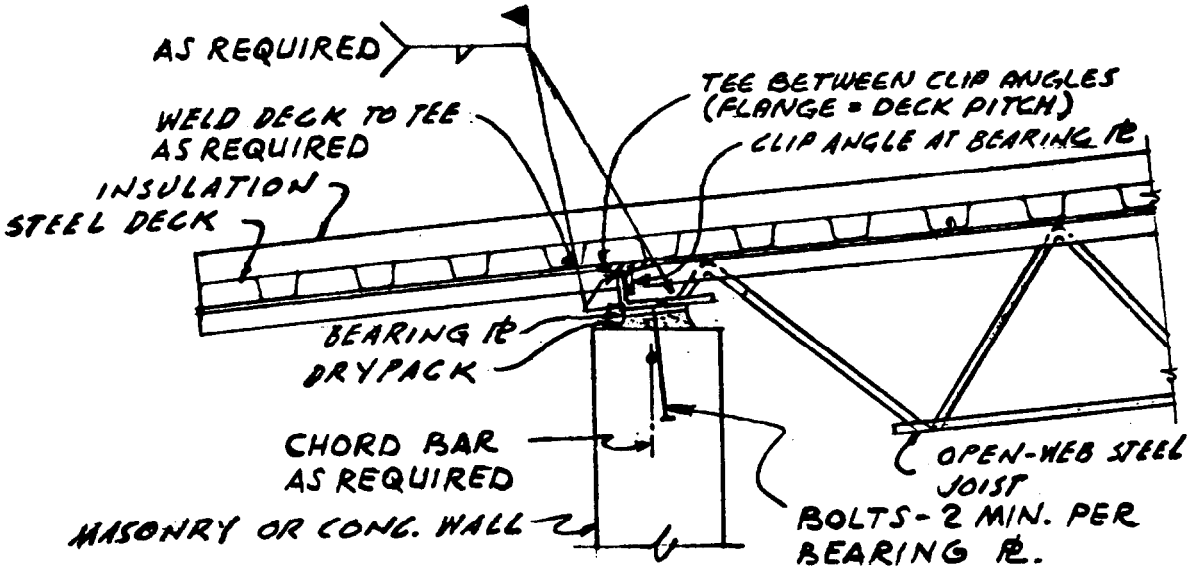

DETAIL A
EAVE

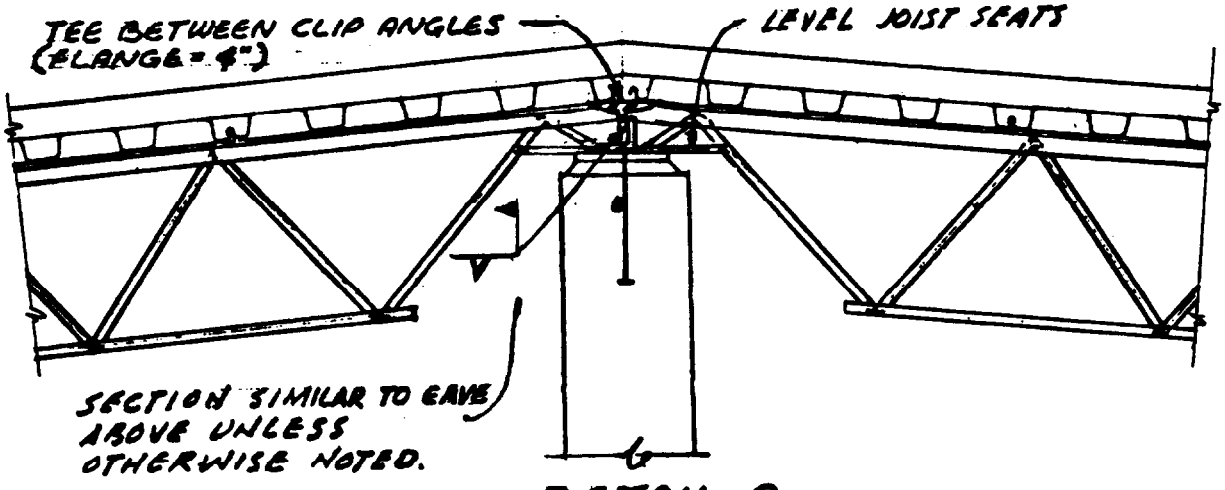

DETAIL B
RIDGE

Figure 5-18. Steel deck diaphragms Type A–typical details with open-web joists.

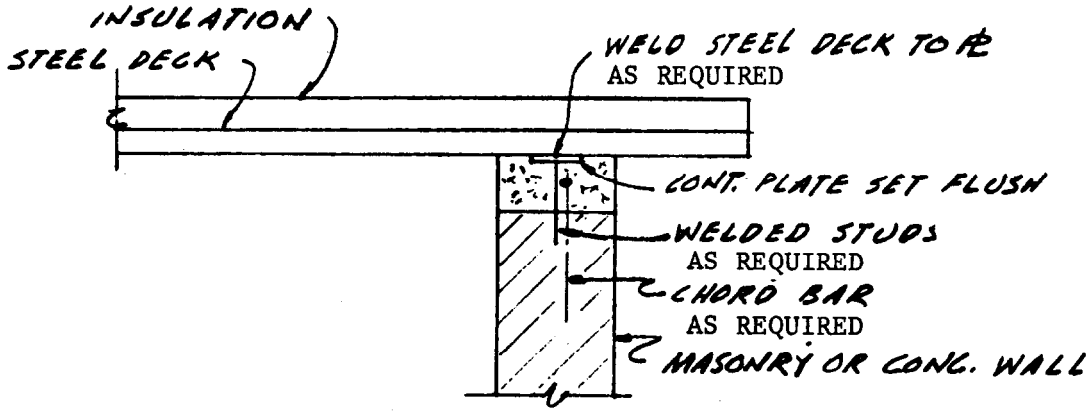

DETAIL A
RAKE

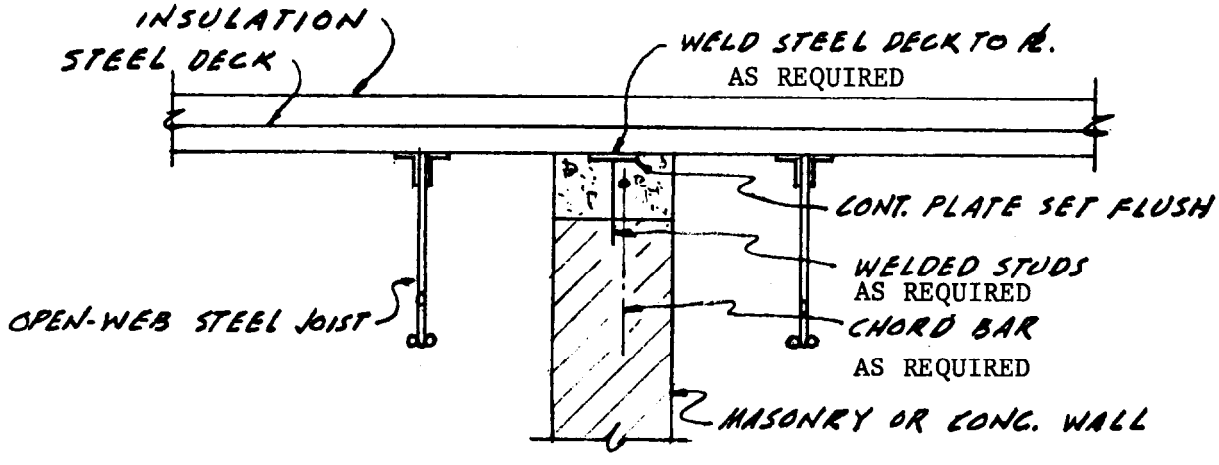

DETAIL B
TRANSVERSE SHEAR WALL

Figure 5-18. Continued

$$q_D = (q_1 + q_2) \qquad \text{(eq 5-8)}$$

where $q_3/q_2 < C_1$, but q_D is not to exceed

$$\frac{I_x x 10^6}{2L_v^2} \qquad \text{(eq 5-9)}$$

nor

$$\frac{10^4}{1.5\sqrt{L_v(F_1+F_2+\frac{F_3L_2}{12})}} \qquad \text{(eq 5-10)}$$

Equation 5-10 applies only when $1_e < ½$ inch; refer to Detail G in figure 5-16.

$$q_1 = \frac{92S(t_1+t_2')K}{bL_v} \qquad \text{(eq 5-11)}$$

where

$$K = \frac{1{,}000}{\left[1+S\left[\frac{1}{\frac{(t_1+t_2)\,t_1}{t_2^2}+100n^{1/4}t_2^2\sqrt{\frac{43}{h}}\left(\frac{t_2}{t_1+t_2}\right)^3}\right]^2\right]^{1/2}} \qquad \text{(eq 5-12)}$$

$$q_2 = \frac{abt_s^{1/4}C_2}{2}\left[q_1\left[\frac{500}{I_D}+\frac{1}{L_v dS(t_1+t_2')^2}\right]\right]^{1/4} \qquad \text{(eq 5-13)}$$

$$q_3 = \frac{3600t_sC_3}{L_v} \qquad \text{(eq 5-14)}$$

(2) Flexibility factor. The flexibility factor, F, will be determined by the following formulas:

$$F = F_1+F_2+F_3 \qquad \text{(eq 5-15)}$$

where

$$F_1 = \frac{1}{12(t_1+t_2)} \qquad \text{(eq 5-16)}$$

$$F_2 = \frac{bL_v^2C_4}{160}\left[\frac{500}{I_D}+\frac{1}{L_v dS(t_1+t_2)^2}\right]\frac{q_1}{q_1+q_2} \qquad \text{(eq 5-17)}$$

$$F_3 = \frac{R}{L_v\left(t_1+\frac{12.5n^2C_1^2t_2^3}{h}\right)} \qquad \text{(eq 5-18)}$$

The flexibility of these diaphragms will vary within a wide range. Arrangements can be used

that fall into the semirigid, semiflexible, and flexible categories.

(3) sample calculations and tables. Summaries of allowable shear (q_d) and flexibility factors (F) for some of the more common cross sections are shown in figure 5-19. Sample calculations using the formulas for these cross sections are given in figure 5-20.

TABLE OF ALLOWABLE SHEAR (q_D) AND FLEXIBILITY FACTOR (F)

SECTION	Welds *	SEAM FASTENING	GAGE		SPAN (L_V) 4'-0"	5'-0"	6'-0"	7'-0"	8'-0"	9'-0"	10'-0"
1. 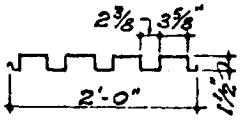	3	BUTTON PUNCH @ 24" o.c. **	16	q_D	1260	1030	870	760	680	620	560
				F	5.7+ 14.7R	7.0+ 27.8R	8.3+ 23.1R	9.6+ 19.8R	11+ 17.4R	12+ 15.4R	14+ 13.9R
			18	q_D	900	740	630	550	500	450	410
				F	8.1+ 67.8R	9.9+ 54.2R	12+ 45.2R	13+ 38.7R	15+ 33.9R	17+ 30.1R	19+ 27.1R
			20	q_D	520	430	370	320	290	260	240
				F	13+ 161R	15+ 129R	18+ 107R	21+ 91.9R	23+ 80.4R	26+ 71.4R	28+ 64.3R
			22	q_D	340	280	240	210	190	180	160
				F	17+ 278R	20+ 222R	23+ 185R	27+ 159R	30+ 139R	32+ 123R	35+ 111R
2. 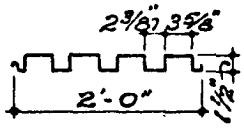	5	BUTTON PUNCH @ 24" o.c. **	16	q_D	1650	1340	1130	980	870	790	720
				F	5.0+ 8.68R	6.1+ 6.94R	7.3+ 5.79R	8.5+ 4.96R	9.8+ 4.34R	11+ 3.86R	13+ 3.47R
			18	q_D	1220	990	840	730	660	580	520
				F	7.1+ 17.0R	8.6+ 13.6R	10+ 11.3R	12+ 9.69R	14+ 8.48R	15+ 7.54R	17+ 6.78R
			20	q_D	700	560	470	410	360	320	290
				F	11+ 40.2R	13+ 32.1R	16+ 26.8R	18+ 23.0R	21+ 20.1R	23+ 17.9R	26+ 16.1R
			22	q_D	450	370	310	270	240	220	200
				F	15+ 69.4R	18+ 55.5R	21+ 46.3R	24+ 39.7R	27+ 34.7R	30+ 30.9R	32+ 27.8R
3. 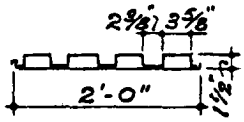	3	BUTTON PUNCH @ 24" o.c. **	18-18	q_D	1363	1265	1068	927	822	741	676
				F	3.1 + 4.84R	3.8 + 3.87R	4.6 + 3.22R	5.5 + 2.76R	6.5 + 2.42R	7.5 + 2.15R	8.6 + 1.93R
			16-16	q_D	1968	1590	1340	1161	1028	925	842
				F	2.2 + 3.72R	2.8 + 2.98R	3.4 + 2.48R	4.1 + 2.13R	4.8 + 1.86R	5.6 + 1.65R	6.5 + 1.49R
			16-18	q_D	1911	1545	1302	1129	1000	900	820
				F	2.5 + 3.93R	3.1 + 3.14R	3.8 + 2.62R	4.5 + 2.24R	5.3 + 1.96R	6.1 + 1.74R	7.0 + 1.57R
			20-20	q_D	1168	948	792	673	585	517	463
				F	4.7 + 6.68R	5.8 + 5.34R	7.0 + 4.45R	8.3 + 3.82R	9.7 + 3.34R	11.1 + 2.97R	12.6 + 2.67R
4. 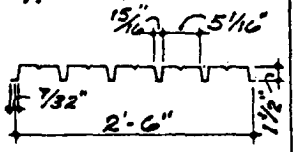	6	1 1/2" SEAM WELD @ 18" o.c.	18	q_D	990	890	820	760	710	680	650
				F	5.7+ 17.0R	5.5+ 13.6R	5.4+ 11.3R	5.3+ 9.68R	5.2+ 8.47R	5.1+ 7.53R	5.0+ 6.78R
			20	q_D	710	640	590	550	520	490	460
				F	8.5+ 40.2R	8.1+ 32.1R	7.8+ 26.8R	7.6+ 23.0R	7.3+ 20.1R	7.1+ 17.9R	6.9+ 16.1R
			22	q_D	480	420	380	350	330	310	300
				F	11+ 69.4R	10+ 55.5R	9.7+ 46.3R	9.3+ 39.7R	8.9+ 34.7R	8.6+ 30.9R	8.3+ 27.8R

5. See Figure 5-19, sheet 2 of 2

** SEAM WELDS ARE PREFERABLE.

*Number of welds at end and at intermediate support beams.

NOTE:
THE GAGES FOR MULTIPLE SHEET DECKS ARE DESIGNATED WITH THE GAGE OF THE FLAT SHEET FIRST AND FLUTED SHEET SECOND.

Figure 5–19. Steel deck diaphragm Type A–allowable shears and flexibility factors.

TABLE OF ALLOWABLE SHEAR (q_D) AND FLEXIBILITY FACTOR (F)

SECTION	END WELDS	SEAM FASTENING	GAGE		SPAN (L_V) 4'-0"	5'-0"	6'-0"	7'-0"	8'-0"	9'-0"	10'-0"	11'-0"	12'-0"	13'-0"
5. 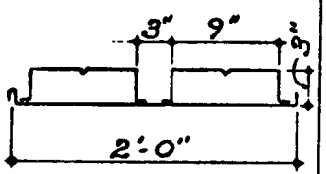	3	BUTTON PUNCH @ 24" o.c.	18-18	q_D	1180	960	810	710	630	570	520	480	450	420
				F	3.0+ 5.01R	3.7+ 4.01R	4.5+ 3.34R	5.4+ 2.87R	6.3+ 2.51R	7.3+ 2.23R	8.3+ 2.01R	9.3+ 1.82R	10.4+ 1.67R	11.6+ 1.54R
			16-16	q_D	1480	1200	1010	880	780	700	640	590	550	520
				F	2.1+ 3.93R	2.6+ 3.14R	3.2+ 2.62R	3.8+ 2.25R	4.5+ 1.97R	5.2+ 1.75R	5.9+ 1.57R	6.7+ 1.43R	7.5+ 1.31R	8.4+ 1.21R
			18-16	q_D	1160	940	800	690	620	560	510	470	440	410
				F	2.5+ 4.84R	3.1+ 3.87R	3.8+ 3.22R	4.5+ 2.77R	5.3+ 2.42R	6.2+ 2.15R	7.0+ 1.94R	7.9+ 1.76R	8.9+ 1.61R	9.9+ 1.49R
			16-18	q_D	1510	1230	1040	900	800	720	660	610	570	530
				F	2.5+ 4.04R	3.1+ 3.23R	3.7+ 2.69R	4.4+ 2.31R	5.1+ 2.02R	5.9+ 1.80R	6.7+ 1.62R	7.6+ 1.47R	8.5+ 1.35R	9.4+ 1.24R

NOTE:

THE GAGES FOR MULTIPLE SHEET DECKS ARE DESIGNATED WITH THE GAGE OF THE FLAT SHEET FIRST AND FLUTED SHEET SECOND.

Figure 5–19. Continued.

SAMPLE CALCS. NO. 1 FOR TYPE A DIAPHRAGM.

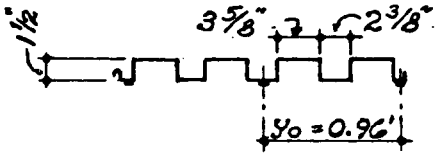

20 GAGE SINGLE PLATE DECK, BUTTON PUNCH SEAMS @ 24" o.c., 3 END WELDS

$t_1 = 0$

$t_2 = t_2' = t_s = 0.036''$

$S = \frac{\Sigma y^2}{y_o} = \frac{2 \times .96^2}{.96} = 1.92'$

$I_x = .23$

$b = 2'$ $\quad h = 1.5''$

$L_v = 10'\text{-}0''$ $\quad a = L_v/2$

$n = 4/2 = 2$ $\quad d = 1.92 = 2y_o$

$I_D = 68$

$C_1 = C_2 = C_3 = C_4 = 1$

$$q_o = (q_1 + q_2)\frac{q_3}{q_2} \qquad \text{(PARA. 5-9b)}$$

$$q_1 = \frac{92\,S(t_1 + t_2')K}{b L_v}$$

$$q_2 = \frac{a b t_s^{1/2} C_2}{2}\left\{q_1\left[\frac{500}{I_D} + \frac{1}{L_v d S(t_1+t_2')^2}\right]\right\}^{1/2}$$

$$K = \frac{1000}{\left\{1 + S\left[\frac{1}{\frac{(t_1+t_2)t_1}{t_2^2} + 100n^{1/2}t_2^2\sqrt{\frac{43}{n}}\left(\frac{t_2}{t_1+t_2}\right)^3}\right]^2\right\}^{1/2}}$$

$$q_3 = \frac{3600\,t_s\,a\,C_3}{L_v}$$

$$K = \frac{1000}{\left\{1 + 1.92\left[\frac{1}{100\sqrt{2}\,(.036)^2\sqrt{\frac{43}{1.5}}}\right]^2\right\}^{1/2}} = \frac{1000}{1.73} = 578$$

$$q_1 = \frac{92 \times 1.92 \times .036 \times 578}{2 \times 10} = 184$$

$$q_2 = \frac{5 \times 2\sqrt{.036}}{2}\left\{184\left[\frac{500}{68} + \frac{1}{10 \times 1.92 \times 1.92 \times (.036)^2}\right]\right\}^{1/2}$$

$$= .945\sqrt{5250} = 68.4$$

$$q_3 = \frac{3600 \times .036 \times 5}{10} = 64.8 \qquad \frac{q_3}{q_2} = \frac{64.8}{68.4} = 0.95$$

$$q_o = (184 + 68.4).95 = 240$$

$$\frac{I_x \times 10^6}{2L_v^2} = \frac{.23 \times 10^6}{2 \times 10^2} = 1150 > 240 \ \underline{\text{O.K.}}$$

$q_o = 240$ (FIGURE 5-19: $L_v = 10'$, 20 ga.)

$$F = F_1 + F_2 + F_3$$

$$F_1 = \frac{1}{12(t_1+t_2)} = \frac{1}{12 \times .036} = 2.32$$

$$F_2 = \frac{b L_v^2 C_4}{160}\left[\frac{500}{I_D} + \frac{1}{L_v d S(t_1+t_2')^2}\right]\frac{q_1}{q_1+q_2} = \frac{2 \times 100}{160}\left[7.35 + 21.1\right]\frac{184}{252.4} = 25.9$$

$$F_3 = \frac{R}{L_v\left(t_1 + \frac{12.5n^2t_2^3C_1^2}{n}\right)} = \frac{R}{10\left(\frac{12.5 \times 4 \times .036^3}{1.5}\right)}$$

$$= \frac{R}{10 \times .00156} = 64R'$$

$$F = 2.32 + 25.9 + 64R = 28.2 + 64R$$

(SEE FIGURE 5-19: $L_v = 10'$, 20 ga.)

Figure 5-20. Steel deck diaphragm Type A–sample calculation.

SAMPLE CALC. NO. 2 FOR TYPE A DIAPHRAGM

18 GAGE SINGLE PLATE DECK.
BUTTON PUNCH SEAMS @ 24" o.c.
5 END WELDS
L_v - 9'-0"

$$K = \frac{1000}{\left\{1 + 2.44\left[\frac{1}{100 \times 2(.048)^2\sqrt{\frac{43}{1.5}}}\right]^2\right\}^{1/2}} = \frac{1000}{1.18} = 845$$

$$q_1 = \frac{92 \times 2.44 \times .048 \times 845}{2 \times 9} = 505$$

$$q_2 = \frac{9 \times .048^{1/2}}{2}\left\{505\left[\frac{500}{91} + \frac{1}{9 \times 1.92 \times 2.44(.048)^2}\right]\right\}^{1/2} = 87.9$$

$$q_3 = \frac{3600 \times .048 \times 4.5}{9} = 86.5 \qquad \frac{q_3}{q_2} = \frac{86.5}{87.9} = .985$$

$$q_D = (505 + 87.9) \cdot .985 = \underline{584}$$

$$\frac{I_x \times 10^6}{2L_v^2} = \frac{.34 \times 10^6}{2 \times 9^2} = 2099 > 584 \ \underline{\text{O.K.}}$$

q_D = 580 (FIGURE 5-19 : L_V = 9', 18 ga.)

$$F_1 = \frac{1}{12 \times .048} = 1.74$$

$$F_2 = \frac{2 \times 9^2}{160}(15.8)\frac{505}{592.9} = 13.7$$

$$F_3 = \frac{R}{9\left(\frac{12.5 \times 16(.048)^3}{1.5}\right)} = \frac{R}{9 \times .0147} = 7.55R$$

$$F = 1.74 + 13.7 + 7.55R = \underline{15.4 + 7.6R}$$

(SEE FIGURE 5-19 : L_V = 9', 18 ga.)

$t_1 = 0$
$t_2 = t_2' = t_3 = .048"$
$S = \frac{\Sigma y^2}{y_0} = \frac{2 \times .96^2 + 2 \times .50^2}{.96} = 2.44$

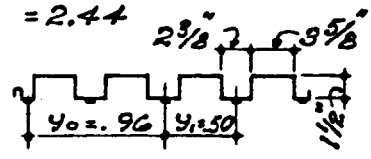

$b = 2'$ $\quad h = 1.5"$
$L_v = 9'$ $\quad I_x = .34$
$n = 8/2 = 4$ $\quad a = L_v/2$
$I_D = 91$ $\quad d = 1.92 \cdot 240$
$C_1 = C_2 = C_3 = C_4 = 1$

Figure 5-20. Continued.

c. Type B diaphragms. These are decks having an elevated plate of shear transfer. Multiple steel decks with fluted elements adjacent to framing members and single-plate steel decks with fluted elements incapable of being welded to framing with at least two puddle welds or equivalent fasteners per unit fall into this category of diaphragm. This type of diaphragm has only welded seam attachments. The units will be composed of sheets not less than 20 gauge. Seam attachment spacing will not exceed 3 feet on center. Typical details of Type B diaphragms and attachments are shown in Figure 5-21.

(1) *Shear capacity. The* working shear will be limited to that determined by the following formulas–

$q_D = q_3$, q_4, or q_5 whichever is lesser, but not to exceed 1,050 pounds per foot. (eq 5-19)

$$q_3 = \frac{0.6\, t_2^2 a l'_w}{L_v} \qquad \text{(eq 5-20)}$$

$$q_4 = \frac{t_s}{10}\left(\frac{1}{a_s}\right)^2 \times 10^6 \qquad \text{(eq 5-21)}$$

$$q_5 = \frac{c_5 t_c^2 \times 10^6}{2h^{1/2}}$$

$$F = F_1 + F_4 + F_5 \qquad \text{(eq 5-23)}$$

where

$$F_1 = \frac{1}{12(t_1 + t_2)} \qquad \text{(eq 5-24)}$$

$$F_5 = \frac{20{,}000}{L_R q_5} \qquad \text{(eq 5-25)}$$

(eq 5-26)

These diaphragms will fall into the semirigid and semiflexible categories.

SAMPLE CALCS. NO.3 FOR TYPE A DIAPHRAGM

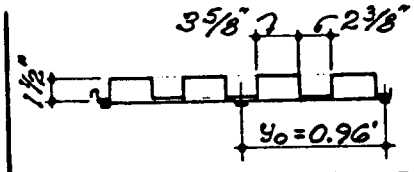

16-18 GAGE MULTIPLE PLATE DECK, BUTTON PUNCH SEAMS @ 24" o.c., 3 END WELDS.

$t_1 = 0.060 \quad t_2' = 2/3 \times .048 = .032$

$S = \frac{\Sigma y^2}{y_0} = \frac{2 \times .96^2}{.96} = 1.92$

$I_x = .603$

$b = 2' \qquad h = 1.5$

$L_v = 8'\text{-}0" \qquad a = L_v/2$

$n = \frac{4}{2.0'} = 2 \qquad d = 1.92 = 2y_0$

$I_D = 155$

$C_1 = C_2 = C_3 = C_4 = 1$

$$q_3 = \frac{3600 \times .060 \times 4}{8} = 108$$

$$\frac{q_3}{q_2} = \frac{108}{79.6} = > 1$$

(NOTE: q_2 COMPUTED BELOW)

$$K = \frac{1000}{\left\{1 + 1.92\left[\frac{1}{\frac{(.060+.048)(.060)}{(.048)^2} + 100 \times \sqrt{2} \times (.048)^2 \sqrt{\frac{43}{1.5}}\left(\frac{.048}{.048+.06}\right)^3}\right]^2\right\}^{1/2}}$$

$$= \frac{1000}{1.1} = 910$$

$$q_1 = \frac{92 \times 1.92 \times .092 \times 910}{2 \times 8} = 920$$

$$q_2 = \frac{8 \times .060^{1/2}}{2}\left\{920\left[\frac{500}{155} + \frac{1}{8 \times 1.92 \times 1.92 (.092)^2}\right]\right\}^{1/2} = 79.6$$

$$q_0 = 920 + 79.6 = 999.6$$

$$\frac{I_x \times 10^6}{2 L_v^2} = \frac{.603 \times 10^6}{2 \times 8^2} = 4711 > 999.6 \ \underline{\underline{\text{O.K.}}}$$

$q_0 = 1000$ (FIGURE 5-19: $L_V = 8'$, 16-18 ga.)

$$F_1 = \frac{1}{12 \times .108} = 0.77$$

$$F_2 = \frac{2 \times 64}{160}(6.13)\frac{920}{999.6} = 4.51$$

$$F_3 = \frac{R}{8\left[.060 + \left(\frac{12.5 \times 4 \times .048^2}{1.5}\right)\right]} = \frac{R}{8 \times .0637} = 1.96R$$

$$F = 0.77 + 4.51 + 1.96R = 5.3 + 1.96R$$

(FIGURE 5-19: $L_V = 8'$, 16-18 ga.)

Figure 5-20. *Continued*

SAMPLE CALCS. NO.4 FOR TYPE A DIAPHRAGM

$$K = \frac{1000}{\left\{1+3.5\left[\frac{1}{100\times 2(.048)^2\sqrt{\frac{43}{1.5}}}\right]^2\right\}^{1/2}} = 796$$

$$q_1 = \frac{92\times 3.5\times .048\times 796.0}{2.5\times 5} = 984.2$$

$$q_2 = \frac{3.33\times 2.5\times .048^{1/2}\times 5.26}{2}\left\{984.2\left[\frac{500}{189}+\frac{1}{5\times 2.5\times 3.5\times .048^2}\right]\right\}^{1/2} = 535$$

$$q_3 = \frac{3600\times .048\times 3.33\times 4.32}{5} = 497.2$$

$$\frac{q_3}{q_2} = \frac{497.2}{535} = .93$$

$$q_D = (984.2+535).93 = 1413$$

$$\frac{I_x\times 10^6}{2L_v^2} = \frac{.212\times 10^6}{2\times 5^2} = 4240 > 1413 \ \underline{\text{O.K.}}$$

$$F_1 = \frac{1}{12\times .048} = 1.74$$

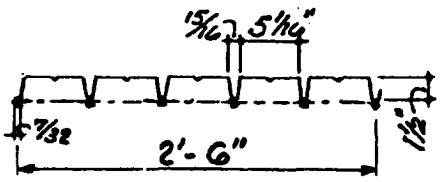

18 GAGE SINGLE PLATE DECK, 1 1/2" WELDED SEAMS @ 18" o.c.
6 END WELDS

$t_1 = 0$

$t_2 = t_2' = t_s = .048$

$$S = \frac{\Sigma y^2}{y_o} = \frac{2\times .25^2+2\times .75^2+2\times 1.25^2}{1.25} = 3.5$$

$I_x = .212$

$b = 2.5$ $\quad h = 1.5$

$L_v = 5'$ $\quad a = 5/1.5 = 3.33$

$M = \frac{10}{2.5} = 4$ $\quad d = 2.5 = 2y_o$

$I_D = 189$ $\quad l_w' = 4l_w = 4\times 1.5 = .6$

$C_1 = 1$

$C_2 = 40t_s^{1/2}l_w' = 40\times .048^{1/2}\times .6 = 5.26$

$C_3 = 150t_s\, l_w' = 150\times .048\times .6 = 4.32$

$C_4 = 6/L_v = 6/5 = 1.2$

$$F_2 = \frac{2.5\times 5^2\times 1.2}{160}\left[\frac{500}{189}+\frac{1}{5\times 2.5\times 3.5\times .048^2}\right]\frac{984.2}{984.2+535} = 3.84$$

$$F_3 = \frac{R}{5\left(\frac{12.5\times 16\times .048^3}{1.5}\right)} = 13.6R$$

$F = 1.74+3.84+13.6R = 5.58+13.6R$

(FIGURE 5-19 : $L_v = 5'$, 18 ga.)

$$q_D = \frac{10^4}{1.5\sqrt{5\left(5.58+\frac{13.6\times 5}{12}\right)}} = 889.0 < 1413$$

$q_D = 890$ (FIGURE 5-19 : $L_v = 5'$, 18 ga.)

Figure 5-20. Continued.

d. Steel decks with concrete fill. This type of diaphragm is composed of a galvanized steel deck with a superimposed fill of concrete having a minimum f'_c of 2,500 psi at 28 days and a minimum weight of 90 pounds per cubic foot. Minimum concrete fill over the deck will be 2½ inches. Temperature reinforcement will be used in the fill with the minimum 6x6-W1.4xW1.4 welded wire fabric. Steel decks less than 1% inches in depth do not qualify as diaphragms; thus only the concrete is considered as the diaphragm, per paragraph (1) below. To satisfy the anchorage requirements of paragraph *5–7b,* positive interlocking between the steel deck and the concrete can be achieved by either deck embossments or indentations, transverse wires attached to the deck corrugations, holes placed in the corrugations, or deck profile in which the fluted elements are placed up so that the fill is keyed with the deck. If interlocking between the deck and the concrete is not achieved, then mechanical anchorages will be required to anchor the fill to the supporting member, as prescribed in paragraph *5–7b(2).*

(1) *Concrete as a diaphragm. If* the diaphragm is loaded and reacted without shear stresses passing through the deck or its attachments, the diaphragm is a concrete diaphragm as described in paragraph 5-7. Typical attachment details are shown in figure 5–22, details A and B.

(2) Steel *deck as a diaphragm.*

(a) Shear capacity. If the diaphragm shears pass through the deck and its attachments, the

SAMPLE CALCS. NO. 5 FOR TYPE A DIAPHRAGM

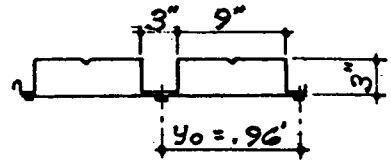

16-18 GAGE MULTIPLE PLATE DECK, BUTTON PUNCH SEAMS @ 24" o.c. 3 END WELDS.

$t_1 = t_3 = .060$

$t_2 = .048 \quad t_2' = 1/4 \times .048 = .012$

$S = \frac{\Sigma y^2}{y_o} = \frac{2 \times .96^2}{.96} = 1.92$

$I_x = 2.35$

$b = 2' \qquad h = 3$

$L_v = 10' \qquad a = L_v/2$

$n = \frac{4}{2.0'} = 2 \qquad d = 1.92 = 2y_o$

$I_D = 160$

$C_1 = C_2 = C_3 = C_4 = 1$

$$q_3 = \frac{3600 \times .060 \times 5}{10} = 108$$

$$\frac{q_3}{q_2} = \frac{108}{84.6} = > 1.0$$

(NOTE: q_2 COMPUTED BELOW)

$$K = \frac{1000}{\left\{1 + 1.92\left[\frac{1}{2.81 + (.326 \times 3.78 \times .0882)}\right]^2\right\}^{1/2}} = \frac{1000}{\sqrt{1 + .226}} = \frac{1000}{1.107} = 904$$

$$q_1 = \frac{92 \times 1.92\,(.072)\,904}{2 \times 10} = 575$$

$$q_2 = \frac{10 \times .060^{1/2}}{2}\left[575\left(\frac{500}{160} + \frac{1}{10 \times 1.92 \times 1.92\,(.072)^2}\right)\right]^{1/2} = 84.6$$

$$q_D = (575 + 84.6)\,1.0 = 659.6$$

$$\frac{I_x \times 10^6}{2L_v^2} = \frac{2.35 \times 10^6}{2 \times 10^2} = 11750 > 659.6 \quad \underline{\text{O.K.}}$$

$q_D = 660$ (FIGURE 5-19 : $L_V = 10'$, 16-18 ga.)

$$F_1 = \frac{1}{12 \times .108} = 0.77$$

$$F_2 = \frac{2 \times 10^2}{160}(5.45) \times \frac{575}{660} = 5.94$$

$$F_3 = \frac{R}{10\left(.060 + \frac{12.5 \times 4\,(.048)^3}{3}\right)} = \frac{R}{10 \times .0618} = 1.62R$$

$$F = .77 + 5.94 + 1.62R = 6.71 + 1.62R$$

(FIGURE 5-19 : $L_V = 10'$, 16-18 ga.)

Figure 5-20. Continued.

working shear will be determined by the following formulas—

$$q_D = q_1 + q_6 \qquad \text{(eq 5-27)}$$

where

$$q_1 = \frac{92S(t_1 + t'_2)K}{b\,L_v} \qquad \text{(eq 5-28)}$$

$$q_6 = q6' + q6'' \qquad \text{(eq 5-29)}$$

where

$$q'_6 = \frac{t\mu^{1.5}\sqrt{f'_c}}{200} \qquad \text{(eq 5-30)}$$

and

$$q''_6 = 2\sqrt{\frac{Kb}{d(t + t'_2)}} \qquad \text{(eq 5-31)}$$

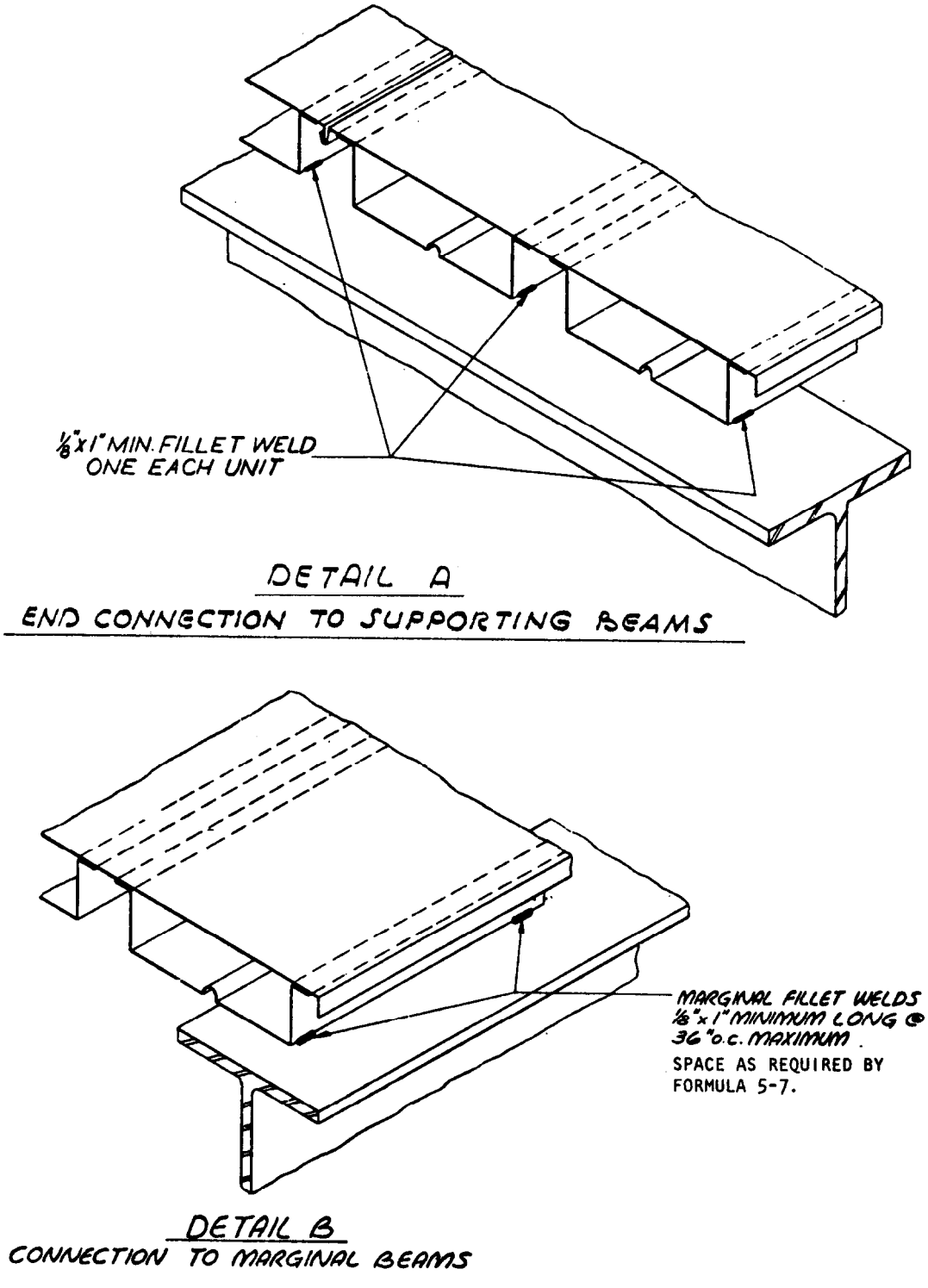

Figure 5–21. *Steel deck diaphragms Type B-typical attachments to frame.*

(b) *Flexibility factor. The* flexibility factor, F, will be determined by using the formula

$$F = \frac{20q''6}{b^2 q_D} \qquad \text{(eq 5-32)}$$

These diaphragms usually fall into the rigid category.

(c) *Sample calculation and table.* Typical attachment details are shown in figure 5–22, details C and D. A summary of allowable shears (q_d) and flexibilities (F) for a typical cross section is shown in figure 5–22, sheet 2. A solution to the formulas for a typical cross section of this type of diaphragm is given in figure 5-22, sheet 3.

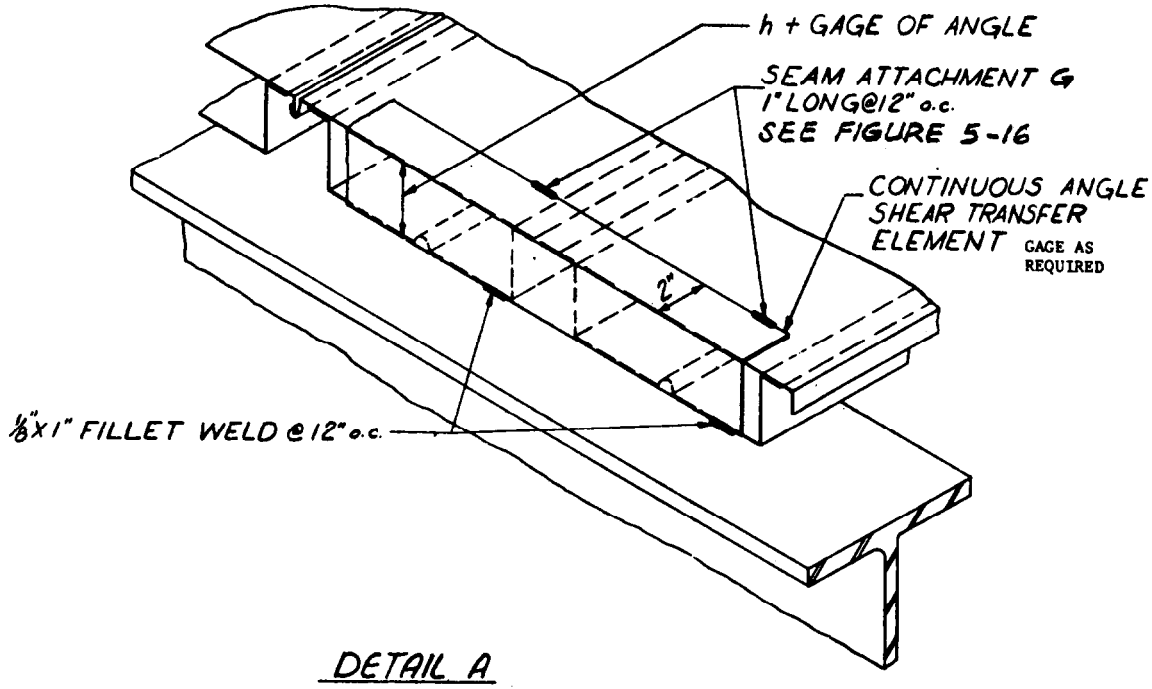

DETAIL A
CONTINUOUS ANGLE SHEAR TRANSFER ELEMENT

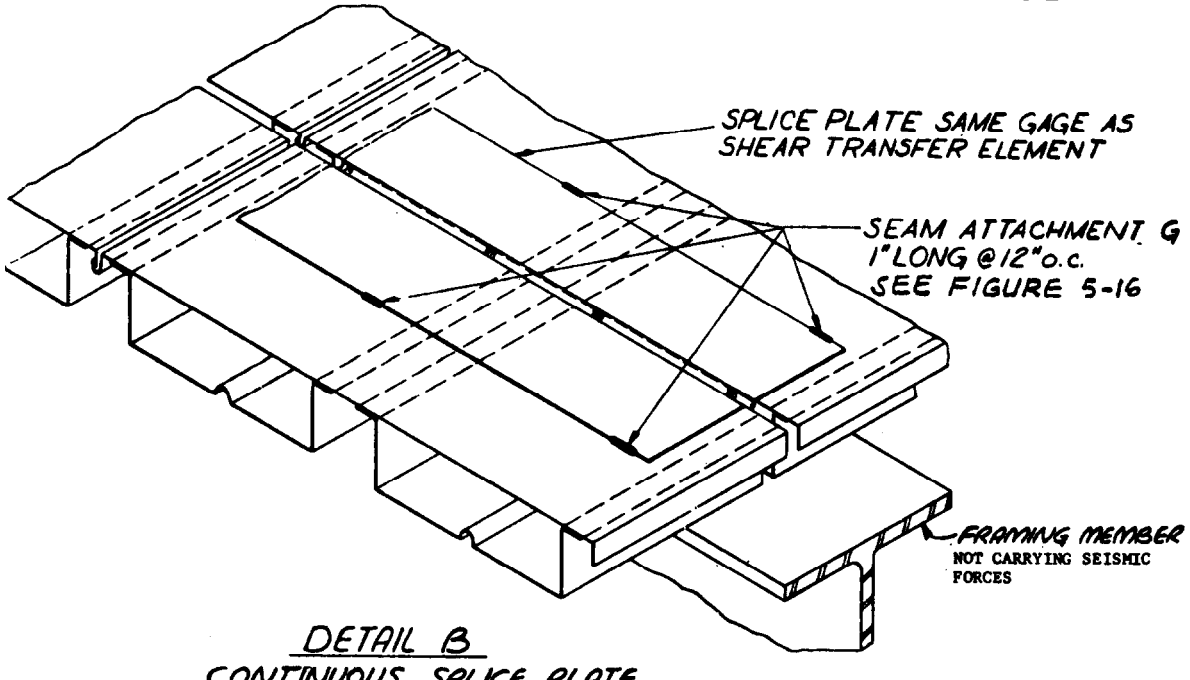

DETAIL B
CONTINUOUS SPLICE PLATE
(SEE SHEET 3 FOR CROSS SECTION)

Figure 5-21. Continued

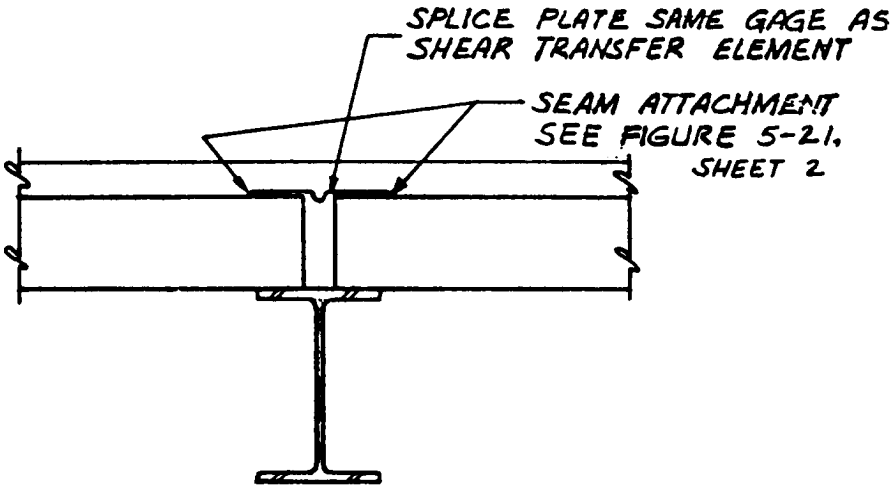

DETAIL C
SPLICE AT SUPPORT

Figure 5-21. Continued.

5-10. Wood diaphragms.

a. General design criteria. Wood diaphragms will be designed with reference to SEAOC lH2j, SEAOC Chapter 5, and the additional criteria of this section.

b. Wood diaphragms in concrete and masonry buildings. Refer to SEAOC 5C1d.

c. *Wood buildings with walls on three sides.* Provide for rotation as discussed in paragraph *5-3b(2).* Straight sheathing will not be used to resist shears in rotation. The depth of the diaphragm normal to the open side will not exceed 25 feet or two-thirds of the diaphragm width, whichever is the smaller depth.

d. Exceptions.

(1) One-story wood-frame structures with the depth normal to the open side not greater than 25 feet may have a depth equal to the width.

(2) Where calculations show that diaphragm deflections can be tolerated, the depth normal to the open end may be increased to a depth-to-width ratio not greater than 1½:1 for diagonal sheathing or 2:1 for special diagonally sheathed or plywood diaphragms.

e. Material requirements.

(1) *Straight sheathing.* Straight sheathing diaphragms will be constructed of 1- or 2-inch nominal boards, 6 or 8 inches nominal in width, with boards laid at right angles to the rafters or joists. Boards will be nailed to each rafter or joist and to peripheral blocking with two 8d common nails for l-inch by 6-inch and l-inch by 8-inch sheathing. For 2-inch sheathing, nails will be three 16d. End joints of adjacent boards will be separated by at least two joist or rafter spaces with at least two boards between joints on the same support. The diaphragm shear value will be as indicated in table 5–2. Diaphragms of this category will have a value of F in the order of 1,500 and will be considered very flexible. They will not be used for the lateral support of masonry, concrete, or other walls that would be seriously affected by high floor-to-floor deflection.

(2) *Diagonal sheathing. The* one-third increase usually permitted on working stresses in seismic design is not applicable to the working shears given in this subparagraph.

*(a) Conventional construction. These dia-*phragms will be made up of l-inch nominal sheathing boards laid at an angle of approximately 45 degrees to supports. Sheathing boards will be nailed directly to each intermediate bearing member with not less than two 8d nails for 1- by 6-inch boards and three 8d nails for boards 8 inches or wider, and in addition three 8d nails and four 8d nails will be used for 6-inch and 8-inch boards, respectively, at the diaphragm boundaries. End joints in adjacent boards will be separated by at least two joist or stud spaces, and there will be at least two boards between joints on the same support. The boundary or chord members at the edges of diaphragms will be designed to resist direct tensile and compressive chord stresses. Conventional wood diaphragms may be used to resist shears not exceeding 300 pounds per lineal foot of width. Two-inch nominal diagonally sheathed dia-

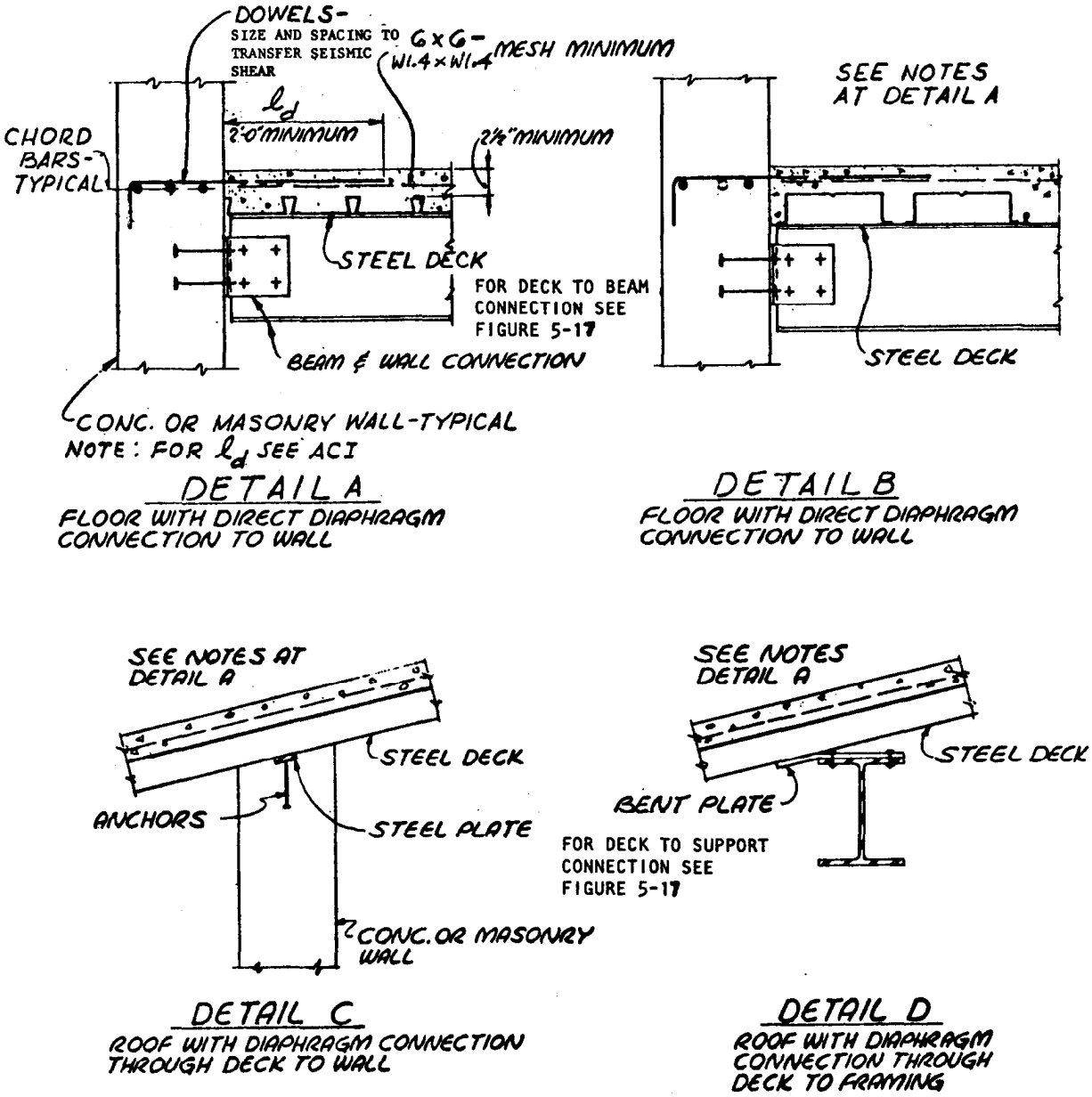

NOTE: WHEN DECKS ARE ATTACHED AT ALL SHEAR TRANSFER POINTS SIMILAR TO DETAILS A AND B, THE DIAPHRAGMS WILL BE DESIGNED IN ACCORDANCE WITH PARAGRAPH 5-7, CONCRETE DIAPHRAGMS. WHEN SHEAR TRANSFER IS THROUGH THE WELDS BETWEEN THE STEEL DECK AND FRAMING, THE DIAPHRAGM WILL BE DESIGNED IN ACCORDANCE WITH PARAGRAPH 5-9d(2), FORMULAS 5-27 and 5-32.

Figure 5-22. Steel deck diaphragms with concrete fill.

phragms may be used with a maximum design shear of 400 pounds per lineal foot if 16d common nails are used in lieu of the 8d nails specified for l-inch nominal sheathing. This category of diaphragms has a value of F of approximately 250 and will be considered very flexible; such diaphragms will not be used for the lateral support of masonry or concrete walls.

(b) Special construction. Special diagonally sheathed diaphragms will include two adjoining layers of l-inch nominal sheathing boards laid diagonally and at 90 degrees to each other. Special diagonally sheathed diaphragms also include single-layered diaphragms, conforming to conventional construction and which, in addition, will have all elements designed in conformance with the following provision: Each chord *or* portion thereof may be considered as a beam loaded with a

TABLE OF ALLOWABLE SHEAR (q_D) AND FLEXIBILTY FACTOR (F)

SECTION

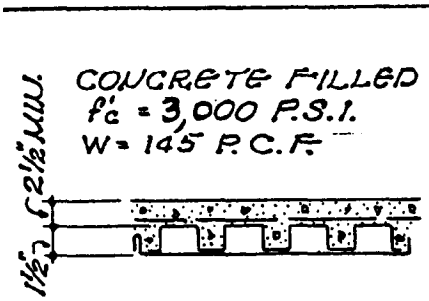

GAGE		SPAN (L_V) 4'-0"	5'-0"	6'-0"	7'-0"	8'-0"	9'-0"	10'-0"
20-20	q_D	2780	2510	2340	2210	2120	2040	1980
	F	.47	.53	.56	.59	.62	.66	.66
18-18	q_D	3190	2830	2600	2430	2300	2200	2130
	F	.36	.40	.44	.47	.50	.51	.53
16-16	q_D	3600	3160	2870	2660	2500	2380	2280
	F	.28	.32	.36	.38	.41	.43	.45
16-18	q_D	3440	3030	2760	2560	2420	2310	2220
	F	.31	.35	.38	.41	.44	.46	.48

NOTES:
1. BUTTON PUNCH @ 36" o.c.
2. THE GAGES FOR MULTIPLE SHEET DECKS ARE DESIGNATED WITH THE GAGE OF THE FLAT SHEET FIRST AND FLUTED SHEET SECOND.
3. DECK SECTIONS ARE MADE FROM GALVANIZED SHEETS
4. END WELDS CONSIST OF 3 PUDDLE WELDS AT EACH SUPPORT.

Figure 5-22. Continued,

uniform load per foot equal to 50 percent of the unit shear due to diaphragm action. The load will be assumed as acting normal to the chord in the plane of the diaphragm and either toward or away from the diaphragm. The span of the chord, or portion thereof, will be the distance between structural members of the diaphragm, such as joists or blocking, which serve to transfer the assumed load to the sheathing. Special diagonally sheathed diaphragms may be used to resist shears due to seismic forces, provided such shears do not stress the nails beyond their allowable safe lateral strength and do not exceed 600 pounds per lineal foot of width. For approximating deflections, a value of F of 75 will be used. Thus special diagonally sheathed diaphragms fit into the category of flexible diaphragms.

(3) *plywood sheathing.*

(a) Boundary members. All boundary members will be proportioned and spliced where necessary to transmit direct stresses. The nominal width of the framing members will be at least 2 inches. In general, panel edges will bear on the framing members and butt along their centerlines. Nails will be placed not less than 3/8 inch in from the panel edge, not more than 12 inches apart along intermediate supports, and 6 inches along panel edge bearings and will be firmly driven into the framing members. No unblocked panels less than 12 inches wide will be used.

(b) Stiffness. The stiffnees of plywood diaphragm webs varies with the thickness of the plywood, the nailing, and the joint blocking. These variables also occur in the determination of the working shear values of the diaphragm. An F value for determining the stiffness category and for estimating deflections will be determined using the following formula:

$$F = \frac{33{,}000\ q_{ave}}{q^2_D} \qquad \text{(eq 5-33)}$$

where

q_D = allowable shear specified in table 5-6 in pounds per foot

(c) Flexibility. For plywood diaphragms the tabular values of q_D range from 110 pounds per foot to 820 pounds per foot. From this, the value of F can be determined to range between 300 and 20. Thus, plywood diaphragms can be very flexible, flexible, or semiflexible diaphragms depending on the selection of the type of diaphragm to be used.

(d) Nailing. The use of pneumatically or mechanically driven steel wire staples with a minimum crown width of 7/16 inch is an acceptable alternative method of attaching diaphragms. The crown of the staple must be installed parallel to the framing member.

SAMPLE CALCS NO. 6 FOR TYPE A DIAPHRAGM WITH CONC. FILL

$q_D = q_1 + q_6$

$q_1 = \frac{92S(t_1 + t_2')K}{bL_v}$ $\quad K = 1{,}000$

$q_6 = q_6' + q_6''$

$q_6' = \frac{t_f W^{1.5}\sqrt{f_c'}}{200}$

$q_6'' = 2\sqrt{\frac{Kb}{d(t_1 + t_2')}}$

$q_1 = \frac{92 \times 1.92(.06 + .032)1{,}000}{2 \times 6} = 1354.2$

$q_6' = \frac{2.5 \times 145^{1.5}\sqrt{3{,}000}}{200} = 1195$

$q_6'' = 2\sqrt{\frac{1000 \times 2}{1.92(.06 + .032)}} = 212.8$

$q_D = 1354.2 + 1195 + 212.8 = 2762$

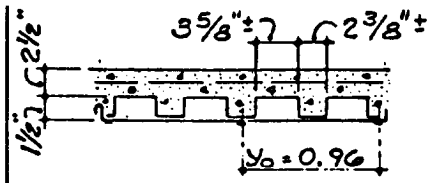

16-18 GAGE MULTIPLE PLATE DECK WITH 2 1/2" CONC. FILL. 3 END WELDS

$t_f = 2.5"$

$t_1 = .060 \quad t_2' = 2/3 \times .048 = .032"$

$S = \frac{\Sigma Y^2}{Y_o} = \frac{2 \times .96^2}{.96} = 1.92$

$I_x = .603$

$b = 2' \quad h = 1.5"$

$L_v = 6'\text{-}0" \quad d = 1.92 = 2Y_o$

$n = \frac{4}{2} = 2$

$W = 145$ PCF $\quad f_c' = 3{,}000$ PSI

($q_D = 2760$ IN FIGURE 5-22 FOR $L_v = 6'$ AND GAGE = 16-18)

$F = \frac{20q_6''}{b^2 q_D} = \frac{20 \times 212.8}{2^2 \times 2760} = .385$ (SEE FIGURE 5-22, 2 of 3)

SAY 38

Figure 5-22. Continued.

Common Wire Nail	staple	Minimum Staple Penetration in Framing Member
6d	14 gauge	1 inch
8d	13 gauge	1 inch
10d	12 gauge	1 1/8 inch

e. Typical details. Refer to figure 5–23.

5-11. Horizontal bracing.

a. Diaphragms. Diaphragms may be made of horizontal steel bracing. Usually the bracing consists of members added at **the** top or bottom plane of a system of floor or roof trusses or beams. Transverse elements are added for components perpendicular to the trusses or beams, and diagonal members are added to form a triangulated plane of bracing. As with other kinds of diaphragms, the design force will be obtained from SEAOC 1H2j. The bracing members and connections will be treated like vertical braced frames under SEAOC 4G.

b. Secondary bracing. Components of the horizontal bracing system should be coordinated with bridging and other bracing members that are provided for lateral bracing of trusses and girders, for steadying columns, and for transferring lateral forces to other systems at a lower level.

Recommended Shear (pounds per foot) for Horizontal APA Panel Diaphragms with Framing of Douglas-Fir, Larch or Southern Pine[a] for Wind or Seismic Loading

Panel Grade	Common Nail Size	Minimum Nail Penetration in Framing (inches)	Minimum Nominal Panel Thickness (inch)	Minimum Nominal Width of Framing Member (inches)	Blocked Diaphragms: Nail Spacing (in.) at diaphragm boundaries (all cases), at continuous panel edges parallel to load (Cases 3 & 4), and at all panel edges (Cases 5 & 6)[b]				Unblocked Diaphragms: Nails Spaced 6" max. at Supported Edges[b]	
					6	4	2½[c]	2[c]	Case 1 (No unblocked edges or continuous joints parallel to load)	All other configurations (Cases 2, 3, 4, 5 & 6)
					Nail Spacing (in.) at other panel edges (Cases 1, 2, 3 & 4)					
					6	6	4	3		
APA STRUCTURAL I grades	6d	1-1/4	5/16	2 3	185 210	250 280	375 420	420 475	165 185	125 140
	8d	1-1/2	3/8	2 3	270 300	360 400	530 600	600 675	240 265	180 200
	10d[d]	1-5/8	15/32	2 3	320 360	425 480	640 720	730 820	285 320	215 240
APA RATED SHEATHING, APA RATED STURD-I-FLOOR and other APA grades except Species Group 5	6d	1-1/4	5/16	2 3	170 190	225 250	335 380	380 430	150 170	110 125
			3/8	2 3	185 210	250 280	375 420	420 475	165 185	125 140
	8d	1-1/2	3/8	2 3	240 270	320 360	480 540	545 610	215 240	160 180
			7/16	2 3	255 285	340 380	505 570	575 645	230 255	170 190
			15/32	2 3	270 300	360 400	530 600	600 675	240 265	180 200
	10d[d]	1-5/8	15/32	2 3	290 325	385 430	575 650	655 735	255 290	190 215
			19/32	2 3	320 360	425 480	640 720	730 820	285 320	215 240

(a) For framing of other spaces (1) Find species group of lumber in NFPA National Design Spec. (2) Find shear value from table above for nail size for Structural I panels regardless of actual grade). (3) Multiply value by 0.82 for Lumber Group III or 0.65 for Lumber Group IV.

(b) Space nails 12 in. oc along intermediate framing members (6 in. oc when supports are spaced 48 in. oc). (Applicable building codes may require 10 in cc nail spacing at intermediate supports for floors.)

(c) Framing at adjoining panel edges shall be 3-in. nominal or wider, and nails shall be staggered where nails are spaced 2 inches oc or 2-1/2 inches oc.

(d) Framing at adjoining panel edges shall be 3-in. nominal or wider, and nails shall be staggered where 10d nails having penetration into framing of more than 1-5/8 inches are spaced 3 inches cc

Notes: Design for diaphragm stresses depends on direction continuous panel joints with reference to load, not on direction of long dimension of sheet. Continuous framing may be in either direction for blocked diaphragms

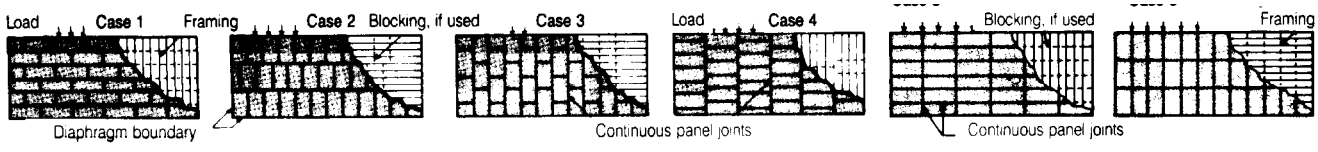

Note: Table 5-6 is reprinted, with permission, from Table 32 in APA DESIGN/ CONSTRUCTION Guide , © 1990 American Plywood Association.

Table 5-6. Horizontal diaphragm sheer.

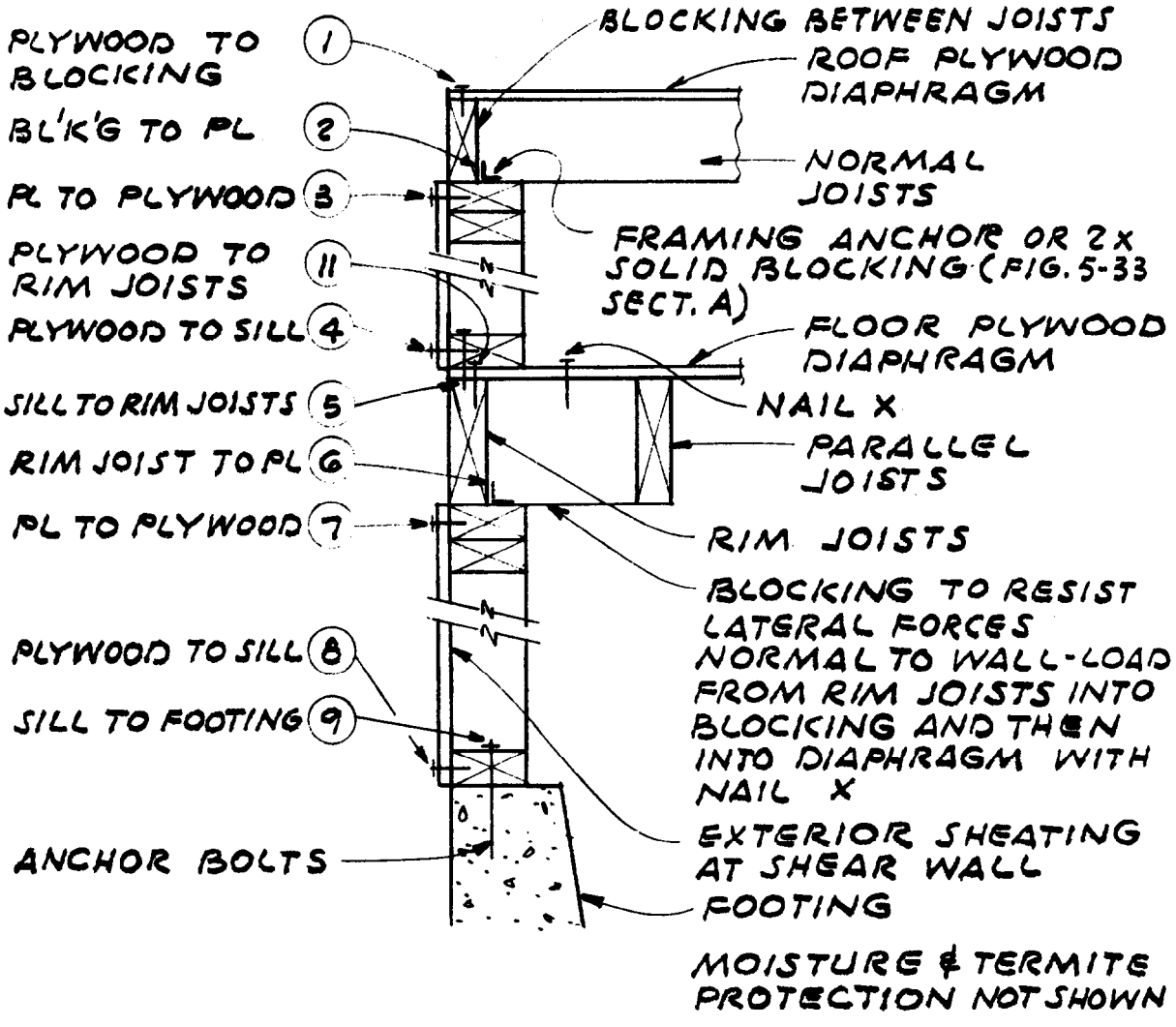

1 - 9 PATH OF FORCES FROM ROOF TO FOUNDATION

11, 6 - 9 PATH FOR FORCES FROM FLOOR DIAPHRAGM

DETAILS ABOVE ARE SCHEMATIC. THE PURPOSE IS TO SHOW THE PATH OF FORCES IN A PARTICULAR ARRANGEMENT OF FRAMING ELEMENTS.

Figure 5-23. Wood details.

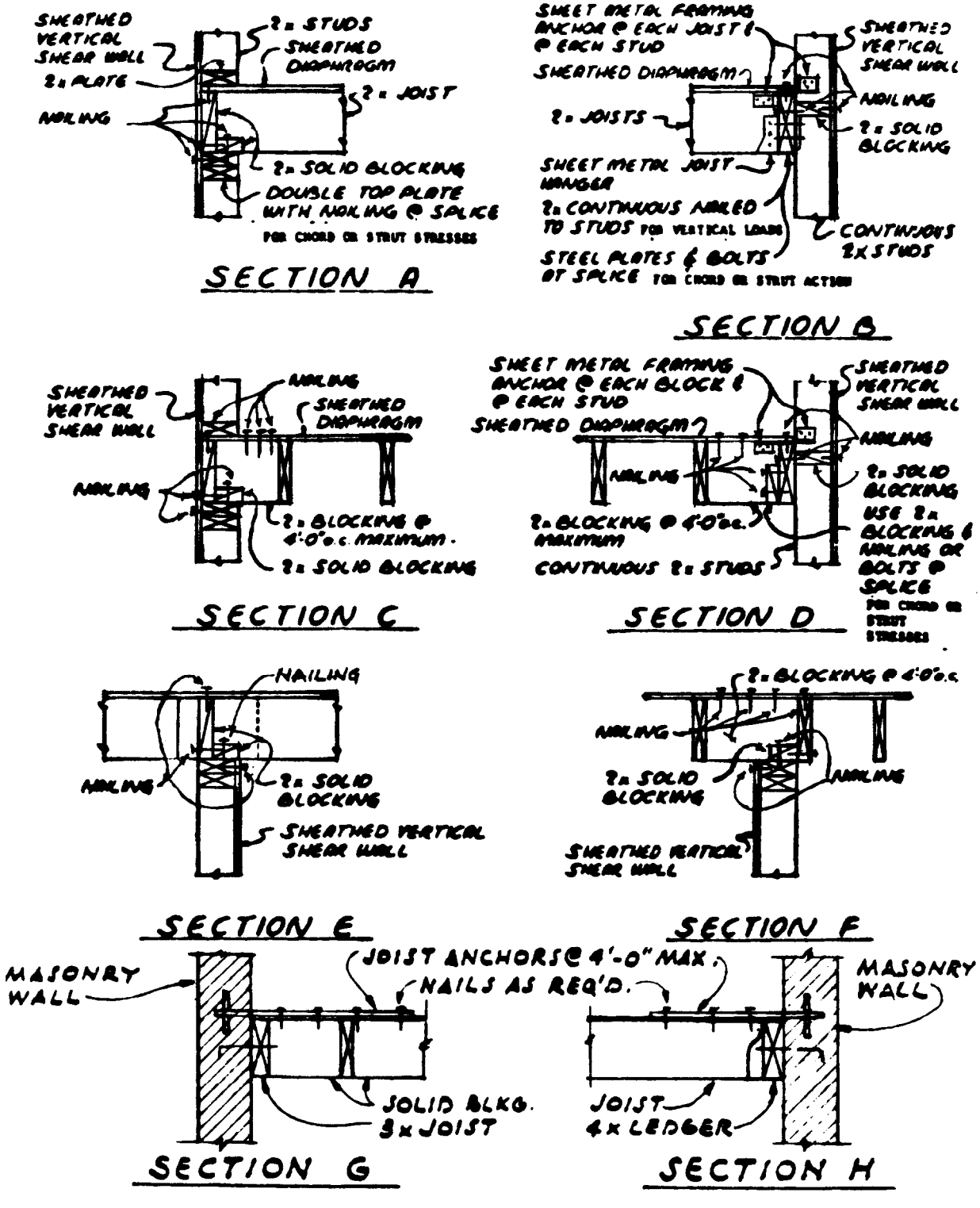

Figure 5-23. Continued.

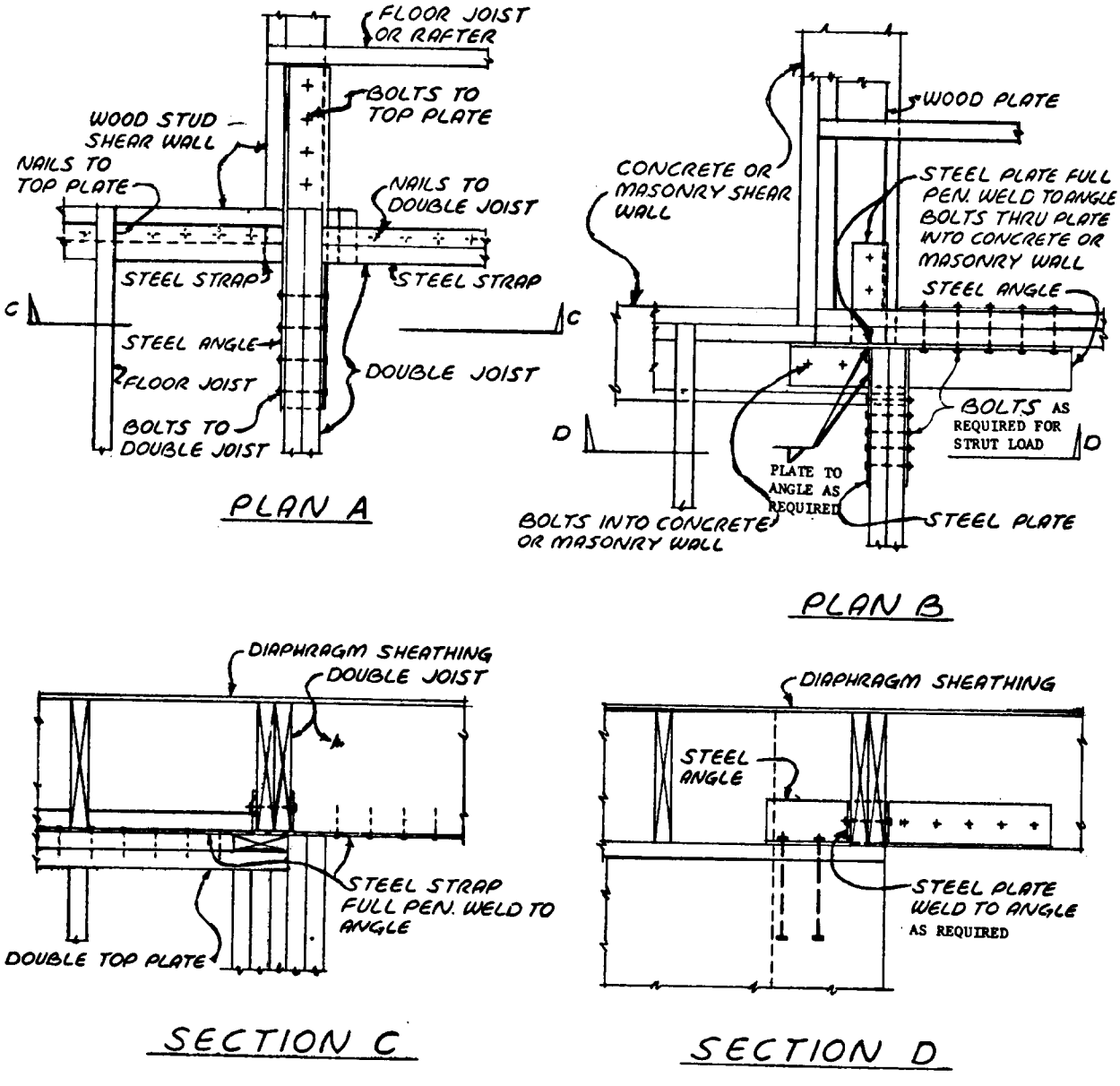

NOTE:
BOLTS AND NAILING TO BE DESIGNED FOR DIAPHRAGM STRUT OR CHORD LOADS. ROOF CONNECTIONS WILL BE SIMILAR BUT MODIFIED BECAUSE OF ROOF SLOPE.

Figure 5–23. Continued.

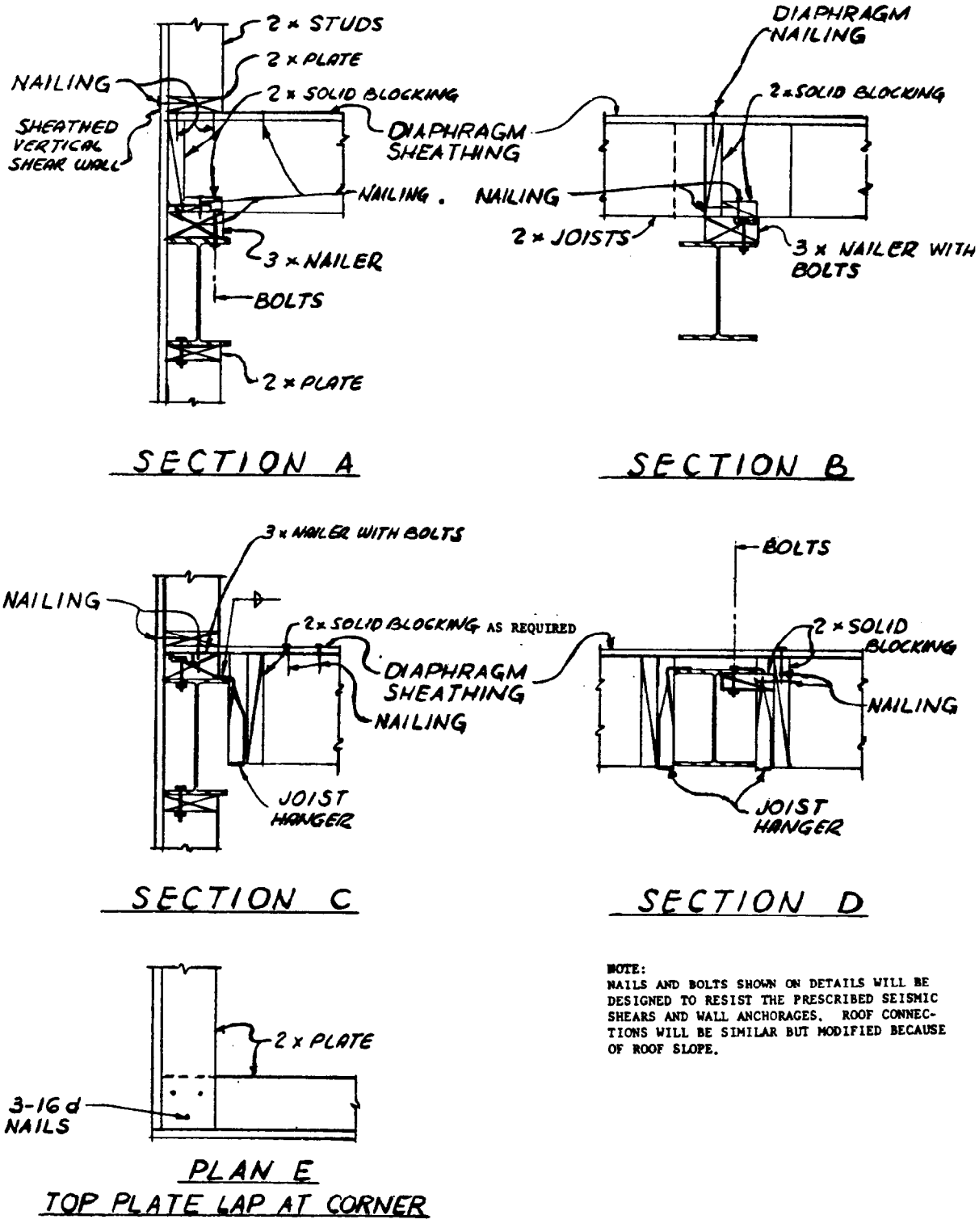

NOTE:
NAILS AND BOLTS SHOWN ON DETAILS WILL BE DESIGNED TO RESIST THE PRESCRIBED SEISMIC SHEARS AND WALL ANCHORAGES. ROOF CONNECTIONS WILL BE SIMILAR BUT MODIFIED BECAUSE OF ROOF SLOPE.

Figure 5–23. Continued.

CHAPTER 6

SHEAR WALLS

6-1. Introduction. This chapter prescribes the criteria for the design of walls of buildings in seismic areas; indicates the principles and factors governing the application of horizontal forces normal to the plane of walls and parallel to the plane of walls gives certain design data; and illustrates typical details of construction. A wall that carries a vertical load other than its own weight, and/or that resists a horizontal force parallel **to** the wall, other than seismic shears resulting from its own weight, is classified as a structural wall. Other walls and partitions are classified as nonstructural and are treated in chapter 11.

6-2. General.

a Function. Shear walls are vertical elements in the lateral force resisting system. They transmit lateral forces from the diaphragm above to the diaphragm below or the foundation.

b. Shear wall types. Two basic shear wall systems are defined in SEAOC Table l-G; light, framed walls with shear panels of plywood and certain other materials, and shear walls of reinforced concrete and reinforced masonry.

c. *Design criteria* General discussions of shear walls are presented in paragraphs 6-3 through 6-6. The details of concrete shear walls are covered in paragraph 6-7, precast concrete shear walls in 6–8, masonry shear walls in 6–9, wood stud shear walls in 6-10, and steel stud shear walls in 6-11.

6-3. Design forces. Walls may be subjected to both vertical (gravity) and horizontal (wind or earthquake) forces. The horizontal forces are both in plane and out of plane. When considered under their in-plane loads, walls are called shear walls; when considered under their out-of-plane loads they are called normal walls. Walls will be designed to withstand all vertical loads and horizontal forces, both parallel to and normal to the flat surface, with due allowance for the effect of any eccentric loading or overturning forces generated. Any wall, whether or not intended as part of the lateral force resisting system, is subjected to lateral forces unless it is isolated on three sides (both ends and top), in which case it is classified as nonstructural. Any wall that is not isolated will participate in shear resistance to horizontal forces parallel to the wall, since it tends to deform under stress when the surrounding framework deforms.

6-4. Wall components. Reinforced concrete and reinforced masonry shear walls are seldom simple walls. Whenever a wall has doors, windows, or other openings, the wall must be considered as an assemblage of relatively flexible components (column segments and wall piers) and relatively stiff elements (wall segments).

a. Column segments. A column segment is a vertical member whose height exceeds three times its thickness and whose width is less than two and one-half times its thickness. Its load is usually predominantly axial. Although it may contribute little to the lateral force resistance of the shear wall, its rigidity must be considered. When a column is built integral with a wall, the portion of the column that projects from the face of the wall is called a pilaster. Column segments shall be designed according to ACI 318 for concrete and TM 5–809–3/AFM 88–3, Chap 3 for masonry.

b. Wall piers. A wall pier *is* a segment of a wall whose horizontal length is between two and one-half and six times its thickness and whose clear height is at least two times its horizontal length.

c. *Wall segments.* Wall segments are components that are longer than wall piers. They are the primary resisting components in the shear wall.

6-5. In-plane effects. Horizontal forces at any floor or roof level are generally transferred to the ground (foundation) by using the strength and rigidity of shear walls (and partitions). A shear wall may be considered analogous to a cantilever plate girder standing on end in a vertical plane where the wall performs the function of a plate girder web, the pilasters or floor diaphragms function as web stiffeners, and the integral reinforcement of the vertical boundaries functions as flanges. Axial, flexural, and shear forces must be considered in the design of shear walls. The tensile forces on shear wall elements resulting from the combination of seismic uplift forces and seismic overturning moments must be resisted by anchorage into the foundation medium unless the uplift can be counteracted by gravity loads (e.g., 0.85 of dead load) mobilized from neighboring elements. A shear wall may be constructed of materials such as concrete, wood, unit masonry, or metal in various forms. Design procedures for such materials as cast-in-place reinforced concrete and reinforced unit masonry are well known and present no problem to the designer once the loading and reaction system is determined. Other materials

frequently used to support vertical loads from floors and roofs have well-established vertical load carrying characteristics but have required tests to demonstrate their ability to resist lateral forces. Various types of wood sheathing and metal siding fall into this category. Where a shear wall is made up of units such as plywood, gypsum wallboard, tilt-up concrete units, or metal panel units, its characteristics are, to a large degree, dependent upon the attachments of one unit to another and to the supporting members.

a. *Rigidity analysis.* For a building with rigid diaphragms, there is a torsional moment, and a rigidity analysis is required. Refer to chapter 5. It is necessary to make a logical and consistent distribution of story shears to each wall. An exact determination of wall rigidities is very difficult but is not necessary because only *relative* rigidities are needed. Approximate methods in which the deflections of portions of walls are combined usually are adequate.

(1) *Wall deflections.* The rigidity of a wall is usually defined as the force required to cause a unit deflection. Rigidity is expressed in kips per inch. The deflection of a concrete shear wall is the sum of the shear and flexural deflections. See figure 6-1. In the case of a solid wall with no openings, the computations of deflection are quite simple. However, where the shear wall has openings, as for doors and windows, the computations for deflection and rigidity are much more complex. An exact analysis, considering angular rotation of elements, rib shortening, etc., is very time-consuming. For this reason, several short-cut approximate methods involving more-or-less valid assumptions have been developed. These do not always give consistent or satisfactory results. A conservative approach and judgment must be used.

(2) *Deflection charts. The* calculation of deflections is facilitated by the use of the deflection charts. See figure 6-4 for fixed-ended corner and rectangular piers. Curves 5 and 6 are for cantilever corner and rectangular piers. The corner pier curves are for the special case where the moment of inertia, I, of the corner pier is 1.5 times that of a rectangular pier. For other I-values the bending portion of the deflection would be proportional. The deflections shown on the charts are for a horizontal load, P, of 1,000,000 pounds. The deflections shown on the charts are reasonably accurate. The formulas written on the curves can be used to check the results. However, the charts will give no better results than the assumptions made in the shear wall analysis. For instance, the point of contraflexure of a vertical pier may not be in the center of the pier height. In some cases the point of contraflexure may be selected by judgment and an interpolation made between the cantilever and fixed conditions.

(3) *Foundation effects.* The rotation at the foundation can greatly influence the overall rigidity of a shear wall because of the very rigid nature of the shear wall itself; however, the rotational influence on relative rigidities of walls for purposes of horizontal force distribution may not be as significant. Considering the complexities of soil behavior, a quantitative evaluation of the foundation rotation is generally not practical, but a qualitative evaluation, recognizing the limitations and using good judgment, will be provided.

(4) *Framework effects.* The relative rigidity of concrete or unit masonry walls with openings is

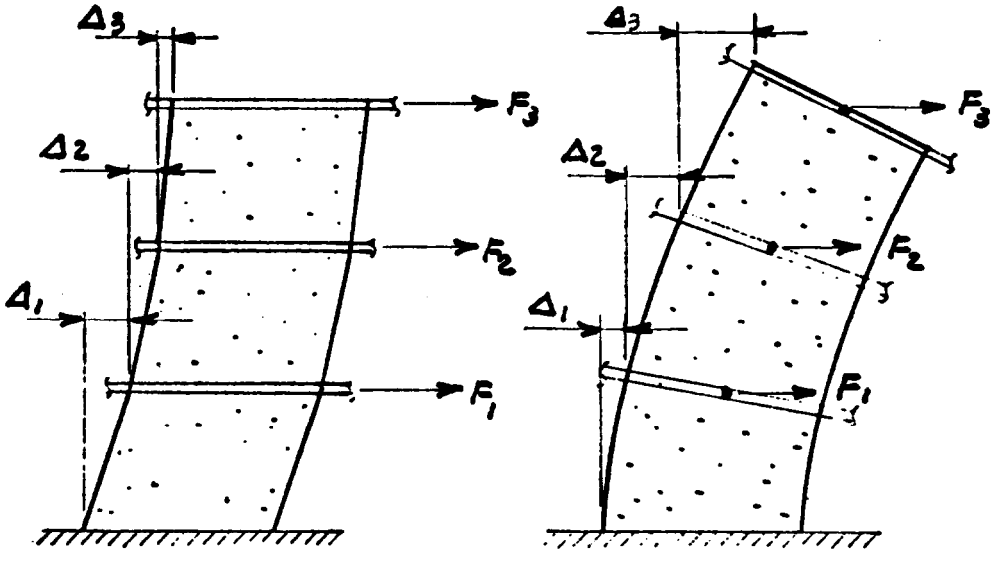

(a) Shear Deformation **(b) Flexural Deformation**

Figure 6-1. Shear wall deformation.

usually much greater than that of the building framework. Thus, the walls tend to resist essentially all or a major part of the lateral force.

b. Effect of openings. The effect of openings on the ability of shear walls to resist lateral forces must be considered. If openings are very small, their effect on the overall state of stress in a shear wall is minor. Large openings have a more pronounced effect and, if large enough, result in a system in which typical frame action predominates. Openings commonly occur in regularly spaced vertical rows throughout the height of the wall, and the connection between the wall sections is provided by either connecting beams (or spandrels), which form a part of the wall, or floor slabs, or a combination of both. If the openings do not line up vertically and/or horizontally, the complexity of the analysis is greatly increased. In most cases, a rigorous analysis of a wall with openings is not required. In the design of a wall with openings, the deformations must be visualized in order to establish some approximate method for analyzing the stress distribution to the wall. Figures 6-1 and 6-2 give some visual descriptions of such deformations. The major points that must be considered are the lengthening and shortening of the extreme sides (boundaries) due to deep beam action, the stress concentration at the corner junctions of the horizontal and vertical components between openings, and the shear and diagonal tension in both the horizontal and vertical components.

(1) *Relative rigidities of piers and spandrels.* The ease of methods of analysis for walls with openings is greatly dependent on the relative rigidities of the piers and the spandrels, as well as the general geometry of the building. Figure 6-3 shows two extreme examples of relative rigidities of exterior walls of a building. In figure 6–3 the piers are very rigid and the spandrels are very flexible. Assuming a rigid base, the shear walls act as vertical cantilevers. When a lateral force is applied, the spandrels act as struts that flexurally deform to be compatible with the deformation of the cantilever piers. It is relatively simple to determine the forces on the cantilever piers by ignoring the deformation characteristics of the spandrels. The spandrels are then designed to be compatible with the pier deformations. In figure 6–3, the piers are relatively flexible compared with the spandrels. The spandrels are assumed to be infinitely rigid, and the piers are analyzed as fixed-ended columns. The spandrels are then designed for the forces induced by the columns. The overall wall system is also analyzed for overturning forces that induce axial forces into the columns. The calculations of relative rigidities for both cases shown in figure 6-3 can be aided by the charts in figure 6-4. For cases of relative spandrel and pier rigidities other than those shown, the analysis and design become more complex.

(2) *Methods of analysis.* Approximate methods for analyzing walls with openings are generally

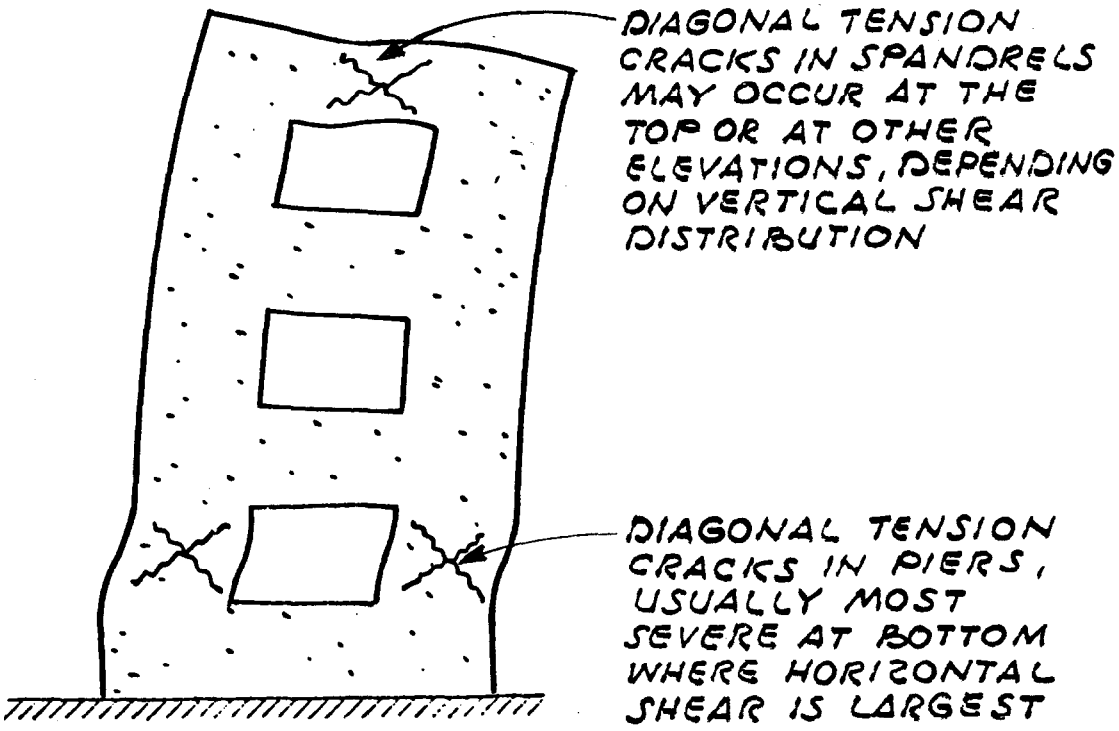

Figure 6–2. Deformation of shear wall with openings.

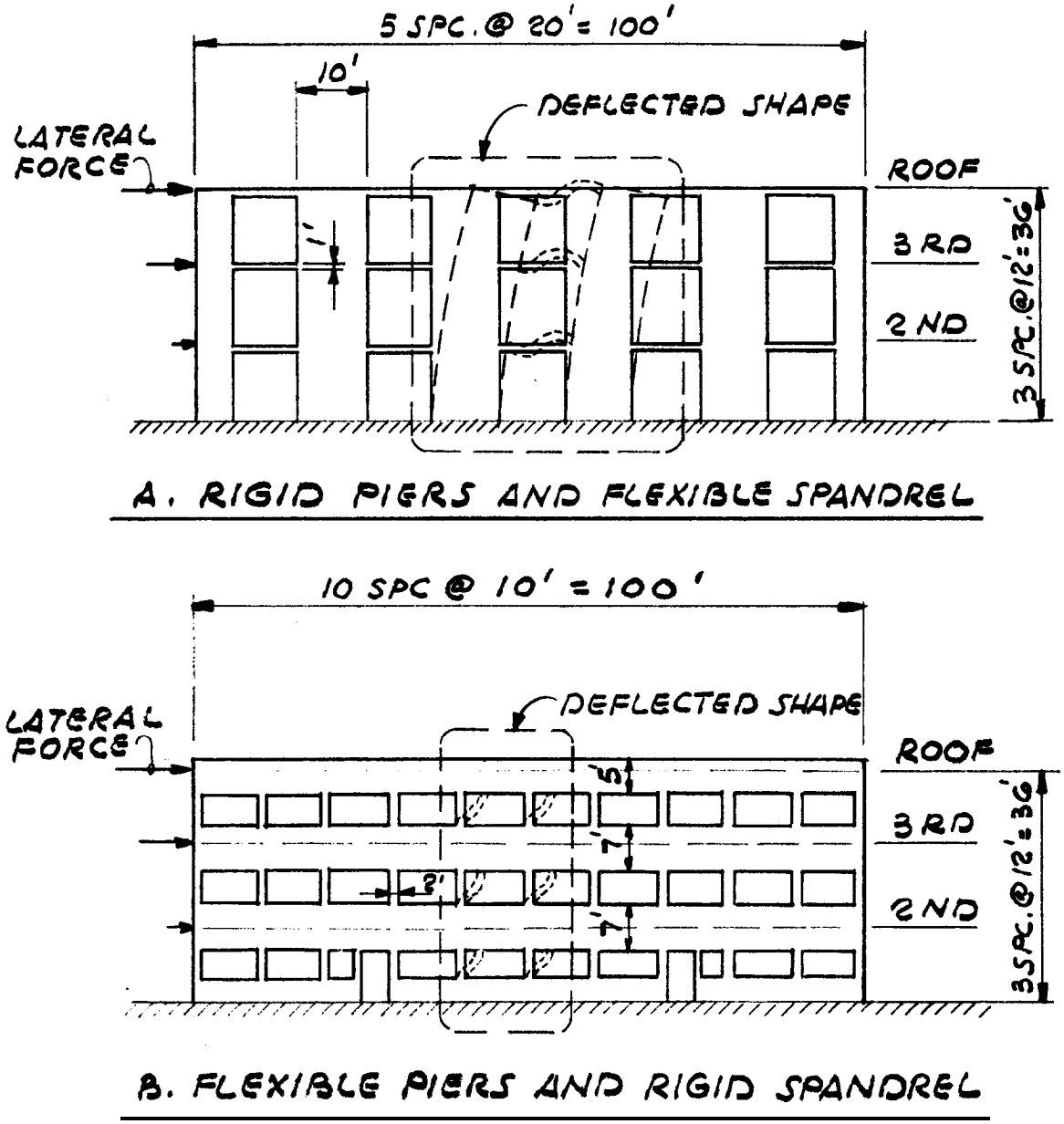

Figure 6-3. Relative rigidities of piers and spandrels.

acceptable. For the extreme cases shown in figure 6–3, the procedure is straightforward. For other cases, a variety of assumptions may be used to determine the most critical loads on various elements, thus resulting in a conservative design. (Note: In some cases a few additional reinforcing bars, at little additional cost, can greatly increase the strength of shear walls with openings.) However, when the reinforcement requirements or the resulting stresses of this approach appear excessively large, a rigorous analysis may be justified.

c. *Coupled shear walls.* When two or more shear walls in one plane are linked together by coupling beams, interactive forces are transmitted to the shear walls by the beams. In addition to these axial forces, the beams develop moments and shears that contribute to the resistance of the walls to overturning. The magnitude of the resisting beam bending moments and vertical shears is dependent on the relative stiffnesses of the walls and the coupling beams. It should be noted that the foundation itself functions as a coupling beam. Accurate determination of the resisting forces can be complex; therefore, approximate methods are generally used. One method may be used for calculating the axial forces and another method may be used for calculating bending moments and shears to ensure that the structural elements are not underdesigned.

d. *Construction joints and dowels.* The contact faces of shear wall construction joints have exhibited slippage and related drift damage in past

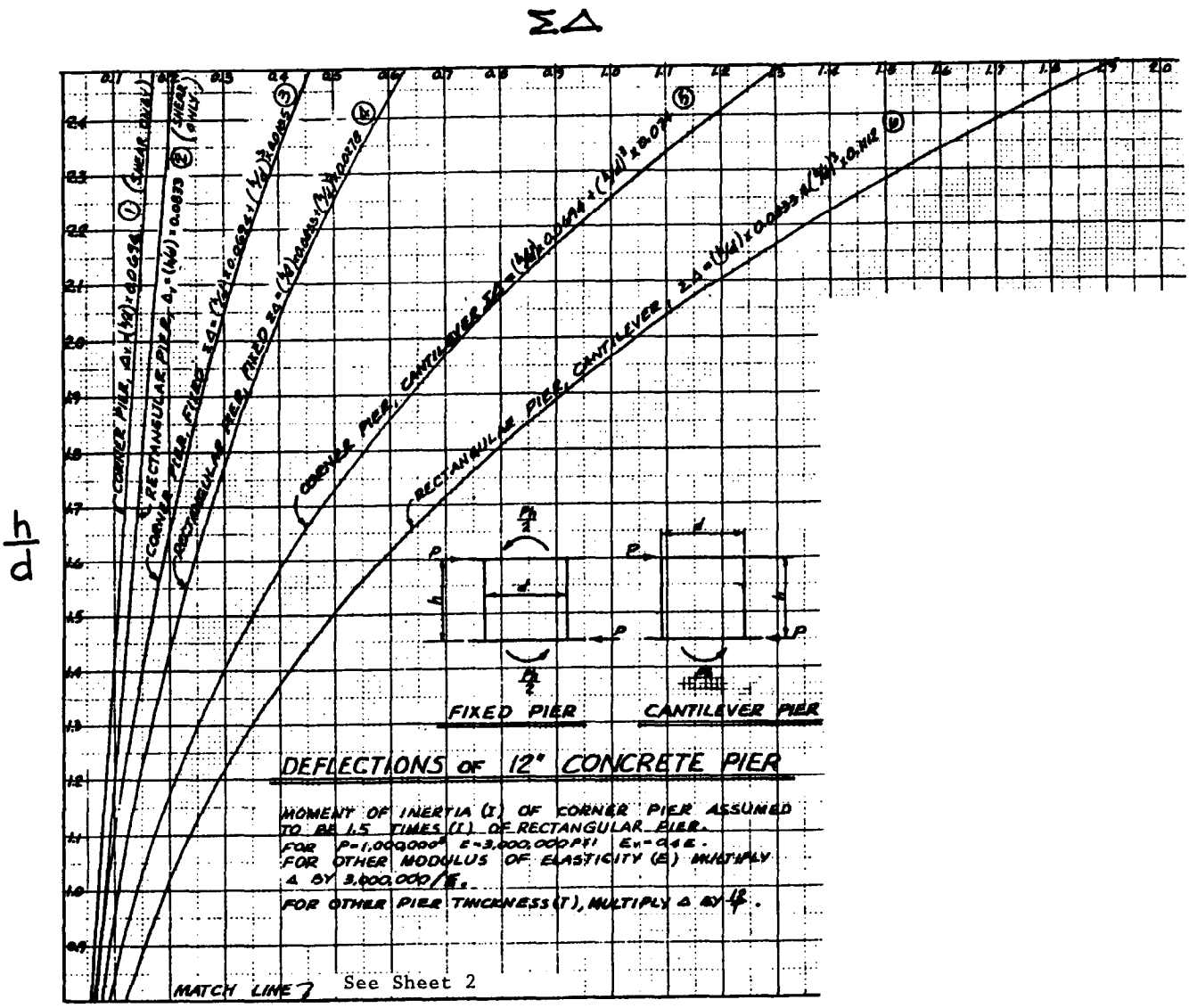

Figure 6-4. Design curves for masonry and concrete shear walls.

earthquakes. Consideration must be given to the location and details of construction joints. They must be clean and roughened. Shear friction reinforcement may be utilized in accordance with ACI 11.7. For this procedure a coefficient of friction of 0.6 is suggested for seismic effects.

6-6. Out-of-plane effects.

a. Lateral forces. Walls and partitions must safely resist horizontal seismic forces normal to their flat surface (fig 6-5, part a). At the same time they must resist moments and shears induced by relative deflections of the diaphragms above and below (fig 6–5, part b). The normal force on a wall is a function of its weight. The equation given in SEAOC 1G is $F_p = ZIC_pW_p$ with $C_p = 0.75$; however, wind forces, other forces, or interstory drift will frequently govern the design. (For cantilevered walls, see paragraph c below.) The design force will be applied to the wall in both inward and outward directions.

b. Wall behavior. Walls usually distribute normal forces vertically to the horizontal resisting elements above or below. They may also distribute normal forces to frames or other walls or frames. A wall may be either continuous or discontinuous across its supports.

c. *Cantilevered walls. Where* walls, such as parapets, are cantilevered, the anchorage for reaction and cantilever moment is required to be fully developed (fig 6-5, part c). C_p for this condition is

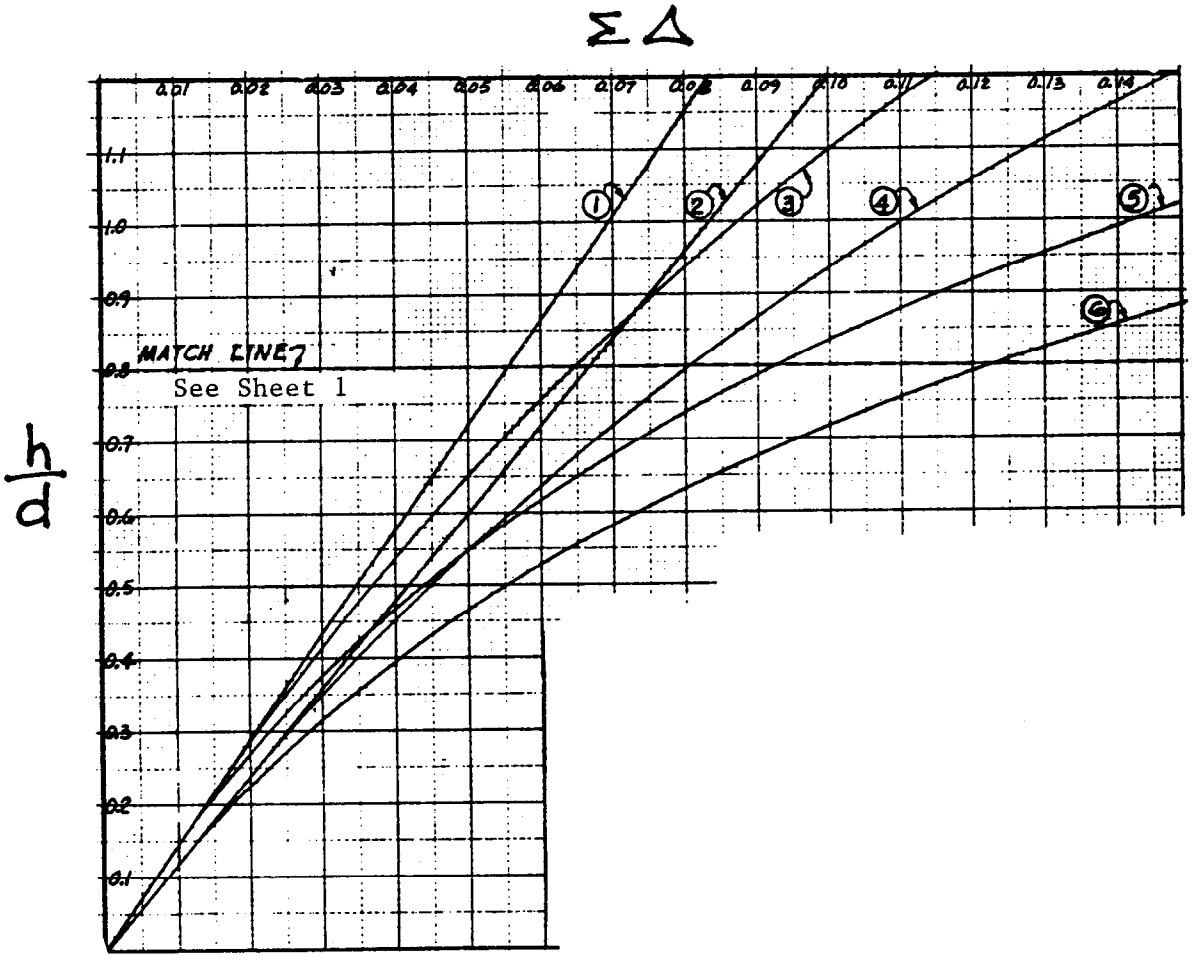

Figure 6-4. Continued

2.00, per SEAOC Table l–H. Where a parapet wall is anchored to a conrete roof slab and is not a continuation of a wall below, the roof slab will be designed for the cantilever moment. Where the parapet is a continuation of a wall below, the cantilever moment will be divided between the concrete slab and the wall below in proportion to their relative stiffnesses. Where the parapet is an extension of a wall below and is anchored to a roof or floor of wood, metal deck, or other similar materials the moment at the base of the parapet will be developed into the wall below. In this case the anchorage force to the roof will be determined by the usual methods of analysis, assuming a pinned condition for the connection of the roof to the wall.

d. Connections. Walls will be anchored to the structural frame or diaphragm by dowels, anchor bolts, or other approved methods to withstand the design forces, but in no case less than 200 pounds per lineal foot. Dovetail anchors are inadequate for this purpose. Nonstructural partitions will be isolated from exterior walls and shear partitions so as to prevent buttress action, which would restrict shear walls from deflecting with the diaphragms. Isolated partitions will be braced to overhead construction or anchored to other isolated cross walls to ensure lateral stability under out-of-plane loading.

6-7. Cast-in-place concrete shear walls.

a. General design criteria. The criteria used to design reinforced concrete shear walls will be ACI 318 as modified by the amendments given in appendix C. For tilt-up and other precast concrete shear walls, refer to paragraph 6–8. For details of reinforcement, see figures 6–6 and 6–7.

b. Boundary element requirements.

(1) ACI 21.5.3 prescribes when boundary elements are required at the boundaries and edges around openings of shear walls and also specifies that these elements be designed to carry the factored gravity and seismic overturning forces. The elements may be either special reinforced concrete columns (ACI 21.5.3.2) or structural steel columns (SEAOC 3E4).

(2) Boundary elements are required when the gross-section compressive stress due to factored

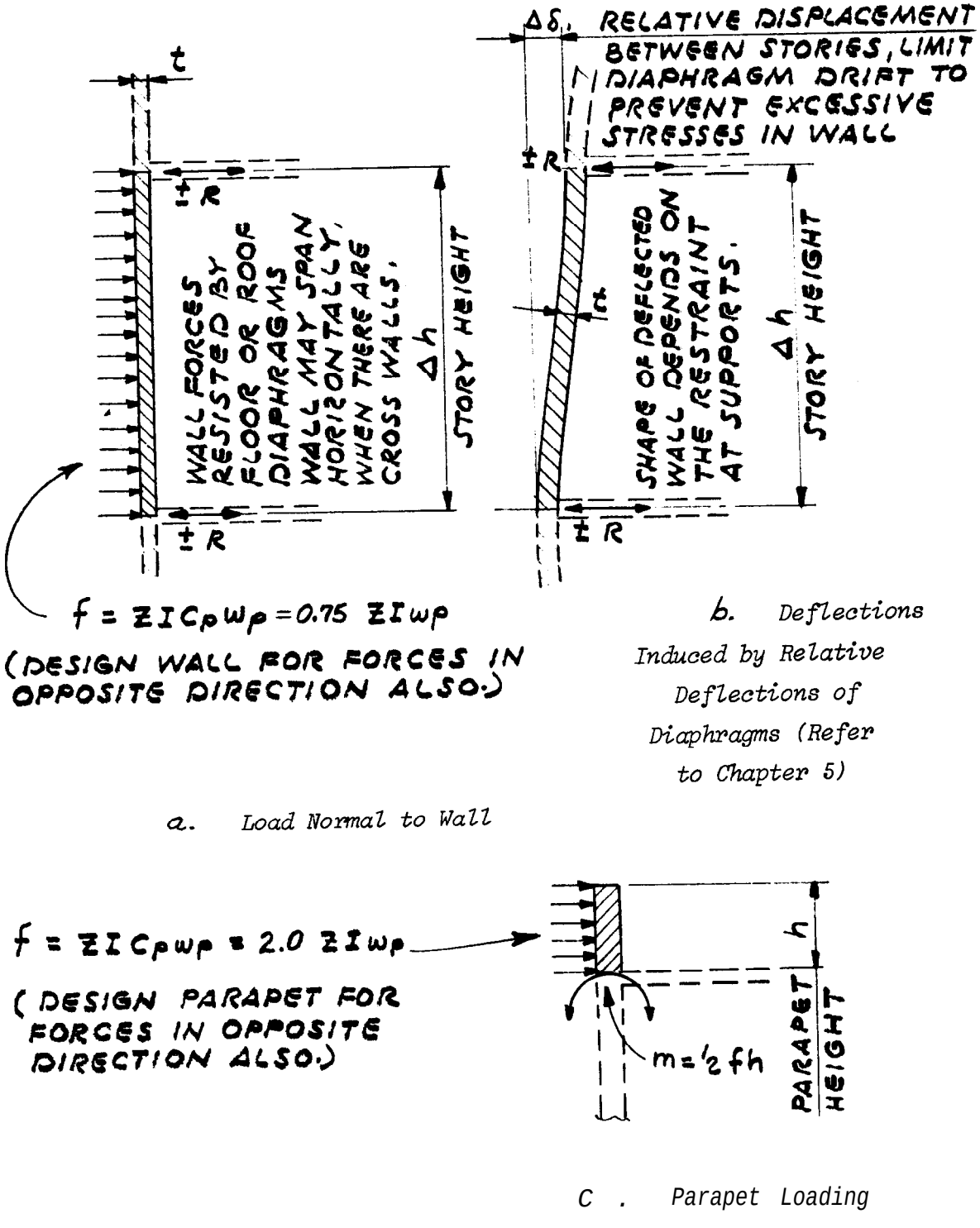

Figure 6-5. Out-of-plane effects.

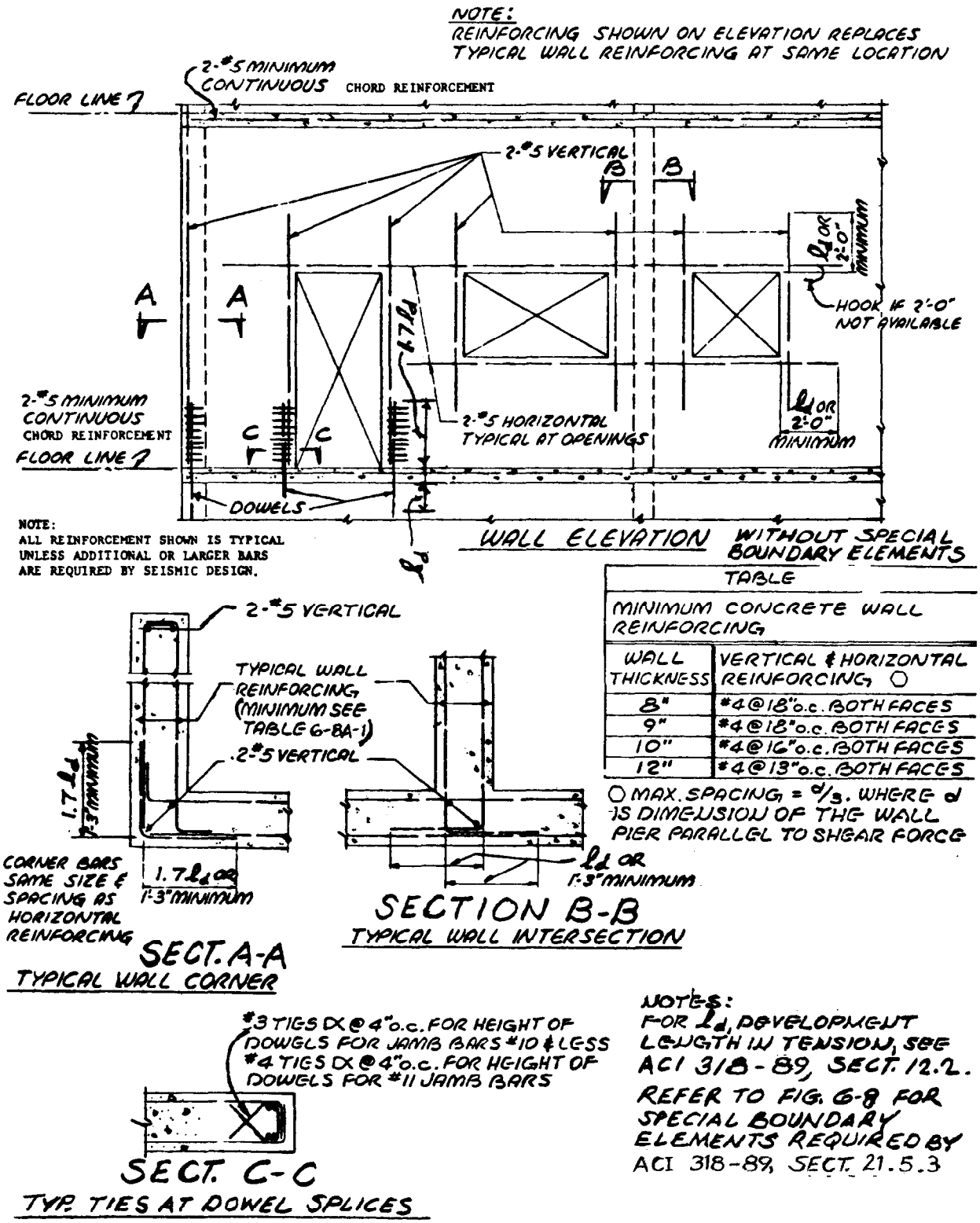

TABLE	
MINIMUM CONCRETE WALL REINFORCING	
WALL THICKNESS	VERTICAL & HORIZONTAL REINFORCING ○
8"	#4@18" o.c. BOTH FACES
9"	#4@18" o.c. BOTH FACES
10"	#4@16" o.c. BOTH FACES
12"	#4@13" o.c. BOTH FACES

○ MAX. SPACING = d/3. WHERE d IS DIMENSION OF THE WALL PIER PARALLEL TO SHEAR FORCE

Figure 6-6. Minimum concrete shear wall reinforcement (two curtains).

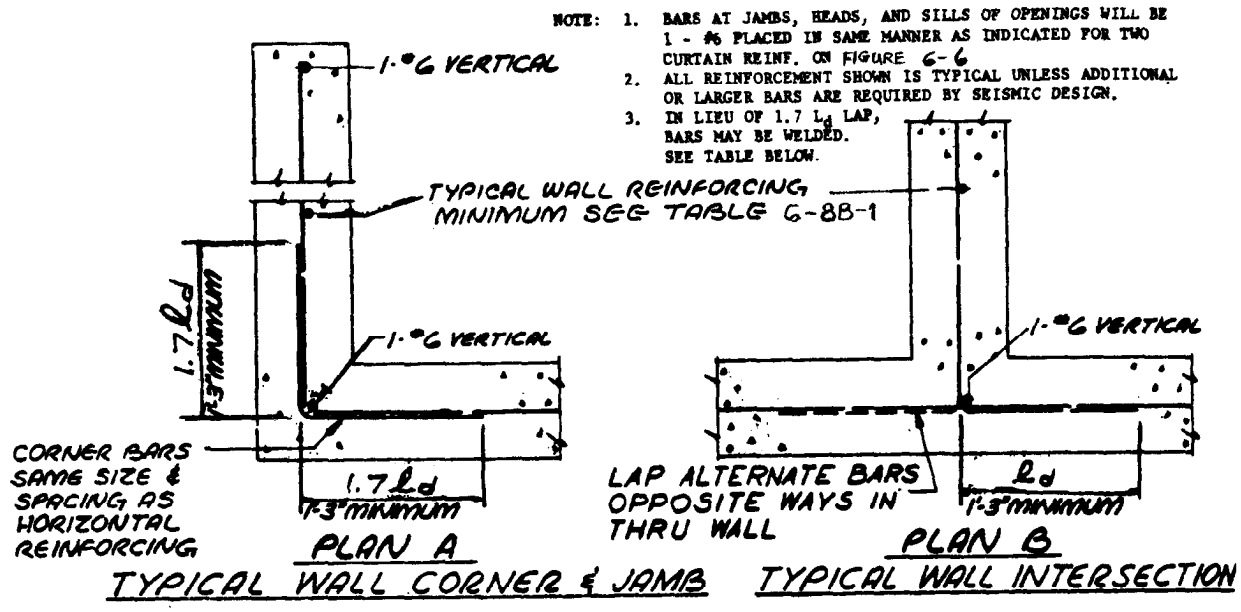

TABLE 6-8B-1

MINIMUM CONCRETE WALL REINF.	
WALL THICKNESS	VERTICAL & HORIZONTAL REINFORCING ○
5"	#4 @ 16" o.c IN CENTER
6"	#4 @ 13" o.c. IN CENTER
7"	#4 @ 11" o.c. IN CENTER
8"	#4 @ 10" o.c. IN CENTER

○ SPACING OF BARS NOT TO EXCEED d/3 WHERE d IS DIMENSION OF THE WALL PIER PARALLEL TO SHEAR FORCE

TABLE 6-8B-2

MINIMUM LENGTH OF STANDARD A.W.S. FLARE GROOVE WELDS TO DEVELOP LAPPED REINFORCING BARS	
BAR	WELD LENGTH (EACH SIDE)
3	2"
4	2½"
5	3"
6	3½"
7	4"

Figure 6-7. Minimum concrete shear wall reinforcement (one curtain).

forces exceeds 0.2 f'_c at the edge of the wall boundary or opening.

(3) Wall boundary elements may also occur in the building frame system and the dual system (systems B3a and D1a and b in SEAOC Table l-G), where the usual configuration is to place the shear walls within the bays between the frame columns. See figure 6-8 for details of shear walls with boundary elements.

(4) When boundary elements are not required (when gross-section compressive stress is less than or equal to 0.2 f'c), then only a minimum amount of boundary and edge steel is required by SEAOC 3E2 and 3E3. Details are shown in figures 6-6 and 6-7.

c. *Wall piers.* Refer to appendix C, paragraph C-19, for design.

6-8. Tilt-up and other precast concrete shear walls.

a *Analysis.* Where tilt-up or precast concrete walls are used as shear walls, the analysis is similar to that for walls of cast-in-place concrete; however, in this case the boundary conditions become critical, and the shears between precast and cast-in-place elements must be analyzed. Shears between two precast elements or between a precast element and a cast-in-place element may be developed by shear keys, dowels, or welded inserts. The contact joint itself is a cold joint and will be given no shear or tension value.

b. Joints. Precast concrete elements tend to be structurally separate, one element from another. In the case of precast wall construction, for instance, one might have a series of concrete ele-

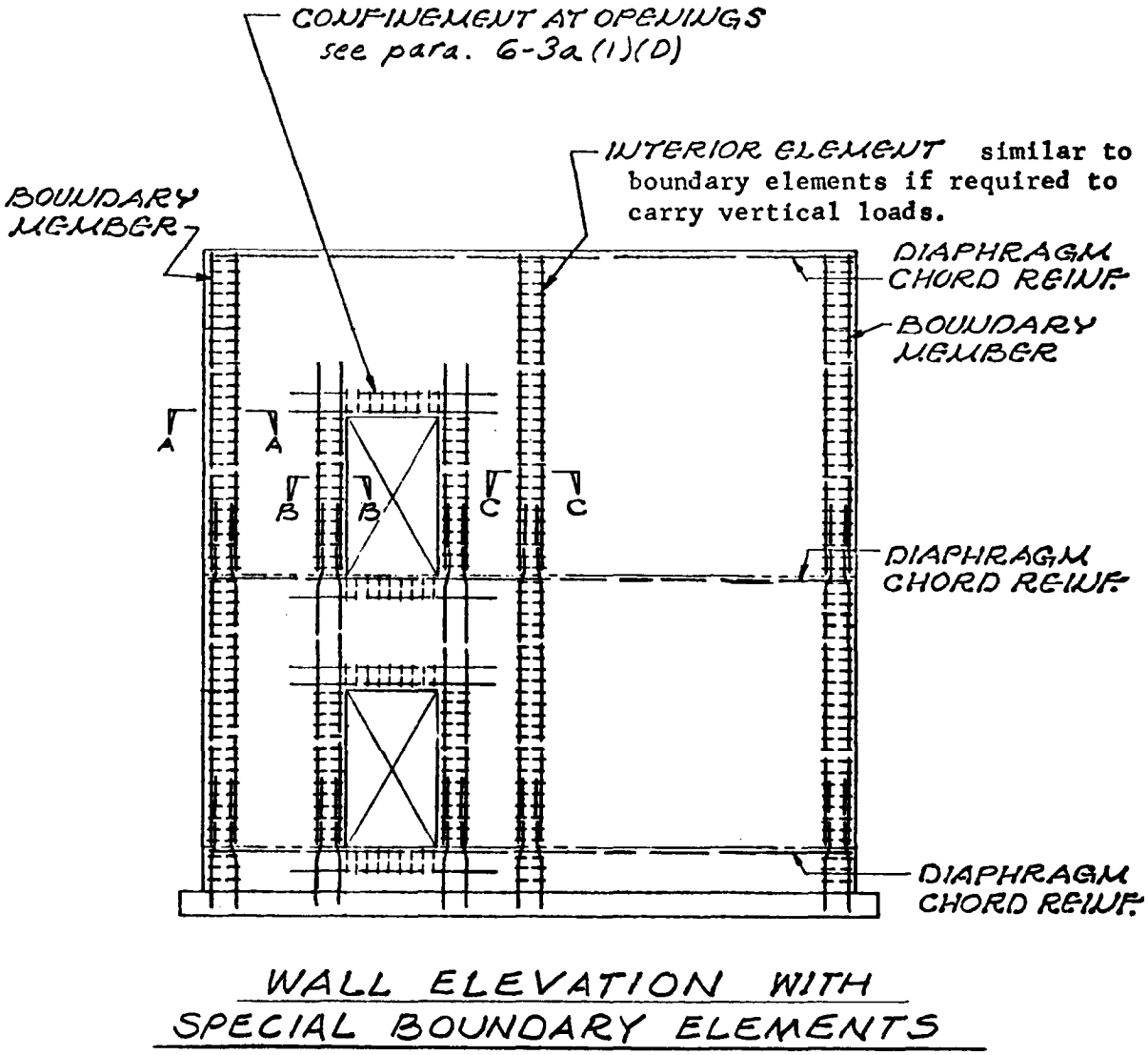

NOTES: For Sections A-A, B-B, and C-C, see Figure 6-8, 2 0F 2. Special vertical boundary members, as shown above, shall be provided at the edges of concrete shear walls in zones 3 and 4 when required by ACI 318-89, Sect. 21.5.3

Figure 6-8. Shear wall with special boundary members.

ments tied together at top and bottom but structurally separated from each other by vertical joints. Since all elements in a line are tied together at the top, they must have equal horizontal deflections; therefore, a horizontal force parallel to the line of units will be resisted by the individual elements in proportion to relative rigidities. Such elements may not have equal rigidities, since some may contain large openings or may be of different height-width ratios. Some elements may deflect primarily in shear and others primarily in flexure. Where significant dissimilar deflections are found, the building elements tying the individual units together must be analyzed to determine their ability to resist or accept such deformations, including angular rotation, without losing their ability to function as ties or diaphragm chords or footings. Mechanical keys or sleeved dowels may be used to assist in eliminating differential movement of adjacent precast panels separated by control joints where appearance and weathertightness are otherwise satisfactorily provided.

c. Connectors for shear walls. Past earthquakes have shown that the performance of weld plates or other nonductile connectors has often been poor, and in many cases they have resulted in failures.

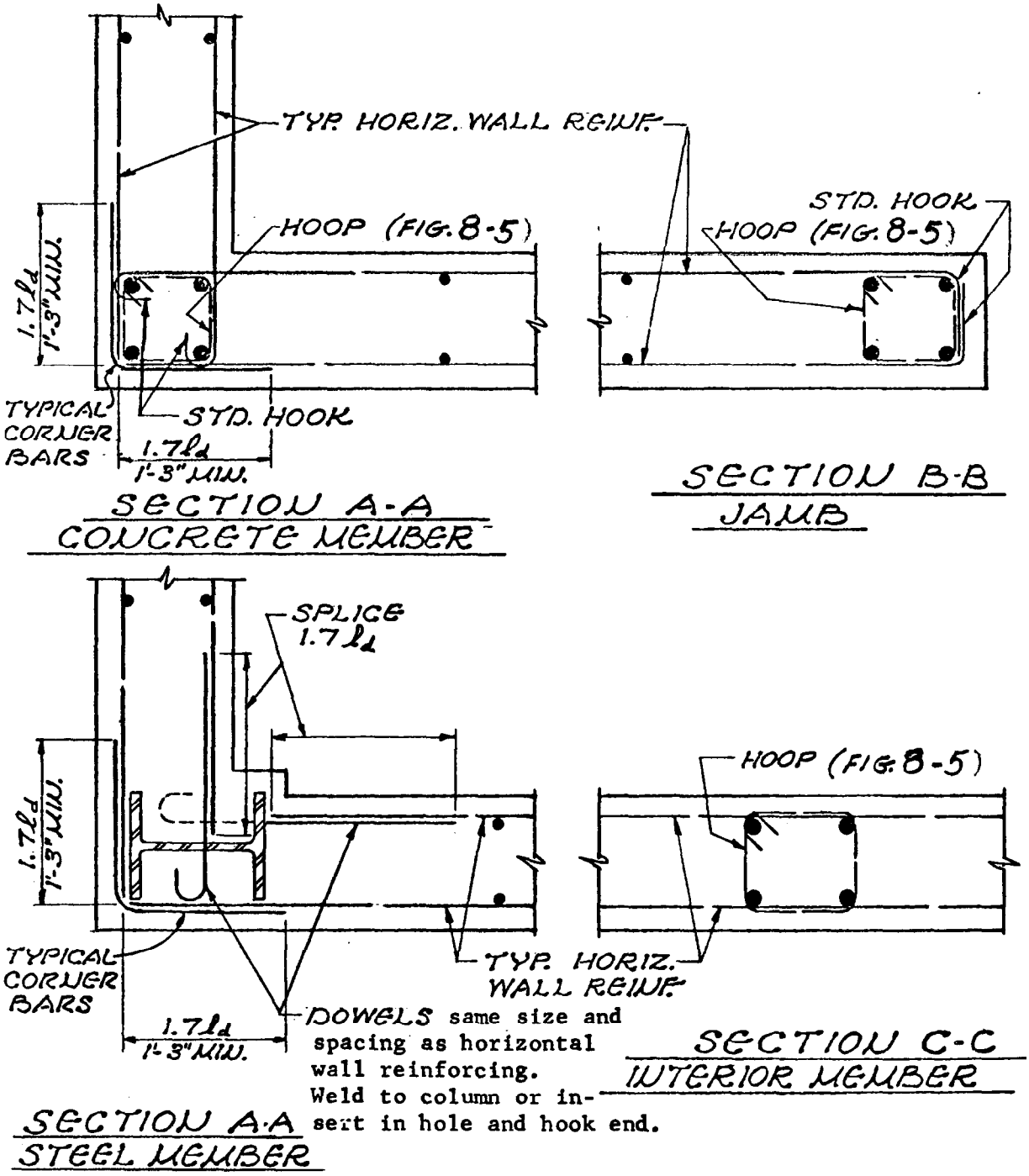

NOTES : For location of sections, see Figure 6-8, SHEET 1
For 1_d, development length in tension, SEE ACI 12.2

Figure 6-8. Continued.

These connectors have been weak links in the shear wall connection. It is important that the load bearing shear walls be more stringently or conservatively designed, since any connector failure during an earthquake may result in progressive failure to collapse. Therefore, all connectors for load-bearing and non-load-bearing walls will be designed for $3(R_w/8)$ times the actual seismic shear forces. The shear force will be uniformly distributed throughout the height or length of the shear wall with reasonably spaced connectors (maximum spacing 4 feet) rather than with a few that will have localized concentration of stresses. Detailed calculations will be made, including the localized effects in concrete walls attributed from these connectors. Sufficient details of connectors and embedded anchorage will be provided to preclude construction deficiency.

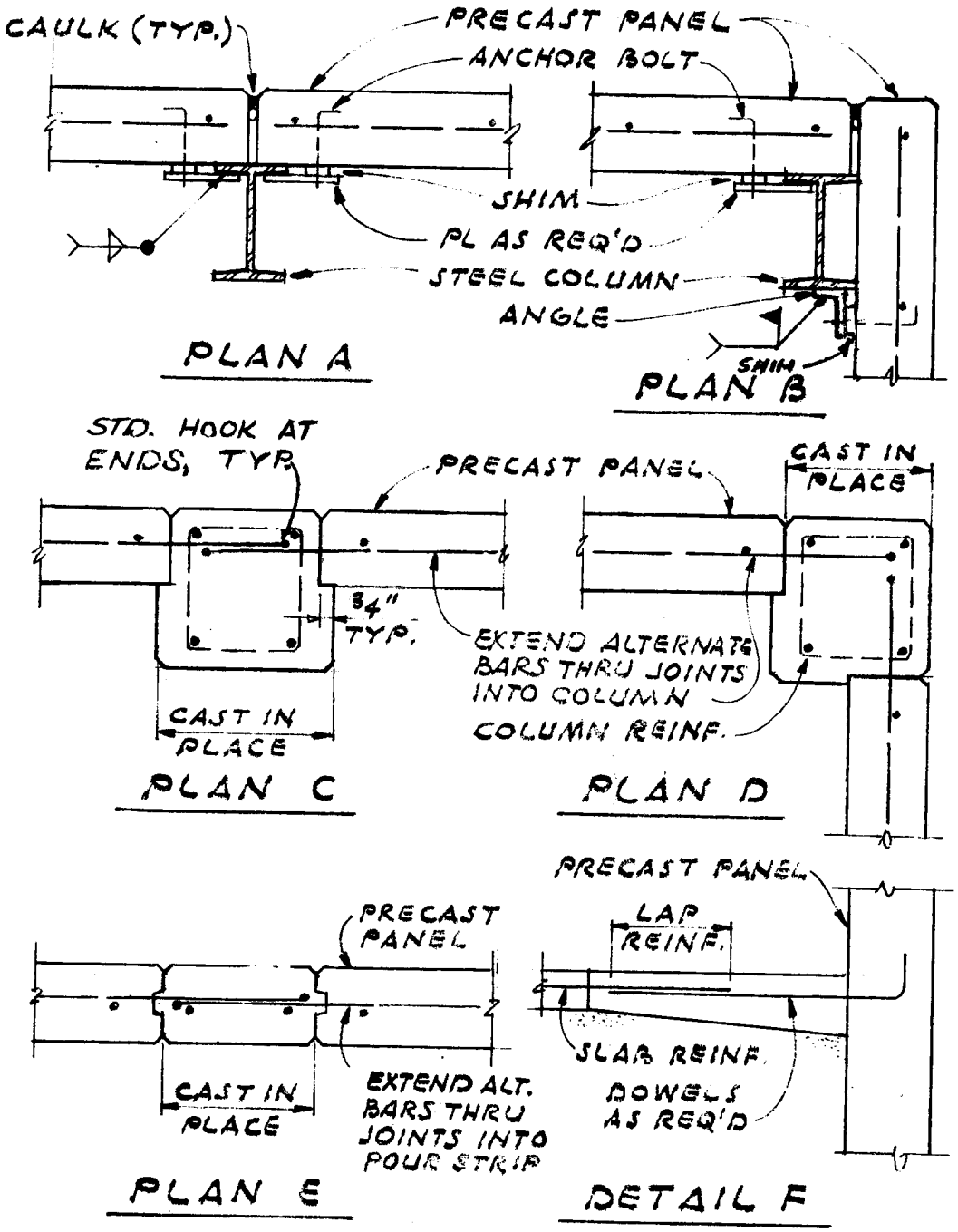

Figure 6-9. Tilt-up and other precast concrete walk-typical details of attachment.

d. Typical details. Refer to figure 6-9 for typical details of attachments.

6-9. Masonry shear walls.

a. General design criteria. This section prescribes the criteria for the structural design of shear walls of unit masonry construction. The basic reference document is TM 5-809-3/AFM 88-3, Chap 3. For calculation of shearing stress, masonry shear walls will be designed to resist 1.5 times the forces determined in accordance with SEAOC 2E2.

b. Basic requirements. Unit masonry will be reinforced with deformed bars for axial, flexural, shear, and diagonal tension stresses as determined by design calculations. Additional reinforcing bars are prescribed for use around openings, at corners, at anchored intersections, and at the ends of wall panels (for example, at control joints). The minimum reinforcement prescribed in the manual is intended to provide empirical requirements relative to damage control (ductility and boundary conditions). Layout and details of construction will be compatible with the application of the rules for modular measure.

c. *Special requirements.*

(1) *Excluded materials.* The following materials will not be used as part of the structural frame:

(a) In Zone 2, glass block, non-load-bearing masonry units, plastic cement, masonry cement, and mortar with more than 1-¼ parts by volume of hydrated lime or lime putty per one part of portland cement.

(b) In Zones 3 and 4, glass block, non-load-bearing masonry units, plastic cement, masonry cement, and mortar with more than ½ part by volume of hydrated lime or lime putty per one part of portland cement.

(2) *Stacked bond.* Since a running bond pattern is the strongest and most economical, the criteria in this manual are based upon each wythe of masonry being constructed in a running bond pattern. The use of a stacked bond pattern will be restricted to reinforced walls essential to the architectural treatment. Filled-cell masonry or grouted masonry will be used. For filled-cell masonry, open end blocks will be used and so arranged that closed ends are not abutting and all head joints are made solid, and bond beam units shall be used to facilitate the flow of grout.

(3) *Height limit.* Unit masonry construction will not be used for shear walls where the height of the building exceeds the limits given in SEAOC Table l-G.

(4) *Joint reinforcement.* Joint reinforcement will not be used in the calculation of shear strength.

(5) *Mechanical splices.* Mechanical splices will develop 125 percent of the specified yield strength of the bar in tension, except that for compression bars in columns that are not part of the seismic system and are not subject to flexure, the compressive strength only need be developed.

(6) *Cavity walls.* Cavity walls are not practical for use as shear walls because each wythe individually, and both wythes acting together in proportion to their relative rigidities, must be capable of carrying the required loads. It is usually much more economical to construct a two-wythe cavity type wall by using an interior structural wythe and an exterior nonstructural anchored veneer wythe. See chapter 11 for requirements for anchored veneer.

(7) *Drawings. The* locations of control joints and the identification of structural and nonstructural walls and partitions for all masonry construction will be shown on preliminary and contract drawings. On contract drawings, complete details for masonry, reinforcement, and connections to other elements will be shown. Detailing procedures outlined in ACI-315 are generally applicable to reinforced masonry.

(8) *Frame qualifications.* Masonry columns or pilasters will not be used to qualify a structure for a complete vertical load carrying space frame so as to increase the R_w-factor above that of a bearing wall system. Masonry columns will not be" used in rigid frame construction.

d. Types of reinforced masonry walls. Masonry will conform to one of the following basic types: reinforced grouted masonry, reinforced hollow masonry, or reinforced filled-cell masonry.

(1) Reinforced grouted masonry is that type of construction made with two wythes of masonry units in which the collar joint between is reinforced and filled solidly with concrete grout. The grout may be placed as the work progresses or after the masonry units are laid. Collar joints will be reinforced with deformed bars, both vertical and horizontal. Reinforcement and embedded items such as structural connections and electrical conduit shall be positioned so as to allow proper placement of grout. All units will be laid in running bond with full shoved head and bed mortar joints. Masonry headers will not project into grout spaces. Clipped-brick headers will be used where the appearance of masonry headers is required. See figure 6-10.

(2) Reinforced hollow masonry is that type of construction made with a single wythe of hollow masonry units (concrete or clay blocks), reinforced vertically and horizontally with steel bars, and cores and voids containing reinforcing bars or embedded items are filled with grout as the work progresses. See figure 6–11.

(3) Reinforced filled-cell masonry is that **type** of construction made with a single wythe of hollow masonry units, reinforced vertically and horizontally with deformed steel bars, and *all* cores and voids are filled solidly with grout after the wall is laid. See figure 6-12.

e. *Bond beams.* Bond beams will be located as indicated in figure 6-13. Reinforcement bars in bond beams will be lapped as prescribed in TM 5–809-3/AFM 88-33, Chap 3 at splices, at intersections, and at corners. Bar splices will be staggered. Bond beams will be provided at top of masonry foundation wall stems, below and at top of openings or immediately above lintels, at floor and roof levels, and at top of parapet walls. Intermediate bond beams will be provided as required to conform to the maximum spacing of horizontal bars. However, whenever the height is not a multiple of this normal spacing, the spacing may be increased up to a maximum of 24 inches, provided the bond beams are supplemented with joint reinforcement. One line of joint reinforcement will be provided for each 8-inch increase in the spacing. No additional bond beam will be required

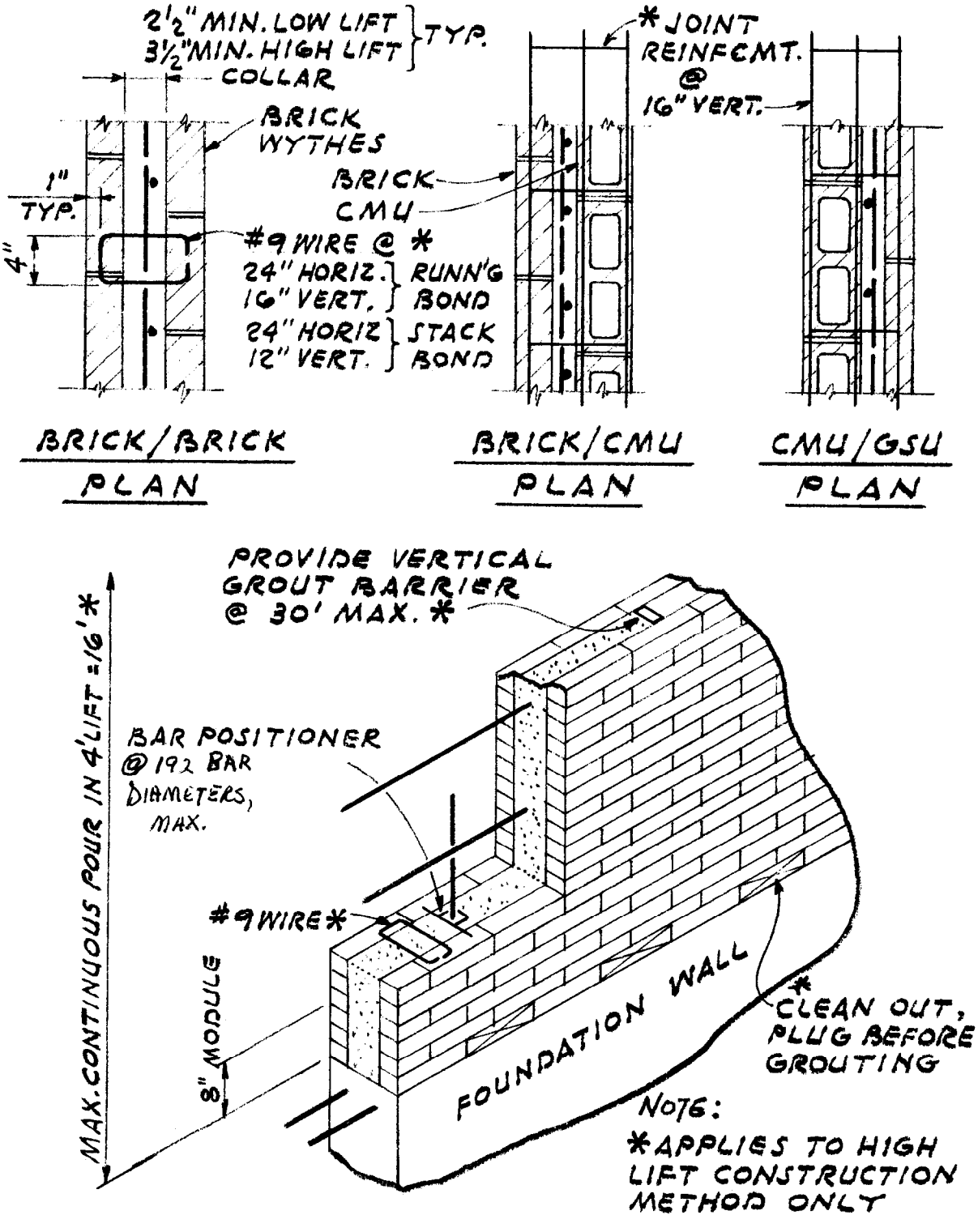

Figure 6--10. Reinforced grouted masonry.

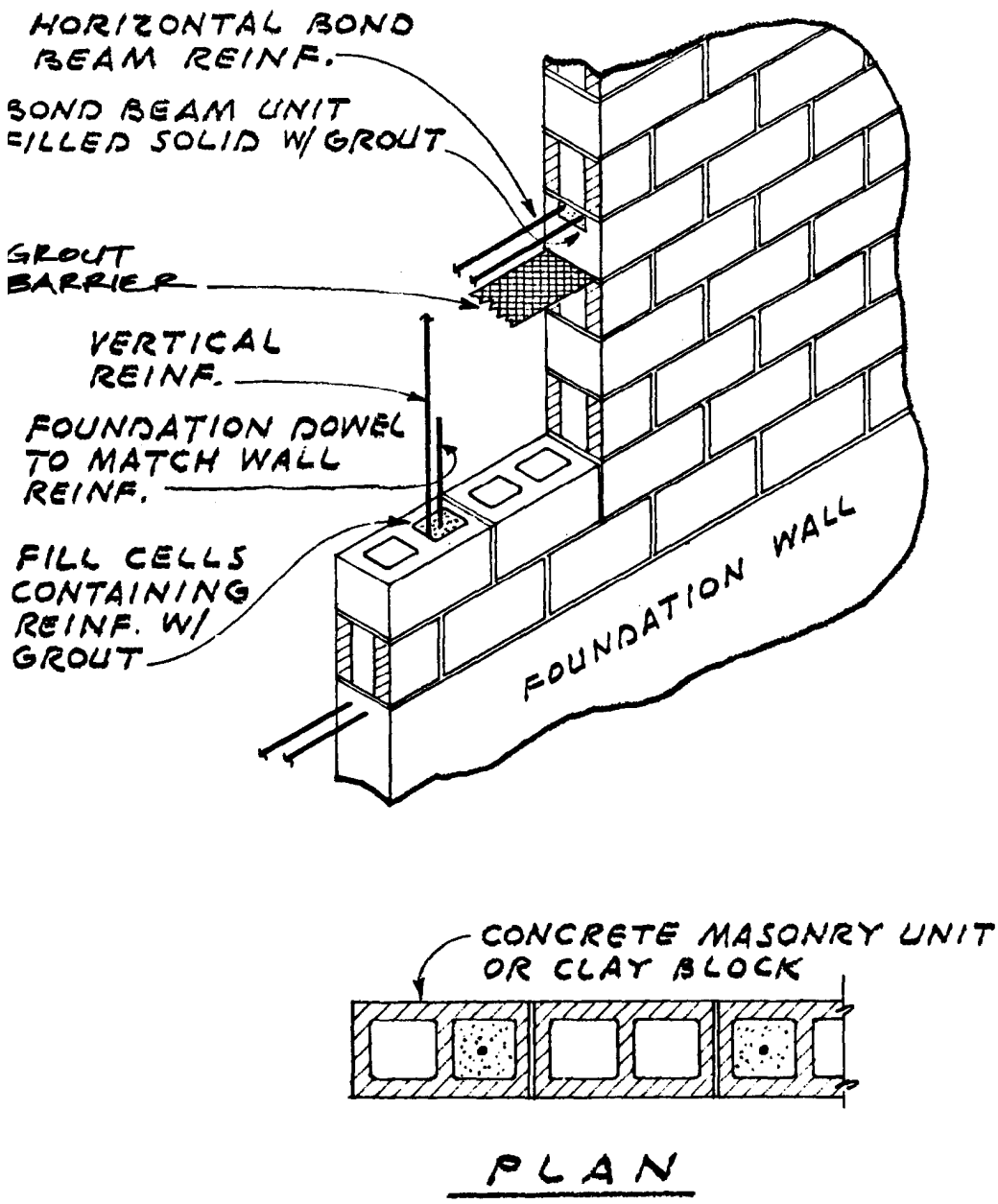

Figure 6-11. Reinforced hollow masonry.

between window openings that do not exceed 6 feet in height, provided the prescribed supplemental joint reinforcement is installed. To facilitate the placement of steel or concrete core fill, the top bond beam for filler walls or partitions may be placed in the next-to-top course. The area of bond beam reinforcement will be included as part of the minimum horizontal steel.

f. Control joints. Control joints may be required under the provisions of TM 5-809–3/AFM 88–3, Chap 3. The placement of control joints must be coordinated with the seismic design. Because the control joints provide a complete separation of the masonry, the location of control joints frees the length of wall panels and, in turn, the rigidity of the walls, the distribution of seismic forces, and the resulting unit stresses. Therefore, adding, eliminating, or relocating control joints will not be permitted once the structural design is complete. Control joints will never be assumed to transfer bending moments or diagonal tension across the joint: joint reinforcement and bars in nonstructural bond beams will be terminated at control joints. Deformed bars in structural bond beams (those acting as chords and collectors) will be made continuous for the length of the diaphragm. Refer to figure 6-14.

g. *Design considerations.*

(1) *Wall weights.* Refer to TM 5-809-3/AFM 88-3, Chap 3 for the, average weight of concrete

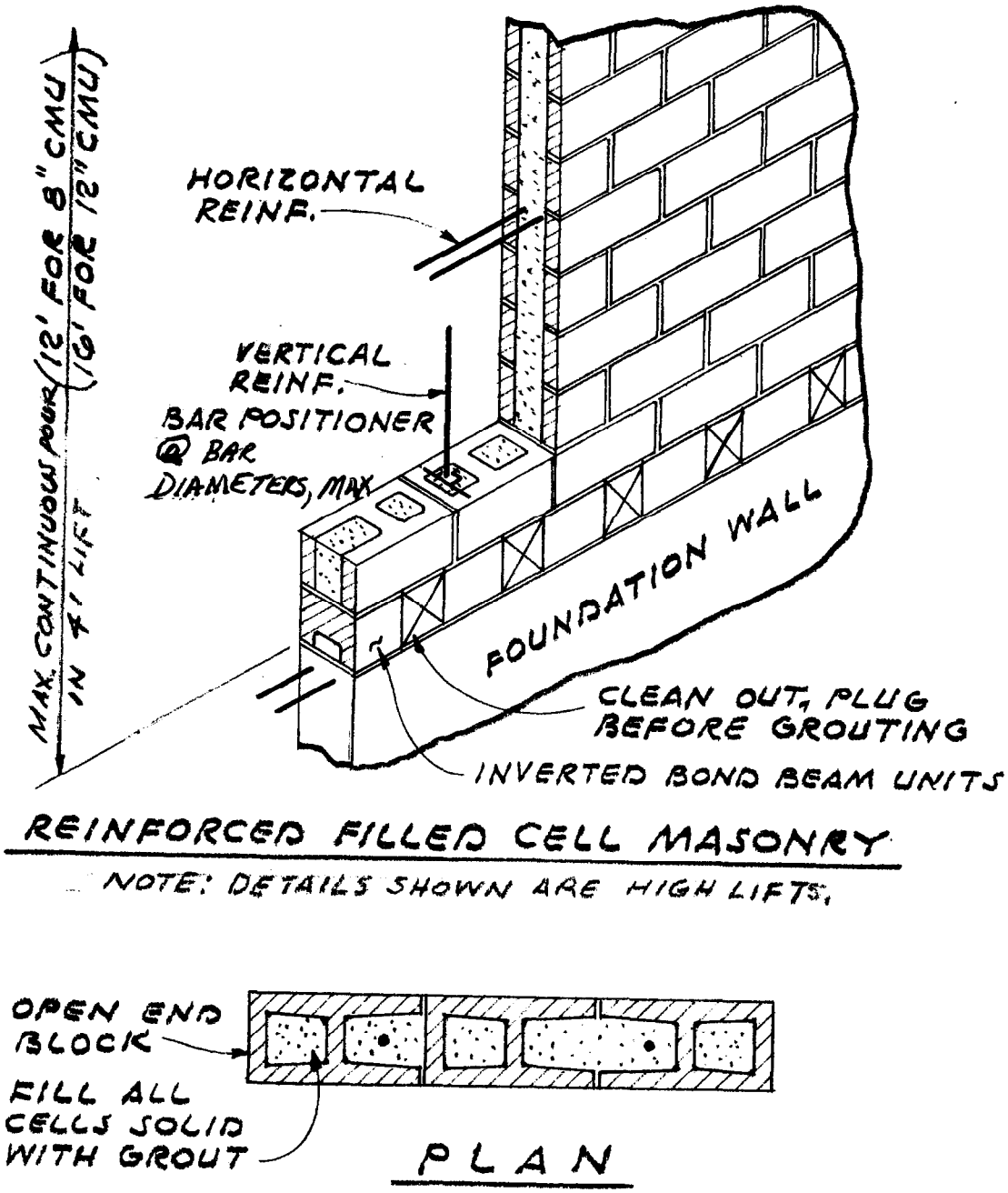

Figure 6-12. Reinforced filled-cell masonry.

masonry units and the average weight of completed walls.

(2) Shearing stresses in hollow masonry. Refer to TM 5–809-3/AFM 88–3, Chap 3 for the assumed effective area for hollow masonry and the equivalent thickness of hollow *masonry* for computing stress due to shear parallel to the face.

(3) *Boundary elements.* When masonry shear walls are used as part of a dual system (i.e., systems D1c and D1d in SEAOC Table l-G), special vertical boundary elements are required. These elements will be composed of structural steel or reinforced concrete in accordance with ACI 21.5.3.

h. Reinforcing. Typical reinforcement is shown in figure 6-14.

(1) *Minimum reinforcing.* Unit masonry must be reinforced not only for structural strength but to provide ductile properties and to hold it together in the event of severe seismic disturbance. All walls and partitions will be reinforced as required by structural calculations, but in no case with less than the minimum area of steel and the maximum spacing of bars prescribed below. The

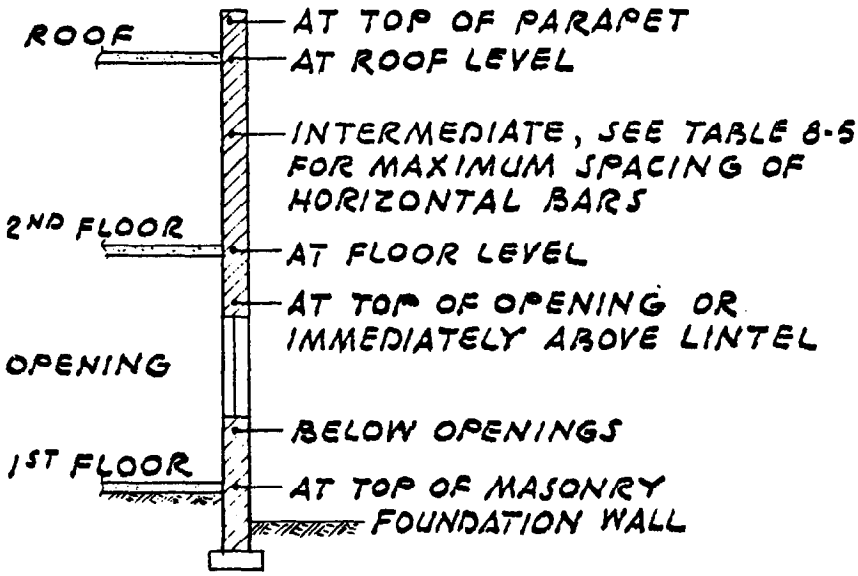

Figure 6–13. Location of bond beams.

minimum reinforcement and the maximum spacing of bars is controlled by the type of wall and the seismic zone. Table 6-1 applies. Only reinforcement that is continuous in any wall panel will be considered in computing the minimum area of reinforcement. Joint reinforcement used for crack control or mechanical bonding may be considered as part of the total minimum horizontal reinforcement but will not be used to resist computed stresses. (For Zone 1 structures, the exception for wall reinforcement under table 6–1 applies. Where the exception applies, masonry construction will conform to TM 5–809–3/AFM 88–3, Chap 3. Further additional bars will be provided around openings, at corners, at anchored intersections in wall piers, and at ends of wall panels as prescribed elsewhere in this chapter. Vertical bars in walls will be spliced as prescribed in TM 5–809-3/AFM 88-3, Chap 3.

(2) *Reinforcing in shear walls.* In Zones 3 and 4, reinforcement required to resist in-plane shear will be terminated with a standard hook or with an extension of proper embedment length beyond the reinforcing at the end of the wall section. The hook or extension may be turned up, down, or horizontally. Provisions will be made not to obstruct grout placement. Wall reinforcement terminating in columns or beams will be fully anchored into these elements.

(3) *Reinforcing in wall piers.* Horizontal reinforcement will be in the form of ties as shown in figure 6-14.

(4) *Column ties.* In Zones 3 and 4, the spacing of column ties will not be more than 8 inches the full height for columns stressed by tensile or compressive axial overturning forces due to the seismic loads of chapter 3; 8 inches for the tops and bottoms of all other columns for a distance of one-sixth of the clear column height, but not less than 18 inches nor the maximum column dimension. Tie spacing for the remaining column height will be not more than 16 bar diameters, 48 tie diameters, or the least column dimension, but not more than 18 inches. Hooks in column ties will have a minimum turn of 135 degrees plus an extension of at least six bar diameters, but not less than 4 inches at the free end of the bar, except that where the ties are placed in the horizontal bed joints, the hook will consist of a 90-degree bend having a radius of not less than four bar diameters plus an extension of 32 bar diameters.

(5) *Reinforcing in stacked bond.* In Seismic Zone 2, the minimum horizontal reinforcement ratio shall be .0007 bt. This ratio shall be satisfied by uniformly distributed joint reinforcement fully embedded in mortar or by horizontal reinforcement spaced not over 4 feet and fully embedded in grout. In Seismic Zones 3 and 4 the minimum horizontal reinforcement ratio shall be .015 bt. If open end units are used and grouted solid, then the minimum horizontal reinforcement ratio shall be .0007 bt.

(6) *Reinforcing at wall openings.* Since the area around wall openings is vulnerable to failure, supplemental reinforcement is prescribed herein. For purposes of this paragraph, the term *jamb bars* will means bars of the same size, number, extent, and anchorages as the typical vertical stud reinforcement in that wall, and in no case less than one bar, #4 or larger. Refer to figure 6–15.

(a) Case Z. Case I applies to all openings in nonstructural partitions. over 100 square inches,

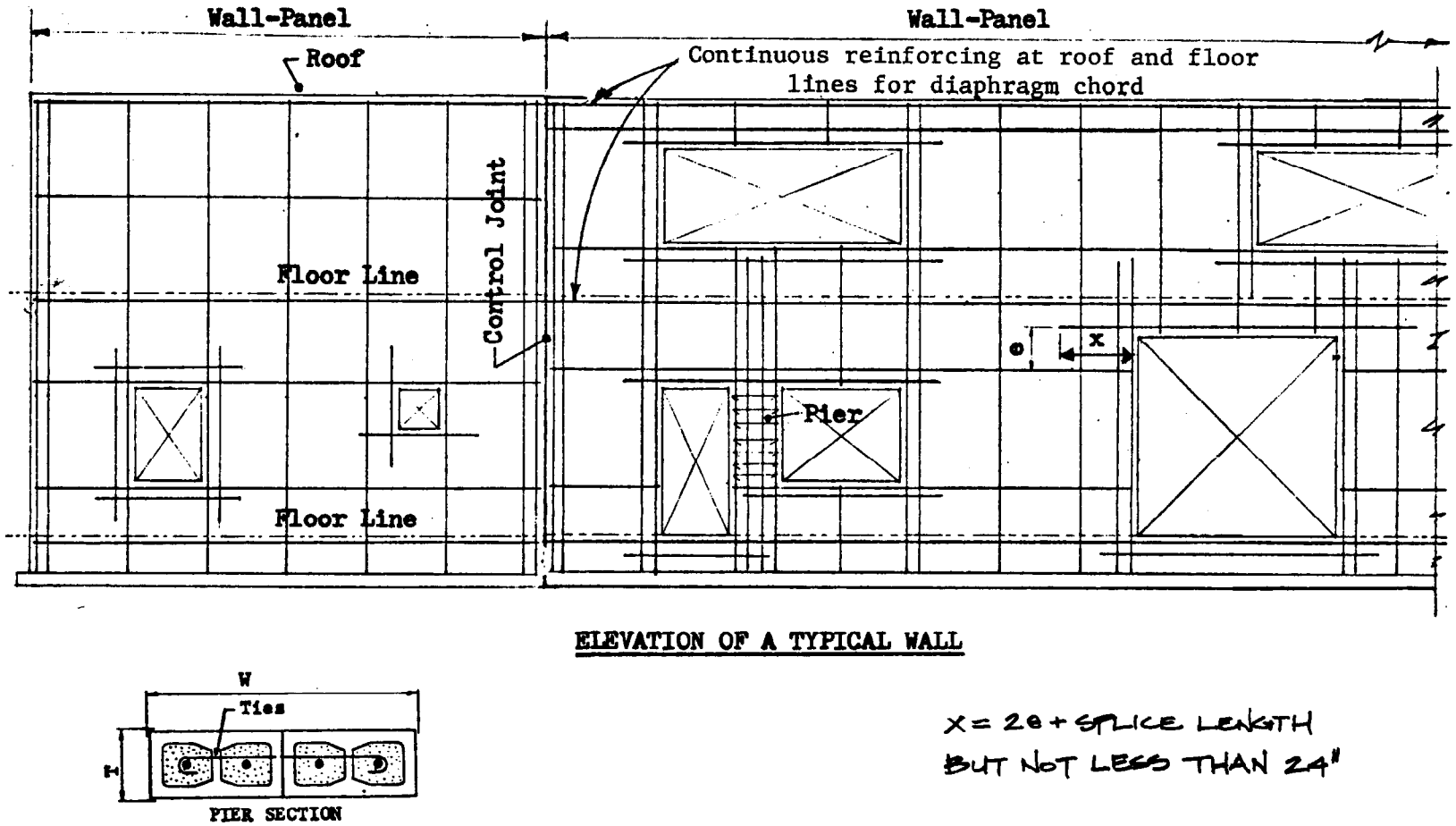

Figure 6-14. Typical wall reinforcement—reinorced masonry.

	Total Minimum Reinforcement (percent)[1,2]			Maximum spacing of bars (inches)					
				Vertical bars			Horizontal bars		
	Seismic Zone			Seismic Zone			Seismic Zone		
	4&3	2	1[3]	4&3	2	1[3]	4&3	2	1[3]
structural	0.20	0.20	0.15	24	36	60	48	60	72
Nonstructural	0.15	0.15	0.15	48	60	72	84	84	96

NOTES

[1]The total minimum reinforcement is the sum of the vertical and horizontal reinforcement; not less than 1/3 of the prescribed total minimum reinforcement will be used in either direction.

[2]The percentage of area reinforcement is based on gross area of wall (nominal dimensions).

[3]Exception: In seismic zone 1, one-story structures with cave heights not exceeding 14 feet; and two-story and three-story structures with story heights not exceeding 12 feet, the maximum spacing of vertical reinforcement in structural and nonstructural walls will be 6 feet and 8 feet, respectively. Vertical reinforcement will also be provided at each side of each opening and each corner. Horizontal reinforcement will be provided at top of footings and at the bottom and top of openings. These walls must be capable of resisting seismic zone 1 loads.

Table 6-1. Minimum wall reinforcement.

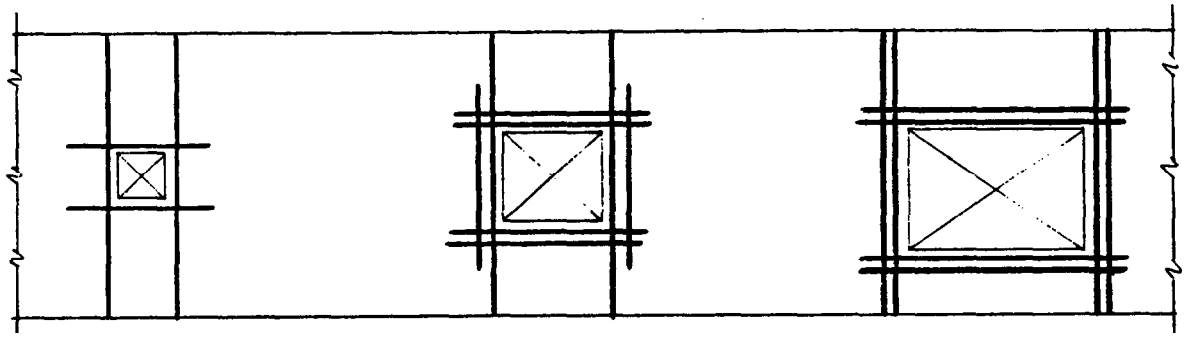

Case I Case II Case III

Refer to paragraph 6-9h (2) for application of Cases I, II, and 111.

Figure 6-15. Reinforcement around wall openings.

and any opening in structural partitions or exterior walls that is 2 feet or less both ways but over 100 square inches. Jamb bars will be provided on each side of the opening *and* at least one bar, #4 or larger, will be provided at top and bottom of the opening. The lintel bars above the opening may serve as the top horizontal bar, and a bond beam bar at the bottom of the opening may serve as the bottom horizontal bar.

(b) *Case II.* Case II applies to exterior walls and structural partitions for any opening that exceeds 2 feet but is not over 4 feet in any direction. The perimeter reinforcement will be the same as in Case I *plus* additional reinforcement as follows at least one bar, #4 or larger, will be provided on all four sides of the opening in addition to the bars required in Case I and shall extend not less than 40 bar diameters or 24 inches, whichever is larger, beyond the corners of the opening.

(c) *Case III.* Case III applies to any opening that exceeds 4 feet in either direction in exterior walls or structural partitions. The perimeter reinforcement will be the same as in Case II, except

that vertical jamb bars will be provided in lieu of the shorter vertical bars.

i. Additional details. See figure 6-16.

6-10. Wood stud shear walls.

a. General design criteria. The criteria used to design wood stud shear walls are presented in SEAOC, chapter 5 and the additional criteria in this section.

b. Allowable shears for plywood. Details of plywood sheathed walls are shown in figure 6–17, and the allowable shears are shown in figure 6–18. The usual one-third increase for short-term seismic loads is not applicable to these allowable shear values. When a combination of plywood and other materials is used, the shear strength of the walls will be determined by the values permitted for plywood alone.

c. *Allowable shears for sheathing other than plywood.* Figure 6-19 gives in tabular form the maximum height-width ratios and allowable shear per lineal foot for wood stud shear walls with various types of sheathing or plaster except for plywood sheathed walls. The usual one-third increase for short-time seismic loads is not applicable to these allowable shear values. The strength of any wood stud shear wall may be made up of a combination of the materials listed. In no case shall the allowable shears for combinations of materials exceed 600 pounds per lineal foot.

d. Deflections. Procedures for calculating the deflection of wood frame shear walls are not yet available. The maximum height-width limitations given herein are presumed to satisfactorily control deflections. Relative stiffnesses of wood stud shear walls will be measured by the effective lineal width of walls or piers between openings.

e. Let-in brace. Except when used in combination with diagonal sheathing or plywood, a l-inch by 4-inch brace let into the studs may be used to resist an additional horizontal force not exceeding 1,000 pounds, provided the total value of the shear wall does not exceed 600 pounds per foot. Each such brace shall be nailed to each stud and to the top and bottom plates with two 8d nails.

f. Wall tie-down. The end studs of any plywood sheathed shear wall and/or shear wall pier will be tied down in such a manner as to resist the overturning forces produced by seismic forces parallel to the shear wall. This overturning force is sometimes of sufficient magnitude to require special steel attachment details. A commonly used detail is shown on figure 6-20. Tie-downs will be computed using the required stresses for wood and its fastenings increased one-third for seismic forces.

6-11. Steel stud shear walls.

a. Description of system. Steel studs may be used in lieu of wood studs in structural bearing walls. To function as shear walls, steel-stud walls need bracing. In principle, plywood sheathing could be used, but there are no available allowable shear values. Instead, it is customary to use diagonal braces made of steel straps welded to the face of the steel studs. Sheathing such as plywood or gypsum board may be used to serve architectural purposes such as containing insulation and backing up finishes.

b. Design criteria. This is system A3 in SEAOC Table 1–G the R_w-value is 4. In this manual this category envisions structures with lateral forces that come from a roof and the upper part of walls, and that are small in magnitude. The system is limited to buildings of one story. The system will not be used for lateral support of masonry or precast panels.

c. *Detailed design requirements.* Figure 6-21 shows a few typical details for this light construction. Figure 6–21, sheet 1, shows a steel-strap brace that can be used to resist a maximum load of 1,000 pounds per brace. Note several essential features of that detail:

(1) The end of the diagonal strap is concentric with the stud and track and is welded all around to those two members.

(2) The vertical component of force is transmitted into the base via a structural steel angle whose upstanding leg is welded to the stud at locations very close to the flanges of the stud. This angle detail holds the base of the stud and prevents stresses and deflections that would occur in the track if the stud were connected solely to the track with the anchor bolt at some distance away.

(3) At least two straps are needed in each wall, arranged so that there is sufficient tension capacity in both directions of design force.

(4) The bottom track cannot be used to resist uplift by bending of the track web (as noted in the paragraph above concerning the brace detail).

(5) Both flanges of all studs must be braced against torsional buckling.

(6) Screws may not be used to resist forces in pullout.

(7) Provisions must be made for pretensioning the straps or otherwise ensuring that they are not loose.

(8) There will be some sheathing that will provide additional stiffening and some redundancy; if there is no sheathing, the designer should provide remedial solutions.

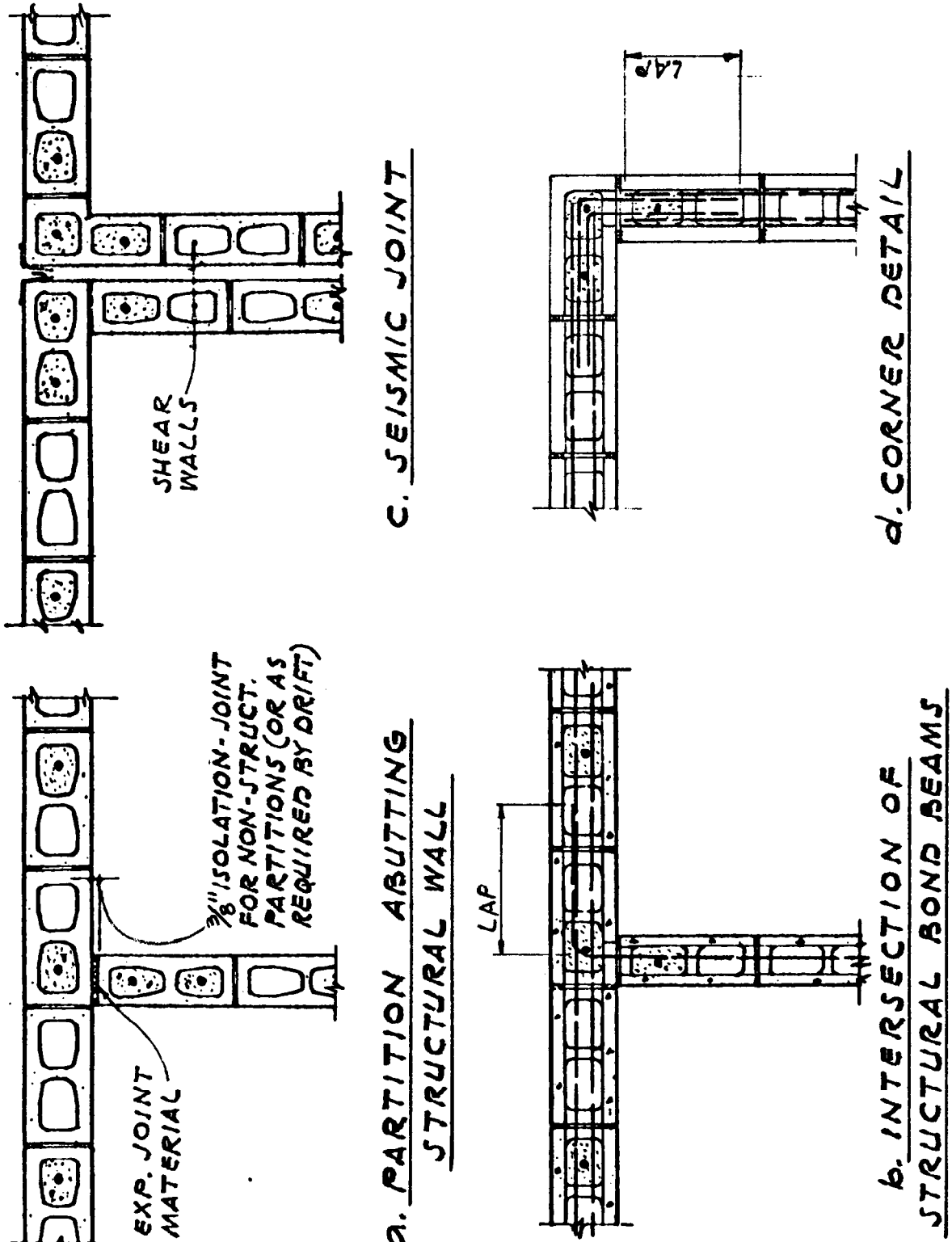

Figure 6–16. Masonry wall details.

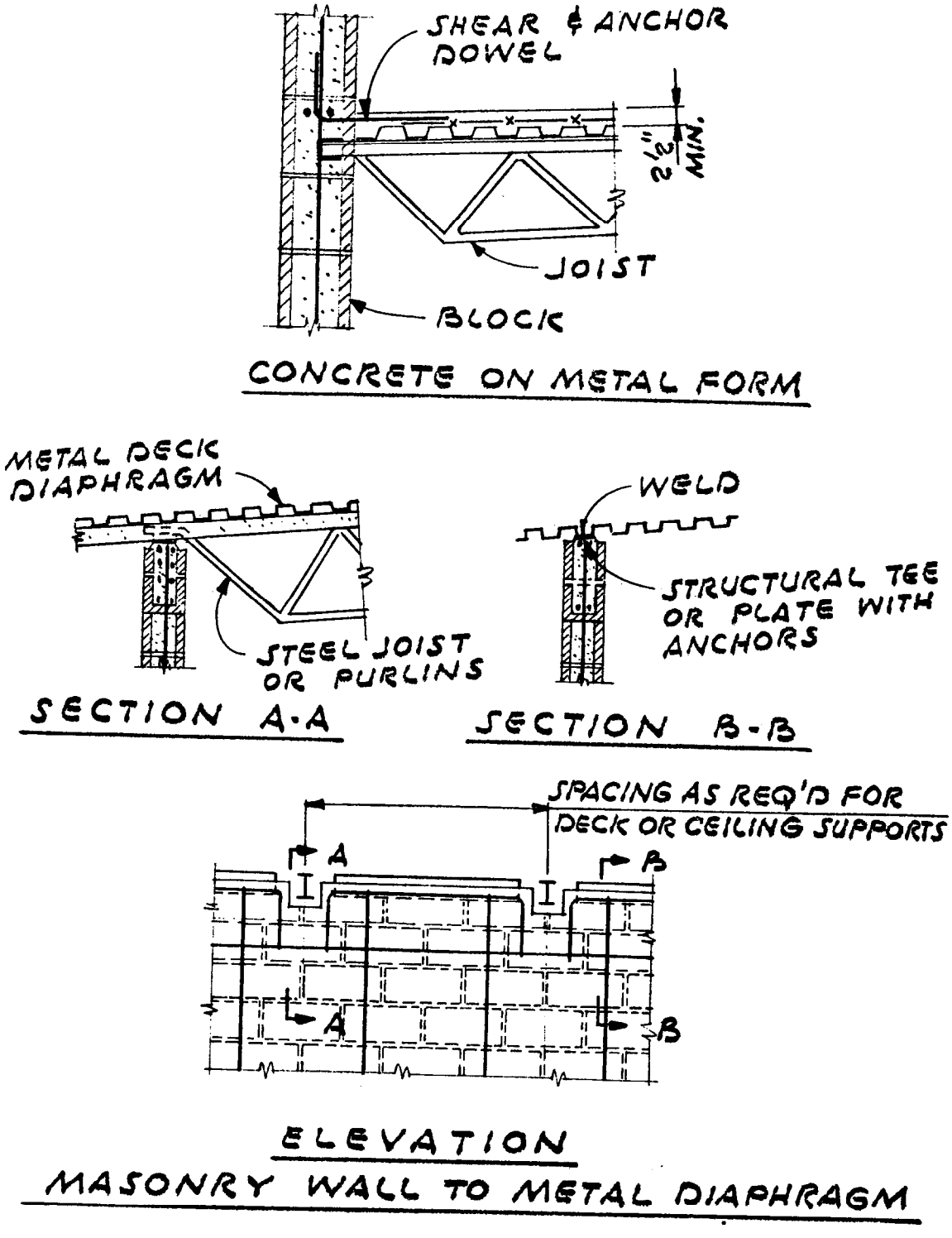

Figure 6–16. Continued.

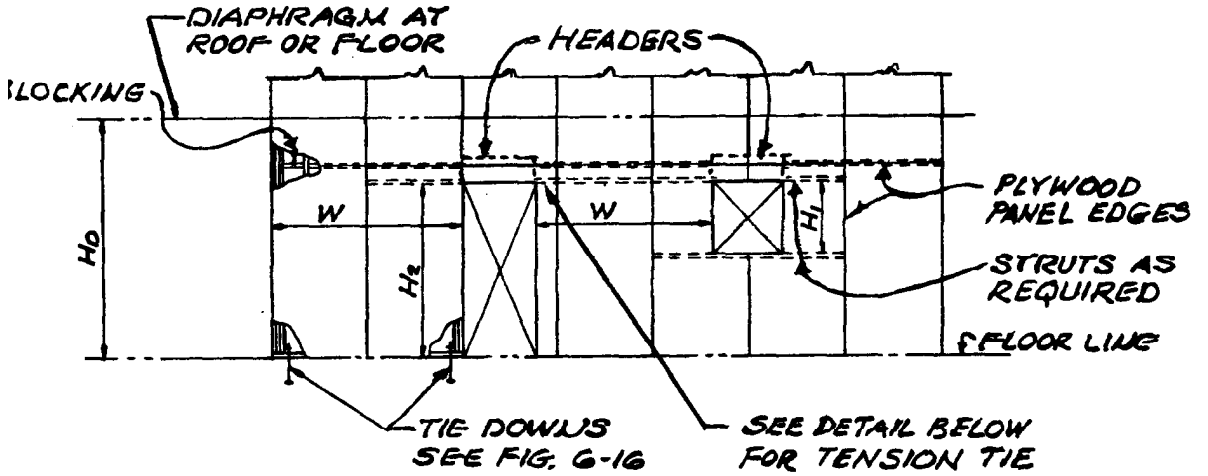

NOTES:

1. FOR VALUES OF PLYWOOD SHEATHED SHEAR WALLS, SEE FIG. 6-15.
2. HEIGHT-WIDTH RATIO OF PLYWOOD SHEATHED SHEAR WALLS WILL BE LIMITED TO 3½ TO 1. $H_o/_W$ WILL BE USED FOR THE HEIGHT-WIDTH RATIO UNLESS STRUTS ARE DEVELOPED AT THE TOP AND BOTTOM OF THE OPENINGS IN WHICH CASE $H_1/_W$ OR $H_2/_W$ MAY BE USED.
3. THESE SHEAR WALLS SHALL NOT BE USED TO RESIST FORCES DUE TO CONCRETE NOR MASONRY MASSES, EXCEPT FOR VENEERS, SHOWER STALLS AND MINOR CONCRETE FILLS SUCH AS EQUIPMENT BASES.
4. THE USUAL 33⅓% INCREASE FOR SHORT-TIME SEISMIC LOADS IS NOT APPLICABLE TO THE ALLOWABLE SHEAR VALUES GIVEN IN FIG. 6-22.

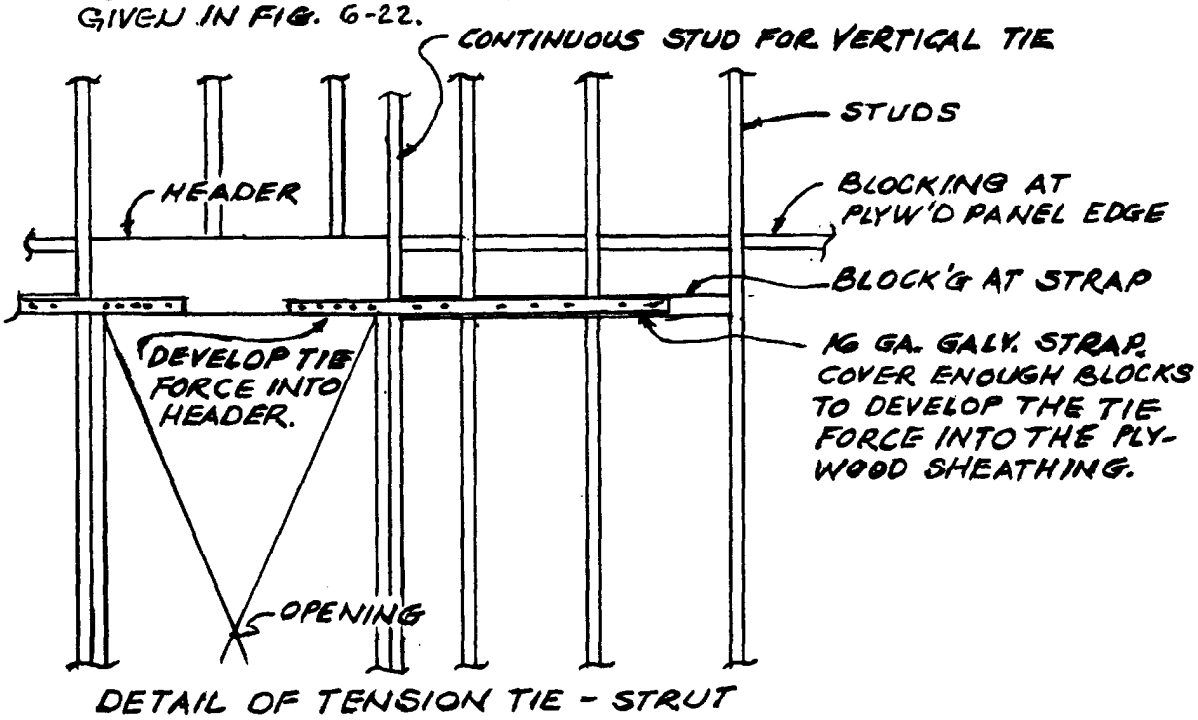

Figure 6-17. Plywood-sheathed wood stud shear walls.

Recommended Shear (pounds per foot) for APA Panel Shear Walls with Framing of Douglas-Fir, Larch, or Southern Pine[a] for Wind or Seismic Loading[b]

Panel Grade	Minimum Nominal Panel Thickness (in.)	Minimum Nail Penetration in Framing (in.)	Panels Applied Direct to Framing					Panels Applied Over 1/2" or 5/8" Gypsum Sheathing				
			Nail Size (common or galvanized box)	Nail Spacing at Panel Edges (in.)				Nail Size (common or galvanized box)	Nail Spacing at Panel Edges (in.)			
				6	4	3	2[e]		6	4	3	2[e]
APA STRUCTURAL I grades	5/16	1-1/4	6d	200	300	390	510	8d	200	300	390	510
	3/8	1-1/2	8d	230[d]	360[d]	460[d]	610[d]	10d[f]	280	430	550	730
	7/16			255[d]	395[d]	505[d]	670[d]		—	—	—	—
	15/32			280	430	550	730		—	—	—	—
	15/32	1-5/8	10d[f]	340	510	665	870	—	—	—	—	—
APA RATED SHEATHING; APA RATED SIDING[g] and other APA grades except species Group 5.	5/16 or 1/4[c]	1-1/4	6d	180	270	350	450	8d	180	270	350	450
	3/8			200	300	390	510		200	300	390	510
	3/8	1-1/2	8d	220[d]	320[d]	410[d]	530[d]	10d[f]	260	380	490	640
	7/16			240[d]	350[d]	450[d]	585[d]		—	—	—	—
	15/32			260	380	490	640		—	—	—	—
	15/32	1-5/8	10d[f]	310	460	600	770	—	—	—	—	—
	19/32			340	510	665	870	—	—	—	—	—
APA RATED SIDING[g] and other APA grades except species Group 5	5/16[c]	1-1/4	Nail Size (galvanized casing) 6d	140	210	275	360	Nail Size (galvanized casing) 8d	140	210	275	360
	3/8	1-1/2	8d	160	240	310	410	10d[f]	160	240	310	410

(a) For framing of other species: (1) Find species group of lumber in the NFPA National Design Spec. (2)(a) For common or galvanized box nails, find shear value from table above for nail size for STRUCTURAL I panels (regardless of actual grade). (b) For galvanized casing nails, take shear value directly from table above. (3) Multiply this value by 0.82 for Lumber Group Ill or 0.65 for lumber Group IV.

(b) All panel edges backed with 2-inch nominal or wider framing. Install panels either horizontally or vertically. Space nails 6 inches oc along intermediate framing members for 3/8-inch and 7/16-inch panels installed on studs spaced 24 inches oc. For other conditions and panel thicknesses, space nails 12 inches oc on intermediate supports

(c) 3/8-inch or APA RATED SIDING 16 oc is minimum recommended when applied direct to framing as exterior siding

(d) Shears may be increased to values shown for 15/32-inch sheathing with same nailing provided (1) studs are spaced a maximum of 16 inches oc, or (2) if panels are applied with long dimension across studs

(e) Framing at adjoining panel edges shall be 3-inch nominal or wider and nails shall be staggered where nails are spaced 2 inches oc.

(f) Framing at adjoining panel edges shall be 3-inch nominal or wider and nails shall be staggered where 10d nails having penetration into framing of more than 1-5/8 inches are spaced 3 inches oc.

(g) Values apply to all-veneerer plywood APA RATED SIDING panels only APA RATED SIDING-16 oc plywood may be 11/32 -inch , 3/8-inch or thicker . Thickness at point of nailing on panel edges governs shear values.

Typical Layout for Shear Walls

Reprinted with permission from TABLE 22 in APA Design / Construction Guide, © American Plywood Association.

Figure 6-18. Allowable stresses for plywood-sheathed wood stud walls.

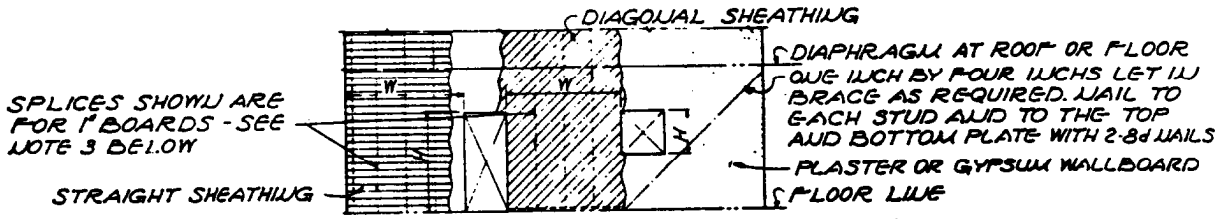

TYPICAL SHEAR WALL ELEVATION

VERTICAL SHEAR WALLS ONE SIDE ONLY	NAILING @ EACH BEARING COMMON UNLESS NOTED	MAXIMUM PIER HEIGHT-WIDTH RATIOS (H/W)	ALLOWABLE SHEAR LBS/LIN. FT.
1" STRAIGHT SHEATHING	2 - 8d	2:1	50
2" STRAIGHT SHEATHING	3 - 16d		40
CONVENTIONAL 1" DIAGONAL SHEATHING 1"x6"	2-8d (3-8d AT BOUNDARIES)	2:1	300
CONVENTIONAL 1" DIAGONAL SHEATHING 1"x8"	3-8d (4-8d AT BOUNDARIES)		
SPECIAL DIAGONAL SHEATHING	3-16d	3½:1	600
LATH & GYPSUM PLASTER	1¾" NO. 13 GAUGE 7/16" DIAMETER HEAD BLUED NAIL @ 5" o.c.	2:1	100
METAL LATH & PORTLAND CEMENT PLASTER	4d BLUED BOX NAILS @ 6" o.c. OR 1½" NO. 11 GAUGE 7/16" DIA. HEAD BARBED NAILS @ 6" o.c.	2:1	200
GYPSUM LATH, PLAIN OR PERFORATED ⅜" WITHOUT BLOCKING & ½" PLASTER	1⅝" NO. 13 GAUGE 7/64" DIAMETER HEAD BLUED NAIL @ 5" o.c.	1½:1	100
GYPSUM SHEATHING BOARD ½"x2'x8' WITHOUT BLOCKING	1¾" NO. 11 GAUGE 7/16" DIAMETER HEAD DIAMOND POINT. GALVANIZED @ 4" o.c.	1½:1	75
GYPSUM SHEATHING BOARD ½"x4' WITH BLOCKING	1¾" NO. 11 GAUGE 7/16" DIAMETER HEAD DIAMOND POINT GALVANIZED @ 4" o.c.	1½:1	175
GYPSUM WALLBOARD (DRYWALL) ½" WITHOUT BLOCKING	5d OR @ 7" o.c.	1½:1	100
	1¼"x.098 GA. @ 4" o.c.	1½:1	125
GYPSUM WALLBOARD (DRYWALL) ½" WITH BLOCKING	5d OR @ 7" o.c.	1½:1	125
	1¼"x.098 GA. @ 4" o.c.	1½:1	150
GYPSUM WALLBOARD (DRYWALL) ⅝" WITH BLOCKING	6d @ 4" o.c.	1½:1	175
GYPSUM WALLBOARD (DRYWALL) ⅝" TWO-PLY WITH BLOCKING	6d @ 9" o.c. BASE PLY 8d @ 7" o.c. FACE PLY	1½:1	250

NOTES:

1. VALUES SHALL BE MODIFIED FOR PARTICULAR SPECIES OF WOOD IN ACCORDANCE WITH PERCENTAGES BELOW

SPECIES	% OF TABULATED VALUES	SPECIES	% OF TABULATED VALUES	SPECIES	% OF TABULATED VALUES
DOUGLAS FIR (WEST COAST & INLAND)	100%	SPRUCE (SITKA)	75%	PINE (PONDEROSA)	65%
LARCH	100%	FIR (WHITE)	70%	PINE (SUGAR)	65%
HEMLOCK (WESTERN)	85%	CEDAR (WESTERN RED)	65%	PINE (LODGEPOLE)	65%
REDWOOD	80%	PINE (IDAHO WHITE)	65%	SPRUCE (ENGLEMANN)	65%

2. IF USED UNDER CONDITIONS OTHER THAN CONTINUOUSLY DRY, VALUES FOR WOOD SHEAR WALLS SHALL BE REDUCED TO 67% OF THE TABULATED VALUES.
3. DIAGONAL OR STRAIGHT SHEATHING - END JOINTS OF ADJACENT BOARDS WILL BE SEPARATED BY AT LEAST TWO JOIST OR RAFTER SPACES WITH AT LEAST TWO BOARDS BETWEEN JOINTS ON SAME SUPPORT.
4. SPECIAL DIAGONAL SHEATHING SHALL CONSIST OF TWO LAYERS OF 1" CONVENTIONAL DIAGONAL SHEATHING AT 90° TO EACH OTHER AND ON THE SAME FACE OF STUDS.
5. TYPE OF NAILS, SEE APPLICABLE AGENCY GUIDE SPECIFICATIONS.
6. THESE SHEAR WALLS SHALL NOT BE USED TO RESIST FORCES DUE TO CONCRETE NOR MASONRY MASSES, EXCEPT FOR VENEERS, SHOWER STALLS AND MINOR CONCRETE FILLS SUCH AS EQUIPMENT PADS.
7. THE USUAL 33⅓% INCREASE FOR SHORT-TIME SEISMIC LOADS IS NOT APPLICABLE TO THESE ALLOWABLE SHEAR VALUES.

Figure 6-19. Typical wood stud shear walls of various materials other than plywood

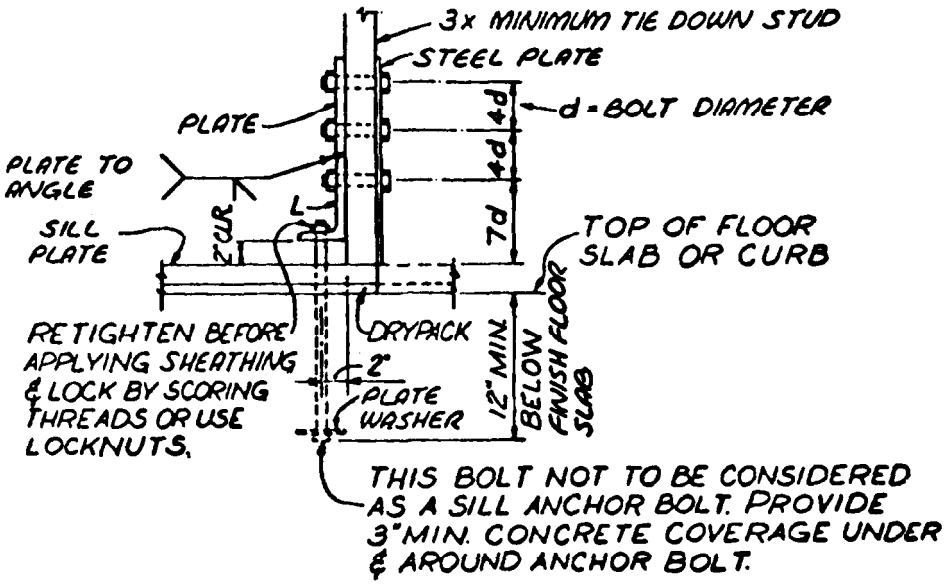

TYPICAL TIE-DOWN DETAIL A

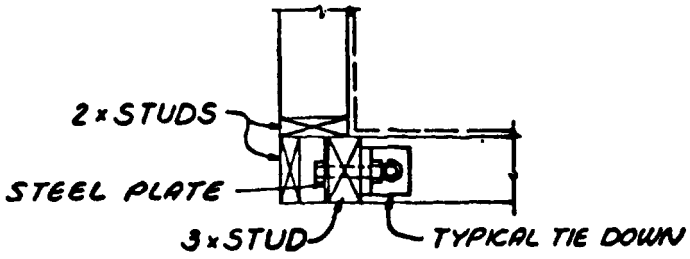

PLAN B

CORNER DETAIL AT TIE-DOWN

NOTE: Angle, bolts, plates, footings, etc., to be designed for uplift.

Figure 6-20. Wood stud walls-typical tie-down details.

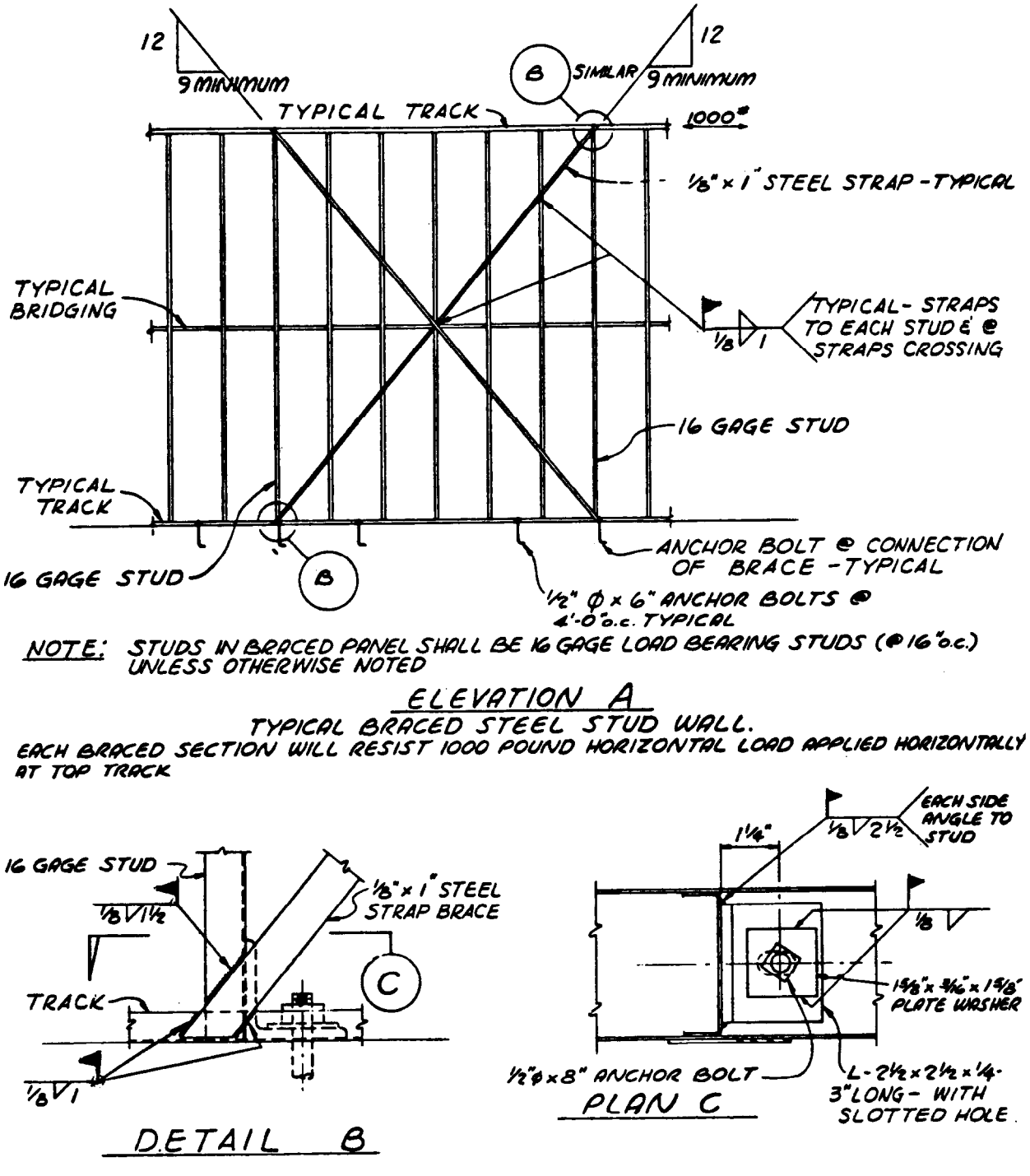

Figure 6–21. Steel stud shear walls-typical details

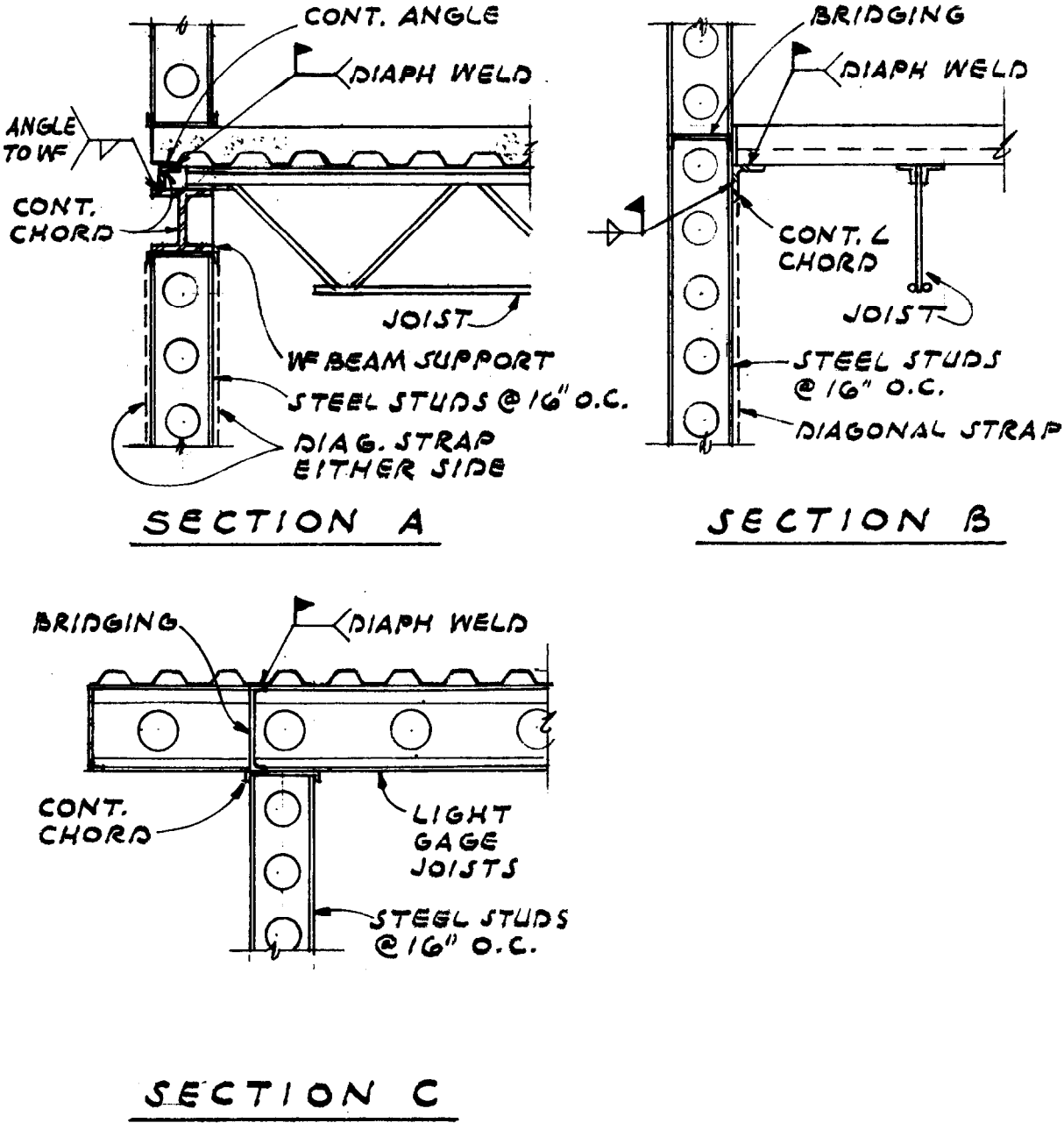

Figure 6-21. Continued

CHAPTER 7

BRACED FRAMES

7-1. Introduction. This chapter prescribes the criteria for the design of vertical braced frames in seismic areas, indicates principles and factors governing the design, and illustrates typical details of construction.

7-2. General.

a. Function. Vertical braced frames are used to transmit lateral forces from the diaphragm above to the diaphragm below or to the foundations. They are similar to shear walls in their general function and their stiffness compared to the other type of vertical element, the moment resisting frame.

b. Definition of braced frame. In SEAOC lB, a braced frame is defined as an essentially vertical truss system of the concentric or eccentric type that is provided to resist lateral forces. Note that for braced frames, as for shear walls, the R_w-value depends on whether the frame is in a bearing-wall or building-frame system.

c. Redundancy. A sufficient number of braced frames should be provided so that a failure of a single member or connection will not result in instability of the entire lateral force resisting system.

d. Braced frame types. The principal types of braced frame are the familiar concentric braced frame (CBF), the relatively new eccentric braced frame (EBF), and the knee-braced frame (KBF).

e. Design criteria. The criteria governing the design of vertical braced frames will be as prescribed in this chapter.

(1) *Structural steel braced frames.* Structural steel braced frames will conform to the requirements of SEAOC 4G for concentric braced frames and SEAOC 4H for eccentric braced frames.

(2) *Reinforced-concrete braced frames. Concen*tric braced frames, permitted only in Zones 1 and 2, will conform to the requirements of ACI 21.5. No procedures have been developed for eccentric braced frames of reinforced concrete, because such frames would not be likely to demonstrate desirable performance.

(3) *Wood braced frames.* Wood braced frames will be designed by using normal procedures illustrated in many easily obtainable texts and are not covered in this manual. The National Forest Products Association's *National Design Specification for Wood Construction* applies.

7-3. Concentric braced frames (CBF).

a. Eccentricities. Although the frame is called "concentric", there may be minor eccentricities between member centerlines at the joints, and these eccentricities are provided for in the design. Such eccentricities do not mean that the frame is an EBF: the EBF has unique properties and design methods.

b. Concentric braced frame types. Frames are usually of steel and may be of various forms. The X-braced panels, consisting of diagonal tension members and vertical compression members, are frequently used (fig 7-1, part a). Trussed portal bracing or K-bracing is frequently used to permit unobstructed openings (fig 7–1, part b). See restrictions in SEAOC 4G3b. Braced frames with single diagonal members capable of taking compression as well as tension are used to permit flexibility in the location of openings (fig 7–1, part c). See restrictions in SEAOC 4G1c. Chevron bracing is also a common system for buildings (fig 7–1, part d and fig 7–2). The deflection of braced frames is readily computed using recognized methods.

c. Materials. CBFs are usually made of steel. There are no SEAOC provisions for concrete frames; in fact, CBFs of concrete are not permitted in Zones 3 and 4 (SEAOC Table l–G).

d. Direction of brace force. Braces that are designed for compression will, of course, act also in tension. Braces may be designed for tension only, but the use of such braces is discouraged because they tend to stretch under earthquake tension, then go slack during the load reversal, then snap when tension is applied in a subsequent cycle. SEAOC requires a minimum slenderness ratio (SEAOC 4G1a) with certain exceptions for manufactured metal buildings and nonbuilding structures.

e. *Effect of bracing on columns.* The vertical component of brace force is transferred into the column and adds to the gravity load on the column. When brace forces are relatively small and the column design is governed by the gravity loads, the frame should be considered a building system, using R_w of 8 as prescribed in SEAOC Table l-G. When braces are few and heavily loaded, their vertical components may govern the design of the columns. In such cases the frame should be considered a bearing wall system, using smaller R_w-factors as given in SEAOC Table l–G. The concern with braces of the bearing wall category is that their true, as-built ultimate capac-

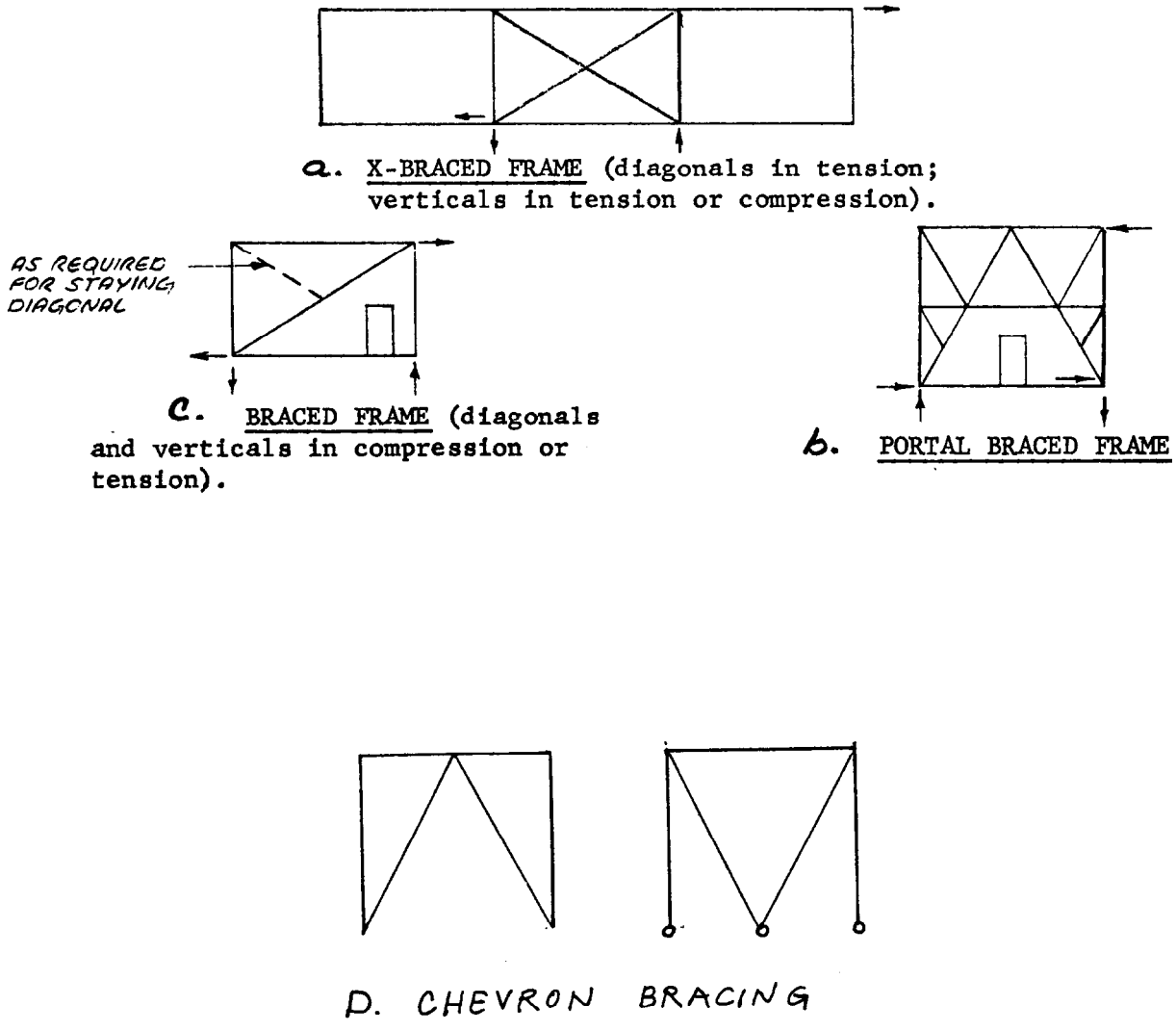

Figure 7-1. Braced frames.

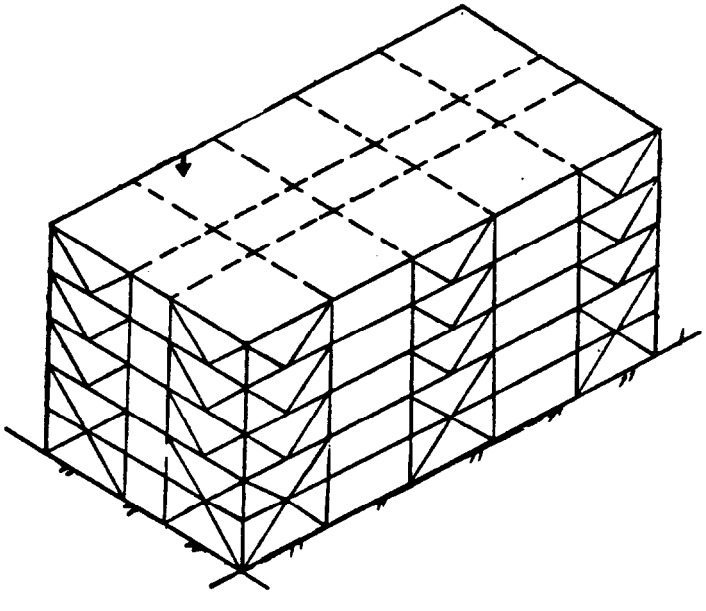

Figure 7-2. Bracing for a tier building.

ity may be greater than is assumed in design, and, therefore, that such braces could overload the column to the point of collapse.

f. Configurations. Diagonal X-bracing is common in tension-only bracing. Single diagonal braces are more common in compression-tension bracing. The orientation of single braces should be alternated so that not all of the braces are in tension or compression at the same time (SEAOC 4G1c). Chevron bracing may have an interaction with gravity load carrying beams; accordingly, special requirements are provided in SEAOC 4G3a. K-bracing has a potentially dangerous effect on columns; accordingly, it is subject to the requirements of SEAOC 4G3b.

g. Connections. SEAOC 4G2 provides the requirements for design of connections.

h. Low buildings. SEAOC 4G4 provides for buildings not over two stories and for light roof structures such as penthouses. Manufactured metal buildings are intended to be included in this category. In planning the use of manufactured metal buildings, the designer is cautioned that these buildings can perform well only when they are kept light and simple, as they are intended to be; they may have poor performance if extra weight, such as masonry veneer, is added, or if they are used as elements of a more complex system.

7-4. Eccentric braced steel frames (EBF).

a. Definition. An EBF is a steel braced' frame designed in accordance with SEAOC 4H. At least one end of each brace intersects a beam at a point offset from the beam intersection with the column or with the opposing brace (see fig 7–3). The short section of the beam between opposing braces, or between a brace and the beam-column intersection, is called the "link beam" and is the element of the frame intended to provide inelastic cyclic yielding.

b. Purpose. The intent of the eccentric braced frame design is to provide a ductile link which will yield in lieu of buckling of its braces when the frame experiences dynamic loads in excess of its elastic strength. Although they are usually easier to detail, they are more complex to design than CBFs, and they are most useful in Zones 3 and 4.

c. *Characteristics.* To take advantage of the ductility of the link, it is important that all related framing elements be strong enough to force the link to yield and that they maintain their integrity through the range of forces and displacements

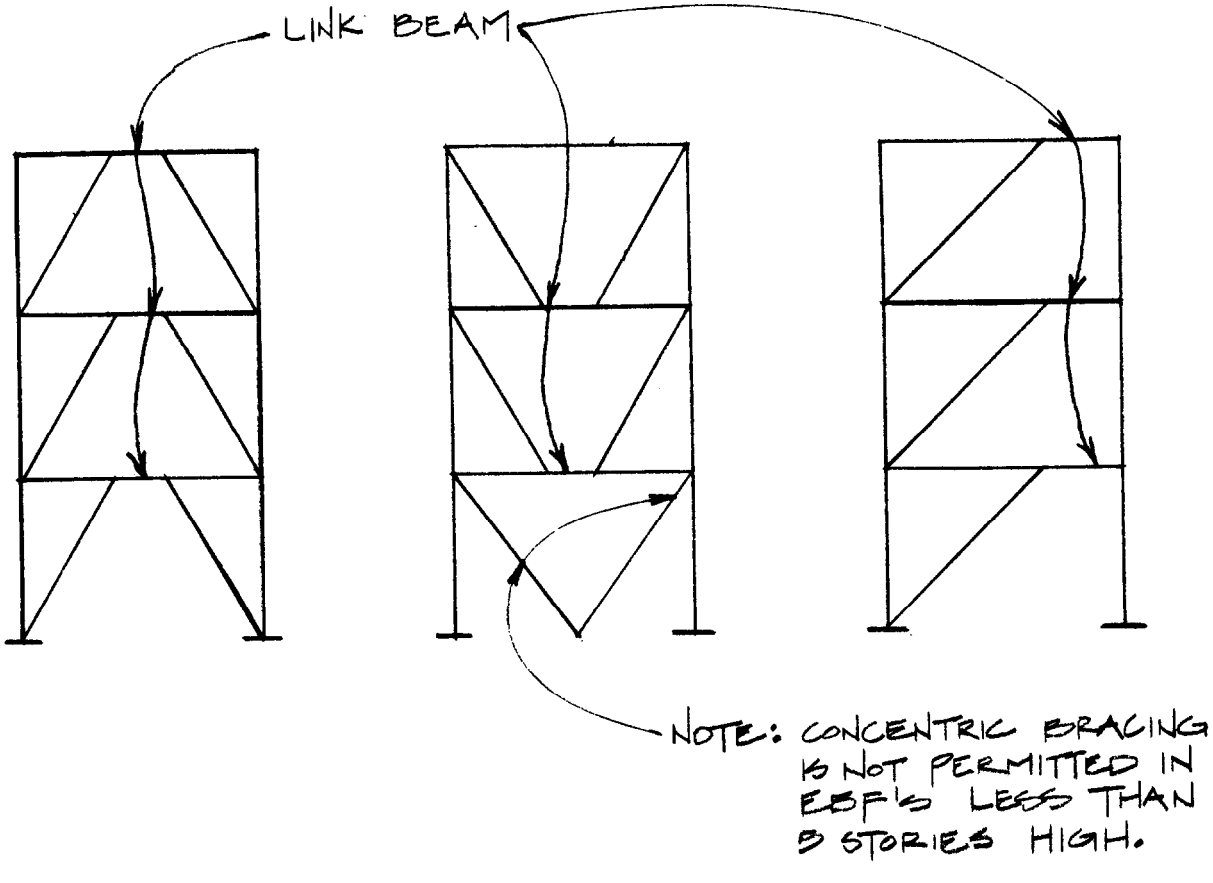

Figure 7–3. Eccentric braced frame configurations.

developed during the yielding of the link. The braces are the most vulnerable of the framing elements because seismic forces are by far the dominant forces in their design. Other elements, such as columns and collector beams, are less vulnerable, since their seismic loads constitute a smaller percentage of their total loads and since, frequently, there are redundant load paths for portions of the forces they carry. The rotation demand on the link beam is a multiple of the lateral drift of the frame as a whole, a multiple that is a function of the geometry of the frame (see figure 7-4). Link beams can yield in shear, in bending, or in both shear and bending at the same time. Which yield mechanism governs is a function of the relationship of link length to the ratio of its bending strength to shear strength. Where the length of the link beam is less than 1.6 Ms/Vs, the yielding is almost entirely in shear. Where the length is greater than 2.6 Ms/Vs, the yielding is primarily in bending. Where the length is between 1.6 Ms/Vs and 2.6 Ms/Vs, both shear and bending yield will occur. Since link beams that yield in shear are considered to have the most stable energy dissipating characteristics, most of the EBF research has tested the cyclic inelastic capacity of link beams with shear yielding at large rotations. Consequently, most of the design provisions are concerned with limiting the link beam shear yield rotation to less than the maximum cyclic test rotations and then requiring details indicated by the tests as necessary to ensure that this rotation can occur through a number of cycles without failure.

d. Design criteria The specific criteria governing the design of eccentrically braced frames is given in SEAOC 4H. It is explained in more detail below.

(1) *Link beam location and stability.* Link beams are the fuses of the EBF structural system and are to be placed at locations that will preclude buckling of the braces. A link beam must be located in the intersecting beam at least at one end of each brace. There are exceptions permitting concentric bracing at the roof level and/or at the bottom level of EBF over five stories in SEAOC 4H14 and 4H15. Compact sections meeting the more restrictive flange-width-to-thickness ratio of $52\sqrt{F_y}$ are required for the beam portions of eccentric braced frames in order to provide the beams with stable inelastic deformation characteristics. The same requirement is used for the beams of special moment resisting space frames.

(2) *Link beam strength. The* basic requirement for link beam strength is given in SEAOC 4H4, which requires that the shear in the link beam web due to prescribed seismic forces be limited to 0.8 Vs. Paragraph 4H2 addresses the concern for the effect that substantial axial loads in the link beam could have on its inelastic deflection performance. It presumes that in shear links the web's capacity is fully utilized in shear and that flanges provide the needed axial and flexural capacity. Shear links with a length less than 2.2 $M_S V_S$ are considered to be controlled by shear. Substantial axial loads occur in some EBF configurations when the link beam is required to transmit horizontal forces to or from the braces. It is recommended that, insofar as it is possible, link beams be located so that they are not required to transmit the horizontal force component of braces or drag struts. Where axial forces in the link cannot be avoided, SEAOC 4H2b requires that the flexural strength used in calculations in SEAOC 4H7 and 4H12 be reduced by the axial stress f_a, giving $M_{RS} = Z(F_Y - f_a)$. The f_a used in SEAOC 4H2b should correspond to the lesser value of the axial force corresponding to yield of the link beam in shear, or that which, when combined with link bending, causes the beam flanges to yield.

(3) Link beam rotation. The link beam rotation, at a frame drift of 3/8 R_W times the drift calculated from prescribed seismic forces, is limited to the values given in SEAOC 4H3. The procedure for calculating the rotations is as follows (refer to fig 7-4):

(a) Perform an elastic analysis of the frame for the prescribed seismic forces, being certain that the analysis includes the contribution of the elastic shear deformation of the link beam.

(b) Calculate 3/8 R_W times the drift angle obtained from the analysis in (a). This angle is denoted as δ in figure 7-4.

(c) Calculate the rotation angle 0, as shown in figure 7–4, for the appropriate configuration. This simplified procedure is slightly conservative, since the elastic curvature of the beam segments between hinges and of the brace deformations have been ignored and would contribute a minor amount of the required deformation. It should be noted that calculation of the rotation by multiplying the elastic deflections of the link beam by $3(R_W/8)$ would be unconservative, since these deflections include elastic effects, such as the axial deformation of the braces, that would not increase proportionally after the link begins to yield.

(4) *Link beam web.* Link beam web doubler plates are prohibited in SEAOC 4H4 because tests have shown that they are not fully effective. The performance of eccentric braced frames relies on the predictability of the strength and strain characteristics of the link beam. It is not considered

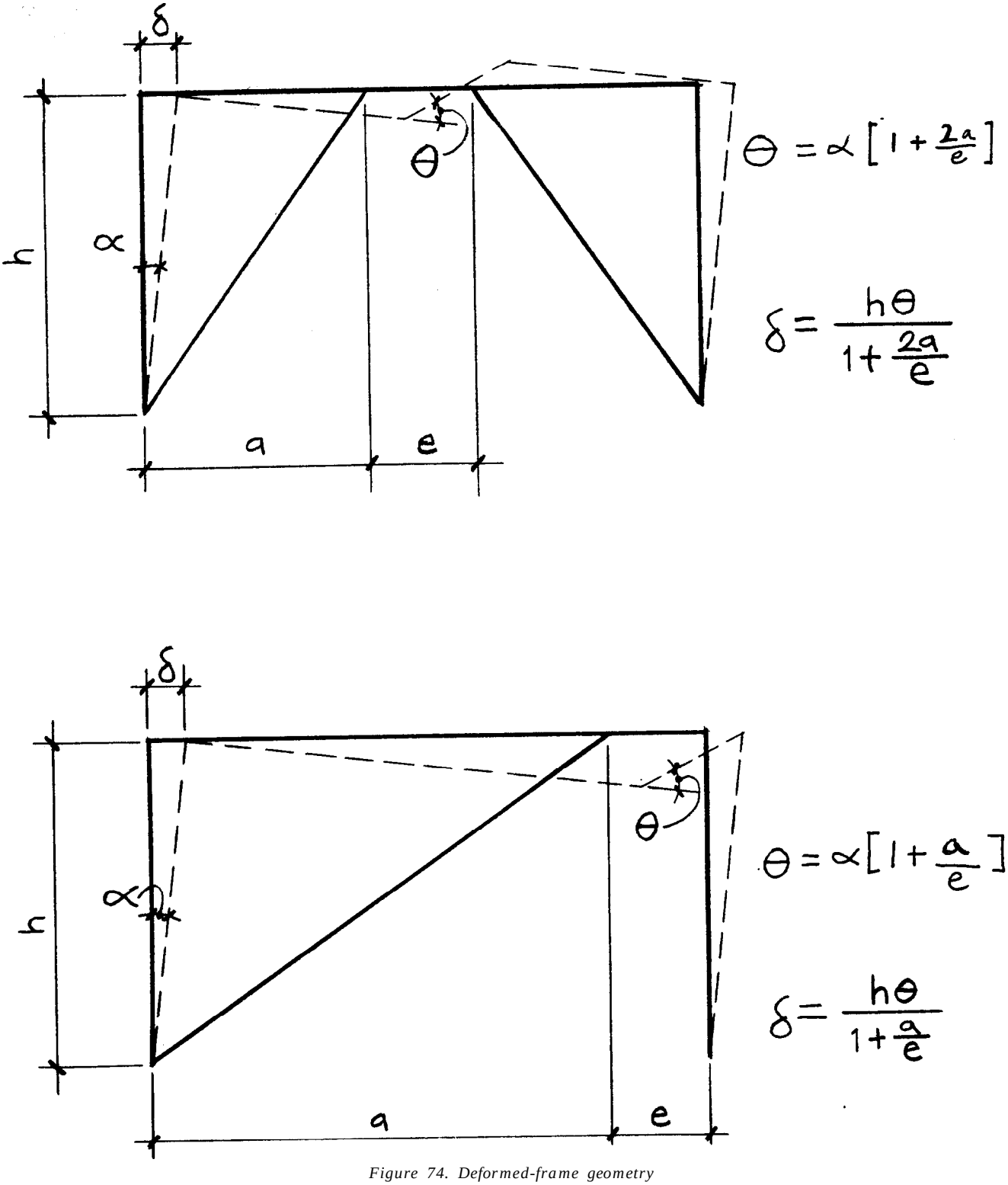

Figure 74. Deformed-frame geometry

advisable to complicate the behavior of the link beam by permitting doublers or allowing holes within it.

(5) *Brace sizing.* Once the link beam size has been selected, the brace size is determined by the requirement given in SEAOC 4H12 that its compressive strength be at least 1.5 times the axial force corresponding to the controlling strength of the link beam. The controlling strength is either the shear strength V_s or the reduced flexural strength M_{RS} described above, whichever results in the lesser force in the brace. Note that once the link beam is selected, the brace forces are determined from its strength, and the brace forces

calculated in the elastic analysis will not govern and will not be used in the brace design.

(6) *Brace-to-beam connection.* SEAOC 4H5 requires that the brace-to-beam connection develop the compressive strength of the brace and that no part of the brace-to-beam connection extend into the web area of the link. The required development may be at the strength level of the connection. The prohibition of the extension of the brace-to-beam connection into the link beam is intended to prevent physical attachments that might alter the strength and deflection characteristics of the link beam. It is not intended to prevent the centerline intersection of brace and link beam from intersecting within the link.

(7) *Column sizing.* SEAOC 4H13 requires that the columns remain elastic at 1.25 times the forces causing yield of the link beam. "Remain elastic at" means the same as "have the strength to resist." The strength, including bending moments, can be calculated using Part 2 of AISC.

(8) *Beam-to-column connections.* For link beams that are adjacent to a column, special connection criteria are given in SEAOC 4H11. Where the link beam is not adjacent to the column, a simpler criterion for connection is given in SEAOC 4H18. Where the simpler connections are used, consideration must be given to transmission of collector forces into the EBF bay.

(9) *Intermediate stiffeners.* SEAOC paragraphs 4H6 through 4H10 provide requirements for various types of stiffeners necessary for the intended performance of the link beams. Stiffener plates as described in those paragraphs are required at the following locations (see fig 7-5):

(a) At the brace end(s) of the link beam (SEAOC 4H6)

(b) At b_f from each end where link beam length is between 1.6 Ms/Vs and 2.6 Ms/Vs (SEAOC 4H6).

(c) At intermediate points along the link beam where shear stresses control or are high (SEAOC 4H7, 4H8).

7-5. Knee-braced frames (KBF).

a. Definition. A KBF is an assembly of a beam, a column, and a brace whose ends are significantly offset from the beam-column joints. The braces in CBFS are either truly concentric or have small eccentricities with the beam-column joints; accord-

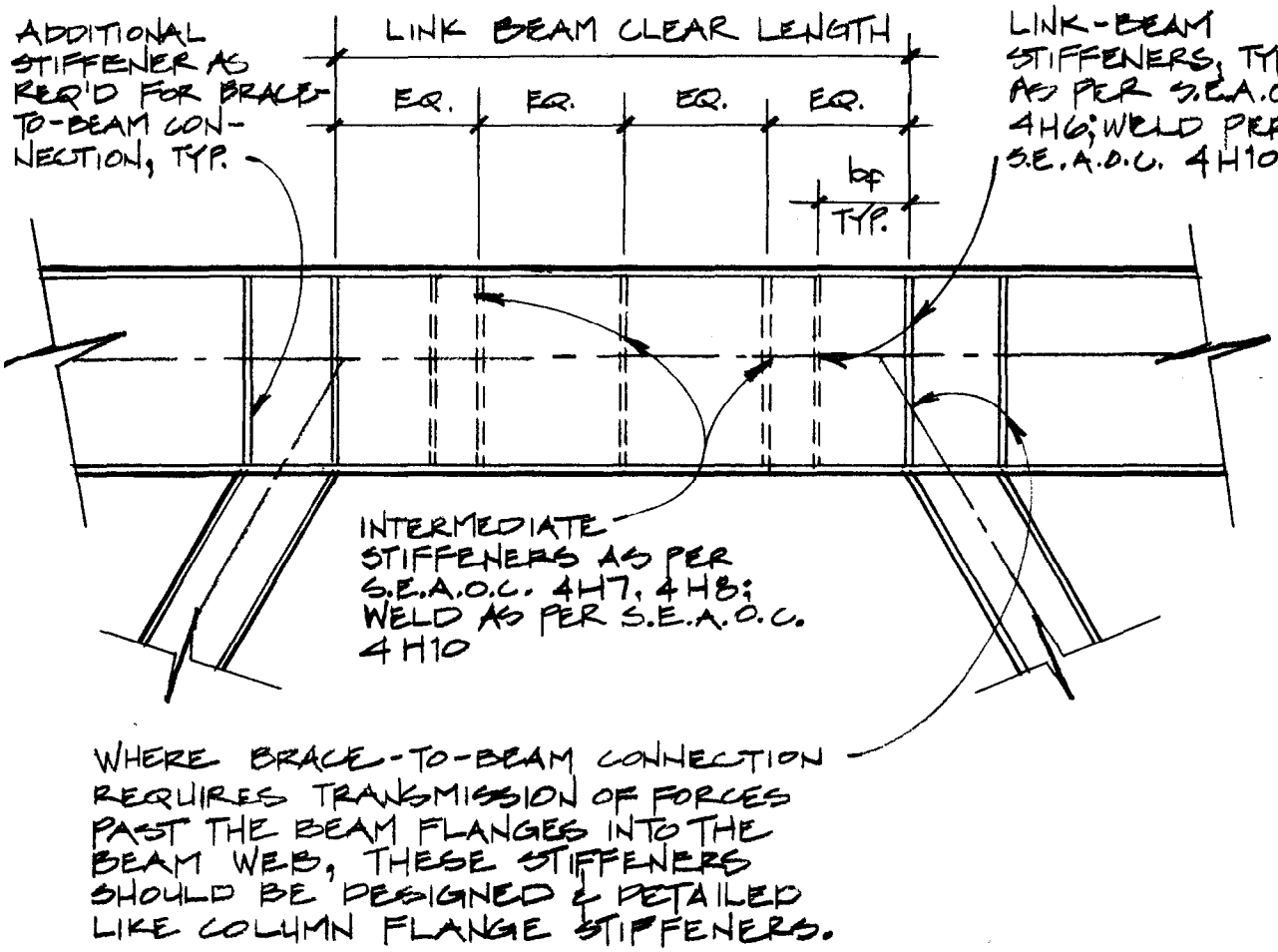

Figure 7-5. Link beam and intermediate stiffeners.

ingly, they induce forces that are primarily axial, while the braces in KBFs have substantial eccentricities and induce significant shearing and flexural as well as axial stresses in the columns and beams.

b. Function. Knee braces were often used in the past to stiffen beams and to provide a measure of lateral stability. Their popularity in recent years has decreased markedly, particularly in zones of high seismicity, because their seismic behavior has become recognized as potentially dangerous.

c. Design considerations. There are two concerns with KBFs. The first concern involves gravity load any change in the load on the beam after the brace is connected induces forces in all the components of the frame; moreover, the brace has a prying effect that can produce surprisingly large forces in the beam-column joint. The sequence of erection and the further application of superimposed loads must be carefully controlled. The second concern involves seismic loads: another set of loads is applied, and while the brace does stiffen the frame, its as-built ultimate capacity may be sufficient to cause bending in the column of suffi cient magnitude to cause collapse.

d. Design criteria. KBFs should be designed with R_w value of 6. Steel KBFs are envisioned in the opening statement of SEAOC 4G, which says that 4G applies to all braced frames except EBFs and also says that members that resist seismic forces totally or partially by shear or flexure shall be designed in accordance with SEAOC 4F (SMRFs), Members of KBFs will be governed by SEAOC 4G1; connections, by SEAOC 4G2. The additional requirements of SEAOC 4F are provided in recognition of the fact that the KBF resembles the moment frame in that the braced corner of the KBF is analogous to the beam-column joint in the moment frame. In the KBF, the beam-column joint need not have moment capacity if it qualifies under the exception in SEAOC 4F1a(2). Other detailed provisions of SEAOC 4F offer relief from the SMRF requirements when design forces are increased, as is the case when the low R_w factors for system A4 (SEAOC Table l-G) are used rather than the high values for SMRF systems.

CHAPTER 8

CONCRETE MOMENT RESISTING FRAMES

8-1. Introduction. This chapter prescribes the criteria for the design of reinforced concrete moment resisting frames of buildings in seismic areas; indicates principles, factors, and concepts involved in seismic design of moment resisting frames gives design data; and illustrates typical details of construction.

8-2. General.

a. Function. Moment frames, like shear walls, are vertical elements in a lateral force resisting system that transmit lateral forces to the ground; however, they differ from shear walls in that their deflections result primarily from flexural deformations of their elements.

b. Frame behavior. The bending stiffness of the moment resisting frame provides the lateral stability of the structure (fig 8–l). It is important to remember that deformations resulting from the dynamic response to a major earthquake are much greater than those determined from the application of the prescribed design forces. This means that a frame that meets the minimum strength requirements of this manual will survive a major earthquake only if it can yield and sustain cyclic inelastic deformations without essential loss of lateral resistance and vertical load capacity. Since normal building materials have very limited energy-absorbing capacity in the elastic range of action, it follows that what is needed is a large energy capacity in the inelastic range. The term ductility is used to denote this property. Providing a ductile seismic frame will allow the structure to sustain tolerable and, in many cases, reparable damage, instead of suffering catastrophic failure. The energy dissipation, ductility, and structural response (deformation) of moment resisting frames depend upon the types of members, connections (joints), and materials of construction used. The behavior of joints is a critical factor in the ability of building frames to resist high-intensity cyclic loading.

8-3. Classification of concrete seismic moment resisting frames. In this manual, concrete moment resisting frames are classified as Types A, B, C, and D according to their particular design provisions and details. The classification ranges from the most ductile and energy absorptive, Type A, to the least ductile, Type D. These types are related to the special moment resisting frame (SMRF), the intermediate moment resisting frame (IMRF), and the ordinary moment resisting frame (OMRF), as defined in SEAOC lB. Type A is equal to the SMRF; Type B is the IMRF with some specific provisions for bar development, and splices of reinforcing; Type C is the OMRF with some specific provisions for continuity of reinforcing, bar development, and splices; Type D is the OMRF designed according to ACI Chapters 1 through 12. The requirements governing the use of Types A, B, C, and D depend upon the seismic zone and its corresponding level of seismic demand; the R_w-value employed and its inferred amount of inelastic energy dissipation capability; and whether the frame is the primary designated lateral force resisting system or is the remaining nondesignated (but gravity load bearing) part of the complete space frame. Table 8–1 shows the reinforced concrete frame systems organized according to the classification of structural systems that is shown in SEAOC Table l-G. Table 8–1 is a refinement of SEAOC Table l-G, showing where the particular frame types are either required or permitted.

8-4. Type A frames. This type is the SEAOC SMRF. It has the highest degree of energy dissipation capacity and is required in the designated moment resisting frame systems in Zones 3 and 4. The basic concept of Type A frames is to provide inelastic energy dissipation by flexural yielding in the girder elements. Columns must, therefore, be stronger than the flexural capacity of the girders, and all elements must have shear resistance and reinforcing bar anchorage capacity capable of developing the full flexural yield level *in* the girders.

a. General design requirements. This paragraph summarizes the provisions given in Chapter 21 of ACI 318–89 and the additional requirements of the manual. In order to provide the girder yield mechanism, the design provisions require:

(1) Compact proportions for the girder and column sections, along with closely spaced seismic ties or hoops for confinement of concrete in the regions of potential flexural yielding.

(2) Column interaction flexural capacity greater than 6/5 times the value required to develop girder yield.

(3) Girder, column, and joint shear capacity greater than shears induced by gravity loads and the strain-hardened flexural capacity of the girders.

(4) Reinforcing bar splices and straight and hooked bar anchorages capable of developing the strain-hardened yield of the girder steel.

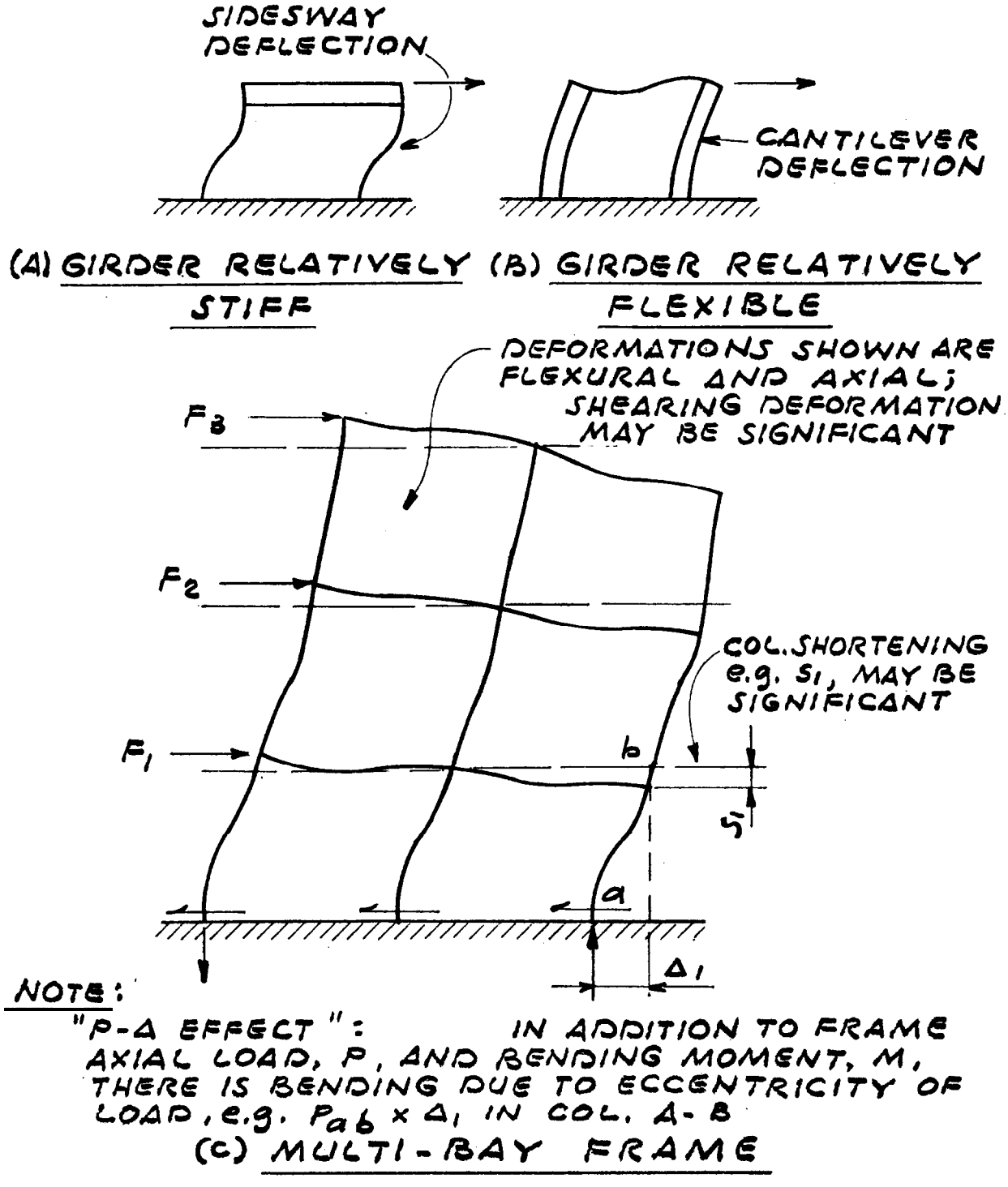

Figure 8-1. Frame deformations.

Structural system	R_w	H	Seismic Zone 3&4	Seismic Zone 1&2
SEAOC B. Building frame system				
3a. Concrete shear walls				
Concrete frames that are not part of the lateral force resisting system				
Frame Type C	8	240 ft	Yes	No
Frame Type D	8	-	No	Yes
SEAOC C. Moment resisting frame system*				
1b. Type A	12	-	Yes	Yes
2. Type B	7	-	No	Yes
3b. Type C	5	–	No	Not in 2
SEAOC D. Dual System*				
1a. Concrete shear walls with Type A moment frames	12	-	Yes	Yes
lb. Concrete shear walls with Type B moment frames	9	160 ft	Yes	Yes
3b. Concrete concentric braced frames with Type A frames	9	-	No	Yes
3c. Concrete concentric braced frames with Type B frames	6	-	No	Yes

*Concrete frames not part of the designated lateral force resisting system will be Type C in Zones 2,3, and 4, and maybe Type D in Zone 1.

Table 8-1. Concrete moment resisting frame systems.

b. The two phases of design. With the design concept that inelastic behavior and energy dissipation are to be restricted to flexural yielding in the confined concrete regions of the beam or girder elements, the design process consists of two phases. The first phase establishes the beam sizes and capacities needed to resist the specified factored gravity and seismic load combinations. Then, with the known girder strengths and some preliminary column sizes, the second phase proportions the shear resistance of the girders, columns, and joints and establishes the column flexural strengths such that all of these elements are able to resist the effects of a strain-hardened flexural yielding in the beams along with unfactored gravity loads. The related specific requirements and details are shown in figures 8-2 to 8-9, and the design procedure is given by example in appendix D.

8-5. Type B frames. This type is the SEAOC IMRF with some modifications. It has a moderate degree of energy dissipation capacity. Its use is limited to Zones 1 and 2. It may be used as the designated moment resisting frame in a building frame system $R_w = 7$. It may be used as the moment resisting frame of a dual system, as follows: with concrete concentric braced frames, with $R_w = 6$; with masonry shear walls, with $R_w = 7$; and with concrete shear walls, with $R_w = 9$. These R_w-values represent lesser ductility compared with the Type A frame. The design provisions are essentially those of ACI 21.9, with additional requirements given in the following paragraphs. The additional requirements are intended to provide for structural resistance to collapse due to the rare but credible earthquake effects in Zones 1 and 2.

a. Slab and column frames. Flat-plate or two-way slab systems are permitted for the beam elements of Type B frames. These slab systems have a potential for a brittle mode of punching shear failure at the column supports due to gravity load combined with the eccentric shear caused by moment transferred from the slab to the column. In order to prevent punching-shear failure under the maximum expected earthquake deformation, the slab will have the capacity to resist nonfactored gravity load effects together with the transfer moment effects due to $3R_w/8$ times the specified seismic forces. The value of the transfer moment M_u used for the fraction $\gamma_v M_u$ to be transferred by eccentricity of shear will therefore be due to the load combination of D + L +

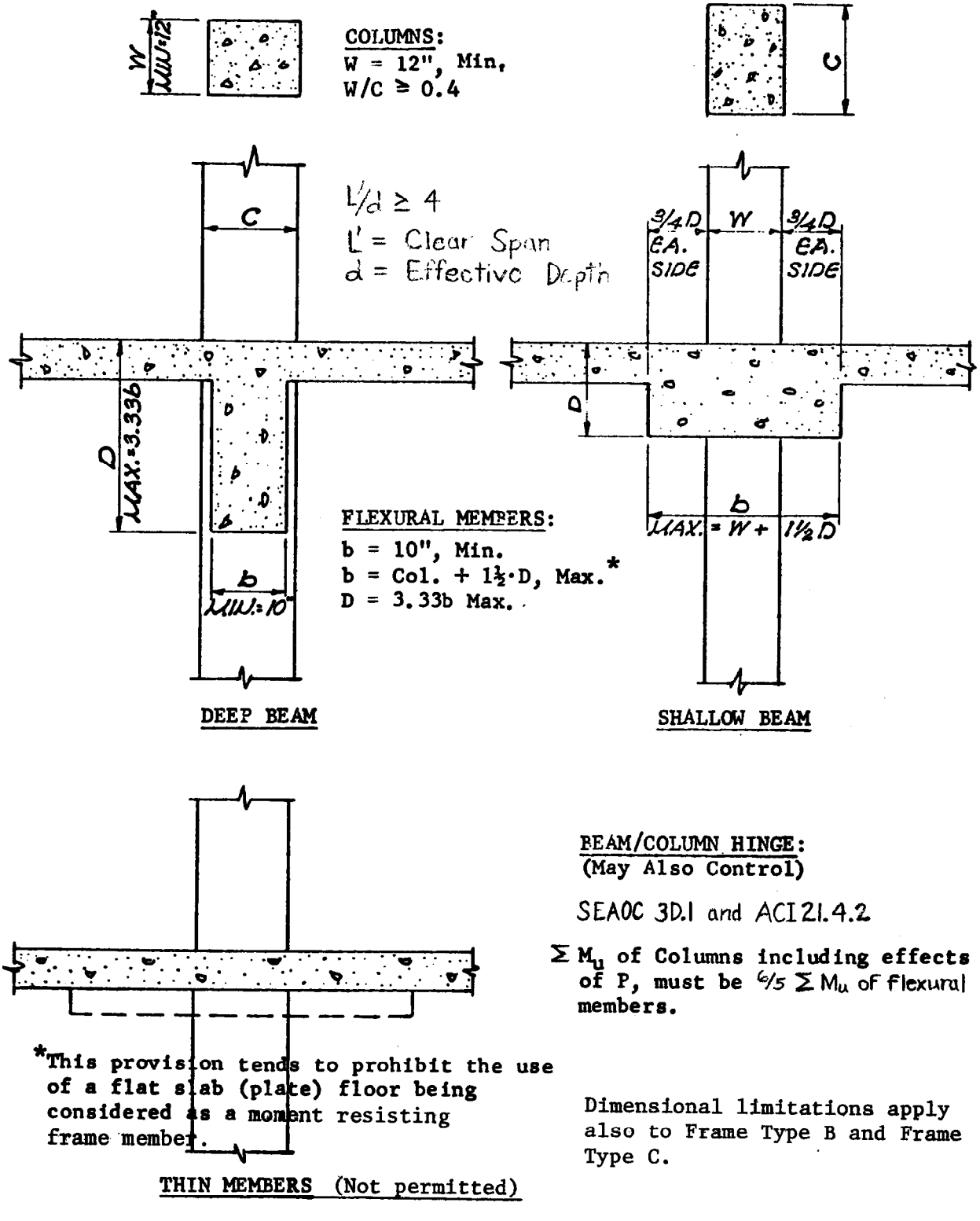

Figure 8-2. Type A frame-limitations on dimensions.

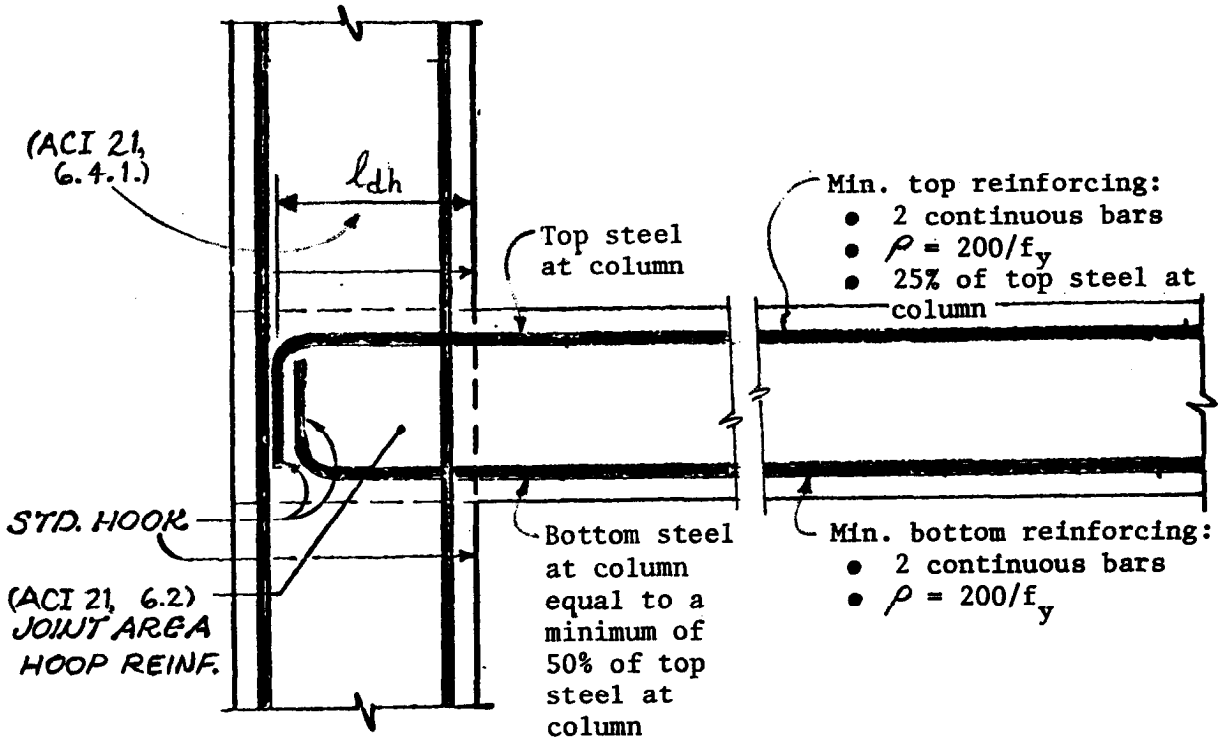

ELEVATION OF GIRDER AND COLUMN

FLEXURAL MEMBER:

f'_c = 3,000 p.s.i. min. at 28 days

f_y = 40 ksi or 60 ksi

Reinforcement ratio, $\rho = A_s/bd$ or $\rho' = A'_s/bd$: $\rho = 0.025$ max.

COLUMN:

f'_c = 3,000 p.s.i. at 28 days Min.

f_y = 40 ksi or 60 ksi

Reinforcement ratio, ρ (for tied columns)
≥ 0.01 and ≤ 0.06.

Figure 8-3. Type A frame- longitudinal reinforcement.

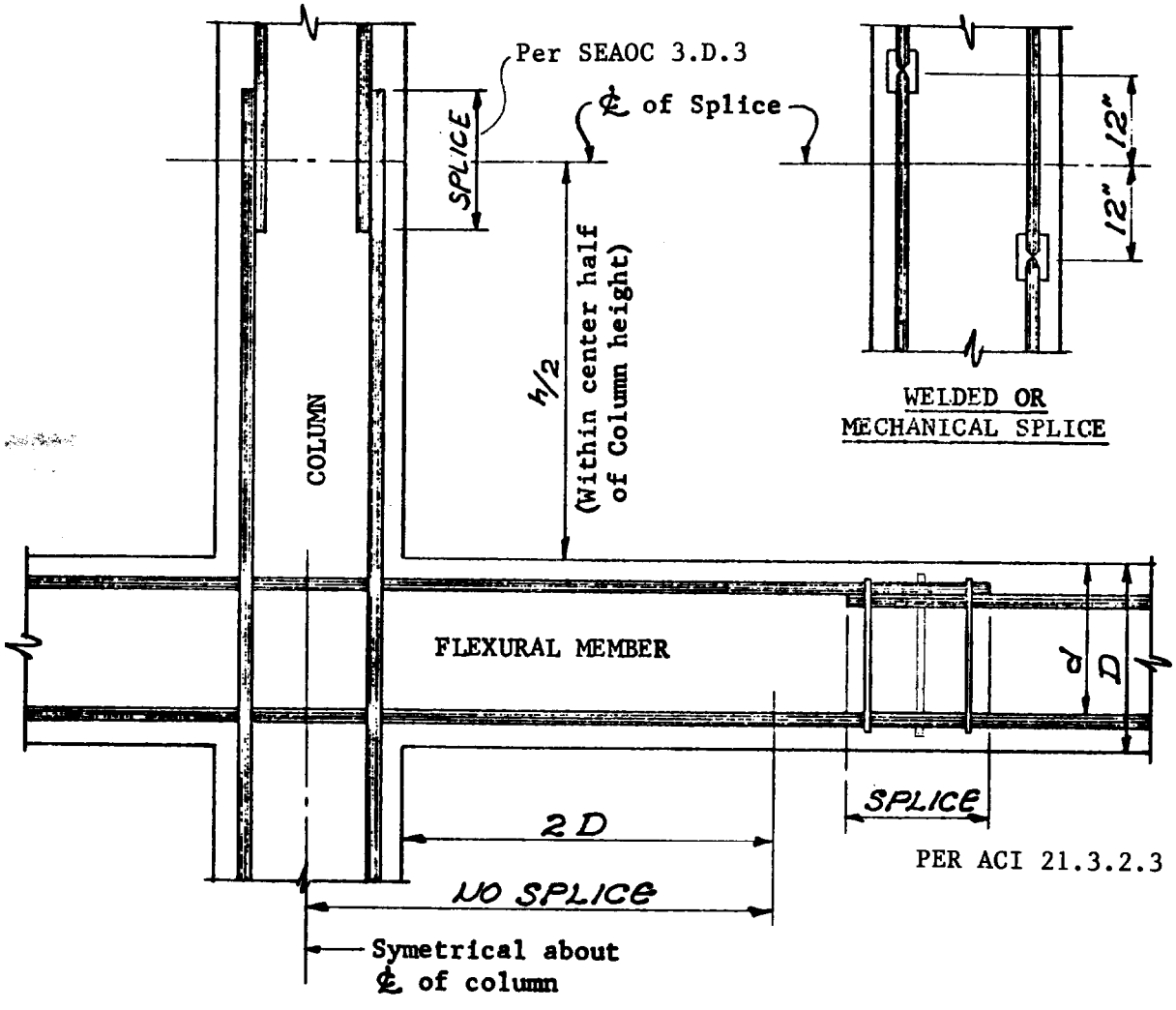

COLUMN:

i_d is the tension development length. See ACI 318-89, Sect. 12.2.

At any level, not more than alternate bars will be welded or mechanical spliced. Minimum distance between two adjacent bar splices = 24".

Figure 8-4. Type A frame-splices in reinforcement.

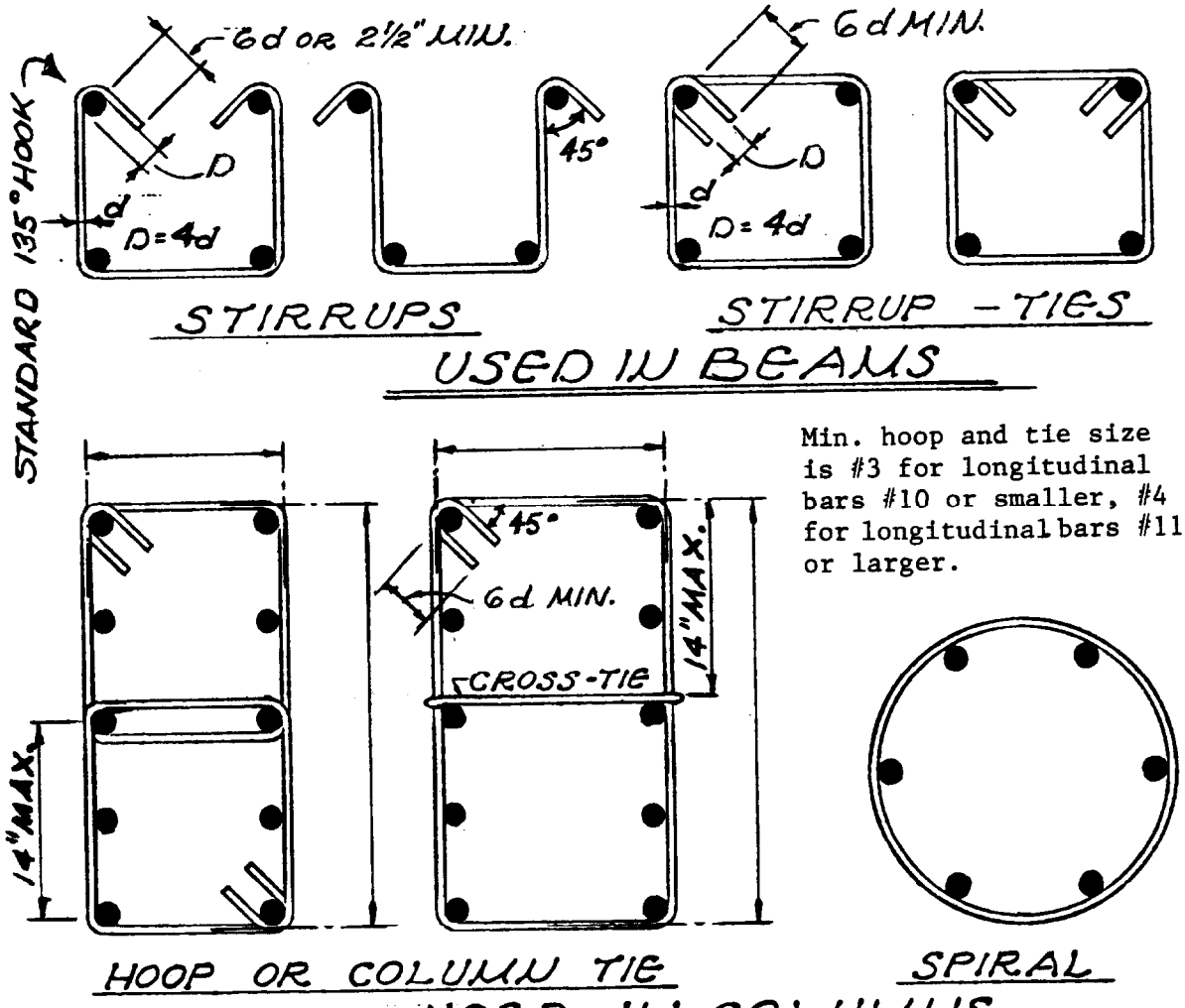

Min. hoop and tie size is #3 for longitudinal bars #10 or smaller, #4 for longitudinal bars #11 or larger.

SPIRAL RATIO:

$$\rho_s = 0.12\frac{f'_c}{f_{yh}} \text{ or } 0.45\left(\frac{A_g}{A_c}-1\right)\frac{f'_c}{f_{yh}}$$

whichever is greater.

HOOP REQUIREMENTS - TOTAL TIE AREA:

$$A_{sh} = 0.3\left(\frac{sh_c f'_c}{f_{yh}}\right)\left(\frac{A_g}{A_{ch}}-1\right)$$

Formula 21-3

Formula 21-4

$$A_{sh} = 0.09 sh_c \frac{f'_c}{f_{yh}}$$, whichever is greater.

Provide hoops or spirals in columns where special transverse reinforcement is required. (ACI 21, 4.4)

FUNCTIONS	Stirrups	Stirrup-Ties	Column Ties	Hoops	Spirals
Shear Reinforcement And "Caging"	●	●	●	●	●
Restrain Longitudinal Steel From Buckling		●	●	●	●
Confine Concrete				●	●

Figure 8-5. Type A frame-transverse reinforcemnt.

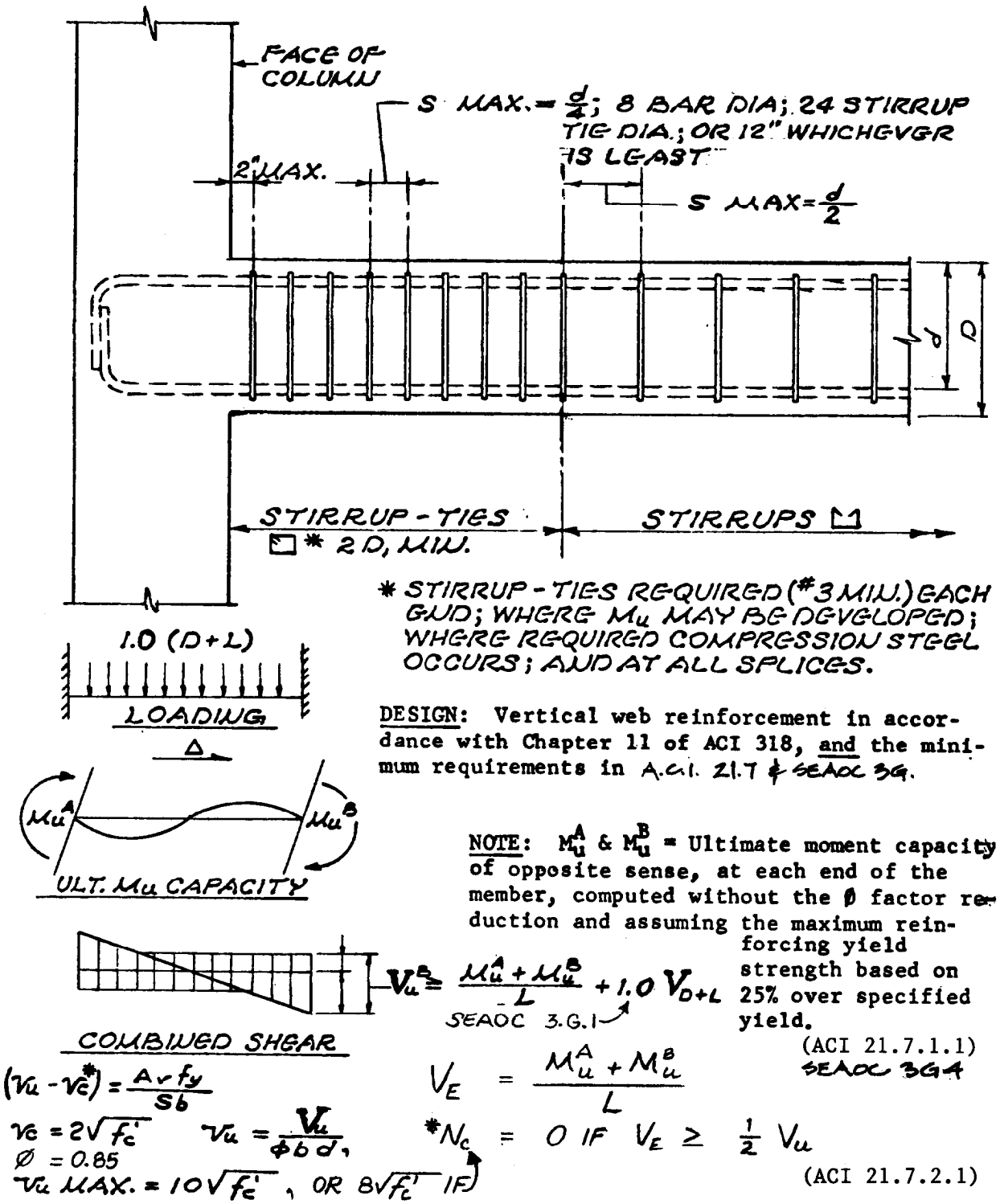

DESIGN: Vertical web reinforcement in accordance with Chapter 11 of ACI 318, and the minimum requirements in A.C.I. 21.7 & SEAOC 3G.

NOTE: M_u^A & M_u^B = Ultimate moment capacity of opposite sense, at each end of the member, computed without the ϕ factor reduction and assuming the maximum reinforcing yield strength based on 25% over specified yield.

(ACI 21.7.1.1)
SEAOC 3G4

Figure 8-6. Type A frame-girder web reinforcement.

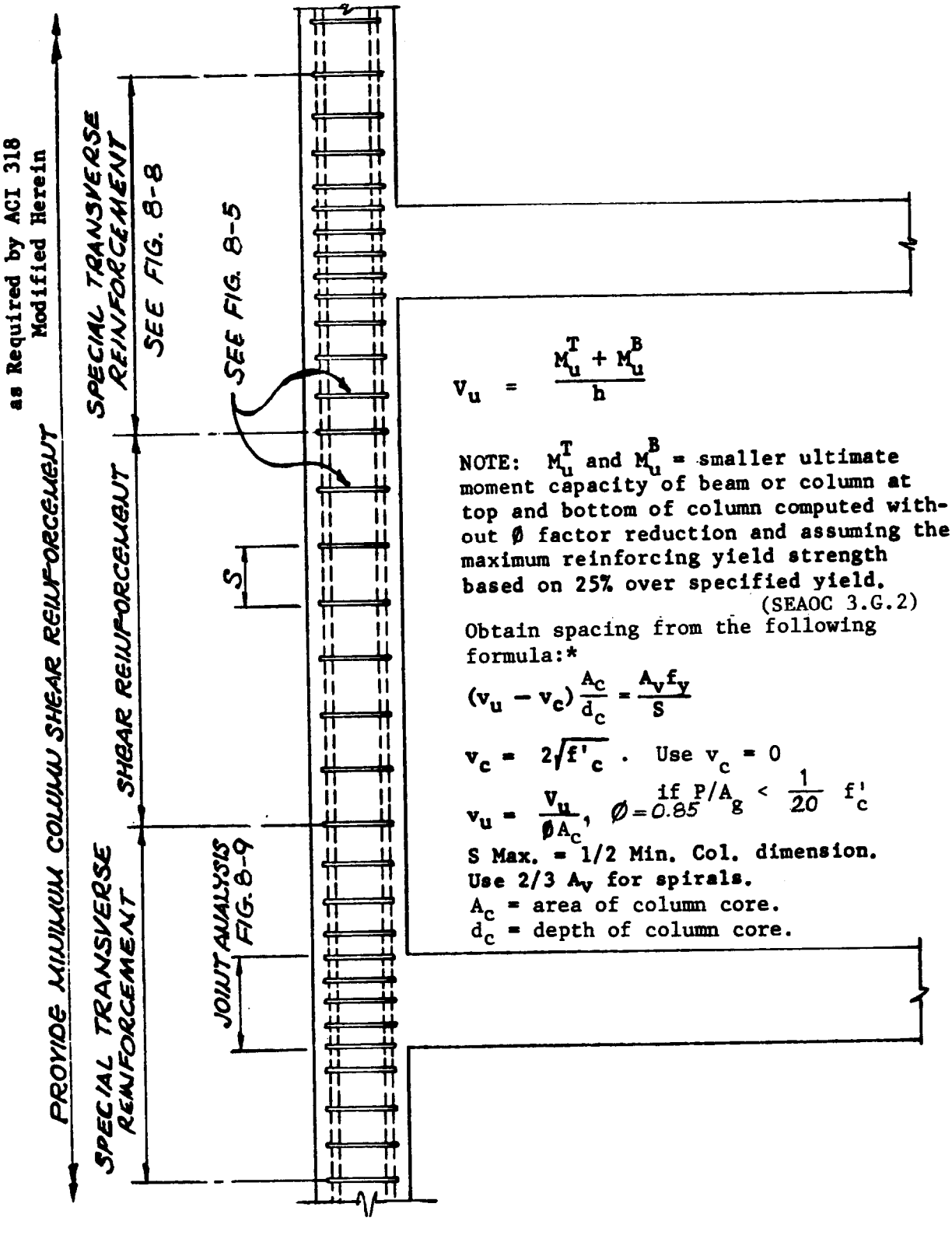

Figure 8-7. Type A frame-column transverse reinforcement.

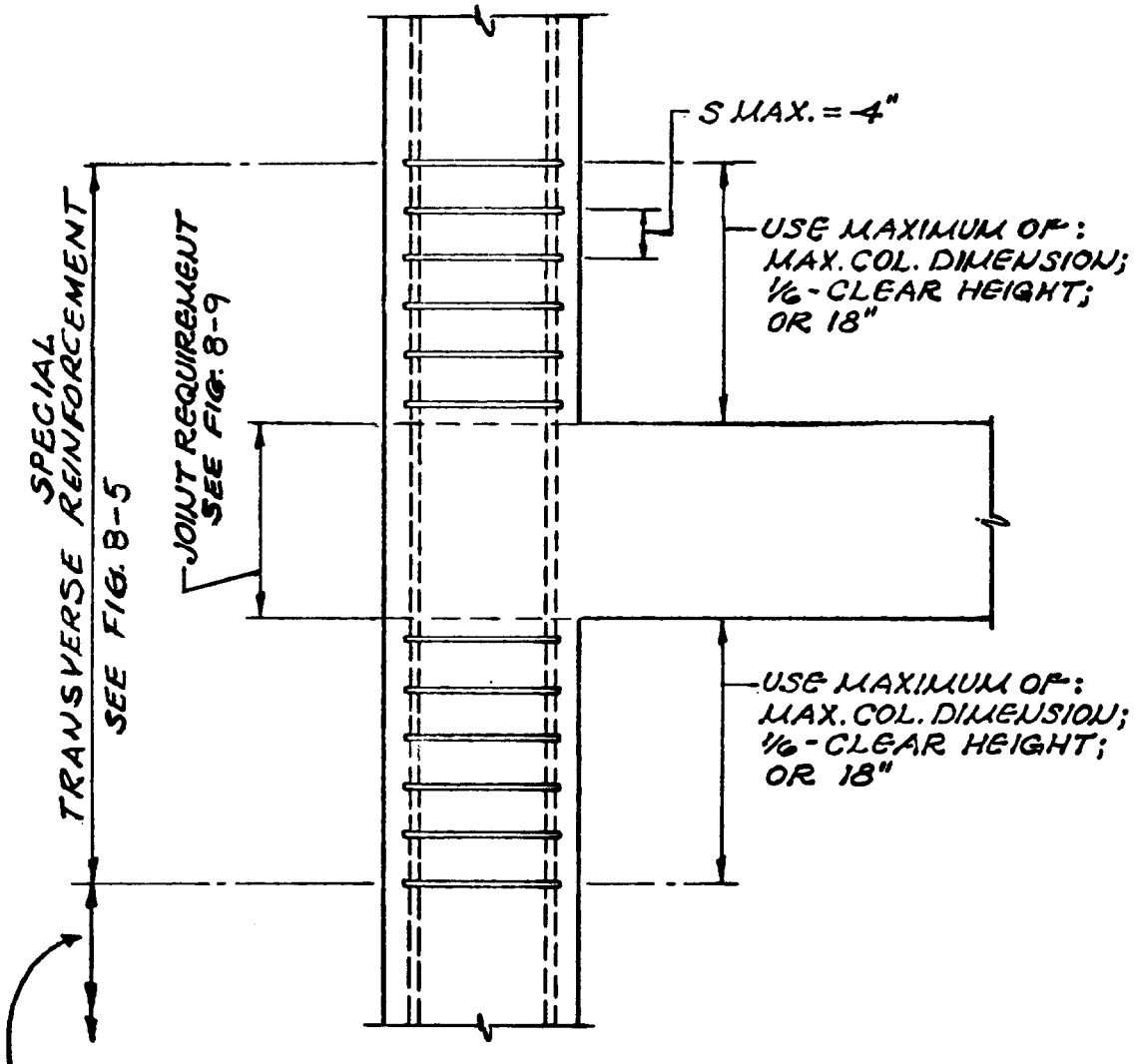

3D5.
AT ANY SECTION WHERE THE ULTIMATE CAPACITY OF THE COLUMN (P_u) IS LESS THAN THE SUM OF THE SHEARS (ΣV_u COMPUTED BY $V_u = \frac{M_u^A + M_u^B}{L} + 1.0 V_D + L$ FOR ALL THE BEAMS ABOVE THE LEVEL UNDER CONSIDERATION, CONFINING REINFORCEMENT SHALL BE PROVIDED. SEE FIG. 8-5. THIS CONFINING REINFORCEMENT IS ALSO REQUIRED BY: SEAOC 3D6 WHEN POINT OF CONTRAFLEXURE NOT IN MIDDLE HALF OF COLUMN (ACI 21.4.4.5 AND SEAOC 3D4) FOR COLUMNS SUPPORTING DISCONTINUED STIFF MEMBERS, SUCH AS WALLS.

NOTE: A.C.I. 21.7 & SEAOC 3G SUBSTITUTE SYMBOL V_e for V_u

Figure 8-8. Type A frame-special transverse reinforcement.

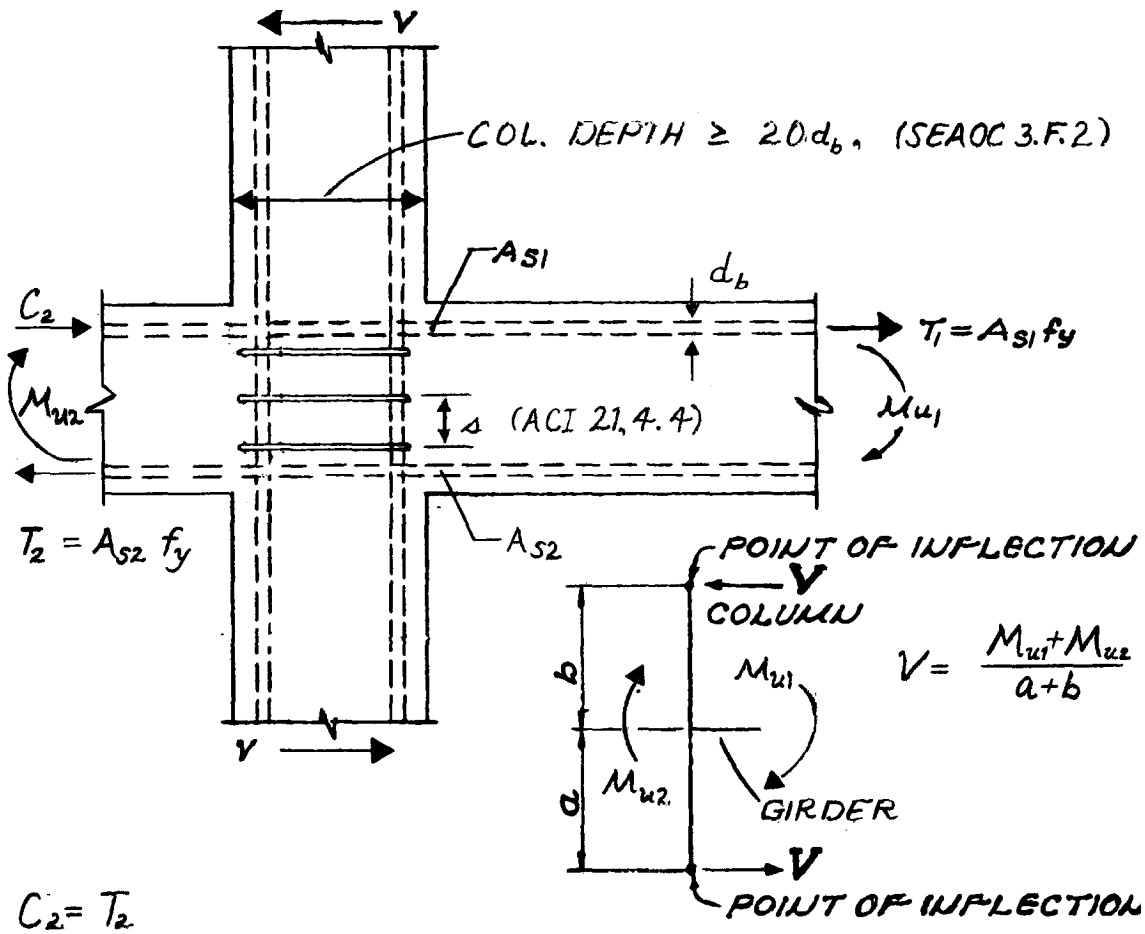

$C_2 = T_2$

$V_u = T_1 + C_2 - V$

$v_u = \frac{V_u}{A_j}$, WHERE A_j IS DEFINED IN (SEAOC 3.F.1)

S = 4" MAX. FOR NON-CONFINED JOINTS (ACI 21, 6.2.1)

Only 1/2 the special transverse reinforcement is required for confined joints where girders frame into all four sides. (ACI 27.6.2.2)

NOTE: The intersection of the orthogonal beam steel and the column steel, along with the required joint confinement hoop steel frequently results in congestion of bars. A careful study of the bar layouts should be made during design and represented on the construction documents.

Figure 8-9. Type A frame-girder-column joint analysis.

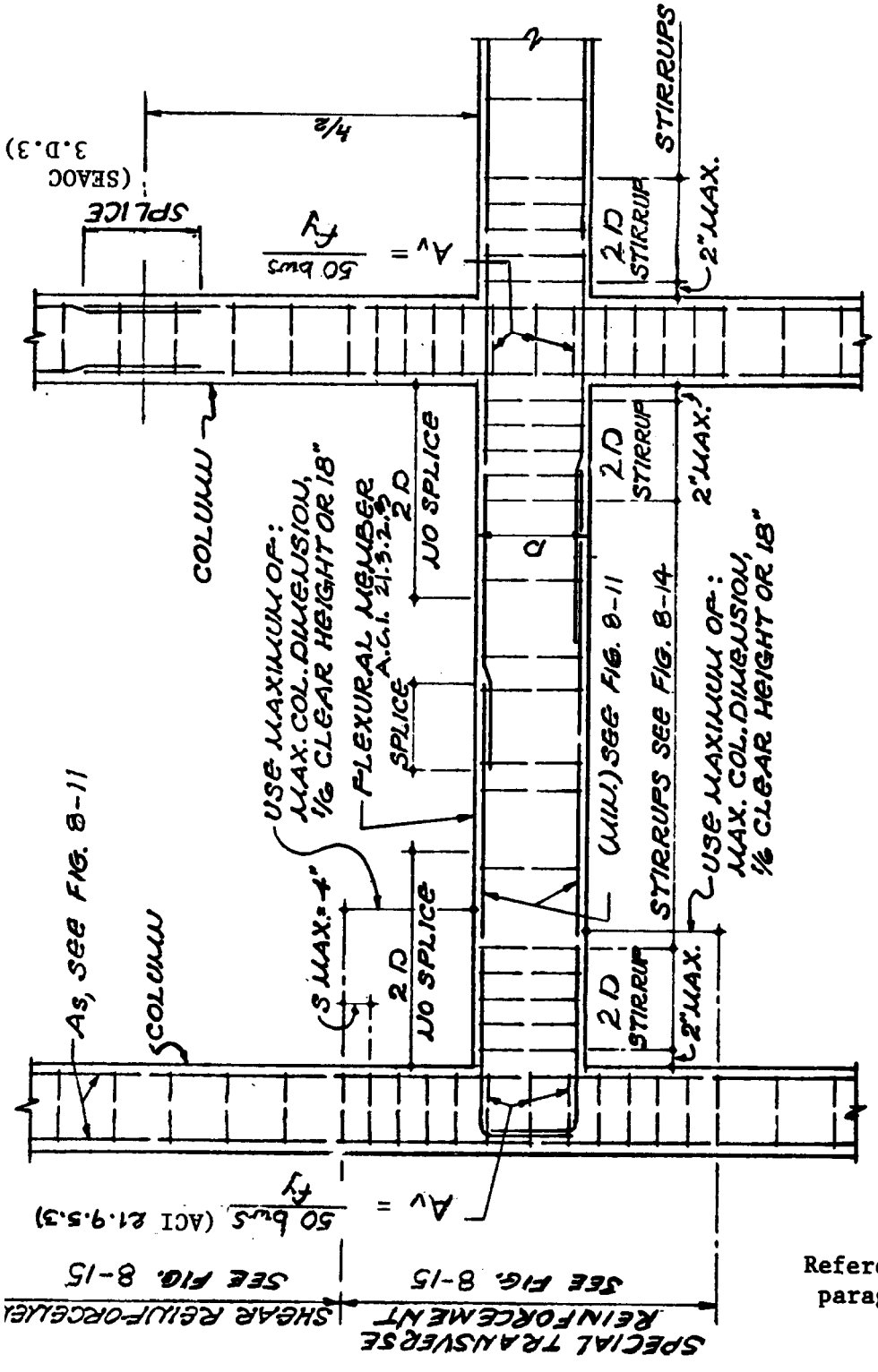

Reference:
paragraph 7-4

Figure 8-10. Type B frame—frame requirements.

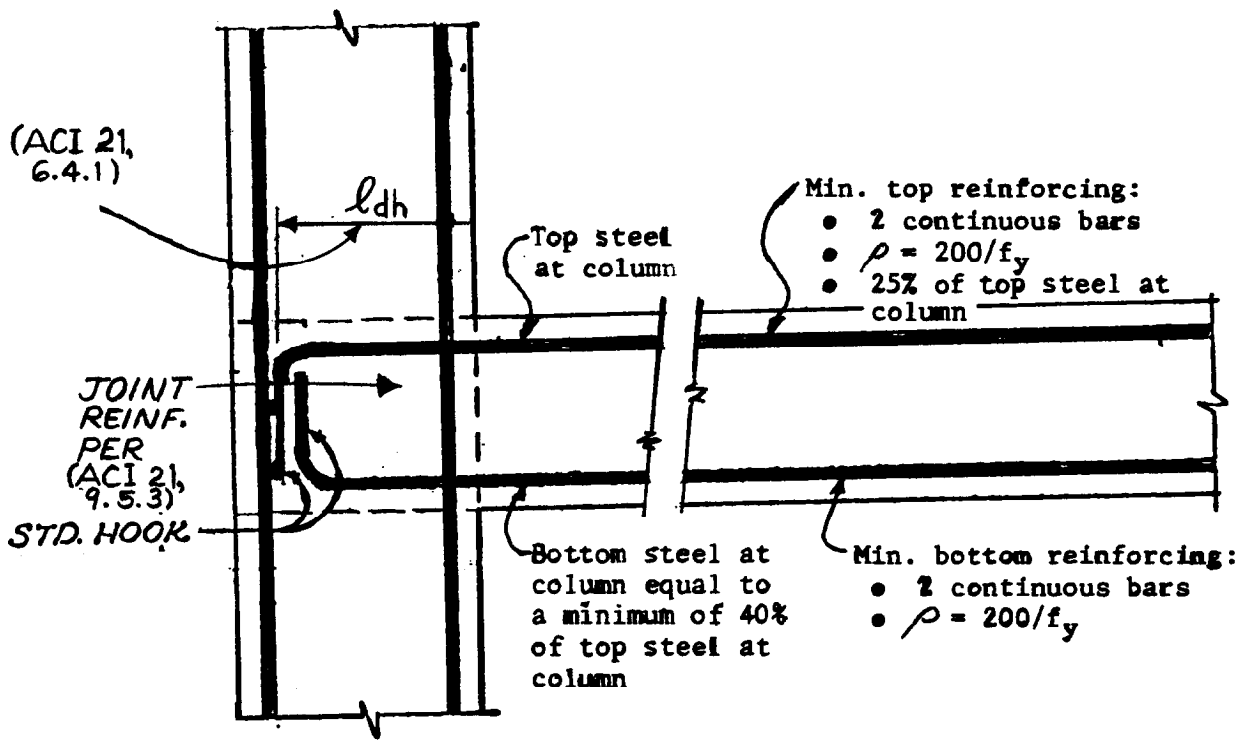

ELEVATION OF GIRDER AND COLUMN

FLEXURAL MEMBER:

f'_c = 3,000 p.s.i. min. at 28 days

f_y = 40 ksi or 60 ksi

Reinforcement ratio $\rho = A_s/bd$ or $\rho' = A'_s/bd$: $\rho = 0.025$ max.

COLUMN:

f'_c = 3,000 p.s.i. at 28 days

f_y = 40 ksi or 60 ksi

Reinforcement ratio ρ (for tied columns) > 0.01 and < 0.06.

Figure 8-11. Type B frame-longitudinal reinforcement.

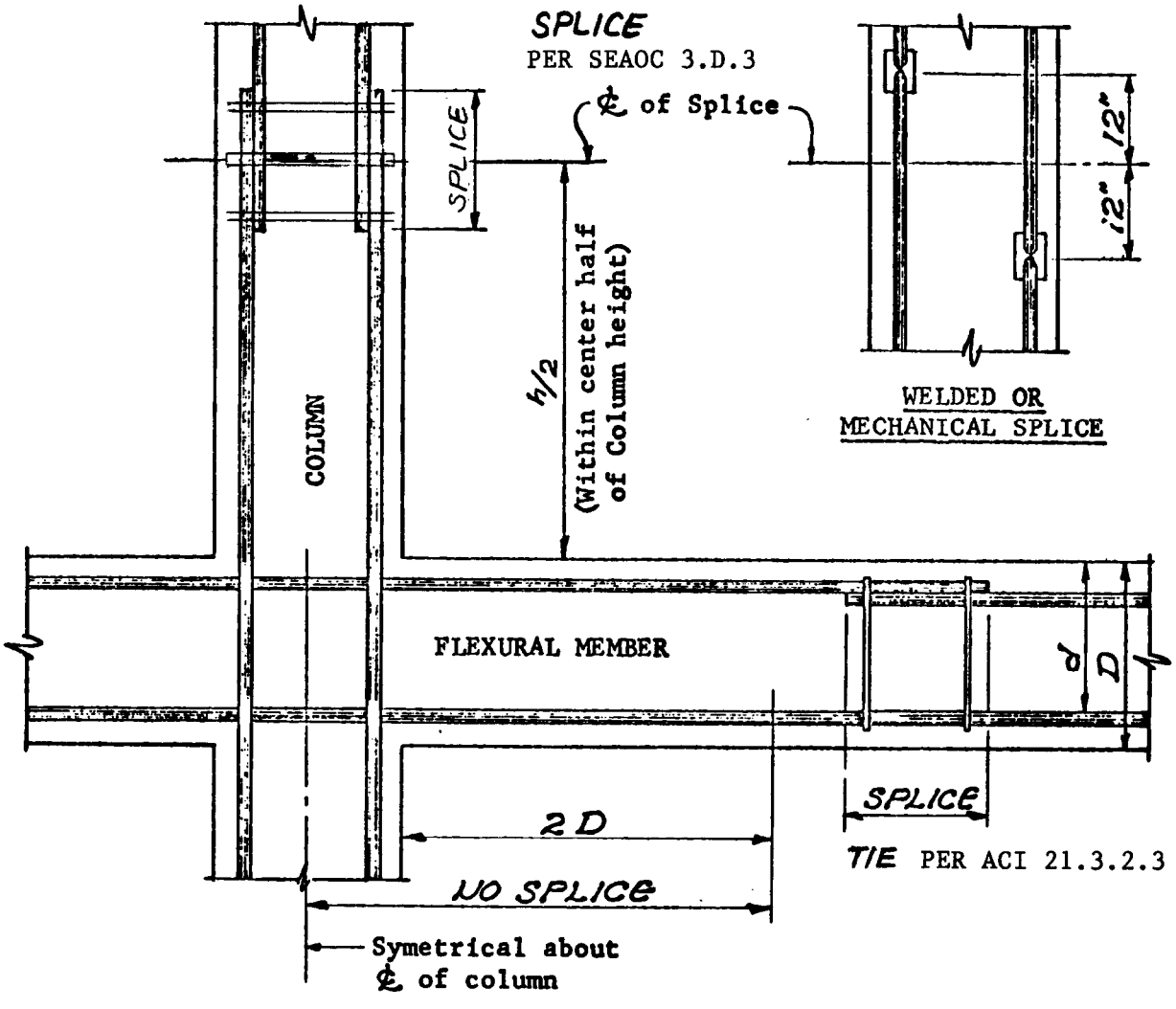

COLUMN :

l_d is the tension development length. See ACI 12.2.

At any level, not more than alternate bars will be welded or mechanical spliced. Min. distance between two adjacent bar splices = 24".

Figure 8-12. Type B frame-splices in reinforcement.

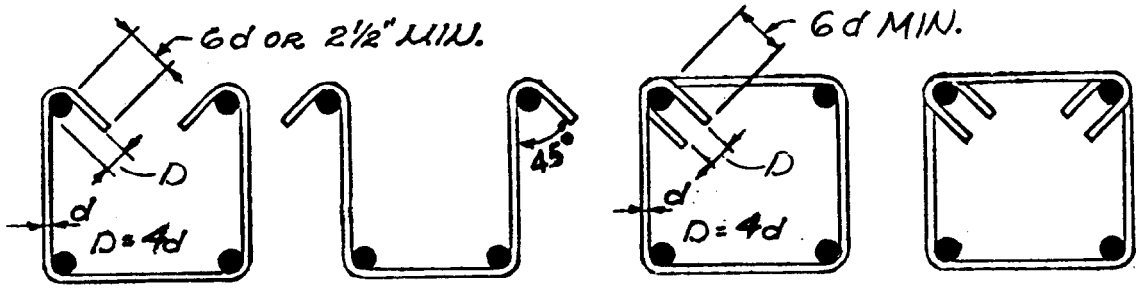

STIRRUPS STIRRUP -TIES

USED IN BEAMS

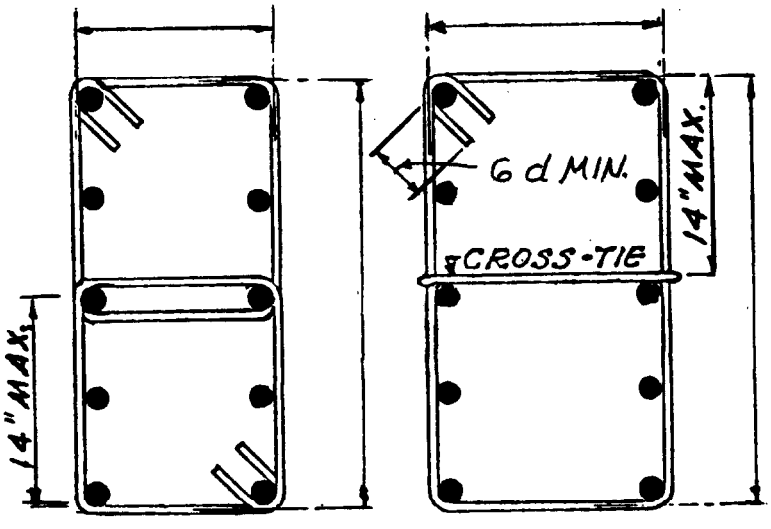

Min. hoop and tie size is #3 for longitudinal bars #10 and smaller, and #4 for longitudinal bars #11 or larger.

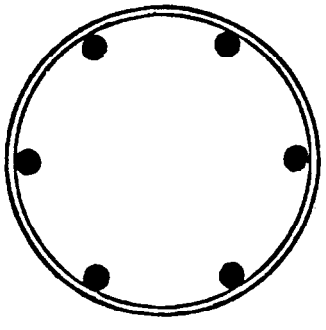

HOOP OR COLUMN TIE SPIRAL

USED IN COLUMNS

SPIRAL RATIO:

$$\rho_s = 0.08 \frac{f_c'}{f_{yh}} \text{ or } 0.45\left(\frac{A_g}{A_c}-1\right)\frac{f_c'}{f_{yh}}$$

HOOP REQUIREMENTS - TOTAL TIE AREA:

$$A_{sh} = 0.08\ s h_c \frac{f_c'}{f_{yh}}$$

FUNCTIONS	Stirrups	Stirrup-Ties	Column Ties	Hoops	Spirals
Shear Reinforcement And "Caging"	●	●	●	●	●
Restrain Longitudinal Steel From Buckling		●	●	●	●
Confine Concrete				●	●

Figure 8-13. Type B frame-transverse reinforcement.

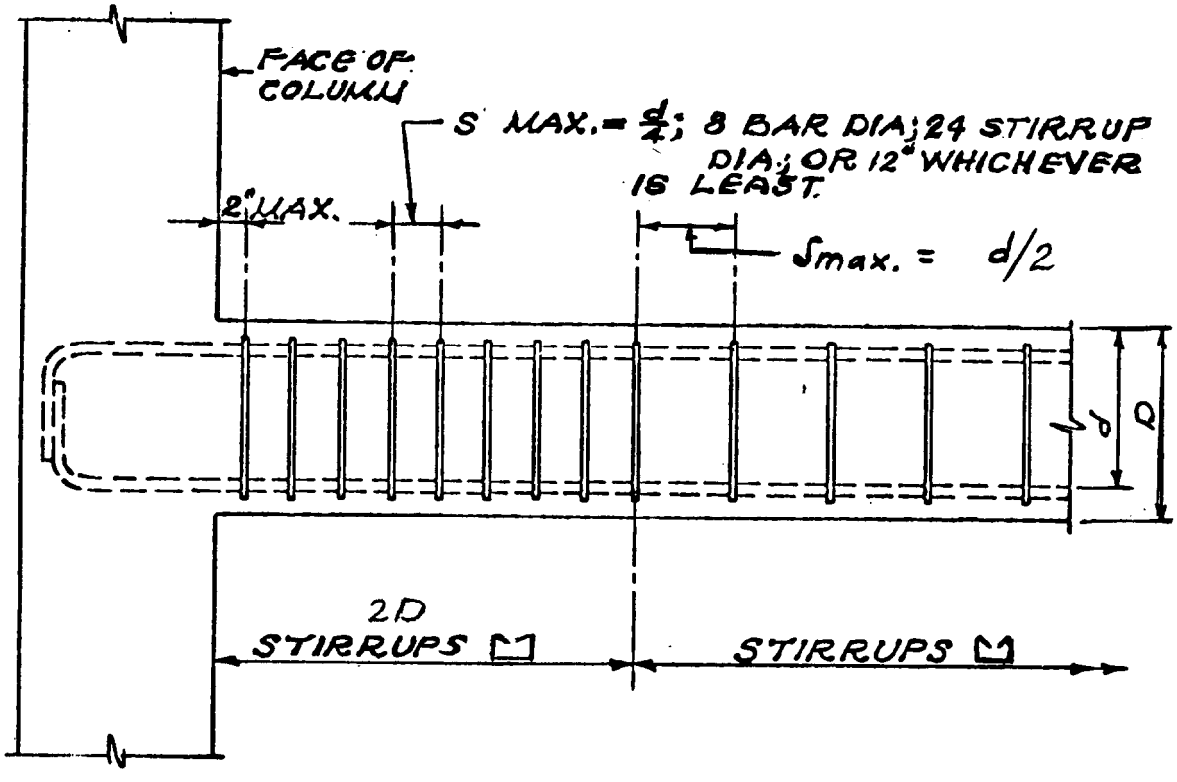

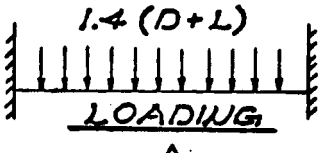

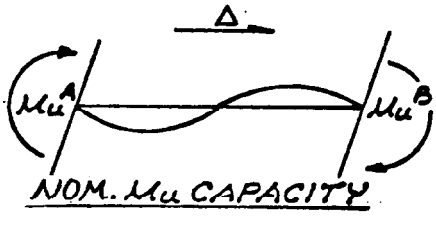

DESIGN: Vertical web reinforcement in accordance with Chapter 11 of ACI 318, and the minimum requirements in ACI 21.7 and SEAOC 3G

NOTE: M_u^A & M_u^B = Nominal moment capacity of opposite sense, at each end of the member.

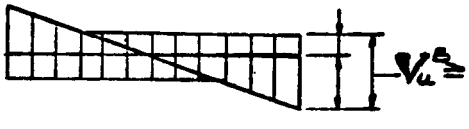

$$V_u^B = V_E + 1.4\,V_{D+L}$$

$$V_E = \frac{M_u^A + M_u^B}{L} \leq ZE$$

E = SHEAR EFFECT DUE TO PRESCRIBED SEISMIC FORCES

COMBINED SHEAR

$$v_u - v_c = \frac{A_v\, f_y}{s\, b}$$

$$v_c = 2\sqrt{f'_c} \qquad v_u = \frac{V_u}{\phi b d}$$

$\phi = 0.85$

v_u MAX. = $10\sqrt{f'_c}$

Figure 814. Type B frame-girder web reinforcement.

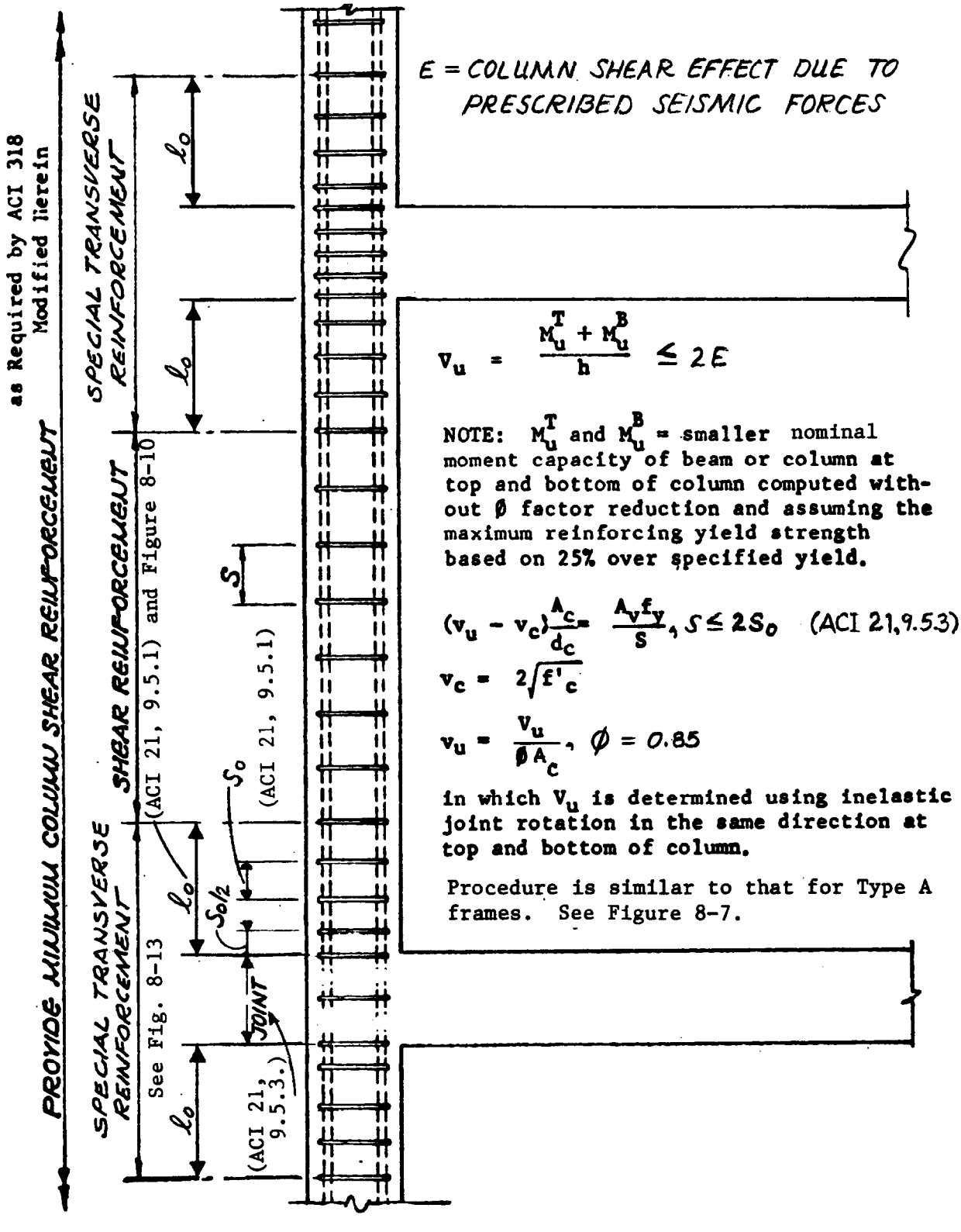

Figure 8-14. Type B frame-girder web reinforcement.

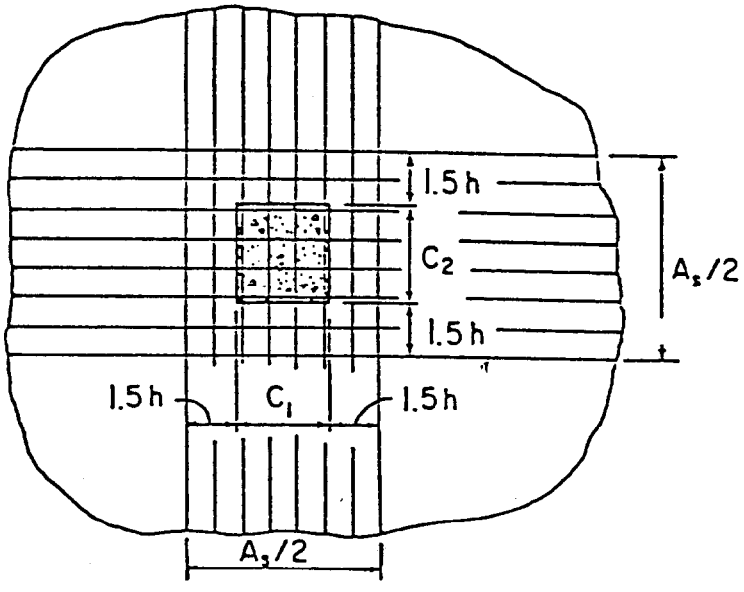

BANDED COLUMN STRIP REINFORCEMENT

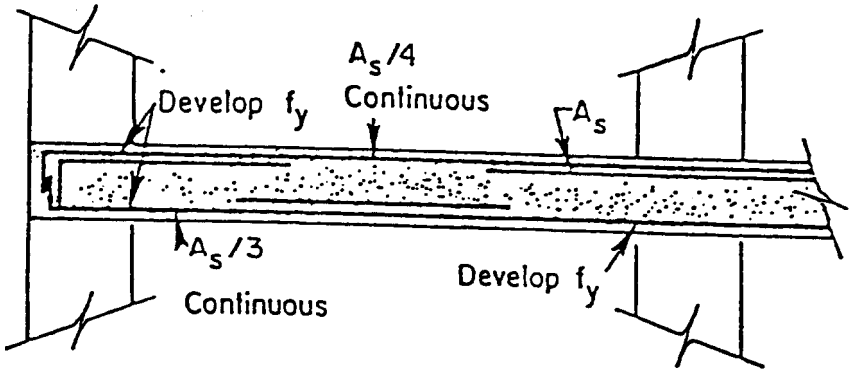

SLAB COLUMN STRIP

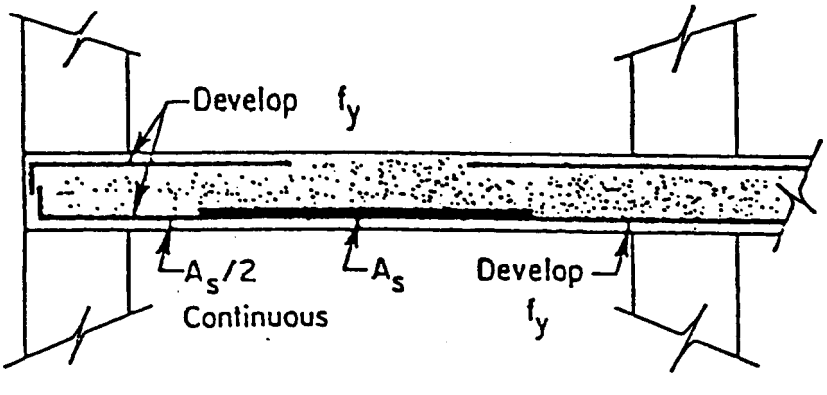

SLAB MIDDLE STRIP

Figure 6-16. Type B frame-slab/column framing system.

$(3R_w/8)E$. The punching-shear resistance shall be evaluated by using an understrength factor of $\phi = 0.6$ applied to the shear resistance equations in ACI Section 11.11.

b. Development length. The development length for reinforcement in tension shall conform to ACI 21.6.4.

c. *Joint reinforcement.* Tie spacing within the joint shall not exceed the spacing SO given by ACI 21.9.5.1.

d. Details. Details for Type B frames are given in figures 8-10 through 8-16.

8-6. Type C frames. This type is the SEAOC OMRF with additional seismic details intended to ensure structural integrity and collapse resistance in the event of the rare but credible earthquake in Zone 1.

a. Seismic frames. In Zone 1 the Type C frame may be used to resist lateral forces as a moment frame with $R_w = 5$. The design provisions are given in paragraph *c* below.

b. Nonseismic frames. In some cases, as indicated in table 8-1, frames that are intended to carry gravity loads only and are not part of the lateral force resisting system may be required to be Type C frames. The design provisions for these nonseismic frames are given in paragraph 8-8.

c. *Design provisions for Type C seismic frames.* In addition to the general requirements of ACI 318 Chapters 1-12, the Type C frame shall meet the following additional requirements

(1) *Dimensional limits.* See figure 8-2.

(2) *Slab and column frames.* The same requirements as given in paragraph 8-5a.

(3) *Stirrups.* Web reinforcement is required throughout the length of flexural members. The reinforcement will be designed in accordance with ACI 318, except that the area of reinforcement will not be less than 0.0015 times the product of the width of the web and the spacing of the web reinforcement along the longitudinal axis of the member. The first stirrup will be located at two inches from the column face, and the next six stirrups will be placed at a spacing not greater than d/4.

(4) *Bottom bars.* Positive moment reinforce. ment at the supports of flexural members subject to reversal of moments will be anchored by bond, hooks, or mechanical anchors in or through the supporting member to develop the yield strength of the bars. The positive moment capacity of flexural members at columns will be at least 30 percent of the negative capacity.

(5) *Splices.* Lapped splices in flexural members, located in a region of tension or reversing stress, will be confined by at least two stirrups at each splice.

(6) *Column ties. The* spacing of ties at the ends of tied columns will not exceed 4 inches for a distance equal to the maximum column dimension but not less than one-sixth the clear height of the column from the face of the joint. The first such tie will be located 2 inches from the face of the joint.

(7) *Beam-column joints.* Joints of exterior and corner columns will be confined by lateral rein forcement through the joint. Such lateral reinforcement will consist of spirals or ties as required at the ends of columns. Tie spacing within the joint will not exceed the spacing given by Section 21.8.2.2 of ACI 318-89.

(8) *Development length.* The development length for reinforcement in tension shall conform to Section 21.6.4. of ACI 318-89.

8-7. Type D frames. This type is not designed for earthquake loads; however, it has some reserve strength that offers some resistance to seismic loads. The use of Type D frames is discussed below.

8-8. Nonseismic frames. A frame that is intended to carry gravity loads only, and is not considered part of the lateral force resisting systern, is subject to the requirement of SEAOC lH2d, as discussed in chapter 4. This requires the frame to be investigated and shown to be adequate for carrying vertical load when subjected to a displacement equal to $3R_w/8$ times the displacement of the lateral force resisting system of the building. The frame is considered adequate if, when the frame is so displaced, the factored moments, shears, and axial forces in the members do not exceed the nominal strengths of the members. As indicated in table 8-1, nonseismic frames are required to be Type C in Zones 2, 3, and 4 but may be Type D in Zone 1.

CHAPTER 9

STEEL MOMENT RESISTING FRAMES

9-1. Introduction. This chapter prescribes the criteria for the design of steel moment resisting frames in seismic areas.

9-2. General.

a. Functions. Steel moment resisting frames have functions and behavior similar to those of concrete moment frames. Refer to the general discussion of moment frames in chapter 8.

b. Frame types. There are two types of steel moment frame: the special moment resisting frame (steel SMRF) and the ordinary moment resisting frame (steel OMRF). Refer to SEAOC 4F6 for the use of trusses in moment resisting frames.

9-3. Steel special moment resisting frames (steel SMRF).

a. General design criteria. The criteria used to design steel special moment resisting frames will be the latest edition of the AISC *Specification* as modified by SEAOC 4A through 4D, 4F, and 4J. SEAOC 4A provides the basic reference to the eighth edition of the AISC *Specification,* SEAOC 4B provides the definitions applicable to steel construction, SEAOC 4C provides the requirements for steel materials and defines member strength used in the provisions that require development of member strength; SEAOC 4D provides for the strength of columns, the details of column splices, and the evaluation of slenderness effects; and SEAOC 4F provides the detailed requirements for steel SMRFs.

b. Limitations by seismic zone. As provided in SEAOC 4A2, structures in Zone 1 need not conform to the requirements of SEAOC Chapter 4. SEAOC 4F provides that structures in Zone 2 need conform only to Paragraphs 1, 6, 7, and 9 of the detailed requirements of SEAOC 4F.

c. *Basic requirements.* The basic requirements for steel SMRFs relate to the relationship between beams and columns and the connections between beams and columns.

(1) *Strength ratio.* SEAOC 4F5 provides for a strength ratio between columns and beams intended to ensure that plastic hinges will form in the beams rather than the columns. Exceptions to this requirement are allowed when compactness limitations are satisfied and load demands are relatively low. The SEAOC commentary includes a discussion of the strong column/weak beam concept.

(2) *Girder-to-column connection.* There are two fundamental requirements:

(a) SEAOC 4A1 provides a requirement for the strength of the girder-column connections. In order to meet this requirement, the girders will be connected to columns by rigid joints that are capable of developing the lesser value of the flexural strength of the girder framing into the joint, or the moment corresponding to the development of panel zone shear strength as defined in SEAOC 4F2. For typical details refer to figure 9-1.

(b) SEAOC paragraph 4F2 deals with the shear strength required in the joints of frames. In order to meet these requirements, the thickness of the column web in the panel zone may have to be increased, either by choosing a column with a thicker web or by adding doubler plates. The panel zone and doubler plate dimensional requirements are summarized in figure 9–2.

d. Details. Several paragraphs in SEAOC 4F relate to details of the frames.

(1) *Flange width-thickness ratio.* SEAOC 4F3 refers to AISC 1.5.1.4.1 regarding allowable stresses in bending and modifies the limiting girder flange width-thickness ratio to $65/\sqrt{F_y}$.

(2) *Continuity plates.* SEAOC 4F4 refers to AISC formula 1.15-3 when determining the need for tension flange continuity plates and adds a requirement for the quantity P_{bf}.

(3) *Changes in beam flange area.* SEAOC 4F9 prohibits abrupt changes in girder flange area within possible plastic hinge regions.

e. Stability of frames. SEAOC 4F7 provides requirements for the stability of girder-column joints, with provisions for restrained (laterally supported) joints and unrestrained (laterally unsupported) joints; SEAOC 4F8 provides requirements for bracing of girders between joints.

f. Drift of frames. SEAOC 4F10 provides requirements for the calculation of frame drift.

g. Trusses in frames. The special moment frame provisions, originally developed for frames consisting of wide-flange beams, have been extended to include frames whose beams are trusses. The requirements for these frames are given in SEAOC 4F6.

h. Inspection. As with other structural systems, the system R^w-values for steel $SMRF_s$ are assigned with associated requirements that the detail requirements be met and that appropriate inspection be provided. Refer to SEAOC 4J for the requirement for nondestructive testing of joints in steel $SMRF_s$.

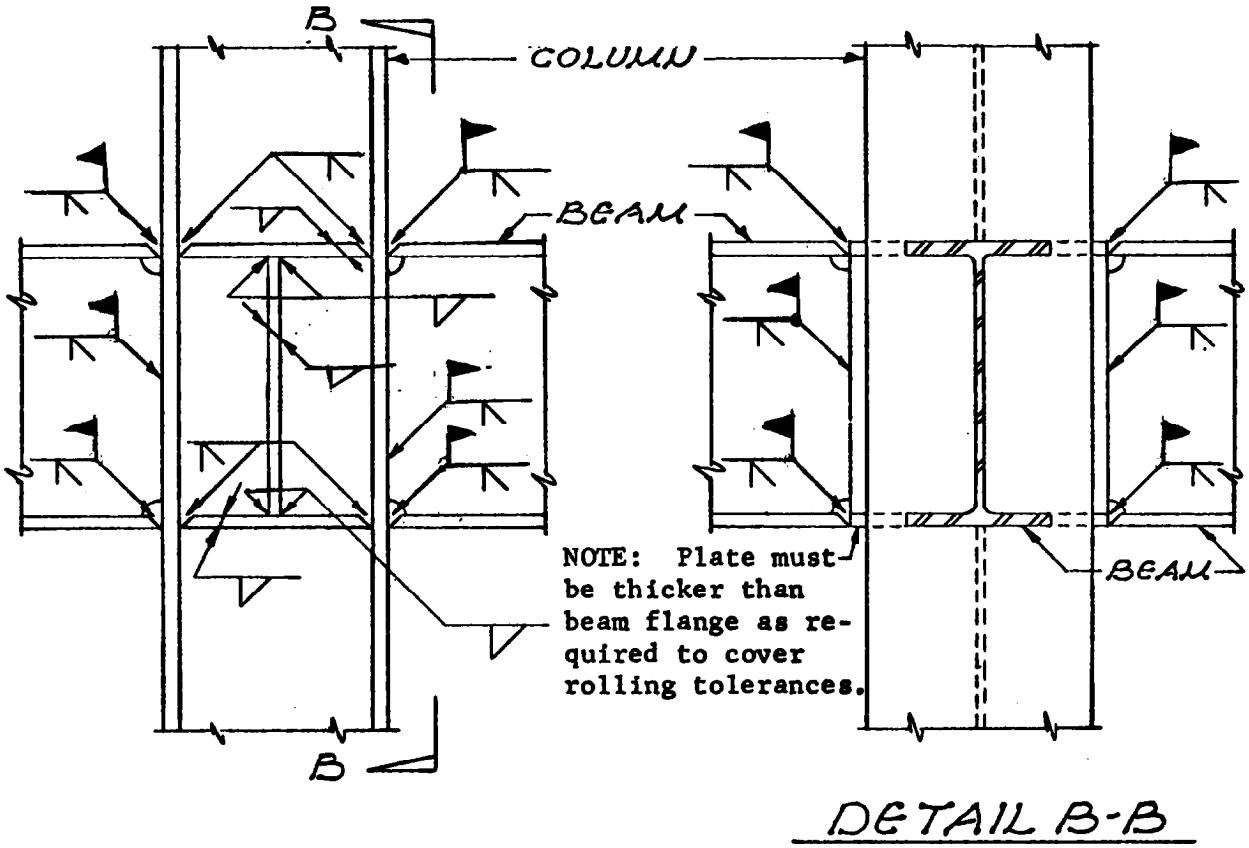

NOTES:
WELDS UNLESS SHOWN AS FILLET WELDS ARE FULL PENETRATION BUTT WELDS. USE BACKING STRIPS OR CHIP AND USE BACKING WELDS.
THE PURPOSE OF THIS BEAM AND GIRDER CONNECTION TO THE COLUMN IS TO DEVELOP THE FULL PLASTIC CAPACITY OF BEAM AND GIRDER.
OTHER CONNECTION DETAILS WHICH ARE CAPABLE OF DEVELOPING THE PLASTIC CAPACITY OF THE CONNECTED BEAMS AND GIRDERS MAY BE USED.

Figure 9–1. Steel SMRF.

9-4. Steel ordinary moment resisting frames (steel OMRF).

a. General design criteria. The criteria used in the design of steel moment resisting frames will be the latest edition of the AISC Specifications, modified by SEAOC 4E.

b. Limitations as seismic moment resisting frames.

(1) Frames without special seismic details or loading. In Zone 1, ordinary moment frames may be designed with $R_w = 6$.

(2) Frames without special seismic details but with special loading. OMRFs without special details may be used if they are capable of resisting the combination of gravity loads and $3(R_w/8)$ times the design seismic force. In Zone 1, an R_w value of 12 may be used; in Zones 2, 3, and 4, $R_w = 6$. In Zones 3 and 4, there is a height limit of 160 feet.

(3) Frames with girder-to-column connections that meet the requirements of SEAOC 4F1. $R_w = 6$, and in Zones 3 and 4 there is a height limit of 160 feet.

c. Girder-to-column connections. Each beam or girder moment connection to a column will meet the requirements of SEAOC 4F1 for $SMRF_s$ unless it can be shown that it is capable of resisting the combination of gravity loads and $3R_w/8$ times the design seismic forces.

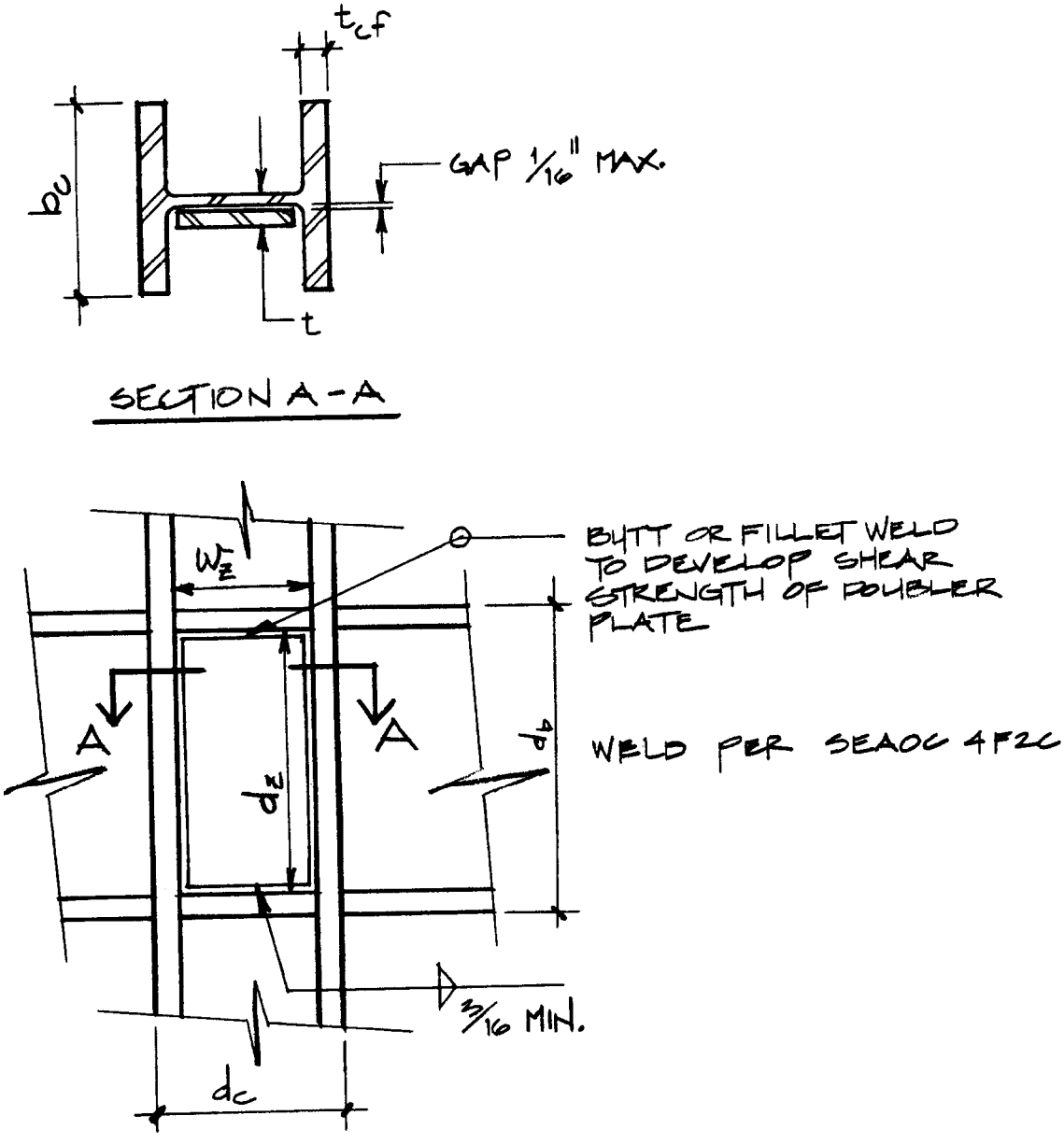

Figure 9-2. Panel zone details.

CHAPTER 10

FOUNDATIONS

10-1. Introduction. This chapter discusses the design of foundations to resist earthquake lateral forces. Reference is made to SEAOC 1J.

10-2. General.

a. Base. The base of the building is the level at which the earthquake motions are considered to be imparted to the structure. From the point of view of design, the base is the level at which the base shear is resisted. In a building without a basement, this is simply at grade, where footings develop lateral resistance. In a building with a basement, the base is at grade if grade-level framing or the upper portion of the basement wall is capable of developing the required lateral resistance, or at the basement level if the lateral resistance cannot be developed at grade level. On sloping sites, the level at grade may be unrestrained at the downhill side but restrained, like a basement, at the uphill side. The base of a building is determined by judgment, considering the mechanism for developing lateral resistance. The base should be taken at the highest level where the building can transmit lateral forces into the ground on all sides. Partial basements and sites with varying subsurface conditions are also potentially troublesome. The engineer should consider how the forces enter the substructure and how they are transmitted into the ground. Simple three-dimensional free-body diagrams of whole substructures may be of great help in defining the design conditions.

b. Column bases. If a column is assumed to be freed in the analysis of the superstructure, the foundation system must have the strength and stiffness required by this assumption.

c. Development of forces into the foundations. Foundations must be detailed to develop the horizontal and vertical components of seismic forces imparted by columns, shear walls, and braces. In instances where footings are subjected to lateral thrusts due to applied vertical loads, such horizontal thrust will be added to the lateral seismic force indicated above. An example of this case could be the outward thrusts on footings of a rigid gable bent due to applied vertical loads.

d. Interconnection of foundation elements. Unless the soil is quite stiff, foundation elements should be interconnected to allow a redistribution of lateral forces. Individual pile, caisson, and deep pier footings of every building or structure in Zones 2, 3, and 4 will be interconnected by foundation ties or a structural slab. For Zone 1, provide ties only when surrounding soil has low passive resistance values. Isolated spread footings on soil with a low passive resistance will also be tied together in a way to prevent relative movement of the various parts of the foundation with respect to each other. The ties can be formed by an interconnecting grid network of reinforced concrete struts or structural steel shapes encased in concrete. As an alternative, a reinforced concrete floor slab, doweled to walls and footings to provide restraint in all horizontal directions, may be used in lieu of the grid network of ties. Slabs on grade will not be used as ties when significant differential settlement is expected between footings and slab. In such cases, slabs on grade will be cut loose from footings and made free-floating (note that the effective unsupported height of the wall is increased for this condition). Strut ties placed below such slabs will be cushioned or separated from the slab such that slab settlement will not damage the slab or strut ties. Alternatively, it may be more economical to overexcavate the soil under the footings and recompact to control differential settlements under vertical loads and to increase passive resistance of the sides of the footings under lateral loads so as to eliminate the need for footing ties. Slabs on ground when used as a foundation tie will have minimum reinforcing according to ACI 7.12. As a minimum, a mat of #4 at 16 inches each way is recommended.

e. *Overturning. The* overturning moment at the base of the building is resisted by the soil through the foundation. The total load on the soil is not changed, but there is a change in the distribution of the soil pressure. For isolated spread footings, the design requirement is simply to provide for vertical components of the overturning moment in combination with the vertical forces due to dead and live loads. For wall footings, there may be enlarged footings under the boundary members, and these will have increased loads as indicated above for isolated footings, but there will also be loads on grade beams or other connecting elements.

f. Differential sett!ement. Earthquake vibrations may cause consolidation or liquefaction of loose soils, and the resultant settlement of building foundations usually will not be uniform. For rigid structures supported on individual spread footings bearing on such material, excessive differential settlements can damage the superstructure. Stabi-

lization of the soil prior to construction or the use of piles, caissons, or deep piers bearing on a firm stratum may be the solution to this problem.

10-3. Design of elements.

a. General. The mechanism used for the transmission of horizontal forces may be friction between floor slab and ground; friction between bottom of footing and ground; and/or passive resistance of earth against vertical surfaces of footings, grade beams, or basement walls. The overturning effects, which require a careful analysis of permissible overloads for the combined effect of vertical and lateral loads, must be considered in the foundation design. Net upward forces must be resisted by anchorage into the foundation. Stability against overturning must be provided for the short-time loading during an earthquake (or wind) without creating disparities in the foundation configuration that would result in significantly different foundation settlements due to gravity loads. These differential settlements could create more damage to the structure than the short-time deformations that might occur under the highly increased soil pressures due to earthquake effects.

b. Slabs on ground. Slabs on ground are often thought of as nonstructural but will in fact be nonstructural only if detailed to be unconstrained by adjacent elements. In seismic design the slab on ground should be utilized as a connecting, tying, stiffening element by suitable details of joints and reinforcing in the slab and at the edges of the slab.

c. *Grade beams.* Grade beams may be used to stiffen spread footings where columns are intended to have fixed bases; grade beams may also develop lateral resistance in passive pressure on their sides, especially if stiffened by an integral slab on ground. Passive resistance values vary greatly with type of soil and depth. Adequacy of passive resistance should be determined by the geotechnical engineer. Passive resistance or lateral bearing values are permitted only where concrete is deposited directly against natural ground or the backfill is well compacted. Passive resistance should not be used where the lateral bearing surface is close to an excavation unless such excavation is carefully backfilled with well-compacted material. The shear capacity of the soil between such bearing surface and open or poorly compacted excavation or a similar depression may be inadequate to provide the needed resistance.

d. Basement walls. Basement walls can develop passive pressure for normal forces. The comments on passive pressure for grade beams apply.

e. *Spread footings.* Spread footings resist vertical loads through bearing pressure on the bottom and resist horizontal loads through friction on the bottom and passive pressure on the sides.

f. Wall footings. Wall footings resist lateral loads through friction on the bottom,

g. Piles. Piles driven into soft surficial soils must transfer the base shear into stiffer soils at lower levels. This involves bending of the piles. Criteria for design should be obtained from the geotechnical engineer. Where subsurface conditions vary over the site, the effective lengths of piles in bending may vary. The resulting variation in relative rigidity causes some piles to carry more lateral load than others and must be considered in the foundation design.

h. Batter piles. The use of batter piles should be avoided. Their greater lateral stiffness relative to the vertical piles attracts most of the lateral forces to themselves, resulting in an unbalanced lateral load resisting system. Because the inclination of the batter piles is usually small, very large vertical components of force are developed between the vertical and adjacent batter piles. The pile cap must be detailed to accommodate these forces, and the caps may need to be stiffened by horizontal grade beams to prevent rotation under these forces.

i. Foundation ties. Ties will be designed to carry an axial tension and compression horizontal force equal to 10 percent of the larger column load. The minimum tie will be 12 inches by 12 inches with four #5 longitudinal bars and #3 ties at 12 inches oc.

j. Retaining walls. Refer to chapter 13.

k. Mixed systems. When subsurface conditions vary significantly across a site, it is sometimes effective to use mixed systems, e.g., combinations of drilled piers and spread footings. Geotechnical consultation is especially important for mixed systems in order to control differential settlements. The difference in lateral stiffnesses between the spread footings and drilled piers must be considered in the foundation earthquake design.

10-4. Foundation capacities.

a. Stress basis. Foundations are generally of concrete designed on an ultimate strength basis, but the resisting capacities of the soils are generally prescribed on a working-stress or service load basis. This condition calls for care in developing foundation design forces from the reactions given by frame analyses and care in interpreting the allowable soil stresses given by the geotechnical engineer. In no case will the footing size be less than that required for static loads alone.

b. Allowable stresses. The structural engineer and the geotechnical engineer should resolve potential conflicts between short-term and long-term

effects. A pitfall in the design of footings that carry vertical components of seismic forces is to proportion the footing for large short-term loads to meet allowable stresses that are intended to control long-term settlements. The results may be excessive seismic design and unnecessary differential settlements.

c. Combinations of modes of resistance. Buildings generally have not had problems of sliding in past earthquakes. The mechanism of resistance is probably quite complex, including a number of modes of resisting working more or less simultaneously. In some cases it may be possible to combine friction, passive pressure, and other effects; however, this should be done only under the guidance of the geotechnical engineer.

CHAPTER 11

ARCHITECTURAL ELEMENTS

11-1. Introduction. This chapter defines architectural elements, discusses their participation and importance in relation to the seismic design of the structural system, and prescribes the criteria for their design to resist damage from seismic lateral forces. The fundamental principle and underlying criterion of this chapter are that the design of architectural elements will be such that they will not collapse and cause personal injury due to the accelerations and displacements induced by severe seismic disturbances, and that the architectural elements will withstand more frequent but less severe seismic disturbance without excessive damage and economic loss.

11-2. Definition. Architectural elements are elements such as partitions, stairways, windows, suspended ceilings, parapets, building ornamentations and appendages, and storage racks. They are called architectural because they are not part of the vertical or lateral load carrying systems or the mechanical or electrical systems. Although they are usually shown on the architectural drawings, they often have a structural aspect. The architect will consult with the structural, mechanical, and electrical engineers when dealing with these elements. Examples of architectural elements that have a structural aspect follow.

a. *Nonstructural walls.* A wall is considered "architectural" or "nonstructural" when it does not participate in the resistance to lateral forces. This is the case if the wall is isolated, i.e., not connected to the structure at the top and the ends, or if it is very flexible relative to the structural wall frames. Note that an isolated wall must be capable of acting as a cantilever from the floor or be braced laterally.

b. Curtain walls and filler walls. A curtain wall is an exterior wall, usually of masonry, that lies outside of, and usually conceals, the structural frame. A filler wall is an infill, usually of masonry, within the members of a frame. These are often considered architectural if they are designed and detailed by the architect, but they can act as structural shear walls. If they are connected to the frame, they will be subjected to the deflections of the frame and will participate with the frame in resisting lateral forces.

c. Partial infill walls. A partial infill wall is one that has a strip of windows between the top of the solid infill and the bottom of the floor above or has a vertical strip of window between the one or both ends of the infill and a column. Such walls require special treatment: if they are not properly isolated from the structural system they will act as shear walls. The wall with windows along the top is of particular concern because of its potential effect on the adjacent columns. The columns are fully braced where there is an adjacent infill but is unbraced in the zone between the windows. The upper, unbraced part of the column is a "short column," and its greater rigidity (compared with other unbraced columns in the system) must be accounted for in the design.

d. Precast panels. Exterior walls that have precast panels attached to the frame are a special case. The general design of the walls is usually shown on the architectural drawings, while the structural details of the panels are usually shown on the structural drawings. Often the structural design is assigned to the General Contractor so as to allow maximum use of the special expertise of the selected panel subcontractor. In such cases, the structural drawings will include design criteria and representative details in order to show what is expected. The design criteria will include the required design forces and the frame deflections that must be accommodated by the panels and their connections.

11-3. Design criteria. An architectural element must safely resist horizontal forces equal to the quantity ZI_pC_p times its own weight, W_p, and must be capable of conforming (accommodating) to the lateral deflections that it will be subjected to during the lateral deformation of the building.

a. *Lateral forces. The* equivalent static lateral force that is applied to architectural elements is given by SEAOC equation 1–10, with C_p values given in SEAOC Table l-H. In general, the value of C_p is 0.75; however, for ornamentation, parapets, and other appendages, where the potential for collapse and injury is greater, C_p is 2.0. For exterior wall panels, C_p is 0.75; however, the special provisions of SEAOC lH2d(2) apply.

b. Deflections. For the design of the structure, lateral deflections or drift of a story relative to its adjacent story is not to exceed $0.04/R_w$ nor 0.005 times the story height for buildings having a period of less than 0.7 second, and $0.03/R_w$ nor 0.004 times the story height for buildings having a period of 0.7 second or greater unless it can be demonstrated that greater drift can be tolerated

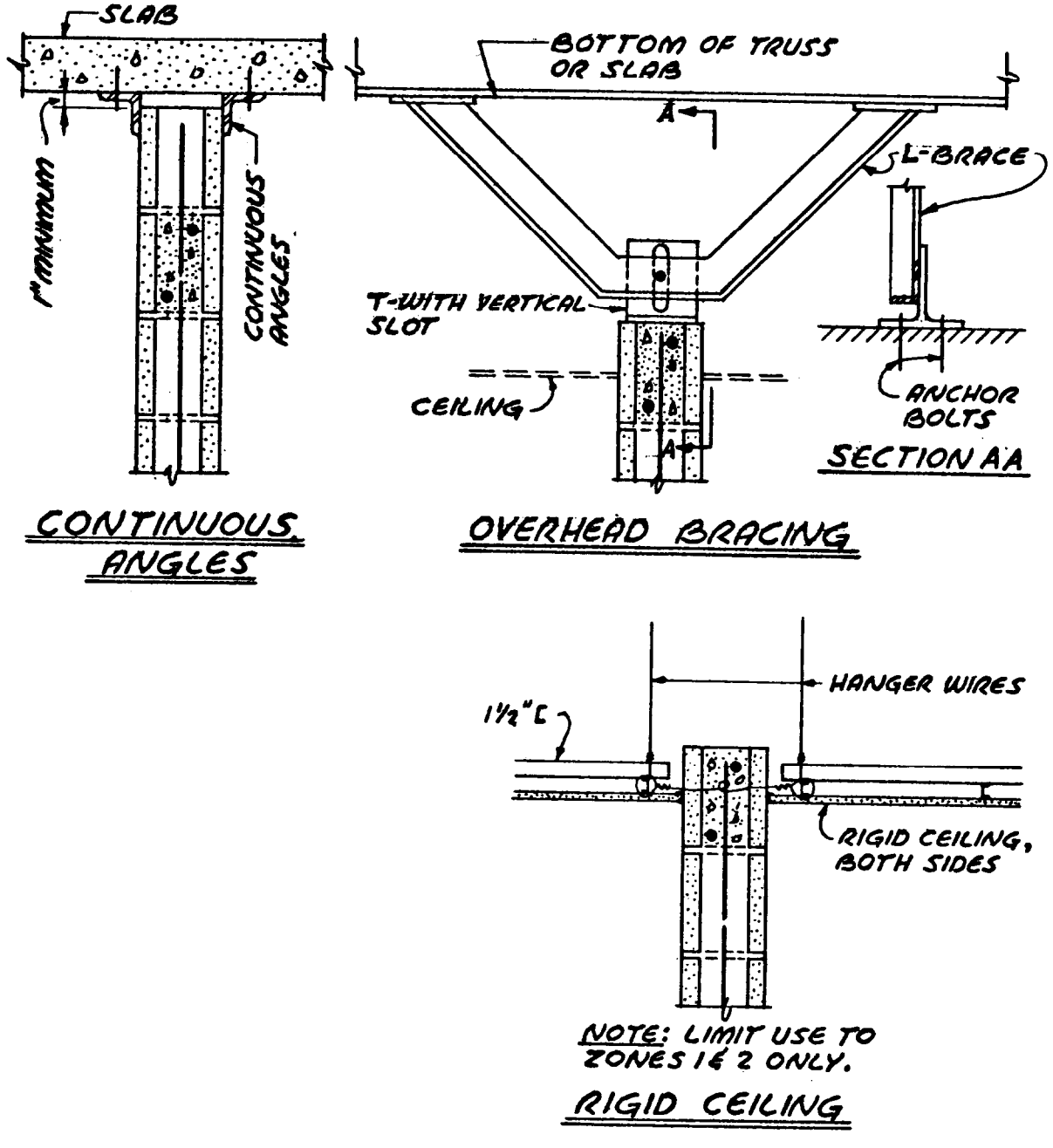

Lateral Supports - Nonstructural Partition

Figure 11–1. Typical details of isolation of walls.

(SEAOC 1E8). The deformation is calculated from the application of the required lateral forces as discussed in chapter 4.

(1) Architectural elements will be designed and detailed to conform to the structural deformations without damage.

(2) Exterior elements are required to allow for relative movement equal to $3R_w/8$ times the calculated elastic story displacement caused by required seismic forces or ½ inch per story, whichever is greater (SEAOC lH2d(2)).

(3) The effects of adjoining rigid elements on the structural system will also be investigated (SEAOC lH2d(l)).

11-4. Detailed requirements.

a. Partitions. Partitions are classified into two general categories rigid and nonrigid. Reference is also made to chapter 6, paragraph 6-6.

(1) *Rigid partitions.* This category generally refers to nonstructural masonry walls. Walls will be isolated where they are unable to resist in-

plane lateral forces to which they are subjected, based on relative rigidities. Typical details for isolation of these walls are shown in figure 11–1. These walls will be designed for the prescribed forces normal to their plane.

(2) *Nonrigid partitions.* This category generally refers to nonstructural partitions such as stud and drywall, stud and plaster, and movable partitions. When constructed according to standard recommended practice, it is assumed that the partitions can withstand the design in-plane drift of 0.005 times the story height (i.e., 1/16 inch per foot of height) without damage. Therefore, if the structure is designed to control drift within the prescribed limits, these partitions do not require special isolation details. They will be designed for the prescribed seismic force acting normal to flat surfaces. However, wind or the usual 5 pounds per square foot partition load will usually govern. If the structural design drift is not controlled within the prescribed limits, isolation of partitions will be required for reduction of nonstructural damage. Economic justification between potential damage and costs of isolation will be considered. A decision has to be made for each project as to the role, if any, such partitions will contribute to damping and response of the structure, and the effect of seismic forces parallel to the partition resulting from the structural system as a whole. Usually, it may be assumed that this type of partition is subject to future alterations in layout location. The structural role of partitions may be controlled by height of partitions and methods of support.

b. Veneered walls. There are two methods for attaching veneer to a backup structural wall (see fig 11-2).

(1) Anchored veneer is a masonry facing secured by joint reinforcement or equivalent mechanical tie attached to the backup. All required load-carrying capacity (both vertical and lateral) will be provided by the structural backup wall. The veneer will be nonbearing and isolated on three edges to preclude it from resisting any load other than its own weight, and in no case shall it be considered part of the wall in computing the required thickness of a masonry wall. The veneer will be not less than 1½ inches nor more than 5 inches thick. The veneer will be tied to the structural wall with joint reinforcement or 3/16-inch round corrosion resisting metal ties capable of resisting in tension or compression the wind load or two times the weight of veneer, whichever governs. Maximum spacing of ties is 16 inches, and a tie must be provided for each 2 square feet of wall area. Adjustable ties are not permitted in Seismic Zones 3 and 4. They maybe used in Zones 1 and 2 if the basic wind speed is less than 100 mph. If adjustable ties are used, they will be the double pintle-eye type, with the minimum wire size being 3/16 inch; play within the pintle will be limited to 1/16 inch, and the maximum vertical eccentricity will not exceed 1/2 inch. The maximum space between the veneer and the backing will not exceed 3 inches unless spot mortar bedding is provided to stiffen the ties. A noncombustible, noncorrosive horizontal structural framing will be provided for vertical support of the veneer. The maximum vertical distance between horizontal supports will not exceed 25 feet above the adjacent ground and 12 feet maximum spacing above the 25-foot height.

(2) Adhered veneer is masonry veneer attached to the backing with minimum 3/8 inch to maximum ¾ inch mortar or with approved thin set latex Portland cement mortar. The bond of the mortar to the supporting element will be capable of withstanding a shear stress of 50 psi. Maximum thickness of the veneer will be limited to 1 inch. Since adhered veneer is supported through adhesion to the mortar applied over a backup, consideration will be given for differential movement of supports, including that caused by temperature, shrinkage, creep, and deflection. A horizontal expansion joint in the veneer is recommended at each floor level to prevent spalling. Vertical control joints should be provided in the veneer at each control joint in the backup.

c. Connections of exterior wall panels. Precast, nonbearing, nonshear wall panels or other elements that are attached to or enclose the exterior will be designed and detailed to accommodate movements of the structure resulting from lateral forces or temperature changes. The concrete panels or other elements will be supported by means of cast-in-place concrete or by mechanical devices. Connections and panel joints will be designed to allow for the relative movement between stories and will be designed for the forces specified in SEAOC lH2d(2). Connections will have sufficient ductility and rotation capacity so as to preclude fracture of the concrete or brittle failures at or near welds. Inserts in concrete shall be attached to or hooked around reinforcing steel or otherwise terminated so as to effectively transfer forces to the reinforcing steel. Connections to permit movement in the plane of the panel for story drift may be properly designed sliding connections using slotted or oversize holes, or may be connections that permit movement by bending of steel components without failure. Typical design forces are shown in figure 11–3.

d. Suspended ceiling systems. Seismic design is required in Zones 2, 3, and 4. Earthquake damage to suspended ceiling systems can be limited by

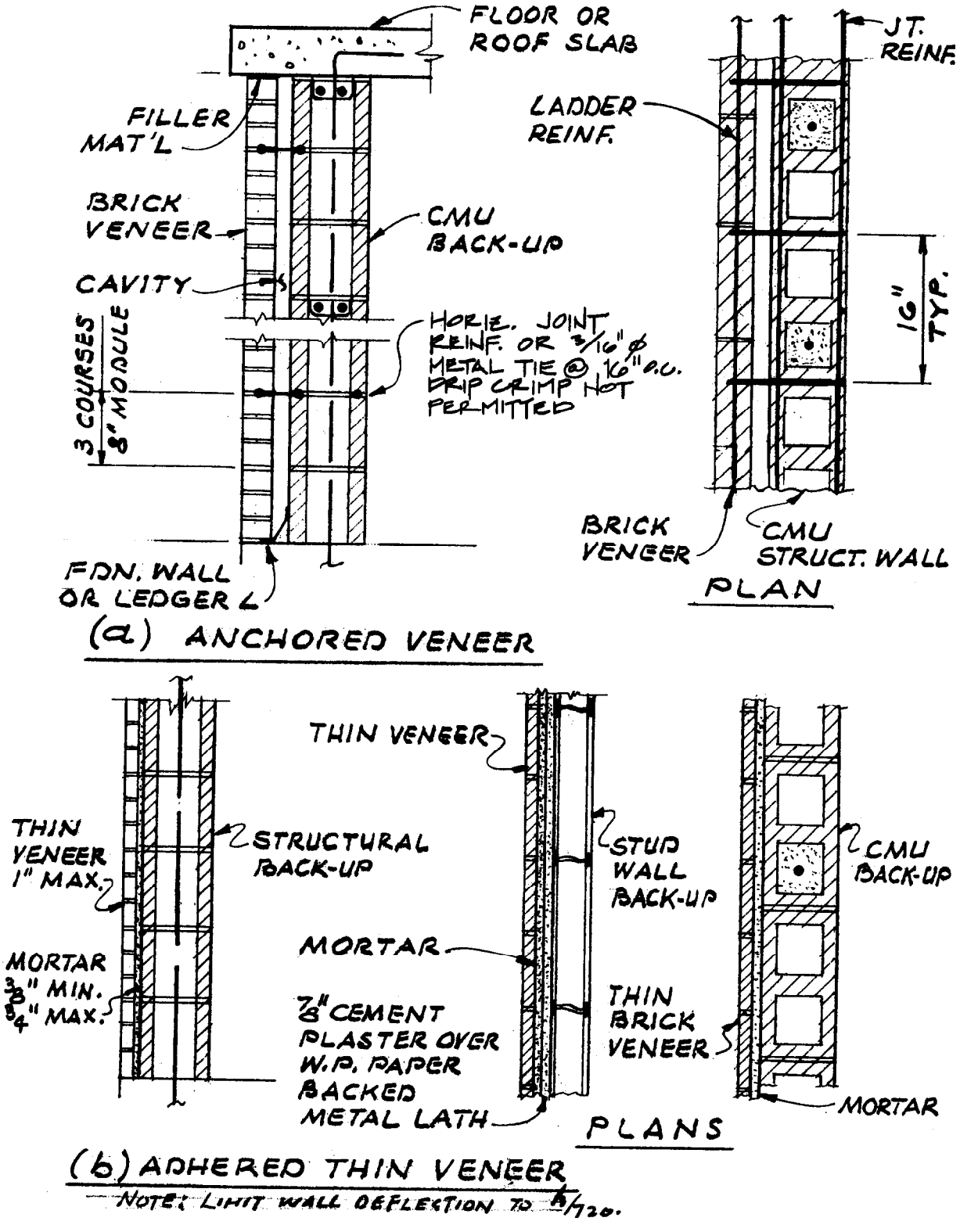

Figure 11-2. Veneered walls.

proper support and detailing. Suspended ceiling framing systems will be designed for forces prescribed in SEAOC Table l–H. The ceiling weight, W_p, will include all light fixtures and other equipment laterally supported by the ceiling. For purposes of determining the lateral force, a ceiling weight of not less than 4 pounds per square foot will be used. The support of the ceiling systems will be by positive means such as wire or an approved seismic clip system. Typical details of suspended acoustical tile ceilings are shown in figure 11-4.

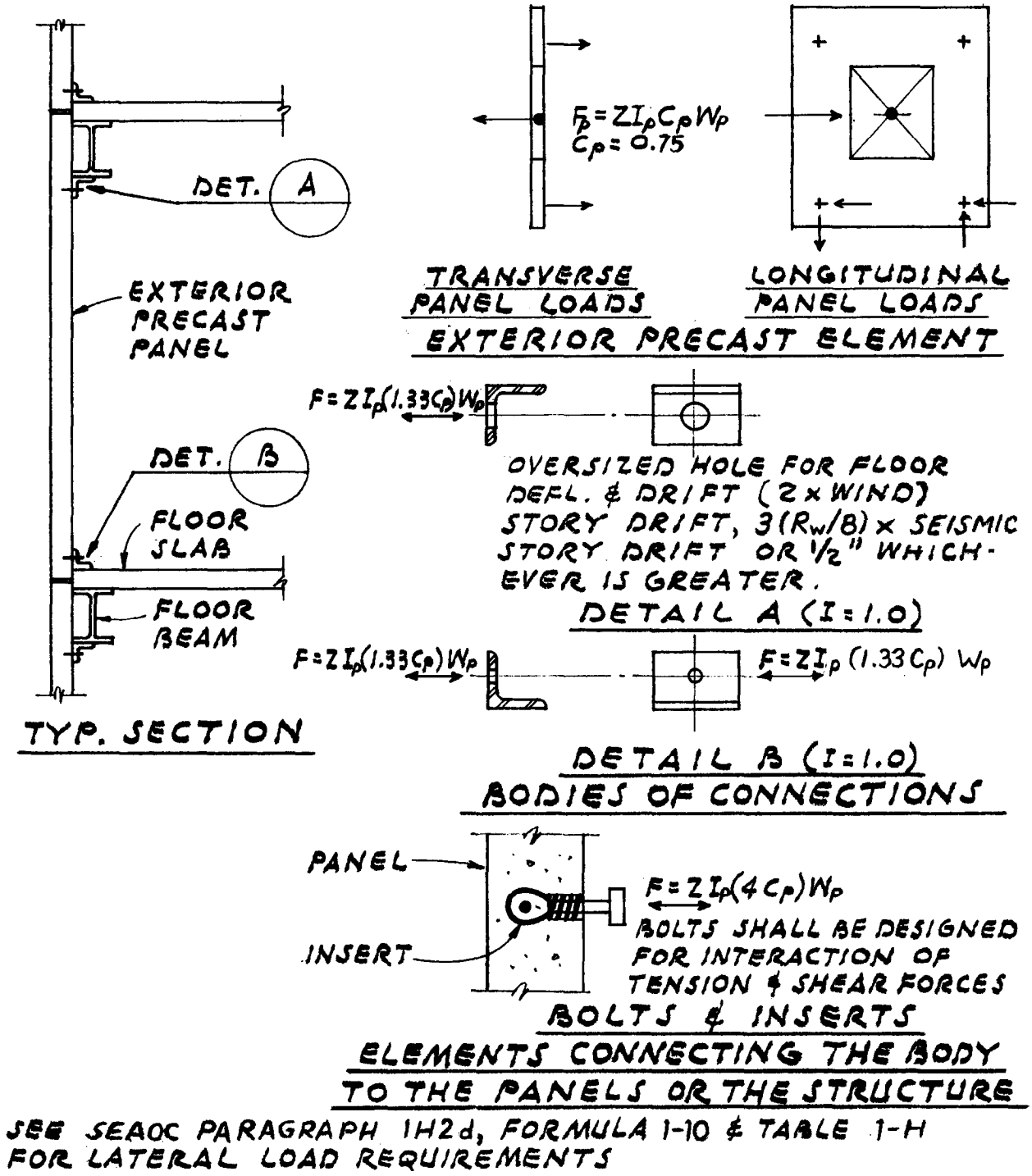

Figure 11-3. Design forces for exterior precast elements.

e. Parapets, ornamentation, and appendages. These elements will be designed for forces resulting from C_p equal to 2.0 as prescribed in SEAOC lG and Table l–H. For the design of parapets, refer to chapter 6, paragraph 6-6c.

f. Window frames. Window frames will be designed to accommodate deflections of the structure without imposing a load on the glass. As glass is a brittle material, a considerable hazard of falling glass may be present. It is particularly serious if the glass is above and adjacent to a public way. This hazard can be eliminated by proper isolation between glass and its enclosing frame. It is obvious that the magnitude of isolation required depends upon the drift and the size of the individual pane or enclosing frame. Thus a pane of glass in a full-story-height frame should have an isolation or movement capability as great as the maximum

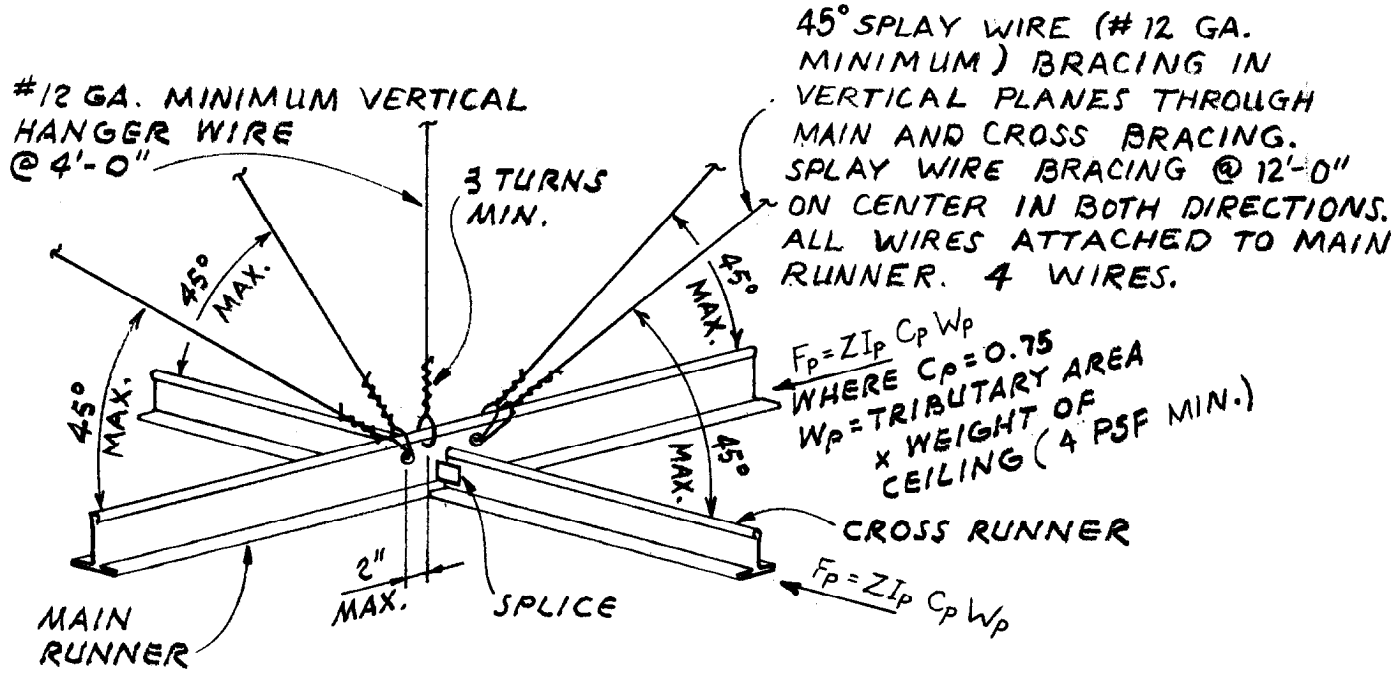

TYP. SPLAY BRACING DETAIL-SUSPENDED CEILING SYSTEM

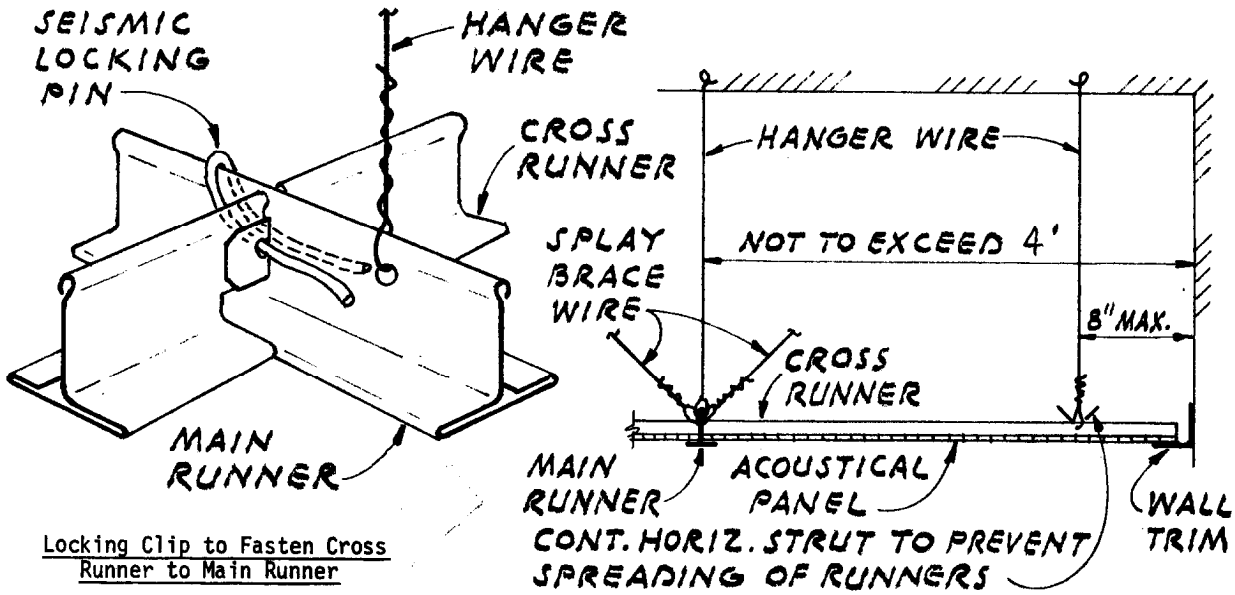

Locking Clip to Fasten Cross Runner to Main Runner

Splices and intersections of runners shall be attached with mechanical interlocking connectors such as pop rivets, screws, pins, plates with bent tabs, or other approved connectors. Design connectors for 2 x design load or ultimate axial tension or compression (minimum 120 pounds).

SUSPENDED CEILING DETAIL AT WALL

Note: THE DETAILS IN THIS FIGURE APPLY ONLY IN SEISMIC ZONES 2,3, AND 4.

Figure 11-4. Suspended acoustical tile ceiling.

possible drift (e.g., $3R_w/8$ times the calculated elastic story displacement prescribed in SEAOC lH2d). The actual isolation clearance will depend on the geometry and deformation characteristics of enclosing frame, frame support, and structural system. Special care will be exercised in the field to see that such isolation is actually obtained.

g. *Stairways.* Stairways tend to act like struts; therefore, the rigidity of the stairway, relative to the structure, will be considered. In some cases the stairway will be isolated in order to prevent damage to itself by the building frame, or to prevent the stair from imposing an unwanted constraint on the frame.

h. Storage racks.

(1) Storage racks supported at grade will be treated as equipment on the ground according to chapter 12, paragraph 12–5, with W_P equal to the weight of the rack plus its contents.

(a) Rigid racks. Racks having a period of vibration less than 0.06 second will be governed by equation 12–3, with $C_P = 0.75$, as given in SEAOC Table l-H; thus, $Fp = 0.5\ ZI_PC_PW_P$.

(b) Flexible racks. Racks having a period of vibration greater than 0.06 second will be treated as nonbuilding structures as prescribed in Chapter 13. The minimum lateral force is obtained from SEAOC equation l–l, with $R_w = 5$, as given in SEAOC Table l-I; thus, V = 0.20 ZICW. The value of C used for design will not be less than 2.5.

(2) Storage racks supported above grade will be designed to chapter 12, paragraph 12-3 if rigid or paragraph 12-4 if nonrigid.

11-5. Alternative designs. Where an accepted national standard or approved test data provide the basis for earthquake resistance of a particular type of architectural element or rack, such standard or data may be accepted as a basis for design under certain limitations. (See SEAOC 1G5.)

CHAPTER 12

MECHANICAL AND ELECTRICAL EQUIPMENT

12-1. Introduction. This chapter prescribes the criteria for structural design of anchorages and supports for mechanical and electrical equipment in seismic areas.

a. Design goals. The goal of design is that the anchorages and supports will withstand the accelerations induced by severe seismic disturbances without collapse or excessive deflection and withstand the accelerations induced by less severe seismic disturbances without exceeding yield stresses. The design forces are related to the inertia forces on the equipment and are calculated on the weight of the equipment; accordingly, design provisions often speak of equipment. However, the design is for the supports of the equip ment, not the equipment itself. Ordinary equipment, which is fabricated at some distance from the site and is transported by truck and/or railroad, is assumed to have adequate strength. Critical equipment, which may have to be substantiated by design or test, is beyond the scope of this manual.

b. Seismic forces. The design force coefficients applied to equipment supports are generally higher than the force coefficients used in the design of buildings. One reason is the amplification of the ground motion acceleration transmitted to elements in the elevated stories of a building due to dynamic response. Another reason is that equipment supports often lack the extra margin of safety provided by reserve strength mechanisms, such as participation of architectural elements, inelastic behavior of structural elements, and redundancy in the structural system, that are characteristic of buildings.

12-2. General. All equipment anchorages and supports designed under the provisions of this chapter will conform to the following requirements:

a. Rigid and/or rigidly supported equipment. Rigid equipment that is rigidly attached to the structure will be designed for seismic forces prescribed by SEAOC lG. Limitations, exceptions, and commentary are stated in paragraph 12-3.

b. Nonrigid or flexibly supported equipment. Nonrigid or flexibly supported equipment will be designed with consideration given both to the dynamic properties of the equipment and to the building or structure in which it is placed. For equipment supported by a structure and located above grade on a structure, SEAOC 1G2c will be modified by the procedure outlined in paragraph 12-4.

c. Equipment on the ground. Equipment supported on the ground will be designed in accordance with SEAOC lG as supplemented by paragraph 12-5.

d. Weight limitations. Equipment in buildings will be considered to be within the scope of this chapter if the maximum weight of the individual item of equipment does not exceed 10 percent of the total building weight or 20 percent of the total weight of the floor at the equipment level. The response of equipment is dependent upon the response of the building in which it is housed. If the weight of the equipment is appreciable, relative to the weight of the building, the interaction of the equipment with the building (i.e., the coupling effect) will change the building response characteristics. It is assumed that equipment within the above weight limitations has a negligible effect on the response of the building. Equipment that is not within the above limitations is outside the scope of this manual and must be designed using a more rigorous method of analysis.

e. Rigorous analysis. No portion of this chapter will be construed to prohibit a rigorous analysis of equipment and the supporting mechanism by established principles of structural dynamics. Such an analysis will demonstrate that the fundamental principle and underlying criterion of paragraph 12-1 are satisfied. In no case will the design result in capacities less than 80 percent of those required by SEAOC lG.

f. Securing equipment. Friction resulting from gravity loads as a method of resisting seismic forces is not acceptable and will not be allowed. Both vertical and horizontal accelerations are possible during an earthquake. Under vertical acceleration, the gravity force required to maintain friction can be greatly diminished. This could result in a reduction of the friction force available to resist horizontal seismic loads, as simultaneous vertical and horizontal accelerations are possible. Thus, equipment will be secured by bolts, embedment, or other acceptable positive means of resisting horizontal forces. Refer to paragraph 12-11 for typical details.

g. Special *requirements.* Requirements for lighting fixtures and supports, piping, stacks, bridge

cranes and monorails, and elevator systems are covered in paragraphs 12–6 through 12-10, respectively.

12-3. Rigid and/or rigidly supported equipment in buildings. This paragraph applies to equipment above grade. See paragraph 12-5 for equipment supported at or below grade. Rigid and/or rigidly supported equipment will be considered to be those equipment units and equipment supporting systems for which the period of vibration as defined in paragraph 12-4b is estimated to be less than 0.06 second (i.e., frequency of vibration greater than 17 Hz). Compact equipment directly attached to a concrete floor will be considered rigidly supported. This type of equipment-supporting system is very stiff, and the period of vibration is very short (i.e., there is a high frequency of vibration). Equipment not satisfying the rigidity requirement will be designed according to the criteria of paragraph 12-4.

a *Examples of rigidly mounted equipment.*

(1) A boiler bolted or otherwise securely attached to a concrete pad or directly attached to the floor of the structure.

(2) An electrical panel board securely attached to solid walls or to the studs of stud walls.

(3) An electric motor bolted to a concrete floor.

(4) A floodlight having a short stem bolted to a wall.

(5) A rigidly anchored heat exchanger.

b. Equivalent static force. The equivalent static lateral force is given by SEAOC equation 1-10. C_p, as prescribed in SEAOC Table l-H, is equal to 0.75 for all equipment and machinery that is rigid and rigidly supported by the building (see para 12–5 for equipment on the ground). For cantilevered portions of chimneys and smokestacks, C_p is 2.0; however, these items must also be investigated for the criterion stated in paragraph 12–8.

12-4. Nonrigid or flexibly supported equipment in buildings. This paragraph applies to equipment above grade. See paragraph 12-5 for equipment supported at or below grade. Equipment that does not satisfy the rigidity requirements of paragraph 12-3 will be considered to be nonrigid or flexibly supported. For nonrigid and flexibly supported equipment, the appropriate seismic design forces will be determined with consideration given to both the dynamic properties of the equipment and to the building or structure in which it is placed (SEAOC 1G2c). An approximate procedure, which considers these dynamic properties within certain limits, is presented below. This approximate procedure is deemed to meet the SEAOC requirements. Nonrigid or flexibly supported equipment that does not qualify within the limits of this chapter is outside the scope of this manual and will be designed using a more rigorous method of analysis.

a. Single-mass system. The approximate procedure is based on the equipment responding as a single-degree-of-freedom system to the motion of one of the predominant modes of vibration of the building at the floor level in which the equipment is placed. Therefore, if the equipment and its supporting system cannot be approximated by a single-degree-of-freedom system (i.e., a simple oscillator represented by a single mass and a simple spring), a more rigorous analysis is required. Some examples of systems that do qualify under this procedure follow:

(1) Rigid equipment attached to the floor slab with a spring isolation system.

(2) Rigid equipment rigidly attached to a flexible supporting system that is rigidly attached to the floor slab.

(3) Rigid equipment attached by a cantilever support from the structure.

(4) Nonrigid equipment that can be represented as a single-mass system and that is rigidly attached to the structure.

EXCEPTIONS: Equipment that can be considered to have uniformly distributed mass will be designed for seismic forces in a manner similar to stacks (para 12-8).

b. Equipment period estimation. For equipment responding as a single-degree-of-freedom system, the period of vibration, T_a, is equal to 2π times the square root of the quantity mass/stiffness. In terms of inch and pound units, this equation becomes

$$T_a = 2\pi\sqrt{\frac{W/g}{k}} = 0.32\sqrt{\frac{W}{k}} \qquad \text{(eq 12-1)}$$

where

T_a = fundamental period (see)

k = stiffness of supporting mechanism in terms of load per unit deflection of the center of gravity (lb/in.)

W = weight of equipment and/or equipment supports (lb), which is equal to the mass times the acceleration of gravity

g = acceleration of gravity at 386 in./sec^2

In lieu of calculating the period of vibration using equation 12–1, a properly substantiated experimental determination will be allowed.

c. *Building period estimation. If* a building has more than one story it is considered to be a multi-degree-of-freedom system with more than one mode of vibration. Flexible equipment located in the building can be excited to respond to any of the predominant modes of the building vibration. Therefore, when investigating the response of

equipment to the floor motion response, all predominant modes of vibration must be considered. The building parameters will be based *on* realistic estimations that are not restricted to limitations used in building design criteria.

(1) *Fundamental mode of vibration.* The fundamental period of the building vibration T_1 corresponds to the period T used in the design of the building. A realistic estimation of T_1 will be obtained from SEAOC Method B as illustrated by SEAOC equation 1-5.

(2) *Higher modes of vibration.* In addition to the fundamental mode of vibration, the predominant higher modes of vibration must be considered.

(a) For regular structures (SEAOC 1E4) with fundamental periods less than 2 seconds, include the second and third modes of vibration (translational modes in the direction *under* consideration). In lieu of a detailed analysis, the second-mode period of vibration may be assumed to equal 0.30 times the fundamental period of vibration (i.e., $T_2 = 0.30\ T_1$ and the third-mode period of vibration may be assumed to equal 0.18 times the fundamental period of vibration (i.e., $T_3 = 0.18\ T_1$).

(b) For buildings with fundamental periods greater than 2 seconds, the fourth mode and possibly the fifth mode should also be included.

(c) For irregular buildings, the dynamic characteristics of the structure must be investigated to determine other (nontranslational or torsional) predominant modes.

(d) In some cases, the vertical modes of vibration should be considered. This applies to floor systems that are flexible in the vertical direction and equipment sensitive to vertical accelerations.

d. Appendage magnification factor. The appendage magnification factor (MF) is the ratio of the peak motion of the appendage (in this case, equipment) to the peak motion of the floor level that it is mounted on. A theoretical value of the MF is generally based on steady-state motion due to the floor responding as a uniform sine wave. However, buildings that are responding to earthquakes move in a somewhat random fashion and thereby do not generate magnification factors as large as calculated by theoretical steady-state response. Following are discussions of the steady-state response and of an approximate method for estimating appendage magnification factors.

(1) The magnification factor for an idealized single mass oscillator, with a period T_a and damping characteristics at 2 percent of critical damping, responding to a steady-state sinusoidal acceleration having a period T, is plotted in figure 12-1. If T_a is essentially equal to T, MF equals 25. In other words, at a condition of resonance, the maximum acceleration of the oscillator mass will be 25 times the peak acceleration of the forcing motion. This idealized condition depends on the fine-tuning of the two periods, the linearity of the oscillator spring, the uniformity of the input sinusoidal motion, and the length of time of the input motion (at least 25 cycles).

(2) If the oscillator represents the equipment, the floor response represents the steady-state input motion, and the product ZC_P(0.4 *x* 0.75) equal to 0.30 is assumed to be the floor acceleration, the peak acceleration for the equipment is 25 times 0.30g = 7.5g. In other words, the horizontal force on the equipment is seven and one-half times its own weight. However, because of the actual nonlinear characteristics of equipment and buildings and particularly the finite duration of earthquake motion, it is highly unlikely that such a magnification could actually occur to a 2-percent-damped equipment appendage.

(3) In order to approximate a realistic value for a design MF, it is assumed that the periods T_a and T will differ by at least 5 percent; that buildings are not perfectly linearly elastic, especially at high amplitudes of response; that the floor response is not an exact, uniform sine wave; and that the number of high-amplitude floor response cycles is substantially less than 25.

(4) The design MF curve shown in figure 12-2 is presented as an aid to estimating the design response of single-degree-of-freedom appendages, in lieu of more rigorous analysis methods. The peak MF of 25 is reduced to 7.5 by reducing the effectiveness of the period *tuning,* the peak floor response amplitude, and the number of continuous cycles to roughly two-thirds of the idealized values (i.e., 25 x 2/3 x 2/3 x 2/3 = 7.5). The width of the magnification factor is broadened to account for uncertainty of actual period ratios.

e. Equivalent static force. The equivalent static force for the anchorage of flexible and flexibly mounted equipment is given by the equation

$$F_P = ZI_PA_PC_PW_P \qquad \text{(eq 12-2)}$$

which is a modification of the SEAOC rigid equipment equation 1-10, where A_P is the amplification factor for a value of $C_P = 0.75$. The value of A_P is related to the MF values of figure 12-2; however, the maximum value of 7.5 is reduced to a value of 5.0 to account for multimode effects that are assumed to be included in the C_P values of SEAOC Table 1-H (i.e., the C_P value for rigid equipment considers the peak floor acceleration for a combination of modes; however, only one of these modes will excite the single resonance frequency of the

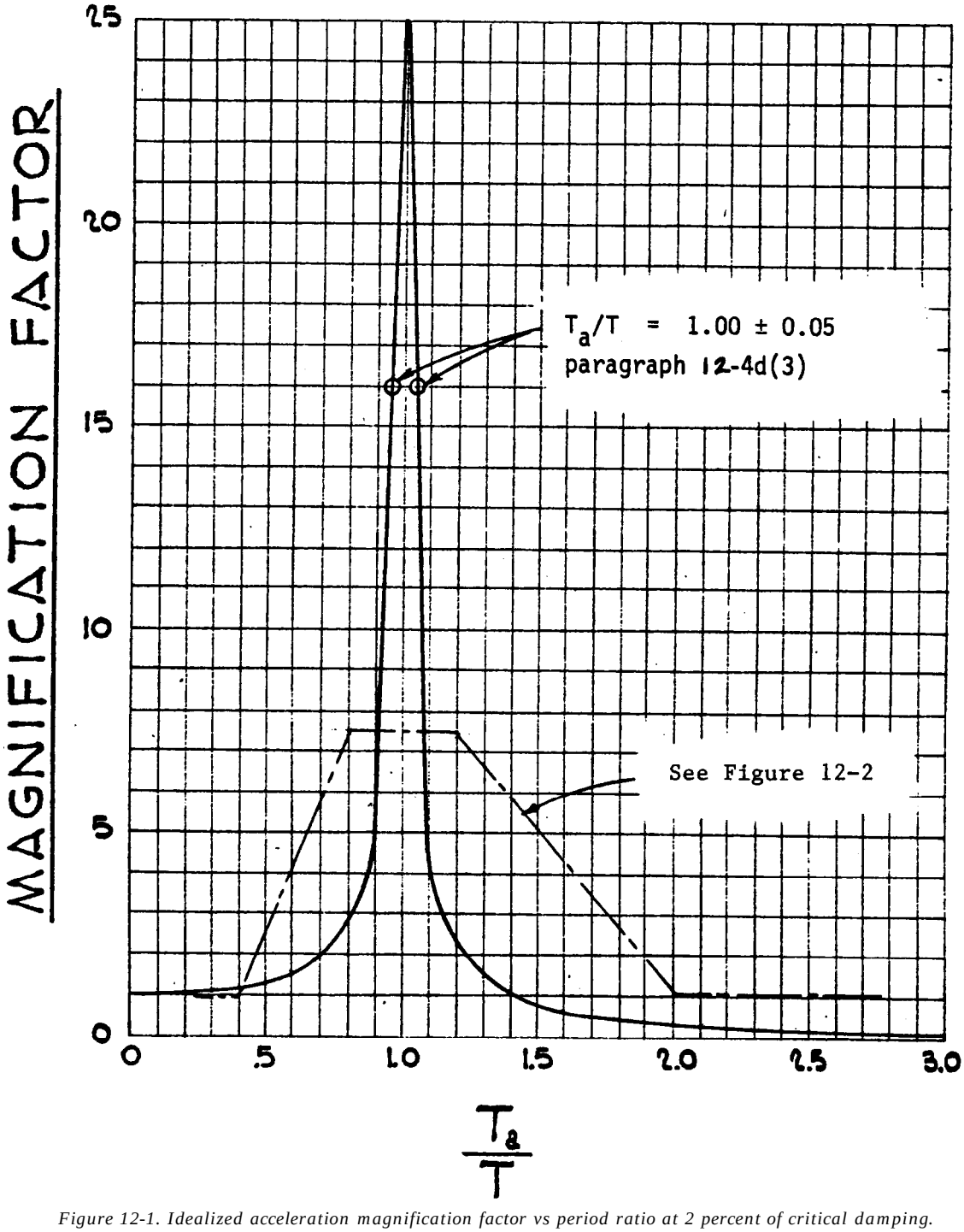

Figure 12-1. Idealized acceleration magnification factor vs period ratio at 2 percent of critical damping.

flexibly mounted equipment). The value of A_p will be determined by one of the alternatives listed below

(1) If the periods of the building and equipment are not known, $A_p = 5.0$.

(2) If the fundamental period of the building is known but the period of the equipment is not known, A_p is determined by table 12-1.

(3) If building and equipment periods are both known, A_p may be approximated by the graphs in figure 12-3.

f. Use of the equivalent-static-force procedure. The force F_p of equation 12-2 will be applied in the same manner as the force F_p for rigid equipment in SEAOC lG. The value of $I_pA_pC_p$ need not exceed 3.75, and in no case will the product A_pC_p be less than the appropriate C_p in SEAOC Table 1–H (i.e., if $C_p = 2.0$, A_p has an equivalent value of 2.67). As an aid to determining the A_p value, the following examples are given.

(1) A standard anchorage system is to be designed for some flexible equipment that will be

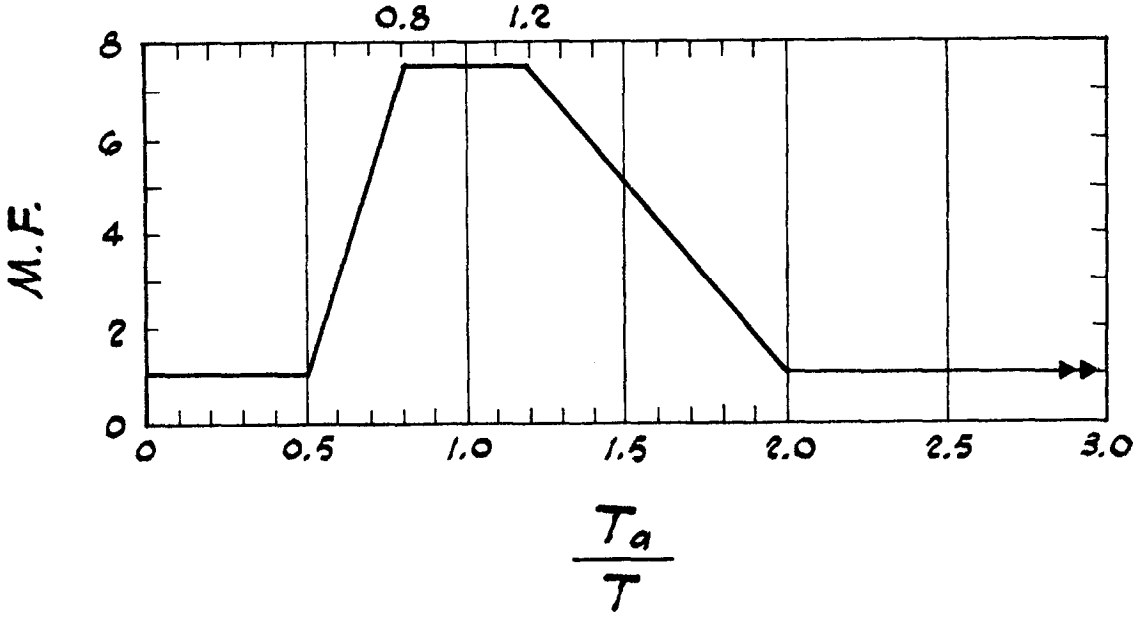

Figure 12-2. Design MF vs period ratio.

Building period T, sec	Less than 0.5	0.75	1.0	2.0	Greater than 3.0
A_p	5.0	4.75	4.0	3.3	2.7

***The values for A_p are based on a modal analysis using the period estimates of paragraph 12-4c, the design magnification factors of paragraph 12-4d, and a fairly standard response spectrum shape, The values in table 12-1 apply to regular structures or framing systems.**

Table 12-1. Amplification factor, A_p for nonrigid or flexibly supported equipment.

placed in several buildings. In order to have one universal anchorage system that will apply to all buildings, use A_p equal to 5.0.

(2) An anchorage system is to be designed for some flexible equipment that will be placed in a building with a fundamental period of less than 0.5 second. Because the period of the equipment is not given, use table 12-1. A_p = 5.0.

(3) An anchorage system is to be designed for some flexible equipment that will be placed in a building with a fundamental period of roughly 1.4 seconds. Because the period of the equipment is not given, use table 12-1. Interpolate between 1.0 second and 2.0 seconds. A_p = 3.7.

(4) An anchorage system is to be designed for equipment with a period T_a equal to 0.2 second.

(a) In a building with T = 0.5 second. Because both the building period and equipment period are known, use graph (a) in figure 12-3. Ta/T = 0.2/0.5 = 0.4, and A_p = 2.7.

(b) In a building with T = 1.4 seconds. Use graph (b) in figure 12-3. T_a/T = 0.2/1.4 = 0.14 <1.2. Thus, A_p is equal to the value in Table 12-1; A_p = 3.7.

(5) An anchorage system is to be designed for equipment with a period T_a equal to 2.0 seconds.

(a) In a building with T = 0.5 second. Use graph (a) in figure 12-3. T_a/T = 2.0/0.5 = 4.0, A_p = 1.0.

(b) In a building with T = 1.4 seconds. Use graph (b) in figure 12-3. T_a/T = 2.0/1.4 = 1.4. Interpolate between the curves for T = 1.0 seconds and T = 2.0 seconds. A_p = 3.0.

g. Lateral bracing. Stiffening of the equipment supports by lateral bracing may be used to reduce the appendage period, thus possibly reducing the design seismic loads. Lateral bracing for compression members expressly designed for seismic forces will not exceed the slenderness limitation of L/r < 200 in any direction.. L is the unbraced length

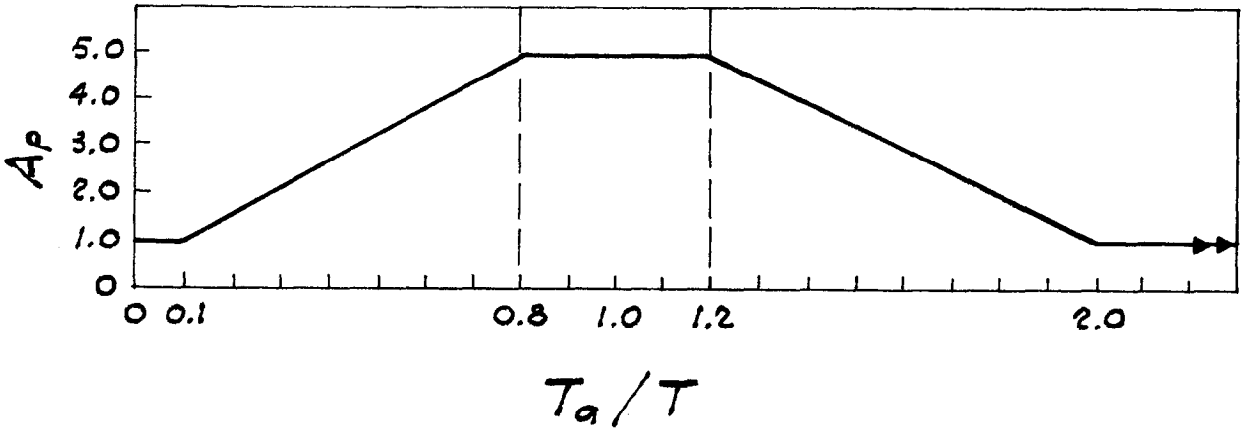

(a) When the fundamental period of the building is equal or less than 0.5 seconds (T < 0.5).

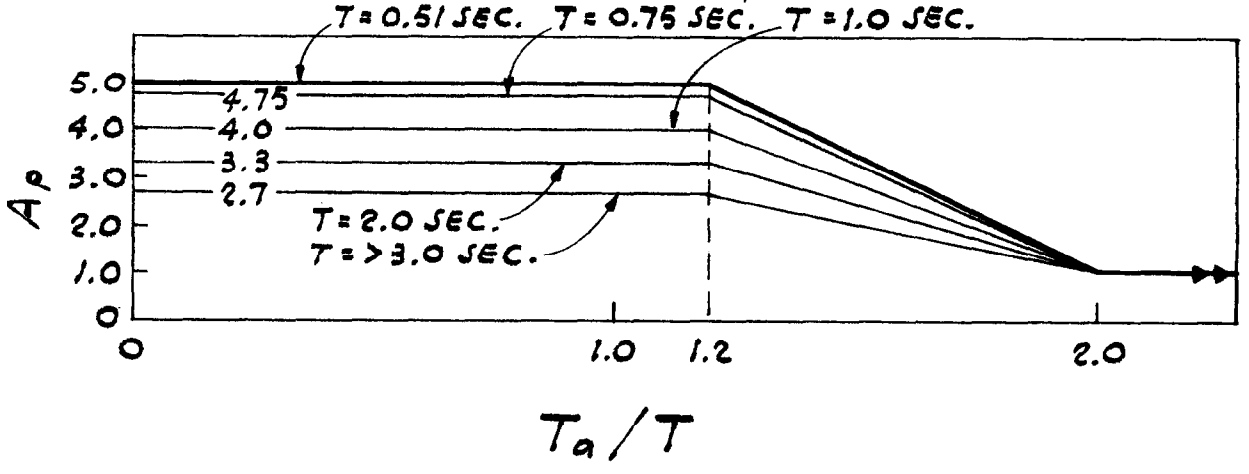

(b) When the fundamental period of the building is greater than 0.5 seconds (T > 0.5). (Note: If $T_a/T < 1.2$, A_p is equal to value obtained from Table 12-1.)

Figure 12-3. Amplification factor, A_p for nonrigid and flexibly supported equipment.

in inches in the direction considered, and r is the corresponding radius of gyration in inches.

h. Storage tank hydrodynamic effects. Storage tanks in which the liquid is rigidly contained need not have hydrodynamic effects included in the seismic design when using the equivalent static force procedure. However, when the sloshing effects of the liquid could be detrimental to the function of the tank, the hydrodynamic effects will be considered. Refer to chapter 13 for guidance in utilizing established principles of fluid mechanics and structural dynamics.

12-S. Equipment on the ground. Equipment on the ground is defined as equipment that is laterally self-supported at or below ground level (SEAOC lG2d). It may be in contact with or buried in the soil; supported by means of a slab, footing, or pedestal directly supported by the soil; or supported on piles embedded in the soil. Such

equipment may be classified in one of two general categories, depending on its size, shape, and dynamic characteristics. The general categories are relatively small, uncomplicated equipment supported on the ground and large or complex equipment that will be considered to be a nonbuilding structure.

a. Small uncomplicated equipment. Weight and rigidity limitations of paragraph 12–2 do not apply to equipment located on the ground because such equipment responds to seismic motion in a manner similar to that of a structure and is not subjected to the additional magnification factors of similar equipment located in the elevated stories of buildings. The equivalent static lateral force is given by the equation

$$F_p = ZI_p(2/3C_p)W_p \qquad \text{(eq 12-3)}$$

which is in conformance with SEAOC equation 1-10 with the 2/3 factor prescribed by SEAOC lG2d. However, the forces will not be less than required by SEAOC 1I, The way SEAOC has been formulated, it appears that forces given by equation 12–3 will never be less than the forces determined from SEAOC 11 unless I_p is greater than I or unless the period of the structure is sufficiently long that the value for C is significantly reduced from the not-to-be-exceeded value of 2.75 (SEAOC lE2a). However, SEAOC lG2d also states that the design forces may be obtained from SEAOC 1I (i.e., they need not be greater than SEAOC 1I forces). This leads to the conclusion that equipment on the ground will be designed as nonbuilding structures and will be governed by SEAOC 1I, as modified by chapter 13.

b. Large or complex equipment. For large or complex equipment, the equipment and support system are classified as nonbuilding structures and their seismic design is governed by the provisions in chapter 13.

12-6. lighting fixtures in buildings. In addition to the requirements of the preceding paragraphs, lighting fixtures and supports will conform to the following seismic requirements in Seismic Zones 2, 3, and 4.

a Materials and construction.

(1) Fixture supports will employ materials that are suitable for the purpose. Cast metal parts, other than those of malleable iron, and cast or rolled threads will be subject to special investigation to ensure structural adequacy.

(2) Loop and hook or swivel hanger assemblies for pendant fixtures will be fitted with a restraining device to hold the stem in the support position during earthquake motions. Pendant supported fluorescent fixtures will also be provided with a flexible hanger device at the attachment to the fixture channel to preclude breaking of the support. The motion of swivels or hinged joints will not cause sharp bends in conductors or damage to insulation.

(3) Each recessed individual or continuous row of fluorescent fixtures will be supported by a seismic resisting suspended ceiling support system and will be fastened thereto at each corner of the fixture; or will be provided with fixture support wires attached to the building structural members using two wires for individual fixtures and one wire per unit of continuous row fixtures. These support wires (minimum 12-gauge wire) will be capable of supporting four times the support load.

(4) A supporting assembly that is intended to be mounted on an outlet box will be designed to accommodate mounting features on 4-inch boxes, 3-inch plaster rings, and fixture studs.

(5) Each surface-mounted individual or continuous row of fluorescent fixtures will be attached to a seismic resisting ceiling support system. Support devices for attaching fixtures to suspended ceilings will be a locking-type scissor clamp or a full loop band that will securely attach to the ceiling support. Fixtures attached to the underside of a structural slab will be properly anchored to the slab at each corner of the fixture.

(6) Each wall-mounted emergency light unit will be secured in a manner that will hold the unit in place during a seismic disturbance.

b. Tests. In lieu of the requirements for equipment supports given in paragraph 12-4, lighting fixtures and the complete fixture supporting assembly may be accepted if they pass shaking-table tests approved by the using agency. Such tests will be conducted by an approved and independent testing laboratory, and the results of such tests will specifically state whether or not the lighting fixture supports satisfy the requirements of the approved tests. Suspension systems for light fixtures, as installed, that are free to swing a minimum of450 from the vertical in all directions and will withstand, without failure, a force of not less than four times the weight they are intended to support will be acceptable.

12-7. Piping in buildings. Pipes are categorized as pipes related to the fire protection system, critical piping in essential and hazardous facilities, and all other piping.

a. Fire protection piping. All water pipes for fire protection systems in seismic zones 1, 2, 3, and 4 will be designed under the provisions of the current issue of the “Standard for the Installation of Sprinkler Systems” of the National Fire Protection Association (NFPA No. 13). To avoid conflict with the NFPA recommendations, the criteria in the

following paragraphs are not applicable to piping expressly designed for fire protection.

b. Critical piping in essential and hazardous facilities. Critical piping is that which is required for life-safety systems, for continued operations after an earthquake, or for safety of the general public. All critical piping in essential and hazardous facilities, located in seismic zones 1, 2, 3, and 4 will be designed using the provisions in paragraph 12-7d.

c. *All other piping.*

(1) Zone O. Piping in seismic zone O facilities is not required to have seismic restraints.

(2) Zone 1. Piping in seismic zone 1 facilities which are not categorized as essential or hazardous is not required to have seismic restraints.

(3) Zones 2, 3, and 4. Piping in seismic zones 2, 3, and 4 facilities not categorized as essential or hazardous is required to have seismic restraints designed using the provisions in paragraph 12-7d, except restraints may be omitted for the following installations:

(4) Gas piping less than 1 inch inside diameter.

(5) Piping in boiler and mechanical equipment rooms less than 1% inches inside diameter.

(6) All other piping less than 2½ inches inside diameter.

(7) All electrical conduit less than 2½ inches inside diameter.

(8) All rectangular air-handling ducts less than 6 square feet in cross-sectional area.

(9) All round air-handling ducts less than 28 inches in diameter.

(10) All piping suspended by individual hangers 12 inches or less in length from the top of pipe to the bottom of the support for the hanger.

(11) All ducts suspended by hangers 12 inches or less in length from the top of the duct to the bottom of the support for the hanger.

d. Seismic restraint provisions. Seismic restraints that are required for piping by paragraphs 12-7b and 12–7c will be designed in accordance with the following provisions.

(1) *General. The* provisions of this paragraph apply to the following

(a) Risers. All risers and riser connections. See appendix E for a design example of a water riser.

(b) Horizontal pipe. All horizontal pipes and attached valves. For the seismic analysis of horizontal pipes, the equivalent static force will be considered to act concurrently with the full dead load of the pipe, including contents.

(c) *connections.* All connections and bracets for pipe will be designed to resist concurrent dead and equivalent static forces. The seismic forces will be determined from the appropriate provisions below. Supports will be provided at all pipe joints unless continuity is maintained. See paragraph (4) below for acceptable sway bracing details.

(d) Flexible couplings and expansion joints. Flexible couplings will be provided at the bottoms of risers for pipes larger than 3½ inches in diameter. Flexible couplings and expansion joints will be braced laterally unless such lateral bracing will interfere with the action of the flexible coupling or expansion joint. When pipes enter buildings, flexible couplings will be provided to allow for relative movement between soil and building.

(e) *Spreaders.* Spreaders will be provided at appropriate intervals to separate adjacent pipe lines unless the pipe spans and the clear distance between pipes are sufficient to prevent contact between the pipes during an earthquake.

(2) *Rigid and rigidly attached piping systems.* Rigid and rigidly attached pipes will be designed in accordance with paragraph 12–3. The equivalent static lateral force is given by $F_P = ZI_PC_PW_P$ (SEAOC eq 1-10), where C_P is equal to 0.75 and W_P is the weight of the pipes, the contents of the pipes, and the attachments. The forces will be distributed in proportion to the weight of the pipes, contents, and attachments. A piping system is assumed rigid if the maximum period of vibration is 0.05 second (for pipes that are not rigid see para (3) below). Figures 12-4, 12-5, and 12-6, which are based on water-filled pipes with periods equal to 0.05 second, are to be used to determine the allowable span-diameter relationship for Zones 1, 2, 3, and 4 for standard (40S) pipe; extra strong (80S) pipe; Types K, L, and M copper tubing and 85 red brass or SPS copper pipe.

(3) *Flexible piping systems.* Piping systems that are not in accordance with the rigidity requirements of paragraph 12–7c(2) (i.e., period less than 0.05 second) will be considered to be flexible (i.e., period greater than 0.05 second). Flexible piping systems will be designed for seismic forces with consideration given to both the dynamic properties of the piping system and the building or structure in which it is placed. In lieu of a more detailed analysis, the equivalent static lateral force is given by $F = ZI_PA_PC_PW_P$ (eq 12-2), where $A_P = 5.0$, $C_P = 0.75$, and W_P is the weight of the pipes, the contents of the pipes, and the attachments. The forces will be distributed in proportion to the weight of the pipes, contents, and attachments. Figure 12–7 may be used to determine maximum spans between lateral supports for flexible piping systems. The values are based on Zone 4 water-filled pipes with no attachments. If the weight of the attachments is greater than 10

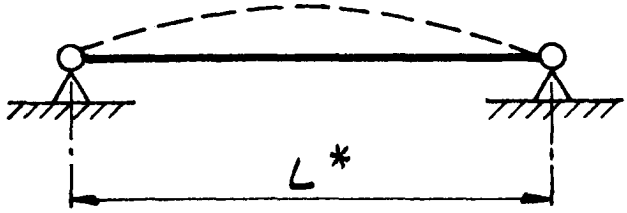

DIAMETER INCHES	STD. WT. STEEL PIPE 40 S	EX. STRONG STEEL PIPE 80 S	COPPER TUBE TYPE K	COPPER TUBE TYPE L	COPPER TUBE TYPE M	85 RED BRASS & SPS COPPER PIPE
1	6'-6"	6'-6"	5'-0"	4'-9"	4'-6"	5'-6"
1½	7'-6"	7'-9"	5'-9"	5'-6"	5'-6"	6'-6"
2	8'-6"	8'-6"	6'-6"	6'-6"	6'-3"	7'-0"
2½	9'-3"	9'-6"	7'-3"	7'-0"	7'-0"	8'-0"
3	10'-3"	10'-6"	7'-9"	7'-6"	7'-6"	8'-9"
3½	11'-0"	11'-0"	8'-3"	8'-3"	8'-0"	9'-3"
4	11'-6"	11'-9"	9'-0"	8'-9"	8'-6"	9'-9"
5	12'-9"	13'-0"	10'-0"	9'-6"	9'-6"	10'-9"
6	13'-9"	14'-0"	10'-9"	10'-6"	10'-3"	11'-6"
8	15'-6"	16'-0"				
10	17'-0"	17'-6"				
12	18'-3"	19'-0"				

* MAXIMUM UNSUPPORTED OR UNBRACED LENGTHS (L) ARE BASED ON WATER-FILLED PIPES WITH PERIOD (T_a) EQUAL TO 0.05 SEC. WHERE

$L^2 = 0.50\pi T_a \sqrt{EIg/w}$

E = MODULUS OF ELASTICITY OF PIPE

I = MOMENT OF INERTIA OF PIPE

w = WEIGHT PER UNIT LENGTH OF PIPE AND WATER

Figure 12-4. Maximum span for rigid pipe pinned-pinned

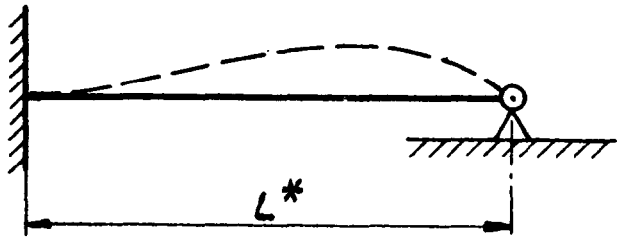

DIAMETER INCHES	STD. WT. STEEL PIPE 40S	EX. STRONG STEEL PIPE 80S	COPPER TUBE TYPE K	COPPER TUBE TYPE L	COPPER TUBE TYPE M	85 RED BRASS & SPS COPPER PIPE
1	8'-0"	8'-0"	6'-0"	6'-0"	5'-9"	6'-9"
1½	9'-6"	9'-6"	7'-3"	7'-0"	7'-0"	8'-0"
2	10'-6"	10'-9"	8'-0"	8'-0"	8'-9"	9'-0"
2½	11'-9"	11'-9"	9'-0"	8'-9"	8'-6"	9'-9"
3	12'-9"	13'-0"	9'-9"	9'-6"	9'-3"	10'-9"
3½	13'-6"	14'-0"	10'-6"	10'-3"	10'-0"	11'-6"
4	14'-6"	14'-9"	11'-0"	11'-0"	10'-9"	12'-3"
5	16'-0"	16'-3"	12'-3"	12'-0"	11'-9"	13'-3"
6	17'-0"	17'-9"	13'-6"	13'-0"	12'-9"	14'-3"
8	19'-3"	20'-0"				
10	21'-3"	22'-0"				
12	23'-0"	23'-6"				

* MAXIMUM UNSUPPORTED OR UNBRACED LENGTHS (L) ARE BASED ON WATER-FILLED PIPES WITH PERIOD (T_a) EQUAL TO 0.05 SEC. WHERE

$$L^2 = 0.78\pi T \sqrt{EIg/w}$$

SEE FIGURE 12-4 FOR NOTATIONS

Figure 12-5. Maximum span for rigid pipe fixed-fixed.

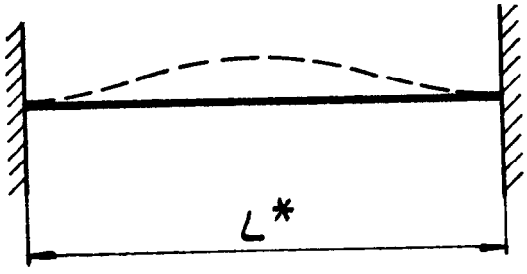

DIAMETER INCHES	STD. WT. STEEL PIPE 40S	EX. STRONG STEEL PIPE 80S	COPPER TUBE TYPE K	COPPER TUBE TYPE L	COPPER TUBE TYPE M	85 RED BRASS & SPS COPPER PIPE
1	9'-6"	9'-6"	7'-3"	7'-3"	7'-0"	8'-0"
1½	11'-6"	11'-6"	8'-6"	8'-6"	8'-3"	9'-9"
2	12'-9"	13'-0"	9'-9"	9'-6"	9'-6"	10'-9"
2½	14'-0"	14'-3"	10'-9"	10'-6"	10'-6"	11'-9"
3	15'-6"	15'-9"	11'-9"	11'-6"	11'-3"	13'-0"
3½	16'-6"	16'-9"	12'-6"	12'-3"	12'-0"	14'-0"
4	17'-3"	17'-9"	13'-6"	13'-0"	13'-0"	14'-9"
5	19'-0"	19'-6"	15'-0"	14'-6"	14'-3"	16'-0"
6	20'-9"	21'-3"	16'-3"	15'-9"	15'-6"	17'-3"
8	23'-3"	24'-3"				
10	25'-9"	26'-6"				
12	27'-6"	28'-6"				

* MAXIMUM UNSUPPORTED OR UNBRACED LENGTHS (L) ARE BASED ON WATER-FILLED PIPES WITH PERIOD (T_a) EQUAL TO 0.05 SEC. WHERE

$$L^2 = 1.125\pi T_a \sqrt{EIg/w}$$

SEE FIGURE 12-4 FOR NOTATIONS

Figure 12-6. Maximum span for rigid pipe fixed-fixed.

percent of the weight of the pipe, the attachments will be separately braced, or substantiating calculations will be required. Temperature stresses have not been considered in figure 12-7. If temperature stresses are appreciable, substantiating calculations will be required.

(a) Use of figure 12-7. The maximum spans and design forces were developed for $ZI_pA_pC_p = 1.50$. For lower $ZI_pA_pC_p$ values, the spans and forces may be adjusted by the values in table 12-2.

(b) *Separation between pipes.* Separation will be a minimum of four times the calculated maximum displacement due to F_p, but not less than 4 inches clear between parallel pipes, unless spreaders are provided (para 12-7c(l)(e)).

(c) Clearance. Clearance from walls or rigid elements will be a minimum of three times the calculated displacement due to F_p, but not less than 3 inches clear from rigid elements.

(4) Alternative method for flexible piping systems. If the provisions in the above paragraphs appear to be too severe for an economical design, alternative methods based on the rationale described in paragraph 12-4 and paragraph 12-8 may be applied to flexible piping systems.

Diameter (in.)	Std. Wgt. Steel Pipe - 40S		Ex. Strong Steel Pipe - 80S		Copper Tube Type L	
	L * (f t)			F+(lbs)	L*(ft)	F+(lbs)
1	22			80	11	17
1-1/2	25	140	26	180	12	35
2	29	220	30	290	14	70
2-1/2	32	380	33	460	15	110
3	34	550	35	710	17	150
3-1/2	36	730	38	930	18	220
4	39	960	40	1,200	19	300
5	41	1,440	44	1,900	20	470
6	45	2,120	46	2,750	22	730
8	49	3,740	54	5,150	26	1,550
10	54	6,080	59	7,670	28	2,620
12	58	8,560	61	10,350	31	3,950

***Maximum spans (L) between lateral supports of flexible piping are based on the resultant of an assumed loading of 1.5 w ($ZI_pA_pC_p = 1.5$) in the horizontal direction and 1.0 w (gravity) in the vertical direction. The resultant is 1.8 w.**

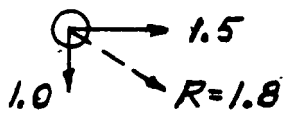

The assumed maximum stress is 20,000 p.s. i. for steel and 7,000 p.s. i. for copper. Simple spans (pinned-pinned) are assumed. The calculated maximum lateral displacements are 3.5 inches for steel ($E = 29 \times 10^6$ p.s. i.) and 0.6 inch for copper ($E = 15 \times 10^6$ p.s. i.).

+The horizontal force (F) on the brace is based on 1.5 w L for the maximum span. For shorter spans, $F_{design} = (L_{design}/L)F$.

Figure 12-7. Maximum span for flexible pipes in Seismic Zone 4.

Zone	L (feet)	F (pounds)	$ZI_pA_pC_p$
3	1.1	0.8	1.12
2B	1.20	0.6	0.75
2A	1.25	0.5	0.56
1	1.35	0.3	0.28

Table 12-2. Multiplication factors for figure 12-7 for Seismic Zones 1, 2, and 3 or@ cases where $ZI_pA_pC_p$ is not equal to 1.5.

(5) Acceptable seismic details for sway bracing. Acceptable details are shown in figure 12-8.

12-8. Stacks. Stacks are actually beams with distributed mass and, as such, cannot be approximated accurately by single-mass systems. The design criteria presented herein apply to either cantilever or singly guyed stacks. All stacks designed under the provisions of this paragraph must have a constant moment of inertia or must be approximated as having a *constant* moment of inertia. Stacks having a slightly varying moment of inertia will be treated as having a uniform moment of inertia with a value equal to the average moment of inertia.

a *Stacks on buildings.* Stacks that extend more than 15 feet above a rigid attachment to the building will be designed according to the criteria prescribed below. Stacks that extend less than 15 feet will be designed for the equivalent static lateral force prescribed in SEAOC equation 1-10, with $C_p = 2.00$ (see para 12-3).

(1) *Cantilever stacks.*

(a) The fundamental period of the stack will be determined from the period coefficient (i.e., C = 0.0909) provided in figure 12-9, unless actually computed.

(b) The equivalent static force will be distributed as an inverted triangle per unit length as shown in figure 12–10.

(c) The static force per unit length at the top of the stack will be determined from the following

$$f = 1.6ZI_pA_pC_pW \qquad \text{(eq 12-4)}$$

where

Z and I_p are defined in SEAOC lC

$C_p = 0.75$

A_p = amplification factor for coefficient C_p, determined in accordance with paragraph 12-4e

w = weight per unit length of stack

In no case will the product of A_pC_p be less than 2.0. The value $I_pA_pC_p$ need not exceed 3.75.

(2) Guyed *stacks. The* analysis of a guyed stack depends on the relative rigidities of the cantilever resistance and the guy wire support systems. If the wires are very flexible, the stack will respond in the manner of the fundamental mode of vibration of a cantilever (para (1) above). If the wires are very rigid, the stack will respond in a manner similar to the higher modes of vibration of a cantilever with periods and mode shapes similar to those shown in figure 12–9. The fundamental period of vibration of the guyed system will be somewhere between the values for the fundamental and the appropriate higher mode of a similar cantilever stack. An illustration for a single-guyed stack is shown in figure 12-11. The design of guyed stacks is beyond the scope of this manual.

b. Stacks on the ground. Where the stack foundations are in contact with the ground and the stack is not supported by the building, the stack will be designed as a non-building structure in accordance with SEAOC 11 and chapter 13.

c. Anchor *bolts.* Anchor bolts for moment resisting stack bases should be as long as possible. A great deal more strain energy can be absorbed with long anchor bolts than with short ones. The use of these long anchor bolts has been demonstrated to give stacks better earthquake performance. In some cases, a pipe sleeve is used in the upper portion of the anchor bolt to ensure a length of unbended bolt for strain energy absorption. When this type of detail is used, provisions will be made for shear transfer (e.g., shear keys). The use of two nuts on anchor bolts is also recommended to provide an additional factor of safety.

12-9. Bridge cranes and monorails. In addition to the normal horizontal loads prescribed by the various other applicable government criteria, the design of bridge cranes and monorails will also include an investigation of lateral seismic forces and deformations as set forth in this paragraph.

a. Equivalent static force. A lateral force equal to ZI_pC_p times the weight of the bridge crane or

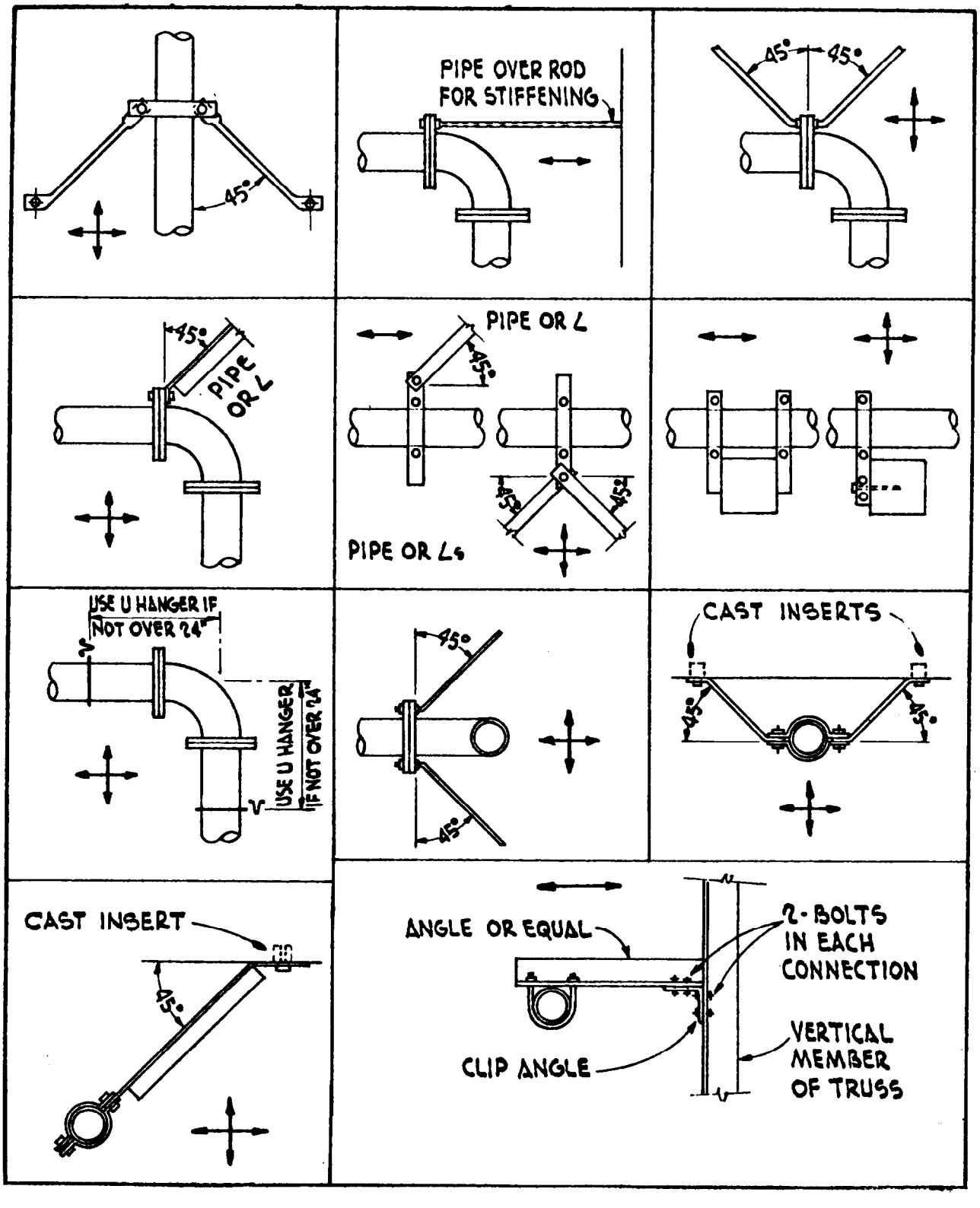

Figure 12-8. Acceptable seismic details for sway bracing.

monorail will be statically applied at the center of gravity of the equipment. This equivalent static force will be considered to be applied in any direction. C_p will be equal to 1.50.

b. Weight of equipment. The weight of such equipment, W_p, need not include any live load, and the equivalent static force so computed will be assumed to act nonconcurrently with other prescribed nonseismic horizontal forces when considering the design of the crane and monorails, When

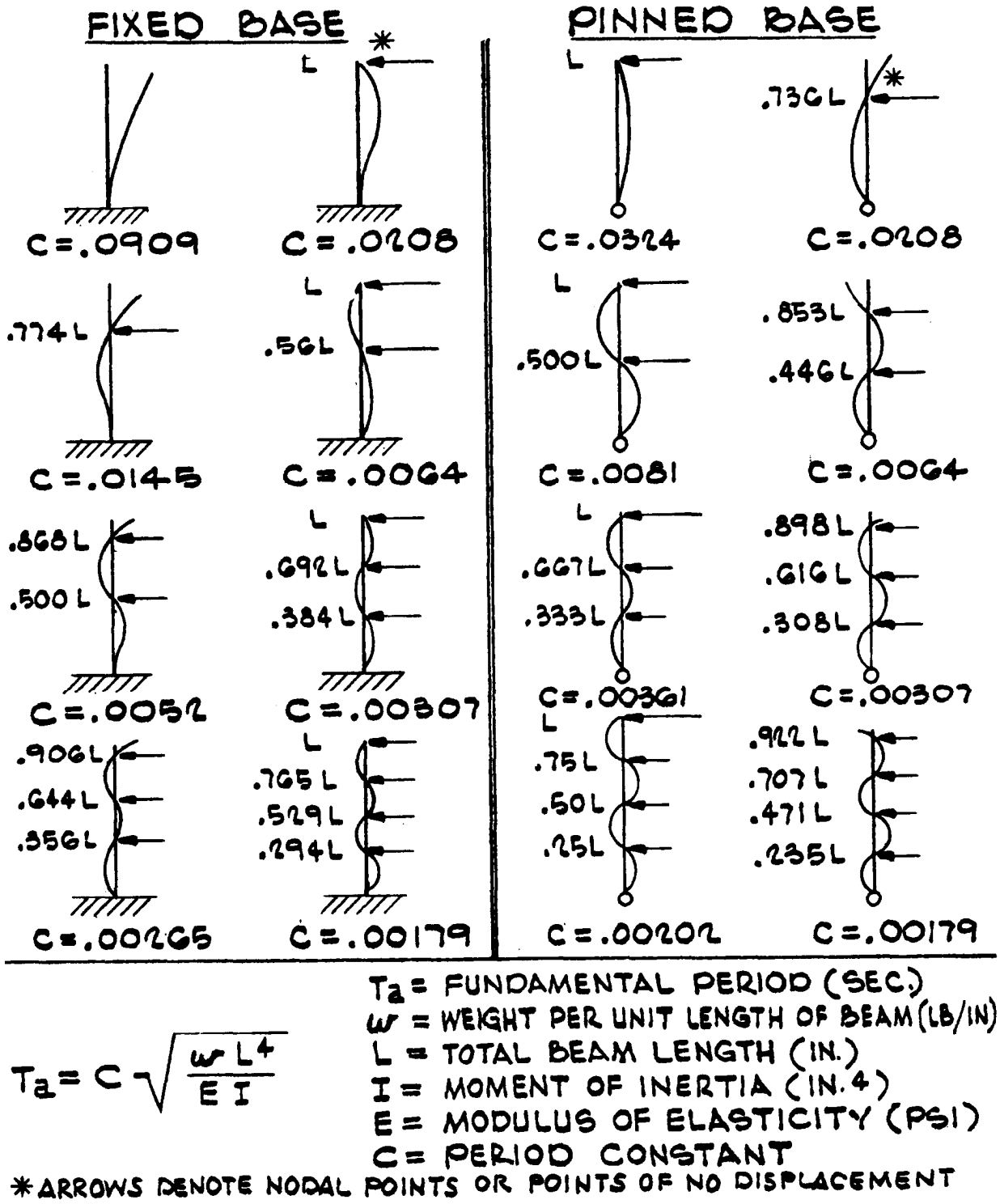

Figure 12–9. Period coefficients for uniform beams.

considering the design of the building, the weight of the equipment will be included with the weight of the building.

12-10. Elevators. Power-cable-driven elevators and hydraulic elevators with lifts over 5 feet will be designed for lateral forces set forth in this chapter.

a. Elements of the elevator support system. All elements that are part of the elevator support system, such as the car and counterweight frames, guides, guide rails, supporting brackets and fiaming, driving machinery, operating devices, and control equipment, will be investigated for the prescribed lateral seismic forces. See figure 12-12.

b. Equivalent static forces. The lateral seismic

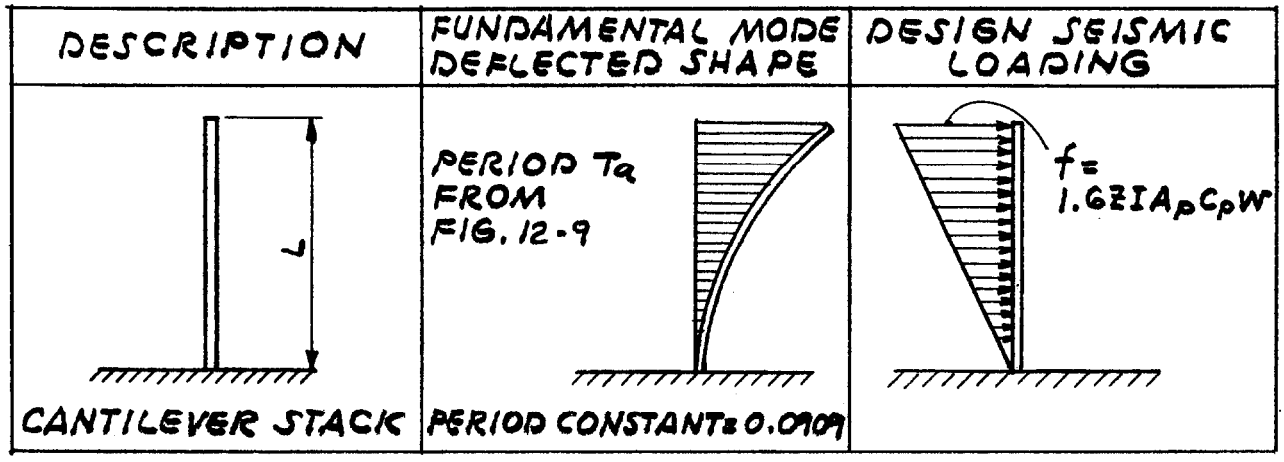

Figure 12–10. Seismic loading on cantilever stack.

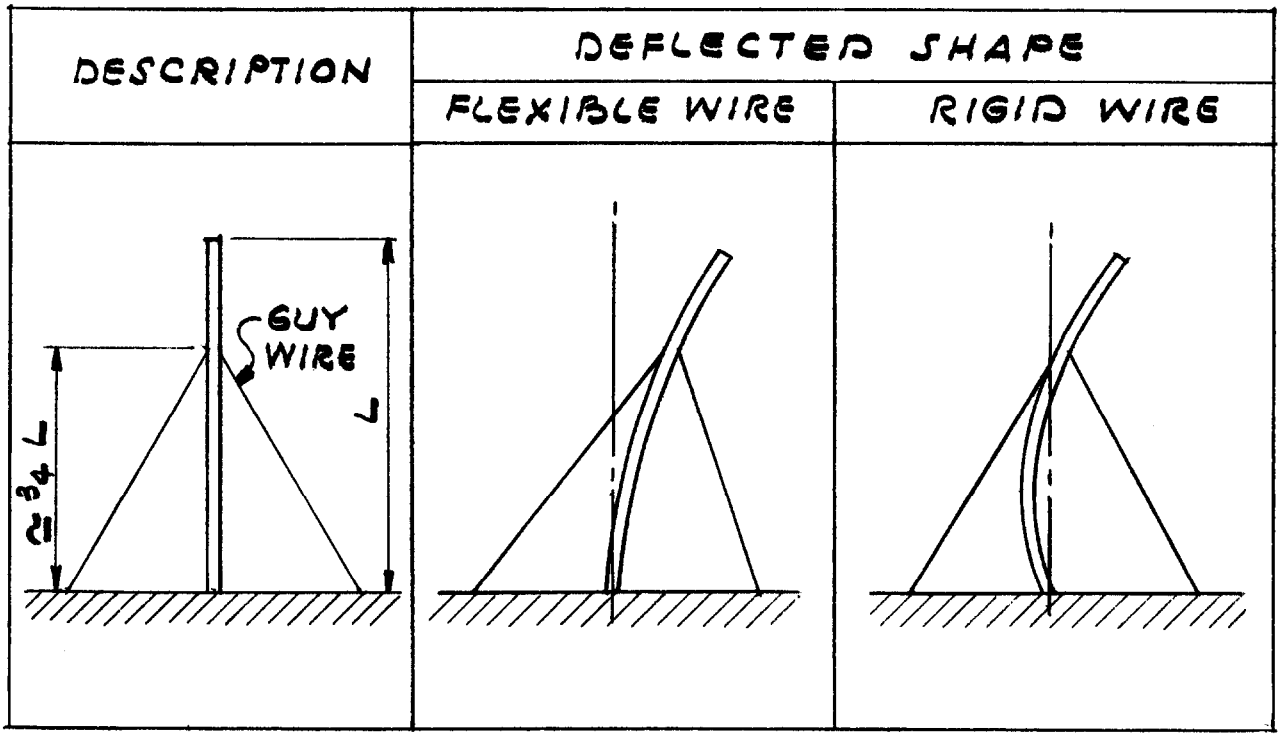

Figure 12-11. Single-guyed stack.

forces will conform to the applicable provisions of paragraphs 12-3 and 12-4 and SEAOC 1E4.

(1) The car and counterweight frames, roller guide assembly, retainer plates, guide rails, and supporting brackets and framing will be designed for $F_p = ZI_pC_pW_p$ (SEAOC eq 1-10) where W_p for the elevator cars is the weight of the car plus 0.4 times its rated load and $C_p = 0.75$. The lateral forces acting on the guide rails will be assumed to be distributed one-third to the top guide rollers and two-thirds to the bottom guide rollers of elevator cars and counterweights. The elevator car and/or counterweight will be assumed to be located at its most adverse position in relation to the guide rails and support brackets. Horizontal deflections of guide rails will not exceed ½ inch between supports, and horizontal deflections of the brackets will not exceed ¼ inch.

(a) In Seismic Zones 3 and 4, a retainer plate (auxiliary guide plate) will be provided at top and bottom of both car and counterweight. The clearances between the machined faces of the rail and the retainer plate will not be more than 3/16 inch, and the engagement of the rail will not be less than the dimension of the machined side face of the rail. When a car safety device attached to the lower members of the car frame complies with

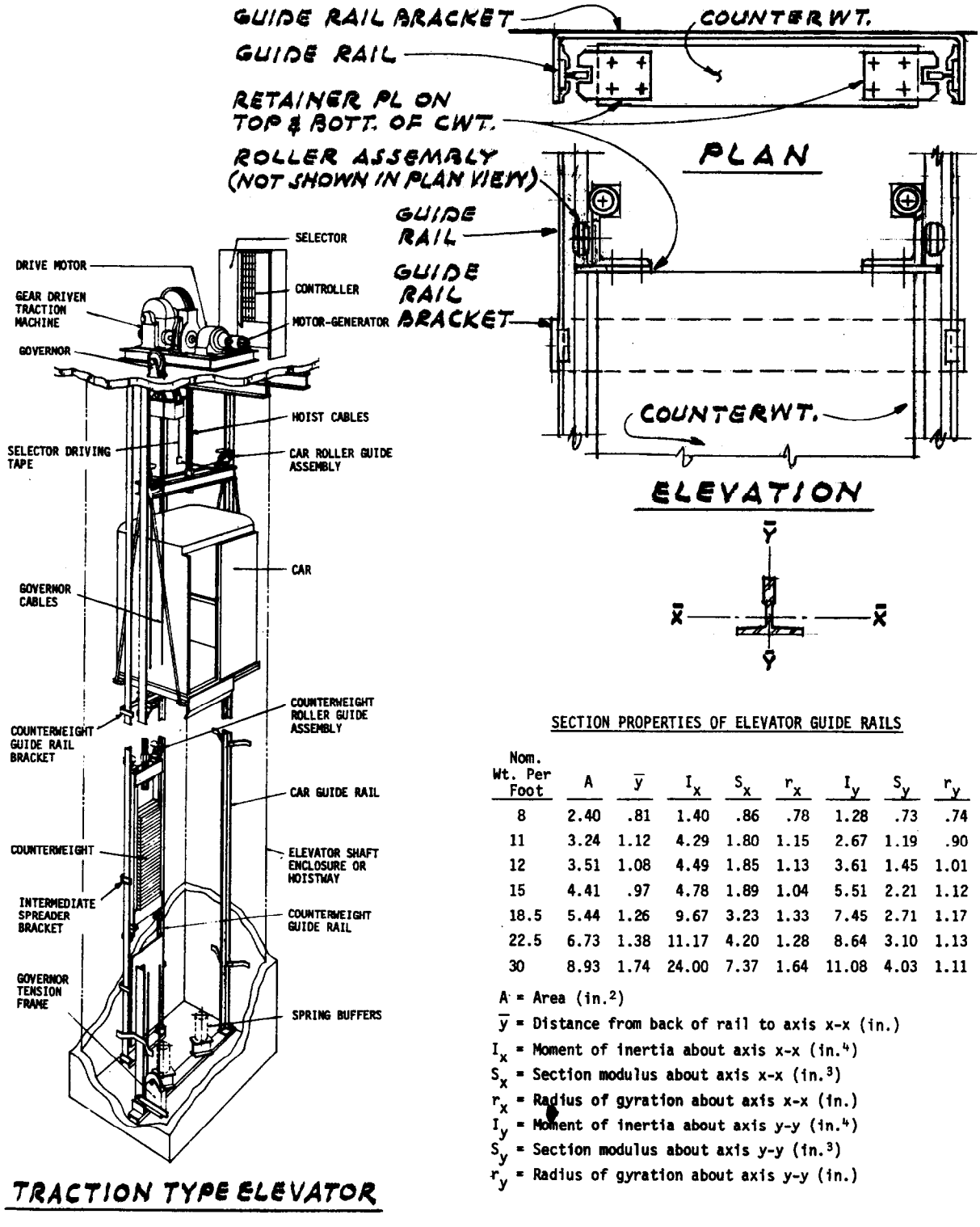

SECTION PROPERTIES OF ELEVATOR GUIDE RAILS

Nom. Wt. Per Foot	A	$\bar{y}$	I_x	S_x	r_x	I_y	S_y	r_y
8	2.40	.81	1.40	.86	.78	1.28	.73	.74
11	3.24	1.12	4.29	1.80	1.15	2.67	1.19	.90
12	3.51	1.08	4.49	1.85	1.13	3.61	1.45	1.01
15	4.41	.97	4.78	1.89	1.04	5.51	2.21	1.12
18.5	5.44	1.26	9.67	3.23	1.33	7.45	2.71	1.17
22.5	6.73	1.38	11.17	4.20	1.28	8.64	3.10	1.13
30	8.93	1.74	24.00	7.37	1.64	11.08	4.03	1.11

A = Area (in.^{2})
$\bar{y}$ = Distance from back of rail to axis x-x (in.)
I_x = Moment of inertia about axis x-x (in.^{4})
S_x = Section modulus about axis x-x (in.^{3})
r_x = Radius of gyration about axis x-x (in.)
I_y = Moment of inertia about axis y-y (in.^{4})
S_y = Section modulus about axis y-y (in.^{3})
r_y = Radius of gyration about axis y-y (in.)

Figure 12-12. Elevator details.

the lateral restraint requirements, a retainer plate is not required for the bottom of the car.

(b) In Seismic Zones 3 and 4, the maximum spacing of the counterweight rail tie brackets tied to the building structure will not exceed 16 feet. An intermediate spreader bracket, not required to be tied to the building structure, will be provided for tie brackets spaced greater than 10 feet, and two intermediate spreader brackets are required for tie brackets spaced greater than 14 feet.

(2) Machinery and equipment will be designed for $C_p = 0.75$ in equation 3-10 when rigid and

rigidly attached. Nonrigid or flexibly mounted equipment will be designed in accordance with paragraph 12-4.

12-11. Typical details for securing equipment. See figures 12-13 and 12-14 for examples of seismic restraints for equipment.

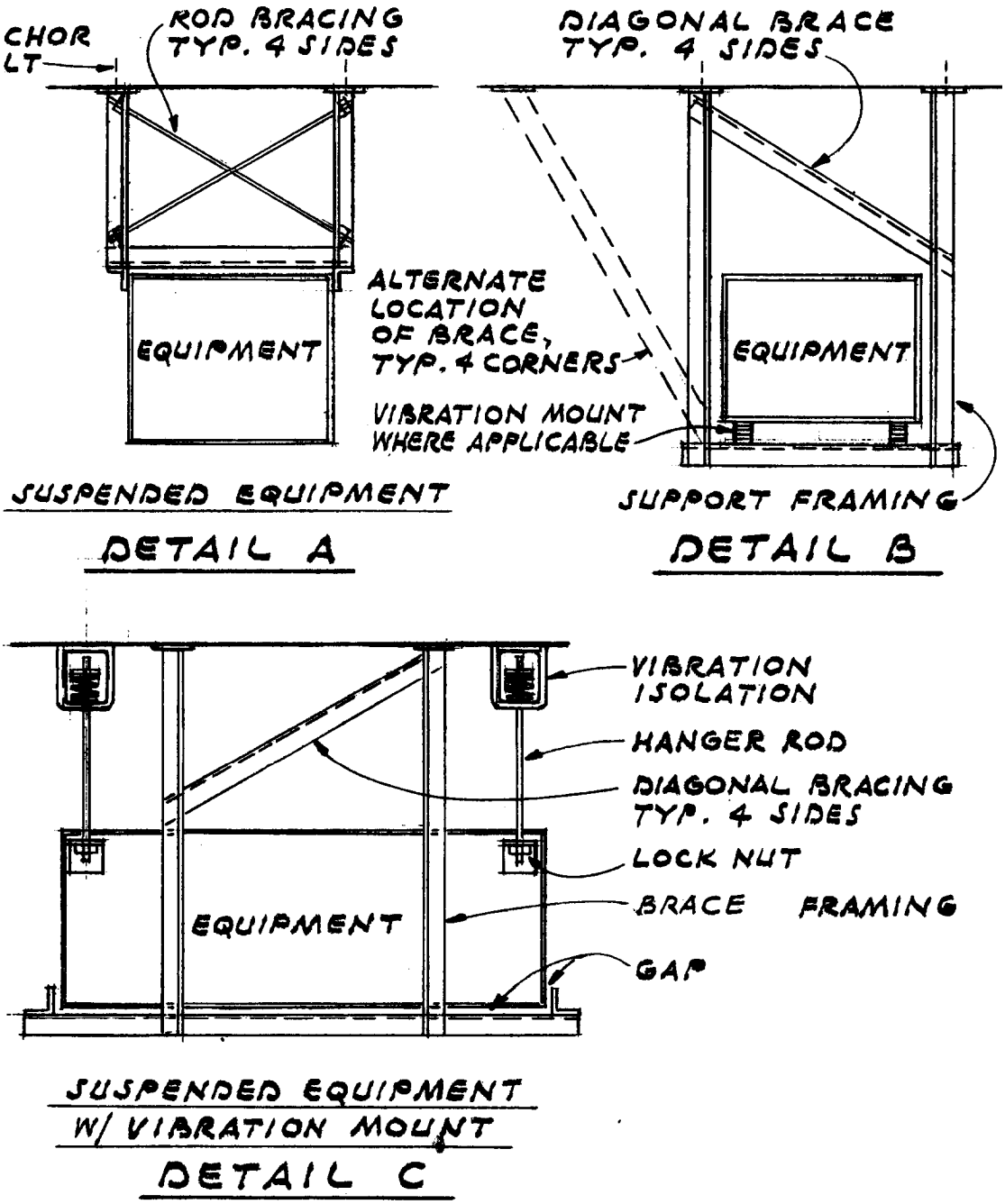

Figure 12–13. Typical seismic restraint of hanging equipment.

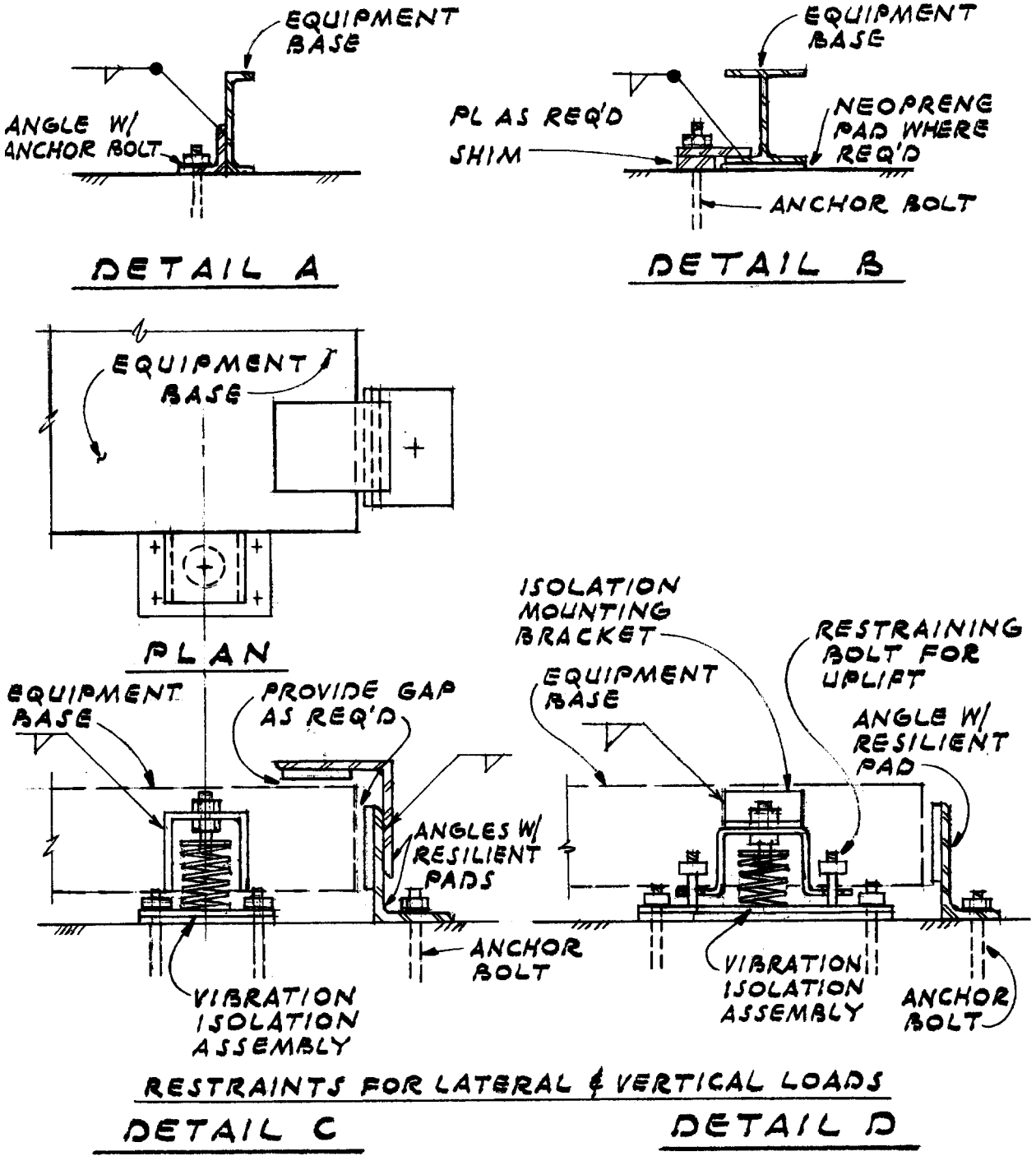

Figure 12–14. Typical seismic restraint of floor-mounted equipment.

CHAPTER 13

NONBUILDING STRUCTURES

13-1. Introduction. This chapter prescribes the seismic design criteria for ground located structures, other than buildings. The design will be based on SEAOC 11 and SEAOC Table l-I. Refer to chapter 12 for seismic design criteria for equipment. In some cases, equipment on the ground qualifies under this chapter.

13-2. General. Structures other than buildings are designed to resist seismic lateral forces determined in accordance with $V = (ZIC/R_w)W$ (SEAOC eq l–l), where R_w ranges from 3 to 5 as shown in SEAOC Table 11. Examples for obtaining the forces are in appendix F. SEAOC also includes a special equation for rigid structures (V = 0.5 ZIW when T is less than 0.06) and a minimum value of 0.5 for C/R_w. The period will be determined by SEAOC Method B.

13-3. Elevated tanks and other inverted pendulum structures. Structures that represent inverted pendulums, such as an elevated tank supported by a tower structure that is light in weight relative to the tank and contents, will use the basic formula $V = (ZIC/R_w)W$ with the value of& equal to 3. The value for W will include the effective weight of the contents. The accidental torsion will be computed as for buildings. Stresses will be computed for the earthquake forces in any horizontal direction.

a. Elevated tanks on cross-braced columns. Foundation piers will be interconnected by steel or reinforced concrete struts. When supported by piles or caissons, diagonal struts will also be required. For most four-legged tanks, uplift and column design is critical when the horizontal force is applied at 45 degrees to the major axes. Figure F-1 in appendix F illustrates the method of obtaining the seismic forces on a four-legged water tank, including a method for computing the period of vibration required to determine the value of C.

b. Hydrodynamic effects. In general, W will include the total weight of the contents of an elevated tank. However, properly substantiated procedures that account for the reduction of the effective weight of the liquid due to sloshing may be used. Such procedures usually result in a mathematical model that represents a two-degree-of-freedom system consisting of an effective rigid mass of liquid and an effective sloshing mass of liquid. The procedure is similar to that used for vertical tanks on the ground. In addition to designing the tower to resist the equivalent static seismic forces, the effects of the sloshing liquid on the interior of the tank will be considered.

c *Elevated tanks, pedestal-type.* Pedestal-type elevated water tanks will not be permitted is Seismic Zones 3 and 4. In Seismic Zones 1 and 2, R_w will be equal to 3.

13-4. Vertical tanks (on ground). The basic formula $V = (ZIC/R_w)W$ will be used for tanks in which the liquid is rigidly contained (i.e., sloshing is prevented), for tanks holding highly viscous materials, and for pressure tanks. The value of R_w is equal to 4.0 (SEAOC Table l-H), W is the weight plus contents, and C is equal to 2.75 unless it can be substantiated that the period T is greater than 0.3 second. For tanks where the liquid is not rigidly contained, the hydrodynamic effects of the sloshing liquid may be considered in order to reduce the effective mass and determine the effective centroid of the liquid.

a. Hydrodynamic effects. During an earthquake there is a complex redistribution of pressures in a tank. The design procedure for considering these hydrodynamic effects is based on a simplified procedure described in technical publications and modified herein. The effective force distribution is illustrated in figure 13–1. The liquid is divided into a constrained portion and an in-motion portion. (If h is less than 1.5R, there is no constrained liquid.) Part of the in-motion liquid, combined with the constrained liquid, forms the effective mass of the impulsive force P_I ($P_1 + P_2 = P_I$). The remaining portion of in-motion liquid forms the mass for the convective force P_C. P_I and P_c are the resultant forces of the horizontal pressures on the sides of the tank. P_I represents the force of the effective mass of liquid that moves rigidly with the tank, and P_C represents the force of the effective mass of the sloshing liquid. In addition to P_I and P_C, there is a vertical couple, M_b, acting on the bottom of the tank due to the unbalanced vertical pressures (P_b). Bending and overturning moments are determined by multiplying P_I and P_C by the effective heights h_I and h_c, respectively. In order to include the effects of M_b below the tank base, modified effective heights, h'_I and h'_c are given.

(1) *Rigid body forces. The* rigid body forces (fig 13-2) include the seismic forces due to the impulsive liquid, the walls of the tank, and the roof. The term *rigid body* is used to denote the impulsive liquid moving rigidly with the tank. Actually, the tank does have some flexibility depending on the

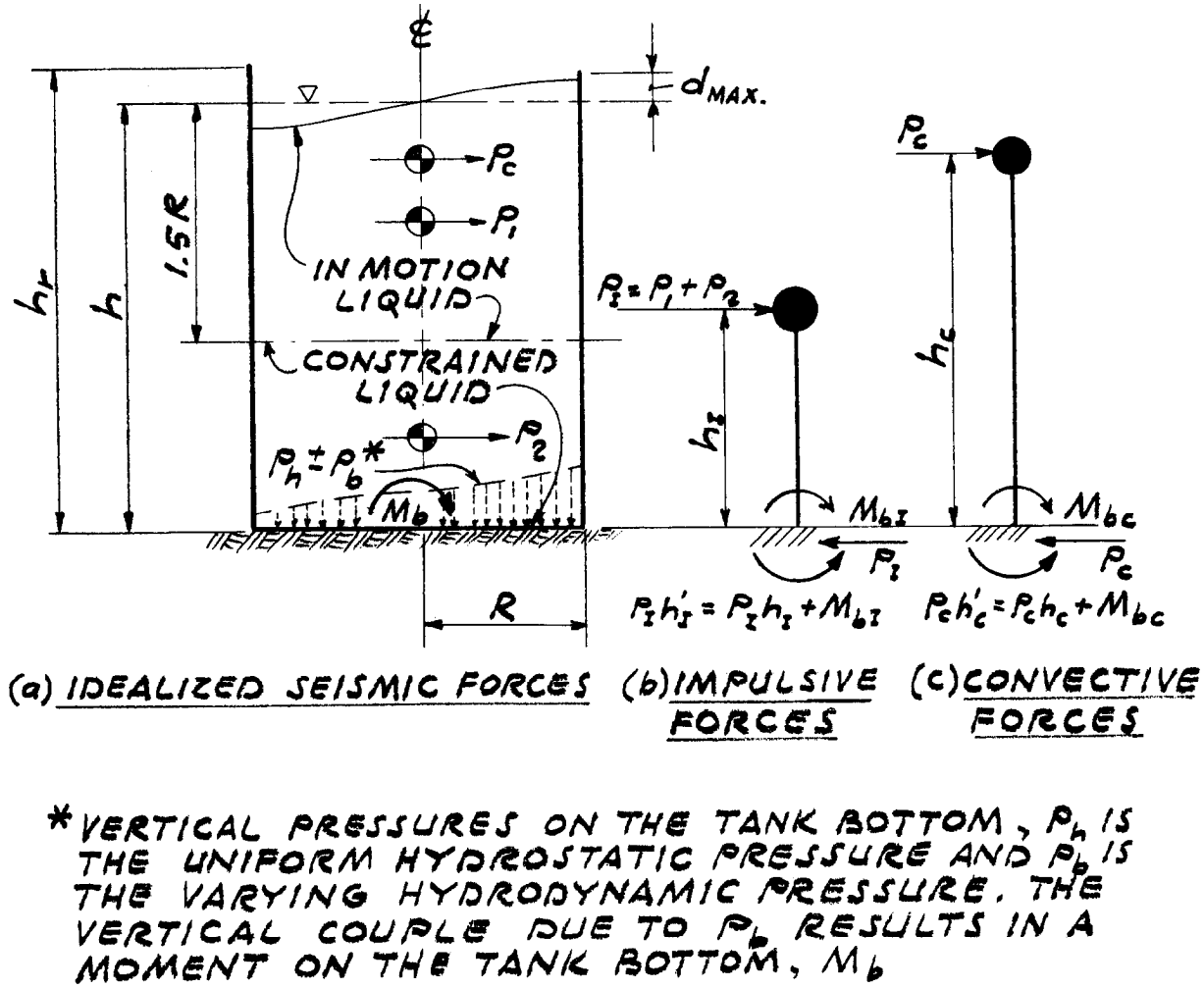

Figure 13-1. Effective liquid force distribution.

size and shape. For calculating C it will be assumed that the period of the tank and contents is less than 0.3 second unless substantiated to be longer.

(a) The total horizontal rigid body force, V_{RB}, will be determined by the equation

$$V_{RB} = (ZIC/R_W)\ (W_r + W_W + W_I) \qquad \text{(eq 13-1)}$$

where Z and I are prescribed in chapter 3, R_W equals 4.0, and C equals 2.75 unless a lower value is substantiated. W, is the weight of the roof (if any), W_W is the weight of the tank walls, and W_I is the weight of the impulsive liquid. W_I is determined from the effective weight ratio, W_I/W, in figure 13-3 or table 13-1, where W is the total weight of the liquid.

(b) The moments at the base of the tank are determined by the equation

$$M_{RB} = (ZIC/R_W)\ (W_r h_r + W_W h_W + W_I h_I) \qquad \text{(eq 13-2)}$$

where h, is the height of the roof, h_W is the height to the center of mass of the tank walls, and h_I is the effective height of the impulsive liquid. h_I is determined from the effective height ratio hi/h in figure 13-3(b) or table 13-2, where h is the height of the water level (at rest). To calculate stresses in the tank wall, where M_b is not effective, use h_I. Below the tank base, where M_b is effective, use h'_I.

(2) Sloshing liquid forces (fig 13-2).

(a) The sloshing liquid forces V_{SL} are equal to the convective force, P_C, and will be determined by the equation

$$V_{SL} = (ZIC/R_W)\, W_C \qquad \text{(eq 13-3)}$$

where Z, I, and R_W are the same as used in equation 13–1. C is dependent on the sloshing period T and the site coefficient S (SEAOC Table 1B). W_c, the weight of the convective liquid, is determined from the effective weight ratio, W_c/W, in figure 13–3 or table 13–1, where W is the total weight of the liquid.

(b) The sloshing period is determined by the equation

$$T = k_T\sqrt{h} \qquad \text{(eq 13-4)}$$

where k_T is determined from figure 13-4 or table 13-3.

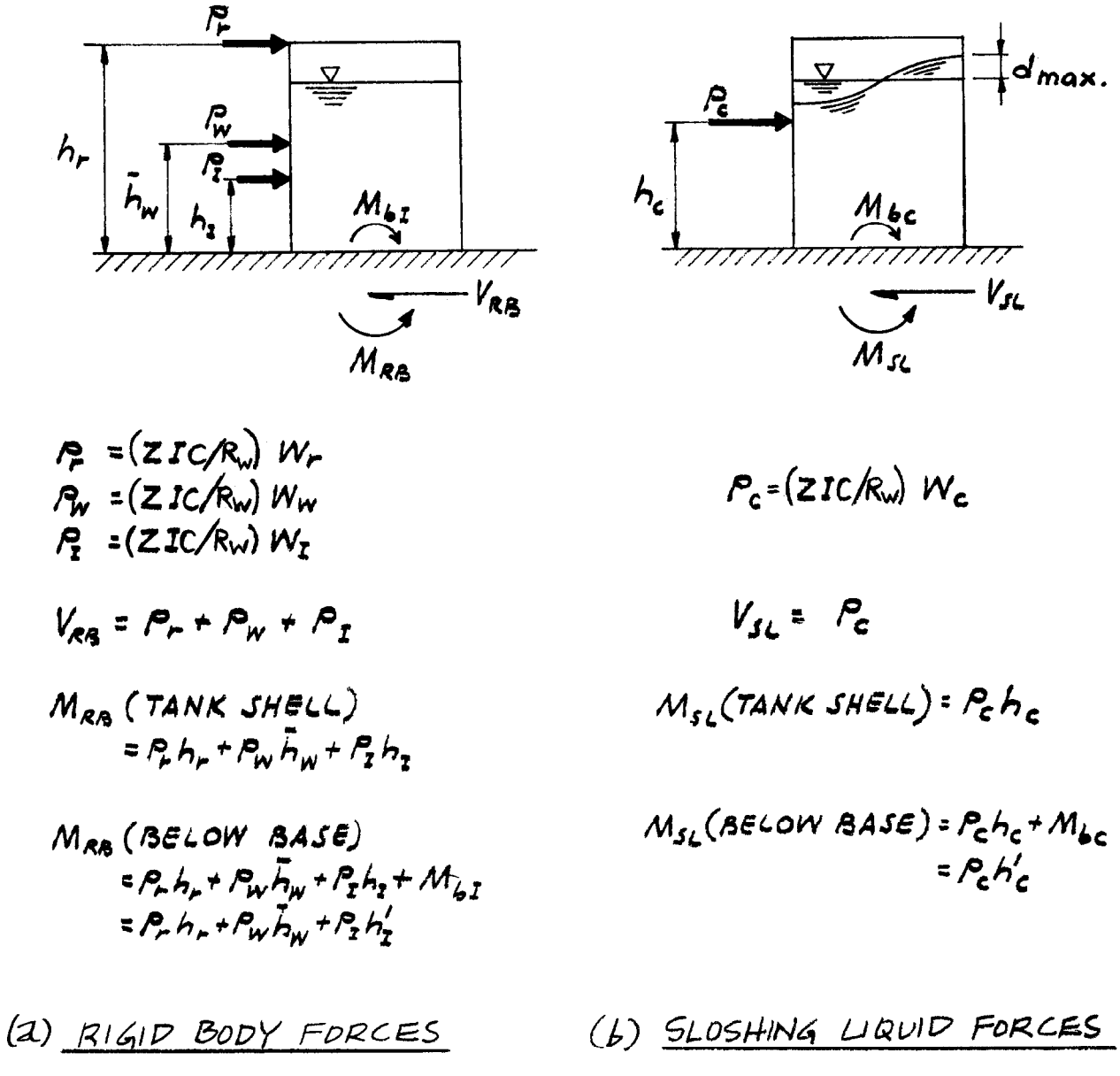

Figure 13–2. Rigid body and sloshing liquid forces.

(c) The moments at the base of the tank are determined by the equation

$$M_{SL} = (ZIC/R_W)W_c h_c \qquad \text{(eq 13-5)}$$

where h_c is the effective height of the convective liquid; h_c is determined from the effective height ratio h_c/h (fig 13–3(b) or table 13–2), where h is the height of the water level (at rest). To calculate stresses in the tank wall, where Mb is not effective, use h_c. Below the tank base, where Mb is effective, use h'_c.

(d) The maximum design height of the sloshing wave is determined for cylindrical tanks from the equation

$$d_{max} = \frac{0.75(ZIC/R_W)R}{1 - k_d ZIC/R_W)} \qquad \text{(eq 13-6)}$$

and for rectangular tanks from the equation

$$d_{max} = \frac{0.833(ZIC/R_W)R}{1 - k_d(ZIC/R_W)} \qquad \text{(eq 13-7)}$$

where k_d is obtained from figure 13–5 or table 13-4. R is the radius of a cylindrical tank or one-half the plan dimension of a rectangular tank.

(3) Combining the rigid body forces and the sloshing liquid forces. The rigid body forces and the sloshing forces will be combined by the square root of the sum of the squares, as shown in the equations

$$V_{total} = \sqrt{V^2_{RB} + V^2_{SL}} \qquad \text{(eq 13-8)}$$

and

$$M_{total} = \sqrt{M^2_{RB} + M^2_{SL}} \qquad \text{(eq 13-9)}$$

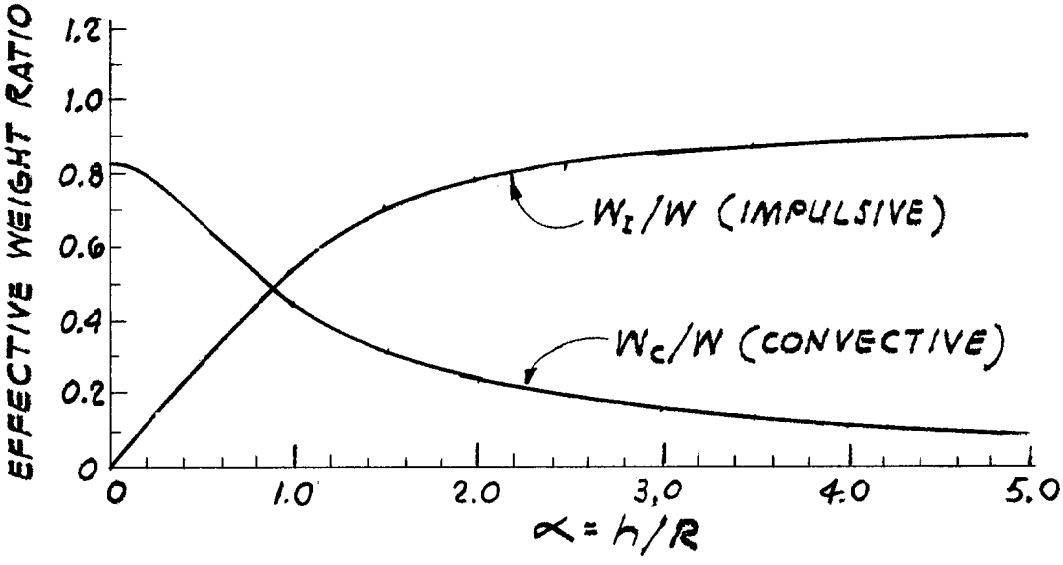

(a). Effective Weight Ratio (See Table 13-1)

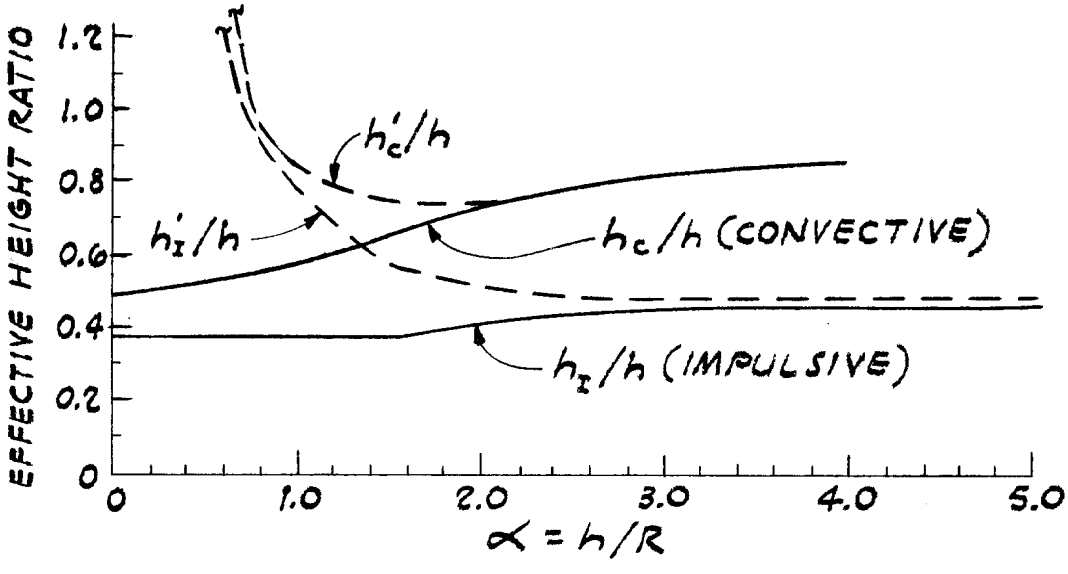

(b). Effective Height Ratio (See Table 13-2)

Figure 13-3. Effective weight and height ratios.

α		0.50	0.75	1.00	1.50	2.00	2.50	3.00	3.50	4.00	5.00
W_I/W, impulsive		0.29	0.42	0.54	0.71	0.79	0.83	0.86	0.88	0.89	0.91
W_C/W, convective	Cylindrical	0.66	0.53	0.43	0.30	0.23	0.18	0.15	0.13	0.11	0.09
	Rectangular	0.69	0.58	0.48	0.34	0.26	0.21	0.18	0.15	0.13	0.11
See Figure 13-3(a) for Plot											

Table 13-1. Effective weight ratio.

α		0.50	0.75	1.00	1.50	2.00	2.50	3.00	3.50	4.00	500
h_i/h, impulsive		0.38	0.38	0.38	0.38	0.41	0.42	0.44	0.45	0.45	0.46
h'_i/h, impulsive		1.60	1.00	0.80	0.58	0.51	0.49	0.48	0.48	0.47	0.47
h_c/h, convective	cylindrical	0.53	0.57	0.60	0.68	0,74	0.79	0.82	0.84	0.86	0.89
	rectangular	0.53	0.55	0.58	0.65	0.71	0.76	0.79	0.82	0.84	0.87
h'_c/h, convective	cylindrical	1.60	0.96	0.79	0.73	0.75	0.79	0.82	0.84	0.86	0.89
	rectangular	2.00	1.11	0.86	0.73	0.74	0.77	0.80	0.82	0.84	0.87
See Figure 13-3(b) for Plot											

Table 13-2. Effective height ratio.

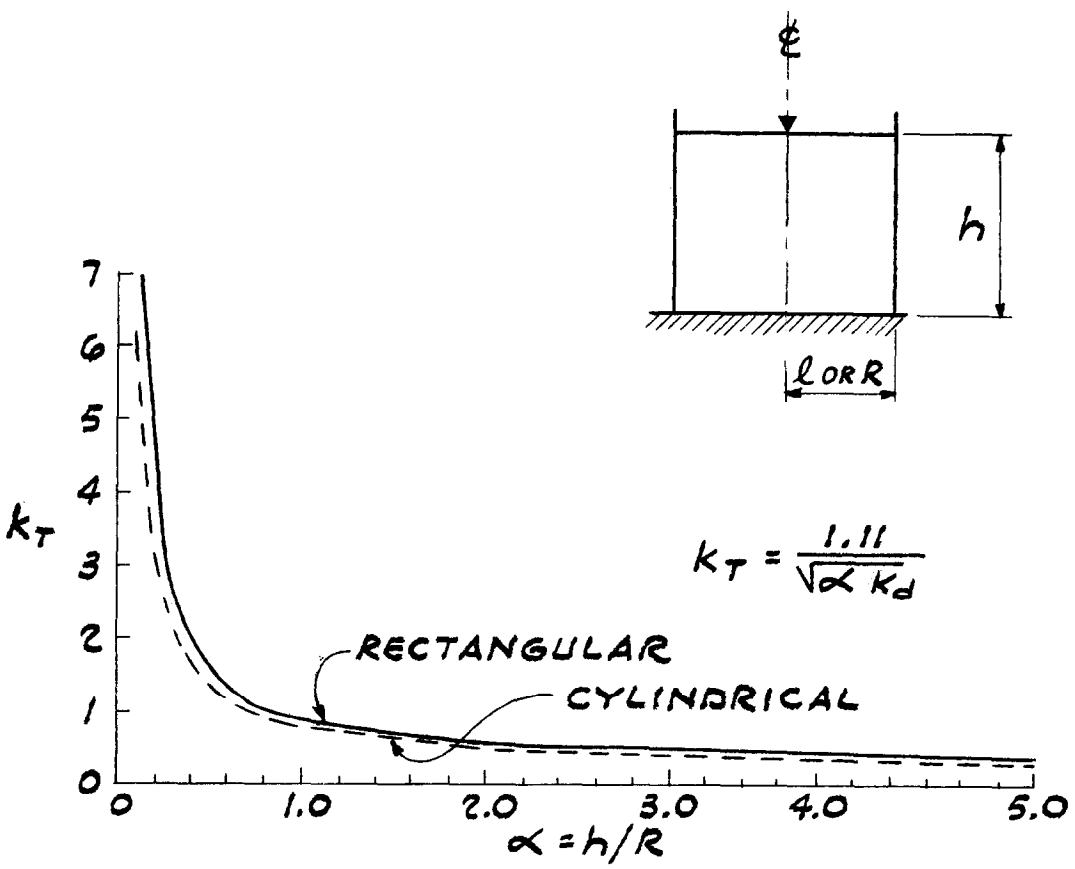

Figure 13-4. Period constant. k_T.

This is consistent with modal analysis procedures where spectral responses of the predominant modes are combined in such a manner.

(4) Sloshing wave height d_{max}. The value of d_{max} must be less than the freeboard height (h_r minus h) for the simplified hydrodynamic procedure to be valid. If d_{max} is greater than (h_r minus h), liquid will overflow the top of the tank when there is no roof or will be confined by the roof if a roof exists. When there are interior elements, such as baffles or roof supports, the effects of sloshing liquid on these elements will be considered.

b. *Design of tank.* The critical items of concern in the seismic design of the tank are the horizontal shear at the base, the overturning and uplift forces at foundations, the compression buckling of the tank shell, and, when tie-downs are used, the resulting additional stresses at the attachment of

	k_T*								
a	0.50	0.75	1.00	1.50	2.00	2.50	3.00	4.00	5.(K)
k_T, cylindrical	1.40	1.00	0.84	0.67	0.58	0.52	0.47	0.41	0.37
k_T, rectangular	1.50	1.10	0.92	0.73	0.63	0.56	0.51	0.44	0.39

*used for sloshing (convective motion) period T = $k_T\sqrt{h}$, where h is the height in feet.
See Figure 13-4 for Plot

Table 13–3. Period constant, k_t.

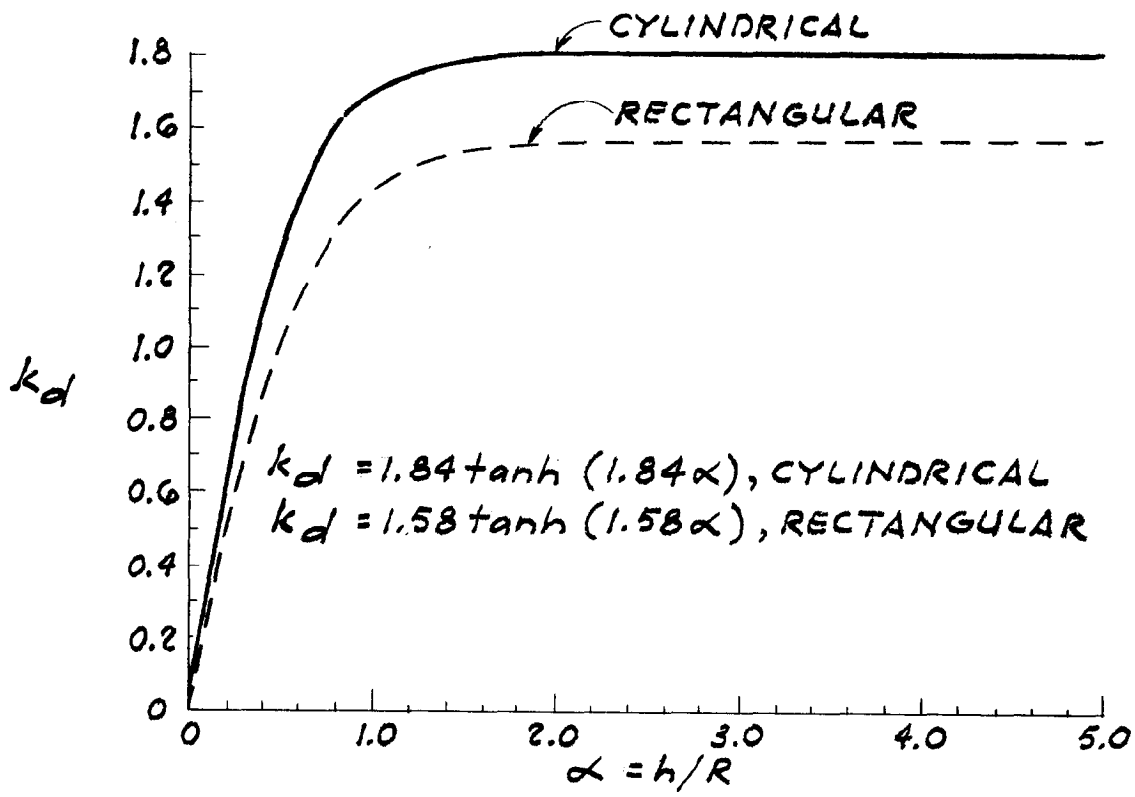

Figure 13–5. Coefficient k_d.

α	0.50	0.75	1.00	1.50	2.00	2.50	3.00	4.00	5.00
k_d, cylindrical	1.33	1.62	1.75	1.83	1.84	1.84	1.84	1.84	1.84
k_d, rectangular	1.04	1.31	1.45	1,55	1.57	1.58	1.58	1.58	1.58

See Figure 13-5 for Plot

Table 134. Coefficient k_d.

the anchors, which could tear the shell. The stresses resulting from the seismic forces will be combined with other applicable stresses. Procedures for the design of vertical tanks are beyond the scope of this manual. Industry standards (e.g., AWWA and API) have developed seismic criteria as supplements to general design criteria. Procedures used for the design of tanks will be substantiated by means of rational analysis, tests, or past experience.

13-5. Horizontal tanks (on ground). The basic formula $V = (ZIC/R_w)W$ will be used, with $R_w = 4$. The critical items of concern in the seismic design are the stresses in the saddles and in the base footing. The soil pressure in the transverse direction due to overturning may be critical. The resultant of forces must always fall within the middle third of the footing pad.

13-6. Retaining walls. The design of retaining walls for seismic forces in Seismic Zone 4 will use an additive seismic factor of 20 percent of the total earth pressure forces plus 20 percent of the weight of the wall at a point 2/3 the fill height above the base of the retaining wall. The stresses in the concrete and reinforcing steel will not be critical, as the increase in stresses or decrease in load factor is greater than the increase due to seismic load. The overturning effect on the footing may be critical in some cases. The footing will be sized so that there is no theoretical net tension between the footing and the supporting ground. In Seismic Zones 1, 2, and 3, the 20 percent factor will be proportioned in the ratio of the Z factor to 0.4.

13-7. Buried structures. Buried tanks and pipes of moderate size, or smaller, generally do not require special seismic design considerations if applicable nonseismic design criteria are satisfied. However, tanks, tunnels, pipes, etc. that have large cross sections or are classified for essential or important usage will require special considerations for seismic design that are not included *in* the scope of this manual. In the design of long structures, consideration will be given to the wave shape and ground deformation resulting from the seismic ground motion. Where changes in the support system, configuration, or soil condition occur, flexible couplings will be provided in order to accommodate the anticipated deformation, as discussed in chapter 14.

CHAPTER 14

UTILITY SYSTEMS

14-1. Introduction. This chapter prescribes the criteria for utility systems and components 5 feet or farther beyond buildings in seismic areas. Utility systems have been classified as being either above grade or underground. Principles, factors, and concepts involved in seismic design are illustrated. These are not mandatory; therefore, other equivalent methods or schemes complying with applicable agency guide specifications and the intent of this manual may be used.

14-2. General. Utility systems will be planned and designed in accordance with the provisions given in this chapter, except as follows–

a. Systems above grade. Utility system components and equipment supports above grade will be designed in accordance with the applicable provisions of chapter 12.

b. Rigorous analysis. No part of this chapter will be construed to prohibit a rigorous analysis of an exterior utility system either above or below grade by established principles of structural dynamics and soil mechanics. Such an analysis must demonstrate that the exterior utility system will withstand, without disrupting service, the ground accelerations and associated deformations induced in the system by a major seismic event. The effect of such an event on the system will be determined using either acceleration-time history records or equivalent response spectra of major seismic events. The actual earthquake record or response spectra used, including artificially generated spectra, will be geologically and seismologically appropriate to the site and may be scaled in amplitude for maximum base acceleration as determined by the earthquake history of the area and by the principles of engineering seismology.

14-3. Earthquake considerations for utility systems.

a. Earthquake resistant facilities. A fundamental precept of seismic design is that it is virtually impossible to design facilities to resist every earthquake without damage. Some damage must always be expected. The proper emphasis for good seismic design of exterior utility systems should then be on the development of earthquake resistant facilities for which measures have been taken to limit damage and to provide for expedient restoration of service. The two most important parameters in evaluating the seismic resistance of utility systems are site geology and structural configuration.

b. Site geology. The geology beneath a facility exerts considerable influence on the magnitude of the surface accelerations and deformations experienced during an earthquake. Current seismic building codes generally recognize this by taking soil type into account in seismic design (e.g., S-factor in chap 3). The best material on which to construct a utility system, from a strictly seismic standpoint, is sound rock. Unconsolidated sand and soft clay present the greatest hazards. Unconsolidated materials, either native soil or fill, present hazards of uncontrolled or differential settlements and/or lateral spreading. Even when utilities are built on good soils, considerable structural difficulties can develop. Large strain gradients can be induced at the interface between native soil and engineered fill and damage buried utilities if the fill is improperly compacted or is improperly benched or terraced. Seismically induced relative movement of the fill with respect to the native material can, through settlement or through slippage at the fill-native material interface, shear off an underground utility pipe.

c. *Structural configuration.* Structurally flexible underground systems have better earthquake resistance than rigid systems. Underground utilities can often be displaced during an earthquake, despite the relatively large-magnitude forces that may be required to initiate movement. A flexible system designed to accommodate the anticipated ground deformation will be less apt to fail during a major earthquake. Utility pipes rigidly attached to appurtenances can be sheared off by seismically induced differential settlements between the appurtenance structure and the adjoining pipes. Flexibility should be provided in utility pipes at entrances to and exits from heavy, rigid appurtenances, especially in systems dependent upon sound, untracked pipe and connections for satisfactory performance. The same is true for pipes passing from native material into engineered fill, While it is not feasible to design the utility pipe to support some portion of the fill, the pipe can be made flexible at the interface to accommodate the anticipated relative movement.

14-4. General planning considerations. The considerations presented herein are guidelines for the planning of earthquake-resistant facilities. Since some damage should always be expected with major seismic activity, the considerations given here stress procedures to be followed to

lessen the effects of seismic activity on utility systems and service.

a. Municipal-sized facilities. Such facilities should be planned and designed with due regard for possible seismic emergencies; disaster plans and equipment that may be required should be anticipated. Examples of emergency provisions and policies that may be anticipated in the planning stage are as follows:

(1) Specialized emergency equipment, such as mobile flame ionization detectors necessary for the detection of gas leaks, should be available.

(2) Structures that may be used as emergency operation centers should be equipped with battery or other standby power supply systems for communication with emergency vehicles by two-way radio.

(3) Provision should be made for the procurement of gasoline for emergency vehicles. Manually operated fuel pumps should be provided for use in pumping gasoline in the event of power failure.

(4) Emergency lights powered by a battery-driven or gasoline-driven generator should be provided for use in restoring utility service in the event of a power failure.

(5) The engineering staff responsible for the utility system should, from time to time, bring the emergency seismic disaster plans up to date.

(6) Seismic disaster plans should include contingency plans defining procedures for dealing with fires, landslides, and possible health hazards resulting from disrupted sanitary facilities.

b. Individual facilities. Examples of earthquake disaster procedures that may be implemented into the design in the planning stage are as follows–

(1) Persons having responsibility for the supervision and maintenance of critical facilities should establish earthquake disaster plans. Such plans will be subject to the approval of the utility authority.

(2) The utility authority should emphasize the importance of seismic disaster plans to the supervisory personnel of essential facilities. Seismic disaster plans should be emphasized to the same extent as fire protection plans.

(3) Capability should be established in critical facilities for water to be supplied from emergency reservoirs or wells.

(4) Personnel should be organized to shut off gas service, but only when they smell gas, and they should be instructed not to restore service until advised to do so by the utility authority. For essential facilities in Seismic Zones 3 and 4, an approved earthquake-actuated gas shut-off valve should be provided.

(5) Plans showing the locations of utility service lines in buildings should be kept in a safe and accessible location so as to be available for emergencies.

14-5. Specific planning considerations. The requirements given here are intended to be used in the planning of a utility system of either a major facility of municipal size or an individual facility of high priority in seismic areas. These requirements supplement applicable agency manuals.

a. *General.* Whenever practical, utility piping should avoid unstable ground or known earthquake faults, should not traverse native soil structures having widely varying degrees of consolidation, and should not pass from natural ground to unstable fill.

b. Water. Where possible, it is preferable to have at least two independent sources of water supply for municipal-sized facilities in Zones 2, 3, and 4 (refer to chap 3, para 3-4 for seismic zone maps). When water is furnished by a public utility company, a secondary supply may be provided from on-site wells or from an on-site reservoir. When the water source consists of an on-site well, an additional well should be drilled at a point as widely separated as is practical from the first well. Decentralization of municipal-sized waterworks will provide a more flexible water supply network and thus promote a more dependable water supply during a disruptive earthquake. Where practicable, on-site water distribution systems in Zones 2, 3, and 4 should be laid out in a grid pattern. In the event service is disrupted in one section of the grid, water may be drawn from any of several adjacent sections. The grid will be valved to prevent loss of stored emergency supply, to permit the isolation of breaks, and to facilitate the emergency distribution of water (e.g., fig 14-7).

c. *Gas.* Provisions will be made such that installations normally supplied by public utility systems in Zones 2, 3, and 4 for which a gas outage would be critical can be supplied by a liquid petroleum gas (LPG) standby system. Gas distribution networks in Zones 1, 2, 3, and 4 will be valved so that breaks in gas lines may be isolated.

d. Power. Two independent sources of support are less likely to be available for electrical distribution systems than for water and gas supply systems. For Zones 2, 3, and 4, standby power generating facilities should be maintained for use in critical areas such as essential systems for hospitals, computer centers, communication systems, etc. in the event of normal power supply disruption. Such standby systems may consist of diesel- or gasoline-engine-driven electric generators located within the building.

e. Sanitary sewers. The design of sewer systems for municipal-sized facilities located in Zones 2, 3, and 4 will incorporate provisions to eliminate as much as practicable the possibilities of wastewater flooding, contamination of groundwater, and contamination of open water storage reservoirs, should rupture occur to sewers and sewage disposal structures. The design of sewage treatment facilities in Zones 2, 3, and 4 will consider the possibility of decentralizing treatment facilities to minimize possible damage. The practicability of decentralization will be weighed against increased operating, maintenance, and initial costs. In Zones 2, 3, and 4 a means will be provided to rapidly empty and bypass sewage treatment and sewage pumping plant facilities. Should it be impossible to dump raw sewage into emergency outfalls, some simple method of treating the raw sewage should be provided to safeguard health and prevent a nuisance. Mobile pumping equipment should be available for pumping raw sewage into the nearest sewer collector in the event of a pumping plant breakdown.

f. Storm sewers. More damage to storm sewers and storm sewer facilities can be tolerated than to sanitary sewers and sewage disposal facilities. Cracked or damaged storm sewers in most instances present little danger to health or property. In certain areas where damage to equipment can result from flooding or from infiltration and settlement of fill, care in the design of the storm sewer system must be taken in order to minimize the effects of cracked or broken pipes.

g. *Miscellaneous systems.* It is not feasible to provide secondary distribution systems for central steam, motor vehicle fuel, air, and similar utility systems, but all planning considerations given above, where applicable, will apply to these systems.

14-6. Design considerations. The provisions of this paragraph are intended to supplement rather than supersede the provisions of the various military design manuals and other applicable government criteria.

a. Materials and construction. Specifications for materials and construction will be governed by the applicable government criteria.

b. Pipe flexibility. No section of pipe in Zone 2, 3, or 4 will be held fixed while an adjoining section is free to move, without provisions being made to relieve strains resulting from differential movement, unless approved calculations show that the pipeline can resist the stresses caused by the predicted or estimated pipe movements. Flexibility will be provided by the use of flexible joints or couplings (e.g., figs 14-1 through 14-6) at the following points:

(1) Immediately adjacent to both sides of the surface separating different types of soil having widely differing degrees of consolidation.

(2) At all points that can be considered to act as anchors.

(3) At all points of abrupt change in direction, and at all tees.

c. *Water.* Buildings housing essential functions, such as hospitals, will be provided with two or more service lines, The service lines will be connected to separate sections of the grid so as to provide continued *service* in the event *one* section of the grid is isolated. Services will be interconnected in the building with check valves to prevent backflow. Flexible couplings or flexible connections will be used between valves and lines for valve installations on pipes 3 inches or larger in diameter. In remote areas or at a site with a single water source, auxiliary storage would be an acceptable alternative.

d. Gas. When secondary or standby gas supply systems cannot be justified for a site, gas distribution networks for buildings in Zones 2, 3, and 4 housing essential functions dependent upon gas will include an aboveground valved and capped stub. Provision will be made for attachment of a portable, commercial-sized gas cylinder system to this stub. For essential facilities in Seismic Zones 3 and 4, an earthquake-actuated shut-off valve will be provided. Provisions will be made for the expedient restoration of service and for the prevention of pilot light leaks when service is restored. If an earthquake-actuated shut-off valve presents the possibility of disrupted service in buildings where the fire hazard is small, a manually operated shut-off valve will be installed. The location and operation of such a valve will be made known to the supervisory personnel of the building.

e. Power. Individual aboveground components of electrical utility systems will be designed for seismic forces under the provisions of chapter 12. Slack will be provided in underground cables whenver such cables enter or exit rigid appurtenances. The provisions of paragraph 14-6b will not be held applicable to underground electrical utility conduits.

f. Storm sewer facilities. While it is desirable to have flexibility in storm sewer pipe, such flexibility cannot, in most instances, be provided without inordinate cost. The provisions of paragraph 14-6b will not be held applicable to storm sewer pipes. Every attempt should be made, however, to provide flexibility in the connection of storm sewer pipes to rigid appurtenances in Zones 2, 3, and 4.

14-7. Seismic details. Figures 14-1 through 14-7 are provided to show acceptable seismic details. Some of the plates show examples of good and poor seismic details. Other plates merely illustrate details that have exhibited good seismic details and resistance. Where required by the provisions of this chapter, these recommended seismic details or similar equivalent details will be incorporated in the utility design.

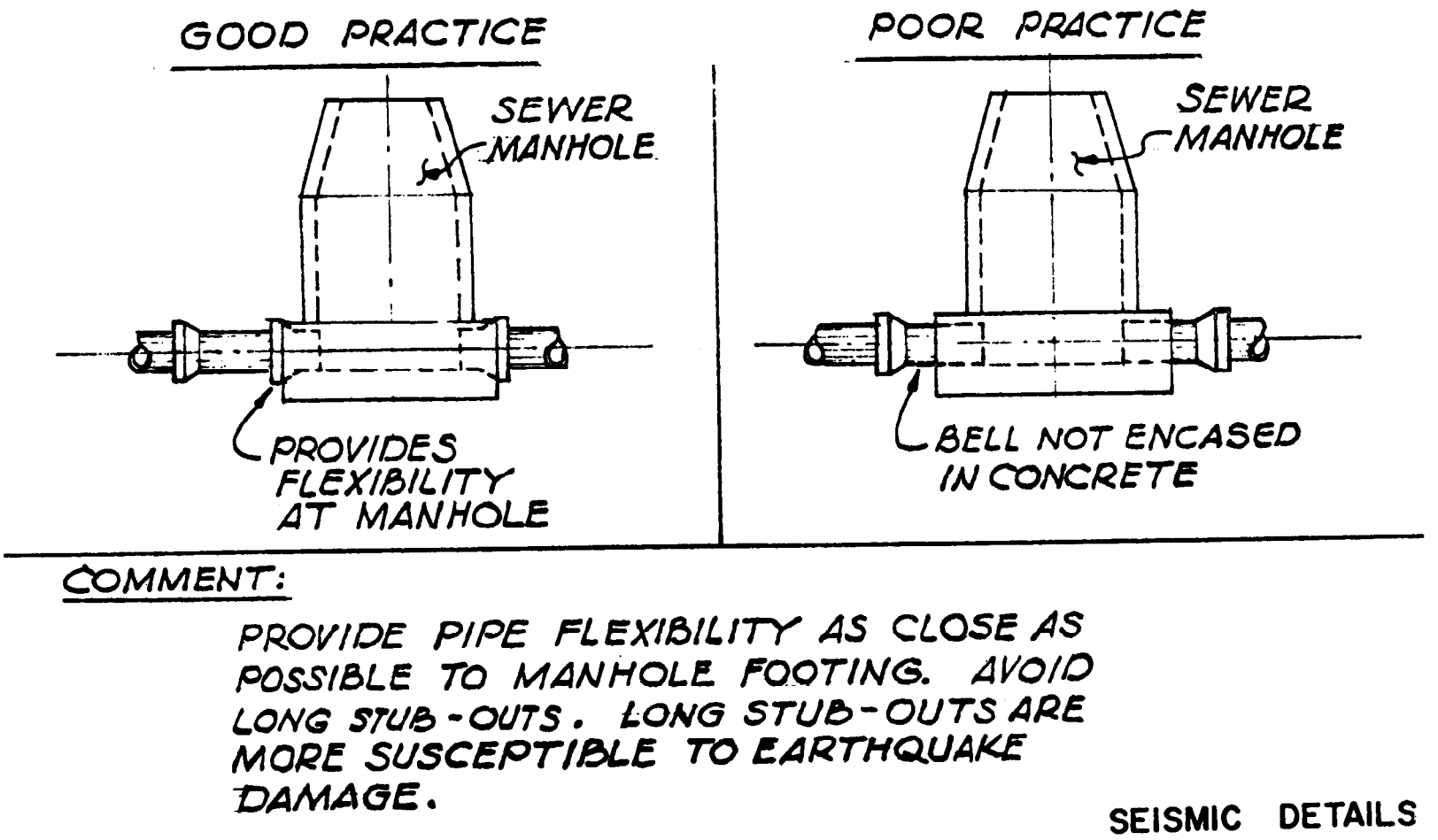

Figure 14-1. Manhole footing.

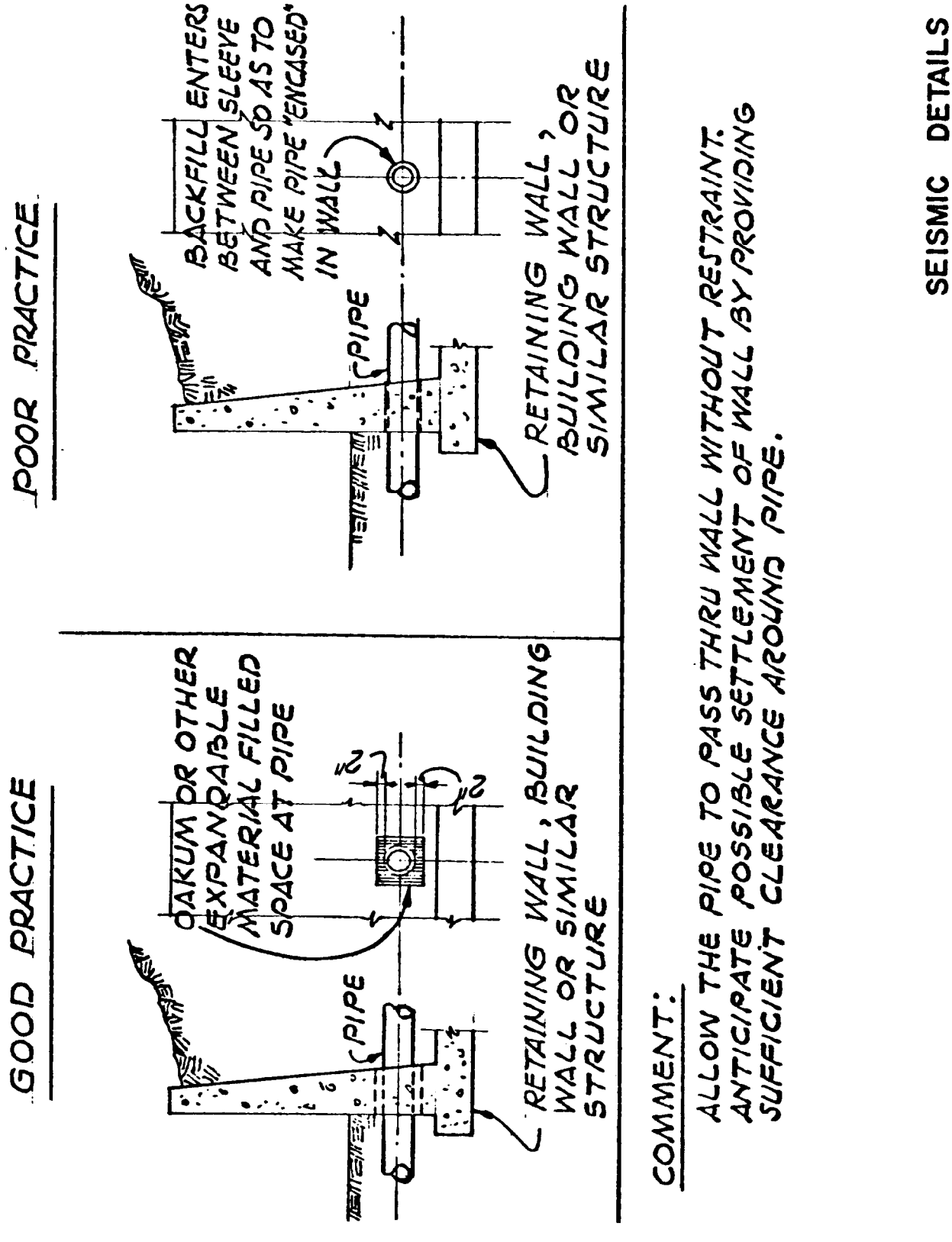

SEISMIC DETAILS

Figure 14–2. Pipe through wall.

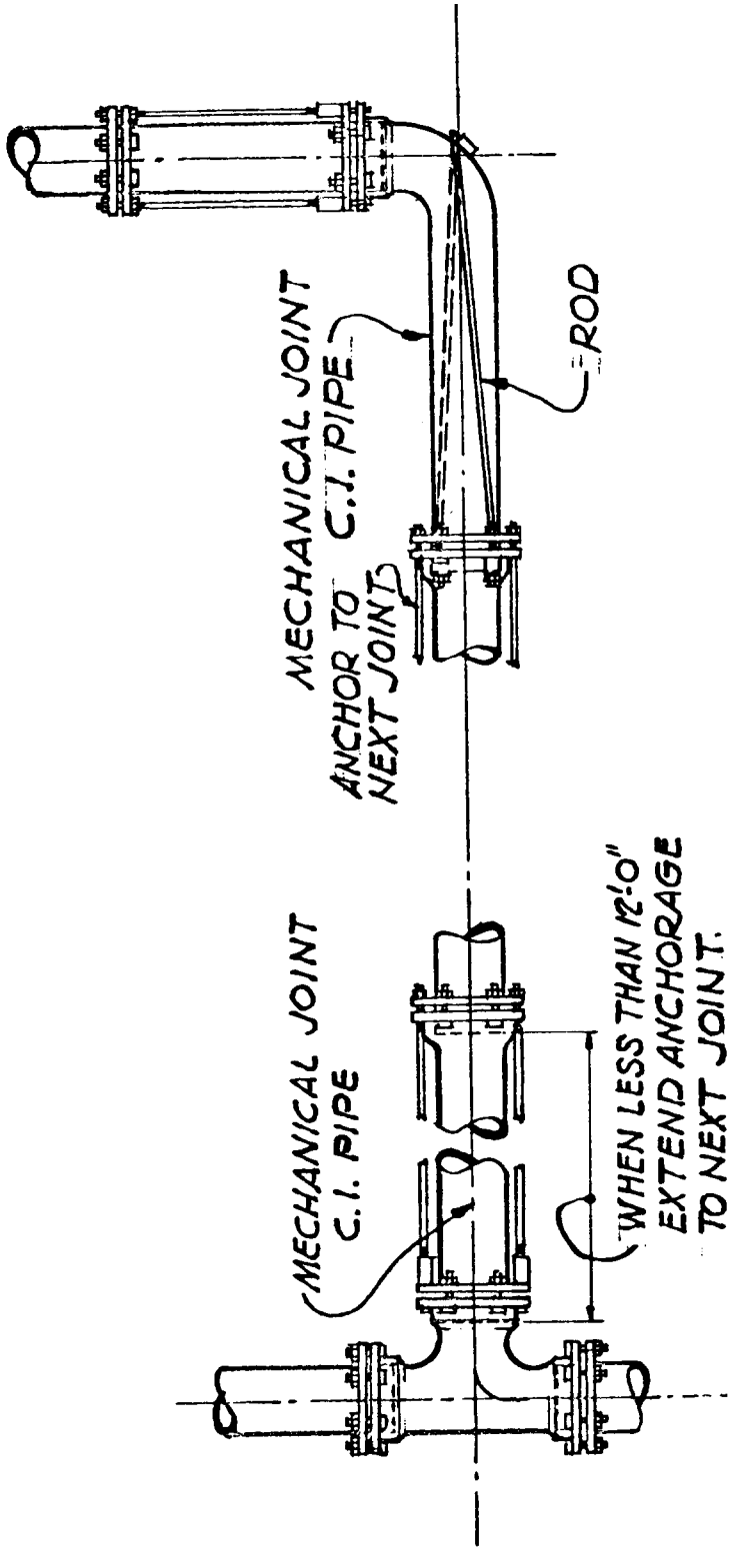

90° BEND

TEE

COMMENT:

SHOWN ABOVE ARE TWO TYPES OF ACCEPTABLE FLEXIBLE JOINTS. SINCE ANCHOR BLOCKS ARE NOT REQ'D, FLEXIBLE CONNECTIONS ARE NOT NECESSARY FOR ALL ENDS OF THE TEE.

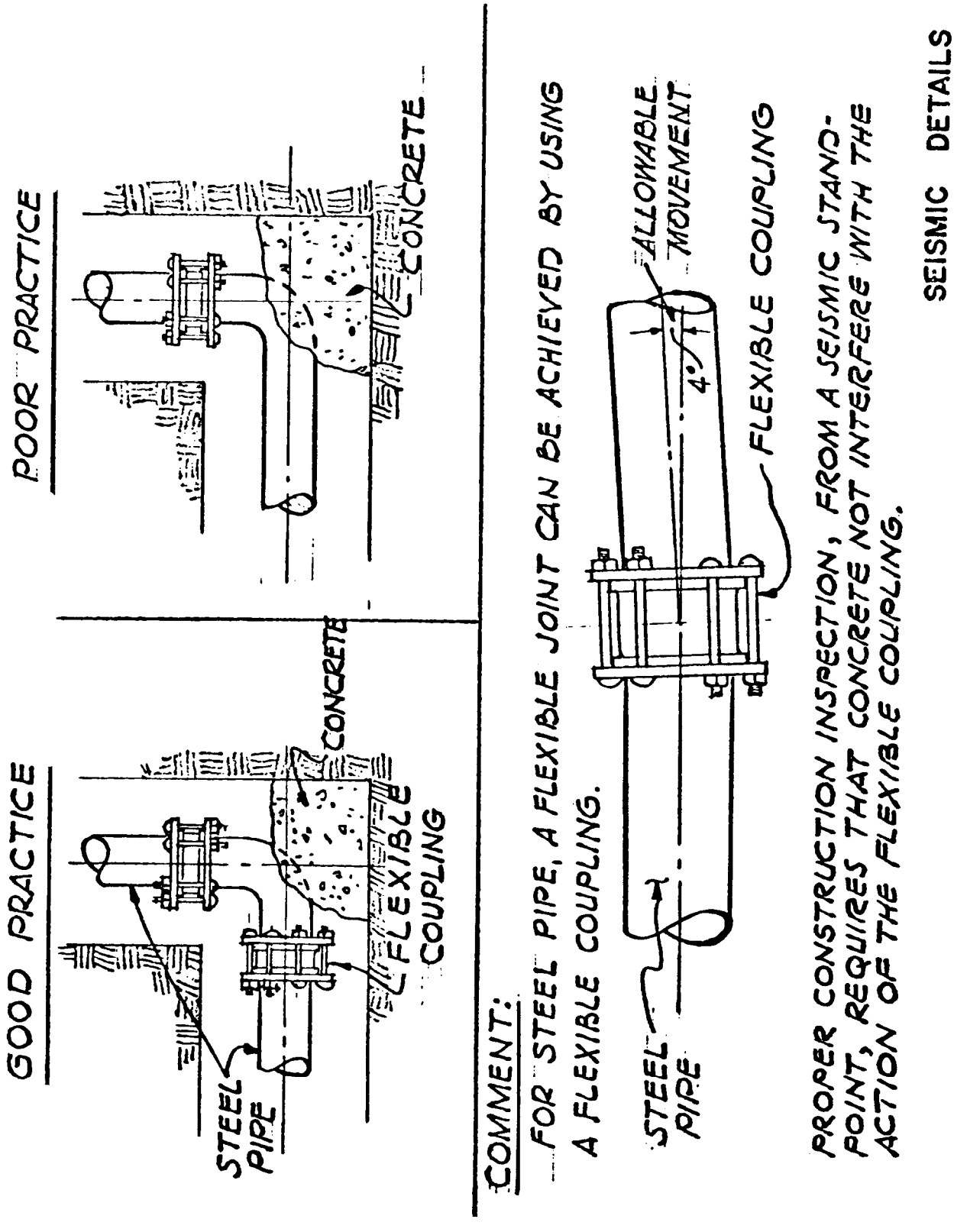

Figure 14-4. Flexible coupling.

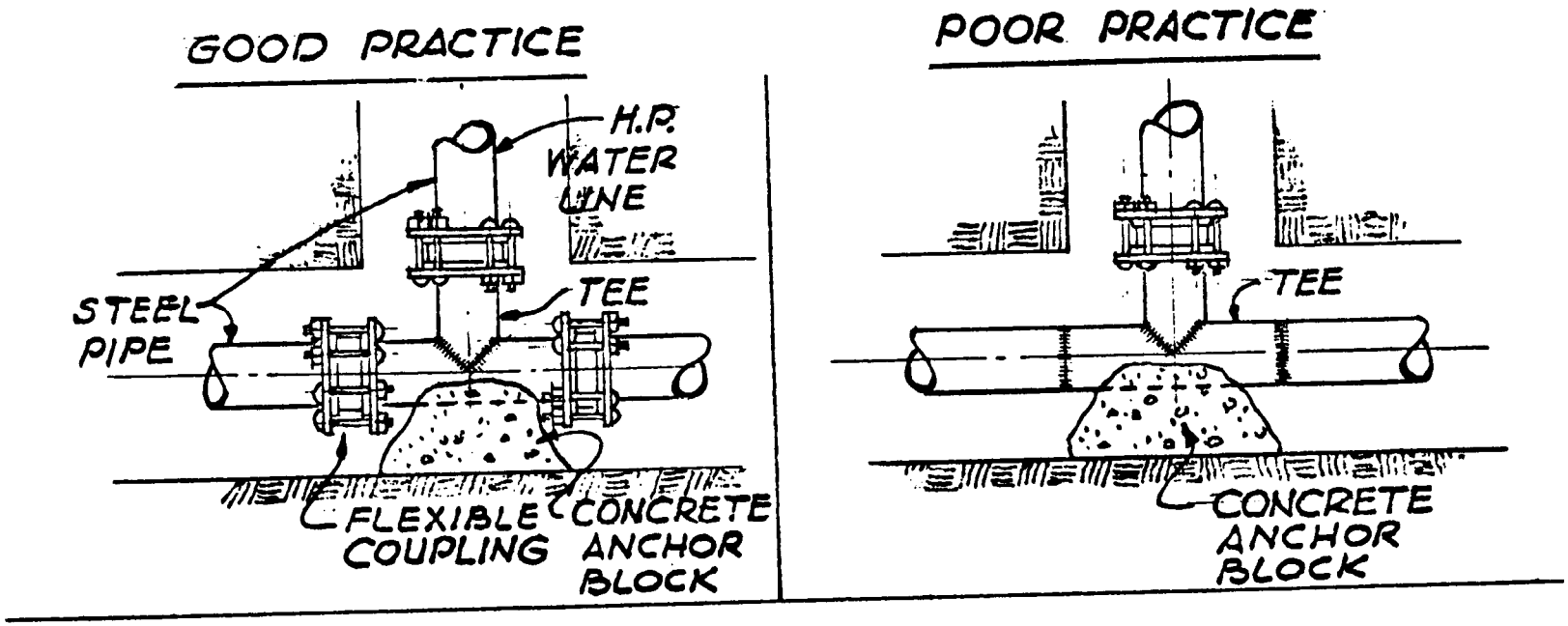

COMMENT :

GOOD SEISMIC DESIGN PRACTICE REQUIRES THE USE OF THREE FLEXIBLE COUPLINGS AT AN ANCHORED TEE. THE CONCRETE ANCHOR BLOCK USED TO PREVENT THE HIGH-PRESSURE WATER LINE FROM SEPARATING ALSO PREVENTS MOVEMENT UNLESS FLEXIBILITY IS PROVIDE BY FLEXIBILE COUPLINGS.

SEISMIC DETAILS

Figure 14-5. Coupling at tee.

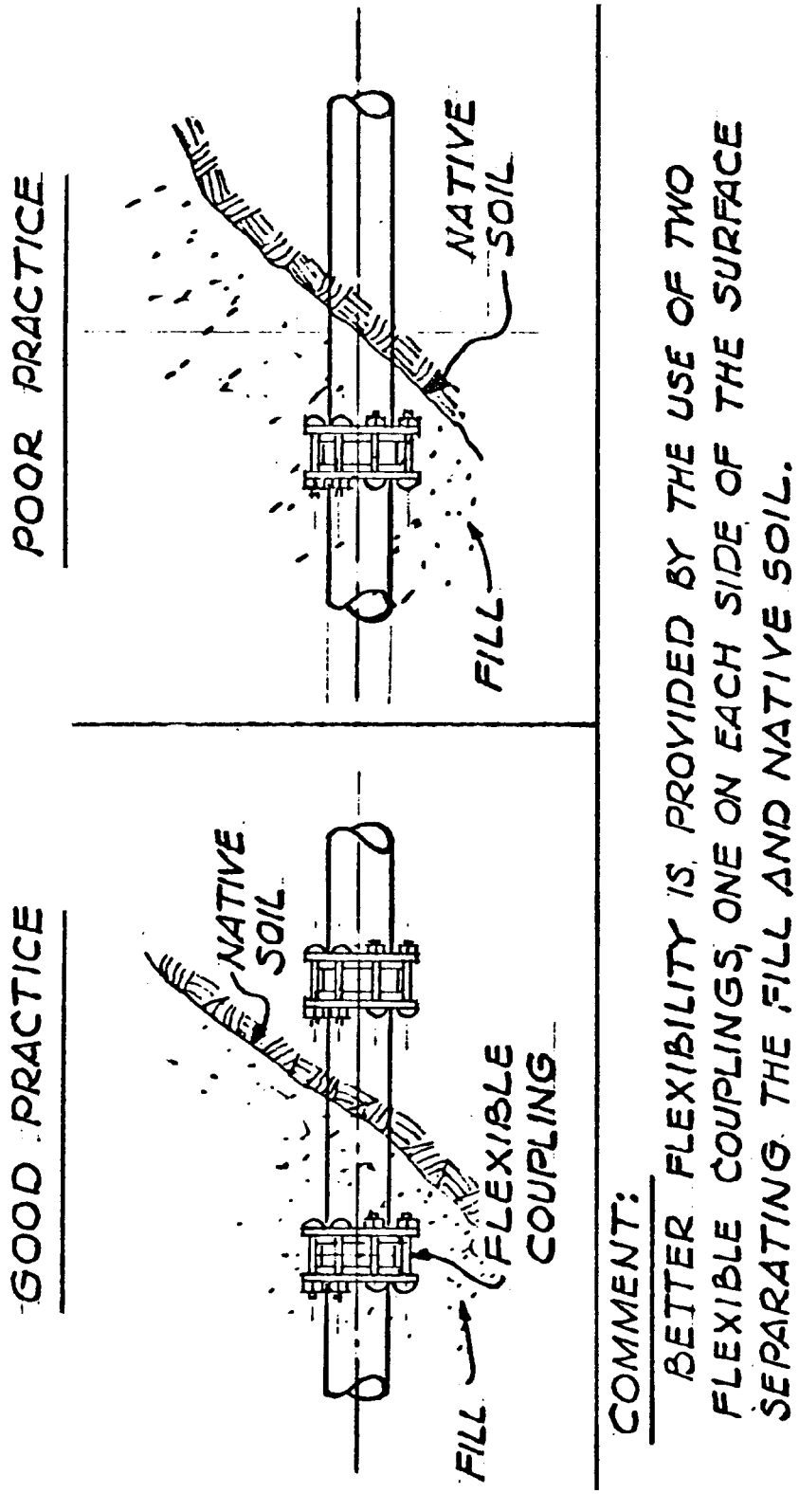

SEISMIC DETAILS

Figure 14–6. Fill-native material interface.

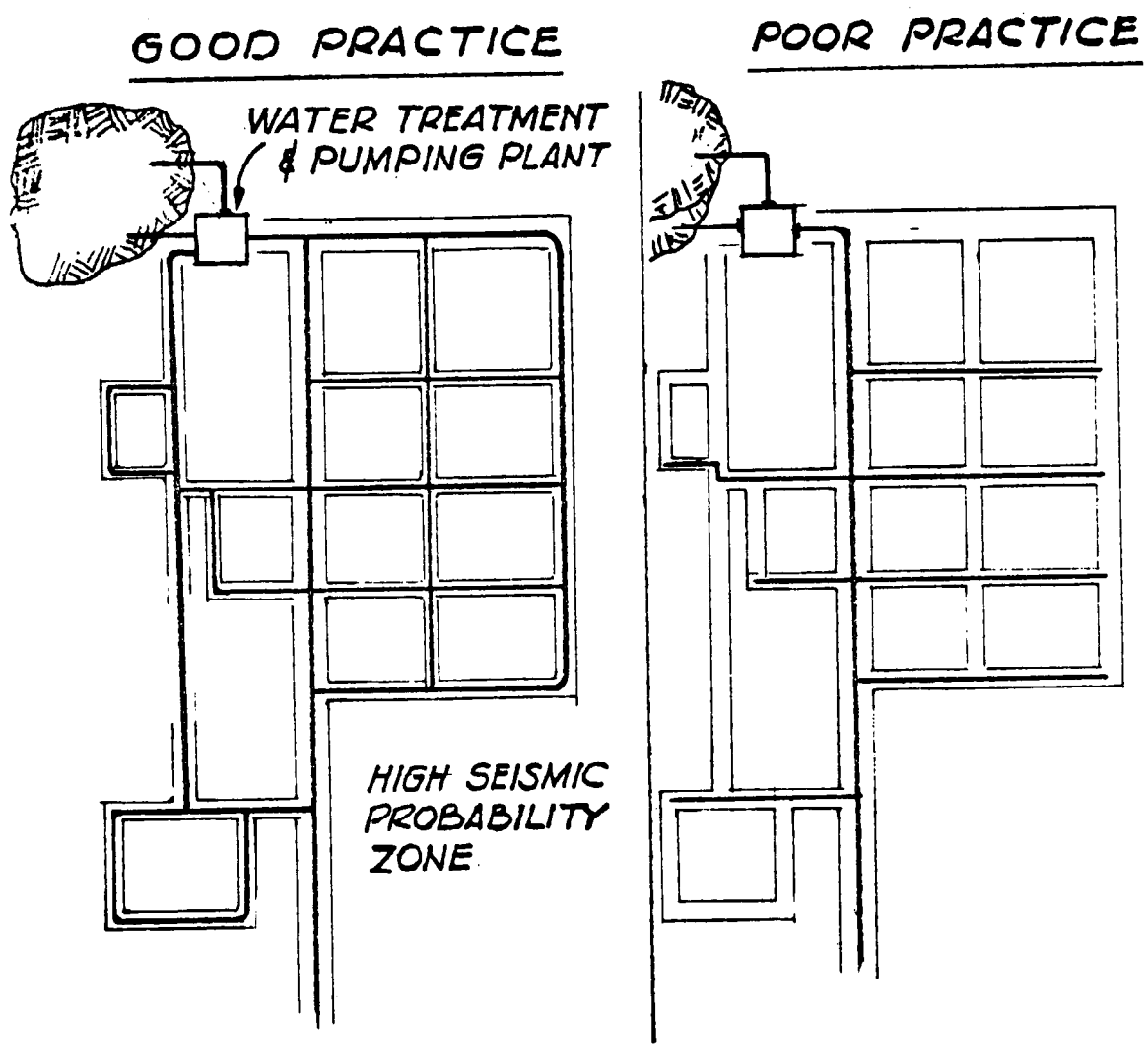

COMMENTS

USE GRID SYSTEM WHEN LAYING OUT MUNICIPAL SIZE WATER DISTRIBUTION FACILITIES. THE GRID SYSTEM PROMOTES MAXIMUM FLEXIBILITY IN WATER DISTRIBUTION.

THE GOOD PRACTICE DISTRIBUTION SYSTEM CANNOT BE PUT OUT OF SERVICE BY A BREAK IN ANY ONE LINE.

WATER DISTRIBUTION NETWORK FOR MUNICIPAL SIZE FACILITY

SEISMIC DETAILS

Figure 14-7. Water distribution network.

APPENDIX A

REFERENCES

Government Publications.

Departments of the Army, Navy, and Air Force.

TM 5-809-l/AFM 88-3, Chap 1	Structural Design Criteria–Loads
TM 5-809-2/AFM 88-3, Chap 2	Structural Design Criteria for Buildings
TM 5-809-3/AFM 88-3, Chap 3	Masonry Structural Design for Buildings
TM 5-809-10-UNAVFAC P-355.1/ AFM 88-3, Chap 13, Sec A	Seismic Design Guidelines for Essential Buildings
TM 5-809–10-2/NAVFAC P-355.21 AFM 88-3. Chap 13, Sec B	Seismic Design Guidelines for Upgrading Existing Buildings

Nongovernment Publications.

American Concrete Institute (ACI), P.O. Box 19150, Redford Station, Detroit, MI 48219

ACI 318-89	Building Code Requirements for Reinforced Concrete
ACI 315-86	Details and Detailing of Concrete Reinforcement
ACI SP-17-91, -17A-90	Design Handbooks

American Institute of Steel Construction (AISC), 400 North Michigan Avenue, 8th Floor, Chicago, IL 60611

Manual of Steel Construction, Allowable Stress Design, ninth edition (1989)

Specification for Structural Steel for Buildings (June 1, 1989) with Commentary

American National Standards Institute, 1430 Broadway, New York, NY 10018

ANSI A17.1-1984, Appendix F, National Elevator Standards

American Petroleum Institute, 1220 L Street Northwest, Washington, DC 20005

API Standard 650, Welded Steel Tanks for Oil Storage (1984)

American Water Works Association, 6666 West Quincy Avenue, Denver, CO 80235

ANSI/AWWA D100-84, AWWA Standard for Welded Steel Tanks for Water Storage (1979)

National Fire Protection Association, Batterymarch Park, Quincy, MA 02269

NFPA 13 (1989), Installation of Sprinkler Systems

National Forest Products Association, 1250 Connecticut Avenue Northwest, Washington, DC 20036

National Design Specification for Wood Construction (1986) and Design Values for Wood Construction (1986).

Prestressed Concrete Institute, 20 North Wacker Drive, Chicago, IL 60606

PCI-MNL–120–85, PCI Handbook: Precast and Prestressed Concrete, third edition (1981)

Steel Deck Institute, Inc., P.O. Box 9506, Canton, OH 44711 SDI-02 Diaphragm Design Manual, second edition (1987)

Structural Engineers Association of California, P.O. Box 19440, Sacramento, CA 94819–0440
Recommended Lateral Force Requirements and Commentary (1990)

Appendix B

RECOMMENDED LATERAL FORCE REQUIREMENTS 1990 EDITION

OF

GENERAL REQUIREMENTS FOR THE DESIGN AND CONSTRUCTION OF EARTHQUAKE RESISTIVE STRUCTURES

B-1. General.

a. Every structure and every portion thereof shall, as a minimum, be designed and constructed to resist the effects of seismic ground motions as provided in these requirements. Any jurisdiction may adopt more stringent requirements.

b. Where code prescribed wind design produces greater effects the wind design shall govern but detailing requirements and limitations prescribed in these provisions shall be followed.

c. A continuous load path, or paths, with adequate strength and stiffness shall be provided which will transfer all forces from the place of application to the resisting elements.

d. The basis for the seismic design shall be stated on the structural drawings. The statement shall include: (1) the governing edition of the building code; (2) the total base shear coefficient used for seismic design; and (3) a description of the lateral force resisting system, as defined in these requirements.

e. Calculations may include the results from an electronic digital computer program. The following requirements apply to calculation submittals to a building official which include such computer output.

(1) A drawing of the complete mathematical model used to represent the structure in the computer-generated analysis shall be provided.

(2) A program description (User's Guide) shall be available and contain the information necessary to determine the nature and extent of the analysis, verify the input data, interpret the results, and determine whether the computations comply with these recommendations.

(3) Data provided as computer input shall be clearly distinguished from those computed in the program. The information required in the output shall include date of processing, program identification, identification of structures being analyzed, all input data, units and final results.

(4) The first sheet of each computer run shall be signed by the engineer responsible for the structural design.

B-2. Design criteria. The Structural Engineers Association of California (SEAOC) manual *Recommended Lateral Force Requirements and Commentary 1990 Edition* is an integral part of this manual. It is necessary to have the SEAOC manual to use this Technical Manual.

The SEAOC manual can be obtained by contacting:

Structural Engineers Association of California
P.O. Box 19440
Sacramento, California 94819-0440

APPENDIX C

SEAOC AMENDMENTS TO ACI 318

C-1. The following amendments to ACI 318-89 are compatible with the 1990 SEAOC recommendations.

C-2. Add the following provision:
Plain concrete shall not be used for structural members of buildings *in* Zones 2, 3, and 4.

C-3. In ACI 21.1, add the following definitions:
a. Confined core. The area within the core defined by h_c.
b. SMRF. Special moment resisting frame conforming to the provisions of ACI 21.1 through 21.7, as they apply to moment resisting frames.
c. *Seismic hook.* A 135-degree bend with an extension of six bar diameters, but not less than 3 inches, that engages the longitudinal reinforcement and projects into the interior of the stirrup or hoop.
d. Wall pier. A wall segment with a horizontal length-to-thickness ratio between 2.5 and 6, whose clear height is at least two times its horizontal length.

C-4. In ACI 21.1, add the following definition of design load combinations:
The load factors given in ACI equations 9–2 and 9-3 shall be modified to

$U = 1.4(D + L + E)$

$U = 0.9D + 1.4E$

C-5. Add to ACI 21.2.4.2:
In no case shall the compressive strength of lightweight concrete used in design exceed 6000 psi.

C-6. Add to ACI 21,3.3.4:
Stirrups shall have seismic hooks

C-7. Add to ACI 21.4.1:
The requirements of this section also apply to all members resisting gravity loads by compression.

C-8. Add to ACI 21.4.1:
Any area of a column which, for architectural purposes, extends more than 4 inches beyond the confined core shall have minimum reinforcing as required for nonseismic columns as specified in 21.8.

C-9. Add to ACI 21.4.3.2:
Tension splices shall be proportioned as Class A tension splices in accordance with chapter 12 and shall have transverse reinforcement over the full lap splice length in accordance with 21.3.2.3.

C-10. Add to ACI 21.4.4.4:
Where the calculated point of contraflexure is not within the middle half of the member clear height, provide transverse reinforcement as specfied in 21.4.4.1 through 21.4.4.3 over the full height of the member.

C-11. Replace the last sentence of ACI 21.4.4.5 with the following:
If the column terminates on a wall footing or mat, transverse reinforcement as specified in 21.4.4.1 or 21.4.4.3 shall extend into the footing or mat either the compressive development length of the largest longitudinal reinforcement or the lead length of a standard hook.

C-12. Add to ACI 21.4.4:
At any section where the ultimate capacity of the column is less than the sum of the shears V_e, computed in accordance with 21.7.1.1 for all the beams framing into the columns above the level under consideration, transverse reinforcement as specified in 21.4.4.1 through 21.4.4.3 shall be provided. For beams framing into opposite sides of the columns, the moment components may be assumed to be of opposite sign. For the determination of ultimate capacity of the columns, these moments may be assumed to results from the deformation of the frame in any one principal axis.

C-13. Add to ACI 21.5.2.4:
Splices in horizontal reinforcement shall be staggered. Splices in two curtains, where used, shall not occur in the same location.

C-14. Add to ACI 21.5.2:
Where boundary members are not required by 21.5.3.1, minimum reinforcement parallel to the edges of all shear walls and diaphragms and boundaries of all openings shall consist of twice the cross-sectional area of the minimum shear reinforcement required per lineal foot of wall.

C-15. Add to ACI 21.5.2:
Transverse reinforcement terminating at the edges of shear walls without boundary elements shall have a standard hook engaging the edge reinforcement, or the edge reinforcement shall be enclosed in 'u' stirrups of the same size and spacing and shall be spliced to the transverse reinforcement.

EXCEPTION Walls with a factored shear, VU, in the plane of the wall less than $A_{cv}\sqrt{f'_c}$ need not meet these requirements.

C-16. Add to ACI 21.5.3:
Structural steel members conforming to SEAOC Chapter 4 and encased monolithically in the walls at the edges may be used for boundary members provided adequate shear transfer is provided between the steel and the concrete.

C-1 7. Add to ACI 21.5:
A cast-in-place topping on a precast floor system may serve as the diaphragm provided the cast-in-place topping 'acting alone is proportioned and detailed to resist the design forces.

C-18. Add to ACI 21.5:
Minimum thickness of diaphragms. Diaphragms used to resist prescribed lateral forces shall not be less than 2 inches thick. Topping slabs placed over precast floor and roof elements shall not be less than 2½ inches thick.

C-1 9. At the end of ACI 21.5, add a new section: Wall piers.

a. Wall piers not designed as part of a SMRF shall have transverse reinforcement designed to satisfy the requirements of paragraph b below.

EXCEPTION 1. Wall piers that satisfy ACI 21.8.

EXCEPTION 2. Wall piers along a line within a story where other shear wall segments provide lateral support to the wall piers and such segments have a total stiffness at least six times the sum of the stiffnesses of all wall piers along that line.

b. Transverse reinforcement shall be designed to resist the shear forces determined from ACI 21.7.1.2 and shall meet the requirements of ACI 21.7.2.1. When the axial compressive force, including earthquake effects, is less than $A_q f_c'/20$, transverse reinforcement in wall piers may have standard hooks on each end in lieu of hoops. Spacing of transverse reinforcement shall not exceed six inches. The zone of transverse reinforcement shall be extended beyond the wall pier clear height for at least the development length of the largest longitudinal reinforcement in the wall pier.

c. Wall segments with horizontal length-to-thickness ratio less than 2½ shall be designed as columns.

C-20. Add to ACI 21.6.1:
Where longitudinal beam reinforcing bars extend through a joint, the column depth in the direction of loading shall not be less than 20 times the diameter of the largest longitudinal bar.

C-21. In ACI 21.7.1.3, change the specification of load combinations from 9.2 to paragraph C-4.

C-22. Add to 21.7.2.1:
Earthquake-induced shear force is the shear induced by the flexural moment strengths of the beams calculated in accordance with 21.7.1.1.

C-23. Delete ACI 21.7.3.1.

C-24. Revise the title of ACI 21.8 to read:
Frame members not part of the lateral force resisting system.

C-25. Delete ACI 21.8.1 and substitute the following:
All frame members assumed not to be part of the lateral force resisting system shall be shown to be adequate for vertical load carrying capacity with the structure assumed to have deformed laterally in accordance with SEAOC lH2d. Such members shall satisfy the minimum reinforcement requirements specified in 21.3.2.1 and 21.5.2.1 and chapters 7, 10, and 11.

C-26. In ACI 21.9.3, delete the word "factored" in reference to "gravity loads."

APPENDIX D

DESIGN EXAMPLES—BUILDING SYSTEMS

D-1. Introduction. This appendix gives illustrative examples for designing various types of lateral systems. Generally, the calculations determine earthquake lateral forces and their distribution to the resisting elements of the buildings; some examples covering frames, walls, diaphragms, and foundations are essentially complete. Calculations are not given where ordinarily accepted design procedures are involved, such as sizing and detailing members once forces are determined.

D-2. Use of this appendix. This appendix is purely advisory; it is not intended to place super-restrictions on the manual. This appendix is not a handbook for the inexperienced designer. Neither the manual, nor the manual supplemented by this appendix, can replace good engineering judgment in specific situations. Designers are urged to study the entire manual.

D-3. Commentary.

a. Unless otherwise indicated, all design examples in this appendix are based on Zone 4, where Z = 0.40. But the principles and methods for determining lateral forces are alike for all zones.

b. Examples D-1, D-2, D-3, and D-5 are for the same basic building, using (1) bearing walls, (2) concrete frames, (3) steel frames, and (4) frames in combination with shear walls (a dual bracing system), respectively. These examples tend to illustrate the relationship between architectural features (fenestration and materials of construction) and structural design.

c. A 10-pound-per-square-foot weight is added to the roof for the seismic effect of the upper half of the top-story partitions.

d. It is assumed that stairs are detailed so as not to transmit shears from floor to floor. Also, removable and special partitions (such as utility room walls) will be made flexible or isolated so as not to affect the distribution of lateral loads or to act as shear walls.

e. Metal-deck roofs are considered to form flexible diaphragms, and roof loads are distributed according to tributary area rather than relative rigidity of walls below.

D-4. Design examples.

Fig. No.	*Description of Design Examples*
D-1	*Box System.* A two-story building with bearing walls in concrete using a series of interior, vertical load-carrying columns and girder bents.
D-2	*Concrete Ductile Moment Resisting Space Frame.* A three-story building with a complete ductile moment resisting space frame in concrete without shear walls.
D-3	*Steel Ductile Moment Resisting Space Frame and Steel Braced Frame.* A three-story building with transverse special moment resisting frames and longitudinal frames with chevron bracing.
D-4	*Dual Bracing System.* A two-story building in concrete with a ductile moment resisting space frame and with shear walls.
D-5	*Dual Bracing System.* A three-story building with a ductile moment resisting space frame in structural steel and with shear walls in concrete.
D-6	*Wood Box System.* A two-story wood framed building, using wood floor and roof decks, and wood stud walls with plywood sheathing.
D-7	*Special Configuration.* A one-story building with concrete bearing walls on three sides and open on one side.
D-8	*L-Shaped Building.* A three-story building with bearing walls in concrete, using a series of interior vertical load-carrying columns and girder bents.

DESIGN EXAMPLE D-1

Building With A Bearing Wall:

Description of Structure. A two-story administration building with bearing walls in concrete, using a series of interior, vertical load-carrying column and girder bents. The structural concept is illustrated on Sheets 3 and 4.

Construction Outline.

Roof :
- Built-up, 5-ply.
- Metal decking with insulation board.
- Suspended ceiling.

2nd Floor :
- Metal decking with concrete fill.
- Asphalt tile.
- Suspended ceiling.

1st Floor:
- Concrete slab-on-grade.

Exterior Walls:
- Bearing walls in concrete, furred with GWB finish

Partitions:
- Non-structural removable dry-wall, except concrete as structurally required.

Design Concept. Since the structure is without a complete load-carrying space frame, the R_w-factor is 6. The metal deck roof system forms a flexible diaphragm, therefore the roof loads are distributed to the shear walls by tributary area rather than by second story wall stiffnesses. The roof diaphragm being flexible will not transmit accidental torsion to the shear walls. The metal deck with concrete fill system for the second floor forms a rigid diaphragm. The shear walls react to the forces from the diaphragm, therefore the relative rigidities of the various walls and the individual piers must be determined. This is necessary so that a logical and consistent distribution of story shears to each wall and pier can be made. The wall analysis utilizes the Design Curve for Masonry and Concrete Shear Walls on Figure 6-4.

Discussion. A 10 psf partition load is included in the seismic roof loading but is not included in the vertical design. The stairs are isolated so that they will not transmit shears from floor to floor. The walls along Lines A C 3 & 5 act as vertical cantilever beams joined by struts at the floor lines. The overturning moments are distributed to the individual piers in proportion to the pier stiffnesses. The end wall along Line 7 abuts an existing building, therefore a wall with no openings is provided. The spandrels in wall along Line 1 must be designed to transfer vertical shears due to shear wall action.

Figure D-1. Box system.

Loads:

Roof:

5-ply roofing	= 6.0 p.s.f.
1"- insulation	= 1.5
Steel deck	= 2.3
Steel purlins	= 3.7
Steel girders & columns	= 1.2
Ceiling	= 10.0
Miscellaneous	= 1.0
Dead Load	25.7 p.s.f.
Add for seismic: Partitions	10.0 p.s.f.
Total for seismic	35.7 p.s.f.*
Live Load	20 p.s.f. (no snow)

2nd Floor:

Finish	= 1.0 p.s.f.
Steel deck	= 3.1
Concrete fill	= 32.0
Steel beams	= 5.9
Steel girders & columns	= 1.5
Partition	= 20.0
Ceiling	= 10.0
Miscellaneous	= 1.0
Dead Load	= 74.5 p.s.f.*
Live Load	= 50.0 p.s.f.

Materials.

Structural steel . . . . . F_y = 36 k.s.i.

Concrete . . . . . f'_c = 4,000 p.s.i., E_c = 3.6×10^6 psi

Reinforcing steel . . . . . f_y = 40,000 p.s.i.

Allowable soil pressure . . . = 3,000 p.s.f. Vertical Load

Allowable soil pressure . . . = 4,000 p.s.f. Vertical plus Seismic

*Weight of shear walls are not included here. The weight of the concrete shear walls are calculated on pages 4 and 5. The weights of the exterior windows and architectural wall panels are included in the partition weights.

Figure D-1. Continued

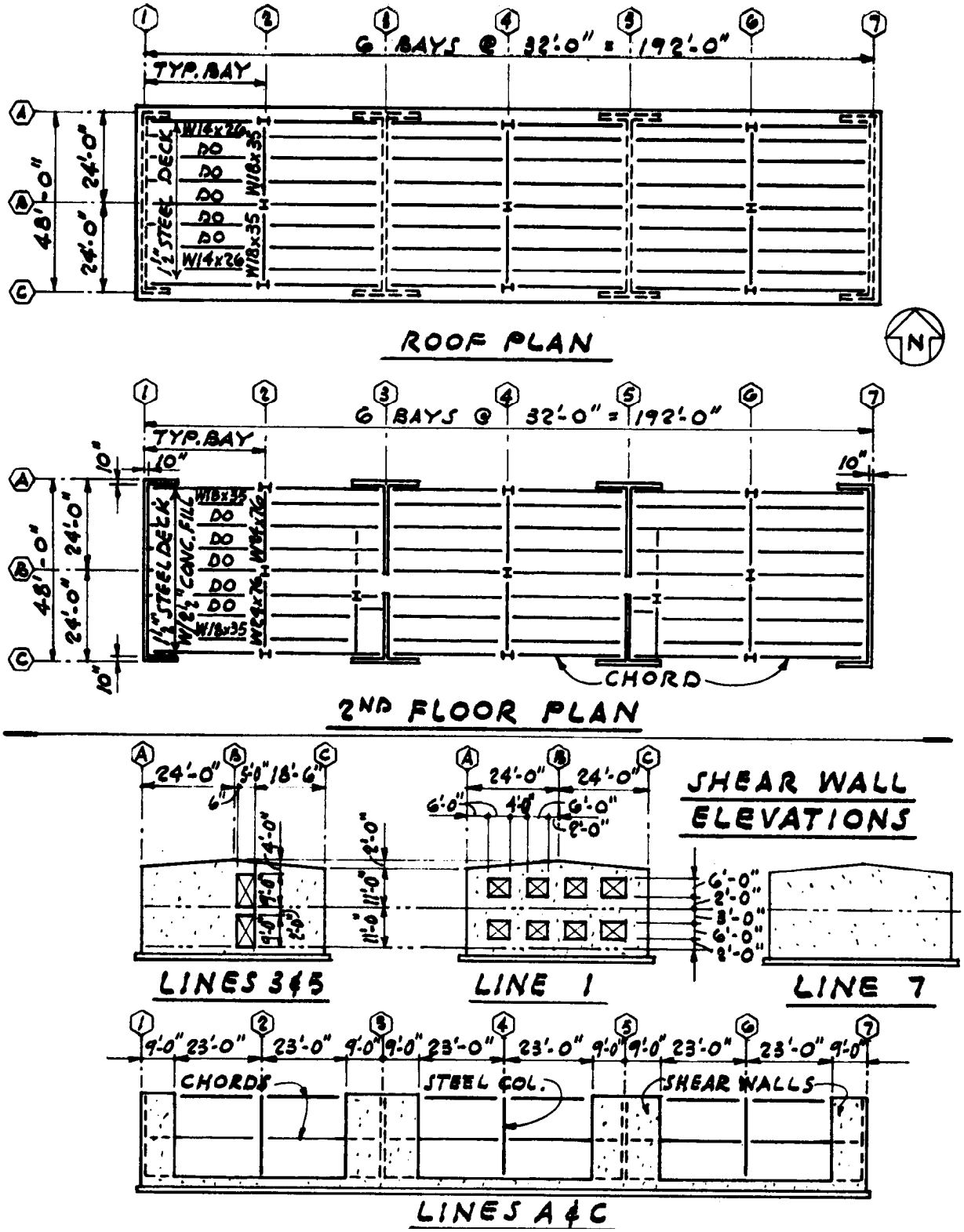

Figure D1. Continued

DISTRIBUTION OF BUILDING WEIGHT TO ROOF DIAPHRAGM @ 100 % G

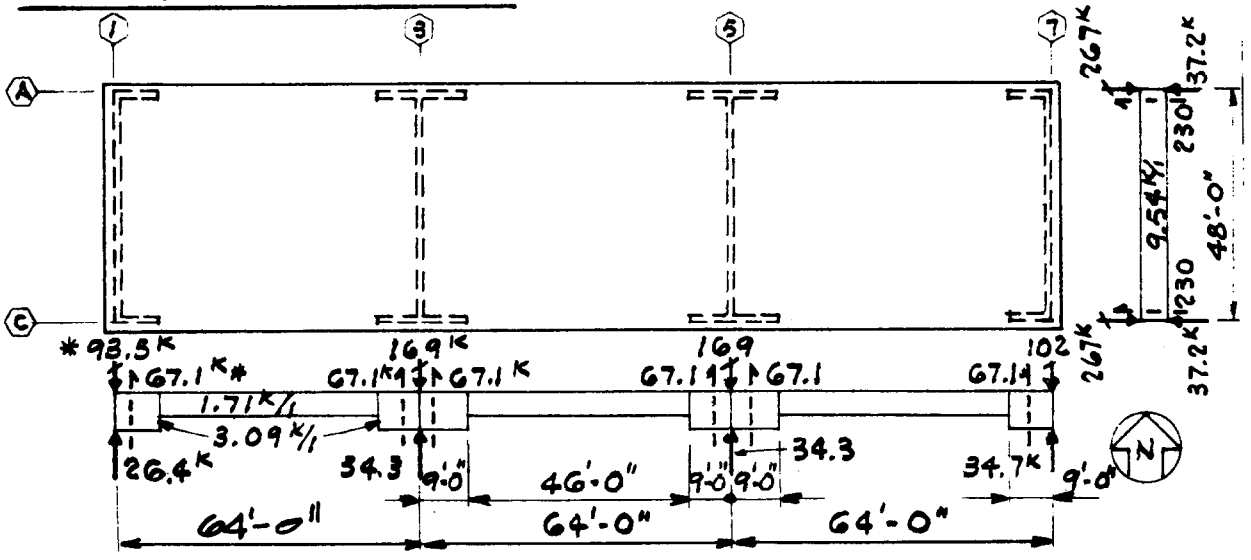

10" CONC. WALLS 0.125 KSF

SIDEWALLS A & C: 5.5' x 0.125 = 0.688 K/1, x 2 = 1.38 K/1

CROSS WALLS 1, 3, 5 & 7: 6.0' x 0.125 = 0.75 K/1, x (2 x .91 + .76 + 1.0) = 2.69 K/1

WALL ON 1 : .76 x 0.75 x 46.33' = 26.4 (76 % SOLID)

WALL ON 7 : 1.0 x 0.75 x 46.33' = 34.7 (100 % SOLID)

WALL ON 3 & 5 : .91 x 0.75 x 46.33' = 31.6 (91 % SOLID)

WALLS ON A & C:

9' WALLS 0.688 x 9' = 6.2 K x 2 = 12.4 K

18' WALLS = 12.4 K x 2 = 24.8 K

37.2 K

		E-W LOADS	N-S LOADS
ROOF	0.0357 KSF (P.2)	x 192' = 6.85 K/1	x 48' = 1.71 K/1
WALLS		2.69	1.38
		9.54 K/1	3.09 K/1

*SAMPLE CALCULATION OF WALL [1]

DISTRIBUTION OF DIAPH. WT TO WALL [1] = 1.71 K/1 x 64'/2 = 54.7
" " SIDEWALL " " " = 1.38 x 9' = 12.4 } 67.1 K

THE WT CONTRIBUTION FROM IN-PLANE SHEAR WALL [1] (SEE ABOVE) 26.4

THE TOTAL WT CONTRIBUTION TO SHEAR WALL [1] 93.5 K

TOTAL TRIB. WT OF ROOF & ALL WALLS W_R = 584 K @ 100 % G

Figure D–1. Continued.

DISTRIBUTION OF BUILDING WEIGHT AT 2ND FLOOR DIAPHRAGM @ 100 % G

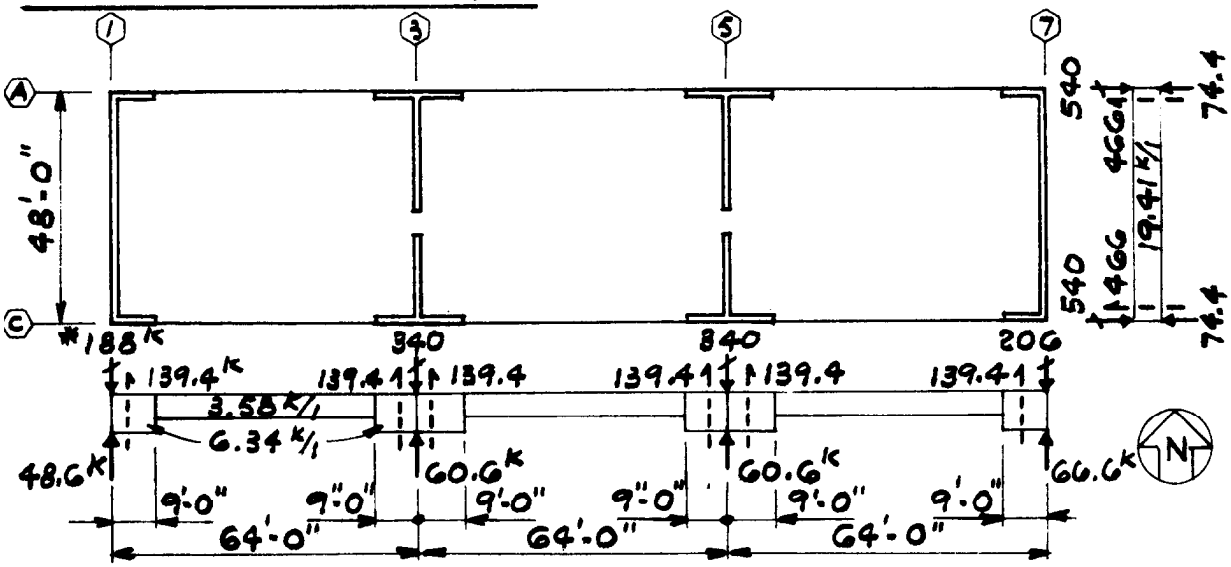

10" CONC. WALLS = 0.125 KSF

WALL ON 1 : .73 × 0.125 × 11.5' × 46.33 = 48.6^K

WALL ON 7 : 1.0 × 0.125 × 11.5 × 46.33 = 66.6^K

WALLS ON 3 & 5 : .91 × 0.125 × 11.5 × 46.33 = 60.6^K

WALLS ON A & C :

9' WALLS 0.125 × 11' × 9' = 12.4^K × 2 = 24.8^K

18' WALLS = 24.8^K × 2 = 49.6^K

74.4^K

	(P.2)	E-W LOADS	N-S LOADS
FLOOR	0.0745 KSF × 192' = 14.30 K/1		× 48' = 3.58 K/1
WALL	0.73 × 0.125 KSF × 11.5' = 1.05		2 × 0.125 × 11' = 2.76
	1.0 × 0.125 KSF × 11.5' = 1.44		6.34 K/1
	2 × .91 × 0.125 KSF × 11.5' = 2.62		
	19.41 K/1		

*SAMPLE CALCULATION FOR WALL [1]

DISTRIBUTION OF DIAPH. WT TO WALL [1] = 3.58 K/1 × 64/2 = 114.6 } = 139.4^K

" " SIDEWALL " " " = 2.76 × 9' = 24.8 }

THE WT CONTRIBUTION FROM THE IN-PLANE SHEAR WALL [1] (SEE ABOVE) = 48.6

THE TOTAL WT CONTRIBUTION TO SHEAR WALL [1] = 188.0^K

TOTAL TRIB WT OF 2ND FLR DIAPH & 2ND FLR TRIB WALLS W_x = 1080^K @ 100% G

Figure D–1. Continued.

LATERAL FORCES (BOTH DIRECTIONS)

$V = \frac{ZIC}{R_w} W$ SEAOC FORMULA 1-1

$Z = 0.40$ (ZONE 4) TABLE 1-A

$I = 1.0$ TABLE 1-C

$R_w = 6$ (BEARING WALL SYSTEM CONCRETE SHEAR WALLS) TABLE 1-G

$S = 1.5$ (ASSUME SOIL S_3) TABLE 1-B

$h_n = 22$ FT. (AVG.)

$C_t = 0.020$

$T = C_t (h_n)^{3/4} = 0.020 (22)^{3/4} = 0.203$ FORMULA 1-3

$C = 1.25S/(T)^{2/3}$ FORMULA 1-2

$= 1.25 \times 1.5 \div (0.203)^{2/3} = 5.43$

BUT NEED NOT EXCEED 2.75

$V = \frac{0.40 \times 1.0 \times 2.75}{6} W = 0.183W$

$= 0.183 \times 1614 = 295^K$, SAY 300^K

LEVEL	h FT.	Δh FT.	w K	Σw K	wh K-FT.	wh/Σwh	F_x K	V K	ΔM_{OT} K-FT.	M_{OT} K-FT.
R	22		534		11,748	.50	150			
		11		534				150	1650	
2	11		1080		11,880	.50	150			1650
		11		1614				300	3300	
GRD	0									4950
Σ			1614		23,628	1.00	300		4950	

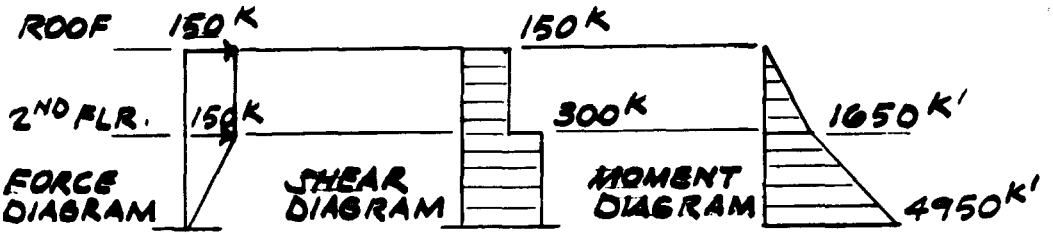

Figure D-1. Continued

RELATIVE RIGIDITIES

2ND STORY WALLS

WALLS	PIER	H	D	H/D	Δ FIG. 6-4	R	ΣR WALL
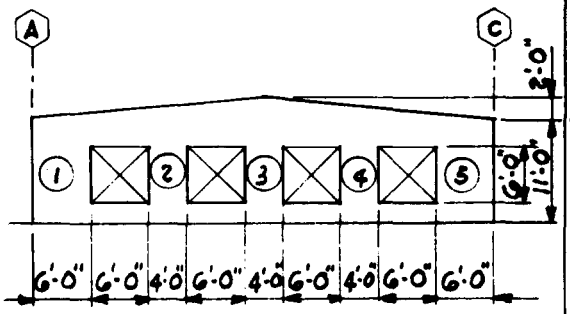	1 & 5 (CORNER FIXED)	6'	6	1.0	0.09	11.1 × 2 PIERS 22.2	
	2, 3, 4 (RECT. FIXED)	6'	4'	1.5	0.22	4.5 × 3 PIERS 13.5	
						ΣR=35.7	
					Δ(1-5)= 1/R=0.028		
	SOLID WALL (CORNER CANT)	12' AVE	48'	0.25	0.018		
	SUBTRACT BAND @ WINDOW (CORNER CANT)	6'	48'	0.125	(0.008)		
					ΣΔ(WALL) = 0.038		ΣR = 1/ΣΔW = 26.3
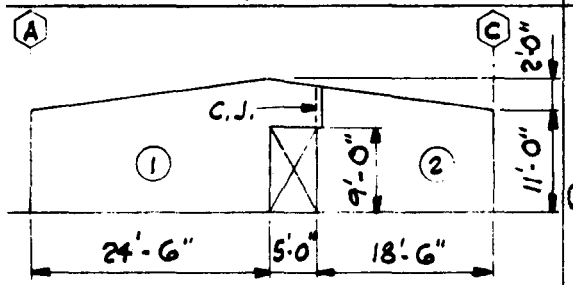	1 (CORNER CANT.)	12' AVE	24.5	0.49	0.044	22.7	
	2 (CORNER CANT.)	12'	18.5	0.65	0.065	15.4	
						ΣR = 38.1	ΣR = 38.1

WALL 1 - 2ND STORY

Δ(WALL) = 0.018 - 0.008 + 0.028 = 0.038

R(WALL) = 1 / Δ(WALL) = 26.3

WALL 3 - 2ND STORY

(WALL 5 SIM.)

FOR THIS EXAMPLE, CONTROL JT. IS PROVIDED TO MAKE WALL MORE FLEXIBLE, THEREBY DISTRIBUTING MORE LOAD TO WALL 7

NOTE: SINCE ALL WALLS ARE THE SAME THICKNESS (i.e. 10") THE VALUES FROM FIG. 6-4 FOR 12" WALLS MAY BE USED FOR RELATIVE RIGIDITIES WITHOUT ADJUSTMENT.

Figure D–1. Continued.

RELATIVE RIGIDITIES
2ND STORY

WALL	PIER	H	D	H/D	△ FIG. 6-4	R	ΣR WALL
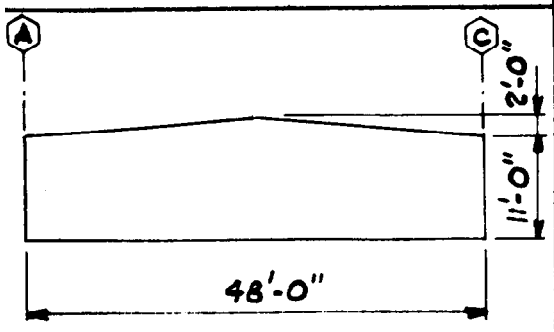 WALL 7 - 2ND STORY	1 CORNER CANT	12 AVE	48	0.25	0.018	55.5	55.5
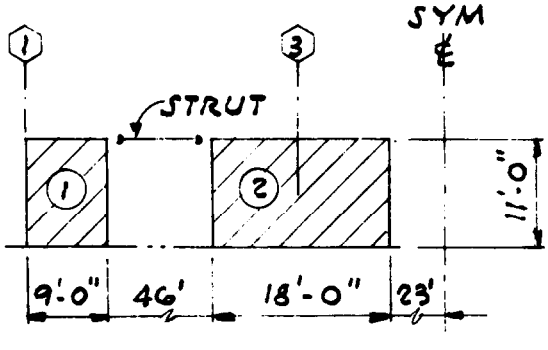 WALL C - 2ND STORY (WALL A - SIM.)	1, 4 CORNER CANT	11	9	1.22	0.22	4.5 x 2 PIERS 9.1	
	2, 3 RECT. CANT	11	18	0.61	0.075	13.3 x 2 PIERS 26.6	ΣR = 35.6

Figure D-1. Continued

RELATIVE RIGIDITIES

1ST. STORY WALLS

WALL	PIER	H	D	H/D	Δ FIG. 6-4	R	ΣR WALL
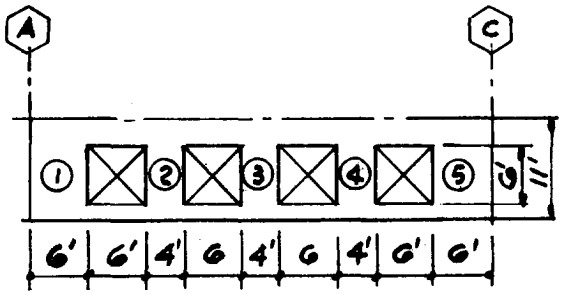	1 & 5 (CORNER CANT.)	6	6	1.0	0.09	11.1 × 2 PIERS = 22.2	
	2,3,4	6	4	1.5	0.22	45 × 3 PIERS = 13.5	
						ΣR = 35.7	
					Δ(1-5) = $\frac{1}{R}$ = 0.028		
WALL 1 1ST STORY	SOLID WALL (CORNER CANT.)	11'	48'	.23	0.017		
	SUBTRACT BAND @ 6' WINDOW (CORNER CANT.)		48'	0.125	⟨0.008⟩		
Δ(WALL) = 0.017 − 0.008 + 0.028 = 0.037					ΣΔ(WALL) = .037		ΣR = $\frac{1}{\Sigma\Delta W}$ = 27
$\Sigma R_{WALL} = \frac{1}{0.037} = 27$							
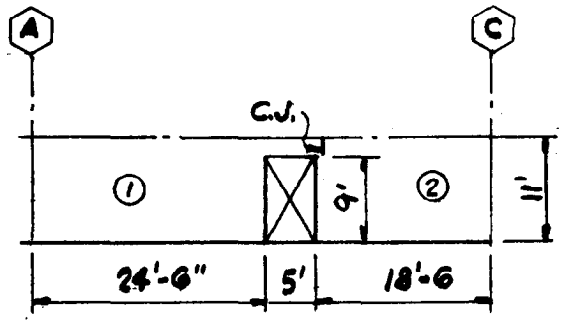	1 (CORNER CANT)	11'	24.5	0.45	0.037	27.0	
	2 (CORNER CANT.)	11'	18.5	0.59	0.056	17.9	
WALL 3 - 1ST STORY (WALL 5 - SIM.)						44.9	ΣR = 44.9

Figure D-1. Continued.

RELATIVE RIGIDITIES

1ST STORY WALLS

WALL	PIER	H	D	H/D	Δ FIG. 6-4	R	ΣR WALL
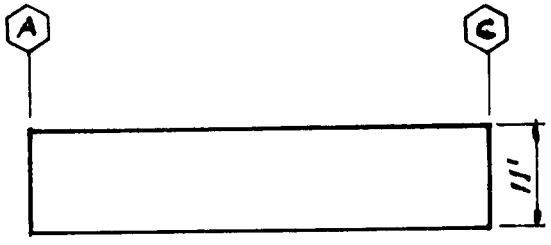 WALL 7 1ST. STORY	1 (CORNER CANT.)	11'	48'	0.23	.017	58.8	58.8
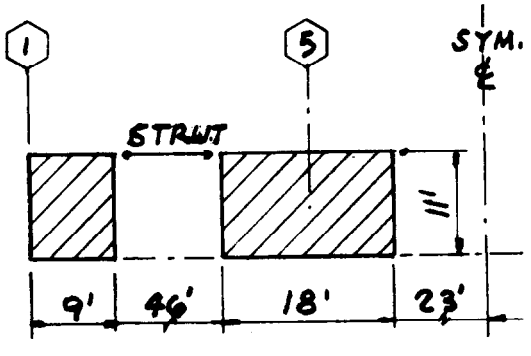 WALL C - 1ST STORY (WALL A SIM.)	1,4 (CORNER CANT.)	11'	9'	1.22	0.22	4.5 × 2 PIERS = 9.0	
	2.3 (RECT. CANT.)	11'	18'	0.61	0.075	13.3 × 2 PIERS = 26.6	ΣR = 35.6

Figure D-1. Continued

CENTER OF MASS AND CENTER OF RIGIDITY

ROOF DIAPHRAGM

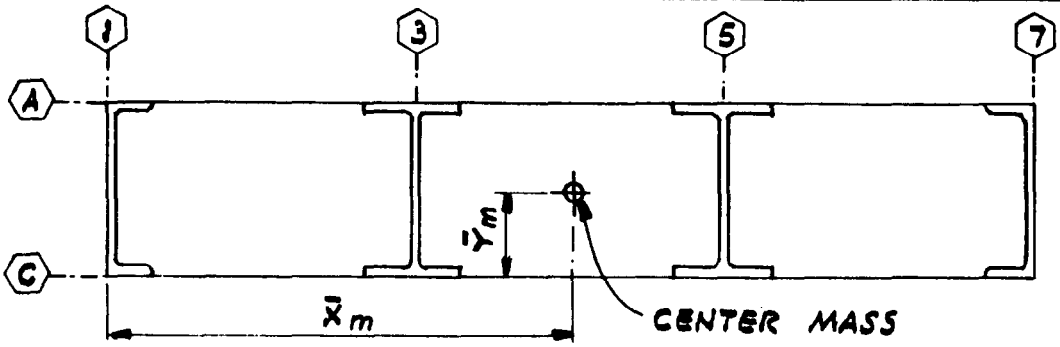

			CENTER OF MASS			CENTER OF RIGIDITY		
	X	Y	W (P.4)	W·Xm	W·Ym	RIGIDITY R	R·Xr	R·Yr
WALL 1	0.42'		93.5	39				
WALL 3	64		169	10816				
WALL 5	128		"	21632				
WALL 7	191.58		102	19541				
			533.5	52028				
WALL A		47.58	267		12704			
WALL C		0.42	"		112			
			534		12816			

CENTER OF MASS OF ROOF DIAPHRAGM:

$$\bar{X}_m = \frac{52028}{533.5} = 97.5 \qquad \bar{Y}_m = \frac{12816}{534} = 24'$$

CENTER OF RIGIDITY:

CALCULATIONS NOT REQUIRED SINCE ROOF DIAPHRAGM IS FLEXIBLE AND SEISMIC FORCES ARE DISTRIBUTED BY TRIBUTARY AREA.

CENTER OF MASS OF ROOF DIAPHRAGM IS REQUIRED SINCE THE ECCENTRICITY OF THIS MASS EFFECTS THE TORSIONAL FORCE ON THE RIGID 2ND FLOOR DIAPHRAGM BELOW.

Figure D-1. Continued.

CENTER OF MASS AND CENTER OF RIGIDITY
2ND FLOOR DIAPHRAGM

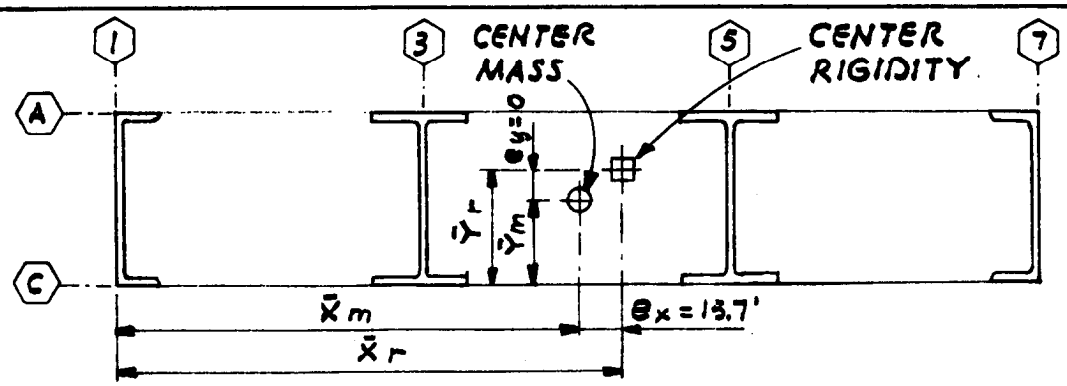

			CENTER OF MASS			CENTER OF RIGIDITY		
	X	Y	W (P.3)	W·Xm	W·Ym	RIGIDITY R (P.10)	R·Xr	R·Yr
WALL 1	0.42		188	79		27	11	
WALL 3	64		340	21760		44.9	2874	
WALL 5	128		"	43520		"	5747	
WALL 7	191.58		206	39465		58.8	11265	
			*1074	104824		175.6	19897	
WALL A		47.58	540		25693	35.6	NONE	1694
WALL C		0.42	"		227	"	NONE	15
			*1080		25920	71.2		1709

* TOTAL WTS. DO NOT CORRESPOND DUE TO ROUNDING OFF.

CENTER MASS: $\bar{X}_m = \frac{104824}{1074} = 97.6'$ CENTER RIGIDITY: $\bar{X}_r = \frac{19897}{175.6} = 113.3'$

$\bar{Y}_m = \frac{25920}{1080} = 24'$ $\bar{Y}_r = \frac{1709}{71.2} = 24'$

ECCENTRICITY OF ROOF MASS W/RESPECT TO 2ND FLR. CENTER RIGIDITY

$e_x = 113.3 - 97.5 = 15.8'$ (P.11) $e_y = 24' - 24' = 0$

ECCENTRICITY OF 2ND FLR MASS W/RESPECT TO 2ND FLR. CENTER RIGIDITY

$e_x = 113.3' - 97.6' = 15.7'$ $e_y = 24' - 24' = 0$

Figure D-1. Continued.

DISTRIBUTION OF SEISMIC FORCES

FROM ROOF DIAPHRAGM TO WALLS BELOW

THE ROOF DIAPHRAGM IS FLEXIBLE; THEREFORE THE FORCES ARE OBTAINED BY THE TRIBUTARY AREA METHOD. THE 100%g FORCES OF P.4 ARE SCALED IN PROPORTION TO THE 150K ROOF FORCE (P.6).

WALL	100%g	$F_R = 150$	WALL	100%g	$F_R = 150$
1	94	26.4	A	267	75
3	169	47.5	C	267	75
5	169	47.5			
7	102	28.6			
	534K	150K			

FROM SECOND FLOOR DIAPHRAGM TO WALLS BELOW

THE SECOND FLOOR DIAPHRAGM IS RIGID; THEREFORE IT REDISTRIBUTES FORCES FROM THE SECOND FLOOR AND ABOVE.

N-S DIRECTION P.6 P.12 P.6 P.12

$$M_T = \Sigma F_x e_x = \underset{\text{ROOF}}{150^K \times 15.8'} + \underset{\text{2ND}}{150} \times 15.7 = 4725^{K'}$$

$$M_A = 300^K \times (0.05 \times 192') = 2880^{K'}$$

E-W DIRECTION

$$M_T = 0$$

$$M_A = 300 \times (0.05 \times 48) = 720^{K'}$$

Figure D-1. Continued.

DIAGRAM SHOWING DIRECT SHEAR AND TORSIONAL SHEAR FORCES IN PLAN

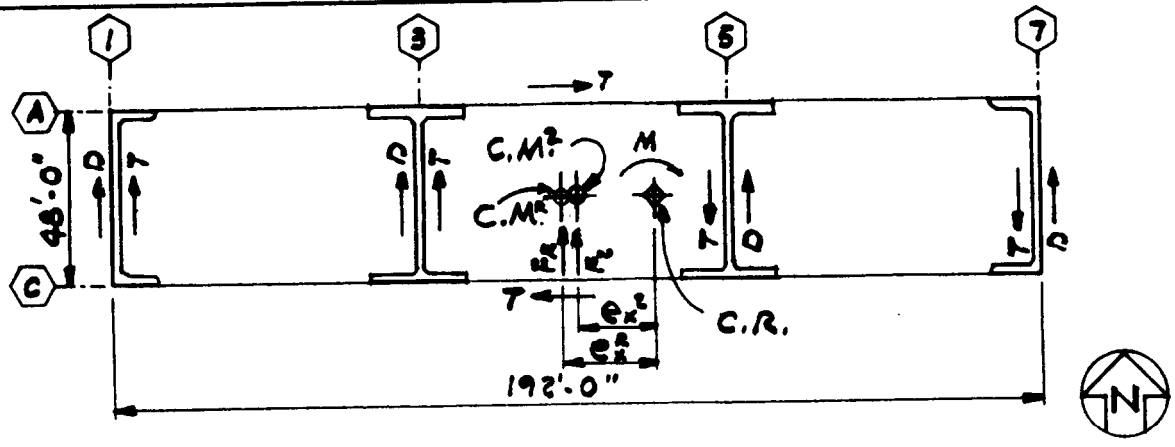

NOTES:

C.R. = CENTER OF RIGIDITY
C.M. = CENTER OF MASS
T = TORSIONAL SHEAR FORCE
D = DIRECT SHEAR FORCE
F_R = FORCE FROM ROOF DIAPH (N-S)
F_2 = FORCE FROM 2ND DIAPH (N-S)
e_x^R = ECCENTRICITY OF ROOF MASS W/ RESPECT TO 2ND FLR C.R
e_x^2 = " " 2ND FLR " " " " " "
M_T = TORSIONAL MOMENT
M_A = ACCIDENTAL TORSION
$M = M_T + M_A$

$$V_D = \frac{K}{\Sigma K} V$$

$$V_T = \frac{Kd^2}{\Sigma Kd^2} \cdot \frac{M_T}{d} = \frac{Kd}{\Sigma Kd^2} \cdot M_T$$

$$V_A = \frac{Kd^2}{\Sigma Kd^2} \cdot \frac{M_A}{d} = \frac{Kd}{\Sigma Kd^2} \cdot M_A$$

Figure D-1. Continued.

DISTRIBUTION FROM SECOND FLOOR DIAPHRAGM TO WALLS BELOW — CONTINUED

N–S DIRECTION										
WALL	K	$\frac{K}{\Sigma K}$	V_D	d	d^2	Kd^2	$\frac{kd}{\Sigma kd^2}$	V_T	V_A	V_W
1	27.0	.154	46.2	112.9	12,746	344,142	.00353	16.7	10.2	73.1
3	44.9	.256	76.8	49.3	2,430	109,107	.00256	12.1	7.4	96.3
5	44.9	.256	76.8	14.7	216	9,698	.00076	− 3.6	2.2	75.4
7	58.8	.334	100.2	78.3	6,131	360,503	.00533	−25.2	15.4	90.4
	175.6		300							
A	35.6	.500	—	23.6	557	19,829	.00097	4.6	2.8	7.4
C	35.6	.500	—	23.6	557	19,829	.00097	4.6	2.8	7.4
	71.2					863,108				

E–W DIRECTION										
1			—					—	2.5	2.5
3			—					—	1.8	1.8
5			—					—	0.5	0.5
7			—					—	3.8	3.8
A			150					—	0.7	150.7
C			150					—	0.7	150.7
			300							

Figure D-1. Continued.

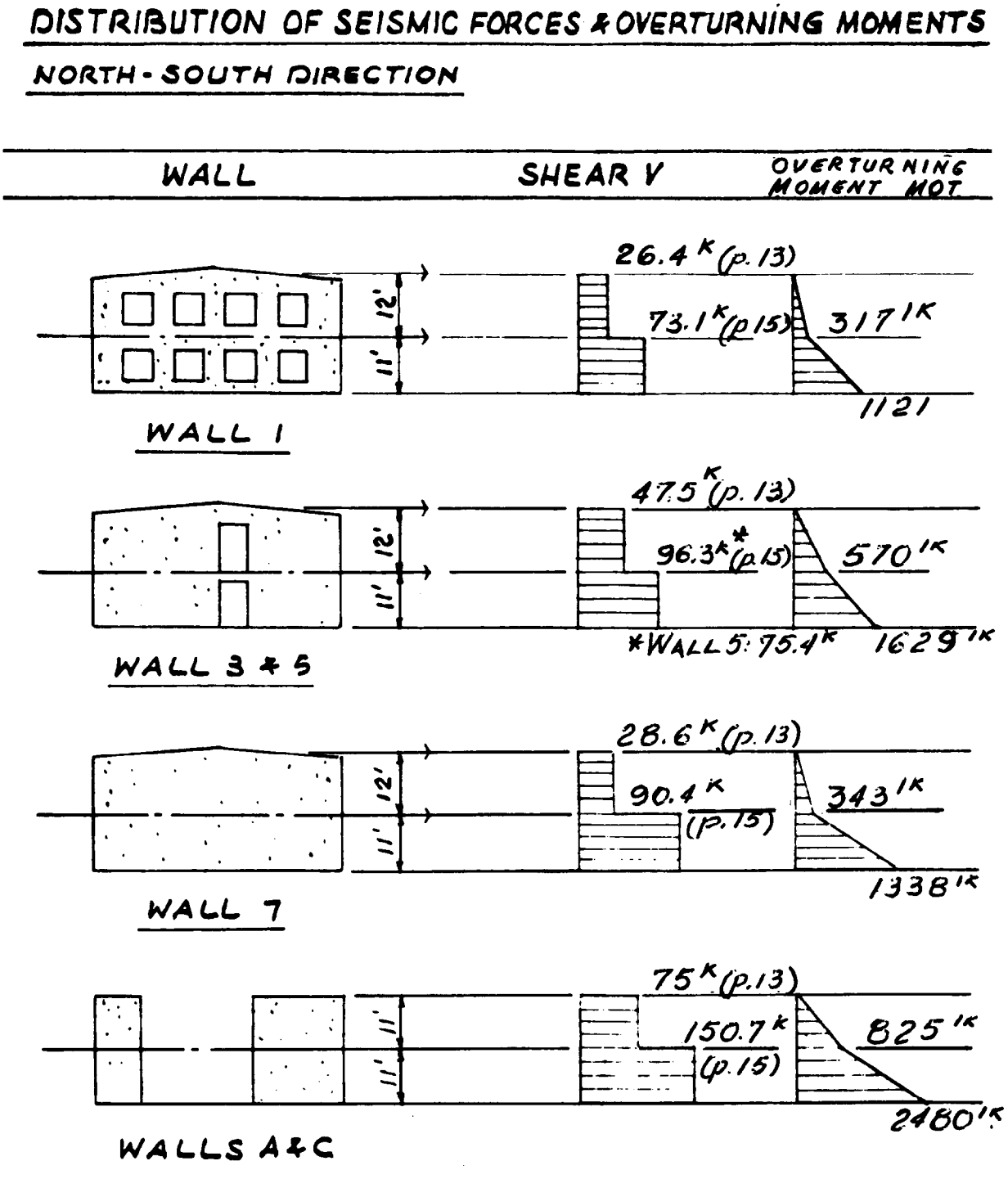

Figure D-1. Continued.

VERTICAL LOAD DESIGN

THESE CALCULATIONS ARE EXTRACTED FROM THE VERTICAL LOAD CALCULATION WHICH ARE REQUIRED FOR COMBINING WITH LATERAL LOADS.

WALL	DEAD LOAD	LIVE LOAD
1	(p. 2) ROOF 24.5 #/□' x 16' = 391 #/' (LESS GIRDER + COL.) WALL 125 #/□' x 12' AV'G = 1500 LESS WALL OPEN'G $4 \times 6' \times 6' \times \frac{125}{48'}$ #/□' = <-375> ABOVE 2ND 2ND FLR. 73 #/□' x 16' = 1168 (LESS GIRDER + COL.) WALL 125 #/□' x 11 = 1375 LESS OPEN'G = <-375> 3684 #/' FDN. WALL 125 # x 1.5' = 188 FTG. (ASSUME 2.5 WIDE) = 563 TOTAL DEAD = 4435 #/'	ROOF 20 # x 16' = 320 #/' 2ND FLR. 50 # x 16' = 800 TOTAL LIVE = 1120 #/'

FOOTING WIDTH REQ'D = $\frac{4435 + 1120}{3000 \text{ PSF}} = 1.85$ TRY 2'-6" x 18' CONT. FTG.

NOTE: FOOTING WIDTH TO BE CHECKED FOR SEISMIC LOAD

Figure D–1. Continued.

VERTICAL LOAD DESIGN

WALL	DEAD LOAD	LIVE LOAD
7	(p. 2) ROOF 24.5#/□'x16' = 391#/' (LESS GIRDER + COL.) WALL 125#/□'x12' AVG. = 1500#/' 1891#/'	ROOF 20#x16' = 320#/'
	2ND FLR 73#/□'x16' = 1168#/' (LESS GIRDER + COL.) WALL 125#/□'x11' = 1375#/'	2ND FLR. 50#x16' = 800#/'
	FDN WALL 125#/□'x1.5' = 188#/'	
	FTG. (ASSUMED 2.75' WIDE = 619#/' TOTAL DEAD = 5241#/'	TOTAL LIVE = 1120#/'

FOOTING WIDTH REQ'D = $\frac{5241 + 1120}{3000\,PSF}$ = 2.12'

TRY, 2'-9"x 18" CONT. FTG.

Figure D-1. Continued

VERTICAL LOAD DESIGN

WALL	DEAD LOAD	LIVE LOAD
3 (WALL 5 SIM)	(p.2) ROOF 24.5#/□' x 32' = 784#/'	ROOF 20#/□' x 32' = 640#/'
	WALL 125#/□' x 12' AVG. = 1500	
	LESS WALL OP'N'G 5' x 9' x $\frac{125}{48'}$ = <-117>	
	2167	
	(p. 2) 2ND FLR 73#/□' x 32' = 2336	2ND FLR 50#/□' x 32' = 1600#/'
	WALL 125#/□' x 11' = 1375	
	LESS OPEN'G = <-117>	
	5761#/'	
	FDN WALL 125#/□' x 1.5' = 188#/'	
	FTG. (ASSUME 3' WIDE) = 675#/'	
	TOTAL DEAD = 6624#/'	TOTAL LIVE = 2240#/'

FOOTING WIDTH REQ'D = $\frac{6624 + 2240}{3000 psf}$ = 2.96'

TRY 3'x0" x 18" CONT. FTG.

Figure D-1. Continued.

WALL	DEAD LOAD	LIVE LOAD
A (9' PIER) (WALL C SIM.)	(p. 2) ROOF 24.5#/□'×16'×3' = 1176# WALL 125#/□'×9'×11' = 12375# 13551# WT/FT = 13551/9 = 1506#/' 2ND FLR 73.0#/□'×16'×3' = 3504# WALL = 12375# 29430# WT/FT = 29430/9' = 3270#/' TOTAL DEAD (EXCL. FTG.) = 29430#	ROOF 20#/□'×16'×3' = 960# 2ND FLR 50#/□'×16'×3' = 2400# WT/FT = 2400/9' = 270#/' TOTAL LIVE = 3360#
	ALLOW SOIL PRESS. = 3000 psf − (300 psf WT FTG) = 2700 psf AREA REQ'D = (29430 + 3360)/2700 = 12.1 □'	TRY, 8'-0"×20'-0" FTG. REQ'D FOR SEISMIC OVERTURNING. A = 160 □'
18' PIER	ROOF 24.5#/□'×32'×3' = 2352# WALL 125#/□'×18'×11' = 24750# 27102# WT/FT = 27102/18 = 1506#/' 2ND FLR 73#/□'×32'×3' = 7008# WALL = 24750# 58860# WT/FT = 58860/18 = 3270#/' TOTAL DEAD (EXCL. FTG.) = 58860#	ROOF 20#/□'×32'×3' 1920# 2ND FLR 50#/□'×32'×3' = 4800# TOTAL LIVE = 6720#
	ALLOW SOIL PRESS. = 2700 psf AREA REQ'D = (58860 + 6720)/2700 = 24.3 □'	TRY, 8'-0"×31'-0" FTG. REQ'D FOR SEISMIC OVERTURNING A = 248 □'

Figure D-1. Continued

WALL DESIGN

WALL 1

$U = 1.4(D+L+E)$

$U = 0.9D + 1.4E$

$v = 2\sqrt{f'_c} = 126$ PSI

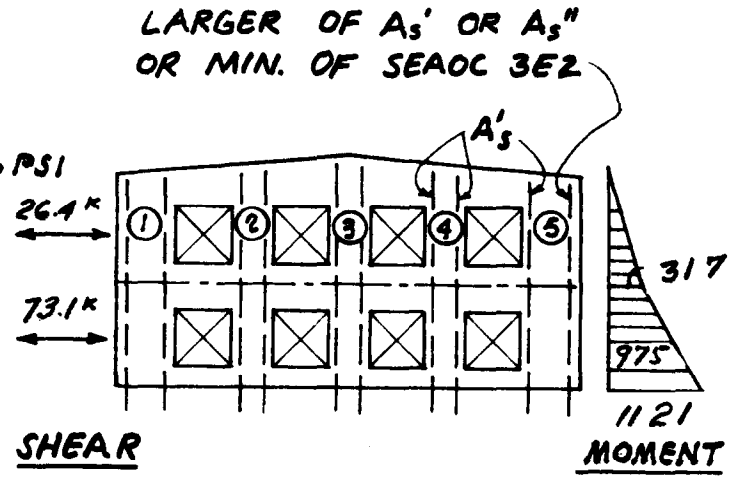

THE INDIVIDUAL PIERS IN WALL 1 SHOULD BE DESIGNED FOR THE BENDING MOMENT DUE TO THE LATERAL LOAD ($M = V \times h/2$) PLUS THE AXIAL LOADS FROM DEAD AND LIVE LOADS (EXCEPT ROOF L.L.) PLUS THE AXIAL LOAD DUE TO WALL OVERTURNING. UNLESS AXIAL LOADS ARE EXCEPTIONALLY LARGE IT IS USUALLY CONSERVATIVE TO NEGLECT AXIAL LOADS. THIS PROBLEM PROCEEDS ON THIS SIMPLIFYING ASSUMPTION.

SEE NEXT SHT. FOR SAMPLE CALCULATION — FIRST STORY

	PIER	WIDTH	R (P.9)	V	A_c	$v = \frac{1.4V}{\phi A_c}$	$M = V\frac{h}{2}$	A'_s	$1.33A'_s$	REINF.
1ST STORY	1	72"	11.1	22.7	720 □"	74	68.1	0.46 □"	0.61	2-#5
	2	48"	4.5	9.2	480	45	27.6	0.28	0.37	2-#5
	3	48"	4.5	9.2	480	45	27.6	0.28	0.37	2-#5
	4	48"	4.5	9.2	480	45	27.6	0.28	0.37	2-#5
	5	72"	11.1	22.7K	720	74	68.1	0.46	0.61	2-#5
			Σ=35.7	Σ=73.1K (P.15)		ϕ=0.6	h/2=3'		NOTE 1	

NOTE: 1. A'_s INCREASED BY 1/3 PER ACI # 10.5.2
2. MIN. REINF. 2-#5 PER FIG. 6-6
3. REINF. FOR 1ST STORY PIERS IS EXTENDED TO THE 2ND STORY

Figure D-1. Continued.

WALL DESIGN (CONT.)

WALL 1

SAMPLE CALCULATION FOR SHT. 21:

1ST STORY - PIER 1

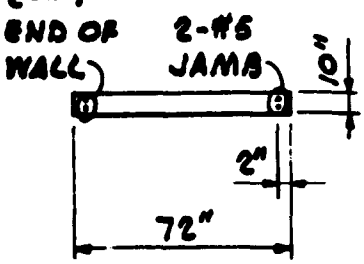

PLAN - PIER 1

SHEAR IN PIER 1

$$V_1 = \frac{R}{\Sigma R} \times V_{WALL} = \frac{11.1}{35.7} \times 73.1^{k} = 22.7^{k}$$ (P.9) (P.15)

$$V_u = 1.4 \times V_1 = 31.8^{k}$$

$$v = \frac{V_u}{\phi A_c} = \frac{31.8}{0.60 \times 720} = 74 \text{ PSI} < 126 \text{ PSI} \quad \text{OK}$$

MOMENT IN PIER 1 DUE TO PIER SHEAR

$$M = V_1 \times \frac{h}{2} = 22.7 \times \frac{6'}{2} = 68.1$$

$$M_u = 1.4M = 1.4 \times 68.1 = 95.3'^{k}$$

$$\text{REQ'D } A_s' = \frac{M_u}{\phi f_y (d - \frac{a}{2})} = \frac{95.3 \times 12}{0.9 \times 40 \times (70 - \frac{1.0}{2})} = 0.46 \text{ □''}$$

WHERE a IS ASSUMED AS 1.0

CHECK ASSUMPTION:

$$a = \frac{A_s f_y}{0.85 f_c' b_w} = \frac{0.40 \times 40}{.85 \times 4 \times 10} = 0.47 < 1.0 \text{ ASSUMED} \quad \therefore \text{ OK}$$

SEE SHT. 23 FOR BOUNDARY MEMBERS

Figure D-1. Continued.

WALL DESIGN

WALL 1 (CONT.)

BOUNDARY MEMBER FOR ENTIRE WALL

GRAVITY LOADS (p. 17)

$W_D = 3684\ \#/1 \times 48' = 177^K$

$W_L = 800\ \#/1 \times 48' = 38^K$ (2ND FLOOR ONLY)

OVERTURNING MOMENT (p.16)

$M_{OT} = 1121$

USE LOAD COMBINATION 0.9D − 1.4E

LOAD AT EACH END =

$$F = C_D - T_M = \frac{0.9 W_D}{2} - \frac{1.4 M_{OT}}{0.9 D}$$

$$= \frac{0.9(177)}{2} - \frac{1.4(1121)}{0.9(48')} = 79.7 - 36.3$$

SINCE $C_D > T_M$ THERE IS NO TENSION.

PROVIDE TRIM REINF. =

$$A_s'' = \frac{T_M}{\phi f_y} = \frac{36.3}{0.9 \times 40} = 1.01\ IN^2$$

2 − #7 AT EACH END OF WALL

Figure D-1. Continued

WALL DESIGN

WALL 3 (WALL 5 SIM.)

ASSUME THAT PIERS ACT AS SERIES OF VERTICAL CANTILEVER BEAMS STRUTTED AT ROOF & 2ND FLR. LINE & FIXED AT 1ST FLR.

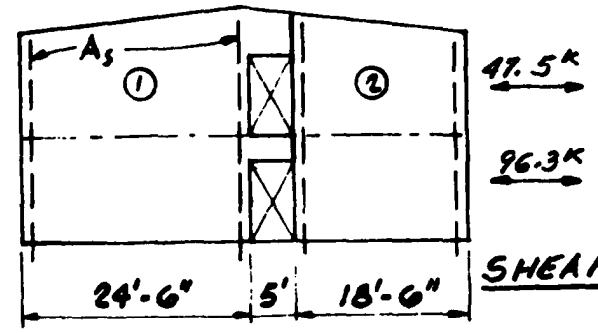

	PIER	WIDTH	R (P.9)	V	A_c	$v = \frac{1.4V}{\phi A_c}$	M_{OT}	A_s *	REINF.
1ST STORY	1	24.5'	27	57.9K	2940 □"	46 PSI	980 'K	2.07 □"	2-#9
	2	18.5'	17.9	38.4	2220	40	649	1.81	2-#9
			Σ=44.9	Σ=96.3K (P.16)		ϕ=0.6	Σ=1629 'K (P.16)		

WALL 7

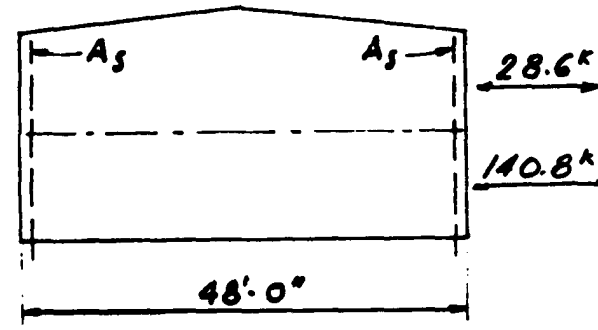

	PIER	WIDTH	R (P.10)	V	A_c	$v = \frac{1.4V}{\phi A_c}$	M_{OT}	A_s *	REINF
1ST STORY	1	48'	58.8	140.8K	5760	57 PSI	1892 (P.16)	2.04	2-#9
						ϕ=0.6			

* INCREASED BY 1/3 PER ACI ¶ 10.5.2

Figure D–1. Continued.

WALL DESIGN

WALL A (WALL C SIM.)

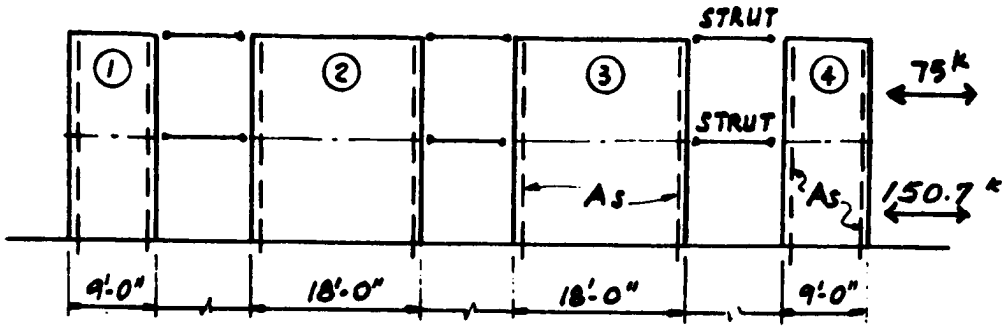

	PIER	WIDTH	R (p/o)	V	Ac	$v = \frac{1.4V}{\phi A_c}$	M_{OT}	As	
1ST. STORY	1	9'	4.5	19.0k	1080	41 psi	314	1.82	2-#9
	2	18'	13.3	56.3	2160	61	928	2.67	3-#9
	3	18'	13.3	56.3	2160	61	928	2.67	3-#9
	4	9'	4.5	19.0	1080	41	314	1.82	2-#9
			Σ 35.6	Σ 150.7k (p/c)		$\phi = 0.6$	Σ 2483'k (p/k)		

SAMPLE CALCULATION FOR PIER (1) :

SHEAR $V = \frac{R}{\Sigma R} V_{WALL} = \frac{4.5}{35.6} \times 150.7 = 19.0^k$

$V_u = 1.4V = 1.4 \times 19.0^k = 26.6^k$

$v = \frac{1.4V}{\phi A_c} = \frac{V_u}{\phi A_c} = \frac{26.6}{0.6 \times 1080} = 41 \text{ psi} < 126 \text{ psi}$ OK

MOMENT $M_1 = \frac{R}{\Sigma R} M_{OT} = \frac{4.5}{35.6} \times 2483'^k = 314$

$M_u = 1.4 M_1 = 1.4 \times 314 = 440'^k$

$A_s = \frac{M_u}{\phi f_y (d - \frac{a}{2})} = \frac{440 \times 12}{0.9 \times 40 \times (108" - \frac{2}{2})} = 1.37^{\square"}$

$A_s = 1.33 \times 1.38 = 1.82^{\square"}$ INCREASE PER ACI # 10.5.2

Figure D–1. Continued.

WALL DESIGN

WALL A – CONT. (WALL C SIM.)
BOUNDARY MEMBER – PIER 1

$M_u = 440^{k'}$ (p. 25)

$W_D = 29.4^k, \quad W_L = 2.4^k$ (p. 20)

$C_D = \frac{0.9 W_D}{2} \quad \frac{0.9 \times 29.4}{2} = 13.2$

$T_M = \frac{M_u}{0.9d} = \frac{440}{0.9(9)} = 54.3$

$T = T_M - C_D = 54.3 - 13.2 = 41.1 = \phi A_s'' f_y$

$A_s'' = \frac{41.1}{0.9 \times 40} = 1.14 \text{ IN.}^2 < A_s$ p. 25

CHECK TRANSV. REINF. (ACI 21.5.3.1)

WALL A = $10' \times 9/12 = 7.5 \text{ ft.}^2$

$S = td^2/6 = \frac{10}{12} \frac{(9)^2}{6} = 11.2 \text{ ft.}^3$

$M = M_u = 440^{k'}$

$P = 1.4 (W_D + W_L) = 1.4 (29.4 + 2.4) = 44.5^k$

$f = \frac{P}{A} + \frac{M}{S} = \frac{44.5}{7.5} + \frac{440}{11.2} = 45.2 \text{ ksf}$

OR 314 psi $< (0.2 f_c' = 800 \text{ psi})$

NO TRANSV. REINF. REQ'D

Figure D–1. Continued.

WALL DESIGN

WALL A-CONT. (WALL C SIM.)

BOUNDARY MEMBER - PIER 2

$M_r = 928, \quad M_u = 1.4 \times 928 = 1299$

$W_D = 58.9 \quad W_L = 4.8$

$$C_D = \frac{0.9 W_D}{2} = \frac{0.9 \times 58.9}{2} = 26.5$$

$$T_M = \frac{M_u}{0.9d} = \frac{1299}{0.9 \times 18'} = 80.2$$

$$T = 80.2 - 26.5 = 53.7$$

$$A_s'' = \frac{53.7}{0.9 \times 40} = 1.49 < A_s$$

CHECK TRANSV. REINF.

$$\text{WALL } A = 18' \times \frac{10}{12} = 15 \text{ ft.}^2$$

$$S = \frac{10}{12} \times \frac{(18)^2}{6} = 45 \text{ ft.}^3$$

$$P = 1.4\,(58.9 + 4.8) = 89.2^k$$

$$M_u = 1299$$

$$f = \frac{89.2}{15} + \frac{1299}{45} = 6.0 + 28.9 = 34.9 \text{ ksf}$$

OR 242 psi < 800

NO TRANSV. REINF. REQ'D

Figure D–1. Continued.

WALL DESIGN - SEISMIC FORCES NORMAL TO WALL

$F_p = Z I C_p W_p$

WHERE $C_p = 0.75$ (SEAOC TABLE 1-H)

$W_p = 125^{\#}/\square'$ (10" CONC)

$Z = 0.4$ $I = 1.0$

$F_p = F_p = 0.4 \times 1.0 \times 0.75 \times 125 = 37.5^{\#}/\square'$

REACTION @ ROOF $= 37.5^{\#}/' \times 11'/2 = 206^{\#}/'$

REACTION @ 2ND FLR $= 37.5^{\#}/' \times 11' \times \frac{10}{8} = 516^{\#}/'$ (CONT. SPAN)

MIN. LOAD $= 200^{\#}/'$ (SEAOC 1H2h)

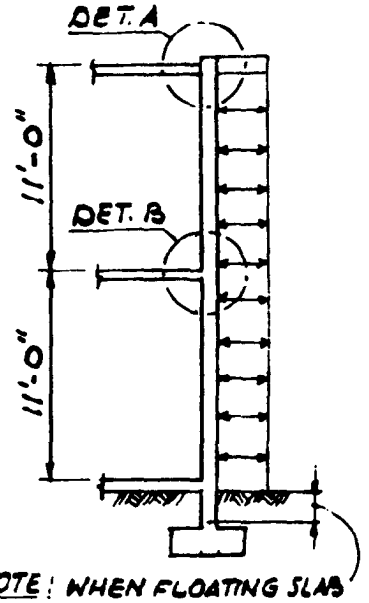

NOTE: WHEN FLOATING SLAB IS USED, ASSUME PT. OF FIXITY 2' BELOW GRADE LINE FOR DESIGN OF WALL

MAX. WALL BENDING @ 2ND FLR LINE

16' TRIB TO LINES 1 OR 7

$$M = \frac{wl^2}{8} + \frac{M_{ecc}}{2}$$

$$= \frac{37.5^{\#} \times 11^2 \times 12}{8} + \frac{(73^{\#} + 50^{\#}) \times 16 \times 5''_{ecc}}{2}$$

$$= 6806 + 4920 = 11{,}726^{\#''}$$

ASSUME $a = 0.1''$

$$A_s = \frac{M}{\phi f_y (d - \frac{a}{2})} = \frac{11.73^{''K}}{0.9 \times 40 (8.5 - \frac{0.1}{2})}$$

$$= 0.039^{\square''}$$

CHECK ASSUMED $a = 0.1$

$$a = \frac{A_s f_y}{0.85 f'_c b} = \frac{0.039 \times 40}{0.85 \times 4 \times 10} = 0.05 < 0.1 \text{ OK}$$

MIN. $A_s = .0025\, bd$

$= .0025 \times 10 \times 8.5 = 0.21^{\square''}$

USE #4 @ 16" O.C. E.F.

$A_s = 0.30$

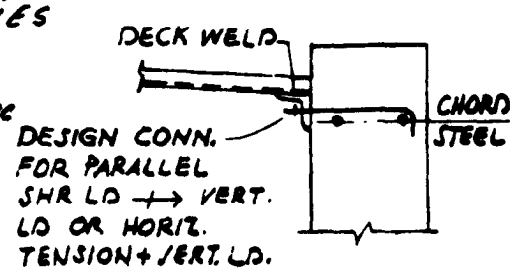

DETAIL A

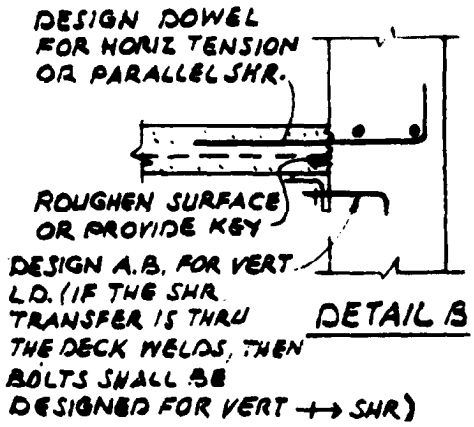

DETAIL B

Figure D-1, Continued.

FOOTING DESIGN FOR SEISMIC LOADS

WALL 1

MOMENT OF INERTIA OF FTG.:

FOR VERTICAL LOAD $I_1 = 2.5' \times \frac{48^3}{12} = 23040\ FT^4$

FOR SEISMIC LOAD $I_2 = \frac{2.5' \times 38^3}{12} + 2 \times 8' \times 10' \times 23^2$
INCLUDE RETURN WALL FTGS. $= 96072\ FT^4$

AREA OF FTG. $= 2.5' \times 54' = 135\ \square'$

WEIGHT (p.17)

$W_1 = (3684\ \#/\square') \times 48' = 176\,832\ \#$ (DEAD)

$W_1 = (800\ \#/\square') \times 48' = 38400\ \#$ (LIVE W/O ROOF L.L.)

$W_{FTG} = (751\ \#/\square' \times 48' = 36000$

ΣW (DEAD) $= 212\,832$

ΣW (LIVE) $= 38400$

OVERTURNING MOMENT @ BASE OF FTG.

$M_{OT} = \underset{\text{(p.21)}}{1121\ ^{'K}} + \underset{\text{(p.21)}}{73.7^K} \times 3' = 1340\ ^{'K}$

SOIL PRESSURE		MAX.	MIN.
P/A (DEAD)	$\frac{212\,800}{135}$	+ 1576	+ 1576
P/A (LIVE)	$\frac{38400}{135}$	+ 284	
$M_{OT}C$	$\frac{1340 \times 27'}{96072}$	+ 377	-377
		2237< 4000	1199 NO UPLIFT

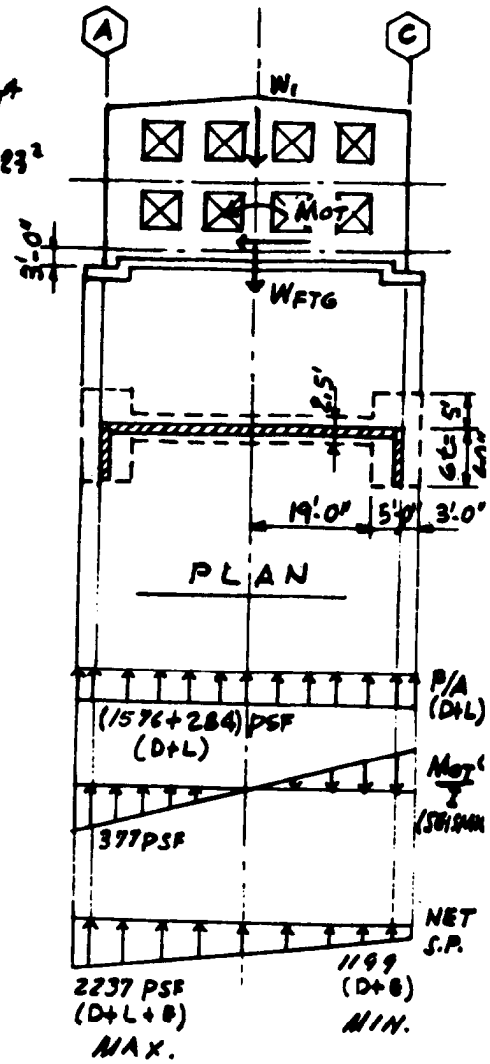

NOTE: THE SOIL PRESSURE UNDER THE RETURN WALLS DUE TO OVERTURNING (377 PSF) IS ADDED TO THE SOIL PRESSURE UNDER THE RETURN WALL WHICH IS VERY LOW ∴ OK

Figure D-1. Continued.

FOOTING DESIGN FOR SEISMIC LOADS

WALL 7

MOMENT OF INERTIA OF FTG:

FOR VERTICAL Ld $I_1 = \frac{2.75 \times 48^3}{12} = 25344\ FT^4$

FOR SEISMIC Ld $I_2 = \frac{2.75 \times 38^3}{12} + 2 \times 8' \times 10' \times 23^2$

$= 97215\ FT^4$

AREA OF FTG $= 2.75' \times 54' = 148.5^{\square'}$

WEIGHT (p.16)

$W_1 = (4434\ \#/' \times 48' = 212\,832^{\#}$ (DEAD)

$W_1 = (800\ \#/' \times 48' = 38400$ (LIVE W/o ROOF L.L.)

$W_{FTG} = (806\ \#/' \times 48' = 38736$

ΣW (DEAD) $= 251\,568^{\#}$

ΣW (LIVE) $= 38400$

OVERTURNING MOMENT AT BASE OF FTG.

$M_{OT} = 1892$ (p.16) $+ 140.8^{K} \times 3' = 2314'^{K}$

SOIL PRESSURE		MAX	MIN.
P/A (DEAD)	$\frac{160788}{148.5}$	+ 1694	+ 1694
P/A (LIVE)	$\frac{38400}{148.5}$	+ 259	
$\frac{M_{OT}C}{I_2}$	$\frac{2314 \times 27}{86212}$	+ 643	− 643
		+ 2596	+ 1051
		< 4000	NO UPLIFT

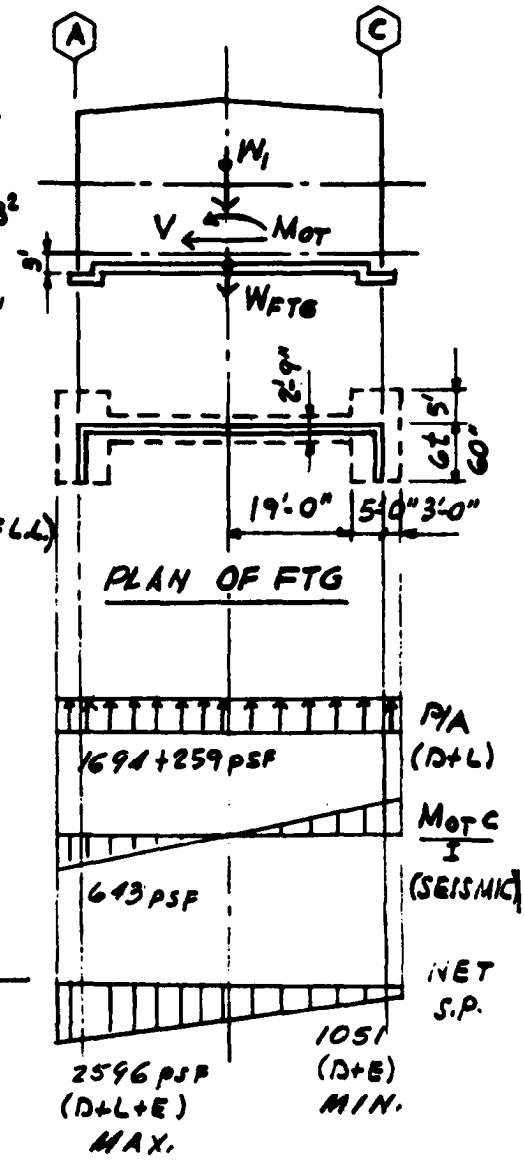

Figure D-1. Continued.

FOOTING DESIGN FOR SEISMIC LOADS

WALL 3 (WALL 5 SIM.)

MOMENT OF INERTIA OF FTG:

FOR VERTICAL LD $I_1 = \frac{3 \times 48^3}{12} = 27648\ FT^4$

FOR SEISMIC LD $I_2 = \frac{3 \times 38^3}{12} + 2 \times 8' \times 7.5 \times 23^2$

$= 77200\ FT^4$

AREA OF FTG. $3' \times 54' = 162\ \square'$

OVERTURN'G MOMENT $= 1629\ ^{'K}$ (p. 16)

SHEAR V $= 96.3^K$ (p. 16)

OVERTURN'G MOMENT @ BASE OF FTG.

$M_{OT} = 1629\ ^{'K} + 96.3^K \times 3 = 1918\ ^{'K}$

CALCULATION OF ECCENTRIC MOMENT (P_e) OF WALL MASS RESPECT TO N.A.

WEIGHTS (p. 19)	X	DIST. TO N.A. FTG	= WX
W_1 (DEAD) $= 5761\ ^{\#}/'$ (24.5' + 2.5')	= 155 547#	× −11.75	= −1,827,677 '#
W_1 (LIVE) $= 1600\ ^{\#}/'$ (24.5' + 2.5')	= 43200	× −11.75	= −507600
W_2 (DEAD) $= 5761\ ^{\#}/'$ (18.5' + 2.5')	= 120 981	× +14.75	= 1,784,470
W_2 (LIVE) $= 1600\ ^{\#}/'$ (18.5' + 2.5')	= 33600	× +14.75	= 495600
$W_{FTG} = 863\ ^{\#}/' \times 48'$	41400	× 0	= 0

ΣW (DEAD) $= 317,928^{\#}$ ΣW(DEAD) $- 43\,207^{\#}$

ΣW (LIVE) $= 76800^{\#}$ ΣW(LIVE) $- 12000^{\#}$

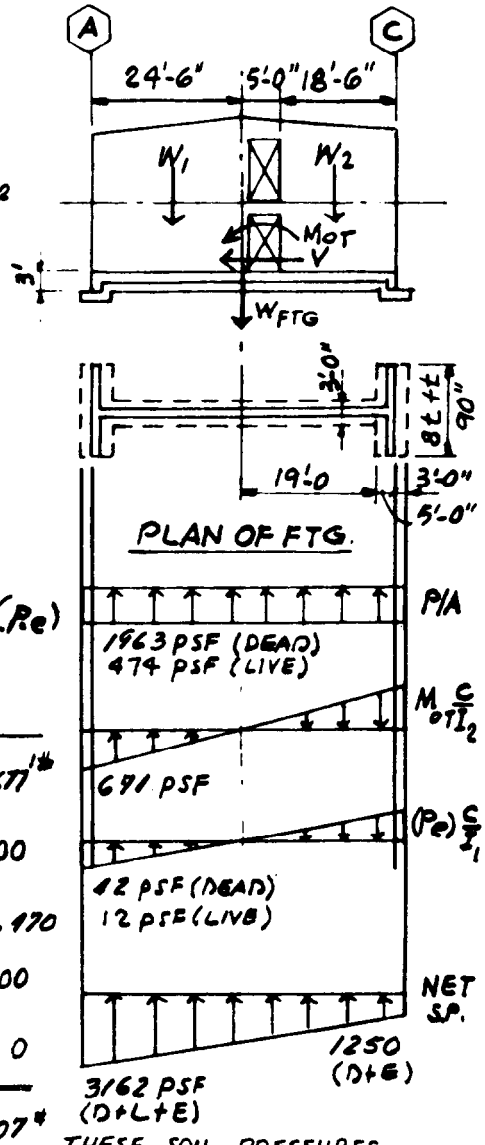

THESE SOIL PRESSURES ARE CALCULATED ON THE NEXT PAGE

ECCENTRICITY $e = \frac{-43207\ ^{\#'}}{317928^{\#}} = -0.14'$ (DEAD)

$e = \frac{-12000}{76800} = -0.156'$ (LIVE)

NOTE: THESE ARE SMALL, THE EFFECTS COULD BE NEGLECTED.

Figure D-1. Continued.

FOOTING DESIGN FOR SEISMIC LOADS

WALL 3 (CONT.) (WALL 5 SIM)

SOIL PRESS. PSF		MAX.	MIN.
$\frac{P}{A}$ (DEAD)	$\frac{317,928}{162}$	+1963	+1963
$\frac{P}{A}$ (LIVE)	$\frac{76800}{162}$	+474	
$M_{OT}\ \frac{C_2}{I_2}$	$\frac{1918 \times 27}{77200}$	+671	−671
$M_{ecc}\ \frac{C_1}{I_1}$ (DEAD)	$\frac{43207 \times 27}{27648}$	+42	−42
$M_{ecc}\ \frac{C_1}{I_1}$ (LIVE)	$\frac{12000 \times 27}{27648}$	+12	

$3162 < +1250$

4000 NO UPLIFT

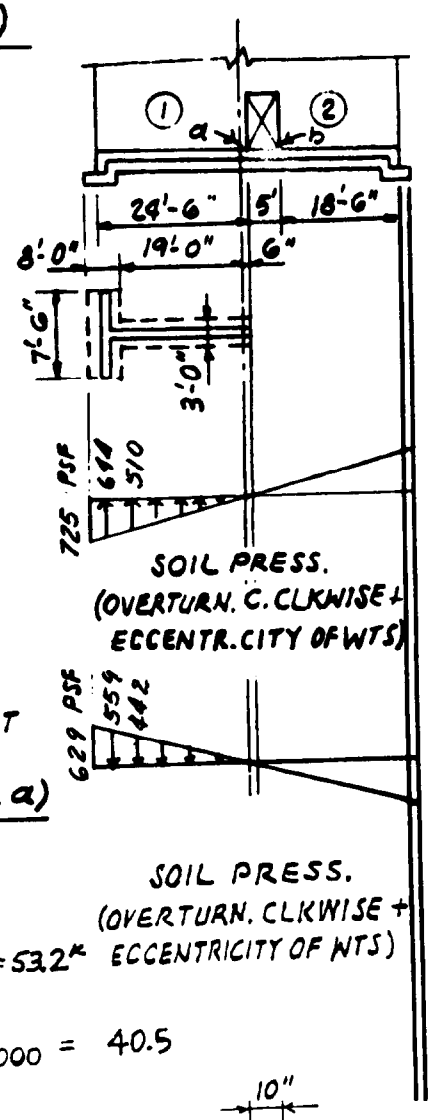

CHECK SHEAR IN FDN. WALL @ DOOR OP'N'G (PL a)

DL + LL $W = 5' \times 3' (1.963 + 0.474) = 36.6^k$

$V = 36.6/2 = 18.3^k$

SEISMIC (CCW OVERTURNING)

$V = (510 \times \frac{19'}{2} \times 3') + (644 \times 8' \times 7.5') = 53.2^k$

$V_u/\phi = \frac{1}{0.60}(18.3 + 53.2) = 119^k$

$V_c = 2\sqrt{f_c'}\ bd = 2\sqrt{4000} \times 10 \times 32/1000 = 40.5$

$V_s = 119 - 40.5 = 78.5$

$V_s < 8\sqrt{f_c'}\ bd = 162$ OK

PROVIDE # 4 [@ 6" OK

$V_s = \frac{0.40 \times 40 \times 32}{6} = 85.3 > 78.5$

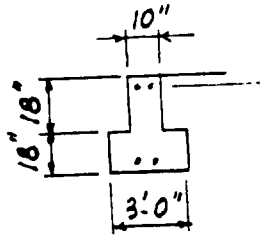

SECTION

Figure D-1. Continued.

FOOTING DESIGN FOR SEISMIC LOADS

WALL 3 (CONT.)

CHECK MOMENT IN FDN WALL @ DOOR OP'N'G (Pt. a)

$M_{D+L} = \frac{WL}{10} = \frac{36.6 \times 5}{10} = 18.3^{'K}$

$M_{OT}(\text{PIER } 1') = \Sigma M_{OT}$

$= \frac{27}{44.9} \times 1918^{'K} = 1153^{'K}$

RIGIDITIES, P.24

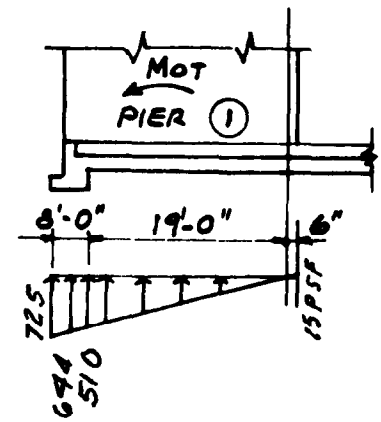

MOMENT AT Pt a (SEISMIC)

$M_a = 1153^{'K} - \left[(510 \times \frac{19}{2} \times 3' \text{WIDE}) \times (19' \times \frac{2}{3} + 0.5')\right]$

$- \left[644 \times 7.5' \times 8' \times 23'\right] = 72.9^{K}$

$M_u = 1.4(18.3 + 72.9) = 128^{'K}$

$F = \frac{bd^2}{12000} = \frac{10 \times 32^2}{12000} = 0.86$

$K = \frac{M_u}{F} = \frac{128}{0.86} = 149$

$Q_u = 2.92$ (ACI-SP-17 FIG X 1-2)

$A_s = \frac{M_u}{a_u d} = \frac{128}{2.96 \times 32} = 1.40^{\square''}$ 2-#8 TOP & BOTT

Figure D-1. Continued.

SPANDREL DESIGN

WALL 1

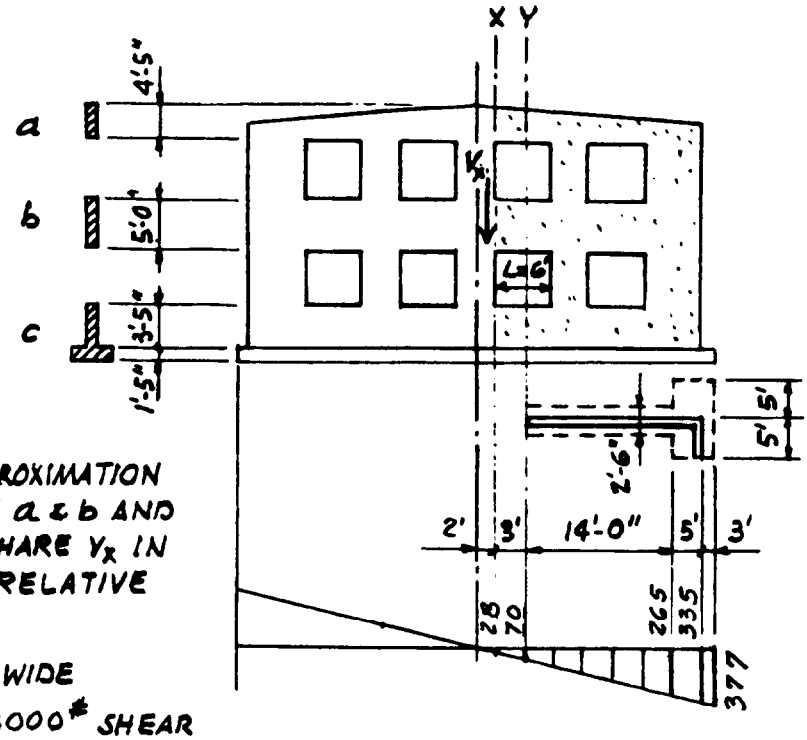

SOIL PRESSURE (SEISMIC)
(p.29)

AS A SIMPLYFYING APPROXIMATION ASSUME THAT SPANDRELS a & b AND FOUNDATION WALL C SHARE V_X IN PROPORTION TO THEIR RELATIVE RIGIDITIES

$V_X = \frac{265+28}{2} \times 17' \times 2.5$ WIDE $+ 335 \times 10' \times 8' = 33000^{\#}$ SHEAR DUE TO SEISMIC OVERTURNING

$V_y = \frac{265+70}{2} \times 14 \times 2.5 + 335 \times 8 \times 70 = 32700^{\#}$

	$I(FT^4)$	L	$R = I/L$	R/ΣR	V_x	$v = \frac{V}{\phi A_c}$	V_y	$M = \frac{VL}{2}$	W_{D+L}	$M' = \frac{wL^2}{12}$	M+M'
4.5'	6.3	6'	1.05	0.22	7.3^K	22 psi	7.2	$21.6^{'K}$	$954^{\#}/'$	$2.86^{'K}$	$24.5^{'K}$
5'	8.68	6'	1.45	0.31	10.2	28	10.1	30.3	$2593^{\#}/'$	$7.78^{'K}$	$38.1^{'K}$
5' / 2.5'	13.31	6'	2.22	0.47	15.5	43	15.4	46.2	$1178^{\#}/'$	$3.5^{'K}$	$49.7^{'K}$
			4.72	1.0	33.0^K		32.7^K				

DESIGN SPANDREL FOR MAX. MOMENT (M+M')

SAMPLE CALCULATION: $V_X = 33.0^K \times R/\Sigma R = 33.0^K \times .22 = 7.3^K$

$W_{D+L} = (391^{\#}/') + 4.5' \times 125^{\#} = 954^{\#}/'$ UNIT WT. ON SPANDREL
(p.18)

NOTE: ROOF LL NEGLECTED WHEN COMBINED WITH SEISMIC (SEAOC SEC. 1H1a.)

Figure D-1. Continued.

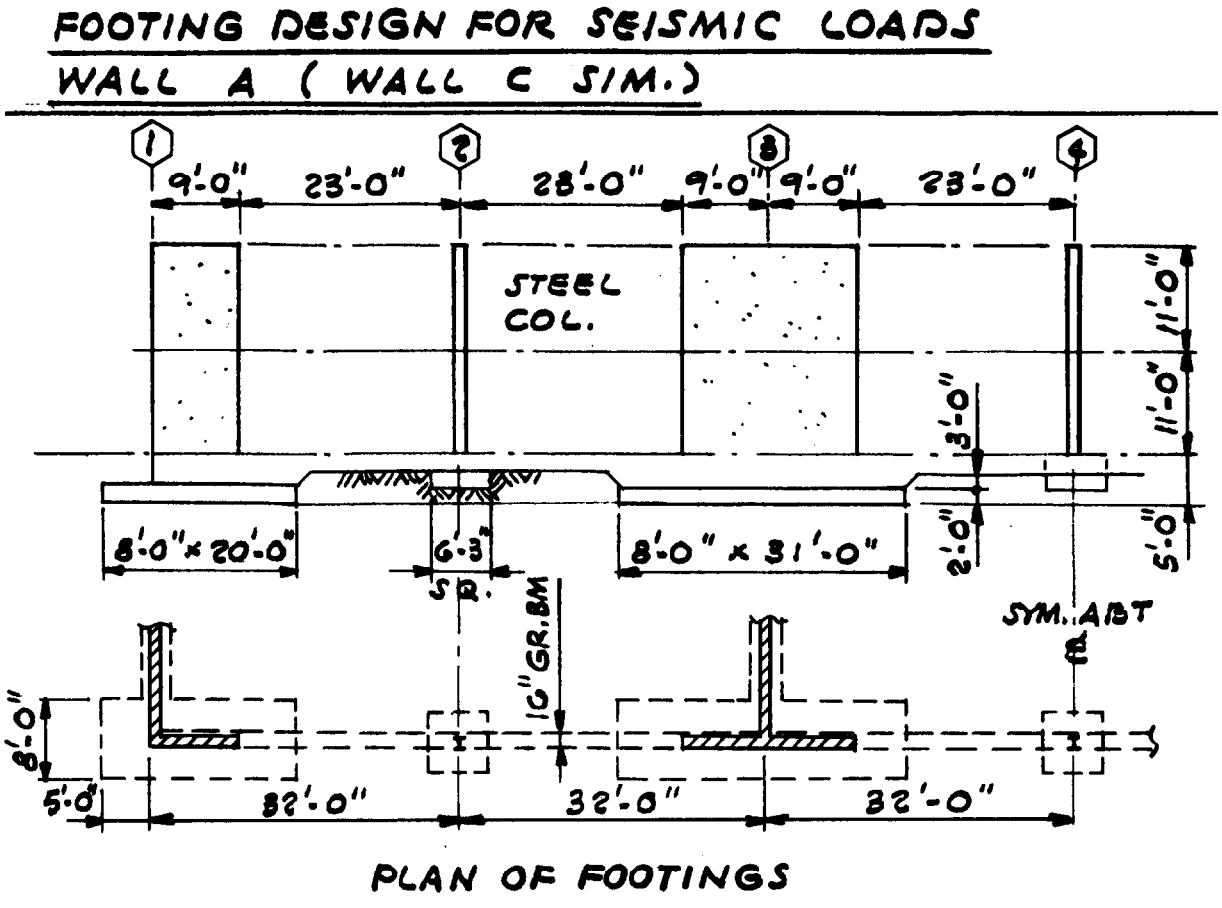

Figure D-1. Continued.

FOOTING DESIGN FOR SEISMIC LOADS

WALL A (WALL C SIM.)

18' PIER

TOTAL WALL OVERTURNING MOMENT = 2480 'K (P.16)

OVERTURNING MOMENT TO 18' PIER =

$$\frac{R}{\Sigma R} \times 2480'^{K} = \frac{13.3}{35.6} \times 2480 = 927'^{K}$$ (P.10)

SHEAR $V = 56.3^{K}$ (P.25)

OVERTURNING MOMENT @ BASE OF FTG.

$M_{OT} = 927'^{K} + 56.3^{K} \times 5' = 1209'^{K}$

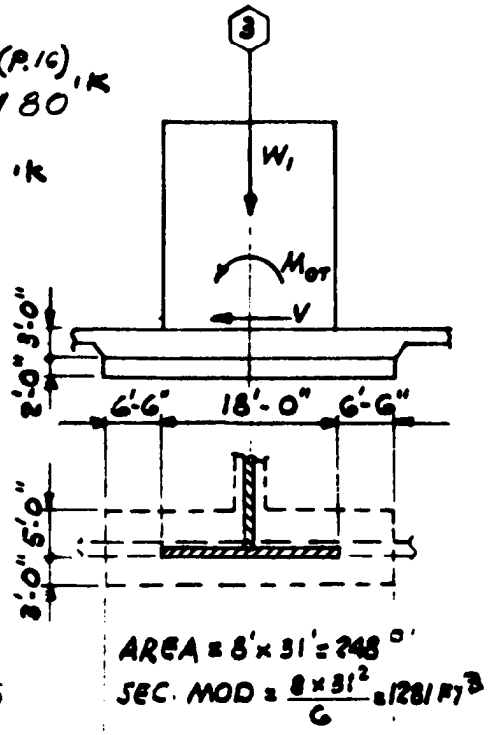

PLAN

WEIGHTS

W_1 = 58860 # (DEAD) (P.20)

W_1 = 4800 # (LIVE EXCL. ROOF L.L.) (P.20)

W_1 = 5761 #/' x 4.17' TRIB = 24023 # (DEAD) } CROSS WALLS (P.19)

W_1 = 1600 #/' x 4.17' TRIB = 6672 # (LIVE) }

ΣW_1 (DEAD) = 82883 #

ΣW_1 (LIVE) = 11472 #

W_{FTG} = 2' x 150 PCF = 300 PSF

W_{SOIL} = 3' x 115 PCF = 345 PSF

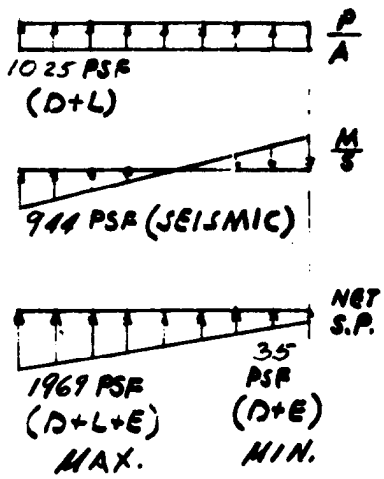

SOIL PRESSURE	MAX.	MIN.
P/A (FTG + SOIL)	+ 645 PSF	+ 645 PSF
P/A (DEAD) $\frac{82883}{248}$	+ 334	+ 334
P/A (LIVE) $\frac{11472}{248}$	+ 46	
M/S (SEISMIC) $\frac{1209{,}000}{1281}$	+ 944	− 944
	+ 1969 PSF	+ 35 PSF
		NO UPLIFT

Figure D-1. Continued.

WALL A (WALL C SIMI.)

9' PIER

(P.17)

TOTAL WALL OVERTURN MOMENT = 2480 $^{'K}$

OVERTURN MOM. TO 9' PIER

$$\frac{R}{\Sigma R} \times 2480 = \frac{4.5}{35.6} \times 2480 = 313\ ^{'K}$$

SHEAR V. = 19.0^K (P.25)

OVERTURN MOM. @ BASE OF FTG.

M_{OT} = 313$^{'K}$ + 19.0^K × 5' = 408 $^{'K}$

AREA OF FTG. = 8' × 20' = 160 $^{\square'}$

SECTION MODULUS = $\frac{8 \times 20^2}{6}$ = 533 FT^3

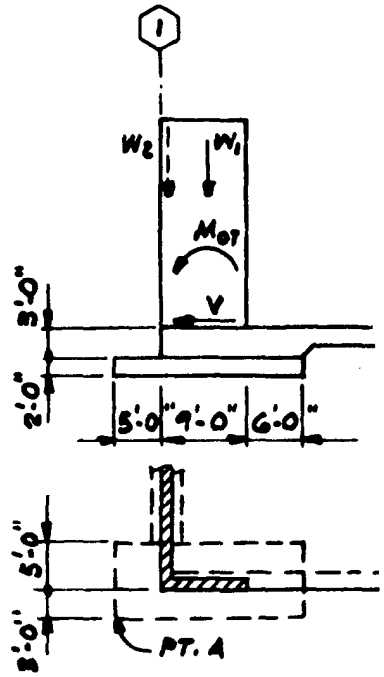

PLAN

WEIGHTS	×	DIST. TO PT. A	=	Wd
W_1 (DEAD)	=	29430# (P.20) × 9.5'	=	279585
W_1 (LIVE)	=	2400# (P.20) × 9.5'	=	22800
W_2 (DEAD)	=	3684 #/' × 4.17' TRIB. = 15362# × 5.42'	=	83264
W_2 (LIVE)	=	800 #/' × 4.17' TRIB. = 3336# × 5.42'	=	18081
$W_{FTG.}$		2' × 150# × 8' × 20' = 48000# × 10'	=	480000
W_{SOIL}		3' × 115# × 8' × 20' = 55200# × 10'	=	552000

ΣW (DEAD) = 147992# ΣWd (DEAD) = 1394849

ΣW (LIVE) = 5736# ΣWd (LIVE) = 40881

ECCENTRICITY e (DEAD) = $\frac{1394849}{147992}$ − 10' = −.57'

e (LIVE) = $\frac{40881}{}$ − 10' = 2.87'

Figure D-1. Continued.

FOOTING DESIGN FOR SEISMIC LOADS
WALL A (WALL C SIM)

9' PIER (CONT.)

SOIL PRESSURE		MAX	MIN.
P/A (FTG + SOIL)	300# + 345#	= +645 PSF	+645
P/A (DEAD)	$\frac{29430 + 17814}{160}$	= +293	+293
P/A (LIVE)	$\frac{2400 + 3336}{160}$	= +36	
Pe/S (DEAD)	$\frac{150144 \times 0.63'}{533}$	= +177	-177
Pe/S (LIVE)	$\frac{5736 \times 2.87'}{533}$	= +31	
M_{OT}/S (SEISMIC)	$\frac{408,000}{533}$	= +765	-765
		1947 PSF < 3000 × 1⅓ OK	-4 UPLIFT. SMALL UPLIFT CONSIDERED OK, SINCE GR. BM. CAN OFFER SOME RESISTANCE

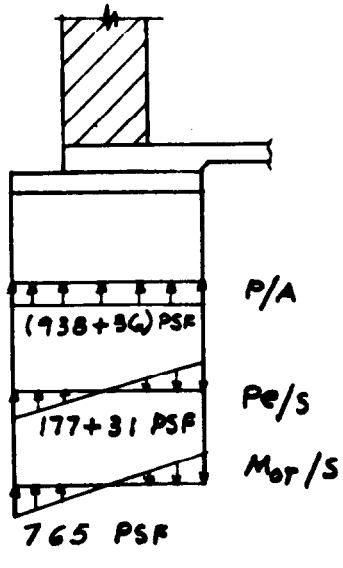

Figure D-1. Continued.

DESIGN OF ROOF DIAPHRAGM

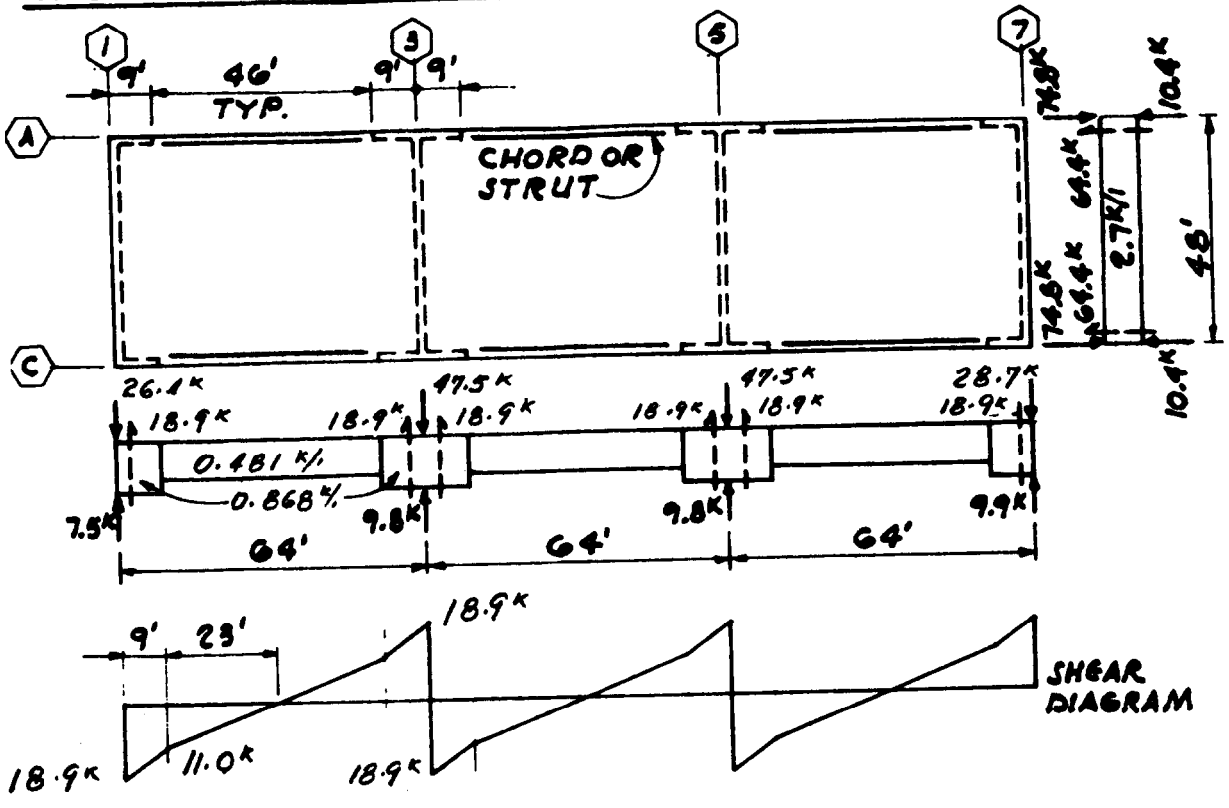

SEAOC FORMULA (1-11): $F_{px} = \left(\frac{F_t + \Sigma F_i}{\Sigma \omega_i}\right)\omega_{px}$

$= \left(\frac{0+150}{534}\right)\omega_{px} = 0.281\omega_{px}$

MIN. $F_{px} = 0.35ZI\omega_{px} = 0.14\omega_{px}$ WHERE $Z = 0.4$

MAX. F_{px} NEED NOT EXCEED $0.75ZI\omega_{px}$ $I = 1.0$

FROM DIAGRAM p.4, MULTIPLY ALL VALUES SHOWN @ 100% G BY $C_p = 0.281$

MAX. AVE. DIAPH. SHEAR: (N-S) $\frac{18{,}900^{\#}}{48'} = 394\,\#/'$

(E-W) $\frac{64400^{\#}}{192'} = 335\,\#/'$

USE 1½" STEEL DECK 20 GA. SPAN 6'-0" ALLOW SHR = 470#/'
5 END WELDS & BUTTON PUNCH @ 24" O.C. (FIG. 5-19)

Figure D-1. Continued.

DESIGN OF ROOF DIAPHRAGM - CONT.

MAXIMUM MOMENT $= \left(\frac{18.9+11.0}{2}\right)9' + \left(11.0 \times \frac{28}{2}\right) = 261^{'K}$

CHORD STRESS (N-S) $= \frac{M}{D} = \frac{261}{47.2'} = 5.5^{K}$

CHORD STRESS (E-W) $= \frac{VL}{4D} = \frac{64.4 \times 48}{4 \times 191.58} = 4^{K}$

DESIGN CHORD FOR TENSION OR COMPR OF 5.5^{K}

DESIGN FOR CHORD REBAR IN WALLS 1 & 7

$$A_s = \frac{1.4T}{\phi f_y} = \frac{1.4 \times 4^{K}}{0.9 \times 40} = 0.16^{\square''}$$

USE 2-#5

STRUT DESIGN (E-W): IN THE EAST-WEST DIRECTION, THE CHORD BEAMS ALONG (A) & (C) ACT AS COLLECTOR OR DRAG STRUTS. BECAUSE OF WALL RIGIDITIES, DIAPH. SHR. IS TAKEN THRU THE STRUT IN TENSION & COMPR. IN PROPORTION TO THE WALL RIGIDITIES.

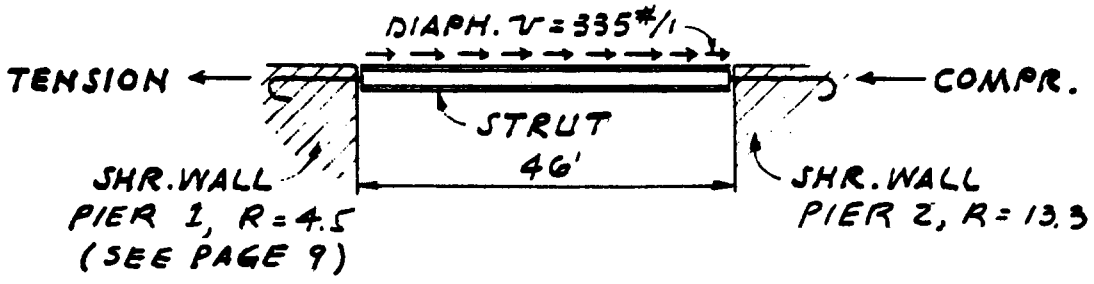

∴ DESIGN STRUT FOR:

$$C = T = 335\,\#/' \times 46' \text{ LENGTH} \times \frac{13.3}{17.8} = 11{,}514\,\#$$

Figure D-1. Continued.

DESIGN OF 2ND FLOOR DIAPHRAGM

THE CONCRETE DIAPHRAGM SHALL BE DESIGNED TO SATISFY SEAOC FORM. (1-11), BUT SHALL NOT BE LESS THAN THAT REQUIRED TO TRANSFER SHEAR ON P. 15.

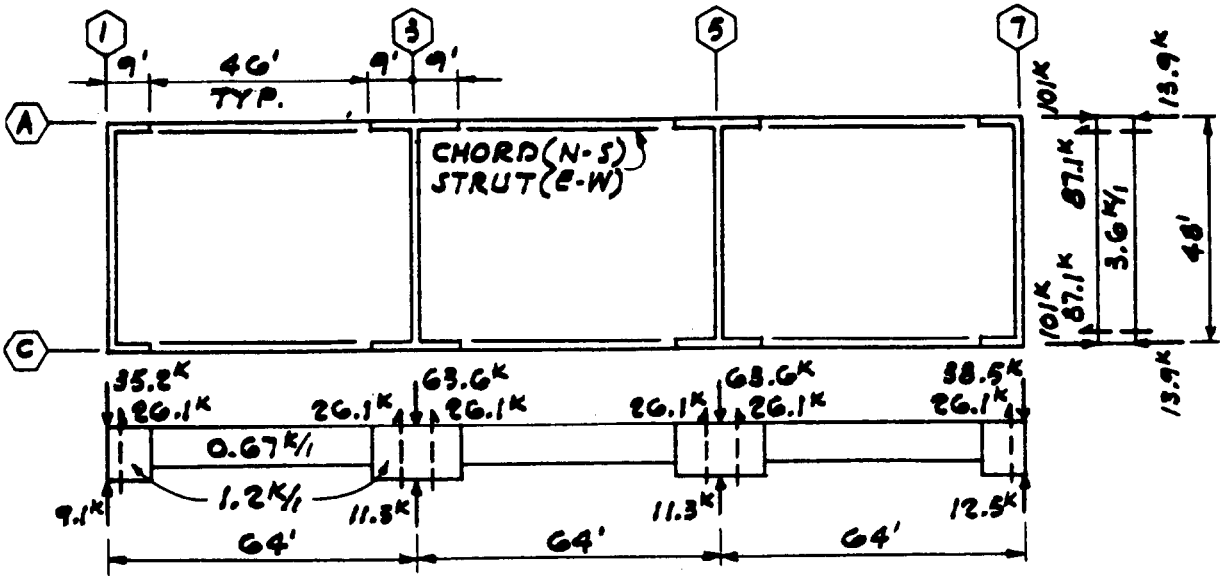

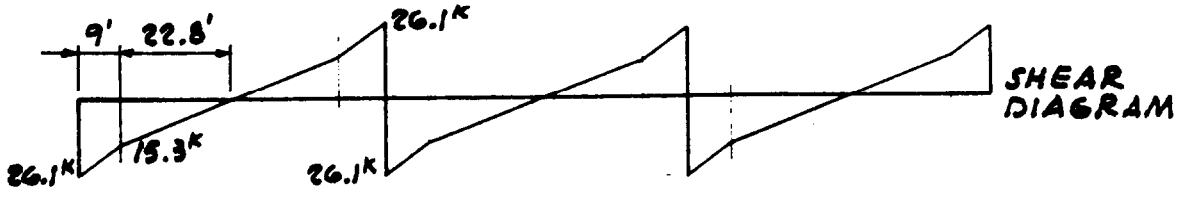

SEAOC (1-11) : $F_{px} = \left(\frac{F_t + \Sigma F_i}{\Sigma W_i}\right) W_{px}$

$= \left(\frac{0+300}{1614}\right) W_{px} = 0.186\, W_{px}$ (NORTH-SOUTH & EAST-WEST) (P. 6)

MIN. $F_{px} = 0.14\, W_{px}$

FROM DIAGRAM P. 5, MULTIPLY ALL VALUES SHOWN @ 100 G BY $C_p = 0.186$.

MAX. AVG. DIAPH. SHEAR : (N-S) $\frac{26100^{\#}}{48'} = 544^{\#}/'$

(E-W) $\frac{87100^{\#}}{192} = 454^{\#}/'$

USE 2½" CONC. ON 16-18 GA. STEEL DECK ALLOW. $q = 2760^{\#}/'$
(EQ. 5-27 & FIG 5-22, 3 of 3) $f_c' = 3{,}000$ PSI

Figure D-1. Continued.

DESIGN OF 2ND FLOOR DIAPHRAGM (CONT.)

$$\text{MAX. MOMENT} = \left(\frac{26.3^K + 15.5^K}{2}\right) 9' + \left(15.5^K \times \frac{23'}{2}\right) = 366'^K$$

$$\text{CHORD STRESS (N-S)} = \frac{M}{D} = \frac{366'^K}{47.2} = 7.8^K$$

DESIGN CHORD FOR TENSION OR COMPR. OF 7.8^K

$$\text{CHORD STRESS (E-W)} = \frac{VL}{4D} = \frac{84.5^K \times 48'}{4 \times 191.58} = 5.3^K$$

DESIGN FOR CHORD REBAR IN WALLS 1 & 7

$$A_s = \frac{1.4T}{\phi f_y} = \frac{1.4 \times 5.3}{0.9 \times 40} = 0.21 \ \square''$$

USE 2-#5

STRUT DESIGN (E-W):

DESIGN STRUT FOR TENSION & COMP. OF $T = C = 366^{\#}/' \times \frac{46'}{2} = 8420^{\#}$

CHECK STRESSES FOR SHEAR P.16

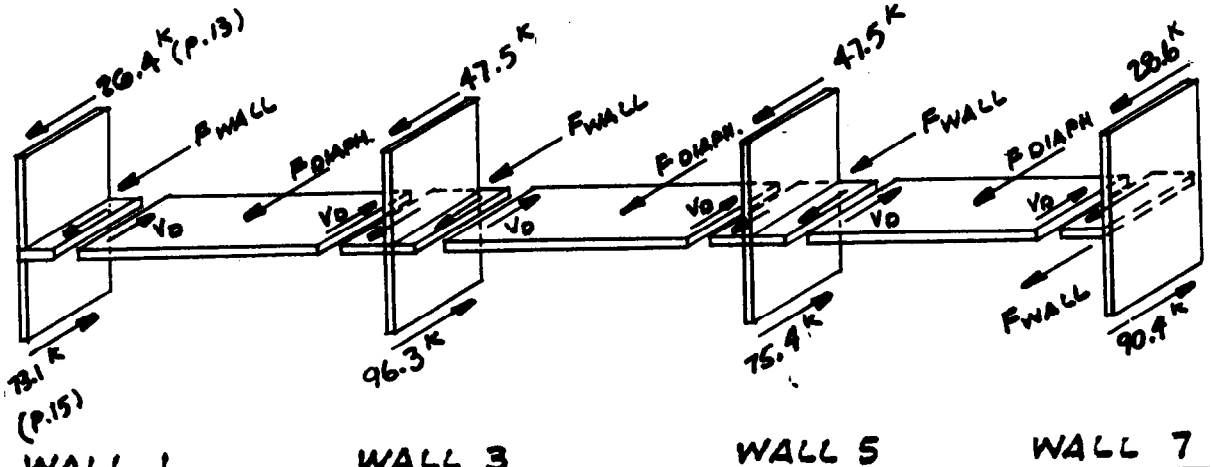

V_D = DIAPHRAGM SHEAR

F_{WALL} = SEISMIC FORCE FROM WT OF TRIBUTARY WALL

F_{DIAPH} = SEISMIC FORCE FROM WT OF DIAPHRAGM

Figure D–1. Continued.

DESIGN OF 2ND FLOOR DIAPH. (CONT)

NORTH-SOUTH

WALL 1

$F_{WALL} = 0.183 \times \text{TRIB. WALL WT.}$

$= \underset{\text{(p.6)}}{0.183} \times \underset{\text{(p.5)}}{48.6^k} = 9^k$

p.42 { SHEAR IN WALL ABOVE DIAPH. = 26.4^k
SHEAR IN WALL BELOW DIAPH. = 73.1^k

DIAPH. SHR $V_D = 73.1^k - 9^k - 26.4^k = 37.7^k$

SHEAR STRESS $v = \dfrac{37,700}{48'} = 785^{\#/'}$ OK

WALL 3

$F_{WALL} = 0.183 \times \overset{\text{(p.5)}}{60.6^k} = 11.1^k$

SHEAR IN WALL ABOVE DIAPH. = 47.5^k

SHEAR IN WALL BELOW DIAPH. = 96.3^k

$F_{DIAPH} = 0.183\left[\underset{\text{(p.5)}}{3.58^{k/'} \times 46'} + 6.34^{k/'} \times 18'\right] = 51.0^k$

DIAPH SHEAR V_D (WEST) $= 51.0^k - 37.7^k = 13.3^k$

DIAPH SHEAR V_D (EAST) $= 96.3^k - 13.3^k - 47.5^k - 11.1^k = 24.4^k$

SHEAR STRESS $= \dfrac{24,400^{\#}}{(48)} = 508^{\#/'}$ OK

WALL 7

$F_{WALL} = 0.183 \times \overset{\text{(p.5)}}{66.6^k} = 12.2^k$

SHEAR IN WALL ABOVE DIAPH. = 28.6^k

SHEAR IN WALL BELOW DIAPH. = 90.4^k

DIAPH SHR $V_D = 90.4^k - 28.6^k - 12.2^k = 49.6^k$

SHEAR STRESS $= \dfrac{49600^{\#}}{48'} = 1033^{\#/'}$ OK

Figure D–1. Continued.

DESIGN OF 2ND. FLOOR DIAPH. (CONT.)

NORTH-SOUTH

WALL 5

$F_{WALL} = 0.183 \times 60.6^k = 11.1^k$

SHEAR IN WALL ABOVE DIAPH. $= 47.5^k$ (p.15)

SHEAR IN WALL BELOW DIAPH. $= 75.4^k$ (p.16)

$F_{DIAPH} = 0.183\left[3.58^{k/'} \times 46' + 6.34^{k/'} \times 18'\right] = 51.0^k$

DIAPH SHR V_D(EAST) $= 51.0^k - 49.6^k = 1.4^k$

DIAPH SHR V_D(WEST) $= 75.4^k - 1.4^k - 11.1^k - 47.5^k - 51.0^k$

$= -35.6^k$

$$\text{SHEAR STRESS} = \frac{35{,}600}{(48' - 12')} = 989\ \#/' \quad \text{OK}$$

STAIR OP'G.

EAST-WEST

WALL A & C

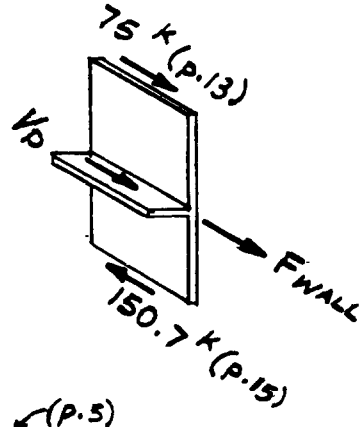

$F_{WALL} = 0.183 \times 74.4^k = 13.6^k$ (p.6) (p.5)

SHEAR IN WALL ABOVE DIAPH. $= 75^k$

SHEAR IN WALL BELOW DIAPH. $= 150.7^k$

DIAPH SHR $V_D = 150.7 - 75^k - 13.6^k = 62.1$

$$\text{SHEAR STRESS} = \frac{62{,}100}{192} = 323\ \#/' \quad \text{OK}$$

Figure D-1. Continued.

DIAPHRAGM DEFLECTION

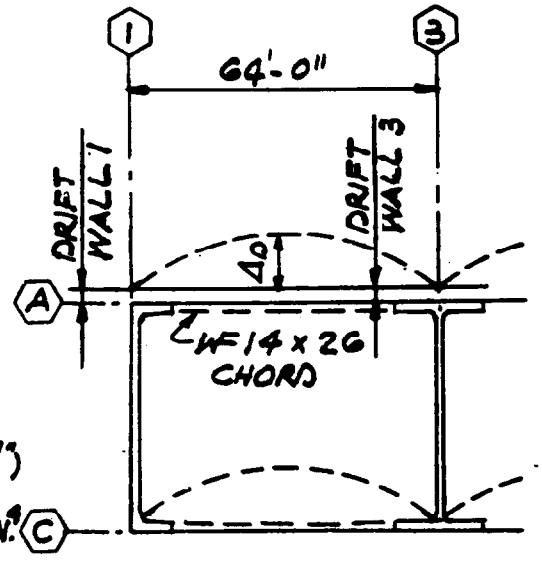

CHECK DEFLECTION OF ROOF DIAPH. BETWEEN GRID 1 & 3

$\Delta_D = \Delta_{\text{BENDING OF FLANGE}} + \Delta_{\text{SHEAR IN WEB}}$

ASSUME Δ_B IS DEFLECTION OF A SIMPLY SUPPORTED DIAPH.

$$\Delta_B = \frac{5}{384} \cdot \frac{wl^4}{EI}$$

WHERE I IS ASSUMED TO BE BASED ON WF14 x 26 CHORD (A = 7.67 □")

$$I = 2 \times 7.67^{\square''} \times \left(\frac{47.2'' \times 12''/'}{2}\right)^2 = 1,230,300 \text{ IN.}^4$$

(p. 39)

$$\Delta_B = \frac{5 \times 481^{\#}/' \times 64^4 \times 1728}{384 \times 29 \times 10^6 \times 1230300} = 0.005''$$

(p. 39)

AVG. SHEAR/F OF DIAPH $q_{AVG.} = \dfrac{18.9 + 0}{2 \times 48} = 0.197$ K/'

FLEXIBILITY $F = 16 + 26.8R$ (SEE FIG. 5-19)

WHERE $R = 6/18 = 0.33$

$F = 16 + 26.8(.33) = 24.8$

DIAPH DEFLECTION FROM SHEAR IN WEB:

$$\Delta_W = \frac{q_{AVG.} L_1 F}{10^6} = \frac{197 \times 32 \times 24.8}{10^6} = 0.156'' \text{ (Equ. 5-2)}$$

TOTAL DIAPH DEFLECTION $\Delta_D = \Delta_B + \Delta_W$

$= 0.005 + .156 = 0.161''$

DRIFT OF SHEAR WALL 1 $\Delta_1 = 0.037'' \times \dfrac{10''}{12''} \times \dfrac{26.4}{1000^K} \times \dfrac{3}{3.6} = 0.00070''$

(p. 9) (p. 13)

(ASSUMES FIXED BASE)

ADJUSTMENT TO FIG 6-4 FOR THICKNESS, FORCE & MODU. ELAS.

DRIFT OF SHEAR WALL 3 $\Delta_3 = \left(\dfrac{1}{38.1}\right) \times \dfrac{10''}{12} \times \dfrac{47.5}{1000} \times \dfrac{3}{3.6} = 0.00087''$

ALLOWABLE DRIFT $= 0.005H = 0.005 \times 12'_{AVG} \times 12 = 0.72'' > 0.00087$

$0.04/R_w = 0.04/6 = 0.0067$ (SEAOC 1E8a)

Figure D–1. Continued.

DIAPHRAGM DEFLECTION

THE AVERAGE DRIFT OF WALL (1) & (3) $= \dfrac{0.00070 + 0.00084}{2} = 0.0008''$

TOTAL RELATIVE DISPLACEMENT OF ROOF DIAPH W/RESPECT TO THE 2ND FLOOR $= 0.161'' + 0.0008$
$= 0.162''$

THE WALL ELEMENT MUST BE DESIGNED TO ACCOMODATE THIS RELATIVE DISPLACEMENT. IN THIS EXAMPLE PROBLEM, THE WALL ELEMENT IS A RELATIVELY FLEXIBLE CURTAIN WALL WHICH PRESENTS NO PROBLEM. THE DEFLECTION CACULATIONS HAVE BEEN INCLUDED PRIMARILY TO ILLUSTRATE THE PROCEDURE IN CASES WHERE BRITTLE WALLS (MASONRY OR CONC.) OCCUR.

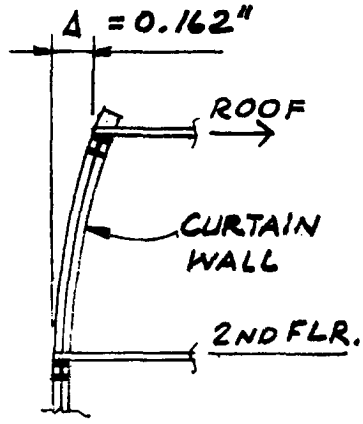

Figure D-1. Continued

DESIGN EXAMPLE D-2

Concrete Special Moment Resisting Frame

Description of Structure. A three-story Administration Building with a ductile moment resisting space frame in reinforced concrete without shear walls, using non-bearing, non-shear, exterior walls (skin) of flexible insulated metal panels. The structural concept is illustrated on Sheet 3.

Construction Outline.

Roof:
- Built-up 5-ply.
- Concrete joists and girders.
- Suspended ceiling.

2nd & 3rd Floors:
- Concrete joists and girders.
- Asphalt tile.
- Suspended ceiling.

1st Floor:
- Concrete slab-on-grade.

Exterior Walls:
- Non-bearing, non-shear, insulated metal panels.

Partitions:
- Non-structural removable drywall.

Design Concept.' Since the structure is a ductile moment resisting space frame with the capacity to resist the total required lateral force, the R_w-factor is 12. Seismic Zone 4.

Discussion. Inasmuch as the design requirements for concrete ductile moment-resisting frames are complex, a detailed design procedure is given on p. 2 of the example.

Loads.

Roof:

5-ply roofing	6.0
1" insulation	1.5
Conc. frame	115.0
Ceiling	5.0
Miscellaneous	3.5
Dead Load	131 psf
Add for seismic loading:	
Partitions	10
	141 psf
Live Load	20 psf

Floors:

Floor covering	1
Cone. frame	129
Partitions	20
Ceiling	5
Mech. & Elect.	5
Miscellaneous	4
Dead Load	164 psf
Live Load	50 psf
Exterior Wall	11 psf

Materials.

Concrete: $f'_c = 4$ ksi $E_e = 3.6 \times 10^6$ psi

Steel: $f_y = 60{,}000$ psi

Figure D-2. Concrete ductile moment resisting space frame.

DESIGN PROCEDURE

	Sheet No.
Building System and Loads	1-3
Member Sizes	4
Building Weights	5,6
Base Shear	6
Story Forces and Overturning	7
Relative Rigidities of Frames	7
Distribution of Forces to Frames	8
Frame Analysis	9,10
Design Forces for Beams -- PROCEDURE	11
Forces	12
Longitudinal Reinforcement Req'd, Actual M_u, M_p	13
Transverse Reinforcement	14
Column Forces	15
Slenderness, Magnified M (Req' d M_u)	16
Capacity Req'd, Actual M_u, Col. M_u > Beam M_u, M_p	17
Shear Based on M_p's	18
Special Transverse Reinforcement	19-21
Beam-Column Joint	22-24
Summary of Design	25

Figure D-2. Continued

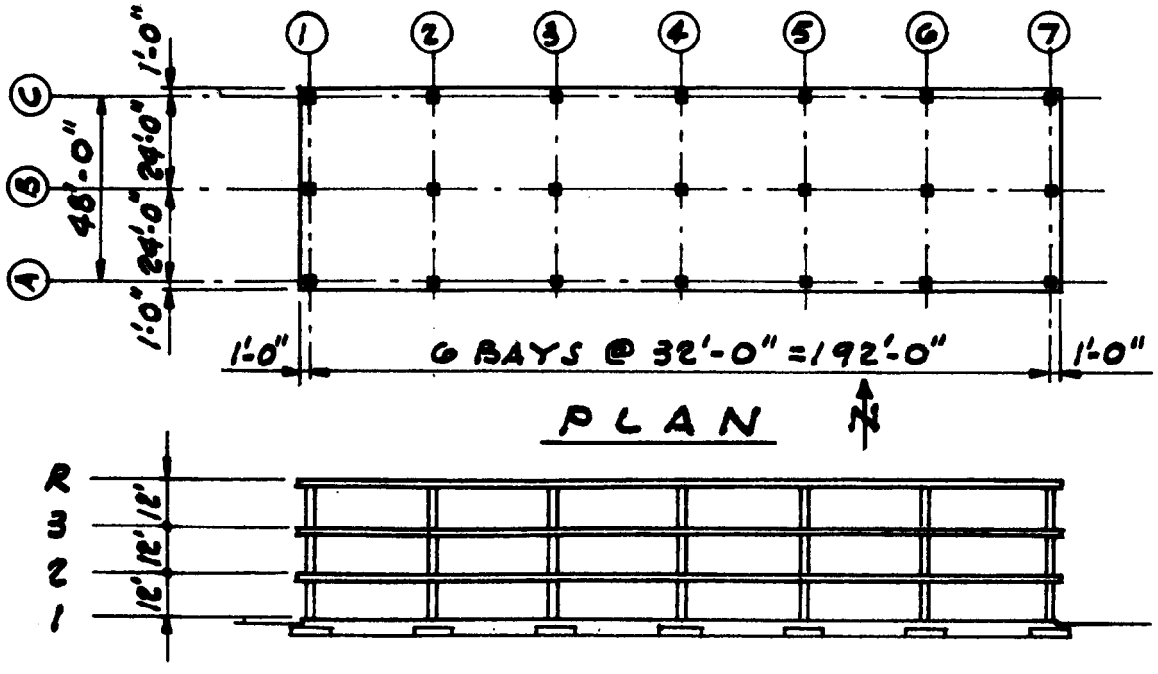

NORTH & SOUTH ELEVATIONS
(SECTION AT LINE B SIMILAR)

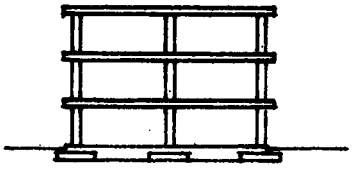

EAST & WEST ELEVATIONS
(TRANSVERSE SECTIONS SIMILAR)

SCOPE OF DESIGN EXAMPLE

1. CALCULATION OF LATERAL FORCES ON BLDG. AND DISTRIBUTION TO FRAME
2. TABULATION OF THE RESULTS OF ANALYSIS OF THE FRAME ON LINE B
3. DESIGN OF SECOND FLOOR BEAMS BETWEEN 1 AND 2
4. DESIGN OF COLUMNS B1 & B2

Figure D-2. Continued.

DISCUSSION OF MEMBER SIZES

1. The example is intended to illustrate the procedure for designing a concrete ductile moment resisting frame. The design work is complex, and several trials are required in order to achieve the optimum design.

2. The building configuration was arbitrarily made the same as that of the steel frame-of example D-3.

3. Frame B will be analyzed in this example and members between grid lines l & 2 will be designed to illustrate the design procedure.

   a. The section of beam & col. sizes is a trial and error Procedure. Architectural considerations, limitations on dimensions (Fig. 8-2), space for bar placement, allowable stresses of concrete and steel, etc., can affect the member sizes.

   b. The beam was assumed to be 28" x 30", and the required reinforcing and the actual ultimate moment capacity were calculated.

   c. For the min or max Pu and the required M_p(on the basis of column M_p beam M_p), a suitable column was estimated to be 24" x 24", with 12 - #10 or 10 - #11. (Note: Biaxial loading must be considered for column forces in the transverse direction:)

4. Results of a frame analysis are given, and the example continues with representative beam, column and joint design, using sizes and design forces from this analysis. The frame analysis itself is not shown since values can be obtained by computer or by any of the various approximate methods.

Figure D-2. Continued.

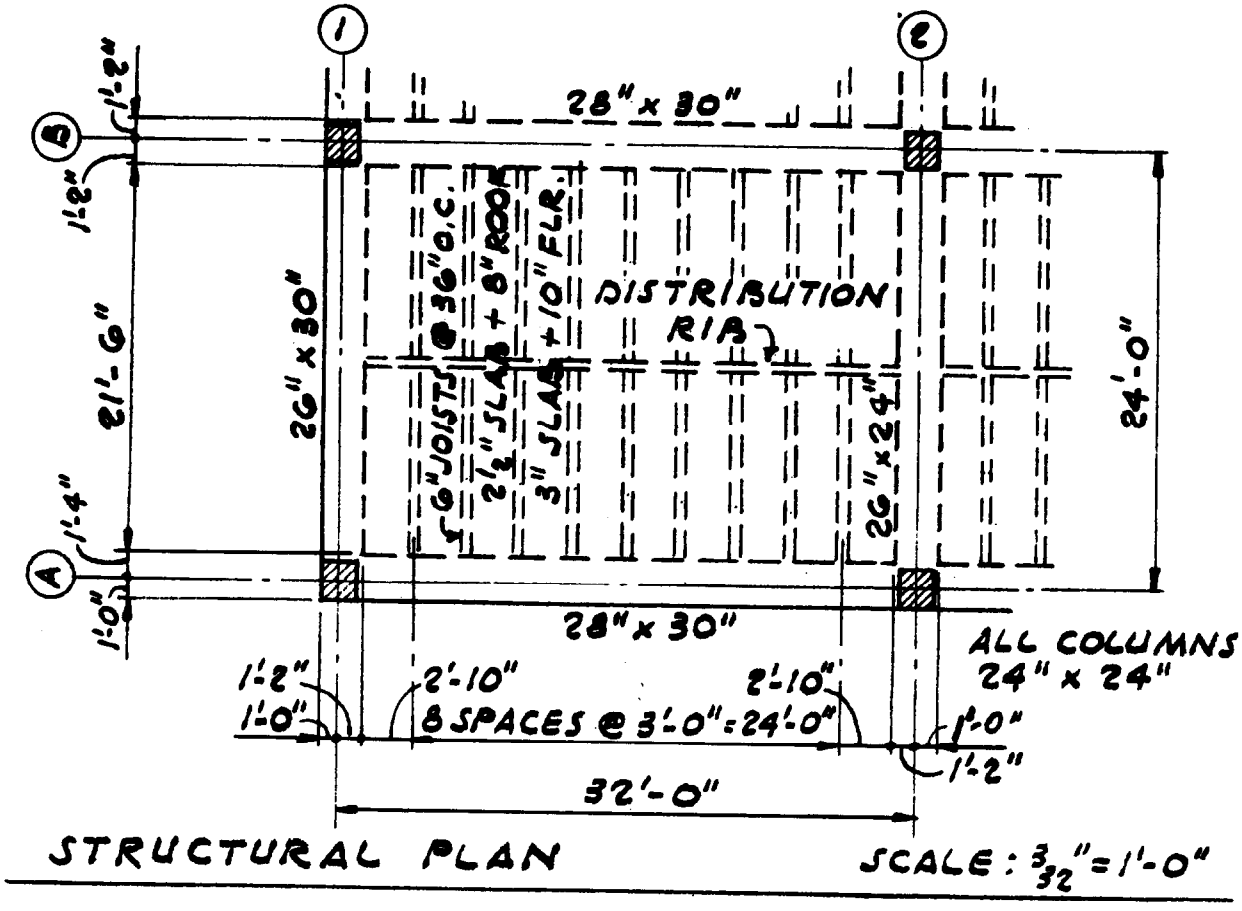

WEIGHT OF CONCRETE IN TYPICAL 32' x 50' BAY

ROOF:

LONGIT. GIRDERS	3 x 2.33' x 2.5' x 32' x 0.150	= 84.0
TRANSV. BEAM	2 x 2.17 x 2.0' x 21.5 x 0.150	= 28.0
JOISTS	2 x 29.67 x 21.5 x 0.050	= 63.8
COLUMNS 24x24	3 x (9.5/2) x (2.0)² x 0.150	= 8.6
		184.4 K

$$w_R = \frac{184{,}400^{\#}}{32.0' \times 50.0'} = 115 \text{ PSF}$$

FLOOR:

$$84.0 + 28.0 + \frac{61}{50}(63.8) + 2(8.6) = 207^{K} \text{ OR } 129 \text{ PSF}$$

Figure D-2. Continued.

BUILDING WEIGHTS

AT ROOF LEVEL

ROOF DL = (0.131 + 0.010) KSF × 50' × 194' = 1368 K

EXT. WALLS @ 10 PSF

N & S $2 \times 194' \times \left(\frac{12'}{2} + \overset{\text{PARAPET}}{1'}\right) \times 0.011 = 30^K$

E & W $2 \times 50' \times 7 \times 0.011 = 8$

$W_R = 1406^K$

AT FLOOR LEVEL

FLOOR DL = 0.164 × 50' × 194' = 1591 K

EXT. WALLS

N & S (12'/7') × 30 = 51

E & W (12'/7') × 8 = 14

$W_3 = W_2 = 1656^K$

TOTAL W = ΣW = 1406 + 1656 + 1656 = 4718 K

BASE SHEAR

$Z = 0.4 \qquad I = 1.0 \qquad R_W = 12$

$C_t = 0.030 \qquad h_n = 36.0'$

$T = C_t (h_n)^{3/4} = 0.030\,(36.0)^{3/4} = 0.441$

$C = \frac{1.25S}{T^{2/3}} = \frac{1.25 \times 1.5}{(0.441)^{2/3}} = 3.24$, USE 2.75

$V = \frac{ZIC}{R_W} W = \frac{0.4 \times 1.0 \times 2.75}{12} W = 0.0917W$

$= 0.0917 \times 4718 = 432^K$

Figure D-2. Continued.

STORY FORCES & OVERTURNING

LEVEL	h_x	Δh	w_x	$w_x h_x$	$\frac{wh}{\Sigma wh}$	F_x	V_x	$V_x h$	M
R	36'		1406	50,616	.46	200K			
		12'					200	2400	
3	24'		1656	39,744	.36	156K			2400
		12'					356	4272	
2	12'		1656	19,872	.18	76K			6672
		12'					432	5184	
			4718	110,232	1.00	432K			11,856K
			W			V			

RELATIVE RIGIDITIES OF FRAMES

THE FOLLOWING ASSUMPTIONS ARE MADE IN ORDER TO ESTIMATE THE FORCES TO BE APPLIED IN THE FRAME ANALYSIS.

LONGITUDINAL FRAMES

A, B & C 5 COLUMNS @ 1 = 5.0
2 COLUMNS @ $\frac{3}{4}$ = 1.5 } R = 6.5

$\Sigma R = 3 \times 6.5 = \underline{\underline{19.5}}$

TRANSVERSE FRAMES

LINES 1 & 7 1 COLUMN @ 1 + 2 @ $\frac{3}{4}$ = 2.5
ADJUST FOR SHORTER BEAMS = 32'/24' = 1.33;
SAY 1.16* × 2.5 = 2.9
ADJUST FOR NARROW BEAMS = (26"/28") = 0.928;
SAY 0.94* × 2.9 = $\underline{\underline{2.7}}$

LINES 2-6 1 COLUMN @ 1 + 2 @ $\frac{3}{4}$ = 2.5
ADJUST FOR SHORTER BEAMS 1.16 × 2.5 = 2.9
ADJUST FOR SHALLOWER BEAMS = $(24/30)^3$ = 0.51;
SAY 0.75* × 2.9 = $\underline{\underline{2.2}}$

$\Sigma R = (2 \times 2.7) + (5 \times 2.2) = \underline{\underline{16.4}}$

* NOTE: Effects of joint rotation are not proportional to beam stiffness.

Figure D-2. Continued.

DISTRIBUTION OF FORCES TO FRAMES

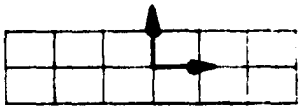

UNIT FORCE, $F = 1.00^K$

FRAME	REL R	$\frac{R}{\Sigma R}$	DIRECT FORCE	d	d^2	Rd^2	$\frac{Rd^2}{\Sigma Rd^2}$	TORSION FORCE	DIRECT + TORSION
1	2.7	.165	.165	+96	9216	24,883	.312	+.031	.196
2	2.2	.134	.134	+64	4096	9,011	.113	+.017	.151
3	2.2	.134	.134	+32	1024	2,253	.028	+.008	.142
4	2.2	.134	.134	0	0	0	0		.134
5	2.2	.134	.134	-32	1024	2,253	.028	-.008	.126
6	2.2	.134	.134	-64	4096	9,011	.113	-.017	.117
7	2.7	.165	.165	-96	9216	24,883	.312	-.031	.134
	16.4	1.000	1.000 TRANSV.					SEE NOTE	
A	6.5	.333	.333	+24	576	3,744	.047	+.005	.338
B	6.6	.334	.334	0	0	0	0	0	.334
C	6.5	.333	.333	-24	576	3,744	.047	-.005	.328
	19.5	1.000	1.000 LONGIT.		$\Sigma Rd^2 =$	79,782		SEE NOTE	

NOTE: SIGNS REVERSE FOR FORCE IN OPPOSITE DIRECTION. THEREFORE, DESIGN FOR ABSOLUTE VALUE OF TORSION FORCE.

TORSION:

BUILDING IS SYMMETRICAL, ∴ NO CALCULATED TORSION. ACCIDENTAL TORSION IS BASED ON ECCENTRICITY OF 5% OF MAX. DIM.

N-S EQ: $M_T = [0.05(192')] \times F = 9.6' \times 1.00^K = 9.6\ K'$

FORCE TO FRAMES 1 THROUGH 7

$$= \frac{(Rd^2/\Sigma Rd^2)\,M_T}{|d|} = \frac{9.6}{|d|} \cdot \frac{Rd^2}{\Sigma Rd^2}$$

E-W EQ: $M_T = [0.05(48')] \times F = 2.4' \times 1.00^K = 2.4\ K'$

FORCE TO FRAMES A, B, C

$$= \frac{(Rd^2/\Sigma Rd^2)\,M_T}{|d|} = \frac{2.4}{|d|} \cdot \frac{Rd^2}{\Sigma Rd^2}$$

Figure D-2. Continued

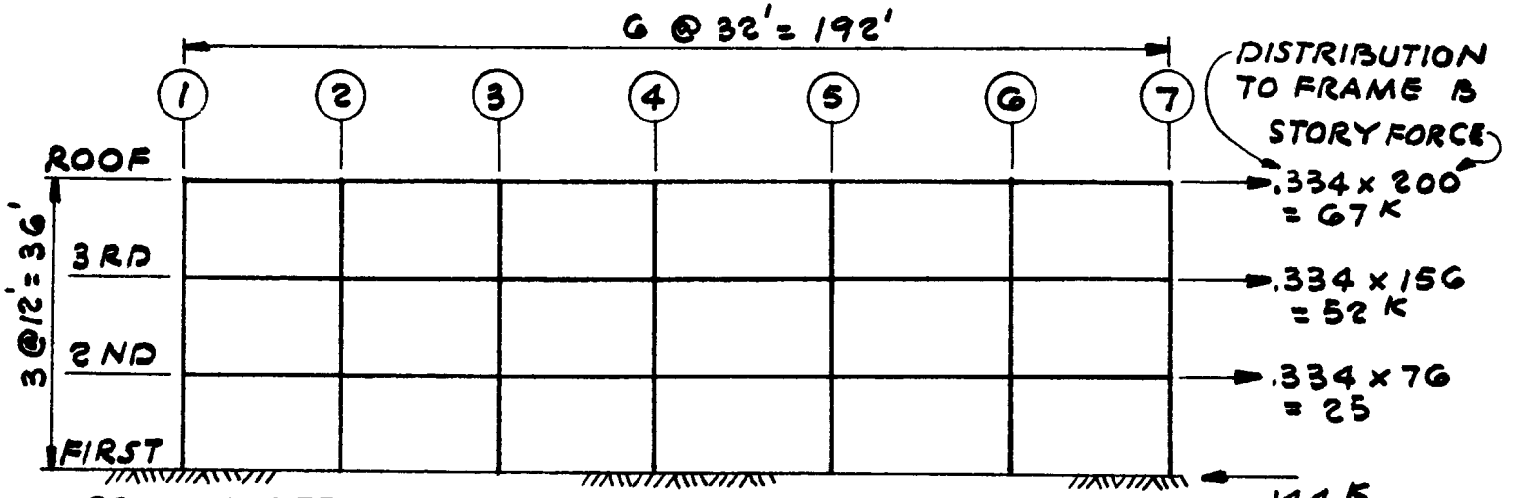

PROVIDE DEEP GRADE BEAM TO STIFFEN COLUMNS.
EXAMPLE ASSUMES COLUMNS FIXED AT BASE.

BEAM	b x D	I_g ft^4	W_{DL}	W_{LL}	REDUCED LL
ROOF	28"x30"	3.04	3.14 K/'	0.27 K/'	12 PSF
3RD & 2ND	28"x30"	3.04	3.94 K/'	0.72 K/'	30 PSF

ALL COLUMNS 24"x24"
I_c = 1.33 ft^4

f' = 4000 PSI
(STONE AGG.)

$E = 57{,}000 \times \sqrt{4000}$
= 3,605,000 PSI
= 519,000 KSF

REQUIRED OUTPUT

- BEAM & COLUMN END MOMENTS AT FACE OF SUPPORT
- COLUMN SHEAR & AXIAL LOAD
- FRAME PERIOD AND HORIZONTAL DEFLECTION UNDER LATERAL LOADS

BEAM DIMENSION LIMITATIONS (FIG. 8.2)

WIDTH = 28" > 10" MIN
DEPTH = 30 < 3.33 b MAX.
WIDTH = 28 < COL. WIDTH + 1.5d MAX

FRAME ANALYSIS = INPUT - FRAME (B)

Figure D–2. Continued.

FRAME ANALYSIS RESULTS (CALCS. NOT SHOWN) FRAME B

	DL	LL	SEISMIC F
ROOF	3.14	0.27 K/L	67 K
3RD	3.94	0.72	52
2ND	3.94	0.72	25

VALUES OF MOMENTS AND SHEARS ARE TAKEN AT FACE OF COLUMN OR BEAM.

ALL BEAMS 28"x30"
ALL COLUMNS 24"x24"

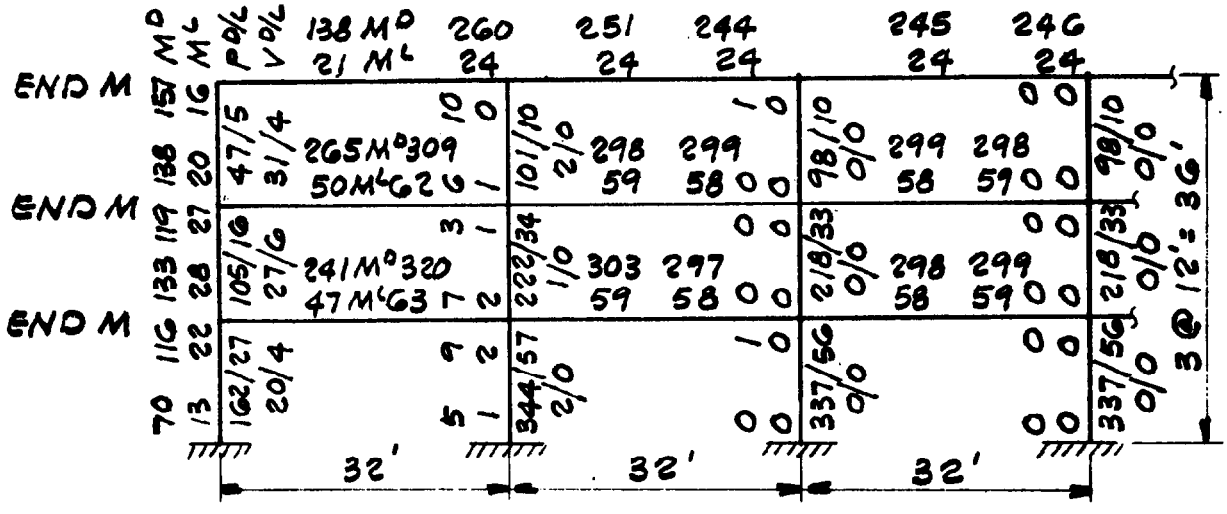

VERTICAL LOAD

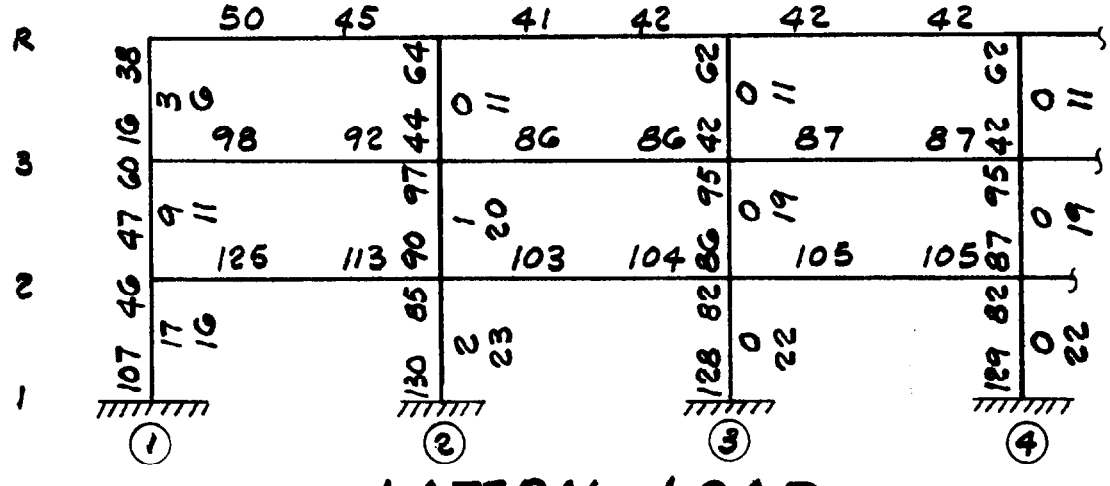

LATERAL LOAD

APPROX. 2ND STORY DRIFT

$$\Delta_{COL} = \frac{Ph^3}{12E_cI_c} = \frac{20(12)^3}{12(3600)1.33(12)} = .05''$$

$$\Delta_{TOTAL} = (.05'' + .055'') = .105''$$

$$\Delta_{GIR} = \frac{Plh^2}{12E_bI_b} = \frac{20(30)(12)^2}{12(3600)3.04(12)} = .055''$$

$$\Delta_{ALLOW.} = \frac{.04}{R_w}h = .48'' \text{ OK}$$

Figure D-2. Continued.

DESIGN FORCES FOR BEAMS - PROCEDURE

1. Obtain end *M's* and *V's* at face of support. These are given on p. 10 for Frame B.

2. Calculate and tabulate factored *M's* and *V's.*

   a. Vertical load only

      1. 4D + 1.7L

   b. Vertical plus maximum increase due to seismic

      1.4 (D+L+E) when *E* is in direction adding to *-M*

   c. Vertical minus reverse loading due to seismic

      0.9D + 1.4E when *E* is in direction giving *+M*

3. Calculate and tabulate max. pos. mom. away from the end. of the beam:

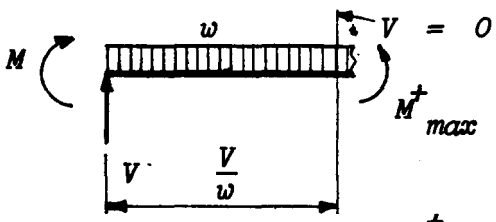

+M produces tension on the bottom

+V is upward at the left end of the beam

$$M^{+}_{max} = M + \frac{V^2}{2w} \quad (wL > V > 0)$$

4. Select maximum values for design. It is strongly recommended to sketch moment diagrams, especially when spans and loads are irregular.

5* Checkerboard loading may govern, maximum positive moments.

DESIGN FORCES FOR COLUMNS

1. Obtain *P, M, V* at face of support. These are given on p. 10 for Frame B

2. Calculate and tabulate factored *M's* and *P's*

   a. *1.4D*
   b. *1.4D+ 1.7L*
   c. *1.4(D+L+E)* for *E* in direction adding to vert. load
   d. *0.9D+l.4E* for *E* in direction opp. to vert. load

Figure D-2. Continued

BEAM FORCES

FRAME (B) FLOOR 2 FROM (1) TO (2)

28" x 30" d = 27'2 +M = TENS. ON BOTTOM	END 1		CLEAR SPAN = 30.0'			END 2	
	M	V	w	wL'	M+	M	V
(P.10) D	-241 k'	+56.5	3.94 k/'	119 k	164	-820	+62
L	-47	+10.6	0.72	22	31	-63	+12
E ⇄	±125	∓8	-	-	SMALL	∓113	±8
1.4D+1.7L	-417	+97				-555	+106
M+					+282		
1.4(D+L+E)	-228	+83				-694	+114
M+					+273		
1.4(D+L+E)	-578	+105				-378	+92
+M					+273		
0.9D+1.4E	-40	+40				-446	+67
0.9D+1.4E	-392	+62				-130	+44.5
MAX. NEG.	-578				—	-694	
MAX. POS.	— *				+282	— *	
1.4(D+L)		94					103
(D+L)		67					74

Figure D-2. Continued.

BEAM LONGITUDINAL REINFORCEMENT

$f_y = 60$
$f_c' = 4$
$m = \frac{f_y}{0.85 f_c'} = 17.65$

(1) FRAME B FLOOR 2 (2)

$w_D = 3.94$ K/'
$w_L = 0.72$ K/'

28" x 30" d = 27.5" F = 1.76

$\ell' = 30.0'$

$-M$	-578		-694	-651
$K = \frac{M}{F}$	328		394	
a_u	4.24		4.19	
REQ'D $A_s = \frac{M}{a_u d}$	4.96		6.02	
TOP BARS	5-#9		6-#9	
ACTUAL A_s	5.00		6.00	MIN. ρ = .0033
ρ	.00649		.00779	MAX. ρ = .025
$+M$		282		
K		175		
a_u		4.37		
REQ'D A_s		2.56		
½ TOP A_s	2.48		3.01	
BOTT. BARS	3-#9	4-#9	3-#9	
ACTUAL A_s	3.00	4.00	3.00	
ρ	.00390	.00519	.00390	

ULTIMATE MOMENT CAPACITY FURNISHED M_u

K	330		391	
$-M_u = KF$	581		688	
K	203	269	203	
$+M_u$	357	473	357	

ULT. MOM. CAP'Y: $\phi = 1.0$ & STEEL AT $1.25 f_y$** M_p

K	406 ÷ 0.9 = 451		481 ÷ 0.9 = 534	
$-M_p$	794		940	
K	250 ÷ 0.9 = 278		250 ÷ 0.9 = 278	
$+M_p$	489	641	489	

** SOLVE BY MODIFYING ρ BY 1.25 FACTOR.

Figure D–2. Continued.

BEAM TRANSVERSE REINFORCEMENT

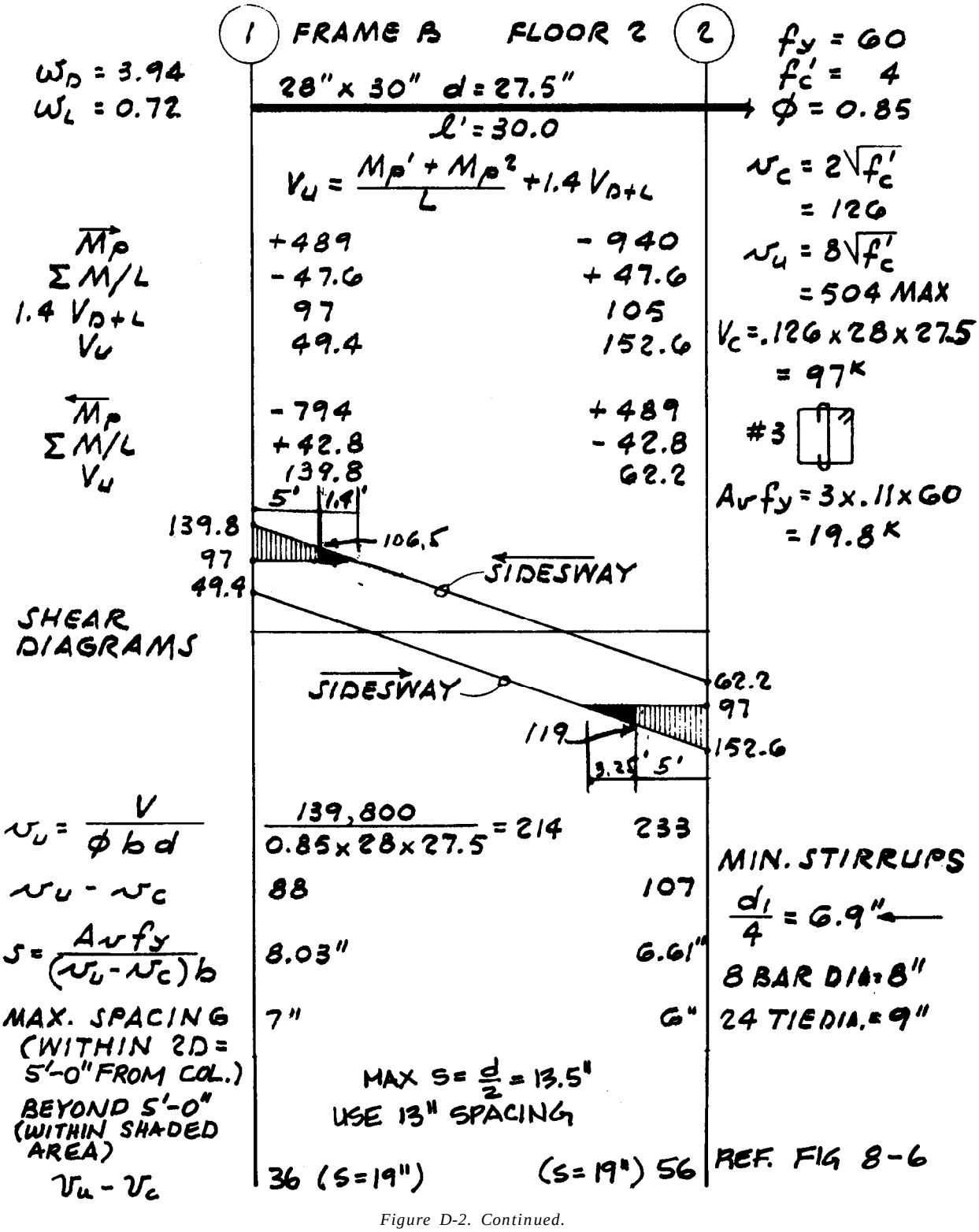

Figure D-2. Continued.

COLUMN FORCES FRAME (B)

1ST STORY	COLUMN B-1			COLUMN B-2		
	AXIAL	MOMENT		AXIAL	MOMENT	
		TOP	BOTTOM		TOP	BOTTOM
D	162	116	70	344	-9	-5
L	27	22	13	57	-2	-1
E →	-17	-46	-107	-2	-85	-130
E ←	+17	+46	+107	+2	+85	+130
1.4D+1.7L	272.7	199.8	120.1	578.8	-16.0	-8.7
1.4(D+L+E)	240.8	128.8	-33.6	558.6	-134.4	-190.4
1.4(D+L+E)	288.4	257.6	266.0	564.2	103.6	173.6
0.9D+1.4E	122.0	40.0	-86.8	506.8	-127.1	-186.5
0.9D+1.4E	169.6	168.8	212.8	312.4	110.9	177.5

COLUMN PROPERTIES (B-2)

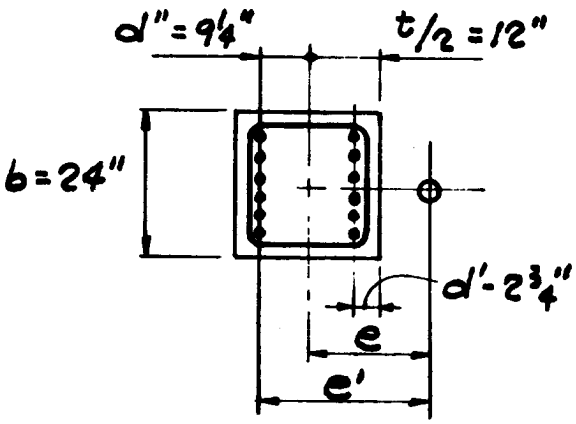

$f_c' = 4000$ PSI

$f_y = 60{,}000$ PSI

6 - #10 EACH FACE

$A_s = A_s' = 7.62$ IN^2

$d = 21\frac{1}{4}''$

$d'/d = 0.129$

$\phi = \frac{18\frac{1}{2}''}{24''} = 0.77$

DIMENSIONAL LIMITATIONS:

WIDTH = 24" > 12" OK

$\frac{\text{MIN. DIM.}}{\text{MAX. DIM.}} = \frac{24}{24} = 1 > 0.4$ OK

$h = b \geq 20 d_b$ OF BEAMS

$24'' > 20 \times 9/8 = 22.5''$ OK

$E_c = 519{,}000$ KSF
$I_c = 1.33$ FT^4 } P. 9

$E_c I_c = 690{,}000$ K·FT^2

$r = 0.3t = 0.60$ FT

$L_u = 9.5$ FT

Figure D-2. Continued.

COLUMN SLENDERNESS — FRAME (B)

1ST STORY	COLUMN B-1		COLUMN B-2	
	TOP	BOTTOM	TOP	BOTTOM
$K = I/L$	1.33/9.5 = 0.14			
ΣK (COLS)	0.28	0.14	0.28	0.14
BEAM I/L	3.04/30 = 0.10			
ΣK (BMS.)	0.10	∞	0.20	∞
$\psi = \frac{\Sigma K \text{ COL}}{\Sigma K \text{ BM}}$	2.8	1 FIXED END	1.4	1 FIXED END
k	1.54		1.37	
kL/r	1.54 x 9.5/0.6 = 24.4 > 22 ∴ "SLENDER" (CONT. BELOW)		1.37 x 9.5/0.6 = 21.7 < 22 ∴ "SHORT" (CONT. ON P.17)	

	MAX. AXIAL	MIN. AXIAL	REMARKS
P_u	288.4	122.0	Σ AXIAL, FRAME B
ΣP_u (ALL COLS)	3440 ←		(2x272.7) + (5x578.8)
$\beta_d = \frac{M_D}{M_T}$	$\frac{116}{258} = 0.450$	$\frac{116}{40} = 2.90$	
EI	190,000	70,800	$EI = \frac{\frac{E_c I_c}{2.5}}{1+\beta_d}$
$P_c = \frac{\pi^2 EI}{(KL_u)^2}$	8760	3260	
ΣP_c (ALL COLS)	72,900		$(2 \times 8760) + \left(5 \times \left(\frac{1.54}{1.37}\right)^2 \times 8760\right)$
$\delta = \frac{C_m}{1 - \frac{P_u}{\phi P_c}}$	1.049	1.056	$C_m = 1.0$ FOR UNBRACED COLUMNS
$\delta = \frac{C_m}{1 - \frac{\Sigma P_u}{\phi \Sigma P_c}}$	1.072		$\phi = 0.7$
			MAX. COL. M_u = 266 K' (P.15)
δM	1.072x266.0 = 285 K'	≈1.07 x 86.8 = 93 K'	REQ'D DES. M_u (NOTE: OTHER P.15 COMBIN. OF P & M WERE ALSO INVESTIGATED)

Figure D-2 Continued.

COLUMN CAPACITY — FRAME (B)

1ST STORY	COLUMN B-1	COLUMN B-2
SIZE	24" x 24"	24" x 24"
BARS	8 - #9 $A_{st} = 8.00$	12 - #10 $A_{st} = 15.24$
$\frac{P_u}{A_g} = \frac{\phi P_n}{A_g}$	$\frac{288.4}{24 \times 24} = 0.500$ KSI	$\frac{558.6}{24 \times 24} = 0.970$

COL. MOM. CAPACITY MUST BE GREATER THAN BEAM CAPACITY SINCE $P/A_g > 0.12 f_c' = 0.40$ KSI (SEE CHECK BELOW)

$\rho_g = \frac{A_{st}}{A_g}$	$\frac{8.00}{24 \times 24} = 0.0139$	$\frac{15.24}{24 \times 24} = 0.0264$

USING ACI SP17A-(85) CHART "COL. E4 - 60.75" FIND

ϕM_n	485 K' (> δM_u = 285)	785 K' (> M_u = 190.4)

COL. MOM CAPACITY, M_p @ $\phi = 1$, STEEL @ $1.25 f_y$ (which may be approximated by using $1.25 A_s$)

M_p	$\rho = 1.25 \times 0.0139 = 0.0174$ $\frac{\phi M_n}{A_g h} = 0.48$ $= \frac{0.48 \times 24^3}{0.7 \times 12} = 790$ K'	$\rho = 1.25 \times 0.0264 = 0.0330$ $\frac{\phi M_n}{A_g h} = 0.79$ $= \frac{0.79 (24)^3}{0.7 \times 12} = 1300$ K'

CHECK COL. CAP'Y > BEAM CAP'Y

Σ COL. M $> \frac{6}{5} \Sigma$ BM. M

581/2 = 291 K'	(357 + 688)/2 = 522
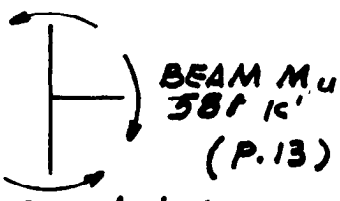	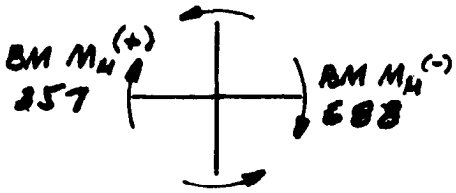
291 K' = ½ (BEAM M_u)	522 = ½ (Σ BM M_u)
COL. M_u = 485 K' $> \frac{6}{5} \times 291 = 349$ OK	COL. M_u = 782 K' $> \frac{6}{5} \times 522 = 626$ OK

Figure D-2 Continued.

COLUMN SHEAR — FRAME B

1ST STORY	COLUMN B-1	COLUMN B-2
	BM YIELDS BEFORE COL BM M_p = 794	
	397 — $M_T = \frac{1}{2}$ BM M_p 9.5' 790 — M_B = COL. M_p	715 — $M_T = \frac{1}{2}(\Sigma BM M_p)$ 9.5' 1300 — M_B = COL. M_p
V	$\frac{397 + 790}{9.5'} = 125$ K	$\frac{715 + 1300}{9.5'} = 212$ K
$v_u = \frac{V}{\phi A_c}$	$\frac{125}{.850 \times 420} = 0.35$ KSI ← P. 19	$\frac{212}{.85 \times 420} = 0.59$
$v_u - v_c$	.350 − .126 = .224 KSI	.59 − .126 = .454 KSI
TIE $S = \frac{A_v f_y}{(v_u - v_c) d_c}$	$\frac{3 \times 0.20\square'' \times 60^K}{.224 \text{ KSI} \times 20.5''} = 7.81''$ USE 8"	$\frac{4 \times 0.20\square'' \times 60^K}{.454 \text{ KSI} \times 20.5''} = 5.16$ USE 5"

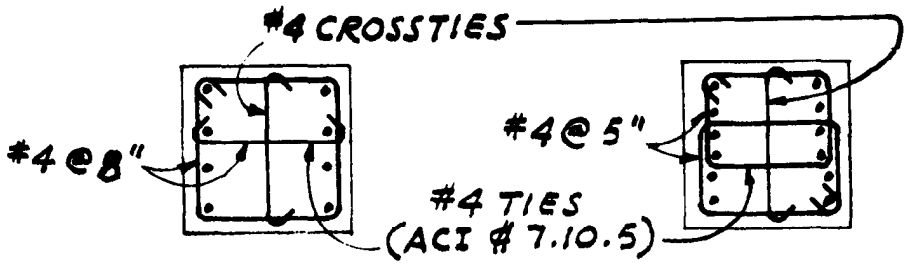

USE #4 COLUMN TIES, $A = 0.20\square''$

MAX. SPACING, $S_{MAX} = \frac{\text{COL. DIM.}}{2} = 12''$

Figure D–2. Continued.

COLUMNS: SPECIAL TRANSVERSE REINFORCEMENT

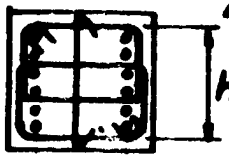

FOR CONFINEMENT

$h_c = 24 - 2(1\tfrac{3}{4}) = 20.5''$

TIE SETS @ SPACING s,
$s \leq 4''$

A_{sh} = TOTAL AREA OF HOOPS

$A_g = 24 \times 24 = 576\ IN^2$

$A_c = 20.5 \times 20.5 = 420\ IN^2$

$f_c' = 4{,}000 \quad f_{yh}'' = 60{,}000$

REF. ACI 21.4.4.1

(1) $$= \frac{A_{sh}}{0.30 h_c'' \frac{f_c'}{f_{yh}} \left(\frac{A_g}{A_{ch}} - 1\right)} = \frac{A_{sh}}{0.30 \times 20.5 \times \frac{4}{60}\left(\frac{576}{420} - 1\right)} = 6.57 A_{sh}$$

LARGER GOVERNS

(2) $$= \frac{A_{sh}}{0.09\, h_c \frac{f_c'}{f_{yh}''}} = \frac{A_{sh}}{0.09 \times 20.5 \times \frac{4}{60}} = 8.13\ A_{sh}$$

BAR SIZE	A_s	A_{sh}	$8.13 A_{sh}$	
#3	0.11	0.44	3.58	
#4	0.20	0.80	6.50	← USE #4 GR 60 @ 6½"
#5	0.31	1.24	10.08	

EXTENT OF SPECIAL TRANSV. REINF. IS THE MAXIMUM OF:

- MAX. COL. DIMENSION = 24" ←
- 1/6 CLEAR HEIGHT = 114/6 = 19"
- 18"

EXTEND MIN. 2'-0" ABOVE & BELOW

CONTINUED →

Figure D–2. Continued.

COLUMNS: SPECIAL TRANSVERSE REINFORCEMENT - CONT'D

SPECIAL TRANSV. REINF. IS ALSO REQUIRED WHERE COLUMN CAPACITY IS LESS THAN THE SUM OF THE SHEARS ABOVE. REF. APP. C PARAGRAPH C12

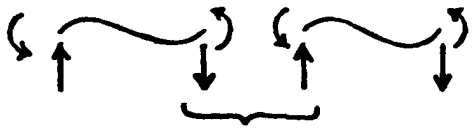

- ΣV IS THE COLUMN LOAD AT THIS LEVEL.
- AT INTERIOR COL'S THIS SUM IS RELATIVELY SMALL.
- END COLUMNS ARE USUALLY CRITICAL.

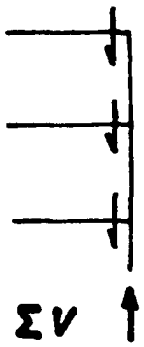

1. INCLUDE ALL BEAMS ABOVE THE COLUMN IN QUESTION.

2. $V_{u_\Sigma} = \left.\dfrac{(M_p^A + M_p^B)}{L}\right|_{p.13} + \left. V_{D+L}\right|_{p.12}$

3. AT THE COLUMN IN QUESTION, CALCULATE THE MAX. MOMENT TRANSFERRED TO THE COLUMN BY THE YIELDING BEAM.

4. DOES THE COLUMN HAVE THE CAPACITY TO CARRY ΣV_u WITH THIS BEAM MOMENT?
   - YES: NO ADD'L REINF. REQ'D.
   - NO: PROVIDE THE SPECIAL TRANSV. REINF. CALCULATED ON P. 19 FOR FULL HEIGHT.

SEE P. 21 FOR SAMPLE CALC.

Figure D-2. Continued.

COLUMNS: SPECIAL TRANSVERSE REINFORCEMENT CONT.

FRAME COLUMN	B 1	
ROOF BEAM $\Sigma M_p/L$ V_{D+L} V_u^R	 35 55 90	CALCS. NOT SHOWN
3RD FLR. BEAM $\Sigma M_p/L$ V_{D+L} V_u^3	 43 67 110	ASSUME SAME AS 2ND
2ND FLR. BEAM $\Sigma M_p/L$ V_{D+L} V_u^2	 43 67 110	$= \frac{794 + 489}{30}$ (p. 13) (p. 12)
ΣV_u ABOVE	310	
M_p FROM BM	397	$= \frac{1}{2}$ BM $M_p = \frac{794}{2}$
ALLOW COL. M WITH $P = \Sigma V_u$	659	(ACI. SP 17A VOL. 2 CHART E4-60-75)
COL. M > M_p	YES	
SPEC. TRANSV. REINF.	NO	

Figure D-2. Continued.

BEAM-COLUMN JOINT

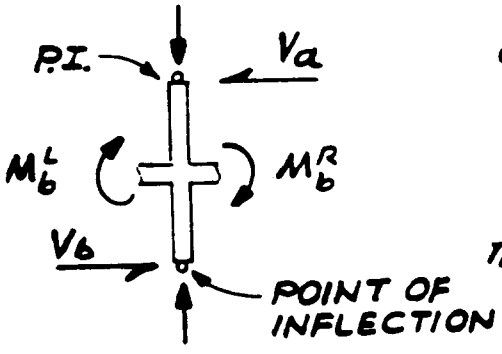

FORCES ON COLUMN

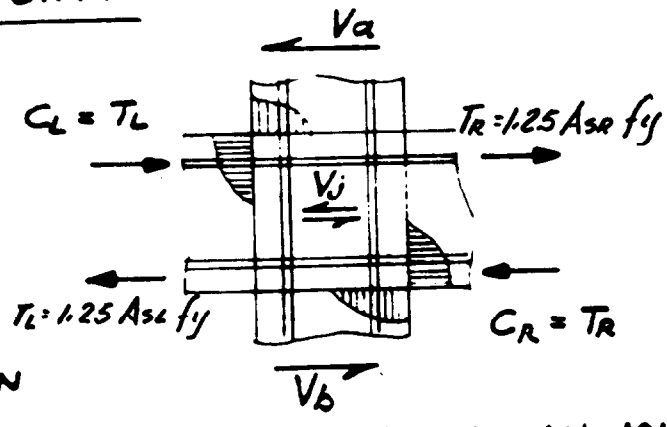

FORCES ON BEAM COLUMN JOINT

THE JOINT SHEAR, $V_j = 1.25 A_{SR} f_y + C_L - V_a$

$= 1.25 (A_{SR} + A_{SL}) f_y - V_a$

$v_j = V_j / \phi A_j$

A_j = BEAM WIDTH × COLUMN DEPTH = 28" × 24"

INTERIOR JOINTS: REF. ACI 21.6.2,3

JOINTS ARE CONFINED

$\therefore v_j \leq (20\sqrt{f_c'} = 1265 \text{ psi})$

TRANSV. HOOP REINF. MAY BE $\frac{1}{2}$ OF COLUMN HOOP REINF.

EXTERIOR JOINTS:

JOINTS ARE NOT CONFINED

$\therefore v_j \leq (15\sqrt{f_c'} = 949 \text{ psi})$

TRANSV. HOOPS SAME AS COL. HOOPS

Figure D–2. Continued.

BEAM-COLUMN JOINT-CONT. FRAME B

2ND STORY	COLUMN B-1	COLUMN B-2
HOOPS IN JOINT ← E	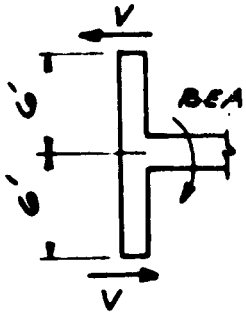 BEAM M_p = 794 P.13 $V = \frac{794^{k'}}{12'}$ $= 66.2^k$	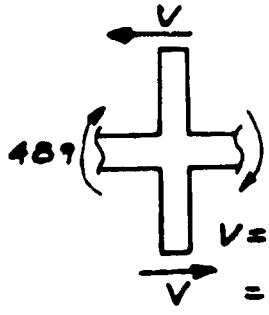 $V = \frac{940+489}{12}$ $= 119^k$
BEAM A_{SR}	$5.0\ IN^2$ (5.#9)	6.0 (6-#9)
BEAM A_{SL}	0	3.0 (3-#9)
$(A_{SR}+A_{SL})1.25F_y$	$(5.0+0)(75) = 375^k$	$(6.0+3.0)(75) = 675^k$
V_u (see Fig 8.9)	$375-66 = 309^k$	$675-119 = 556^k$
$v_u = \frac{V_u}{\phi bd}$	$\frac{309,000}{0.85 \times 28 \times 24} = 541 psi$	$\frac{556,000}{0.85 \times 28 \times 24} = 973 psi$
→ E	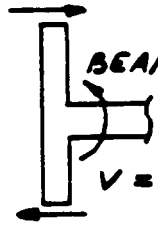	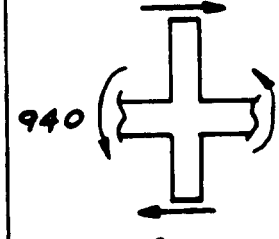
BEAM A_{SR}	$3.0\ IN^2$	$3.0\ IN^2$
BEAM A_{SL}	0	$6.0\ IN^2$
V_u (See Fig. 8.9)	$225-41 = 184^k$	$675-119 = 556^k$
v_u	332 psi	973 psi

Figure D-2. Continued.

BEAM-COLUMN JOINT-CONT. FRAME (B)

2ND STORY	COLUMN B-1	COLUMN B-2
N_j	541 < 949 p.s.i. O.K.	973 < 1265 p.s.i. O.K.
#4 HOOPS	SAME AS COL. (p. 19)	½ THAT OF COL. (p. 19)
HOOP SPACING	4"	8"

ANCHORAGE OF LONGIT. BARS

ACI. 21.6.4

EXTERIOR JOINT OF COLUMN B-1.

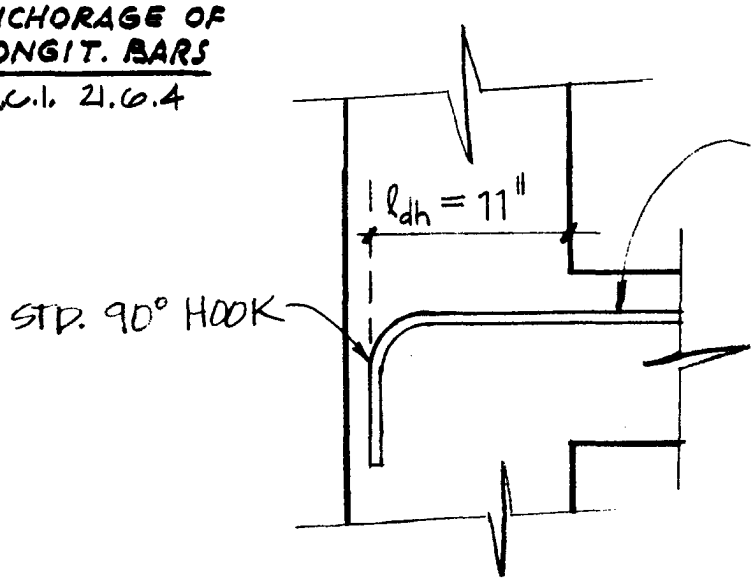

#9 BARS

$d_b = 1.128"$

$$l_{dh} = \frac{f_y\, d_b}{65\sqrt{f_c'}}$$

$$= \frac{60{,}000 * 1.128"}{65 * \sqrt{4000}}$$

$$= 16.5"$$

NOTE: FOR INTERIOR JOINTS, COL. DEPTH > $20d_b = 22.4"$ O.K.

Figure D–2. Continued.

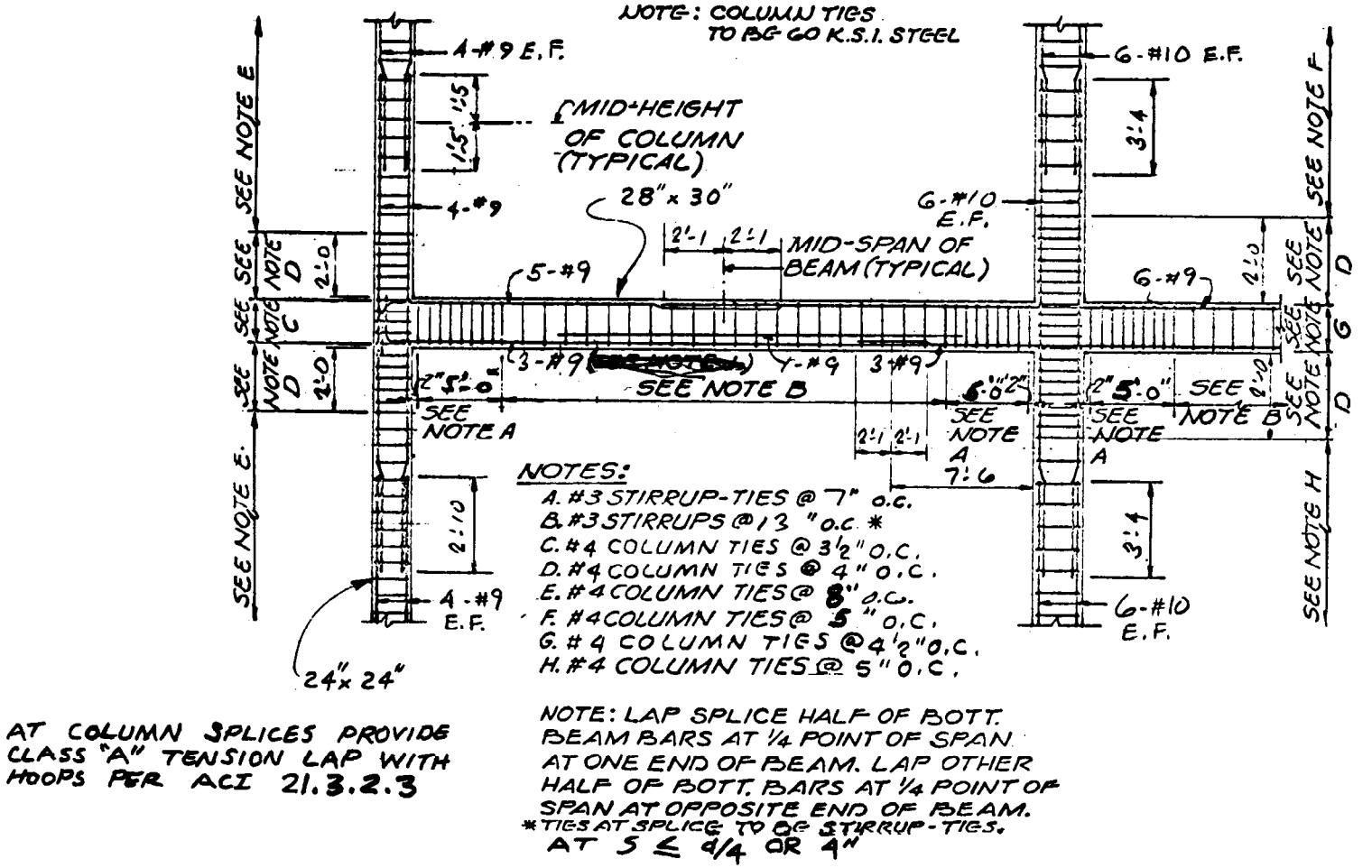

Figure D-2. Continued.

DESIGN EXAMPLE D-3

Steel Special Moment Resisting Frame and Steel Braced Frame

Description of Structure. A three-story Administration Building with transverse special moment-resisting frames and longitudinal concentric or eccentric braced frames in structural steel, using non-bearing, non-shear, exterior walls (skin) of flexible insulated metal panels. There are a series of interior vertical. load-carrying column and girder bents in addition to the space frame. The structural concept is illustrated on Sheets 2 and *3.*

Construction Outline.

Roof:
- Built-up 5 ply.
  - Metal decking with insulation board.
  - Suspended ceiling.

2nd & 3rd Floors:
- Metal decking with concrete fill.
- Asphalt tile.
- Suspended ceiling.

1st Floor:
- Concrete slab-on-grade.

Exterior Walls:
- Non-bearing, non shear, insulated metal panels.

Partitions:
- Non-structural removable drywall.

Design Concept. The transverse ductile moment-resisting frames are independent of the longitudinal braced frames. The moment frames are designed to $R_w = 12$; the concentric braced frames to $R_w = 8$; the eccentric braced frames to $R_w = 10$. The metal deck roof system forms a flexible diaphragm; therefore the roof loads are distributed to the frames by tributary area rather than by frame stiffnesses. The metal deck with concrete fill system for the floors form rigid diaphragms and the seismic loads are proportioned to the frames by the frame stiffnesses.

Discussion. Because of the importance of drift of flexible frames, the example shows several stages of design. Preliminary design to find sizes by approximate methods, using different *sets* of forces for stress and drift. The resulting trial sizes are then used in a computer analysis. (The frames are simple enough to be calculated by hand, but the computer makes short work of calculating design forces, frame period and drift). Final design is discussed, and examples are given for modifications to the results of the computer analysis for accommodating various stress and deflection criteria with consistent sets of member sizes, period, design force, and drift.

Figure D-3. Steel ductile moment resisting space frame and steel braced frame.

LOADS.

ROOF:

5-PLY ROOFING	=	6.0 P.S.F.
1" INSULATION	=	1.5
STEEL DECK	=	2.3
STEEL PURLINS	=	3.7
STEEL GIRDERS	=	1.2
CEILING	=	10.0
MISCELLANEOUS	=	1.0
DEAD LOAD	=	25.7 P.S.F

ADD FOR SEISMIC:

PARTITIONS	=	10.0
TOTAL FOR SEISMIC	=	35.7 P.S.F.

2ND & 3RD FLOORS:

FINISH	=	1.0 P.S.F.
STEEL DECK	=	3.1
CONCRETE FILL	=	32.0
STEEL BEAMS	=	5.9
STEEL GIRDERS & COLUMNS	=	1.5
PARTITIONS	=	20.0
CEILING	=	10.0
MISCELLANEOUS	=	1.0
DEAD LOAD	=	74.5 P.S.F.
LIVE LOAD	=	50.0 P.S.F.

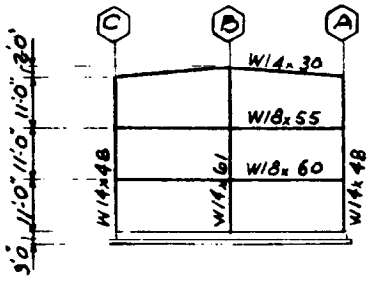

LINES 1, 4, & 7

TRANSVERSE SPECIAL MOMENT RESISTING FRAMES

SEE SHT 7

Figure D–3. Continued.

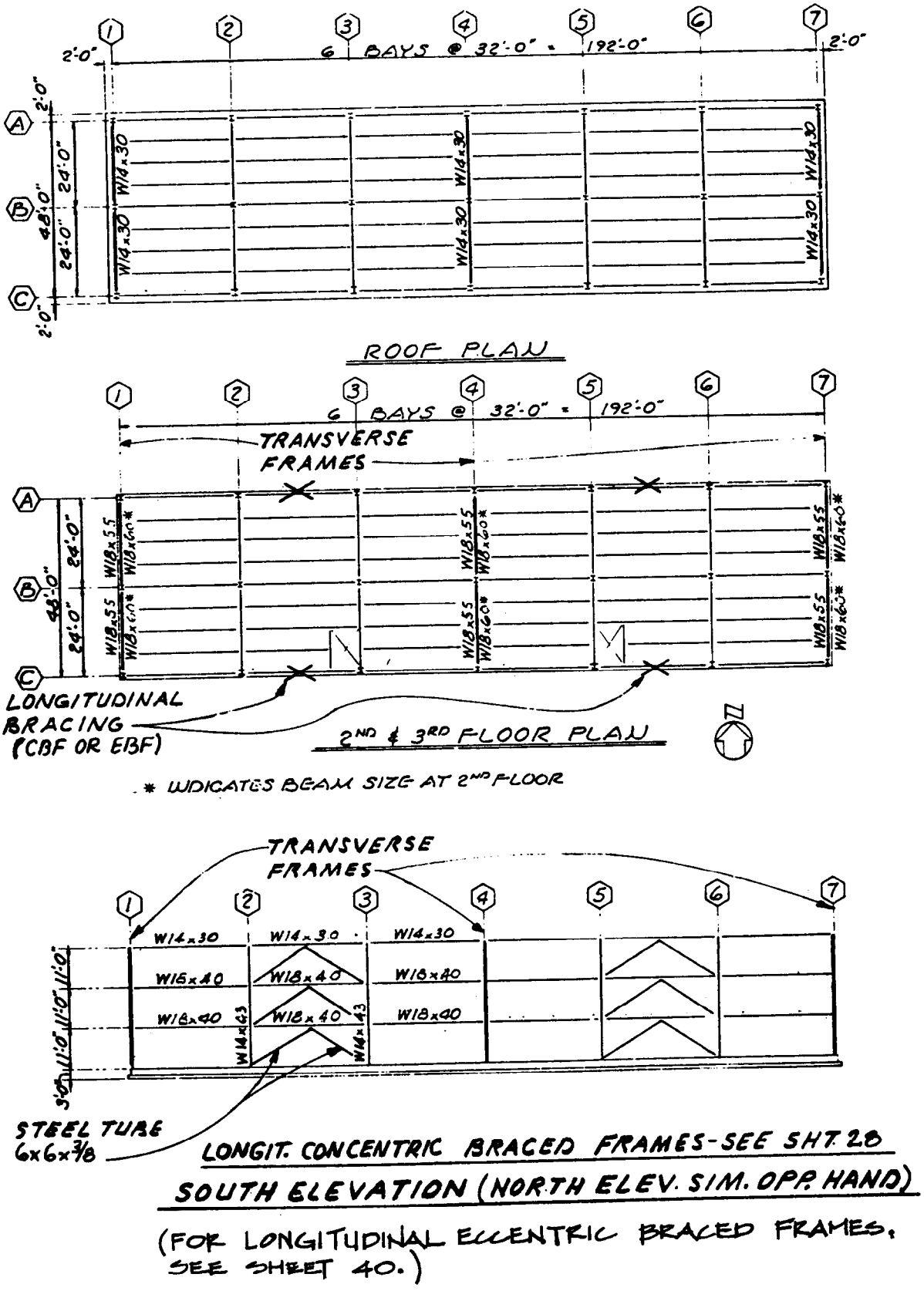

Figure D-3. Continued.

DESIGN PROCEDURE

	Example Page
A. GENERAL INFORMATION	
1. Building Layout	1-3
2. Loads for Diaphragms	5, 6
B. TRANSVERSE MOMENT RESISTING FRAMES	
1. Frame Characteristics	7
2. Building Period	8
3. Lateral Forces	10
4. Distribution of Forces to Frames	11
5. Preliminary Design	13-16
6. Criteria for Final Design	17
7. Computer Input	18
8. Computer Output	19
9. Final Design - Drift	20
10. Member Stresses	21,22
11. Girder-Column Connection	23
12. Strong Column/Weak Beam	27
C. LONGITUDINAL CONCENTRIC BRACED FRAME	
1. Lateral Forces	28
2. Vertical Forces in Members	29
3. Seismic Forces in Members	30
4. Member Sizes	31-33
5. Connections	34-36
6. Deflection	37-38
7. Final Period	39
D. LONGITUDINAL ECCENTRIC BRACED FRAME ALTERNATE	
1. Design Procedure	40
2. Lateral Forces	41
3. Typical Beam Sizing	42
4. Preliminary Frame Member Sizing	43-45
5. Braced Frame Analysis	46
6. Final Member Sizing	47-53

Figure D-3. Continued.

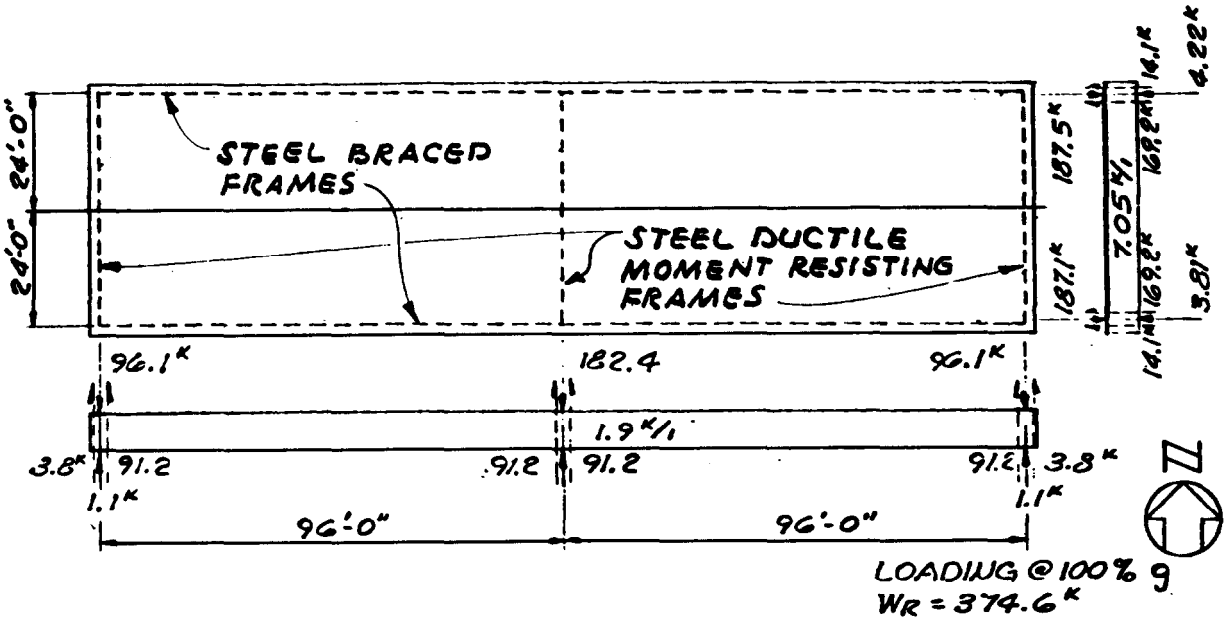

LOADS FOR ROOF DIAPHRAGM

EXTERIOR WALLS (NONSTRUCTURAL EXTERIOR COVERING)

FRACTION OF SOLID WALL-WINDOWS OUT

WALL WT. 5.3 PSF × 5.5' = 29.0 #/'

N. WALL = 29 × .75 = 22 × 192' = 4224#

S. WALL = 29 × .68 = 19.8 × 192' = 3801#

41.8 #/'

WALL WT. 5.3 PSF × 6' = 31.8 #/'

E. WALL = 31.8 × .76 = 24 × 48' = 1.152#

W. WALL = 31.8 × .76 = 24 × 48' = 1.152#

48 #/'

N-S LOADS

ROOF = 35.7 × 52' = 1856.4

WALLS = 41.8 #/'

1898.2 #/'

E-W LOADS

ROOF = 35.7 × 196' = 6997.2

WALLS = 48.0 #/'

7045.2 #/'

Figure D-3. Continued.

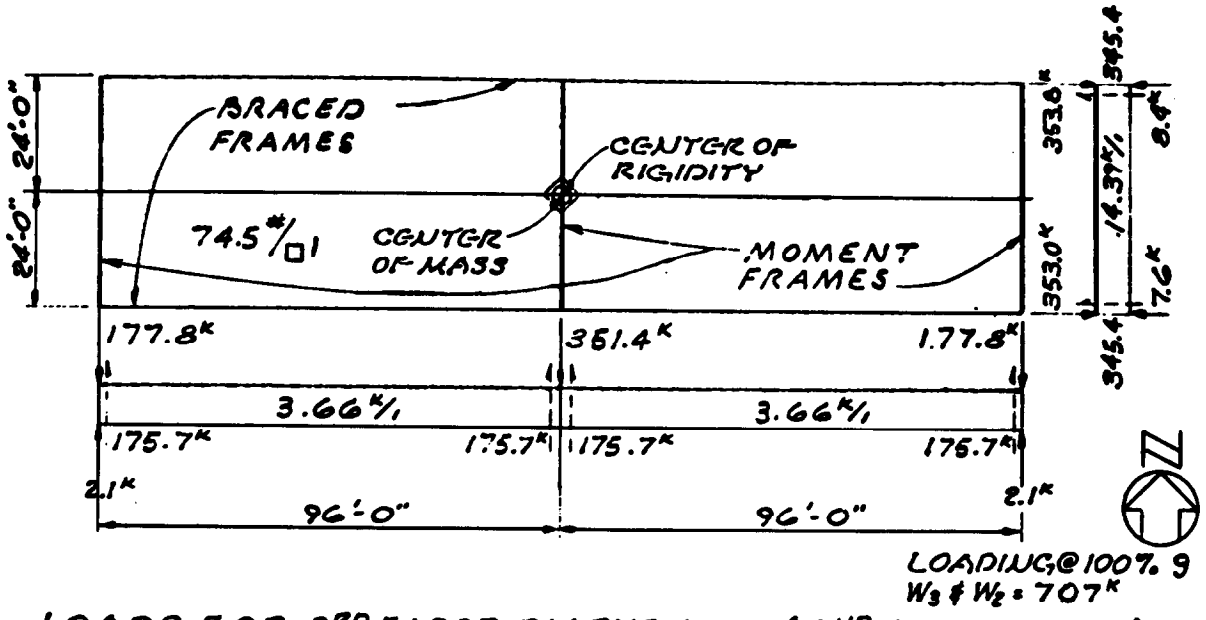

LOADS FOR 3RD FLOOR DIAPHRAGM (2ND FLOOR SAME)

FLOOR WEIGHT FOR SEISMIC = 74.5 PSF
WALL WT. 5.3 PSF × 11' = 58.3 #/'
N. WALL = 58.3 × .75 = 44 × 192' = 8448#
S. WALL = 58.3 × .70 = 39.6 × 192' = 7603#
83.6 #/'
E. WALL = 58.3 × .75 = 44 × 48' = 2112#
W. WALL = 58.3 × .75 = 44 × 48' = 2112#
88 #/'

N-S LOADS

FLOOR = 74.5 × 48' = 3576.0
WALL = 84.0
3660.0 #/'

E-W LOADS

FLOOR = 74.5 × 192' = 14304.
WALL 88.
14392. #/'

Figure D-3. Continued.

TRANVERSE (N-S) DIRECTION:

STEEL SPECIAL MOMENT-RESISTING FRAMES

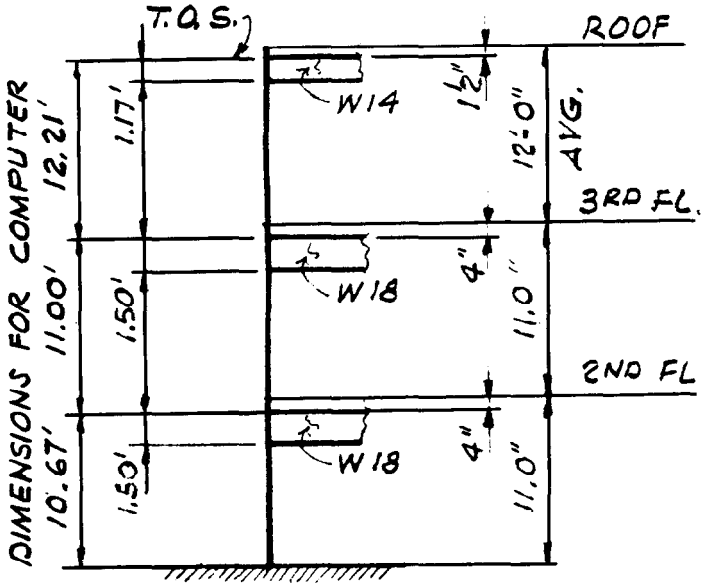

THE COLUMN BASE IS ASSUMED FIXED.

THIS IS NOT ALWAYS FEASIBLE, ACTUAL FOUNDATION CONDITIONS SHOULD BE CAREFULLY STUDIED, AND REALISTIC ASSUMPTIONS SHOULD BE MADE FOR ANALYSIS.

FRAME CHARACTERISTICS

Gravity load: The middle frame will take twice as much gravity loads as each end frame according to tributary area.

Seismic load: All three frames will have the same proportions. Assuming the roof diaphragm is flexible, and using the tributary area approach, the middle frame will take half of the seismic load at the roof level while each end frame will take one quarter. Assuming the floor diaphragms are rigid, the third floor diaphragm will distribute some of the lateral load that originates at the roof level from the middle frame to the end frames; also, because the three frames have equal stiffness, the rigid floor diaphragms will distribute one third of the load that originates at each floor to each of the three frames. The roof diaphragm is not fully flexible: the middle frame will take something less than half and the end frames something more than one quarter each of the roof load. Also the floor diaphragms are not fully rigid: the end frames will probably not get a full third of the load. The example assumes that the middle frame keeps full half of the roof load and one third of the floor loads: what is probably an excessive load from the roof tends to offset what is probably a deficient load from the floors.

Figure B-3. Continued.

FRAME CHARACTERISTICS - cont'd

Because of accidental torsion the end frames will take some torsional forces below the third floor.

The total seismic forces being nearly the same in all frames, the design will be governed by the middle frame which takes twice as much gravity load as each end frame, and the design example will be concerned with this frame, i.e. , the transverse frame on Line 4.

BUILDING PERIOD

In order to calculate lateral forces for design of the frame, the building period is needed. SEAOC provides two methods, Method A and Method B, and this example will make use of a third method, the Drift Limit Method.

Method A provides a simple formula based on the height of the building and the structural system, so it could be used as a first approximation for a preliminary design. Using C_t = 0.035 for steel frames and h_n = 34 feet, SEAOC eq 1-3 provides $T = 0.035\ (34)^{3/4} = 0.49$ seconds. Method A is intentionally conservative; it tends to be a lower bound. This is particularly noticeable with steel moment frames. It would be desirable to use a longer period in order to reduce the design forces in a more realistic representation of the building; however this must be done with care because if the period is too long the preliminary design will be undersized. The code provides a limit on T by not allowing a value of C less than 80%' of the value obtained by using T from Method A.

Method B is an accurate method, but it requires frame deflections which can be calculated only after a preliminary design is established.

The Drift Limit Method provides a period based on the assumption that the frame is so limber that it is at its maximum allowable deflection under code-prescribed loads. This provides an upper-bound period in contrast to the lower-bound period of method A. The period of a frame can be approximated by the formula $T = 2\pi\sqrt{(\delta_n/a_n)}$, where δ_n is the lateral roof displacement for the peak roof acceleration a_n. For the

Figure D-3. Continued.

BUILDING PERIOD - cont'd

equivalent static force procedure, δ_n is the roof displacement due to the prescribed forces, and a_n is approximately equal to (1.7 v/w)g, or $(1.7ZIC/R_w)g$, where $C = 1.25S/T^{2/3}$ and g is the acceleration due to gravity. The formula can be written

$$T=0.66\left(\frac{\delta_n R_w}{ZIS}\right)^{3/4}$$

with δ_n in feet.

For T > 0.7 sec., the story drift limit is $0.03/R_w$. If the deflected shape is a straight line, $\delta_n = 0.030\ h_n/R_w$. But it is not likely that the deflected shape will be a straight line. Let us assume that the average story drift is 0.80 times the maximum story drift; then, $\delta_n = 0.024\ h_n/R_w$ and

$$T=0.040\left(\frac{h_n}{ZIS}\right)^{3/4}$$

for T > 0.7 sec.

For T < 0.7 sec., the story drift limit is $0.04/R_w$ and

$$T=0.050\left(\frac{h_n}{ZIS}\right)^{3/4}$$

for T < 0.7 sec.

The example will make use of this method. With $h_n = 34$, Z = 0.4, I = 1.0, and S = 1.5, T = 0.83 sec. (T > 0.7 sec.)

Period calculations, being based on framing members, are -bare-frame- periods, that is, they do not account for the participation of nonseismic frames and nonstructural elements. For <u>force</u> calculations, the calculated period will be reduced in order to account for the stiffening effects of these frames and other elements. For this example, we will divide the drift limit period of 0.83 sec. by a factor of 1.2, a number obtained by judgment.

The design lateral forces will be based on a "whole building" period of T = 0.83/1.2 = 0.69 sec.

Note that with T_A = 0.49 see, CA = 2.75. With T = 0.69 see, c = 2.40 which is greater than 0.80 x 2.75 = 2.20.

Figure D-3. Continued

LATERAL FORCES FOR PRELIMINARY DESIGN

USE $T = 0.69$ SEC. FOR STRESS ANALYSIS.

BUILDING: A-3

DIRECTION: TRANSVERSE

$Z = 0.4$; $I = 1.0$ $R_w = 12$

$C = \frac{1.25\,s}{T^{2/3}} = \frac{1.25 \times 1.5}{(0.69)^{2/3}} = 2.40$

$W = 1789$ KIPS

$T = 0.69$ SEC.

$F_T = 0.07\,TV = 0^*$

$F_x = (V - F_T)\frac{wh}{\Sigma wh} = 1.0\,V\frac{wh}{\Sigma wh}$

$V = \frac{ZIC}{R_w}W = 0.080\,W$

$= 143$ KIPS

$^*F_T = 0$ WHEN $T \leq 0.7$ SEC.

LEVEL (1)	h FT (2)	Δh FT (3)	w KIPS (4)	Σw (5)	(2)×4 wh (6)	wh/Σwh (7)	F (8)	Σ(7) V KIPS (9)	(3)×(9) ΔOTM K-FT (10)	Σ(10) OTM K-FT (11)	(8)÷(4) F/w (12)	(9)÷(5) V/Σw (13)
						$F_T = 0$						
R	34		375	375	12,750	0.35	50.0				0.133	0.133
		12						50	600			
3	22		707	1082	15,554	0.43	61.5			600	0.087	0.103
		11						111.5	1226			
2	11		707	1789	7,777	0.22	31.5			1826	0.045	0.080
		11						143.0	1573			
										3399		* *
Σ			1789		36,081	1.00	143.0					

** ALL < 0.14, ∴ USE 0.14 FOR DIAPHRAGMS. (SEAOC 1 H2j)

Figure D-3. Continued.

DISTRIBUTION OF FORCES TO FRAMES

Since the roof diaphragm is relatively flexible, the roof forces are distributed by tributary area.

The 2nd and 3rd floor diaphragms distribute the floor forces to the frames according to their relative rigidities.

The transverse frames on lines 1, 4 and 7 are alike, and for preliminary design we may take their rigidity proportional to

see page 1

$$K_1 = \frac{1/3(\text{BASE SHEAR})}{\text{DRIFT}} = \frac{1/3(143)}{0.0025(34')} = 561 \text{ k/ft}$$

see page 9

The longitudinal frames on lines A and C have a rigidity based on preliminary trials:

see page 2.1

$$K_A = \frac{1/2(\text{BASE SHEAR})}{\text{DRIFT}} = \frac{1/2(250)}{0.30''/12} = 5000 \text{ k/ft}$$

prelim calcs (not shown)

Use Rel. $K_1 = 1$ and Rel. $K_A = \frac{5000}{561} = 8.91$, *say* 9

Because of symmetry there is no "calculated" torsion. The "accidental" torsion is the story force, F, times the nominal eccentricity of 5% of the max. building dimension: perpendicular to the direction of force under consideration:

FOR forces in the transverse direction.

$$M_t = F_{transv.} \times 0.05 \times 192' = 9.6 F_{transv.}$$

$$\text{TORSIONAL SHEAR} = \frac{Kd}{\Sigma Kd^2} 9.6 F_{transv.}$$

FOR forces in the longitudinal direction.

$$M_t = F_{long} \times 0.05 \times 48 = 2.4 F_{long.}$$

$$\text{TORSIONAL SHEAR} = \frac{Kd}{\Sigma Kd^2} 2.4 F_{long.}$$

$$= \frac{216}{28{,}800} \times 2.4 F_{long} = 0.02 F_{long}$$

Figure D-3. Continued

DISTRIBUTION OF FORCES – CONT.

FRAME	REL K	d	Kd	Kd^2	DIRECT SHEAR	TORSIONAL SHEAR	DESIGN SHEAR
1	1	96	96	9216	.33 F_T	± .03 F_T	.36 F_T
4	1	0	0		.33 F_T	0	.33 F_T
7	1	96	96	9216	.33 F_T	∓ .03 F_T	.36 F_T
			192				
A	9	24	216	5184	.50 F_L	± 0.02 FL	0.52 FL*
C	9	24	216	5184	.50 FL	∓ 0.02 FL	0.52 FL
			432				
				Σ=28,800			

*THESE WILL BE USED FOR DESIGN OF THE LONGITUDINAL FRAMES. SEE P. 28.

DISTRIBUTION TO TRANSVERSE FRAMES

FRAME	1	4	7
ROOF (BY TIBUTARY AREA)			
50.0	x .25 = 12.5	x .50 = 25.0	x .25 = 12.5
3RD. (BY REL. RIGIDITY)			
61.5	x .36 = 22.1	x .33 = 20.3	x .36 = 22.1
2ND.			
31.5	x .36 = 11.3	x .33 = 10.4	x .36 = 11.3
143.0^K	45.9^K	55.7^K	45.9^K

Figure D-3 Continued

MEMBER FORCES BY PORTAL METHOD - FRAME 4

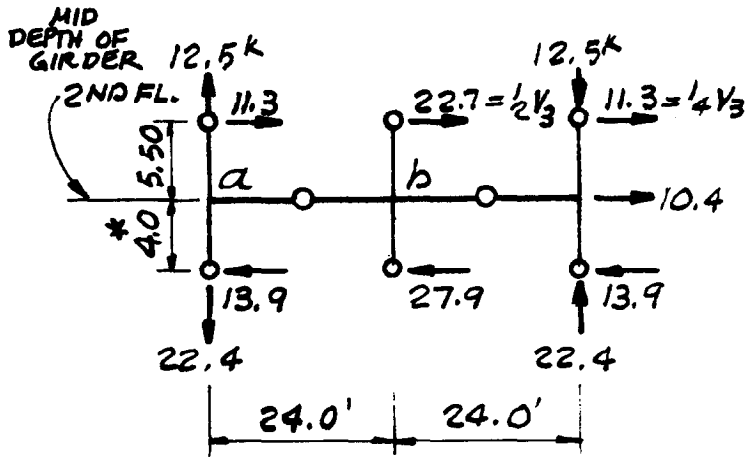

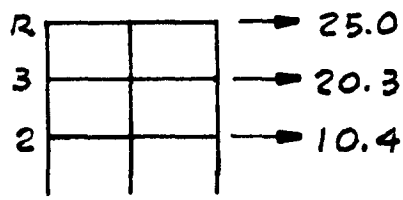

FRAME FORCES

EXTERIOR COLUMN, (MOM. AT ℄ GIRD.)

ABOVE a, $M = 11.3^K \times 5.50' = 62.2$

BELOW a, " $= 13.9^K \times 4.0' = 55.6$

$117.8^{K'}$

INTER. COLUMN (MOM. AT ℄ GIRD)

ABOVE b, $M = 22.7 \times 5.50 = 124.9$

BELOW b, " $= 27.9 \times 4.0 = 111.6$

236.5^K

GIRDER (MOM. AT ℄ COL.)

$M_a = 117.8 \quad M_b = \frac{236.5}{2} = 118.3$

$V = \frac{117.8 + 118.3}{24'} = 9.84^K$

* ESTIMATED LOCATION OF INFLECTION CONSIDERING FIXITY OF BASE.

AT UPPER POINT OF INFLECTION, **

$M = (25.0^K \times 18.6'^{**}) + (20.3^K \times 6.7'^{**})$

$= 601^{K'}$

$\text{AXIAL} = \frac{601^{K'}}{48} = 12.5^K$

AT LOWER P. I.

$M = 601 + (45.3 \times 9.5) + (10.4 \times 4.0)$

$= 1073^{K'}$

$\text{AXIAL} = \frac{1073}{48} = 22.4^K$

**18.6' IS APPROXIMATE DISTANCE FROM ROOF TO POINT OF INFLECTION. 6.6' IS APPROXIMATE DISTANCE FROM TOP OF 3RD FLOOR SLAB TO POINT OF INFLECTION.

Figure D-3. Continued.

PRELIMINARY DESIGN - CONT. FRAME 4

INTERIOR COLUMN

a. VERTICAL LOAD ON CENTER FRAME

ROOF DL: $0.0257^{KSF} \times 24' \times 32' = 19.8$

3RD FLR. DL+LL $= (0.0745 + 0.021) \times 24 \times 32' = 73.3$

2ND FLR. RED. LL ✓ $= 73.3$

$W = 166.4^K$

BY SYMMETRY, $M = 0$

b. SEISMIC LOAD, FROM P. 13

$P = 0$

$M = 27.9^K \times (4.00 - 0.75) = 90.7^{K\text{-}ft}$ AT FACE OF GIRDER

c. VERTICAL + SEISMIC

$P = 166 + 0 = 166^K$

$M = 0 + 90.7 = 90.7^K$

USE AISC 9TH EDITION, P. 3-9

TRY W14 × 61, P. 3-24 $B_x = 0.194$

$$P_{EQUIV.} = \frac{166^K + 0.194(90.7 \times 12''/1)}{1.33} = 284^K$$

FOR $h' = 9.5'$ $\frac{W14 \times 61}{I = 640}$ ALLOWS 334^K

EXTERIOR COLUMN

VERTICAL + SEISMIC

$P \simeq 166/2 + 22.4 = 105^K$

$M \simeq 50^{K\text{-}I}(est) + 90.7/2 = 95^{K\text{-}I}$ $\Big\}$ $P_{EQUIV.} = 246$

$\frac{W14 \times 48}{I = 485}$ ALLOWS 246^K

USE 14" COLUMNS FOR CONTROL OF DEFLECTIONS AND USE THE SAME SECTION FULL HEIGHT.

Figure D–3. Continued.

PRELIM. DESIGN - CONT. FRAME 4

GIRDER - 2ND FLOOR

VERTICAL LOAD AT CENTER COLUMN

$R = 0.08 \times 32 \times 24 = 61.4\%$ OR $23.1(1 + 74.5/50) = \underline{57.5}\ \%$

RED.LL $= 0.425 \times 50 = 21$ PSF $(1 - 0.575 = 0.425)$

$w_{D+L} = (0.0746 + 0.021) \times 32' = 2.38 + 0.67 = 3.05^{K}/1$

$W_{D+L} = 3.05 \times 24' = 73.2^{K}$

$M \approx \frac{WL}{12} = \frac{73.2 \times 24}{12} = 146.4$

SEISMIC $M = \underline{118.3}$

VERT. + SEISMIC $M = 265$

USE AISC BEAM CHART, p. 2-166, 9TH ED., WITH $M = \frac{265}{1.33} = 199^{K'}$, AND UNBRACED LENGTH OF 6' FOR NEG. BENDING

$\frac{W18 \times 60}{I = 986}$ ALLOW $216^{K'}$

Figure D-3. Continued.

PRELIM. DESIGN - CONT. FRAME 4

GIRDER - 3RD FLOOR

VERTICAL LOAD - SAME AS 2ND, $M = 146^{K'}$

SEISMIC

$V_R = 25.0$ — 6.25^K TO EXT. COL. / 12.5^K TO INT. COL.

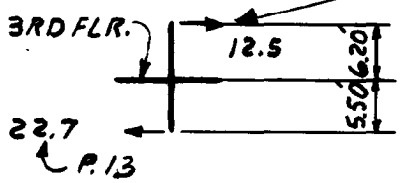

Σ COL. $M = (12.5^K \times 6.2') + (22.7 \times 5.5)$
$= 202^{K'}$

GIRDER $M = \frac{202}{2} = 101^{K'}$

VERT. + SEISMIC = $M = 146 + 101 = 247 \div 1.33 = 186^K$

W18x55 ALLOW 197

GIRDER - ROOF

VERTICAL LOAD

ROOF DL+LL = $32'(0.0257 + 0.020) = 0.82 + 0.64 = 1.46^{K/'}$

$W_D = 0.82 \times 24' = 19.7^K$ $M = \frac{19.7 \times 24'}{12} = 39.4^{K'}$

SEISMIC

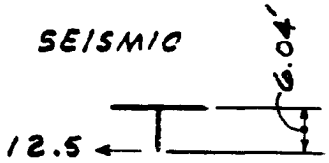

GIRDER $M = \frac{12.5 \times 6.04}{2} = 37.8$

VERT. + SEISMIC = $M = 39.4 + 37.8 = 77.2 \div 1.33 = 58.0^{K'}$

W14x22 ALLOW 58 OK FOR STRESS

USE W14x30 ALLOW 83 USE WIDER FLANGE FOR BETTER DETAILS

Figure D–3. Continued.

CRITERIA FOR FINAL DESIGN – FFAME 4

1. BUILDING PERIOD

a. For calculating frame design forces, use the whole building period estimated as T = 0.69 sec. (P. 9)

b. For calculating drift, use the bare frame period. This will be obtained from the computer analysis or from the use of Method B. Method B will give a frame period of 0.83 sec.

2. DESIGN FORCES

As indicated item 1a above, use the building period of T = 0.69 sec. and the associated base shear of 143^k and frame shear of 55.7^k (p. 12). This is the input for the computer analysis (P. 18).

3. DEFLECTIONS

The deflections obtained from this analysis, based on whole building forces, will be modified for the calculation of drift under bare–frame forces (P.20) .

Figure D-3. Continued.

FRAME ANALYSIS — FRAME 4

COMPUTER INPUT

KIPS, FEET, SECONDS

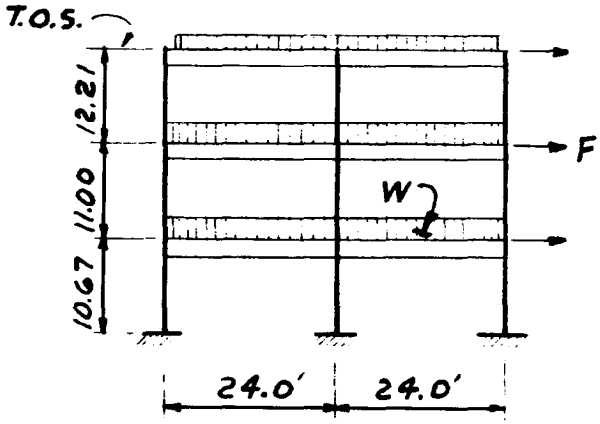

RIGID FRAME.
STEEL: E = 4,176,000 KSF
COLUMN BASES FIXED.

	EXT. COL.	INT. COL.
SIZE	W14x48	W14x61
I	0.0234	0.0309
A	0.0979	0.1243
Aw	0.0325	0.0365

LEVEL	GIRDER						TRIB W	MASS = W/g	LATERAL FORCE
	SIZE	I	A	Aw	W_{DL}	W_{LL}			
R	W14x30	0.0140	0.0613	0.0260	0.82	0.64	187^K	5.81	25.0
3	W18x55	0.0430	0.1125	0.0491	2.38	0.67	233	7.24	20.3
2	W18x60	0.0476	0.1229	0.0527	2.38	0.67	233	7.24	10.4
DATA FROM PAGE					14 & 15		5 & 6		11

TRIB. ROOF WT. IS ½ OF TOTAL SINCE DIAPH. IS FLEXIBLE
TRIB. FLOOR WT. IS 0.33x TOTAL ACCORDING TO REL. RIG. OF FRAMES. g = 32.2 FT./SEC.^{2}

Figure D-3. Continued.

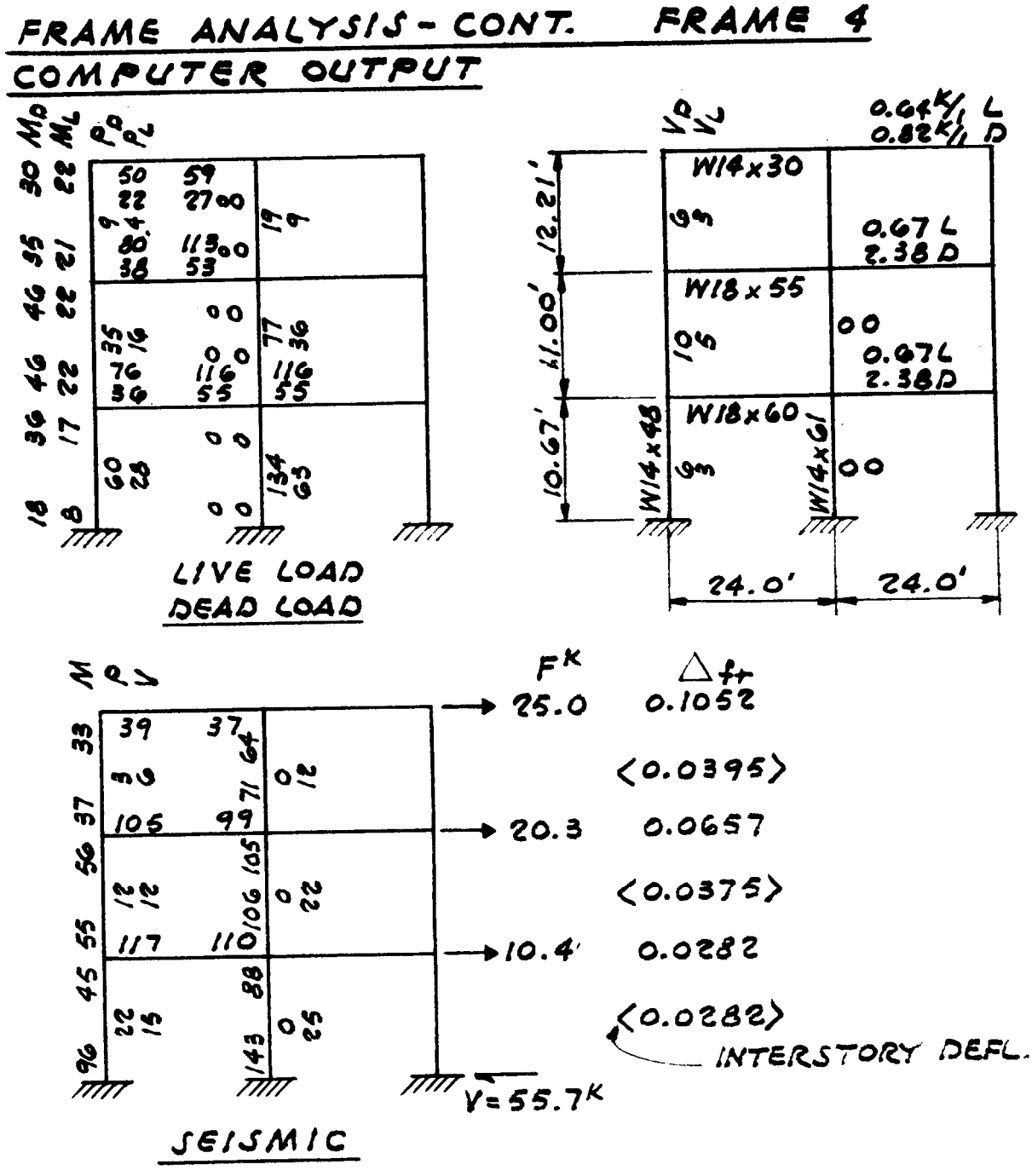

RIGIDITY: $K = \frac{V}{\Delta_R} = \frac{55.7}{0.1052} = 529\ ^{K}/_{ft}$

Figure D-3. continued.

FINAL DESIGN - CONT. FRAME 4 - DRIFT

Before proceeding with the detailed final design, we will check the drift.

From the computer analysis, the maximum drift is *0.0395* ft. (p. 19). This is based on the whole building period T = 0.69 sec. and the frame shear of 143^k (p. 10) .

For the drift check, use the deflection associated with the bare frame period T = 0.83 sec. (p. 9).

$c = (1.25 \times 1.5)/(0.83)^{2/3} = 2.12$
$Cs = ZIC/R_w = (0.4 \times 1.0 \times 2./2)/12 = 0.071$

Base Shear = $(0.071 \times 1789 = 127^k$

Multiply deflections from frame analysis by the ratio 127/143 = 0.89

Maximum drift = 0.89 x 0.0395′= 0.035

Allowed drift = (0.03/12)x12′ = 0.030′ (T = 0.83 > 0.7)

The frame drift is 17% over the limit. It should be stiffened. There are three options:

(1) increase the member sizes
(2) use more than three frames
(3) make the roof diaphragm rigid

We will change the interior column to W14X68 and proceed with the detailed design. Further changes may be necessary, and we will make a final drift check after other checks are completed.

Note that the assumed condition of fixed columns bases is difficult to achieve. If the bases are not fully fixed, the frame will be more flexible than assumed, and the frames would have to be further stiffened.

Figure D-3. Continued.

FINAL DESIGN - CONT. FRAME 4

MEMBER STRESSES

(1) SAMPLE CALCULATION FOR 2ND FLR. GIRDER

	M_D	M_L	M_E	M_{D+L}	$\frac{M_{D+L+E}}{1.33}$
AT EXT. COL.	76	36	117	112	172
AT INT. COL.	116	55	110	171	211

DES. M = 211 K' UNBRACED LENGTH = 6'

W18 x 60 ALLOW M = 216 K' AISC 9TH ED., P. 2-166

PROVIDE GIRDER BRACING PER SEAOC 4F8:

MAX UNBRACED LENGTH = $96 r_y$

$= \frac{96(1.69)}{12} = 13.5$ FT. > 6 FT.

BRACING IS ADEQUATE

(2) SAMPLE CALCULATION FOR COLUMN,

SEE NEXT PAGE.

Figure D-3. Continued.

FINAL DESIGN - CONT. - FRAME 4

MEMBER STRESSES - CONT.

2.) SAMPLE CALCULATION FOR COLUMNS FIRST STORY AT BASE

$K_Y = 1.0$ (COLUMNS ARE BRACED BY BEAMS)

USE $K_X = 1.0$ PER SEAOC 4D3

COL. SHOULD ALSO BE CHECKED FOR SEAOC 4D3. THAT PROVISION WILL NOT GOVERN IN THIS EXAMPLE, BUT WILL BE ILLUSTRATED IN THE BRACED FRAME EXAMPLE

	EXT.		INT.	
	W14x48		W14x68	
	A = 14.1, S = 70.2		A = 20.0, S = 103	
	P	M	P	M
D	60	18	134	0
L	28	8	63	0
D + L	88	26	197	0
E	22	96	0	143
$\frac{D+L+E}{1.33}$	83	92	148	108
f_a	5.89 KSI		7.40 KSI	
f_b	15.7 KSI		12.6 KSI	
K_x	1.0		1.0	
ℓ	119"		119"	
r_x	5.85"		6.01	
$K\ell/r_x$	20.3		19.8	
F_a	28.3		28.3	
K_y	1.0		1.0	
ℓ	119		119	
r_y	1.91		2.46	
$K\ell/r_y$	62.3		48.6	
F_a	22.3		24.6	
F'_{ex}	362		381	
F_{bx}	33.0		33.0	
f_a/F_a	0.264		0.301	
f_b/F_b	0.476		0.382	
$\left\{ C_{MX} / \left(1 - \frac{f_a}{F'_{ex}}\right) \right\} \times (f_b / F_b)$	0.411		0.331	
	0.675		0.632	
$\frac{f_a}{0.6F_y} + \frac{f_b}{F_b} =$	0.672		0.629	

ALL SUMMATIONS < 1.0 OK

Figure D-3. Continued.

GIRDER-COLUMN CONNECTION

Girder data W18X60 Gr. 36

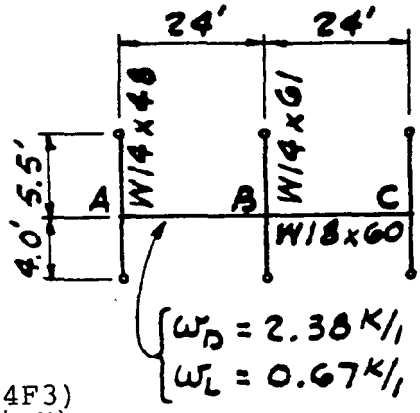

Girder strenath in flexure

This is $M = ZF_Y$ (SEAOC 4C2)
This is the same as plastic moment M_P given in the in the AISC Plastic Design Selection Table:

Girder stabilitv W18X60

$b/2t_f = 5.44 < 52/\sqrt{36} = 8.66$ (SEAOC 4F3)
$d / t_w = 43.5 < 412/\sqrt{36}$ 68.7 (AISC Ch.N)

Requirements for girder-column connection

SEAOC 4F1a requires development of the lesser of the strength of the girder in flexure (M_S) and the moment associated with the panel zone shear strength. The requirement of this manual is to develop the strength of the girder in flexure. This is accomplished according to SEAOC 4F1b.

Girder flange connection to column

Provide full butt-weld connections of the flanges to the columns . (SEAOC 4F1b(l))

Girder web connection to column

Design shall be based on the gravity loads plus the seismic load associated with compliance with SEAOC 4F1a. (SEAOC 4F1b(2))

Vert. shear: V_G = (2.38+0.67)24'/2 + (171-112)/24'= 39.1
Seismic shear = $2M_S/L$ = 2x369k'/22.83' =32.3
Design V = 71.4k

The method of developing the flexural capacity of the web depends on the relative size of the flanges, i.e., whether the flange strength ($bt_f(d-t_f) \times F_Y$) is greater or less than 70% of the total strength ($0.7Z_XF_Y$)

Figure D-3. Continued

GIRDER–COLUMN CONNECTION

Girder web connection to column – cont.

$b = 7.555''$; $t_f = 0.695''$; $d = 18.24''$: $Z_x = 123 in^3$

For 70% of entire section:
$0.7\ Z_x = 0.7 \times 123 = 86 in^3$

For the flanges alone:
$bt_f(d-t_f) = (7.555'')(0.695'')(18.24-0.695'') = 92.12\ in^3$

As 92.12 > 86, the connection can be made by welding and/or high–strength bolting according to (SEAONC 4F1b(2) (a)

If the chosen girder had had flange strength less than 70% of the total strength, the conventional web connection would have had to be supplemented with additional welding (to the web at the top and bottom of the shear tab on the column) according to SEAOC 4F1b(2) (b).

Girder web connection design

Assume 1" A325–SC bolts are selected,

Use 4 bolts: Bolt Strength, V = 4 x 1.7 x 13.7
= 93.2k > 71.4

Shear plate:

$Z = 0.3125\ (12.5)2/4 = 12.2\ in^3$
$f = 71.4k \times 2''/12.2 = 11.7\ ksi < 36$
$v = 71.4/(0.3125 \times 12.5) = 18.3\ ksi < 0.55 \times 36 = 19.8$

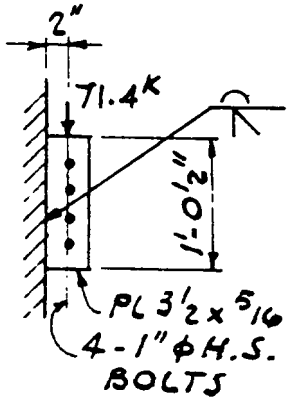

Figure D-3. Continued.

GIRDER-COLUMN CONNECTION

Girder-column Pane1 zone -- Sample talc. for Joint B

Pane1 zone Strength (SEAOC 4F2)

This is the moment corresponding to the development of the panel zone shear strength. This moment shall be the moment due to gravity loads plus 1.85 times seismic loads but need not exceed 0.8 times the summation of M_s at the beams.

Calculate moment arm between girder flanges:

$d - t_f = 18.24 - 0.69 = 17.55''$

Pane 1 zone shear:

Gravi tv + 1.85 x seismic

One side of column, with D + L:

$M_{D+L} = 171$; $1.85\ M_E = 1.85 \times 110 = 204$

Other side, with D:

$M_D = -116$; $1.85\ M_E = 204$

Sum of girder moments = 171 + 204 -116 + 204 = 463

$0.8\ M_s$

Sum of girder moments = 2 x 0.8 X 369 = 590 k′

Use panel zone strength associated with 463 k′ .

(See SEAOC 4F10 for Drift calculations.)

Shear

One side, top flange force = (171+204)(12)/17.55"
= 256 K

Other side, top flange force = (-116+204)(12)/17.55"
= 60 k

Column shear above joint:

sum girder moments = 463
column height = 4.0 + 5.5 = 9.5′
column shear = 463 / 9.5 = 49 k

Shear = 256 + 60 - 49 = 267 K

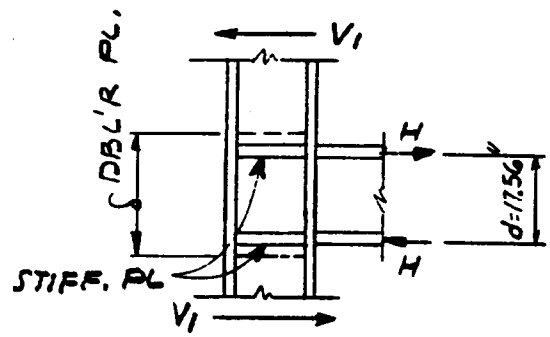

Figure D-3. Continued.

GIRDER-COLUMN CONNECTION -- Joint B -- cont.

Panel zone thickness

For thickness, t′, the panel zone can develop

$$V_j = 0.55\ F_y dt' \quad \text{(modified SEAOC formula 4-1)}$$

where t′ is the effective thickness which consists of the combined thickness, t, of the web and doubler plate modified by the contribution of the the column; flanges (see below)

For W14 x 68 Grade 50 column

$$V_j = 0.55\ (50)\ (14.04)t' = 386t' \text{ kips}$$

For joint shear of 235 k,
req′d t′ = 267/386 = 0.69"

$$t' = t\ [1 + 3b_c t_{cf}^2/d_b d_c t]$$
$$= t\ [1 + 3(10.03)(0.72)^2/(18.24)(14\ .04)t]$$
$$= t\ [1 + 0.061/t] = t + 0.061$$

$$0.69'' = t + 0.06$$
$$t = 0{,}63''$$

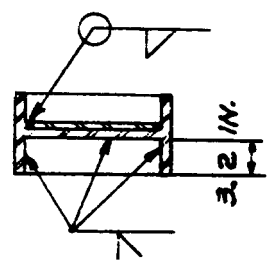

For column web thickness of 7/16″ req′d thickness of doubler plate = 0.63" – 7/16 = 0.19"

Use a 1/4″ minimum Grade 50 doubler plate, or consider using a column with a thicker web.

Check SEAOC 4F2b:

$d_z = d - 2t_f = 18.24 - 2 \times 0.695 = 18.10$ (from girder)
$W_z = 14.04 - 2 \times 0.720 = 12.50$ (from column)

$$(d_z + w_z)\ /\ 90 = 0.34 < 0.63'' \text{ OK}$$

Continuity plates

Provide continuity plates per SEAOC 4F2c

Figure D-3. Continued.

FINAL DESIGN - CONT. - FRAME 4 - STRONG COLUMN/WEAK BEAM

$$\Sigma Z_c (F_{YC} - f_a) / \Sigma Z_b f_{yb} > 1 \text{ (SEAOC 4F5)}$$

Interior column, second floor (Joint "b", p. 13)

W14X68: A = 20.0. $Z_c = 115$

$P_{D+L+E} = 166$

$f_a = 166/20.0 = 8.30$

The girder is W18X60, with $Z_b = 123$

2(115) (36-8.30)/2(123) (36) = 0.72 which is < 1

Change to Grade 50 steel (make both columns Gr. 50).

2(115)(50-8.3)/2(123)(36) = 1.08 which is > 1

Exterior column, second floor (Joint " a")

W14x48: A = 14.1, $Z_c = 78.4$

$P_{D+L+E} = 105$ (p.14)

$f_a = 105/14.1 = 7.45$ ksi

The girder is W18X60, with $Z_b = 123$

With one column above the joint and one below,

2(78.4)(50-7.45)/123(36) = 1.50 which is > 1

For both columns $f_a < 0.4(36) = 14.41$; therefore, the columns are not required to be stronger than the beams: however, strong column/weak beam design is Strongly recommended.

Figure D-3. Continued.

LONGITUDINAL DIRECTION: STEEL BRACED FRAMES

LATERAL FORCES

BUILDING: A-3

DIRECTION: LONGITUDINAL

$Z = 0.40 \quad I = 1.0 \quad R_w = 8$

$C = \frac{1.25(1.2)}{(0.28)^{2/3}} = \cancel{3.50} \rightarrow$ USE 2.75

$W = 1789$ KIPS

$T = 0.02(34)^{3/4}$

$= 0.28$ SEC.

$F_t = 0.07TV = 0\ V^*$

$F_x = (V - F_t)\frac{wh}{\Sigma wh} = 1.0\ V\frac{wh}{\Sigma wh}$

$V = \frac{ZIC}{R_w} W = \frac{(.40)(1)(2.75)}{8} W = 0.137W,$ SAY $0.14W = 250K$

$* F_t = 0$ WHEN $T \leq 0.7$ SEC.

LEVEL (1)	h FT. (2)	Δh FT. (3)	W KIPS (4)	Σ W (5)	(2)×(4) Wh (6)	Wh/ΣWh (7)	F KIPS (8)	Σ(7) V KIPS (9)	(3)×(9) ΔOTM K-FT. (10)	Σ(10) OTM K-FT. (11)	(8)÷(4) F/W (12)	(9)÷(5) V/ΣW (13)
						$F_t = 0$						
R	34		375	375	12,750	0.35	88				.235	.235
		12						88	1056			
3	22		707	1082	15,554	0.43	107			1056	.151	.180
		11						195	2145			
2	11		707	1789	7,777	0.22	55			3201	.078	.140
		11						250	2750			
										5951		
		Σ	1789		36,081	1.00	250					

Figure W. Continued

BRACED FRAME - CONT.

VERTICAL FORCES ALL EXCEPT ROOF LL

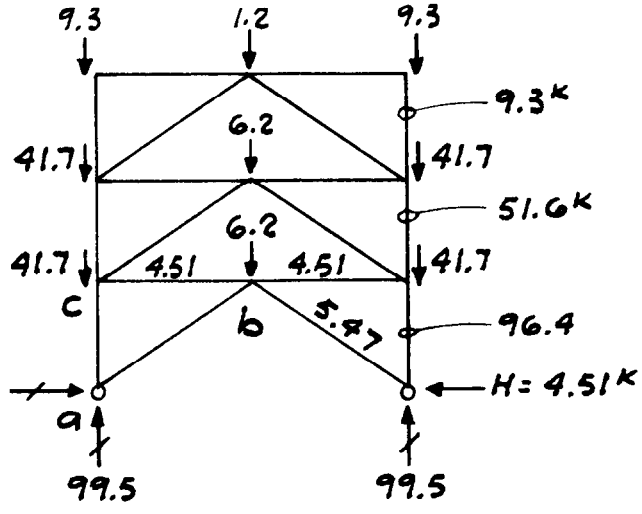

TRIB. AREA AT COLUMN

TRANSV. GIRDER : 9' x 32' = 288
EDGE BEAM $\left(\frac{32}{2}+\frac{16}{2}\right)$ x 3' = 72 } 360 SF

TRIB. AREA AT BRACE 16' x 3' = 48 SF

LOADS AT COLUMNS (REDUCED LL) AT BRACES

ROOF (25.7 PSF + 0) x 360 SF = 9.3K x 48 SF = 1.2K
FLOOR (74.5 + 36) x 360 SF = 39.8 } 41.7K x 48 SF = 5.3K } 6.2K
WALL (5.3 PSF x 11') x 32' = 1.9 x 16' = 0.9

BRACE FORCE = $V = \frac{6.2}{2} = 3.1$ $H = \frac{16'}{11'}(3.1) = 4.51^K$

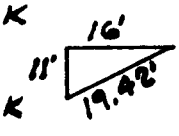

AXIAL FORCE = $\frac{19.4}{11}(3.1) = 5.47^K$

FULL LOADS =

ROOF $P_D = 9.3^K$ $P_L = 7.2^K$

FLOOR $P_D = 28.7^K$ $P_L = 18.0^K$

Figure D-3. Continued.

BRACED FRAME - CONT.

SEISMIC FORCES

FRAMES SHARE ROOF LOAD ACCORDING TO TRIBUTARY AREA. AT FLOORS THE FRAMES TAKE 0.52 x STORY FORCE (P.12).

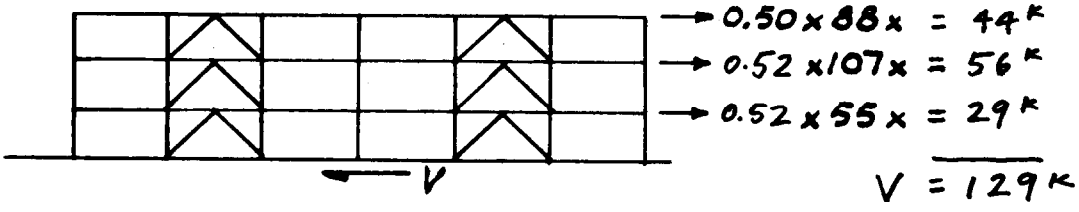

APPLY 1/2 FORCE TO EACH BRACED BAY

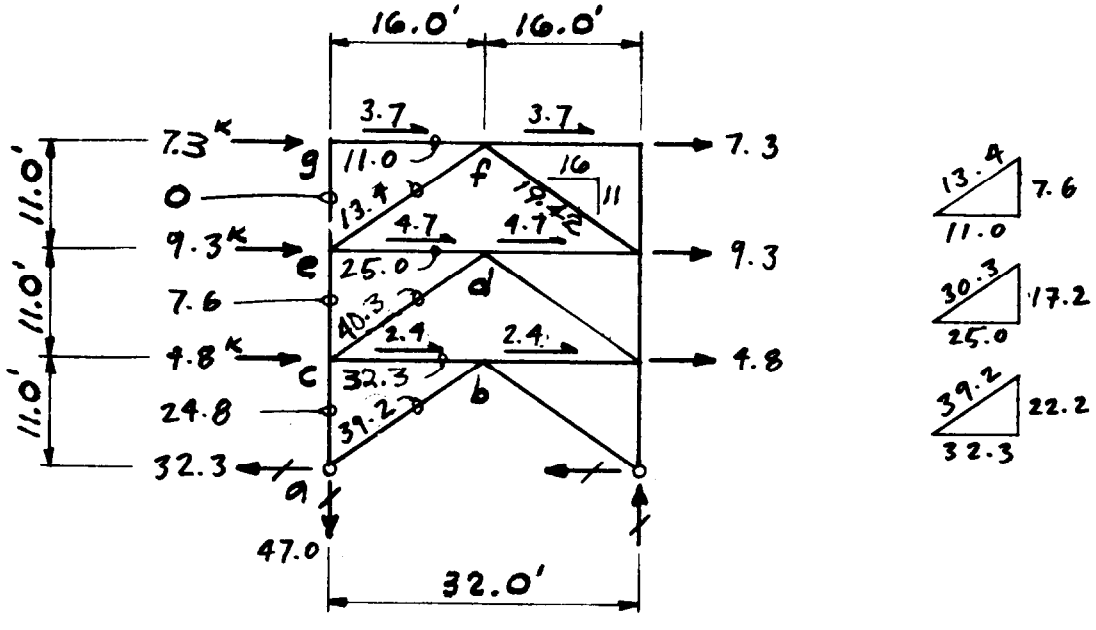

TYPICAL BRACED BAY

SEISMIC FORCES

DESIGN CHEVRON BRACE MEMBERS FOR 1.5x SEISMIC FORCES.

Figure D–3. Continued.

BRACED FRAMES CONT

MEMBER SIZES

BRACE (FIRST STORY)

CHEVRON BRACE

SEAOC 4G

$P_E = \pm 39.2$ DESIGN $F = 1.5 \times 39.2 = 58.8$

$P_D = -5.5$ (p.29)

BRACE FORCE, $P_B = -5.5 \pm 58.8 \begin{cases} +53.3 \\ -64.3 \end{cases}$

$\frac{L}{r} \leq \frac{720}{\sqrt{F_y}} = \frac{720}{\sqrt{46}} = 106$ (SEAOC 4G1a)

TS 6 x 6 x 3/8 $r = 2.27$

$\frac{L}{r} = \frac{228}{2.27} = 100 < 106$ OK

$P_a = 115^k$ AISC ASD p. 3-42

$\beta = 1 \Big/ \left[1 + \frac{Kl/r}{2C_c}\right] = 1 \Big/ \left[1 + \frac{100}{2(112)}\right] = 0.69$ (SEAOC 4G1b)

$(P_a)_{Brace} = 0.69 \times 115 = 79.5 > 64.3$

CHECK $\frac{b}{t}$ OF TUBE WALL

ASD CHAPT. N: $\frac{190}{\sqrt{F_y}} = 28$

$b = 6 - 2\left(\frac{3}{8}\right) = 5\,1/4$

$b/t = \frac{5\,1/4}{3/8} = 14 < 28$

Figure D-3 Continued.

BRACED FRAMES CONT.

COLUMN (SEAOC 4D1)

TRY W14 x 43 FOR COMPATIBILITY WITH OTHER COLUMNS

$$P_c = 1.0\,P_{DL} + 0.7\,P_{LL} + 3\left(\frac{R_w}{8}\right)P_E$$

$$= 1.0\,(66.7) + 0.7\,(43.2) + 3\left(\frac{8}{8}\right)(39.2) = 215^k$$

$L = 10;\ F_y = 36$

ASD p. 3-24

$$P_{allow} = 1.7\,(215) = 366^k > 215 \text{ OK}$$

NOTE:

THIS IS A CHECK FOR COLUMN STABILITY. NO BENDING MOMENTS ARE INCLUDED IN THIS CHECK. FOR SITUATIONS WITH LARGE COLUMN BENDING, A STANDARD COLUMN CHECK INCLUDING BENDING AND CODE LEVEL AXIAL FORCE MAY GOVERN OVER THIS.

COLUMN SPLICES

DESIGN FOR THE FOLLOWING TENSION:

$$P_t = 0.85\,P_{DL+LL} - 3\left(\frac{R_w}{8}\right)P_E$$

$$= 0.85\,(66.7) - 3\left(\frac{8}{8}\right)(39.2) = -60.9^K$$

Figure D–3. Continued.

BRACED FRAME - CONT.

MEMBER DESIGN - CONT.

EDGE BEAMS - FULL LATERAL BRACING BY STEEL DECK. ASSUME WALL LATERAL LOADS TRANSMITTED DIRECTLY TO THE STEEL DECK: NO TORSION OR HORIZONTAL LOAD.

BEAM WITHOUT DIAGONAL BRACE $L = 32'$

BEAM MUST STILL CARRY VERTICAL LOAD EVEN IF THE BRACES SHOULD FAIL IN A LARGE EARTHQUAKE. SEAOC 4G3a (3)

FLOOR

$$\left.\begin{array}{l} W = (0.745 + .050\ \text{KSF}) \times 3' \times 32' = 12.0 \\ \text{WINDOW}\ \ 0.0053\ \text{KSF} \times 11' \times 32' = 1.9 \end{array}\right\} 13.9^{K}$$

W18x40

BEAM WITH BRACE $L = 16'$

$$\left.\begin{array}{l} \text{ROOF USE W14x30} \\ \text{FLOOR USE W18x40} \end{array}\right\} \text{FOR CONSISTENT DETAILS WITH UNBRACED BAYS}$$

$$\text{FLOOR} = 3' \times (74.5 + 50\ \text{PSF}) = 373.5\ \#/'$$

$$\text{WALL} = 5.3\ \text{PSF} \times 11' = 58.3\ \#/'$$

$$w = .432\ K/'$$

$$\text{VERT. } W = .432^{K/'} \times 16' = 6.90^{K}$$

$$M = \frac{6.90 \times 16'}{8} = 13.8^{K'}$$

$$f = \frac{13.8 \times 12}{68.4} = 2.42\ \text{KSI LOW}$$

$$\text{AXIAL } P = +4.51 \pm 32.3 = \begin{cases} +36.8 \\ -27.7 \end{cases}$$

$$f_a = \frac{36.8}{11.8} = 3.12\ \text{KSI LOW}$$

Figure D-3. Continued

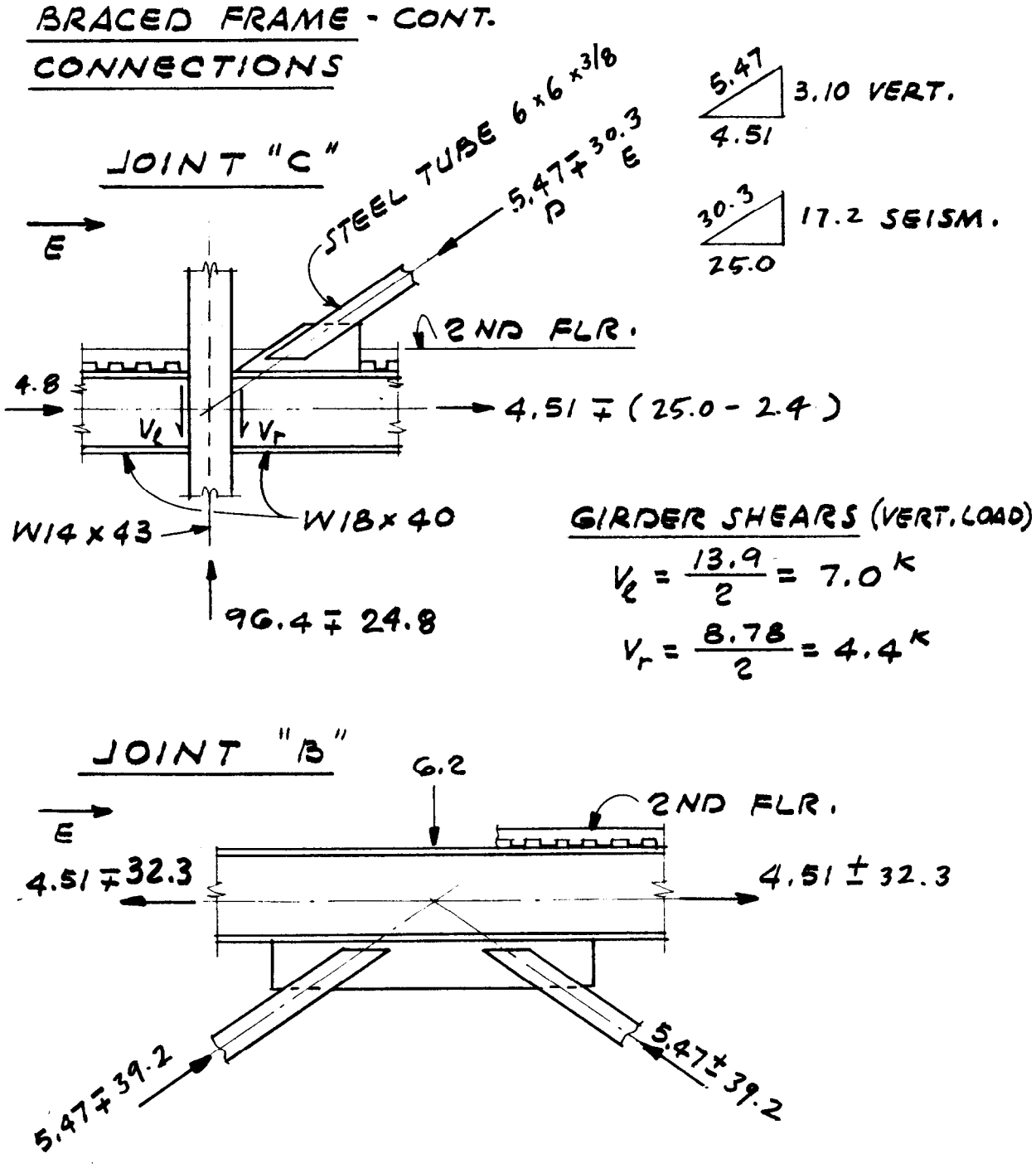

Figure D–3. Continued.

BRACED FRAME - CONT.

CONNECTIONS - CONT.

connections shall be designed for the least of:

(1) TENSILE STRENGTH OF THE BRACING

(2) $3\left(\frac{R_W}{8}\right)$ TIMES THE FORCE IN THE BRACE DUE TO PRESCRIBED SEISMIC FORCES.

(3) THE MAX. FORCE WHICH CAN BE TRANSFERRED TO THE BRACE BY THE SYSTEM.

BOTTOM LEVEL

TENSILE STRENGTH OF BRACE

$P_{ST} = F_y A = 46\,(8.08) = 372^k$

3/8 R_W X SEISMIC $\longrightarrow \frac{3}{8}(8)(39.2) = \underline{117.6^k} \longleftarrow$ GOVERNS

$117.6 + 5.47 = \underline{\underline{123.1^k}}$

(p. 29)

ANCHORAGE TO FOUNDATION

THIS IS A BRACED FRAME CONNECTION. AS SUCH, IT MUST MEET SEAOC 4G2, OR, IF CONSIDERED AS A COLUMN, SEAOC 4D2. THE RESULT IS THE SAME. SEE NEXT PAGE.

Figure D-3. Continued.

BRACED FRAME - CONT.

JOINT "a"

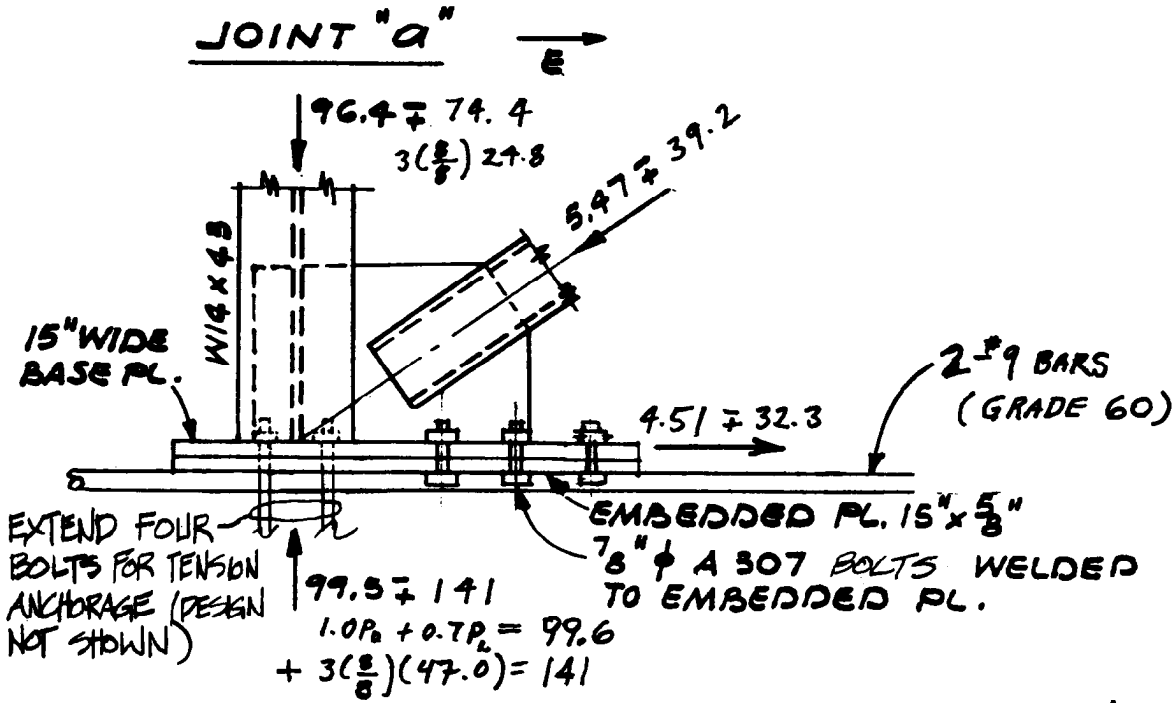

VERT. BEARING ON CONC. $P = 99.6 + 141 = 241^K$

FOR FOUNDATION MUCH WIDER THAN THE LOADED AREA, ULTIMATE BEARING STRESS:

$\sqrt{A_2/A_1}\ \phi\,(0.85 f_c')A_1 = 2(0.70)(0.85)(3)(A_1) = 3.57A_1$

REQ'D $A = \dfrac{241}{3.57} = 67.5\ IN^2$ $\quad [(\sqrt{A_2/A_1})_{MAX} = 2]$

MIN. LENGTH $= \dfrac{67.5}{15} = 4.5''$

SHEAR BOLTS $V = 4.61 + 3(\frac{5}{8})32.3 = 101^K$

USE $10 - \frac{7}{8}''\phi$ A 307 STUDS IN S.S.

STRENGTH: $10 \times 1.7 \times 6.01 = 102^K$

REINFORCING BARS

REQ'D $A = 101^K / 0.9(60) = 1.87\ IN^2$ 2-#9

LOCATE BASE PLATES IN A POCKET SO THAT THE #9'S ARE CONFINED WITHIN THE GRADE BEAM BAR CAGE. EXTEND BARS 4'-0 EA. SIDE OF POCKET. WELD TO DEVELOP THE BARS.

COMPLY WITH ACI 12.14.3.

Figure D-3. Continued.

BRACED FRAME - CONT.

DEFLECTION

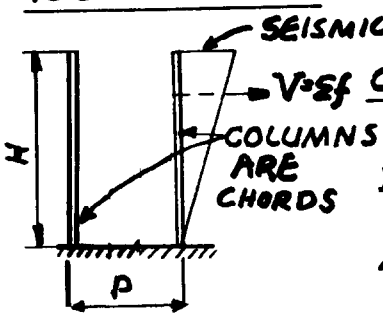

CHORDS: $\Delta_c = \dfrac{11\,VH^3}{60\,EI}$ (BEAM WITH INVERSE TRIANGULAR LOADING)

$$I = 2 \cdot A \cdot \left(\frac{D}{2}\right)^2 = \frac{AD^2}{2}$$

A = AREA OF ONE COLUMN

$$\Delta_c = \frac{11\,VH^3}{60E\,\frac{AD^2}{2}} = \frac{11\,VH^3}{30\,EAD^2}$$

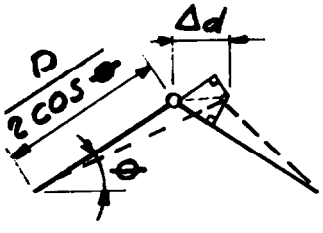

DIAGONALS: $\Delta d = \dfrac{P\,\frac{D}{2\cos\theta}}{EA\cos\theta} = \dfrac{f_d\,D}{2E\cos^2\theta}$

WHERE f_d IS THE STRESS IN THE DIAG.

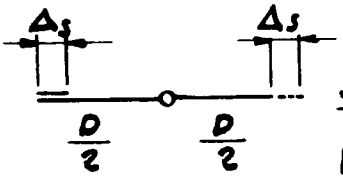

STRUTS: $\Delta_s = \dfrac{P \times \frac{D}{2}}{EA} = \dfrac{f_s\,D}{2E}$

WHERE f_s IS THE STRESS IN THE STRUT

$$\Delta = \Delta_c + \Delta_d + \Delta_s$$
$$= \frac{11\,VH^3}{30\,EAD^2} + \Sigma\,\frac{f_d\,D}{2E\cos^2\theta} + \Sigma\,\frac{f_s\,D}{2E}$$

IN COMPUTATION OF DEFLECTIONS USE STRESSES BASED ON SEISMIC FORCES, PAGE 28.

V FROM SHEET 30 ($2 \times 32.3 = 64.6^k$) $D = 32'$

MEMBER FORCES P FROM SHEET 30 $E = 29{,}000$ KSI

A = AREA OF MEMBER $\cos\theta = \dfrac{16}{[11^2+16^2]^{1/2}} = .824$

Figure B-3. Continued.

BRACED FRAME - CONT.
DEFLECTION - CONT.

CHORDS W14 x 43 $A = 12.6\ IN^2$ Δ_c

$$\Delta_c\ (ROOF) = \frac{11}{30}\frac{VH}{EA}\left(\frac{H}{D}\right)^2 = \frac{11}{30}\frac{64.6 \times (33 \times 12)}{29000 \times 12.6}\left(\frac{33}{32}\right)^2 = 0.027''$$

$$\Delta_c\ (3^{RD}) = .55\ \Delta_{ROOF}\ (AT\ 2/3\ H\ UNIFORM\ BEAM) \cong 0.015''$$

$$\Delta_c\ (2^{ND}) = .17\ \Delta_{ROOF}\ (AT\ 1/3\ H\ UNIFORM\ BEAM) \cong 0.005''$$

DIAGONALS 6x6x3/8 TUBE $A = 8.08\ IN^2$ Δ_d

	MEMBER P	$f_d = P/A$	$\frac{f_d D}{2E\cos^2\theta}$	
ROOF	13.4	1.66	0.0162	0.100"
3RD	30.3	3.75	0.0366	0.084"
2ND	39.2	4.85	0.0473	0.047"
1ST				0

STRUTS

		P	A	f_s	$\frac{f_s D}{2E}$	Δ_s
ROOF	W14x30	11.0k	8.85 in²	1.24 ksi	0.0082	0.040"
3RD	W18x40	25.0k	11.8 in²	2.14 ksi	0.014	0.032"
2ND	W18x40	32.3k	11.8 in²	2.74 ksi	0.0181	0.018"

TOTAL DEFLECTION

	Δ_c	Δ_d	Δ_s	Δ
ROOF	0.027	0.100	0.040	0.17"
3RD	0.015	0.084	0.032	0.13"
2ND	0.005	0.047	0.018	0.07"

EST. STIFFNESS OF WALL (A) & (C)

$$K_A = \frac{2\ BRACED\ FRAMES/WALL}{\Delta_R} = \frac{2 \times 64.6}{0.17''/12''/ft} = 9120\ K/FT$$

Figure D-3. Continued

FINAL PROPERTIES

TRANSVERSE PERIOD - SEAOC FORMULA 1-5
FOR STIFFNESS USE THE F, Δ VALUES FROM THE ANALYSIS FOR FRAME A (P. 19). FOR MASS USE THE STORY WEIGHTS (P. 10)

LEVEL	W	F	Δ	$W\Delta^2$	$F\Delta$
R	375^K	25.0^K	0.1052 FT.	4.15	2.63
3	707	20.3	0.0657	3.05	1.33
2	707	10.4	0.0282	0.56	0.29
				7.76	4.25

FOR THE WHOLE BUILDING (W'S ABOVE) THERE ARE THREE FRAMES; SO USE $3 \times F\Delta = 12.75$

$$T = 2\pi\sqrt{\frac{W\Delta^2}{gF\Delta}} = \sqrt{\frac{7.76\ K\text{-}FT.^2}{32.2\ FT/SEC^2 \times 12.75\ K\text{-}FT}}$$

$= 0.86$ SEC. (BARE FRAME)

STIFFNESS (SEE P. 11 & 12)

IN FINAL DESIGN, $K_1 = 529^K/FT$ (P. 19), REL. $K_1 = 1$
$K_A = 9120^K/FT$ (P. 38), REL. $K_A = \frac{9120}{529} = 17.2$

FOR FRAME A OR C,
$Kd = 17.2 \times 24 = 414$, $Kd^2 = 9930$ $\Sigma Kd^2 = 39,720$

TORSIONAL SHEAR $= \frac{414}{39,720} \times 2.4\ F_L = 0.02\ F_L$

DESIGN BASED ON $0.02\ F_L$ IS STILL O.K. (p. 12)

Figure D-3. Continued.

LONGITUDINAL DIRECTION: ECCENTRIC BRACED FRAMES

This section of the example illustrates the use of eccentric braced frames as an alternate to the concentric braced frames used in the previous section of the example. It should be noted that EBF's would not be an economical choice for this building because the seismic demands are relatively low. The EBF scheme is not to be compared with the CBF scheme for costs for this building: the EBF scheme is presented here only to illustrate the design procedure.

AISC formulas are from Chapter N of the ASD Manual, 9th edition.

DESIGN PROCEDURE

Example Page #

A. LATERAL FORCES

l. Base shear 41
2. Story forces and shear 41
3. Horizontal distribution of lateral forces 41

B. TYPICAL BEAM SIZING

l. Typical roof beam 42
2. Typical floor beam . . . . . , . 42

C. PRELIMINARY FRAME MEMBER SIZING

1. Beams 43–44
2. Braces 45
3. Columns 45

D. BRACED FRAME ANALYSIS 46

E. FINAL MEMBER SIZING

l. Roof beam 47-48
2. Floor beams 49–50
3. Braces 51–52
4. columns 53

Figure LA-3. Continued.

FINAL PROPER TIE'S

TRANSVERSE PERIOD - SEAOC FORMULA 1-5
FOR STIFFNESS USE THE F, Δ VALUES FROM THE ANALYSIS FOR FRAME A (P. 19). FOR MASS USE THE STORY WEIGHTS (P. 10)

LEVEL	W	F	Δ	$W\Delta^2$	FΔ
R	375^K	25.0^K	0.1052 FT.	4.15	2.63
3	707	20.3	0.0657	3.05	1.33
2	707	10.4	0.0282	0.56	0.29
				7.76	4.25

FOR THE WHOLE BUILDING (W'S ABOVE) THERE ARE THREE FRAMES; SO USE 3 × FΔ = 12.75

$$T = 2\pi\sqrt{\frac{W\Delta^2}{gF\Delta}} = \sqrt{\frac{7.76\ K\text{-}FT.^2}{32.2\ FT/SEC^2 \times 12.75\ K\text{-}FT}}$$

= 0.86 SEC. (BARE FRAME)

STIFFNESS (SEE P. 11 & 12)

IN FINAL DESIGN, $K_1 = 529^{K}/_{FT}$ (P. 19), REL. $K_1 = 1$
$K_A = 9120^{K}/_{FT}$ (P. 38), REL. $K_A = \frac{9120}{529} = 17.2$

FOR FRAME A OR C,
$Kd = 17.2 \times 24 = 414$, $Kd^2 = 9930$ $\Sigma Kd^2 = 39,720$

TORSIONAL SHEAR $= \frac{414}{39,720} \times 2.4\ F_L = 0.02\ F_L$

DESIGN BASED ON $0.02\ F_L$ IS STILL O.K. (p. 12)

Figure D-3. Continued.

LONGITUDINAL DIRECTION: ECCENTRIC BRACED FRAMES

This section of the example illustrates the use of eccentric braced frames as an alternate to the concentric braced frames used in the previous section of the example. It should be noted that EBF's would not be an economical choice for this building because the seismic demands are relatively low. The EBF scheme is not to be compared with the CBF scheme for costs for this building: the EBF scheme is presented here only to illustrate the design procedure.

AISC formulas are from Chapter N of the ASD Manual, 9th edition.

DESIGN PROCEDURE

Example Page #

A. LATERAL FORCES

1. Base shear 41
2. Story forces and shear 41
3. Horizontal distribution of lateral forces 41

B. TYPICAL BEAM SIZING

l. Typical roof beam 42
2. Typical floor beam 42

C. PRELIMINARY FRAME MEMBER SIZING

I.Beams 43-44
2. Braces 45
3. columns 45

D. BRACED FRAME ANALYSIS 46

E. FINAL MEMBER SIZING

l. Roof beam 47-48
2. Floor beams 49-50
3. Braces 51-52
4. columns 53

Figure D-3. Continued.

A. LATERAL FORCES

1. Base shear

$V = (ZIC/R_w)W$

$Z = 0.4$, $I = 1.0$, $R_w = 10$, $s = 1.5$, $C_t = 0.03$, $h_n = 34$ ft.

$T = C_t(h_n)^{3/4} = 0.03 \times (34)^{3/4} = 0.422$ sec.

$T < 0.70$ see, therefore $F_t = 0$.

$C = (1.25\ S) / T^{2/3} = (1{,}25 \times 1.5) / (0.422)^{2/3} = 3.33$

$C > 2.75$, therefore use $C = 2.75$

$C/R_w = 2.75/10 = 0.275 > 0.075$

$W = 1789$ kips

$V = (0.4 \times 1.0 \times 2.75 / 10)\ W = 0.11\ W = 0.11 \times 1789$
$= 197$ kips.

2. Story forces and shears

Level	w_j	h_j	$w_j h_j$	$wh/\Sigma wh$	F_j	V
R	375	34	12,750	.353	70	
						70
3	707	22	15,554	.431	85	
						155
2	707	11	7,777	.216	42	
						197
	1789		36,081			

3. Horizontal distribution of lateral forces

At the flexible roof diaphragm, the four braced frames each take 0.25 times the story force because of equal tributary areas; at the rigid floor diaphragms, the frames each take 0.30 times the story force because of equal stiffness and consideration of accidental torsion.

Figure D-3. Continued.

B. TYPICAL BEAM SIZING

1. Typical Roof Beam

W12X 19 $d = 12.2''$ $S = 21.3\ in^3$
$t_w = 0.235''$ $I = 1.30\ in^4$
$Z = 24.7\ in^3$

$l = 32$ ft.

$W = 6' \times (26\ DL + 20\ LL\ psf)$, or 0.276 k/ft.

$M = wl^2/8 = 35.3$ k-ft.

$f_b = M/S = 19.9$ ksi

$\Delta_{LL} = (20/46)\ 5wl^4/384EI = 0.75$ in. = 1/510 OK

$V_P < 0.55F_Y dt_w = 56.8$ kips ASD formula N5-1

2. Typical Floor Beam

W16X36 $d = 15.9''$ $S = 56.5\ in^3$
$t_w = .295''$ $I = 488\ in^4$
$Z = 64\ in^3$

$l = 32$ ft.

$w = 6' \times (75 + 50)$, or 0.750 k/ft.

$M = wl^2/8 = 96$ k-ft.

$f_b = M/S = 20.4$ ksi

$\Delta_{LL} = (50/125)\ 5wl^4/384EI = .54$ in. = 1/711 OK

$V_p < 0.55F_Y dt_w = 92.9$ kips

Figure D-3. Continued.

C. PRELIMINARY FRAME MEMBER SIZING

1. Frame loads

Load factor is 1.3 (ASD Sect. Nl

Distribution factors are 0.25 (roof) and 0.30 (floors)

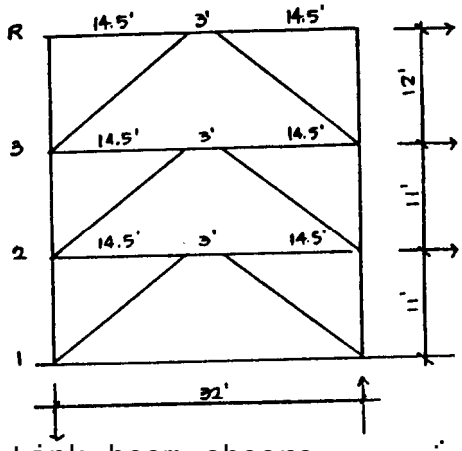

1.3 (0.25 X 70) = 22.8 kips

1.3 (0.30 X 85) = 33.2 kips

1.3 (0.30 X 42) = 16.4 kips

Link beam shears associated with this factored frame loading:

$(V_p)_R$ = (22.8k x12′) / 32′ = 8.55k
$(V_p)_3$ = (56.0k x 11′) / 32′ = 19.3k
$(V_p)_2$ = (72.4k x 11′) / 32′ = 24.9k

2. Beam sizes

Size is governed by link-beam strength with a link-beam rotation limit. This example chooses the criterion of 0.06 radians for a clear length of 1.6 M_s/V_s or less, with $M_s = ZF_Y$ and $V_s = 0.55F_Y dt_w$ (SEAOC 4H2a and 4H3a).

W12X26 at Roof:

M_s = 112 k′ (obtained as M_p in the ASD Plastic Design Selection Table)

V_s = 0.55 X 36 X 12.22 X 0.230 = 55.6 kips

Clear length must be < 1.6 x (M_s/V_s)= 3.2′ > 3.0

W16X36 at 3rd: (W16X36 also at 2nd)

Ms = 192 k'
Vs = 92.6 k

Clear length must be < 1.6 x (M_s/V_s) = 3.3′

Figure D-3. Continued

PRELIMINARY FRAME MEMBER SIZING - CONT.

Design braces and columns for forces associated with yield of the following link beams:

R: W12X26 V_s = 55.6 kips)

3: W16X31 V_s = 92.6 kips)

2: W16X31 V_s = 92.6 kips)

{Note: These beam sizes {are larger than required {for the low seismic forces {at this example. Beam {sizes were selected to {match typical framing {members.

Following are the lateral forces associated with yielding of the link beams:

12' x F_R / 32'= 55.6 kips

F_R = 148 kips

11′ x (F_R + F_3) / 32′ = 92.6 kips

F_3 = 121 kips

F_2 = 0

Assume forces enter braced bay equally from both sides.

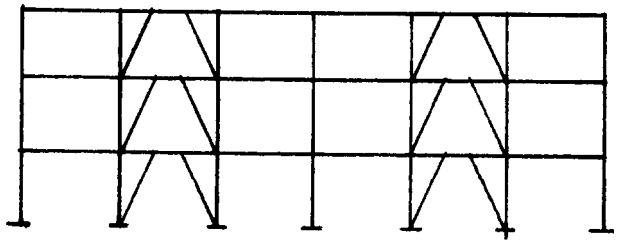

Figure D-3. Continued.

PRELIMINARY FRAME MEMBER SIZING – CONT.

3. Preliminary brace sizes

3rd story:

* brace length = 18.8′
* 1.5 is the load multiplier per SEAOC 4H12
* 148/2 is the horiz. component of the brace force
* 18.8'/14.5' is the geometric multiplier for the axial force

Brace design force = 1.5 X (148k/2 X 18.8/14.5) = 144 k
For use of the table in the AISC manual, the equivalent allowable axial force is

144k/1.7 = 85k

Use TS 7 x 7 x 1/4 P_{all} = 115 kips

2nd and 1st stories: brace length = 18.2'

F_{BR} = 1/1.7 x 1.5 x (270/2 kips x 18.2'/14.5') = 150 kips

Use TS 8 X 8 X 5/16 P_{all} = 186 kips

4. Preliminary column sizing

Size for first story; use that size above

1=11'; Trib. A = 32′ x 12′ = 384 sq. ft.

P_{D+L} = 384 (26 + 0 psf)
+ 2 X 384 X (75 + 40 psf)
+ 32′ X 34′ x 5.3 psf (for the wall)

= 104 kips

With a load multiplier of 1.25 per SEAOC 4H13,

P_E = 1.25 x [(148kips x 23′ + 122 x 11)/32']

= 185 kips

Σ = 289 kips; Equiv. allow. load = 289/1.7 = 170

Use W14X61 P_{all} = 322 kips

Figure D-3. Continued.

D. BRACED FRAME ANALYSIS

Computer input

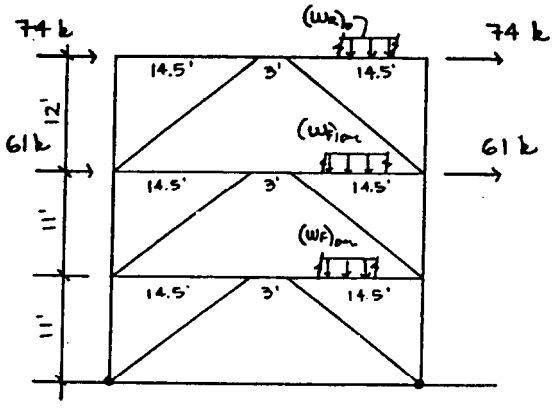

LOAD CASE I : DL + LL

$(W_R)_D$ = 3′(0.026ksf)
= 0.078 k/ft

$(W_F)_{D+L}$ = 3′ (0.075 +0.050)
+ 11′ (0′. 0053) wall
= 0.433 k/ft

LOAD CASE II : Seismic

(at link yield)

E = 29 x 10^3 ksi G = 11.6 x 10^3 ksi

Column bases are pinned; all other joints are rigidly connected.

Member Properties:

Member	Section	A in^2	A_v in^2	I in^4
Roof beams	W12x26	7.65	2.81	204
Floor beams	W16x36	10.6	4.69	448
Roof braces	TS 7x7xl/4	6.59	---	49.4
Floor braces	TS 8x8x5/16	9.36	---	90.9
columns	W14x61	17.9	---	640

Figure D-3. Continued.

E. FINAL MEMBER SIZING

1. Roof Beam

w12X26

$A = 7.65$ $t_f = 0.38$
$b_f = 6.5$ $d = 12.2$
$r_x = 5.17$ $t_w = 0.23$
$r_Y = 1.51$

a. Link beam stability:

$b_f/2t_f = 8.55 < 52/\sqrt{F_y} = 8.67$ (SEAOC 4H1)
$d/t_w = 53.0 < 540/\sqrt{F_y} = 107$ (ASD B5 . 1)

b. Link beam strength:

Assumed design forces at the link:

$V_E = v_s = 56$ k $V_D = 0$
$M_E = 1.5' x V_s = 84$ k ' $M_D = 0$
$P_E = 0$ $P_D = 0$

$V_s = 55.6$ k
$M_s = 112$ k'

Using beam flanges only, since link beam strength is governed by shear,

$M_s^* = t_f b_f F_Y (d - t_f/12 = 87.6$ k' > 84 OK

c. Beam strength (check as columns per ASD N4).

Assumed design forces outside of link:

v_E: OK by inspection with link
$M_E = 69.4$ k'*
$P_E = 74$ k (bm.axial @ link yield – see comp.out.)
$(M_D)_u = 1.3 \times 0.9^* = 1.2$ k' $M_u = 69.4 + 1.2 = 70.6$
$(P_D)_u = 1.3 \times 0.4 = 0.5$ k $P_u = 74 + 0.5 = 74.5$

Unbraced lengths:

$l_x = 14.5'$ $(kl/r)_x = 33.7$
$l_Y = 7.3'$ (brace @ midspan) $(kl/r)_Y = 58$

$F_a = 17.6$ ksi

$(F_e')_x = 129$ ksi

* from computer analysis

Figures D-3. Continued.

FINAL MEMBER SIZING - cont. Roof Beam - cont.

C. Beam strength - cont.

$P_{CR} = 1.7AF_a$ = 229 k (ASD formula N4-1)
$P_e = 23/12\ A(F_e')_x$ = 1891 k (See N4-1)
$P_y = AF_y$ = 275 k

$$M_m = \left[1.07 - \frac{(l/r_y)\sqrt{F_y}}{3160}\right] M_s = 108\ k' \leq M_s \quad \text{(ASD N4-5)}$$

Formula N4-2: $P_u/P_{CR} + C_m M_u/(1-P_u/P_e)M_m < 1.0$

74.5/229 + (0.85 x70.6)/[(1-(74/1891)) X 108]

= 0.33 + 0.58 = 0.91 OK

Formula N4-3: $P_u/P_Y + M_u/(1.18\ M_P) < l.0$; $M_u < M_s$

74.5/275 + 70.6/(1.18xl12)

= 0.27 + 0.53 = 0.80 OK

and 70.6 < 112 OK

d. Link beam rotation:

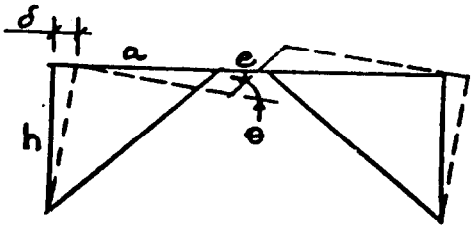

θ at $3(R_w/8) \times \delta_{code} \leq 0.06$ rad.

$\delta_{code} = [(0.25 \times 70)/148] \times 0.383"^*$
$= 0.0453"$

$3(R_w/8) \times \delta_{code} = 3.75\ \delta_{code} = 0.170"$

$\theta = (1 + 2a/e)(0.170)/h$
$= 0.013$ radians < 0.060 rad.

e. Link beam web:

$V_{code} < 0.8\ V_s$ (SEAOC 4H4)

$0.8\ V_s = 44.5$ k

$V_{code} = (0.25x70) \times 12 / 32$
$= 6.56$ k OK

Figure D-3. Continued.

E. FINAL MEMBER SIZING – cont.

2. Floor Beam

W16x36

$A = 10.6$ $t_f = 0.43$
$b_f = 7$ $d = 15.9$
$r_x = 6.51$ $t_w = 0.295$
$r_Y = 1.51$

a. Link beam stability:

$b_f/2t_f = 8.14 < 52/\sqrt{F_y} = 8.67$
$d/t_w = 53.9 < 640/\sqrt{F_y} = 107$

b. Link beam strength:

Assumed design forces at the link:

$V_E = V_S = 92.9$ k $V_{D+L} = 0$
$M_E = 1.5' \times V_S = 139$ k' $M_{D+L} = 0$
$P_E = 0$ $P_{D+L} = 0$

$V_S = 92.9$ k
$M_S = 192$ k'
$M^*_S = t_f b_f F_y (d - t_f/12 = 140 > 139$ OK

c. Beam strength

Assumed design forces outside of link:

V_E: OK by inspection with link
$M_E = 117$ k'*
$P_E = 135$ k
$(M_{D+L})_u = 1.3 \times 6^* = 7.8$ k' Mu = 117 + 7.8 = 125
$(P_{D+L})_u = 1.3 \times 5^* = 6.5$ k P″ = 135 + 6.5 = 141

Unbraced lengths:

$l_x = 14.5'$ $(kl/r)_x = 26.7$
$l_y = 7.3'$ (brace @ midspan) $(kl/r)_Y = 57.6$

$F_a = 17.6$ ksi

$(F_e)_x = 205$ ksi

* from computer analysis

Figure D-3. Continued.

FINAL MEMBER SIZING - cont. Floor Beam - cont.

c. Beam strength - cont.

$P_{CR} = 1.7AF_a$ = 317 k

$P_e = 23/12\ A(F_e')_x$ = 4165 k

$P_y = A\ F_y$ = 382 k

$$M_m = \left[1.07 - \frac{(l/r_y)\sqrt{F_y}}{3160}\right] MS = 184\ k' < M_s$$

$P_u/P_{CR} + C_m M_u(1-P_u/P_e)M_m < 1.0$

$= 0.45 + 0.59 = 1.04$ Say OK

$P_u/P_Y + M_u/(1.18\ M_s) < 1.0;\quad M_u < M_s$

$= 0.37 + 0.55 = 0.92$ OK

and 70.6 < 112 OK

d. Link beam rotation at 3rd Floor:

Θ at $3(R_w/8) \times \delta_{code} < 0.06$ rad.

$\delta_{code} = [(0.25x70)+(0.30x85)]/(148+122) \times 0.375"*$

$= 0.0597"$

$3(R_w/8) \times \delta_{code} = 3.75\ \delta_{code} = 0.224''$

$\Theta = (1 + 2a/e)\ (0.224)/h$
$= 0.018$ radians < 0.060 rad.

e. Link beam web:

$V_{code} < 0.8\ V_s$

$0.8\ V_s = 74.3$ k

$V_{code} = [(0.25x70 + 0.30x85 + 0.30x42) \times 11] / 32$
$= 19.1$ k OK

Figure D-3. Continued.

E. FINAL MEMBER SIZING - cont.

3. Brace size - 3-R $A = 7.59\ in^2$

$F_Y = 46$ ksi

TS 8x8xl/4 $b = d = 8$ in.

$t = 0.25$ in

$r_X = r_Y = 3.15$ in.

Assumed design forces:

$P_E = 1.5 \times 99^* = 149$ k

$M_E = 1.5 \times 15^* = 22.5$ k′

$(P_D)_u = 1.3 \times 1k^* = 1.3k$ $P_u = 149 + 1.3 = 150$

$(M_D)_u = 0$ $Mu = 22.5 + 0 = 22.5$

Unbraced lengths:

$lX = l_Y = 18.8'$ $(kl/r)_X = (kl/r)_Y = 72$

$F_a = 20.7$ ksi

$(F_e')_X = 28.8$ ksi

* from computer analysis

$P_{CR} = 1.7AF_a = 267$ k

$P_e = 23/12\ AF_e' = 419$ k'

$P_y = AF = 349$ k

$Z = bd^2/4 - b_1d_1^2/4 = 22.5\ in^3$

$M_S = ZF_Y = 86.4$ k′

$$M_m = [1.07 - \frac{(l/r_y)\sqrt{F_y}}{3160}]$$ $M_s = 79.1$ k′ < M_s

$P_u/P_{CR} + C_mM_u/(l-P_u/P_e)M_m < 1.0$

$= 0.56 + 0.27 = 0.83$ OK (Use $C_m = 0.6$)

$P_u/P_Y + M/(1.18\ M_s) < 1.0;$ $M < M_s$

$= 0.43 + 0.225 = 0.65$ OK

Width\thickness = $b_1/t = 30 \approx 190/\sqrt{F_y} = 28$ Say OK

Depth\thickness = $d/t = 32 \leq 257/\sqrt{F_y} = 38$ OK

Figure D-3. Continued

E. FINAL MEMBER SIZING - cont.

4. Brace size - 2-3 and 1 - 2

TS 8x8x3/8

$A = 11.1\ in^2$
$F_y = 46$ ksi
$b = d = 8$ in.
$t = 0.375$ in
$r_x = r_y = 3.09$ in.

Assumed design forces:

$P_E = 1.5 \times 171 = 257$ k
$M_E = 1.5 \times 22 = 33$ k′

$(P_{D+L})_u = 1.3 \times 6.0k^* = 8k$ $\quad P_u = 257 + 8 = 265$
$(M_{D+L})_u = 1.3 \times 0.6\ k^* = 1\ k'$ $\quad M_u = 33 + 1 = 34$

Unbraced lengths:

$l_x = l_y = 18.2'$ $\quad (kl/r)_x = (kl/r)_y = 71$

$F_a = 20.9$ ksi

$(F_e')_x = 29.6$ ksi

* from computer analysis

$P_{CR} = 1.7AF_a = 394$ k
$P_e = 23/12\ AF_e' = 630$ k′
$P = AF_y = 511$ k
$Z^y = bd^2/4 - b_1d_1^2/4 = 32.7\ in^3$
$M_s = ZF_y = 125$ k′

$$M_m = [1.07 - \frac{(l/r_y)\sqrt{F_y}}{3160}]\ M_s = 115\ k' \leq M_s$$

$P_u/P_{CR} + C_mM_u/(1-P_u/P_e)M_m < 1.0$

$= 0.67 + 0.31 = 0.98$ OK $\quad$ (Use $C_m = 0.6$)

$P_u/P_y + M/(1.18\ M_s) < 1.0;\ M < M_p$

$= 0.52 + 0.23 = 0.75$ OK

Width\thickness $= b_1/t = 19 \leq 190/\sqrt{F_y} = 28$ Say OK
Depth\thickness $= d/t = 21 \leq 257/\sqrt{F_y} = 38$ OK

Figure D-3. Continued.

E. FINAL MEMBER SIZING - cont.

5. Column size - 1-2

W14X53

$A = 15.6\ in^2$
$b_f = 8\ in.$ $d = 13.9\ in.$
$t_f = 0.37\ in.$ $t_c = 0.66\ in.$
$Z = 87.1\ in^3$
$r_x = 5.89\ in.$ $r_y = 1.92\ in.$

Assumed design forces:

$P_E = 1.25 \times 139 = 174\ k$
$M_E = 1.25 \times 15 = 18.8\ k'$

$(P_{D+L})_U = 1.3 \times 104\ k^* = 135K$ $P_u = 174 + 135 = 265$
$(M_{D+L})_U = 1.3 \times 3.7\ k^* = 4.8\ k'$ $Mu = 18.8 + 4.8 = 24$

Unbraced lengths:

$l_x = l_Y = 11'$ $(kl/r)_x = 22$
$(kl/r)_y = 69$

$F_a = 16.5\ ksi$

$(F_e')_x = 309\ ksi$

* from computer analysis

$P_{CR} = 1.7\ A\ F_a = 438\ k$
$P_e = 23/12\ AF_e' = 9240\ k'$
$P_y = AF_y = 562\ k$
$M_S = ZF_Y = 261\ k'$

$$M_m = [1.07 - \frac{(l/r_y)\sqrt{F_y}}{3160}]\ M_S = 245\ k' \leq M_S$$

$P_u/P_{CR} + C_m M_u/(1-P_u/P_e)M_m < 1.0$

$= 0.71 + 0.06 = 0.77$ OK (Use $C_m = 0.6$)

$P_u/P_Y + M/(1.18\ M_S) < 1.0;$ $M < M_P$

$= 0.55 + 0.08 = 0.63$ OK

Figure D-3. continued.

DESIGN EXAMPLE D-4

Dual Bracing System With Concrete Frame

Description of Structure. A two-story Office Building in Zone 4 with a complete reinforced concrete vertical load-carrying space frame. The lateral forces are resisted by a dual system consisting of concrete special moment resisting frames and concrete shear walls. The structural concept is illustrated on Sheet 2. The East-West direction is considered.

Construction Outline:

Roof:
Built-up, 5-ply.
Concrete joists and girders.
Suspended ceiling.

2nd & 3rd Floors:
Concrete joists and girders.
Asphalt tile.
Suspended ceiling.

1st Floor:
Concrete slab-on-grade.

Exterior Walls:
Bearing Walls in concrete and non-bearing non-shear insulated metal panels.

Partitions:
Non-structural removable drywall, except concrete as structurally required.

Design Concept: The structure is a dual system meeting SEAOC 1D6d, and it qualifies for an R_w-factor of 12 as follow: (1) the SMRF is designed to resist not less than 25 percent of the prescribed lateral forces; (2) the shear wall and the special frame systems are designed to resist the total prescribed lateral forces in proportion to their relative rigidities. In this example it is assumed that the rigidity of the frame system is negligible when compared to the wall system. (Compare stiffness as proportional to the third power of the width of one element 14^3 for a column is much less that 120^3 for a wall.) Therefore, the wall system is designed for 100 percent of the base shear and the frame system for 25%, The roofs and floors form rigid diaphragms, and the seismic loads to the frames are proportioned according to their stiffnesses and loads to the walls according to theirs. The building is assumed to be symmetrical about both axes so that only accidental torsion is involved.

Discussion. Vertical and lateral forces are pre-computed. (See Example A-5 for a typical computation.) The shear walls in the south wall (Line D) are designed for the given lateral forces. The seismic frames would be designed for 25% of these forces, using the methods of Example A-2. Deformation compatibility is investigated for the nonseismic frames.

Materials. Conc. $f_c' = 3{,}000$ psi; reinf. steel $f_Y = 60{,}000$ psi.

Figure D-4. Dual bracing system.

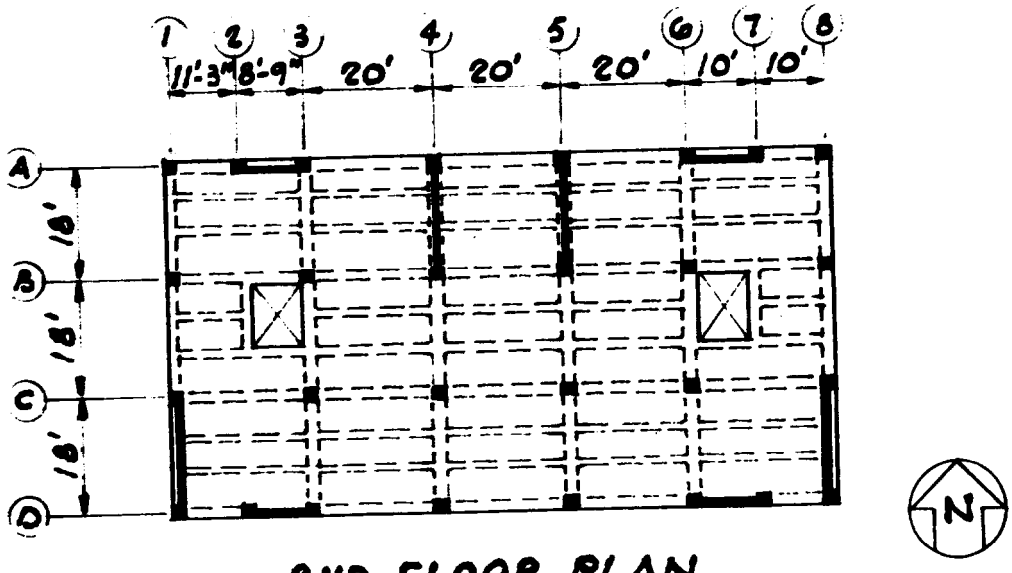

2ND FLOOR PLAN

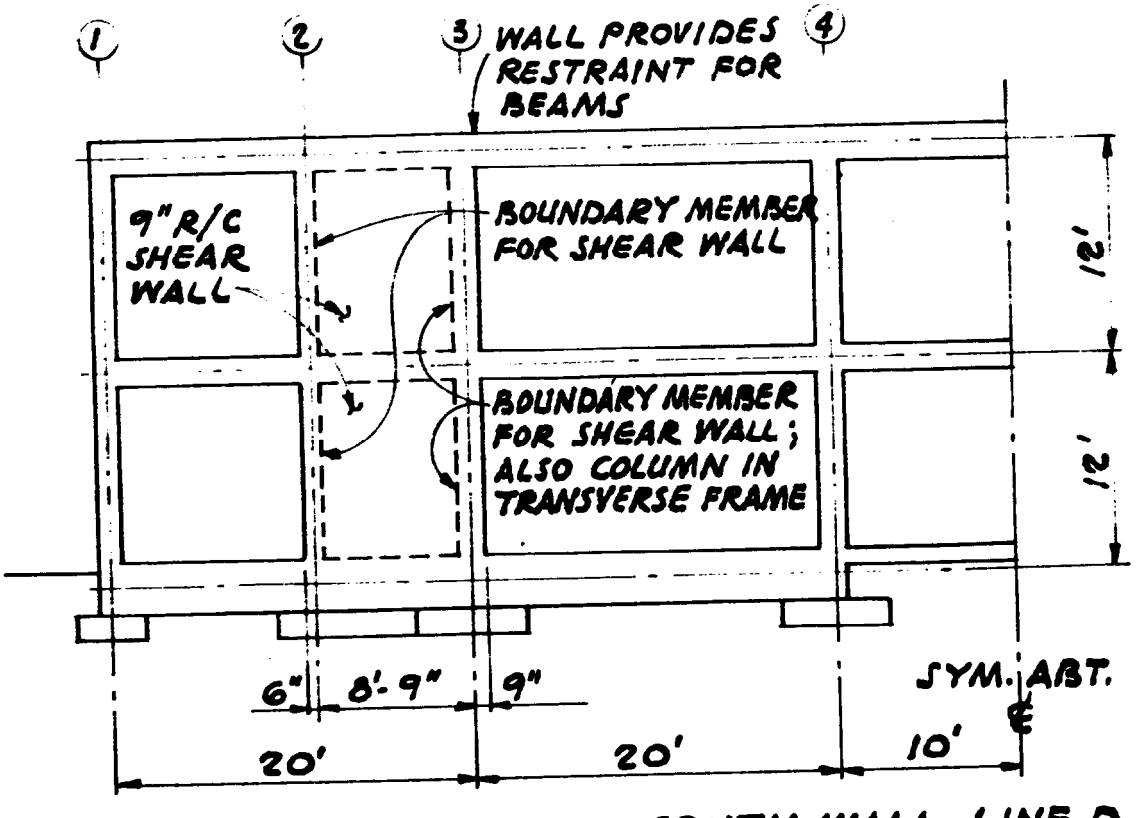

HALF ELEVATION OF SOUTH WALL-LINE D

Figure D–4. Continued.

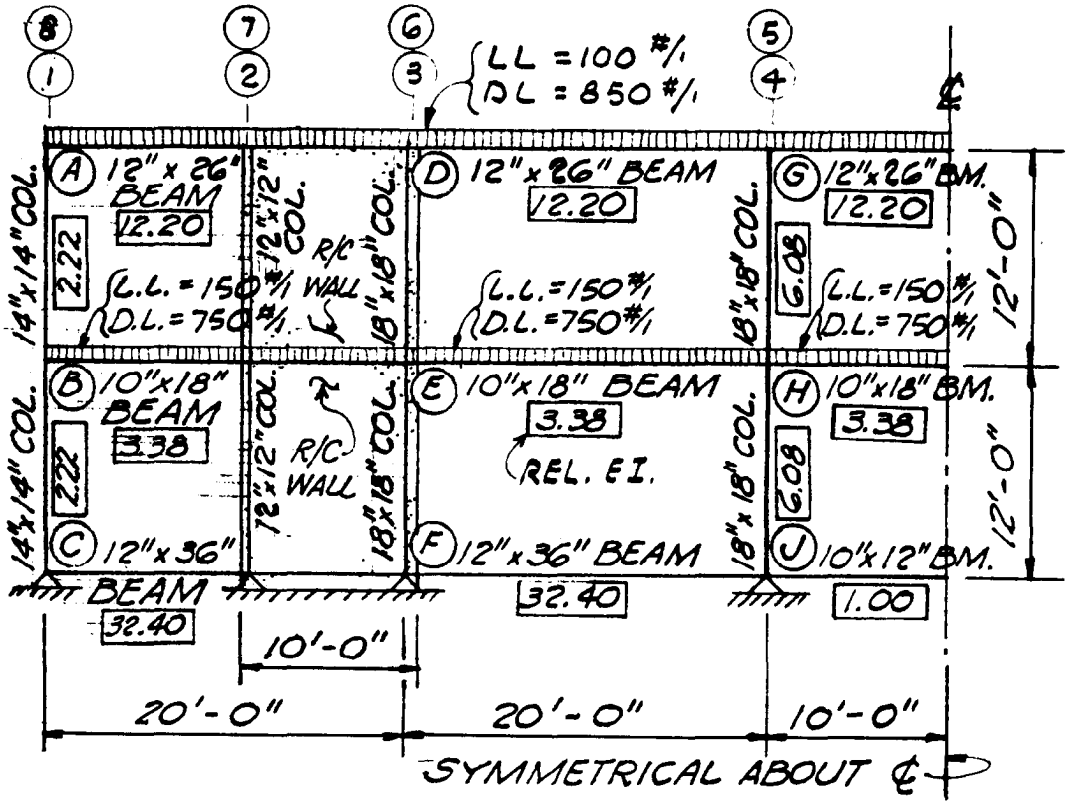

MEMBERS AND LOADS - SOUTH WALL - LINE D

FRAME PROVISIONS

The two interior frames (Lines B and C) will be designed as special moment resisting frames to carry 25% of the total required lateral force. See Example A-2. This example will deal only with Lines A and D which have shear walls that carry 100% of the lateral force. Deformation compatibility (SEAOC lH2d) must be investigated for the vertical load-carrying frames on Lines A and D (see p. 11).

As an alternate, the interior frames could be designed for vertical load only (with an investigation for deformation compatibility), and the lateral forces would be carried by ductile moment resisting space frames on Lines A and D. In these frames there is a choice concerning the columns on Lines 2 and **7**: the columns may be treated as columns with adjacent girders of 10′ span, or they may be treated as boundary members for the shear walls. In the latter case, the girders must still be designed, together with the columns, for the actual 10′ spans, but they must also be designed to span 20′ from 1 to **3** and from **6** to **8** in case the shear walls and boundary members fail.

Figure D-4. Continued.

SHEAR WALL ANALYSIS

SHEAR WALLS ARE DESIGNED FOR 100% OF THE TOTAL REQUIRED LATERAL FORCE. DESIGN FORCES FOR THE SOUTH WALL ARE SHOWN.

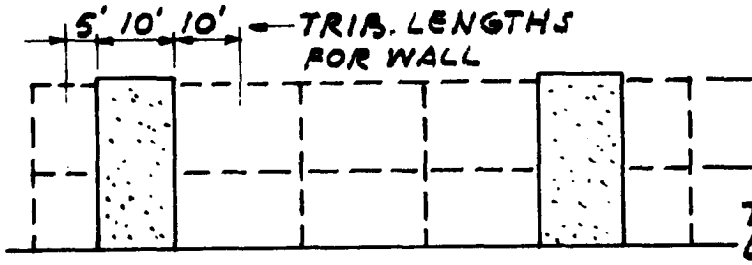

TOTAL LATERAL LOAD ASSIGNED TO SOUTH WALL. EACH SHEAR WALL TAKES HALF.

SOUTH WALL ELEVATION

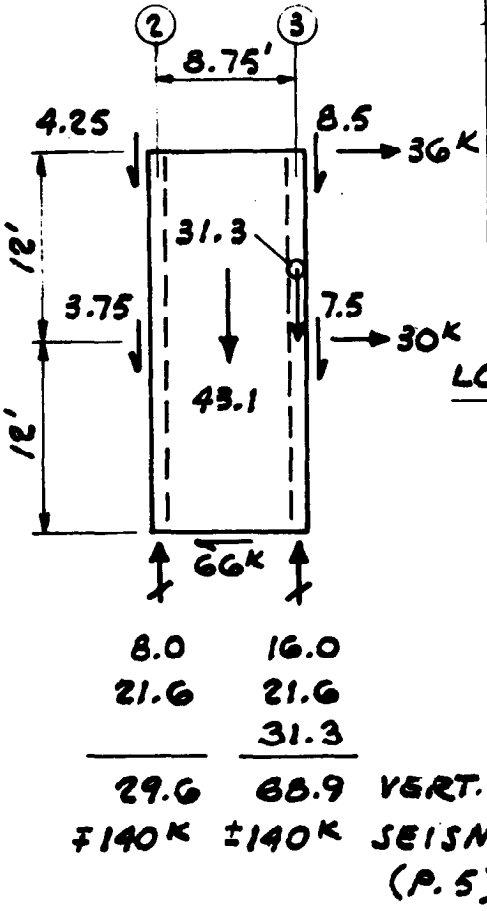

SOUTH WALL BEAM REACTIONS		
FLAT LOAD, EDGE BEAM & WALL	LEFT 5' TRIB.	RIGHT 10' TRIB.
ROOF:		
DL @ 0.85 K/'	4.25	8.5
LL @ 0.10	0.50	1.0
FLOOR:		
DL @ 0.75 K/'	3.75	7.5
LL @ 0.15	0.75	1.5

LOAD TRIBUTARY DIRECTLY TO WALL

ROOF 0.85×10 = 8.5
FLOOR 0.75×10 = 7.5
WALL 10×24×0.113 = 27.1
TOTAL DL 43.1K
FLOOR LL 0.15×10 = 1.5K

LINE (3) GIRDER REACTION.

ROOF + FLOOR DL = 31.3K
FLOOR LL = 6.0K
(FROM TRIB. AREA TO GIRDER (C-3) - (D-3)
CALCULATION NOT SHOWN)

Figure D-4. Continued

SHEAR WALL ANALYSIS - CONT'D

OVERTURNING

$$M_{OT} = (36^K \times 24') + (30 \times 12) = 1224^{K'}$$

$$F_{OT} = \pm \frac{1224}{8.75} = \pm 140^K$$

UPLIFT

CALCULATE MAX. NET UPLIFT USING

$P = 0.9D - 1.4E$

$= 0.9(29.6) - 1.4\ (140) = -169^K$

THIS COULD BE REDUCED BY INCLUDING FOUNDATION DEAD LOAD, OR BY WIDENING THE WALL (IF ARCHITECTURALLY ACCEPTABLE).

THE NET UPLIFT FORCES COULD BE TAKEN BY DRILLED PIERS OR ROCK ANCHORS IF APPROPRIATE.

MAX. COMPRESSION (LINE 3)

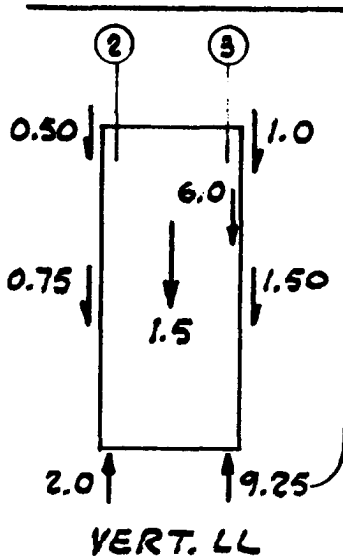

$P = 1.4\ (D + L + E)$

VERT. DL	68.9	P.4
VERT. LL	9.3	P.5
SEISMIC	140.0	P.4
	218.2	

$P = 1.4\ (218.2) = 305^K$

APPLY TO BOUNDARY MEMBER AND FOOTING ON LINE 3

Figure D-4. Continued.

SHEAR WALL DESIGN

WALL SHEAR $V_u = 1.4E_v$ $\phi = 0.60$

$V_u = 1.4\left(\frac{72+60}{2}\right) = 92.4$ $A_c = 9'' \times 10' \times 12''/_1 = 1080 \text{ IN}^2$

SHEAR CARRIED BY CONC.= $v_u = \frac{92{,}400}{0.60 \times 1080} = 143$ PSI

$v_c = 2\sqrt{f_c'} = 2\sqrt{3000} = 110$ PSI $< 8\sqrt{f_c'}$ OK

$V_c = 0.110 \times 1080 = 119^k$

SHEAR CARRIED BY REINF. $V_u' = \frac{V_u}{\phi} - V_c = \frac{132}{0.85} - 119 = 36.3^k$

$A_v = \frac{V_u' s}{f_{yd}}$ $s = \frac{A_v f_{yd}}{V_u'}$

Try #4 @ 18" CC EACH WAY EACH FACE

REQ'D $s = \frac{2(0.20)(60)(9.25 \times 12)}{36.3} = 73''$

$A_{s\,MIN.} = 0.0025bd = 0.0025 \times 9 \times 12 = 0.27 \text{ IN.}^2/\text{FT.}$

A_s PROVIDED $= \frac{12}{18} \times 2 \times 0.20 = 0.27$ OK

ALLOWABLE SHEARING STRESS $= 2\sqrt{f_c'} + \rho f_y$

$= 110 + (0.0025 \times 60{,}000) = 110 + 150 = 260 > 143$

REQ'D MIN. SPACING $= \frac{d}{3} = \frac{10'}{3}$ OR 18"

OR $3b = 27''$ ACI 11.10.9.5

SHEAR-FRICTION AT CONSTRUCTION JOINT AT BASE

$A_v = \frac{V_u}{\phi f_{yu}} = \frac{92.4}{0.6 \times 60 \times 0.60} = 4.28 \text{ IN.}^2$ ACI 11-7

$4.28 \div 10 = 0.43 \text{ IN}^2/\text{FT.} > 0.27 \text{ IN.}^2/\text{FT}$ N.G.

∴ PROVIDE INTERM. #4 DOWELS @ 18" O.C.

figure D-4. Continued

SHEAR WALL DESIGN - CONT'D

VERTICAL BOUNDARY ELEMENT AT LINE 2

Check the requirement for confined boundary elements. Consider, for example, Line 2 of shear wall 2-3 on Line D.

t=9", D= 10'
A = tD = 9/12 (10) = 7.5 sq. ft.
$S = tD^2/6 = 9/12\ (10)^2/6 = 12.5\ ft^3$
M=l.4x1224 k'=1714k'
$P = 1.4(D + L) = 1.4\ [\ (29.6 + 68.9) + (2.0 + 9.25)] = 154^k$
$f_M = M/S = 1714/12.5 = 137$ ksf
$f_R = P/A = 154/7.5 = 20.5$ ksf
$f = f_M + f_R =$ 157.5 ksf, or 1094 psi

A confined boundary element is required if $f < 0.2\ f_c'$

$0.2\ f_c' = 0.2\ (3{,}000$ psi) = 600 psi
f >600, therefore, a boundary element is required.

Design the boundary element per ACI 21.5.3, The need for confinement applies also to the boundary element on Line 3. Special confinement maybe discontinued when $f < (0.15\ f_c'$ = 450 psi).

Figure D-4. Continued.

SHEAR WALL DESIGN - CONT'D.

VERTICAL BOUNDARY MEMBER - LINE 2

VERTICAL LOADS: 12"x12" COL.

FOR MAX. TENSION,
REQ'D $P_u = 169^k$ (p. 5)

FOR MAX. COMPRESSION
REQ'D $P_u = 1.4(D+L) + 1.4E$
$= 1.4(29.6+2.0) + 1.4(140) = +240^k$

FOR TENSION ON COL. CORE:

$$\frac{P_u}{\phi} = \frac{169}{0.90} = 188^k$$

$$A_s = \frac{188}{60} = 3.13^{\square''}$$

FOR COMPRESSION:

$P_u = 240^k$ $\gamma = \frac{12-4.38}{12} = 0.635$

USE $\gamma = 0.60$

$$\left.\begin{aligned} \frac{P_u}{A_G} &= \frac{240}{12\times12} = 1.67 \\ \frac{e}{h} &= 0.10 \text{ MIN.} \end{aligned}\right\} \text{FROM ACI SP-17A CHART R3-60.60}$$

REQ'D $\rho_g = 0.010$
$A_s = 0.01(12\times12) = 1.44^{\square''} < 3.13$

TENSION CONTROLS:
PROVIDE 4-#8 ($3.16^{\square''}$)
VERTICAL COLUMN CORE REINFORCEMENT

Figure D-4. Continued.

SHEAR WALL DESIGN - CONT'D

VERTICAL BOUNDARY MEMBERS - CONT'D

SPECIAL TRANSVERSE REINFORCEMENT:

FOR #4 HOOPS : $h_{c1} = 12 - 3.0 = 9''$

$A_{SH} = .40\,\square''$ $\quad h_{c2} = 12 - 3.0 = 9''$

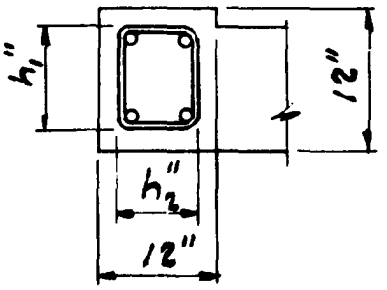

FROM ACI 21.4.4.1

$$s = \frac{A_{SH}}{0.30\, h_c \frac{f_c'}{f_{yh}}\left[\frac{A_g}{A_{ch}} - 1\right]}$$

$$= \frac{.40}{0.30(9.0)\frac{3}{60}\left[\frac{12 \times 12}{9 \times 9} - 1\right]} = 3.81''$$

OR $$s = \frac{A_{SH}}{0.09 h_c \frac{f_c'}{f_{yh}}} = \frac{.40}{0.09(9)\frac{3}{60}} = 9.88''$$

$S_{MAX} = 3.81''$ $\quad$ ∴ USE #4 HOOPS @ 3½" O.C. THRU-OUT LENGTH OF COL. CORE

Figure D-4. Continued.

SHEAR WALL DESIGN - CONT'D

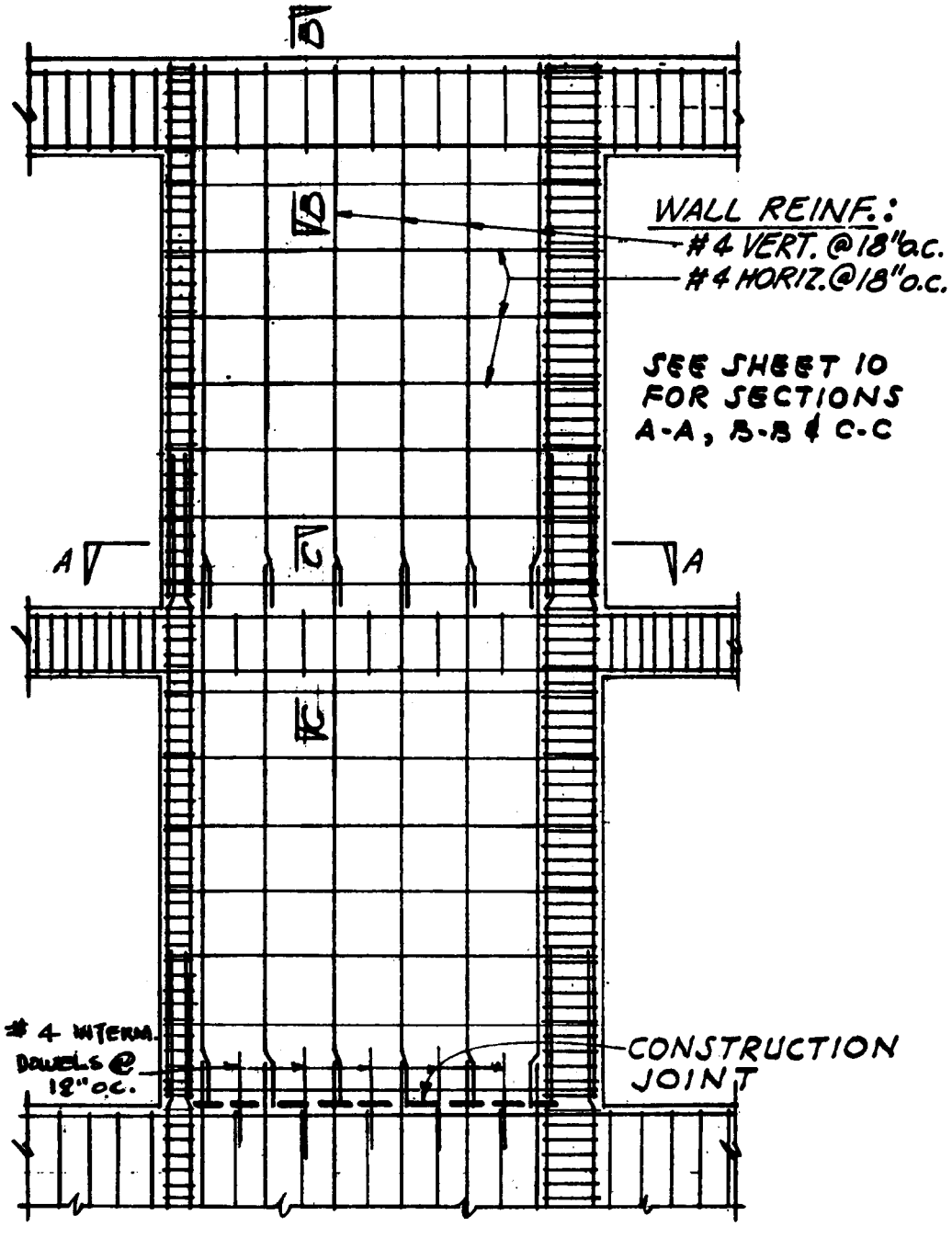

WALL ELEVATIONS

Figure D-4. Continued.

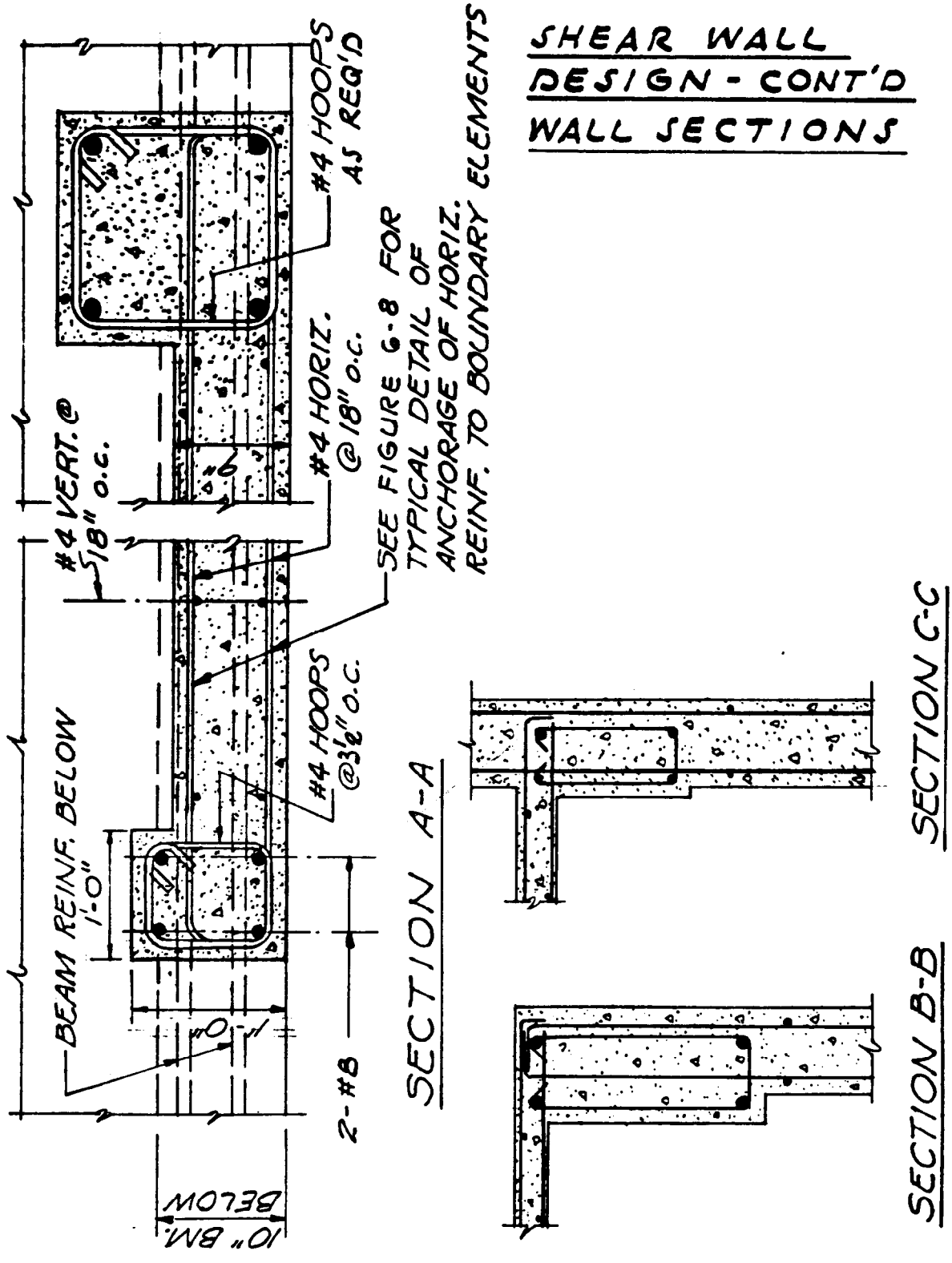

Figure D-4 Continued.

Deformation Compatibility, (3Rw/8) Times Deflection. In this example, the shear walls (with vertical boundary members) on Lines A and D and the frames on Lines B and C are designed to resist the seismic forces. The framing members on Line A and D (other than the shear wall vertical boundary members) are not part of the lateral force resisting system; therefore, they will be investigated for deformation compatibility (SEAOC lH2d). When the lateral forces shown on page 4 are applied to the structure, the lateral displacement is 0.071 inch at the roof and 0.027 inch at the floor level. The framing members on Lines A and D must be investigated for 3(12)/8 = 4.5. times these displacements. Refer to SEAOC Commentary, p. 42-C. Also, see Design Example D-7, p.9 and 10.

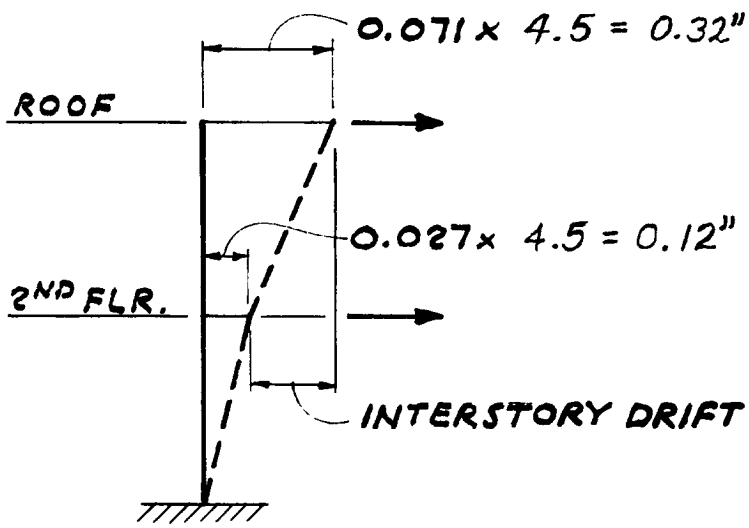

The resulting member forces are combined with the forces due to vertical gravity loads. In this example, the resulting stresses are within the strength of the members and the P-A effects are negligible. Therefore, the requirements for deformation compatibility are satisfied.

Figure D-4. Continued.

DESIGN EXAMPLE D-5

Dual Bracing System With Steel Frame

Description of Structure. A three-story Administration Building in Zone 4 with dual bracing system consisting of a special moment resisting frame in structural steel and concrete shear walls. The structural concept is illustrated on Sheets 2, 3, and 4.

Construction Outline

Roof:
- Built-up, 5-ply
- Metal decking with insulation board.
- Suspended ceiling.

2nd & 3rd Floors:
- Metal decking with concrete fill.
- Asphalt tile.
- Suspended ceiling.

1st Floor:
- Concrete slab–on–grade.

Exterior Walls:
- Bearing Walls in concrete and non-bearing, non-shear insulated metal panels.

Partitions:
- Non-structural removable drywall, except concrete as structurally required.

Design Concept. The building has a complete steel space frame capable of carrying all gravity loads. Lateral loads are resisted by a dual system. Concrete shear walls are designed to carry 100% of the prescribed lateral loads. (The transverse walls are on lines B, C, E and W; longitudinal walls are on N and S.) Steel moment frames are designed to carry their share of the lateral loads when acting together with the shear walls, and at least 25% of the prescribed lateral loads when acting alone. (The transverse frames are on Lines 2, 3, and 6; the longitudinal frames are on Lines A and C, with moment connections to the columns on Lines 1, 3, 5, and 7.) For this system, $R_w = 12$. At the roof, the metal deck system forms a flexible diaphragm and the lateral loads are distributed by tributary area; at the floor the concrete–filled metal deck system forms a rigid diaphragm and the loads are distributed by relative rigidities.

Discussion. Calculations are given for the amount of shear to each floor for 100% of the total base shear to the shear walls and 25% of the total base shear to the frames. The distribution of the base shear to the shear walls is not given here; it would follow the procedures of example A-1. The 25% requirement for the frames governs the design of the frames because they have negligible rigidity compared to the walls. The exterior concrete at the shear walls is exposed; the other portions of the exterior walls are covered with insulated steel sandwich panels.

Figure D-5. Dual bracing system.

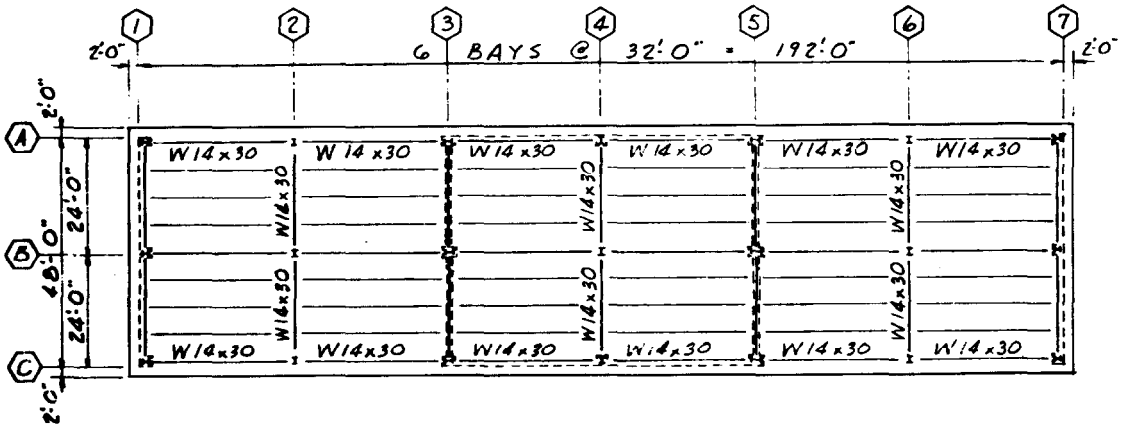

ROOF PLAN

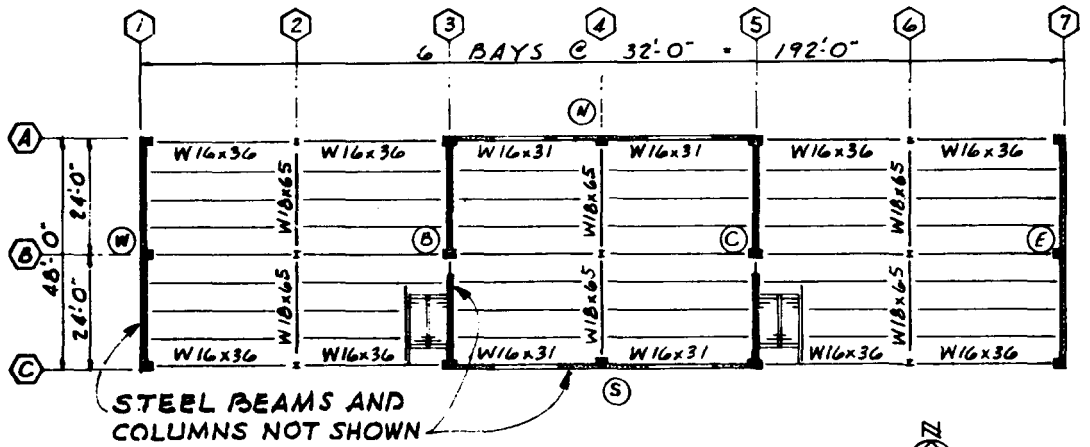

2ND & 3RD FLOOR PLAN

LOADS.

ROOF:

5 PLY ROOFING	6.0 #/□'
1" INSULATION	1.5
STEEL DECK	2.3
STEEL PURLINS	3.7
STEEL GIRDERS AND COLUMNS	1.2
CEILING	10.0
MISCELLANEOUS	1.0
DEAD LOAD	25.7
ADD FOR SEISMIC LOAD:	
PARTITIONS	10.0
TOTAL FOR SEISMIC =	35.7 #/□'

2ND & 3RD FLOORS:

FINISH	1.0 #/□'
STEEL DECK	3.1
CONCRETE FILL	32.0
STEEL BEAMS	5.9
STEEL GIRDERS AND COLUMNS	1.5
PARTITION	20.0
CEILING	10.0
MISCELLANEOUS	1.0
DEAD LOAD	74.5 #/□'
LIVE LOAD	50.0 #/□'

Figure D-5 Continued.

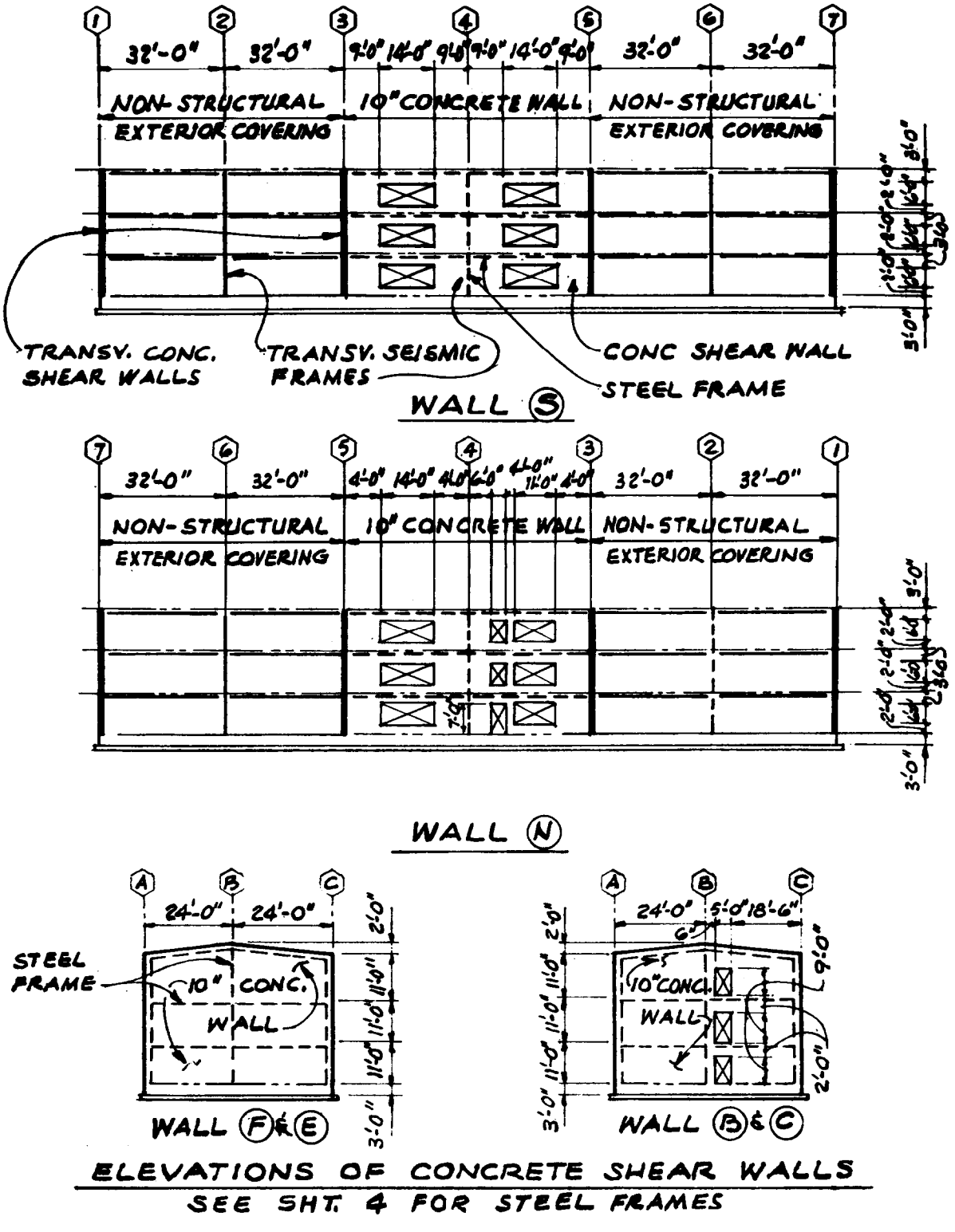

Figure D-5. Continued

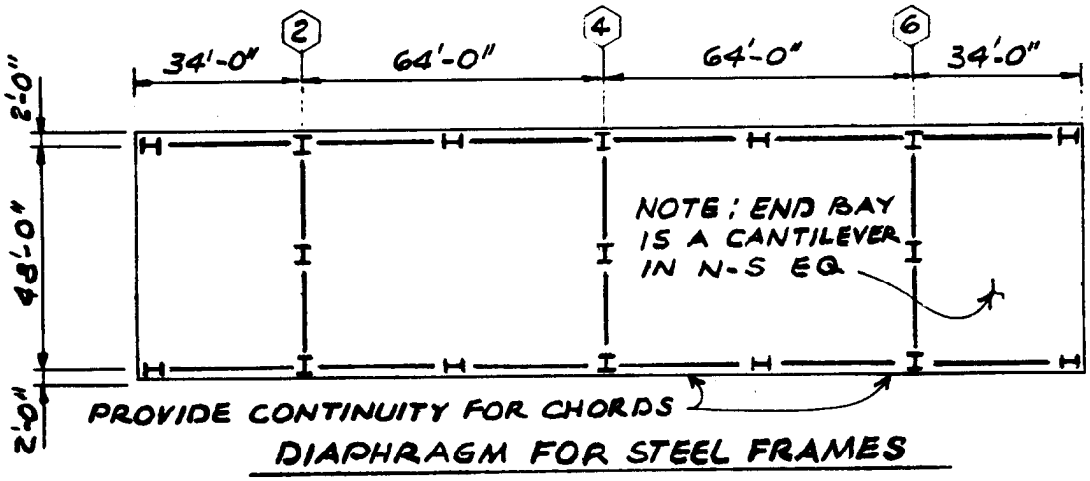

DIAPHRAGM FOR STEEL FRAMES

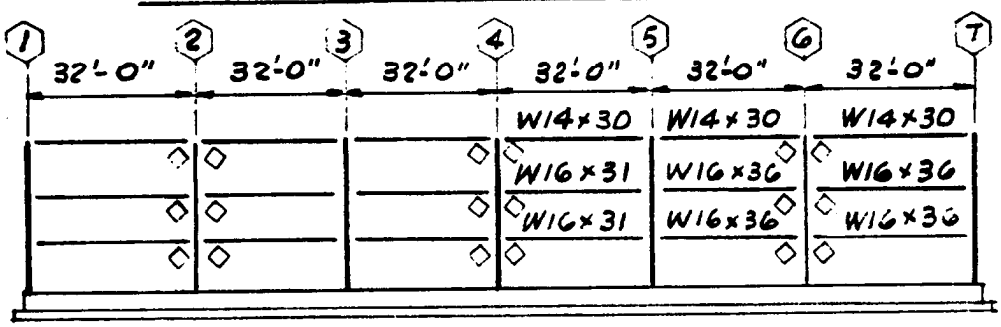

STEEL FRAMES AT (N) & (S) WALLS

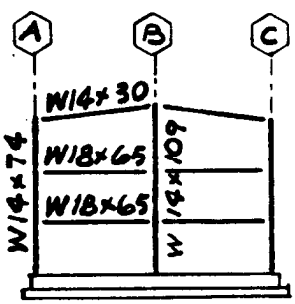

VERTICAL LOAD + SEISMIC

LINES 2, 4, 6.

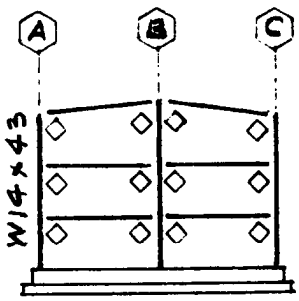

VERTICAL LOAD ONLY

LINES 1, 3, 5, 7.

TRANSVERSE STEEL FRAMES

◇ DENOTES FRAMING CONNECTION FOR SHEAR & CHORD FORCES; OTHER CONNECTIONS TO DEVELOP FLEXURAL CAPACITY FOR FRAME ACTION AS WELL AS SHEAR AND CHORD FORCES.

BEAMS IF EMBEDDED IN SHEAR WALLS SHALL BE DESIGNED TO CARRY THE WEIGHT OF CONCRETE IN THE STORY ABOVE.

Figure D-5. Continued

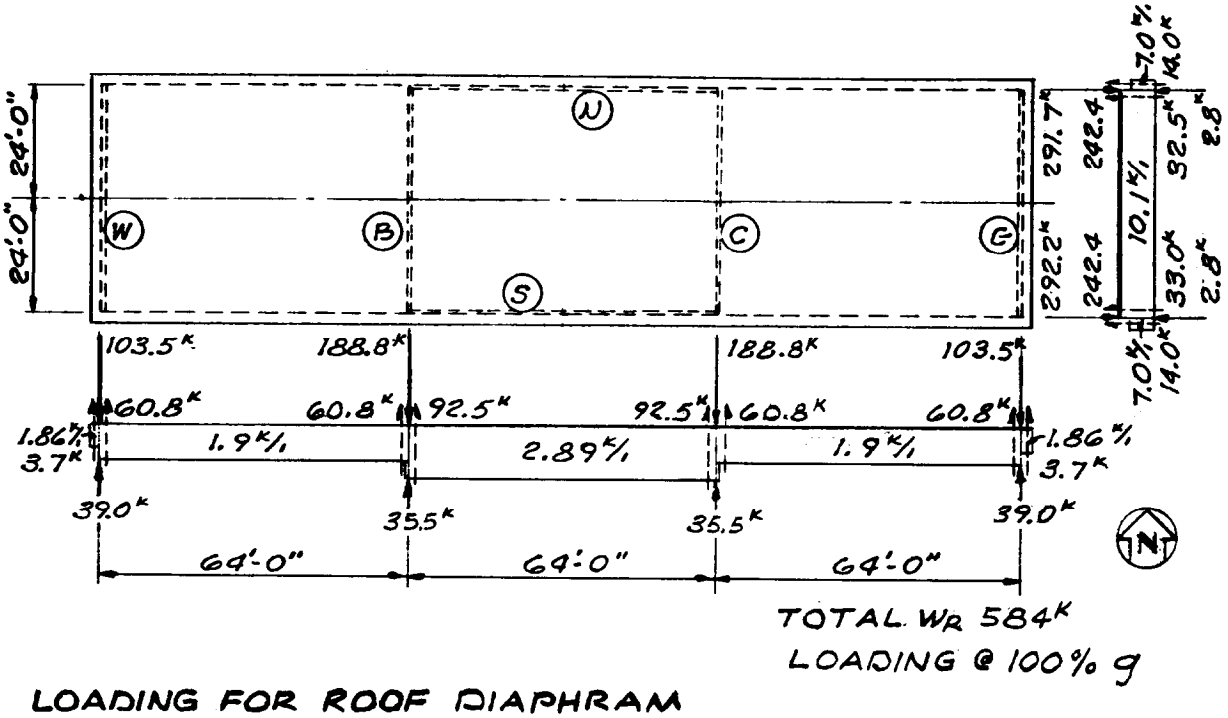

LOADING FOR ROOF DIAPHRAM

EXTERIOR WALLS (ACCOUNT FOR PERCENTAGE OF SOLID WALL - WINDOWS OUT)

METAL PANEL
WALL WT. 4 PSF × 5.5' = 22#/' × 62.8 = 1381.6# × 2 = 2,760#

10" CONC. WALLS { E & W WALLS: .833 × 6.5 × 150 = 813#/'
N & S WALLS: .833 × 5.5 × 150 = 687

(W) = 813 × 1.0 = 813 × 48 = 39,024# ← FRACTION SOLID

(E) = 813 × 1.0 = $\frac{813}{1626\#/'}$ × 48 = 39,024#

(N) = 687 × .75 = 522 × 63.2 = 32,548#

(S) = 687 × .76 = $\frac{522}{1037\#/'}$ × 63.2 = 32,900#

(B) OR (C) = 813 × 91% SOLID = 740#/' × 48.00 LENGTH = 35,520#

E-W LOADS

ROOF = 35.7 × 196 = 6997#/'
WALLS (E) & (W) = 1626
WALLS (B) & (C) 2 × 740 = 1480
10,103#/'

N-S LOADS

ROOF = 35.7 × 52' = 1856
WALLS (N) & (S) = 1037
CENTER BAY = 2893#/'

ROOF 1856
EXT. WALL 2 × 22 = 44
END BAYS = 1900#/'

Figure D-5. Continued.

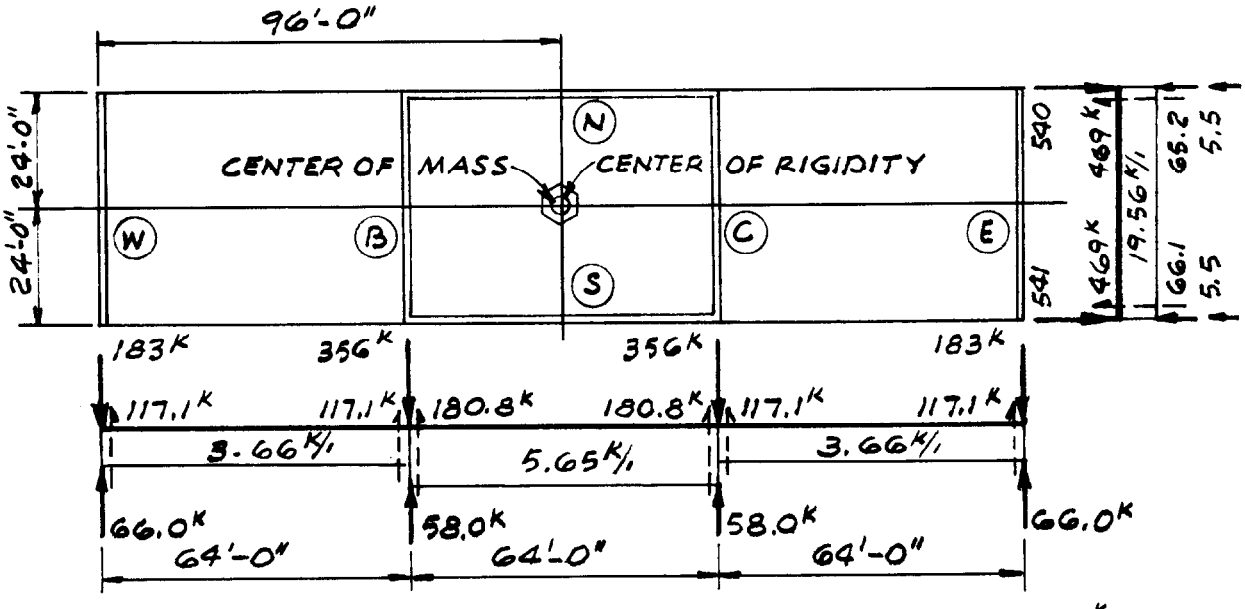

TOTAL $W_3 = 1078^K$

LOADING @ 100% g

LOADING FOR 3RD FLOOR DIAPHRAGM (2ND FLOOR SAME)

EXTERIOR WALLS (ACCOUNT FOR PERCENTAGE OF SOLID WALL - WINDOW OUT)

METAL PANEL

WALL WT. 4 P.S.F. × 11' = 44 × 62.8' = 2.76^K × 2 = 5,520#

10" CONC. WALL = .833 × 11' × 150 = 1375#/'

(W) = 1375 × 1.0 = 1375 × 48 = 66,000#

(E) = 1375 × 1.0 = 1375 × 48 = 66,000#
2750#/'

(N) = 1375 × 0.75 = 1031 × 63.3 = 65,262#

(S) = 1375 × 0.75 = 1045 × 63.3 = 66,149#
2076#/'

(B) OR (C) = 1.375 × 0.91 = 1251#/' × 46.33 = 57,970#

N-S LOADS

CENTER BAY

FLOOR 74.5 × 48 = 3576
WALLS (N) & (S) = 2076
5652#/'

END BAYS

FLOOR 74.5 × 48 = 3576
EXT. WALL 2 × 44 = 88
3664#/'

E-W LOADS

FLOOR 74.5 × 192 = 14,304
WALLS (E) & (W) = 2750
WALLS (B) & (C)
2 × 1251 = 2,502
19,556#/'

Figure D-5. Continued

LATERAL FORCES

$$V = \frac{ZIC}{R_W} W$$

$$Z = 0.4,\ I = 1.0,\ R_W = 12,\ S = 1.5$$

$$T = 0.020\,(h_n)^{3/4},\quad h_n = 34'$$

$$= 0.020\,(34)^{3/4} = 0.282 \text{ SEC.}$$

$$C = \frac{1.25S}{T^{2/3}} = \frac{1.25 \times 1.5}{(0.282)^{2/3}} = 4.36 \text{ USE } C_{MAX} = 2.75$$

$$V = \frac{0.4 \times 1.0 \times 2.75}{12} W = 0.092\,W$$

LEVEL	h_x	Δh	W_x	$W_x h_x$	$\frac{Wh}{\Sigma Wh}$	F	V	ΔM_{OT}	M_{OT}
ROOF	33'	11	584^k	19,272	.35	88^k	88^k	968	968
3RD	22'	11	1078	23,716	.43	108	196^k	2156	3124
2ND	11'	11	1078	11,858	.22	56	252^k	2772	5896
			W = 2740^k	54,846	1.0	252			

$V = 0.092 \times 2740 = 252^k$ $F_T = 0$ SINCE $T < 0.7$ SEC.

STORY FORCES FOR DESIGN

LEVEL	SHEAR WALL: F_x		STEEL FRAME $0.25F_x$	
ROOF	88^k	DISTRIBUTE TO CONC. SHEAR WALLS IN PROPORTION TO THEIR RELATIVE RIGIDITIES. INCLUDE ACCIDENTAL TORSION. SIM. TO FIG D-1	22^k	DISTRIBUTE TO STEEL FRAMES IN PROPORTION TO RELATIVE RIGIDITIES INCLUDE ACCIDENTAL TORSION. SIM. TO FIG D-3
3RD	108^k		27^k	
2ND	56^k		14^k	
	252^k		63^k	

Figure D-5. Continued

DESIGN EXAMPLE D-6

Wood Shear Panel System:

Description of Structure. A two-story wood framed classroom building in Zone 3, using wood floor and roof decks and wood stud walls. Girders and columns on centerline of building support roof rafters and floor joists. The structural concept is illustrated on Sheets 2 and 3.

Construction Outline.

Roof:
-opposition & gravel.
1" diagonal sheathing.
Wood rafters, wood girders, and columns.
Ceiling (drywall + acoustic tile).

2nd Floor:
3/4" plywood sheathing.
Asphalt-tile.
Wood floor -joists, steel girders & columns.
Ceiling (drywall + acoustic tile).

1st Floor:
Concrete slab-on-grade.

Exterior Walls:
Wood stud bearing walls with exterior and interior plaster.

Partitions:
The stair enclosure walls are wood stud with plywood sheathing on one. Other interior walls are removable drywall.

Design Concept. There is a line of columns and girders on the centerline of the building, but the exterior walls are bearing walls. Thus the structure does not have a complete vertical load-carrying space frame and is a Wood Box System with a R_w-factor of 8. The diagonally-sheathed roof acts as a diaphragm spanning between exterior walls. This is a very flexible diaphragm incapable of transferring significant rotational forces. The plywood sheathed second floor is a flexible diaphragm. This second floor diaphragm is interrupted by a stairwell. The permanent stair enclosure walls running in a north-south direction are therefore used as shear walls.

Discussion. The accompanying computations show the load diagrams and distribution of horizontal forces to the various shear walls and the unit shear and chord stresses in the diaphragm. Attention is called to the two second-floor struts which must transfer diaphragm shears to the shear walls on each side of the stairs. Double joists are used for these struts. Plywood sheathing is given for one of the stair walls. As this wall is short, it will be provided with special tie-down fastenings. Shear in piers of each wall are computed as proportional to the solid space between openings.

Figure D-6. Wood box system.

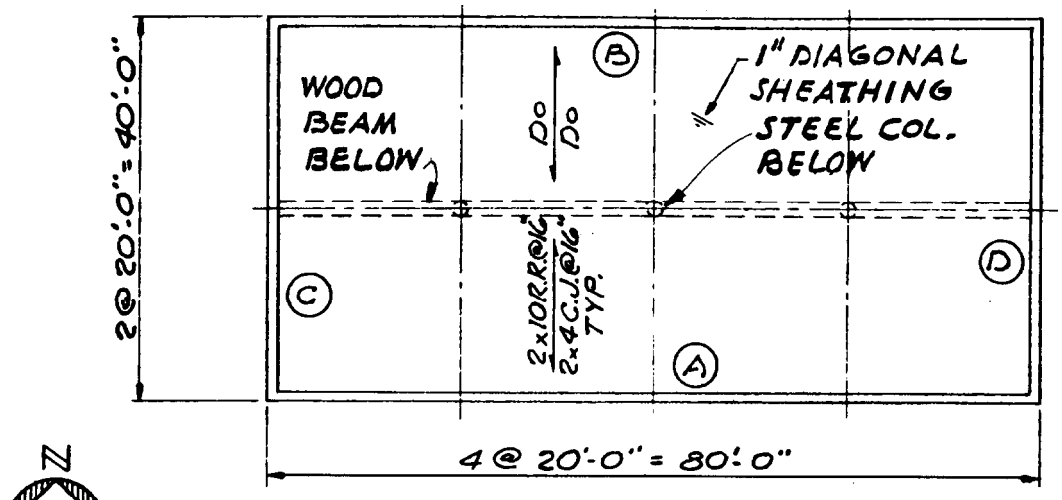

ROOF PLAN SCALE: 1" = 20'

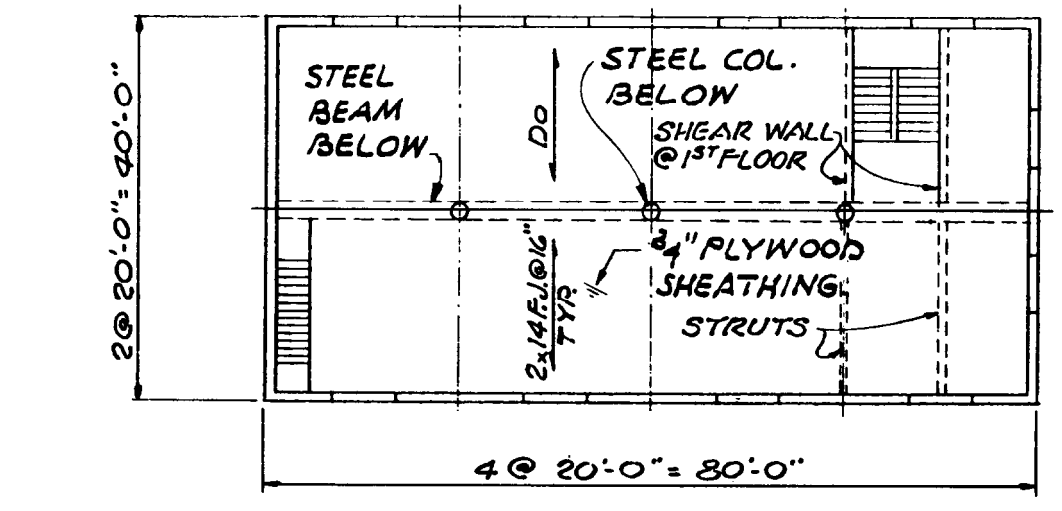

SECOND FLOOR PLAN SCALE: 1" = 20'

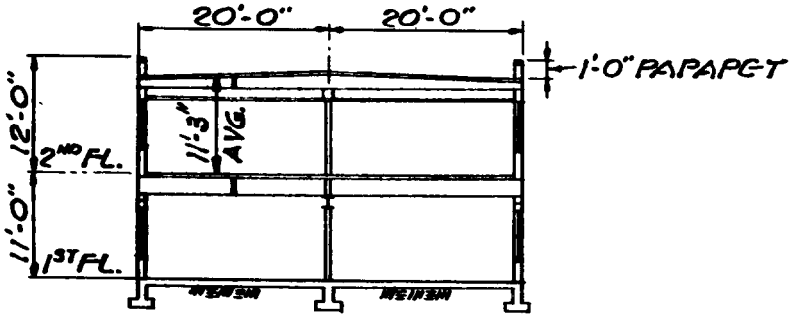

TYPICAL CROSS SECTION

Figure D-6. Continued.

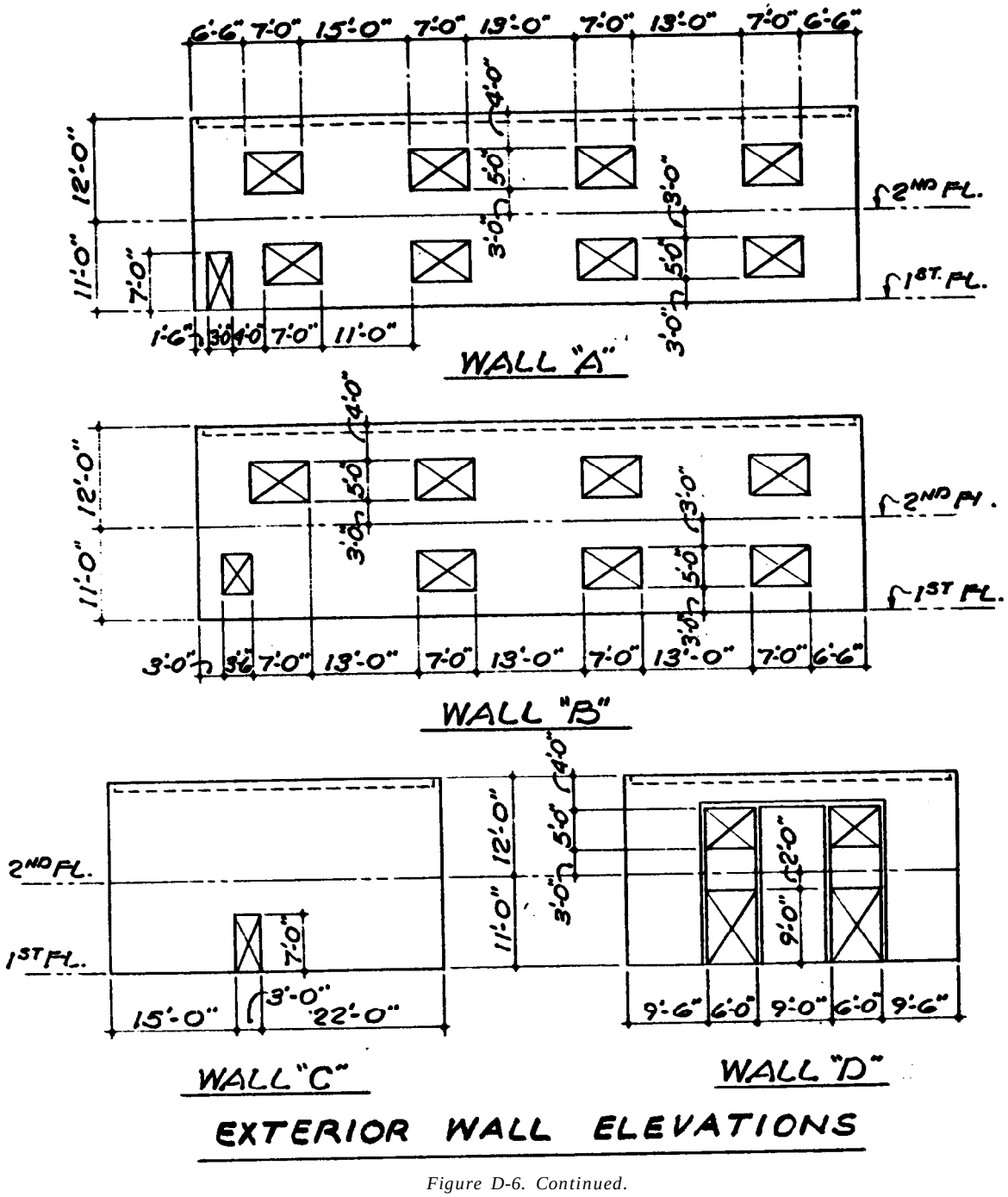

Figure D-6. Continued.

LOADS FOR ROOF DIAPHRAGM

ROOF

COMPO & GRAVEL ROOFING	= 6.6
1" DIAG. SHEATHING	= 1.5
RAFTERS & CEILING JOISTS	= 3.5
CEILING (DRYWALL + AC. TILE)	= 5.0
MISCELLANEOUS	= 1.0
DL	= 17.0
ADD PARTITIONS FOR SEISMIC	10.0
	27.6 PSF FOR SEISMIC

WALLS 11' HIGH & 1 FT. PARAPET
STUDS & PLASTER 18 PSF × 6.5' = 117.0 #/'

LOADING DIAGRAM - ROOF DIAPHRAGM

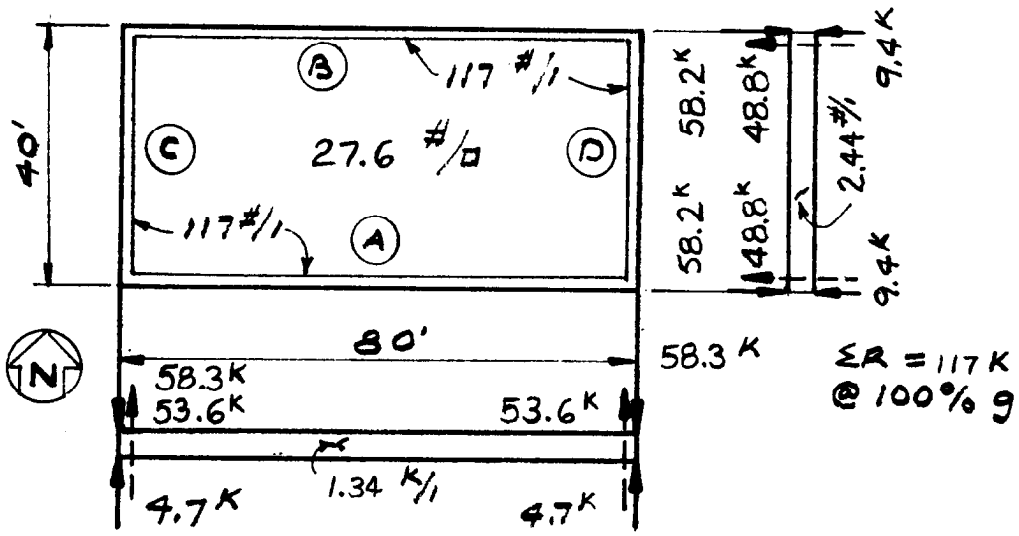

(N-S) LOADS

27.6 #/□' × 40'	= 1104 #/'
117 #/' × 2	= 234
	1338

WALL C OR D 117 × 40 = 4680#

(E-W) LOADS

27.6 × 80	= 2208
117 × 2	= 234
	2442

WALL A OR B 117 × 80 = 9360 #

Figure D–6. Continued.

LOADS FOR 2ND FLOOR DIAPHRAGM

FLOOR

ASPHALT TILE	=	1.0 #/□'
¾" PLYWOOD SHEATHING	=	2.3
FLOOR JOISTS	=	4.6
STEEL BEAMS & COLUMNS	=	1.0
CEILING & MECHANICAL	=	5.9
PARTITIONS	=	20.0
FLOOR DEAD LOAD	=	34.8 #/□'

WALLS

EXTERIOR: 18 #/□' × 11' = 198 #/'

INTERIOR: 18 × 5.5 = 99

LOADING DIAGRAM - 2ND FLOOR DIAPHRAGM

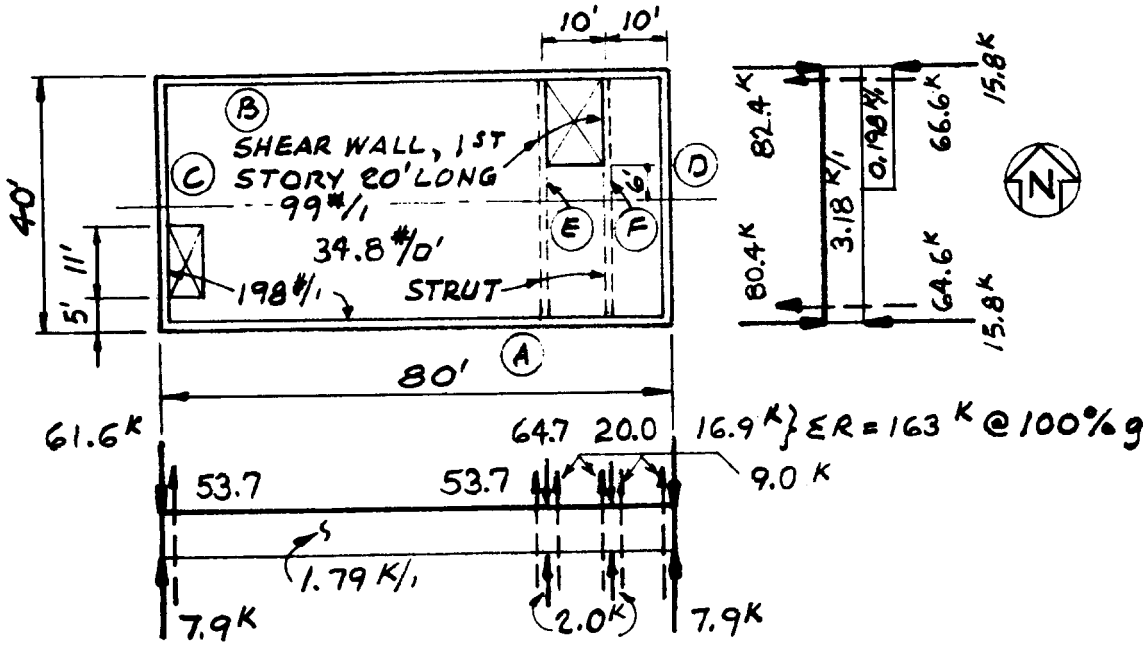

(N-S) LOADS

34.8 × 40 = 1392

198 × 2 = 396

1788 #/'

WALL C OR D = 198 × 40 = 7920#

WALL E OR F = 99 × 20 = 1980#

(E-W) LOADS

34.8 × 80 = 2784

198 × 2 = 396

3180

WALL E & F = 99 × 2 = 198 #/'

WALL A OR B = 198 × 80 = 15,840#

Figure D-6. Continued.

LATERAL FORCES

$$V = \frac{ZIC}{R_w} W$$

$Z = 0.30, \quad I = 1.0, \quad R_w = 8, \quad S = 1.5$

$T = 0.020\,(h_n)^{3/4}, \qquad h_n = 22.25'$

$= 0.020\,(22.25)^{3/4} = 0.205$ SEC

$$C = \frac{1.25S}{T^{2/3}} = \frac{1.25 \times 1.50}{(0.205)^{2/3}} = 5.39, \text{ USE } 2.75$$

$$V = \frac{0.30 \times 1.0 \times 2.75}{8} W = 0.103\,W$$

$$\text{STORY FORCE } F_x = \frac{wh}{\Sigma wh}(V)$$

LEVEL	W_x	h	wh	$\frac{wh}{\Sigma wh}$	F_x
ROOF	117 K	22.25'	2603	0.59	17.0
2ND FLR.	163 K	11.0'	1793	0.41	11.8
W =	280		4396	1.0	28.8

$V = 0.103 \times 280^{K} = 28.8^{K}$

Figure D-6. Continued.

LATERAL FORCE STORY FORCE = 17.0^K

DIAPHRAGM FORCE

$F_{px} = \frac{\Sigma F_i}{\Sigma W_i} W_{px} = \frac{17}{117} W_{px} = 0.145\ W_{px}$ ← GOVERNS

MIN. $F_{px} = 0.35\,ZIW_{px} = 0.35 \times .3 \times 1 \times W_{px} = 0.105\ W_{px}$

MAX. $F_{px} = 0.75\,ZIW_{px} = 0.75 \times .3 \times 1 \times W_{px} = 0.225\ W_{px}$

DIAPHRAGM STRESSES $W = 0.145\ W_{px}$

	BENDING M $= WL^2/8$	CHORD FORCE $= M/D$	SHEAR V $= WL/2$	v $= V/D$
N-S	$(1.34 \times 0.145) \times 80^2/8 = 155^K$	$\div 40' = 3.88^K$	7.76^K	$\div 40' = 0.19^K/FT$
E-W	$(2.44 \times 0.145) \times 40^2/8 = 71^K$	$\div 80' = 0.89^K$	7.07^K	$\div 80' = 0.09^K/FT$

SHEATHING $v_{MAX.} = 190\#/1$

1x DIAGONAL SHEATHING - DOUGLAS FIR

VERY FLEXIBLE DIAPHRAGM WEB: F = 250 (TABLE 5-1 & 5-2)
ALLOWED DIAPHRAGM LENGTH = 2 × WIDTH (TABLE 5-1)
ALLOWED SHEAR = 300 #/FT. (TABLE 5-2)

CONNECTIONS

CHORD SPLICE NEAR MIDSPAN OVER WALL A OR B P = 3880#

TOP PLATE OF STUD WALL IS CHORD. LAP PLATES AND CONNECT WITH 3-¾"ϕ BOLTS EACH SIDE OF SPLICE. CAPACITY IN SINGLE SHEAR IN 1½" MEMBERS = 3 × 1350# × 1.33 = 5.40^K.

CHORD SPLICE NEAR MIDSPAN OVER WALL C OR D P = 890#

EDGE ROOF RAFTER IS CHORD. PROVIDE 7-16d NAILS EACH SIDE OF SPLICE. CAPACITY = 7 × 107# × 1.33 = 996#

DIAPHRAGM CONNECTION WALL A OR B $v = 90\#/1$

BLOCKING TO BLOCKING & BLOCKING TO PLATE (Sect. A, FIGURE 5-23). PROVIDE 2-16d (OR METAL FRAMING ANCHORS)
284 BETWEEN RAFTERS. CAPACITY = (2 × 107 × 1.33) ÷ 1.33^{FT} = 214#/FT

DIAPHRAGM CONNECTION TO WALL C OR D $v = 190\#/1$

RAFTER TO BLOCKING & BLOCKING TO TOP PLATE (Sect. C, FIGURE 5-23) USE 16d @ 8" O.C. CAPACITY = (107# × 1.33 ÷ 0.67 = 212#/FT
284

Figure D–6. Continued.

2ND FLOOR DIAPHRAGM

LATERAL FORCE STORY FORCE = 11.8^K $\frac{11.8}{163} = 0.0724$

DIAPHRAGM FORCE

$$F_{px} = \frac{28.8}{280} W_{px} = 0.103 \; W_{px} \longleftarrow \text{GOVERNS}$$

$$\text{MIN. } F_{px} = 0.103 \; W_{px}$$

DIAPHRAGM STRESSES

	BENDING M $WL^2/8$	CHORD FORCE $= M/D$	SHEAR V $= WL/2$
N-S	$(1.79 \times 0.103) \times \overline{60}^2/8 = 83.0^{K'}$	$\div 40' = 2.08^K$	5.53^K
E-W	$(3.18 \times 0.103) \; \overline{40}^2/8 = 65.5$	$\div 80' = 0.82^K$	6.55^K

WALL	L	V	v	CASE *	BOUNDARY NAILS	PANEL NAILS	ALLOWED v
A	80'	6550#	82#/'	3	6" C.C.	6" C.C	215#/'
B, WEST OF STAIR	60'	"	109				
C, NORTH OF STAIR	24'	5530'	230	1	6" C.C.	6" C.C.	285#/'
E, PLUS STRUT	40'	"	138				

* SEE TABLE 5-6:
UNBLOCKED DIAPHRAGM, C-C EXT-APA PLYWOOD.
USE VALUES FOR 5/8" PLYWOOD, 10d NAILS, 2×MEMBERS.

FLEXIBILITY

USE L = 60' (DIAPH. SPANING FROM WALL C TO E)
FORMULA 5-33: $q_{AVE} = 230$ $q_d = 285$

$$F = \frac{33{,}000 \, q_{AVE}}{q_d^2} = \frac{33{,}000 \times 230}{(285)^2} = 93$$

TABLE 5-1: DIAPH. IS "FLEXIBLE". MAX SPAN = 100' > 60' OK
WITH FLEXIBLE WALLS AND NO CALCULATED TORSION IN
THE DIAPH. THE MAX. SPAN = 3 × DEPTH OR 3×40'
= 120' > 60' OK

Figure D-6. Continued,

2ND FLOOR DIAPHRAGM - CONT'D.

CONNECTIONS

CHORD SPLICE AT WALL A OR B $P = 2080^{\#}$

SIMILAR TO ROOF. USE 2-5/8"ϕ BOLTS EACH SIDE.

CAPACITY $= 2 \times 1000^{\#} \times 1.33 = 2660^{\#}$

CHORD SPLICE AT WALL C OR D $P = 820^{\#}$

SIMILAR TO ROOF. USE 6-16d NAILS EACH SIDE.

CAPACITY $= 6 \times 107^{\#} \times 1.33 = 854^{\#}$

DIAPHRAGM AT WALL A

WALL ABOVE, SOLE PLATE TO BLOCKING, 2-16d BETWEEN RAFTERS FOR $90^{\#}/FT$, AS AT TOP PLATE.

BLOCKING TO BLOCKING AND BLOCKING TO TOP PLATE:

SHEAR FROM ROOF & FLOOR $= 90 + 82 = 172^{\#}/FT$

USE 2-16d BETWEEN RAFTERS, SIMILAR TO ROOF.

CAPACITY $= 214^{\#}/FT$.

DIAPHRAGM AT WALL B

SIMILAR TO WALL A. SHEAR $= 90 + 109 = 199^{\#}/FT$, USE 2-16d

DIAPHRAM AT WALL C

WALL ABOVE, SOLE PLATE TO EDGE RAFTER.

USE 16d @ 8" C.C. FOR $190^{\#}/FT$, AS AT ROOF.

RAFTER TO BLOCKING AND BLOCKING TO TOP PLATE:

SHEAR FROM ROOF & FLOOR $= 190 + 230 = 420^{\#}/FT$

USE 16d @ 4" C.C.

CAPACITY $= 107^{\#} \times 1.33 \div 0.33' = 431^{\#}/FT$

DIAPHRAGM AT WALL E

NO WALL ABOVE.

STRUT IS DOUBLE JOIST EXTENDING OVER WALL E, SIMILAR TO PLAN A, FIG. 5-23

$$\text{STRUT FORCE} = \left(\frac{20'}{40'} \times 0.183^{K}/FT \times \frac{60'}{2}\right) + \left(\frac{20'}{26'} \times 0.183 \times \frac{10'}{2}\right)$$

$$= 3.45^{K}$$

USE 2-3/4"ϕ BOLTS, DOUBLE JOIST TO $\angle 4 \times 4 \times 1/4$ AND 2-3/4"ϕ BOLTS, ANGLE TO DOUBLE TOP PLATE OF WALL E.

CAPACITY IN SINGLE SHEAR IN 3" OF WOOD WITH METAL SIDE PLATE $= 2 \times (1.25 \times 1470^{\#}) \times 1.33 = 4888^{\#}$

Figure D-6. Continued.

SHEAR WALLS

WALL E

2ND STORY FORCE = 0.072 × FLOOR WEIGHT

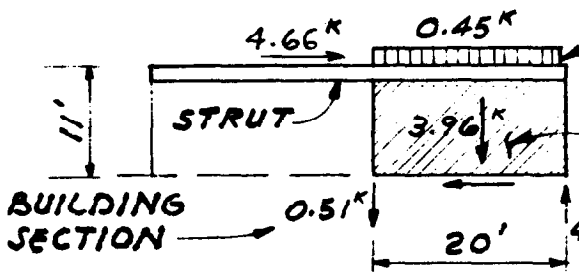

2ND FLR. DL = $\frac{1.33'}{2}$ × 20' × 34.8 PSF = 463#

WT. OF WALL = 20' × 11' × 18 PSF = 3960#

TOTAL DL = 4410#

SEISMIC LOADS (0.072 × FLOOR WT.)
DIAPH. LOADING DIAGRAM

FROM THE WEST	0.072 × 53.7 K	= 3.87 K
FROM THE EAST	× 9.0	= 0.66
FROM THE WALL	× 2.0	= 0.14
	WALL V	= 4.66 K

WALL SHEAR $V = \frac{4660\#}{20'} = 233\#/'$

USE 5/16" STRUCT. I EXT. - APA PLYWOOD ONE SIDE 6d @ 4" AT PANEL EDGES, 6d @ 12" AT INTERMEDIATE SUPP'TS. ALLOWABLE SHEAR = 300#/' (FIGURE 6-18)

OVERTURNING M = 4660# × 11' = 51,260 #'

WALL REACTIONS = $\frac{4410\#}{2} \pm \frac{51{,}260\#'}{19'}$ = 2205 ± 2698

DOWN LOAD = 2205 + 2698 = 4903
UP LOAD = 0.85 (2205) − 2698 = −824 (SEAOC 1H1b)

TIE DOWN (FIG. 6-20)

POST BOLTS TO ANGLE: 2-5/8" ϕ SINGLE SHEAR 2 1/2" NET, WITH METAL SIDE PLATES: ALLOW 2 × (1.25 × 1020#) × 1.33 = 3392# > 824#. ANCHOR BOLT: 5/8" ϕ ALLOW 1.33 × 3000 = 4000# ∠4 × 4 × 5/8 × 0'-3 1/2": S = (3 1/2 − 7/8") (5/8")²/6 = .173 IN³
M = 511# × (2 1/2 − 11 = 767 #" F = 767/.173 = 4333 PSI

Figure D-6. Continued

SHEAR WALLS CONT'D.

WALL (D)

TREAT AS 3 EQUAL CANTILEVER PIERS
ASSUME NO MOMENT DEVELOPED IN SPANDRELS.

SPLICE FOR VERTICAL CONTINUITY TYPICAL AT ALL PIERS.

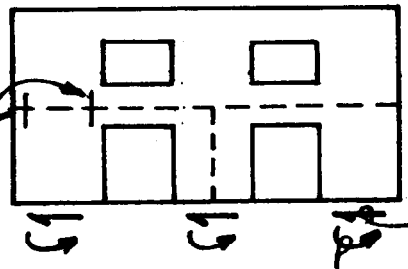

$\rightarrow .145 \times 58.3^k = 8.45^k \times 22.3 = 189$

$\rightarrow .072 \times 16.9^k = 1.22^k \times 11.0 = 13$

$9.67^k \quad M_{OT}\ 202^{k'}$

$V = \frac{9.67}{3} = 3.22^k$

$M = \frac{202}{3} = 67.3^{k'}$

WALL SHEAR
1ST. STORY:

$v = \frac{9670}{3 \times 9} = 358\ ^{\#}/_{FT}$

WALL HT/WIDTH

$= \frac{11.3}{9} = 1.25 < 2$ OK

EXT. LATH & PLASTER - 200
INT. " " " - 100
1" DIAG. SHEATING - - - 300
ALLOW. v = 600 #/FT.

OVERTURNING:	2ND STORY	1ST STORY
WT. OF WALL	$9' \times 12' \times 18$ psf. = 1944#	$9' \times 23' \times 18$ = 3613#
DL OF ROOF	$15' \times \frac{8}{12} \times 17$ psf = 170	170
DL OF FLOOR		$15 \times \frac{8}{12} \times 34$ = 340
TOTAL DL	2114#	4123#
O.T. MOMENT	$\frac{8.45^k \times 11.3}{3} = 31.8^{k'}$/PIER	$\frac{202}{3} = 67.3^{k'}$/PIER
O.T. FORCE	$\frac{31.8}{8.5'} = 3.75^k$	$\frac{67.3}{8.5'} = 7.92^k$
REACTIONS	$\frac{2114}{2} \pm 3750$	$\frac{4123}{2} \pm 7920$
DOWN LOAD	1057 + 3750 = 4807	2062 + 7920 = 9982
UPLIFT	0.85(1057) - 3750 = -2852	0.85(2062) - 7920 = -6167

Figure D-6. Continued.

SHEAR WALLS - CONT'D

WALL (D) CONT'D

UPLIFT AT 2ND FLOOR $F = 2852^{\#}$

PROVIDE VERTICAL CONTINUITY WITH METAL SPLICE PLATE 3/16" x 2½" WITH 2-⅝" BOLTS EACH END. ALLOW $2 \times (1.25 \times \frac{2030}{2}) \times 1.33 = 3375^{\#} > 2852$

TIE DOWNS AT 1ST FLOOR $F = 6167^{\#}$

USE STIFFENED ANGLE (FIG. 6-20) 3-¾" ϕ BOLTS TO 4x4 POST, SINGLE SHEAR IN 2½" NET WITH METAL SIDE PLATE. ALLOW $3 \times (1.25 \times \frac{2870^{\#}}{2}) \times 1.33 = 7157^{\#}$

⅞" ϕ ANCHOR BOLTS WITH 3" x 3" WASHER

NET AREA OF WASHER = 8 IN.^{2}
ALLOW 600 PSI IN B'R'G: $600 \text{ PSI} \times 8 \times 1.33 = 6400^{\#}$

NOTE THAT FOOTING MUST BE REINFORCED SO THAT THE BOLT CAN PICK UP ABOUT 1.5 CU. YDS OF CONCRETE.

Figure D–6. Continued.

SHEAR WALLS - CONT'D

WALL (C)

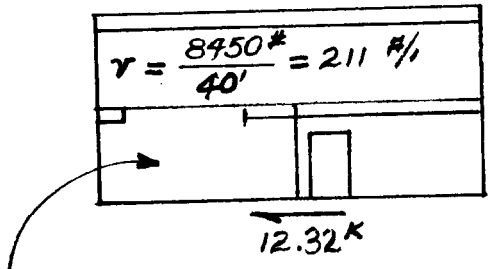

$v = \frac{8450^{\#}}{40'} = 211\ \#/'$

$.145 \times 58.3^K = 8.45^K \times 22.3 = 189^K$

$.072 \times 53.7^K = 3.87^K \times 11.0 = 43$

$12.32^K \quad M_{OT} = 232^{K'}$

$v = \frac{12,320}{15' + 22'} = 333\ \#/'$

WT. OF WALL $= 18\ psf \times 23$
$= 414\ \#/'$

RESISTING MOMENT
$M_R = 0.414^{K}/' \times 40' \times 20'$
$= 331 > 232^{K'}$
$\therefore$ NO UPLIFT

SHEATHING:
2ND STORY:
EXT. + INT. LATH & PLASTER
$200 + 100 = 300\ \#/' > 212$
1ST STORY:
ADD 1" DIAG. SHEATHING
$300 + 300 = 600\ \#/' > 335$

WALL (A) ((B) SIMILAR)

	F	V	NET L	v
ROOF 0.145 × 58.2 =	8.44	8.44	52'	162 #/'
FLOOR 0.072 × 80.4 =	5.79	14.23	47.5'	300

SHEATHING:
2ND STORY EXT. + INT. L + P $300\ \#/' > 162$
1ST STORY ADD 4 LET-IN BRACES
$300\ \#/' + \frac{4 \times 1000^{\#}}{47.5} = 384\ \#/' > 300$

Figure D-6. Continued.

DESIGN EXAMPLE D-7

Special Configuration:

Description of Structure. A one-story industrial garage building in Seismic Zone 3. The north, east, and west walls are concrete bearing walls. The south wall is largely open for drive-in access and has concrete columns and concrete beams over the openings. The roof is concrete slab and beams. The structural concept is illustrated on Sheets 2 and 3.

Design Concept. The roof is a reinforced concrete beam and slab system forming a relatively rigid diaphragm, even with a 6 to 1 length-width ratio. The north, east, and west walls are concrete bearing walls. The south wall is a rigid frame. The lateral forces are resisted by shear walls. The building is a Box System with $R_w = 6$.

Discussion. An estimate of the relative deflections and stiffnesses of the north wall versus the south wall rigid frame indicates that practically all of the east-west forces would be carried by the north wall. The resulting rotation is resisted by the east and west walls. A computation of the deflection of the roof diaphragm in resisting north-south forces is shown. The transverse bents formed by the south wall columns, the transverse roof beams, and a portion of the north wall are checked to see if these bents are adequate for the vertical load carrying capacity and the induced moment due to $3R_w/8$ times the deflection resulting from the lateral forces. The vertical load stresses in the south wall beams will be combined with chord stresses of the roof diaphragm.

LATERAL FORCES

$$V = \frac{ZIC}{R_w} W$$

$$Z = 0.3,\ I = 1.0,\ R_w = 6,\ S = 1.5$$

$$T = 0.020\,(h_n)^{3/4} \qquad h_n = 16.0'$$

$$= 0.020\,(16.0)^{3/4} = 0.16 \text{ SEC.}$$

$$C = \frac{1.25S}{T^{2/3}} = \frac{1.25 \times 1.5}{(0.16)^{2/3}} = 6.36,\ \text{USE } 2.75$$

$$V = \frac{0.3 \times 1.0 \times 2.75}{6} W = 0.138\,W$$

Figure D-7. Special configuration.

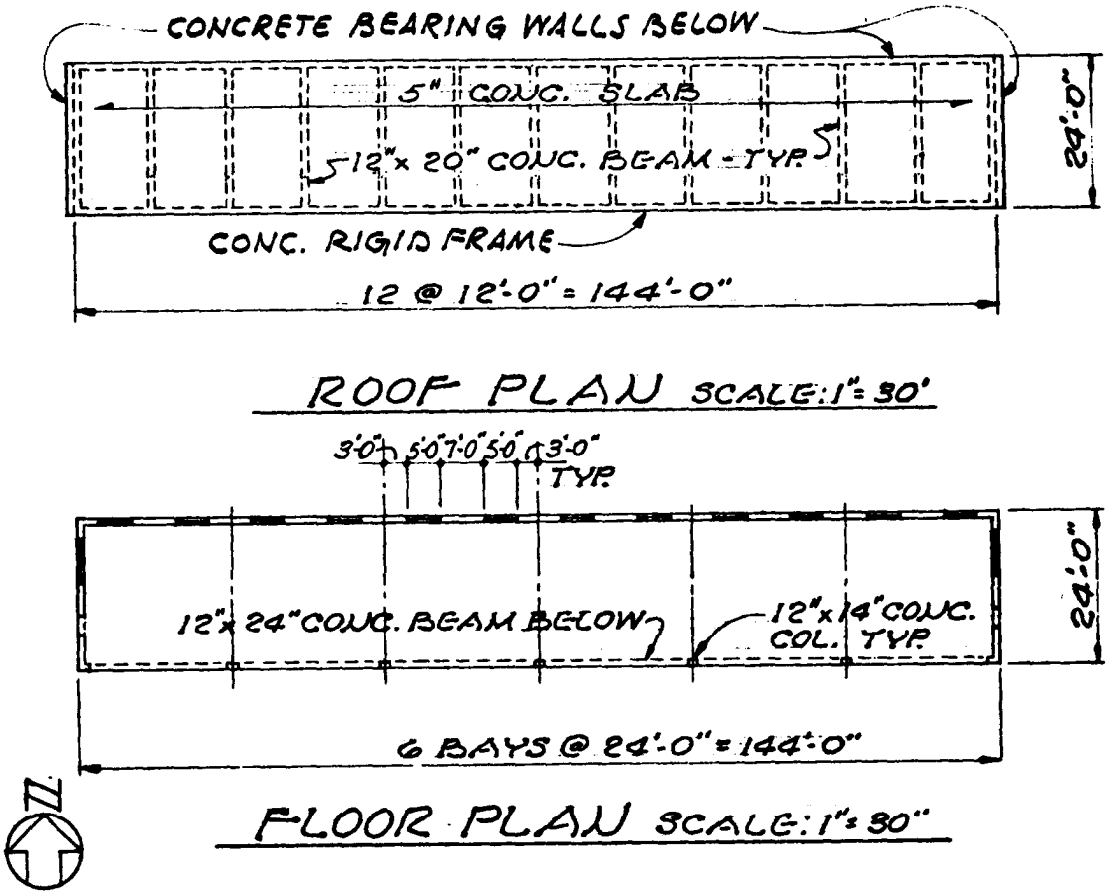

Figure D-7. Continued

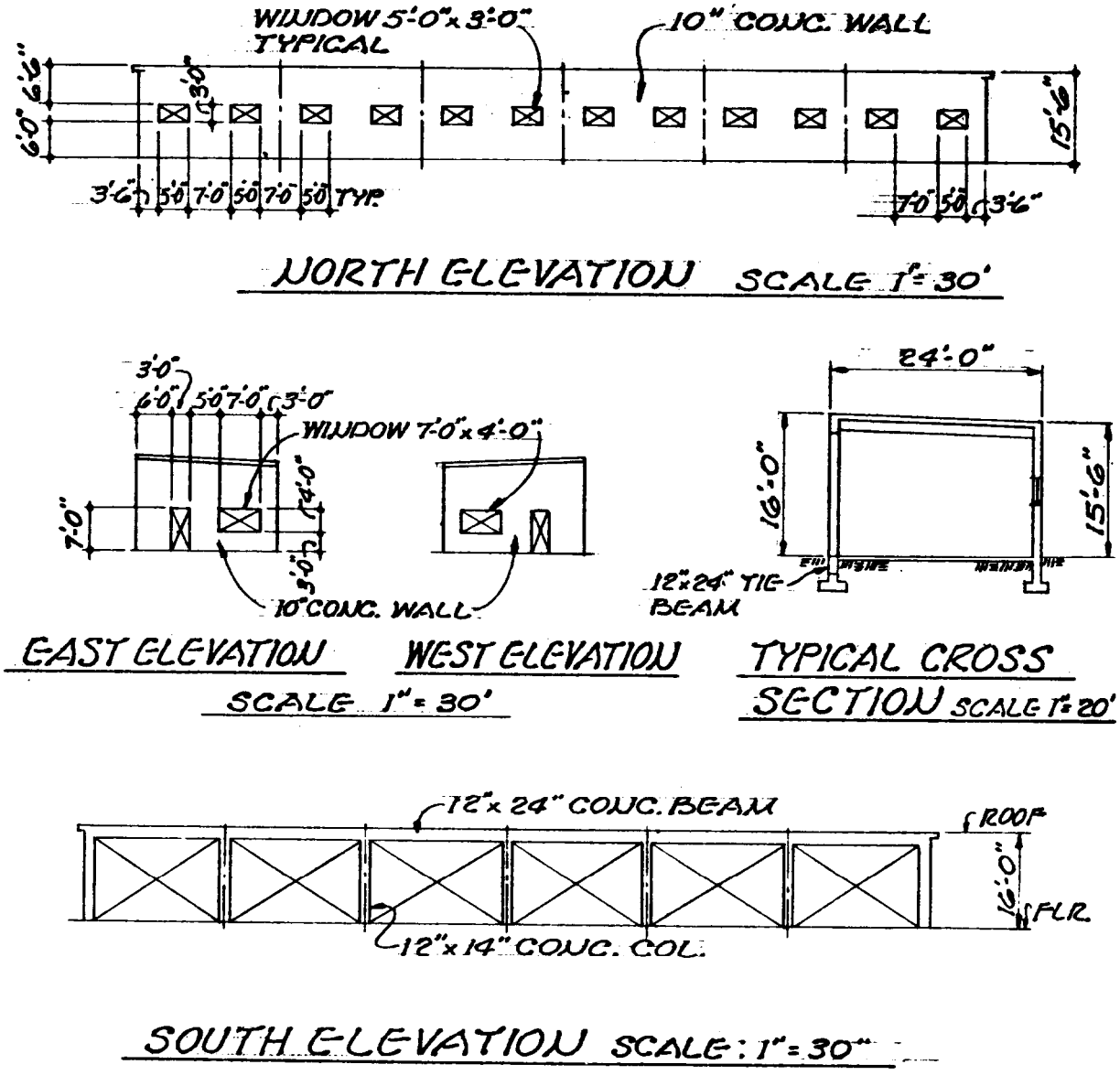

Figure D-7. Continued.

ROOF D.L.

COMPO & GRAVEL ROOF	7.0
5" CONC. SLAB	63.0
BEAMS	16.0
	86.0 #/□'

12"x 24" CONC. BEAM = 150 x 1.58 = 237 #/,

COLUMNS = 1 x 1.17 x 150 x $\frac{14}{2}$ = 1228 #

EXTERIOR WALLS

N. WALL 10" CONC. 125 x 7.55 = 945 #/,

E. & W. END WALLS 125 x 7.88 = 985 #/,

SEISMIC N-S

ROOF 86 x 24 = 2060

N. WALL = 945

BEAM = 237

COLS. = $\frac{5 \times 1228}{144}$ = 43

DOOR OR COVER 10x7 = 70

.138 x 3355 = 463 #/,

END WALL 985 x 24 = 23,600 x .138 = 3.3 K

SUMMARY

2 END WALLS @ 3.3	= 6.6
DIAPHRAGM 0.463 x 144	= 66.7
TOTAL SEISMIC WEIGHT	= 73.3 K

SEISMIC E-W

ROOF 86 x 144 = 12,400

WALLS 2 x 985 = 1,970

.138 x 14,370 = 1980 #/,

N. WALL 945 x 144 = 136,000 x .138 = 18.8 K

S. WALL

BEAM 237 x 144 = 34,200

COLS. 1228 x 5 = 6,140

COVER 60 x 144 = 8,650

.138 x 48,990 = 6.8 K

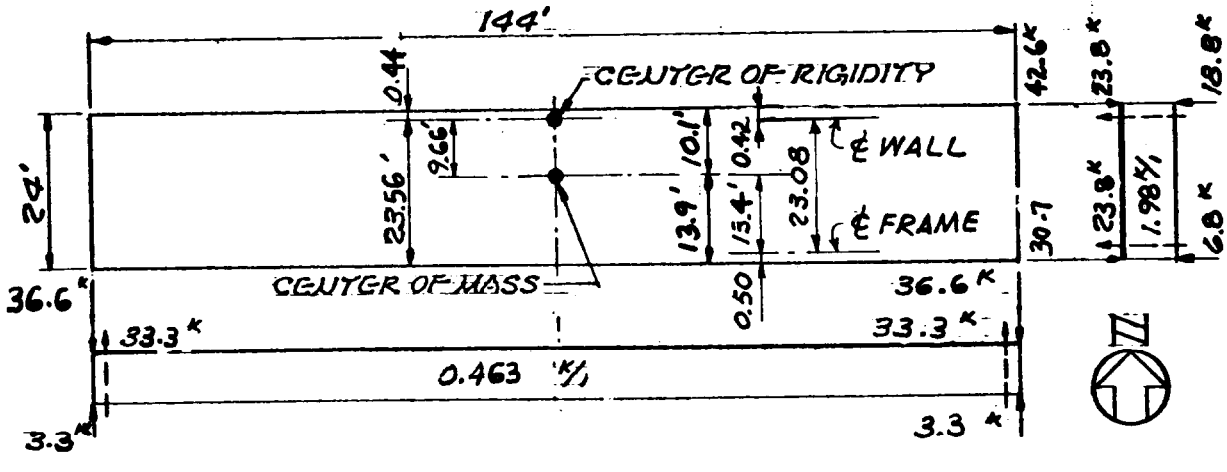

SEISMIC LOADS

Figure D-7. Continued.

RELATIVE RIGIDITIES

NORTH WALL

USING CHART FOR DEFLECTION (FIG. G-4) DEFLECTIONS TABULATED BELOW FOR 10" WALLS, ARE 12/10 TIMES THE CHART VALUE WHICH ARE FOR 12" WALLS.

PIER	h	d	h/d	Δ	K
1 CF	3	3.5	.86	.0852	11.75
2 RF TO 12 INCL	3	7.0	.43	.0458	21.82 x 11 = 240.0
13 CF	3	3.5	.86	.0852	11.75
					263.5
WALL RC	15.5	144	.1077	.0108	
BAND RF @ WIND.	3	144	.0208	.0024	

Δ PIERS (1-13) = 1/263.5 = 0.0038

Δ WALL = .0108 − .0024 + 0.0038 = 0.0122

K (WALL) = 1/0.0122 = 82.6

NOTE:
CF INDICATES CORNER PIER, FIXED CONDITION
RC INDICATES RECTANGULAR PIER CANTILEVER CONDITION

SOUTH WALL (RIGID FRAME)

DEFLECTION OF PIERS - BEAM FIXED

PIER	h	d	h/d	Δ	K
1 CF & 7 CF	14	1.17	12	32.8	.0305 x 2 = .061
2-6 RF INCL.	14	1.17	12	49	.0204 x 5 = .1020
WALL RC	16	144	.111	.0095	
@ OPNGS RC	14	144	.097	.0085	

$\Sigma\Delta = 12 \times .0694 + 12^3 \times .0185 = 32.8$

$\Sigma\Delta = 12 \times .08334 + 12^3 \times .0278 = 49.0$

$\Delta_{1-7} = \dfrac{1}{.061 + .1020} = 6.14$

Δ WALL = .0095 − .0085 + 6.14 = 6.141

DEFLECTION DUE TO ROTATION OF BEAM

$\theta = \dfrac{M_0}{EI}\left(a - \dfrac{a^2}{L} - \dfrac{L}{3}\right)$ @ CENTER OF BEAM $a = \dfrac{L}{2}$

$\dfrac{M_0}{EI}\left(-\dfrac{L}{12}\right)$ USE P = 1000 K, M = 1.000 x 14 = 14.000 K'

$\theta = \dfrac{14{,}000{,}000 \times 12}{3{,}000{,}000 \times 13824}\left(\dfrac{-24' \times 12''/'}{12}\right) = 0.0972$

$\theta h = 0.0972 \times 14 \times 12 = 16.33''$

TOTAL DEFLECTION = 6.14 + 16.33 = 22.47'

$K\,(\text{WALL}) = \dfrac{1}{22.47} = 0.0445$

Figure D-7. Continued.

RELATIVE RIGIDITIES (CONT.)

EAST & WEST WALLS

PIER	h	d	h/d	Δ	K
1^{CF}	7	6	1.17	.132	7.6
2^{RF}	4	5	.8	.0966	10.35
3^{CF}	4	3	1.33	.168	5.96
4_a^{CF}	4	15	.267	.0222	
4^{CF}	7	15	.466	.0408	
5_a^{CF}	7	24	.292	.0246	
5^{CC}	15.75	24	.656	.0804	

$\Delta_{2-3} = \frac{1}{10.35+5.96} = 0.0613$

$\Delta_{1-4} = \frac{1}{7.6+12.5} = .0498$

$\Delta_4 = .0408 - .0222 + .0613 = .0799 \quad K_4 = \frac{1}{.0799} = 12.5$

$\Delta_{WALL} = .0804 - .0246 + .0498 = .1056$ (FOR $P = 1{,}000^k$)

$K_{WALL} = \frac{1}{.1056} = 9.47 \quad \Delta_{WALL}$ FOR $P = 35.6^k = \frac{35.6}{1000}(.1056)$

$= 0.0038''$

CENTER OF RIGIDITY

N-S: ON BLDG. ℄ BY INSPECTION

E-W: NORTH WALL $K = 82.6 \times 23.08 = 1906 \quad \bar{X} = \frac{1906}{82.64} = 23.06$

SOUTH WALL $K = \frac{0.0445}{82.64} \times 0 = \frac{0}{1906}$

AT N. WALL

CENTER OF MASS

N-S: ON BLDG. ℄ BY INSPECTION

E-W: NORTH WALL $R = 42.6 \times 23.08 = 983.2 \quad \bar{X} = \frac{983.2}{73.3} = 13.4'$

SOUTH WALL $R = \frac{30.7}{73.3^k} \times 0 = \frac{0}{983.2}$

Figure D-7. Continued.

DISTRIBUTION OF FORCES

WALL SHEARS FOR N-S FORCES

WALL	K	$\frac{K}{\Sigma K}$	V_D	d	d^2	Kd^2	$\frac{kd}{\Sigma kd^2}$	V_T	V_A	V_W
N	82.6	—	—	0.02	~	~	~	0	0	0
S	0.04	—	—	23.08	533	21.3	9.5×10^{-6}	0	.005	.005
	82.64									
E	9.47	0.5	36.7	71.6	5127	48,600	.00697	0	3.7	40.4
W	9.47	0.5	36.7	71.6	5127	48,600	.00697	0	3.7	40.4
	18.94					97,220				

$V = 73.3^K$

ECCENTRICITY = 0, $M_T = 0$

ACCIDENTAL TORSION =

$M_A = V(0.05L) = 73.3\,(0.05 \times 144) = 528_{K'}$

DIRECT SHEAR, $V_D = \frac{K}{\Sigma K} V$

TORSIONAL SHEAR, $V_T = \frac{Kd}{\Sigma Kd^2} \cdot M$

TOTAL SHEAR, $V_W = V_D + V_T + V_A$

WALL SHEARS FOR E-W FORCES

N		1.0	73.3					0	0	73.3
S		4.8×10^{-4}	0.035					.007	.001	.043
E		—	—					4.93	0.61	5.54
W		—	—					4.93	0.61	5.54

$V = 73.3$

ECC. = 9.66 $M_T = 73.3 \times 9.66 = 708_{K'}$

$M_A = 73.3\,(0.05 \times 24) = 88_{K'}$

Figure D-7. Continued.

E-W EARTHQUAKE

NORTH WALL

FACTORED DESIGN LOAD = 1.4 x 73.3 = 103^K

$$v_u = \frac{V_u}{\varphi A_c} = \frac{103{,}000}{0.60 \times (144' - 60')12''/_1 \times 10''} = 17 \text{ PSI}$$

SOUTH WALL

RIGIDITY ANALYSIS FINDS NEGLIGIBLE DESIGN FORCE FOR THE SOUTH WALL.
∴ DESIGN THE FRAME FOR VERTICAL LOAD PLUS INDUCED MOMENTS DUE TO $3R_w/8$ TIMES THE DISTORTION RESULTING FROM THE LATERAL FORCE.

$$\Delta = \frac{3(6)}{8}(\Delta_{N.WALL} + \Delta_{DIAPH.})$$

IN THE CASE WHERE THE DIAPHRAGM FLEXIBILITY WOULD PERMIT THE FRAME TO DEFLECT SIGNIFICANTLY MORE THAN THE NORTH SHEAR WALL, A DUCTILE FRAME WOULD BE PROVIDED.

N-S EARTHQUAKE

DIAPHRAGM $M = \frac{0.463 \times 144^2}{8} = 1200^{K'}$

CHORD $F = \frac{1200^{K'}}{23'} = 52.2^K$; $A_s = \frac{52.2 \times 1.4}{40 \times 0.9} = 2.03^{\square''}$

CONT. CHORD BARS 2-#9

END WALLS: DESIGN FORCE, F = 40.4K
FACTORED DESIGN FORCE FOR OVERTURNING = 1.4 x 40.4 = 56.6K; M_{OT} = 56.6 x 15.8' = 894 K'
FACTORED DESIGN FORCE FOR SHEAR = 1.4 x 40.4 = 56.6 K

Figure D–7. Continued.

TRANSVERSE FRAMES

THESE WERE NEGLECTED IN THE RIGIDITY ANALYSIS. CHECK THAT THEY CAN TAKE 3Rw/8 TIMES THE DEFLECTION CALCULATED FOR THE ROOF DIAPHRAGM ACTING WITHOUT THE FRAMES.

DIAPHRAGM DEFLECTION

FLEXURAL DEFLECTION

ASSUMED SECTION

$I = 19{,}120{,}000\ IN^4$

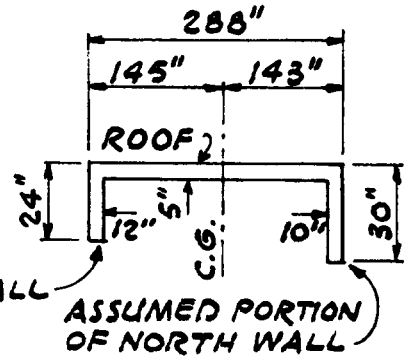

$$\Delta_f = \frac{5wL^4 \times 1728}{384EI}$$

$$\Delta_f = \frac{5 \times 463 \times 143.17^4 \times 1728}{384 \times 3 \times 10^6 \times 19.12 \times 10^6} = 0.076$$

SHEARING DEFLECTION OF WEB

$$\Delta_w = \frac{q_{AVE} \times L \times F}{10^6} \qquad \text{WHERE } q_{AVE} = \frac{33{,}300}{2 \times 24} = 694\ K/'$$

$$F = \frac{10^6}{8.5 \times 5 \times 150^{1.5} \sqrt{3000}} = 0.234$$

$$\Delta_w = \frac{694 \times 72 \times .234}{10^6} = 0.0117''$$

TOTAL DEFLECTION OF DIAPHRAGM BETWEEN END WALLS

$$\Delta_D = \Delta_F + \Delta_w = 0.076 + 0.0117 = 0.088\ IN$$

DEFLECTION OF END WALL

$$\Delta = (0.1056/1000) \times 33.3 = 0.00352$$

DEFLECTION OF FRAME BEAM WITH RESPECT TO GROUND

$$\Delta_B = 0.088 + 0.0035 = 0.092$$

REQUIRED FRAME DEFLECTION

$$\Delta = (3R_w/8)\Delta_B = 3(6)/8 \times 0.092 = 0.207''$$

Figure D-7. Continued.

TRANSVERSE FRAMES (CONT.)

STIFFNESS OF FRAME

$I_{AB} = \frac{14 \times 12^3}{12} = 2020 \text{ IN}^4$

$K = \frac{2020}{15 \times 12} = 11.2$

FOR T-BEAM

$I_{BC} = \frac{2 \times 12 \times 20^3}{12} = 16{,}000 \text{ IN}^4$

$K = \frac{16{,}000}{23.08 \times 12} = 57.8$

$I_{CD} = \frac{36 \times 10^3}{12} = 3000 \text{ IN}^4$

$K = \frac{3000}{15 \times 12} = 16.7$

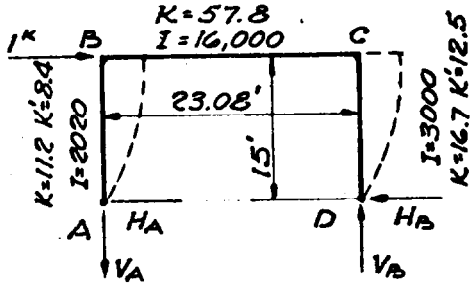

DEFLECTION OF FRAME FOR 1^K LOAD. FIXED JOINTS @ B & C

FIXED END MOMENTS OF COLUMNS $= \frac{-3EK\Delta}{L}$

JOINT	B		C	
	BA	BC	CB	CD
D.F.	.127	.873	.822	.178
F.E.M.	-.187			-.278
	+.024	+.163 +.114	+.229 +.081	+.049
	-.014	-.100 -.033	-.067 -.050	-.014
	+.004	+.029 +.020	+.041 +.014	+.009
	-.003	-.017 -.005	-.011 -.008	-.003
	-.001	+.004	+.007	+.001
	-.175EΔ			-.236EΔ

FIXED-END MOMENTS:

$M^F_{BA} = \frac{-3E\,11.2\,\Delta}{15 \times 12} = 0.187E\Delta$

$M^F_{CD} = \frac{-3E\,16.7\,\Delta}{15 \times 12} = 0.278E\Delta$

FINAL MOMENTS FOR $P = 1^K$:

$M_{BA} = 0.175E\Delta = 0.175 \times 438$
$= 76.7$ K-IN (6.39 K')

$M_{CD} = 0.236 \times 438$
$= 103$ K-IN (8.61 K')

Σ SHEARS $= 1^K - \frac{.175E\Delta}{15 \times 12} - \frac{.236E\Delta}{15 \times 12} = 0 \longrightarrow E\Delta = 438$

$\Delta = \frac{438}{3 \times 10^3} = 0.146''$

FRAME DEFORMATION COMPATIBILITY

FOR REQ'D FRAME DEFLECTION OF 0.207",

$M_{BA} = \frac{6.39 K'}{0.146 \text{ IN.}} \times 0.207 = 9.1 K'$

$M_{CD} = \frac{8.61}{0.146} \times 0.207 = 12.2 K'$

WHEN COMBINED WITH GRAVITY LOADS THE RESULTING STRESSES ARE WITHIN THE ELASTIC LIMIT; P-Δ IS SMALL. ∴ OK.

Figure D-7. Continued.

DESIGN EXAMPLE D-8

L-Shaped Building:

Description of Structure. A three-story L-shaped Administration Building in Zone 3 with bearing walls in concrete, using a series of interior vertical load-carrying column and girder bents. The structural concept is illustrated on Sheets *2, 3,* and *4.*

Construction outline.

Roof :
- Built-up, 5 ply.
- Metal decking with insulation board.
- Suspended ceiling.

2nd & 3rd Floors:
- Metal decking with concrete fill.
- Asphalt tile.
- Suspended ceiling.

1st Floor:
- Concrete slab-on-grade.

Exterior Walls:
- Bearing walls in concrete furred with GWB finish.

Partitions:
- Non-structural removable drywall.

Design Concept. Since the structure is without a complete load-carrying space frame, the R_w-factor is 6. The metal deck roof system forms a flexible diaphragm, therefore the roof loads are distributed to the shear walls by tributary area rather than by third story wall stiffnesses. The roof diaphragm, being flexible, will not transmit accidental torsion to the shear walls. The metal deck with concrete fill system for the floors form rigid diaphragms. The walls act as a-series of vertical cantilever beams connected together by struts at the floor lines. The wall analysis utilizes the Design Curve for Masonry and Concrete Shear Walls on Figure 6.4.

Loads.

Roof:

5-ply roofing	= 6.0 p.s.f.
1" insulation	= 1.5
Steel decks	= 2.3
Steel purlins	= 3.7
Steel girders and columns	= 1.2
Ceiling	= 10.0
Miscellaneous	= 1.0
Dead Load	= 25.7 p.s.f.
Add for seismic: Partitions	10.0
Total for seismic	= 35.7 p.s.f.

2nd & 3rd Floors:

Finish	= 1.0 p.s.f.
Steel deck	= 3.1
Concrete fill	= 32.0
Steel beams	= 5.9
Steel girders and columns	= 1.5
Partitions	= 20.0
Ceiling	= 10.0
Miscellaneous	= 1.0
Dead Load	= 74.5 p.s.f.
Live Load	= 50.0 p.s.f.

Figure D-8. L-shaped building.

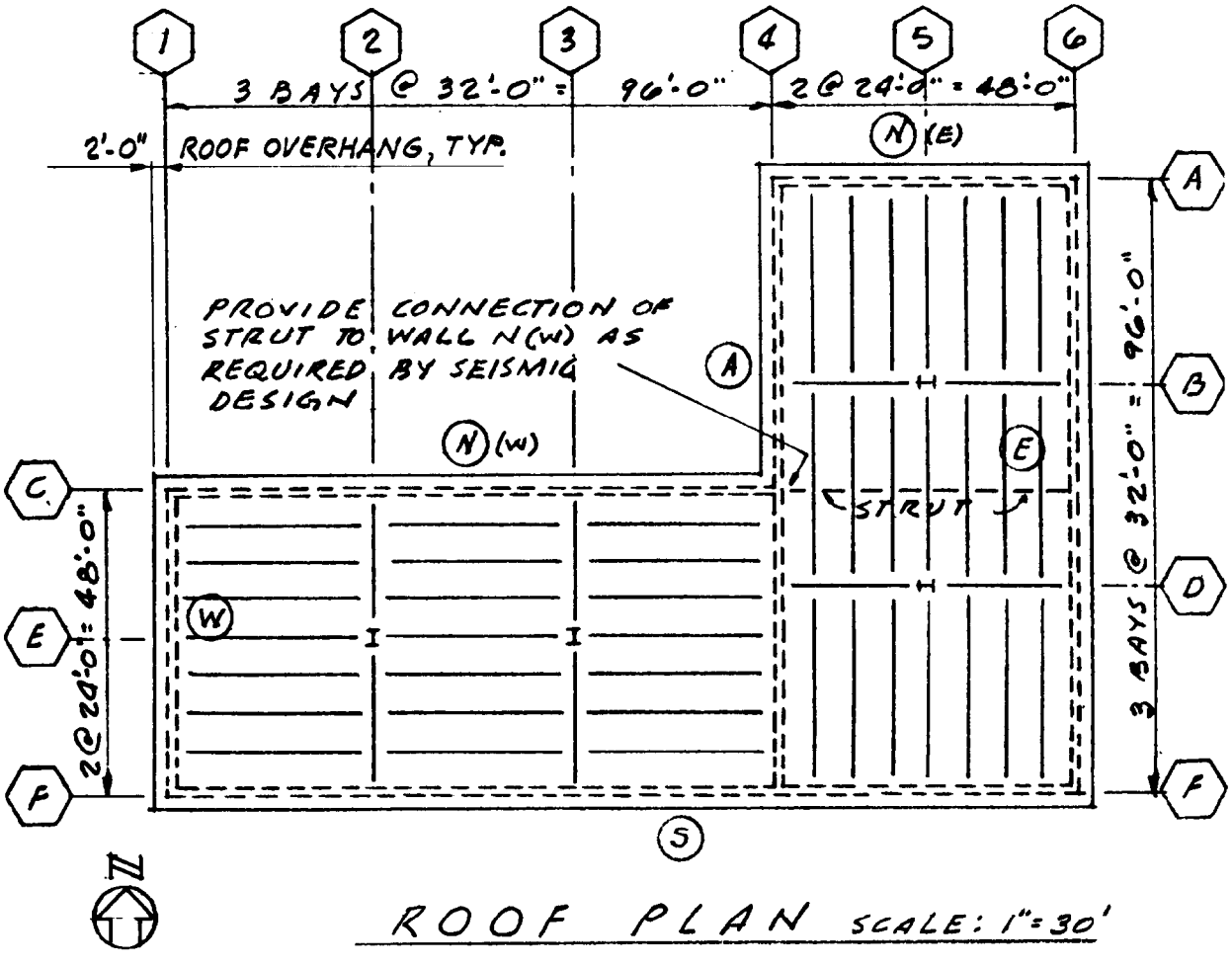

ROOF PLAN SCALE: 1" = 30'

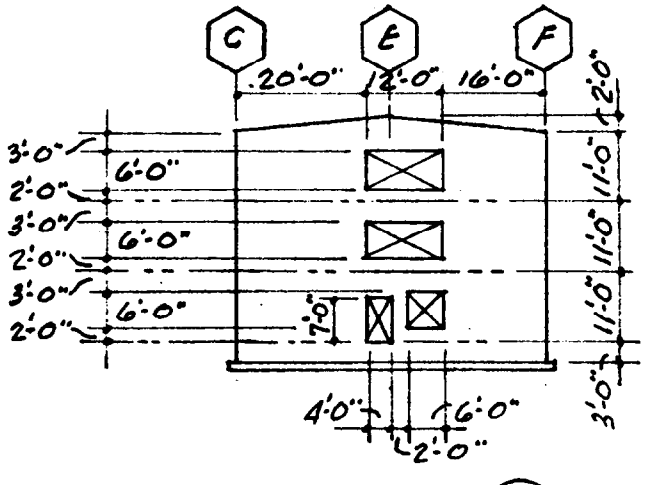

WALL (W)

NOTE:

WALL (N) (W) IS A SUPPORT FOR THE DIAPHRAGM EAST OF LINE 4 FOR E-W FORCES. THE STRUT ON LINE C IS DESIGNED FOR FORCES COLLECTED IN THE DIAPHRAGM. THE STRUT FORCE IS THEN TRANSFERRED TO THE WALL BY A SUITABLE CONNECTION AT THE LOCATION INDICATED.

Figure D-8. Continued.

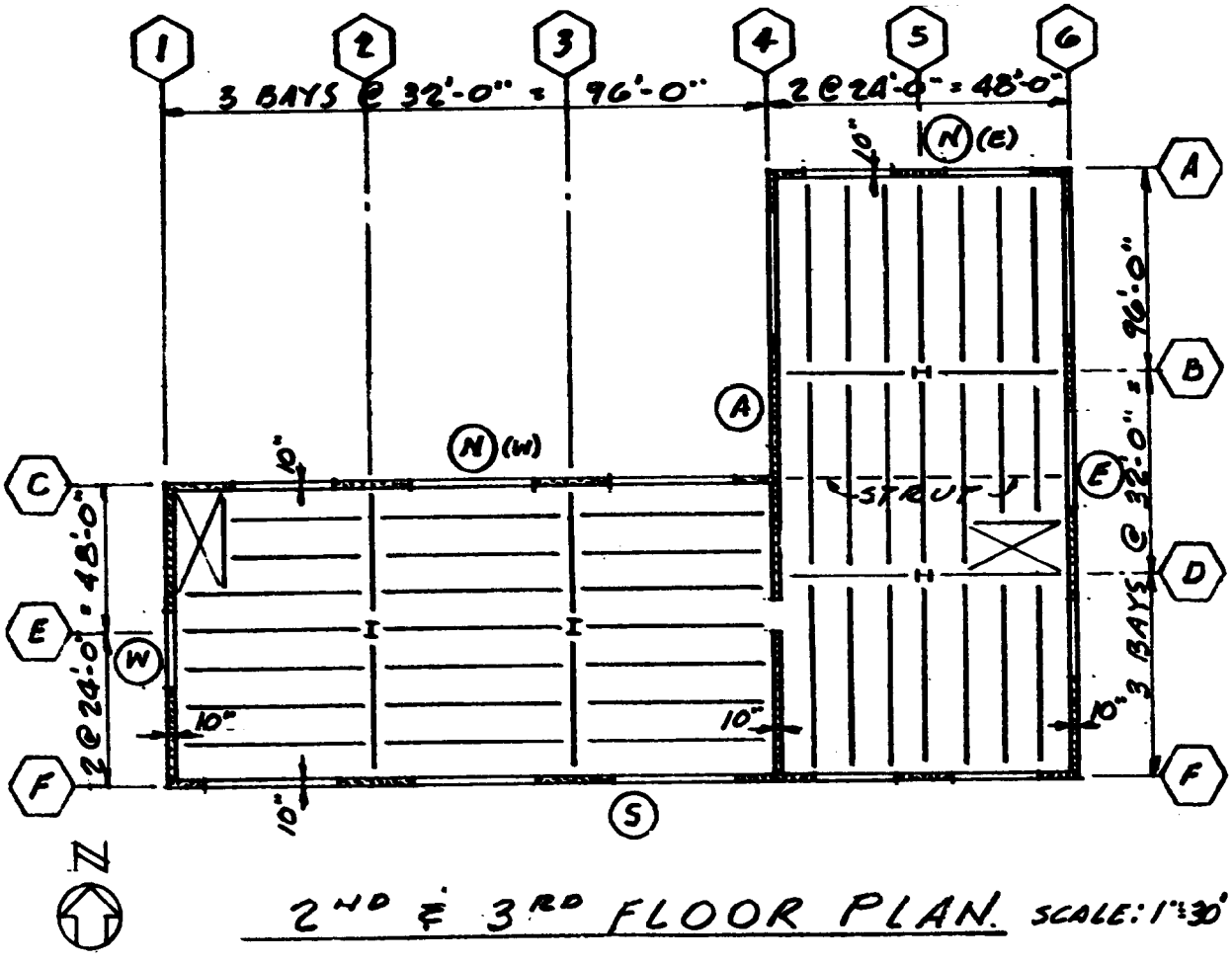

2ND & 3RD FLOOR PLAN. SCALE: 1"=30'

NOTE:

PROVIDE STRUT AND CONNECTION TO WALL ON LINE C SIMILAR TO ROOF.

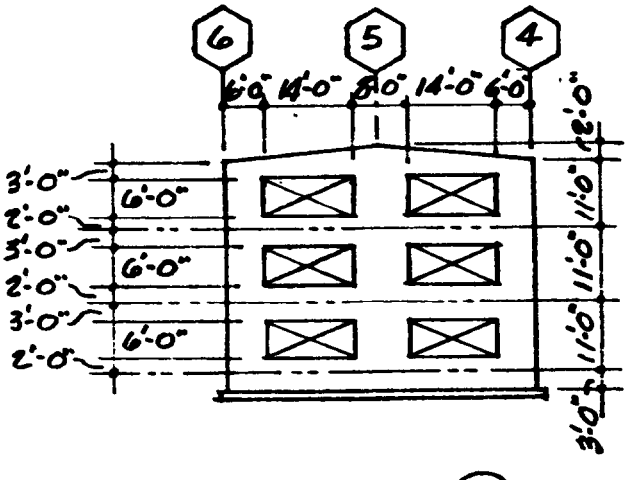

WALL (N) (E)

Figure D-8. Continued

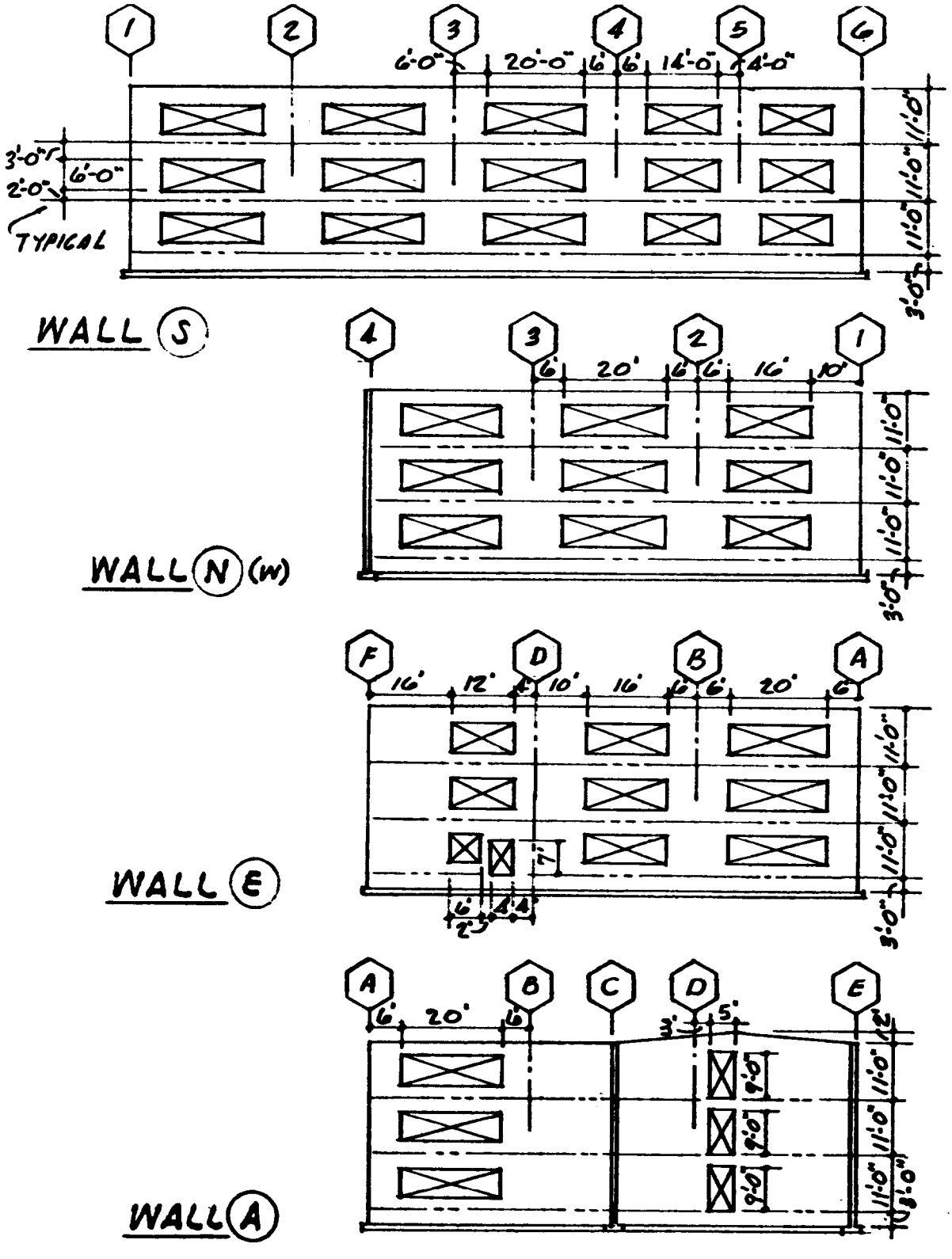

Figure D-8. Continued.

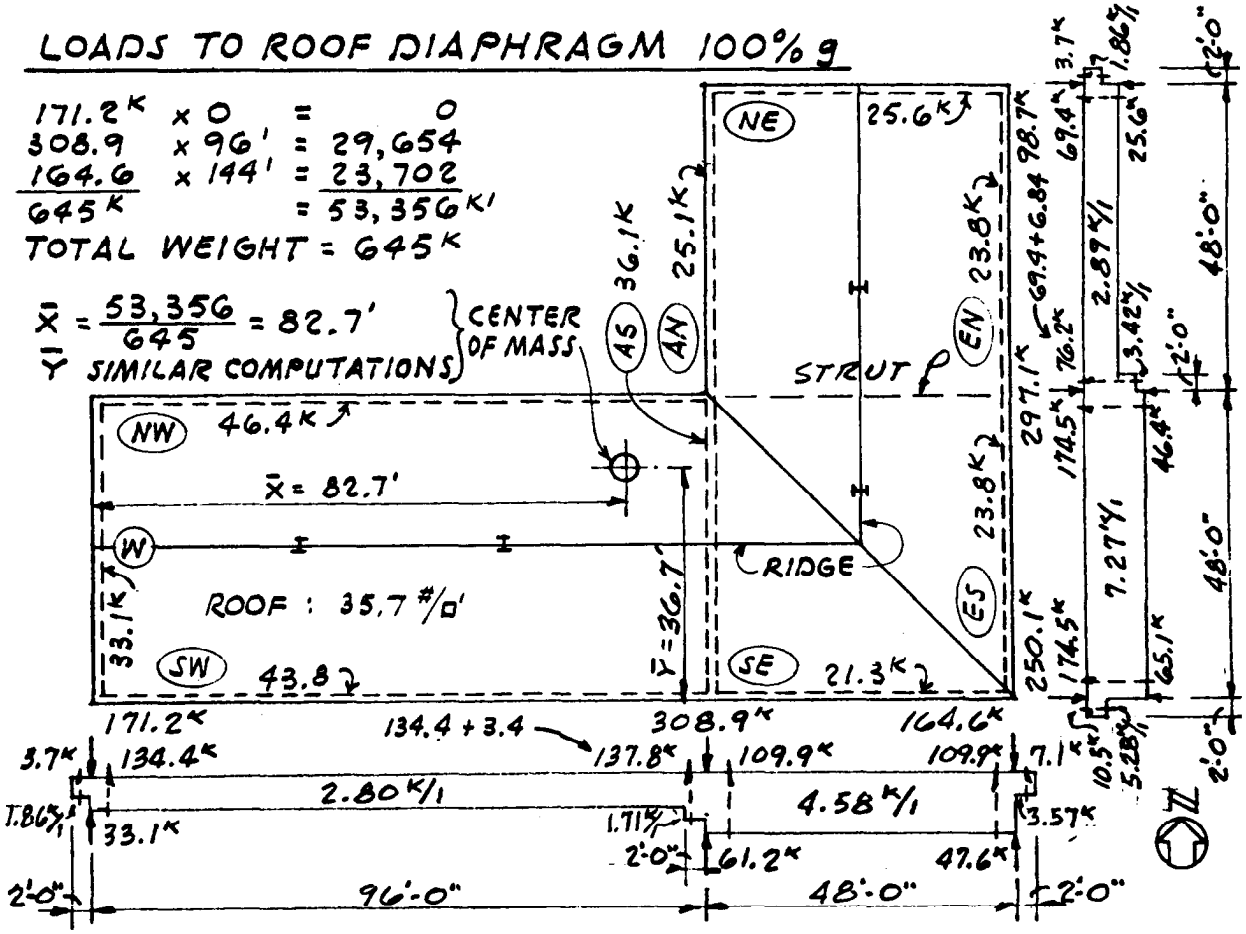

WALL	SOLID WT. #/'	% TOTAL AREA	NET WT. #/'	L'	W K	N-S WEST	N-S EAST	E-W SOUTH	E-W NORTH
NW	687	.71	488	95.17	46.4	488			
NE	813	.68	553	46.33	25.6		553		
SW	687	.67	460	95.17	43.8	460			
SE	687	.67	460	46.33	21.3		460		
W	813	.88	715	46.33	33.1			715	
EN	687	.73	502	47.17	23.8				502
ES	687	.73	502	47.17	23.8			502	
AN	687	.77	529	47.17	25.1				529
AS	813	.94	764	47.17	36.1			764	
				WALLS #/'		948	1013	1981	1031
				ROOF WIDTH		52'	100'	148'	52'
				ROOF WEIGHT #/'		1856	3570	5284	1856
				TOTAL #/'		2804	4583	7265	2887
				K/'		2.80	4.58	7.27	2.89

10" WALL WT.

125 #/□ x 6.5' = 813 #/' *

125 x 5.5' = 687 #/'

*GREATER HT. TO RIDGE

Figure D-8. Continued.

LOAD TO FLOOR DIAPHRAGM 100% 3RD FLR.

(2ND FLR. SIMILAR)

316 x 0 = 0
587 x 96 = 56,352
311 x 144 = 44,784
1214K 101,136

TOTAL WEIGHT = 1214K

$\bar{X} = \frac{101,136}{1214} = 83.3'$

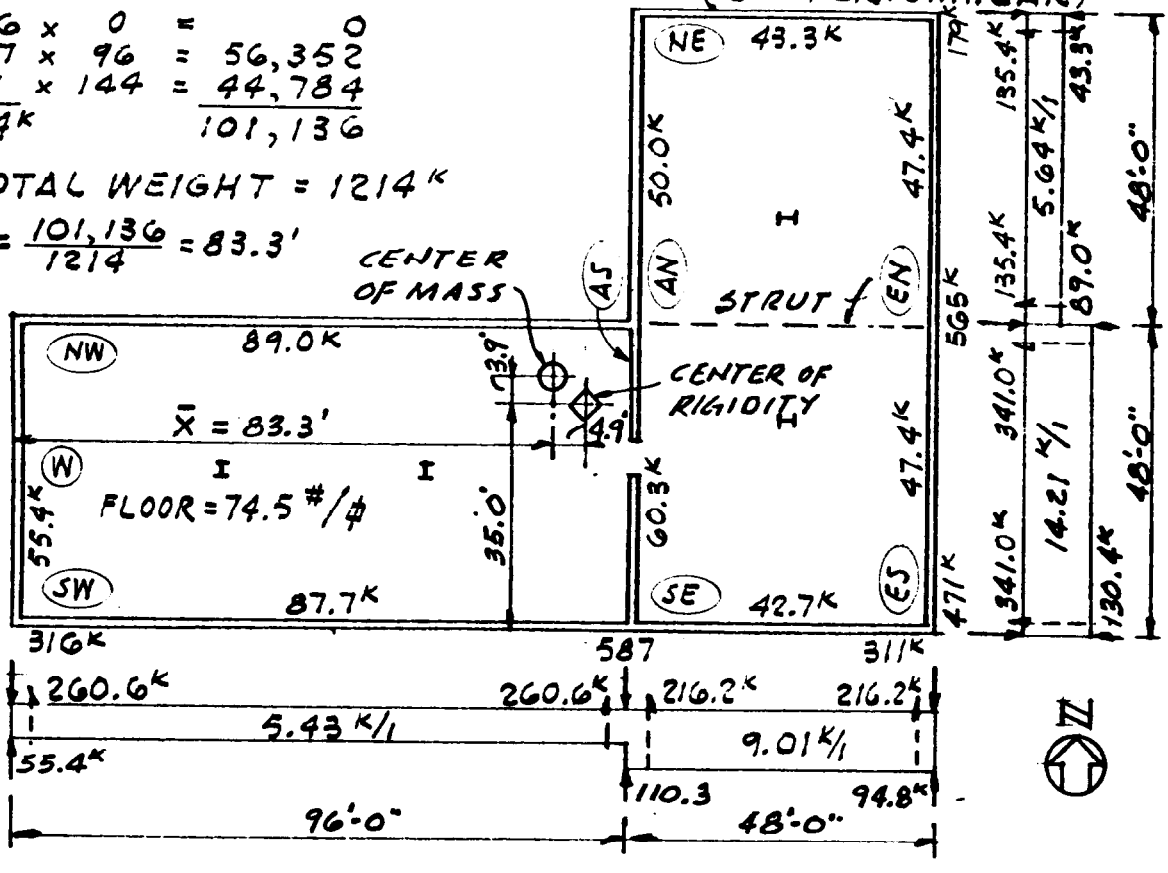

WALL	SOLID WT. #/1	%TOTAL AREA	NET WT. #/1	L'	W K	N-S WEST	N-S EAST	E-W SOUTH	E-W NORTH
NW	1375	.68	935	95.17	89.0	935			
NE	"	.68	935	46.33	43.3		935		
SW	"	.67	921	95.17	87.7	921			
SE	"	.67	921	46.33	42.7		921		
W	"	.87	1196	46.33	55.4			1196	
EN	"	.73	1004	47.17	47.4				1004
ES	"	.73	1004	47.17	47.4			1004	
AN	"	.77	1059	47.17	50.0				1059
AS	"	.93	1279	47.17	60.3			1279	
10" WALL WT. 125 #/□ x 11' = 1375 #/1				WALLS #/1		1856	1856	3479	2063
				FLOOR WIDTH		48'	96'	144'	48'
				FLOOR WEIGHT		3578	7152	10728	3576
				TOTAL #/1		5434	9008	14,207	5639
				K/1		5.43	9.01	14.21	5.64

Figure D-8. Continued.

LATERAL LOADS

$$V = \frac{ZIC}{R_W} W$$

$$Z = 0.3, \quad I = 1.0, \quad R_W = 6, \quad S = 1.5$$

$$T = 0.020\,(h_n)^{3/4}, \quad h_n = 34'$$

$$= 0.020\,(34)^{3/4} = 0.282 \text{ SEC}$$

$$C = \frac{1.25S}{T^{2/3}} = \frac{1.25 \times 1.5}{(0.282)^{2/3}} = 4.36; \quad USE = 2.75$$

$$V = \frac{0.3 \times 1.0 \times 2.75}{6} W = 0.138\,W, \quad \text{Say } 0.14\,W$$

NOTE: THIS BUILDING HAS PLAN IRREGULARITY TYPE B PER SEAOC TABLE 1F. THIS INVOKES SEAOC 1H2j(4) AND 1H2j(5). SEE 1H2j(4) FOR RESTRICTIONS ON ALLOWABLE STRESSES; 1H2j(5) WILL BE MET BY PROCEDURE SHOWN ON P. 8.

VERTICAL DISTRIBUTION OF LATERAL FORCES AND OVERTURNING MOMENTS

$$F_x = \frac{(V - F_t)\,w_x h_x}{\sum w_i h_i}; \quad \text{SINCE } T < 0.7 \text{ SEC.}, \; F_t = 0$$

$$F_x = V \frac{w_x h_x}{\sum w_i h_i}$$

	h_x	Δh	w_x	$w_x h_x$	$\frac{w_x h_x}{\sum w_x h_x}$	F_x	V_x	$V_x h = \Delta M_x$	M_V
ROOF	33	11	645	21285	.347	149	149	1639	
3RD FLR.	22	11	1214	26708	.435	187	336	3696	1639
2ND FLR.	11	11	1214	13354	.218	94	430	4730	5335
TOTAL	-	-	3073	61347	1.000	430^K			10065

$$V = 0.14 \times 3073 = 430^K$$

Figure D-8. Continued.

ROOF DIAPHRAGM

STORY FORCE = 149.5^K $\quad \frac{F}{W} = \frac{149.5}{645} = 0.232$

DIAPH. FORCE PER SEAOC I-11

$$F_{px} = \left(\frac{\Sigma F_i}{\Sigma w_i}\right) w_{px} = \frac{149.5}{645} w_{px} = 0.232\, w_{px}$$

$$\text{MAX } F_{px} = 0.75\, Z I\, w_{px} = (0.75 \times 0.3 \times 1.0)\, w_{px} = 0.225\, w_{px} \leftarrow \text{GOVERNS}$$

EAST-WEST EQ. MULT. LOAD DIAG., p.5, BY 0.225
$\Sigma R = 145.5^K$

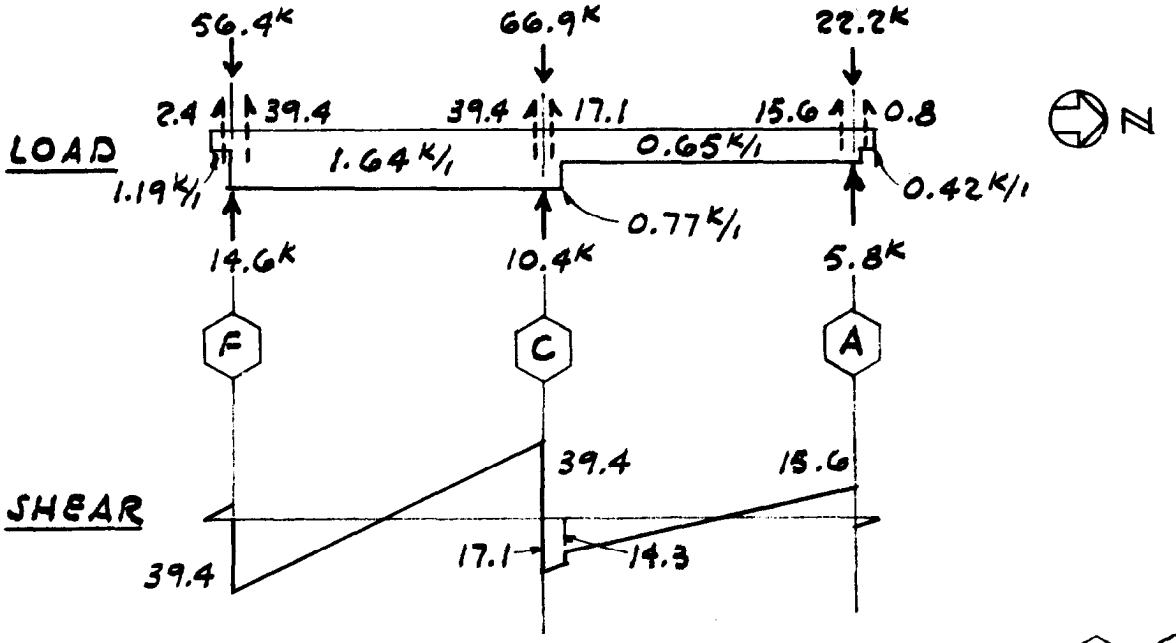

STRUT COLLECTS SHEAR FORCE BETWEEN LINES 4 & 6:

NORTH OF STRUT = V = 17.1 - 2(0.77) = 15.6
SOUTH OF STRUT = $V = \frac{48'}{144'} \times 39.4 = 13.1$
} 28.7^K

THE STRUT IS IN TENSION FOR EASTWARD FORCES, COMPRESSION FOR WESTWARD. SUITABLE CONNECTIONS MUST BE PROVIDED ACROSS EACH BEAM AS WELL AS AN END CONNECTION AT THE WALL.

NOTE: DIAPH. CALC. BECOMES MORE COMPLEX AT LOWER FLOORS BECAUSE THEY DISTRIBUTE FLOOR FORCES PLUS LOADS FROM SHEAR WALLS ABOVE ACCORDING TO RELATIVE RIGIDITIES OF SHEAR WALLS BELOW.

Figure D-8. Continued

APPENDIX E

DESIGN EXAMPLES—MECHANICAL AND ELECTRICAL EQUIPMENT

E-1. Introduction. The design examples in this appendix are to illustrate principles, factors, and concepts involved in seismic design. These are not mandatory; and other equivalent methods, materials, or details complying with this manual and applicable agency guide specifications may be used.

E-2. Design Examples:

Fig. No.	*Description of Design Examples*
E-1	*Pad-Mounted Transformer.* Illustrates the seismic design of a typical, rigidly mounted item of equipment on the ground.
E-2	*Cooling Tower in Building,* Presents analysis for a rigidly mounted cooling tower in a multi-story building.
E-3	*Unit Heater—Flexible Brace.* Analysis of a unit heater not rigidly braced.
E-4	*Unit Heater–Rigid Support.* Demonstrates the reduction of the lateral seismic load by rigidly bracing the unit heater of figure E-3.
E-5	*Water Heater.* Indicates how a water heater in a barracks is investigated for seismic loads.
E-6	*Tank on a Building.* Demonstrates the seismic analysis of a storage tank on a building. Emphasis is placed on the period determination.
E-7	*Water Riser.* Illustrates an approximate scheme used to determine the seismic loading on pipe connections. A riser in a multi-story building is treated.

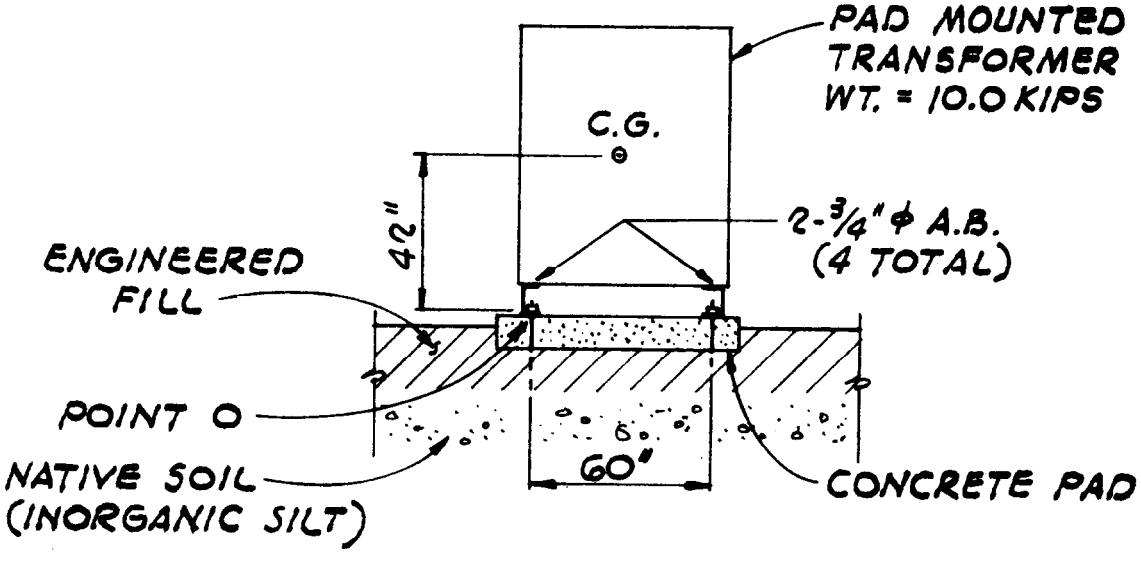

GIVEN: W = 10.0 KIPS
RIGID EQUIPMENT ON THE GROUND
ZONE 3 SEISMIC AREA AND I = 1.0

REQUIRED: CHECK ANCHOR BOLT REACTIONS DUE TO SEISMIC LOADS.

SOLUTION:

$$F_p = ZI\,(2/3\,C_p)\,W_p \qquad \text{(EQ 12-3)}$$

$Z = 0.30,\ I = 1.0,\ C_p = 0.75,\ W_p = 10.0$ KIPS

$F_p = 0.30\,(1.0)(2/3)(0.75)(10) = 1.5$ KIPS
APPLIED AT CG

SHEAR/BOLT = 1.5/4 = 0.38 KIPS/BOLT
ALLOW. SHEAR = 1.50 KIPS/BOLT
∴ 4-3/4" ϕ A.B. O.K.

CHECK OVERTURNING -
$\Sigma M_O = 0$
$42'' \times 1.5^K << \frac{60''}{2} \times 10.0^K$ ∴ OVERTURNING O.K.

Reference: Chapter 12, paragraph 12-5a

Also Check SEAOC 1I per SEAOC 1G 2d
Rigid Non-Building Structure
V = 0.5 ZIW (SEAOC EQ 1-12)
= 0.5 x 0.3 x 1 x 10 = 1.5 KIPS Same as Above

Figure E-1. Pad-mounted transformer.

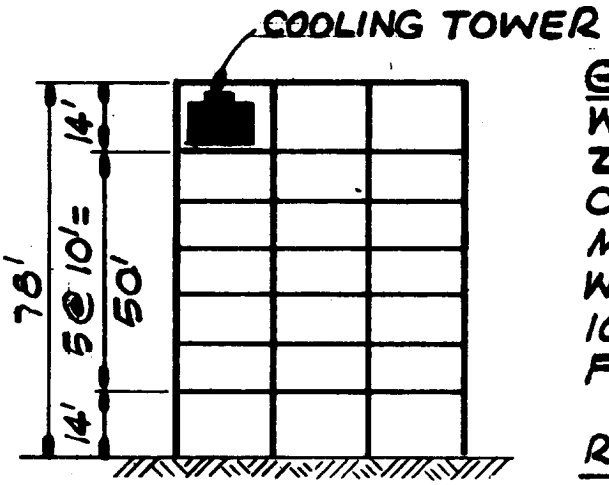

GIVEN:

WT. COOLING TOWER = 20.0 KIPS
ZONE 3 SEISMIC AREA
CONSIDER TOWER RIGIDLY MOUNTED
WT. TYP. FLOOR = 400 KIPS
100% MOMENT RESISTING FRAME. $I = 1.0$.

REQUIRED:

FIND THE SEISMIC DESIGN FORCE TO BE APPLIED AT C.G. OF COOLING TOWER.

SOLUTION:

CHECK MASS RATIOS (PARA. 12-2d)
W_p/w_x FLOOR $20/400 < 0.20$ O.K.
W_p/W STRUCT. $20/2800 < 0.10$ O.K.

QUALIFIES AS RIGID EQUIPMENT, RIGIDLY MOUNTED IN A BUILDING (PARA. 12-3).

$F_p = Z I_p C_p W_p$ (SEAOC EQ 1-10)

$Z = 0.30$ (ZONE 3), $I = 1.0$

$C_p = 0.75$ (SEAOC TABLE 1-H)

$F_p = 0.30 \times 1.0 \times 0.75 \times W_p = 0.225\, W_p$
$= 0.225 \times 20 = \underline{\underline{4.5 \text{ KIPS}}}$

Figure E–2. Cooling tower in building.

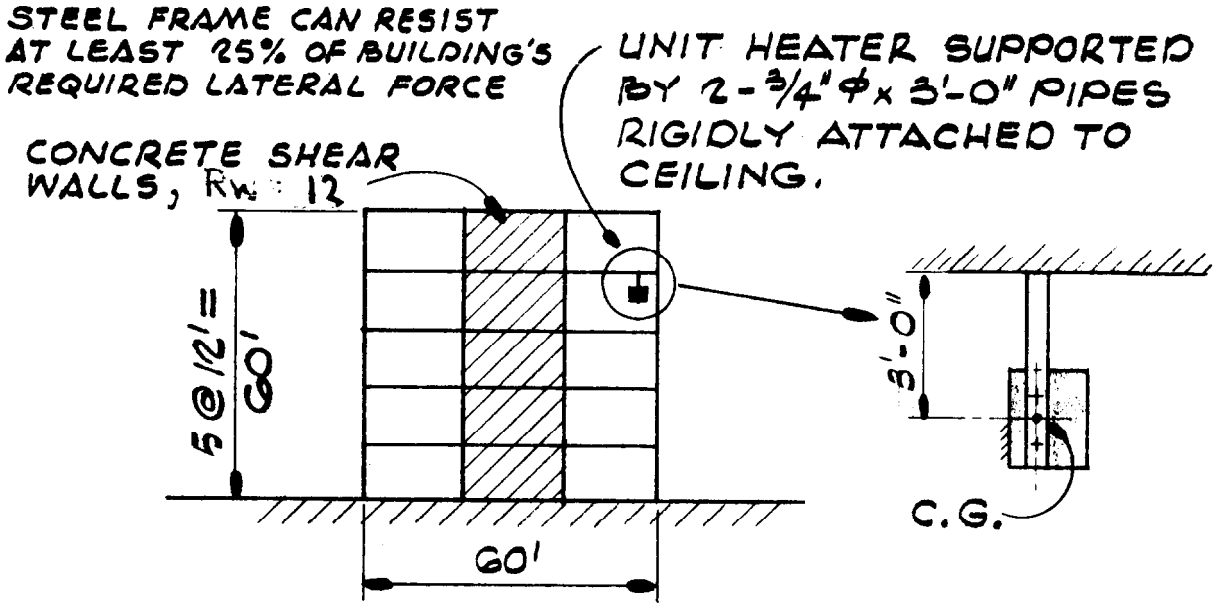

GIVEN: NEGLECT EFFECTS OF ROTATION OF UNIT HEATER.

W_p = WT. UNIT HEATER = 450 LBS
w_x = WT. TYPICAL FLOOR = 500 KIPS
W = WT. STRUCTURE = 2300 KIPS
I (OCCUPANCY) = 1.0
ZONE 3 SEISMIC AREA
I_o (3/4" φ PIPE) = 0.037 IN^4
E (PIPE) = 30×10^3 $KIPS/IN^2$

REQUIRED: FIND DESIGN SEISMIC FORCE TO BE APPLIED AT C.G. OF UNIT HEATER.

SOLUTION: CHECK MASS RATIOS: (PARA. 12-2d)

W_p/w_x FLOOR = 0.45/500 << 0.20 OK
W_p/W STRUCT. = 0.45/2300 << 0.10 OK

INVESTIGATE AS FLEXIBLY MOUNTED EQUIPMENT IN BUILDINGS PARA. 12-4

$$F_p = Z I_p A_p C_p W_p \qquad \text{(EQ 12-3)}$$

Figure E-3. Unit heater–flexible brace.

$Z = .30$ (ZONE 3), $I = 1.0$, $C_p = 0.75$

A_p, WHICH RANGES FROM 1.0 TO 5.0 IS DEPENDENT ON PERIODS T_a (EQUIP.) AND T (BLDG.)

REFER TO PARA. 12-4c

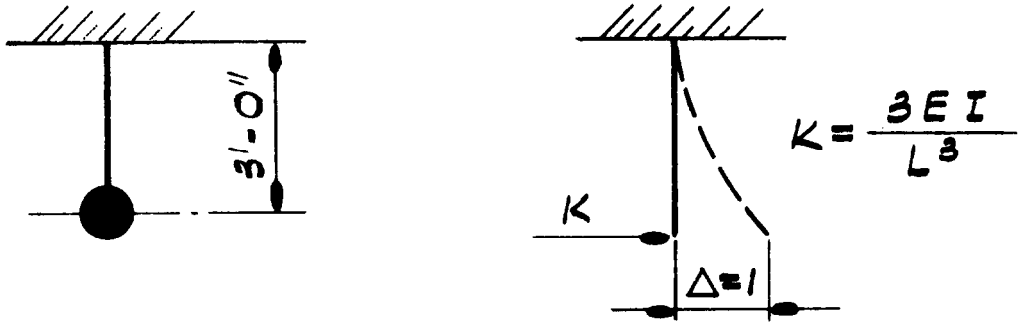

$$k = 2\left\{\frac{3(30\times10^3)(0.037)}{36^3}\right\} = 0.142 \text{ KIPS/INCH.}$$

$$T_a = 0.32\sqrt{\frac{W_p}{k}} = 0.32\sqrt{\frac{.35}{.142}} = 0.50 \text{ SEC.} \qquad (10\text{-}1)$$

T = 0.6 SEC. (FROM ANALYSIS OF BUILDING, SEAOC EQ 1-5 AND PARA 12-4c (1))

$$\frac{T_a}{T} = \frac{0.50}{0.60} = 0.83$$

USE FIGURE 12-3b: $A_p = 4.90$ (TABLE 12-1)

$$F_p = 1.0 \times 4.9 \times 0.75\, W_p = 1.10\, W_p$$
$$= 1.10 \times 350 = \underline{\underline{386 \text{ LBS.}}}$$

NOTE: A LATERAL FORCE OF 386 LBS. WILL OVERSTRESS THE ¾"φ PIPE BRACES; THEREFORE ADD DIAGONAL SUPPORTS

Figure E-3. Continued.

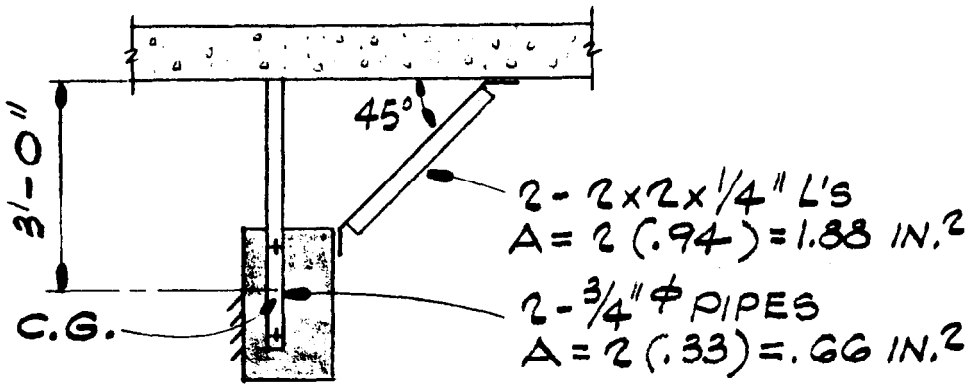

DETAIL OF UNIT HEATER

GIVEN : USE DATA GIVEN IN FIGURE E-3

REQUIRED : FIND DESIGN SEISMIC FORCE

SOLUTION : $F_p = Z I_p C_p W_p$ (SEAOC EQ 1-10 IF RIGIDLY MOUNTED, PARA. 12 · 3)

CALCULATION OF T_a FOR RIGIDITY CHECK:

APPROXIMATE ANGLE CONNECTIONS BY PINS. ASSUME ALL LATERAL FORCE IS RESISTED BY BRACING ANGLES. USE ENERGY METHOD TO CALC. K_2.

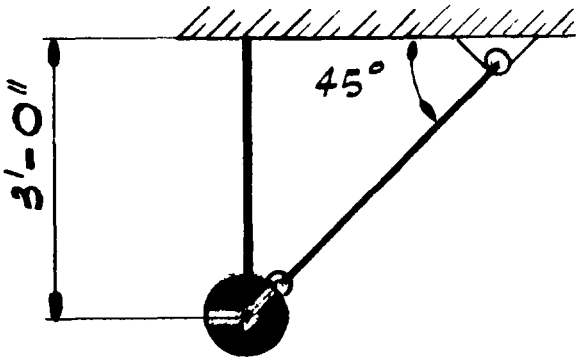

Figure E-4. Unit heater-rigid support.

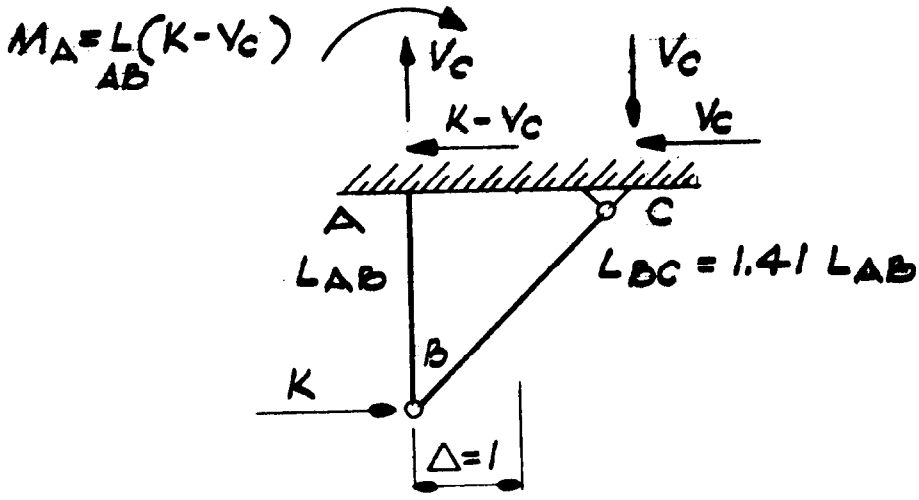

ASSUME $K - V_C \doteq 0$: THIS ASSUMES ALL OF THE HORIZONTAL FORCE K IS RESISTED BY THE DIAGONAL.

$$\Sigma W_{\text{EXTERNAL}} = \Sigma W_{\text{INTERNAL}}$$

$$K\left(\frac{\Delta}{2}\right) = \frac{K^2 L_{AB}}{2 A_{AB} E} + \frac{(1.41K)^2 L_{BC}}{2 A_{BC} E}$$

$$1 = K\left(\frac{L_{AB}}{A_{AB} E} + \frac{1.41^3 L_{AB}}{A_{BC} E}\right)$$

$$K = \frac{30 \times 10^6}{\left(\frac{36}{0.66} + \frac{1.41^3 (36)}{1.88}\right)} = 2.78 \times 10^5 \text{ LBS/INCH}$$

$$T_a = 0.32 \sqrt{\frac{350}{2.78 \times 10^5}} = 0.011 \text{ SEC.} \qquad \text{(EQ 12-1)}$$

$T_a < 0.06$ SEC., THEREFORE SUPPORT IS RIGID (PARA. 12-3)

$$F_p = Z I_p C_p W_p = 0.30 \times 1.0 \times 0.75\ W_p = 0.225\ W_p$$
$$= 0.225 \times 350 = \underline{\underline{79 \text{ LBS.}}}$$

Figure E-4. Continued.

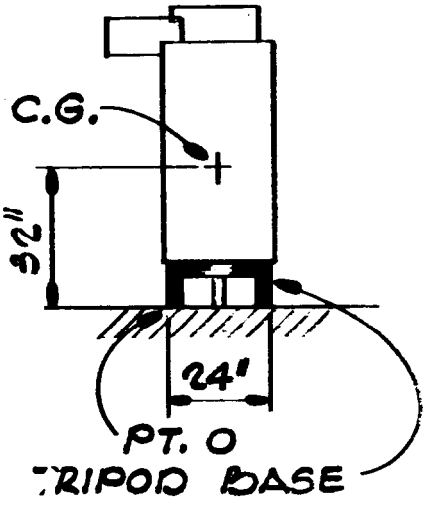

GIVEN: 1445 LB. WATER HEATER IN BARRACKS, SEISMIC ZONE 4.

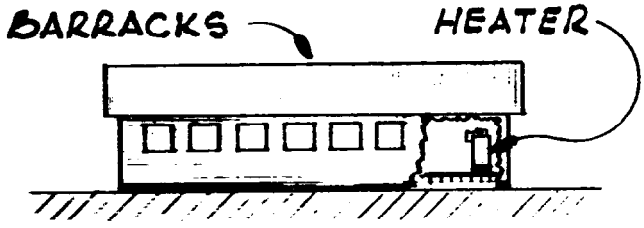

REQUIRED: INVESTIGATE THE WATER HEATER FOR SEISMIC LOADS.

SOLUTION: WATER HEATER WILL BE CLASSIFIED AS BEING EQUIPMENT ON THE GROUND AND WILL BE CONSIDERED TO BE A RIGID BODY. SINCE FRICTION CANNOT BE USED TO RESIST LATERAL SEISMIC FORCES, THE WATER HEATER MUST BE RIGIDLY ATTACHED TO ITS FOUNDATION. BOLT WATER HEATER LEGS TO FLOOR.

$F_p = ZI\,(2/3\ C_p)\ W_p$

$Z = 0.4,\ I = 1.0,\ C_p = 0.75$ (SEAOC TABLE 1-H)

$F_p = 0.4 \times 1.0 \times 2/3 \times 0.75 = 0.20 W_p$

$F_p = 0.20 W_p = 0.20 \times 1.445 = 0.29$ KIPS

$F_p = 0.29K$ APPLIED AT C.G.

CHECK FOR OVERTURNING ABOUT POINT O.

$\Sigma M_{x-x} = 0$

$0.29^K \times 32'' < 1.445^K \times \text{TAN } 30° \times 12''$

$9.28''^K < 10.0''^K$

OVERTURNING O.K.

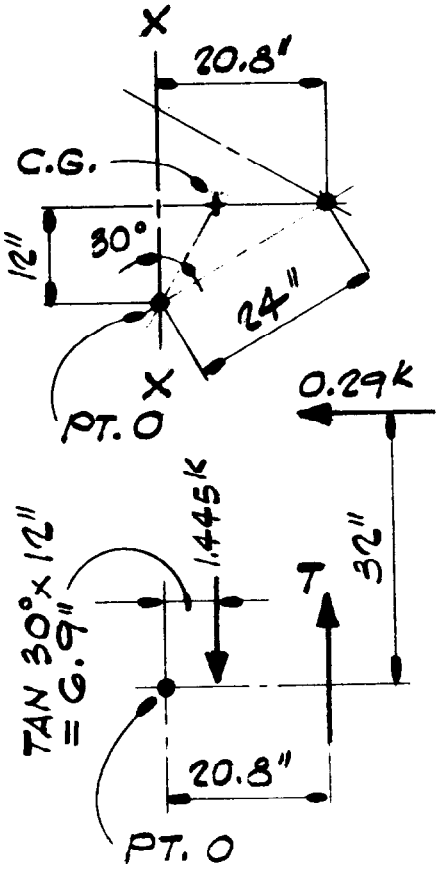

CHECK FOR LOAD T IN LEG OF TRIPOD.

$\Sigma M_{x-x} = 0 = T \times 20.8 + 0.29 \times 32 - 1.445^K \times \text{TAN } 30° \times 12''$

$T = \dfrac{-9.28''^K + 10.0''^K}{20.8''} = 0.035$ KIPS COMPRESSION

HENCE, USE NOMINAL ANCHOR BOLTS. USE 3-5/8" ϕ A.B.

ALLOW BASE SHEAR = $3(1.0^K) = 3K$

SHEAR O.K. $3.0K \gg 0.29K$

Note: SAME RESULTS IF CONSIDERED NON-BUILDING STRUCTURE V = 0.5 ZIW (SEAOC EQ 1-12)

Figure E–5. Continued.

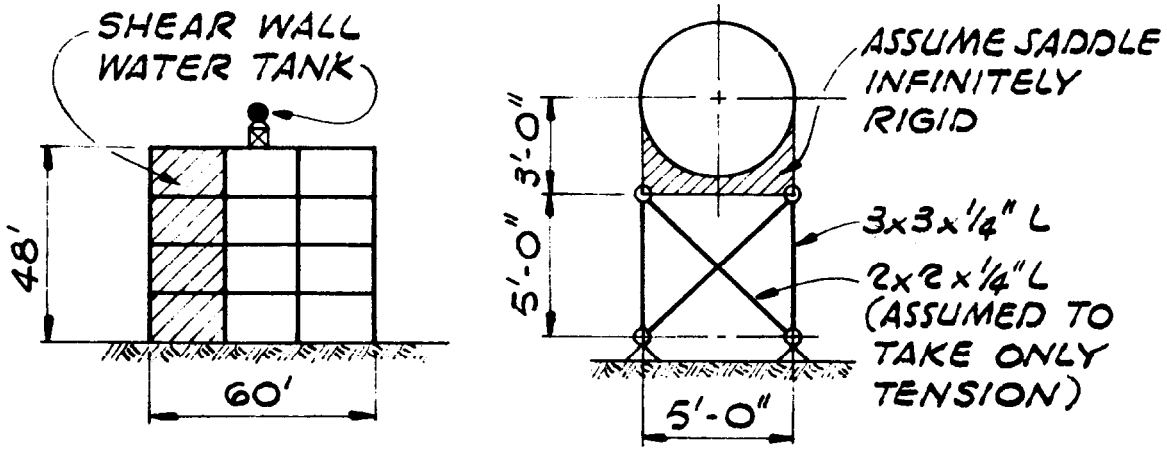

DETAIL OF TANK SUPPORT

GIVEN: WT. OF TANK + WATER = 10.0 K/ TRUSS

ZONE 2A SEISMIC AREA AND I = 1.0 OCCUPANCY
ASSUME ALL JOINTS ARE PIN CONNECTIONS.
ASSUME CROSS MEMBERS TAKE TENSION ONLY.
NEGLECT WT. OF SUPPORT MEMBERS.

REQUIRED: FIND THE DESIGN SEISMIC FORCE.

SOLUTION: HYDRO-DYNAMIC EFFECTS ARE NEGLECTED EVEN WHEN TANK IS PARTIALLY FULL. CALCULATION OF STIFFNESS OF TANK STRUCTURE: USE ENERGY METHOD TO FIND K.

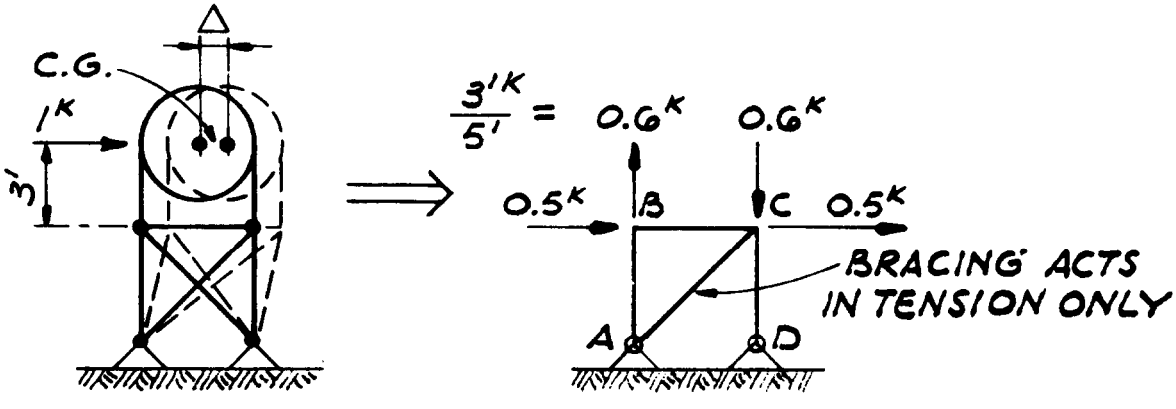

Figure E–6. Tank on a building.

COMPUTATION OF Δ : $1^K \cdot \frac{\Delta}{2} = \Sigma \frac{F^2 L}{2AE}$

MEMBER	LENGTH	AREA	F	F^2L/A
AB	5.00 FT.	1.44 IN.^{2}	+ .6 K	1.25
CD	5.00	1.44	− 1.6	8.89
CA	7.07	0.94	+ 1.414	15.03
				25.17

$$\therefore 1^K \times \left(\frac{\Delta}{2}\right) = \frac{25.17 \ \frac{K^2\text{-FT.}}{IN^2} \times 12 \ IN/FT}{2(30 \times 10^3 \ K/IN^2)} = 0.5025 \times 10^{-2} \ IN.\text{-}K$$

$$\Delta = 1.005 \times 10^{-2} \ IN./K$$

$$K = \frac{1}{\Delta} = \frac{1}{1.005 \times 10^{-2}} = 99.5 \ K/IN.$$

$$\therefore T_a = .32 \sqrt{\frac{W}{K}} = .32 \sqrt{\frac{10}{99.5}} = .102 \ SEC.$$

(EQ 12-1)

T_a (EQUIPMENT PERIOD) = 0.102 > 0.06 SEC.
SUPPORT IS NOT RIGID (PARA. 12-3)
DESIGN AS FLEXIBLY MOUNTED (PARA. 12-4)

T (BLDG. PERIOD) IS CALCULATED TO BE 0.31 SEC.
REFER TO PARA. 12-4c(1)
T_a/T = 0.102/0.31 = 0.33 AND T < 0.5 SEC.
FIND A_p FROM FIGURE 12-3a

$$A_p = 1 + \left(\frac{0.33 - 0.10}{0.80 - 0.10}\right)(5.0 - 1.0) = 2.31$$

$F_p = ZIA_pC_pW_p$, WHERE Z = 0.15 (ZONE 2A)
(PARA. 12-4e, FORMULA 12-2) I = 1.0
C_p = 0.75

$F_p = 0.15 \times 1.0 \times 2.31 \times 0.75 \ W_p = 0.26 \ W_p$

$F_p = 0.26 \times 10 = \underline{\underline{2.6 \ KIPS/TRUSS}}$

Figure E-6. Continued.

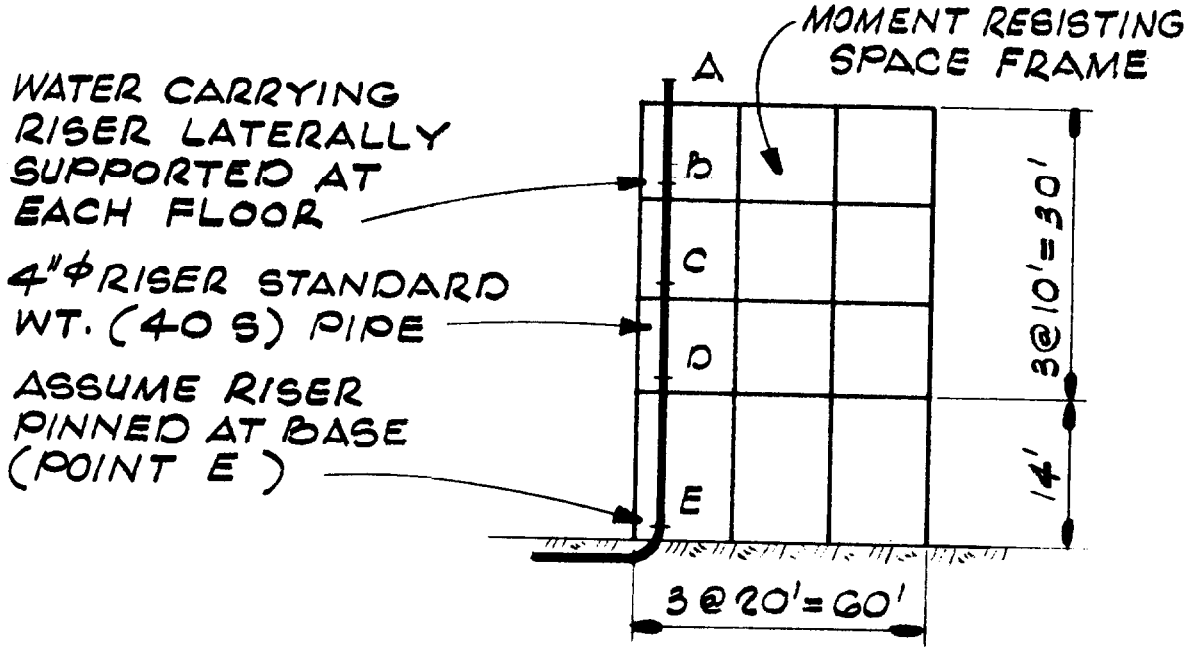

GIVEN: RISER AS SHOWN IN MULTI-STORY BUILDING. SEISMIC ZONE 4
ESSENTIAL FACILITY BUT THE RISER IS NOT RELATED TO FIRE PROTECTION

REQUIRED: FIND SEISMIC FORCE AT EACH LATERAL RISER SUPPORT.

SOLUTION: AN APPROXIMATE SOLUTION WILL BE MADE.
FIRST INVESTIGATE THE ALLOWABLE SPAN FOR 4"Φ (40 S) PIPE, THEN APPLY SEISMIC LOADING TO RISER.

1. IF PIPING SYSTEM IS RIGID
$F_p = Z I_p C_p W_p$ [PARA. 12-7d (2)]
2. IF PIPING SYSTEM IS NOT RIGID
$F_p = Z I_p A_p C_p W_p$ [PARA. 12-7d (3) & (4)]

Figure E-7. Water riser.

PIPE	APPROXIMATE END COND.	MAXIMUM RIGID SPANS (FIG. 12-4, 12-5 & 12-6)
A B	FIXED - PINNED	14'-6"
B C	FIXED - FIXED	17'-8"
C D	FIXED - FIXED	17'-8"
D E	FIXED - PINNED	14'-6"

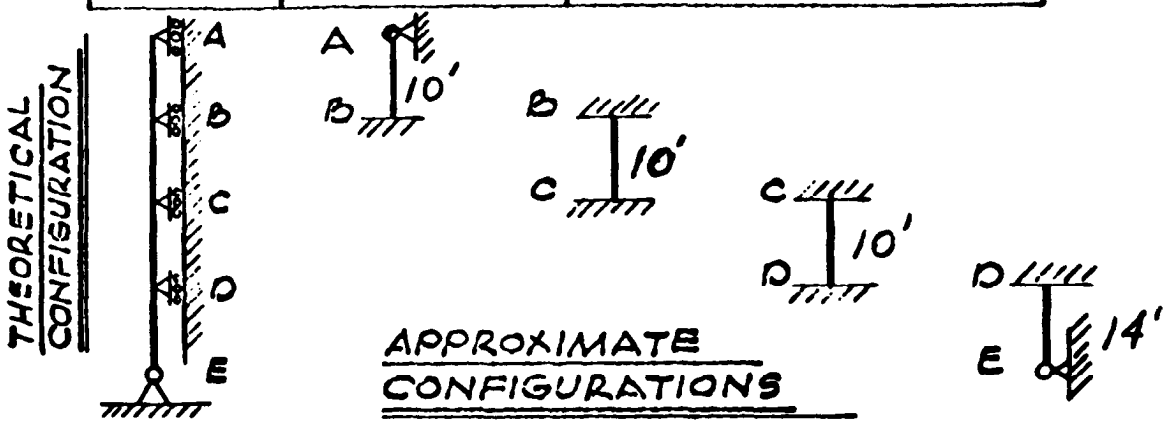

PIPE SPANS ARE SHORTER THAN MAXIMUM RIGID SPAN LIMIT; ∴ $F_p = Z I C_p W_p$ APPLIES.

$Z = 0.4$ (ZONE 4) $I_p = I = 1.25$; $C_p = 0.75$

W_p = (WT. OF PIPE + CONTENTS) = (10.8 + 5.5) LB/FT × LENGTH

$F_p = 0.40 \times 1.25 \times 0.75\, W_p = 0.38\, W_p = 6.1$ LB/FT.

POINT	APPROXIMATE TRIBUTARY LENGTH (FT.)	APPROXIMATE CONNECTION LOAD (LBS)
A	5.0	31
B	10.0	61
C	10.0	61
D	12.0	73
E	7.0	43

Figure E-7. Continued

APPENDIX F

DESIGN EXAMPLES—NONBUILDING STRUCTURES

F-1. Introduction. The design examples in this appendix are to illustrate principles, factors, and concepts involved in seismic design. These are not mandatory; and other equivalent methods, materials, or details complying with this manual and applicable agency guide specifications may be used.

F-2. Design Examples—

Fig. No.	*Description of Design Examples*
F-1	*Elevated Tank (Braced Frame).* Four-legged, diagonal braced tower.
F-2	*Vertical Tank (On Ground).* Vertical water tank supported directly by the ground.
F-3	*Horizontal Tank (On Ground).* Typical horizontal tank supported on saddles.
F-4	*Pole-Mounted Transformer.* Equipment supported by a non-building pole structure.
F-5	*Tower-Mounted Equipment.* Tower-supported equipment is investigated for lateral seismic loads. The tower period is computed.

DESIGN EXAMPLE : F-1

ELEVATED TANK (BRACED FRAME) :

Description of Structure. A 90,000 gallon steel water tank on top of a 114.5 foot high steel braced frame.

Lateral Loads.

$V = (ZIC/R_w)\ W$ (SEAOC EQ 1-1)

where $Z = 0.3$ (Zone 3)

$I = 1.0$

$R_w = 3$ (SEAOC TABLE 1-I)

$S = 1.5$ (Soil type S_3, SEAOC TABLE 1-B)

$T = 1.37$ (See Sheet 2)

$C = 1.25\ S/T2/3 = 1.52$

$v = (0.3 \times 1.0 \times).52/3)\ W = 0.15\ W$

MINIMUM $C/R_w = 0.50$, $V = 0.15W$ (SEAOC 11 5a)

Figure F-1. Elevated tank (braced frame).

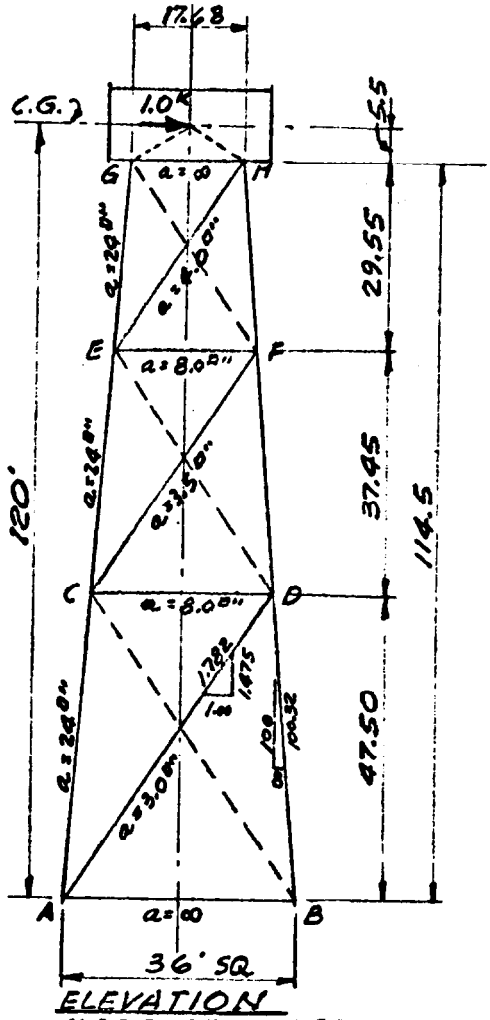

ELEVATION

SLOPE OF DIAGONALS IN PLANE OF SIDE

DEFLECTION Δ*

MEMBER	LENGTH	AREA	u	u²L/A
A B	36.0	∞	+.134	0
A D	57.5'	3.0"	+.474	4.30
A C	47.8'	24.0	+1.283	3.27
B D	47.8'	24.0	-1.678	5.60
C D	28.4'	8.0	-.296	.31
C F	45.3'	3.5	+.598	4.62
C E	37.7'	24.0	+.787	.97
D F	37.7'	24.0	-1.283	2.58
E F	22.4'	8.0	-.374	.39
E H	35.8'	4.0	+.758	5.14
E G	29.7'	24.0	+.156	.03
F H	29.7'	24.0	-.787	.77
G H	17.68'	∞	-.487	0
				27.98

90,000 GALLON WATER TANK

WEIGHT OF WATER 750K
STEEL TANK (EST) 72
WATER + TANK 822K = W

NEGLECT WT. OF TOWER

ASSUME BRACES CARRY TENSION ONLY.

COMPUTE THE PERIOD OF THE STRUCTURE TO DETERMINE COEFFICIENTS C AND S

$T = 0.32\sqrt{\frac{W}{K}}$ (EQ 12-1)

W = 822K

K = SPRING CONSTANT (KIPS/INCH)

IF A 1.0K LATERAL LOAD IS APPLIED AT THE TANK C.G.,

$K = \frac{1.0}{\Delta}$

WHERE Δ = LATERAL DEFLECTION OF TANK DUE TO 1K LOAD.

$T = 0.32\sqrt{W \times \Delta}$

$\Delta = \frac{2^{*} \times 27.98 \times 12}{30{,}000} = 0.0224$ IN

FOR 1K LOAD ON TOWER (0.5K EACH SIDE)

$T = 0.32\sqrt{822 \times 0.0224}$

$= 1.37$ SEC

*0.5K APPLIED TO EACH SIDE OF TOWER. FOR 1.0K ON THE WHOLE TOWER:

$\Sigma \frac{u^2 L}{A} = 2 \times 27.98$

$\Delta = \Sigma \frac{u^2 L}{AE}$ IN/KIP

Figure F–1. Continued.

V = 0.15 W (SHEET 1 OF 3)

= 0.15 x 822 = 123.3 KIPS.

STRESS IN MEMBERS FOR LOAD APPLIED PARALLEL TO MAJOR AXIS. V=123.3^k

MEMBER		DIRECT LOAD STRESS	ECCEN. LOAD STRESS	TOTAL STRESS	UNIT STRESS
AB	+.134 x 123.3^k	+ 16.5^k	+ 0.8^k	+ 17.3^k	—
AD	+.474	+ 58.5	+ 2.9	+ 61.4	20.5 ^{k}/□"
AC	+1.283	+ 158.2	0.	+ 158.2	6.6
BD	-1.678	- 207	0.	- 207	8.63
CD	-.296	- 36.5	- 1.8	- 38.3	4.79
CF	+.598	+ 73.7	+ 3.7	+ 77.4	22.1
CE	+.787	+ 97.1	0.	+ 97.1	4.05
DF	-1.283	- 158.2	0.	- 158.2	6.6
EF	-.374	- 46.2	- 2.3	- 48.5	6.06
EH	+.758	+ 93.4	+ 4.7	+ 98.1	24.5
EG	+.156	+ 19.2	0.	+ 19.2	0.80
FH	-.787	- 97.1	0.	- 97.1	4.05
GH	-.487	- 60.1	- 3.0	- 63.1	—

STRESSES DUE TO 5% ECCENTRICITY

M_T = .05 x 36 x 123.3 = 222^k

SHEAR ON EA. OF 4 SIDES = $\frac{222}{4 \times 18}$ = 3.08^k

STRESS IN WEB MEMBERS = $\frac{3.08}{(123.3/2)}$ x (DIRECT LOAD STRESS)

STRESS IN COLUMNS = 0

CHECK COLUMN FORCES AND UPLIFT FOR LOAD APPLIED AT 45° TO MAJOR AXIS OF TOWER

$$P = \frac{123.3 \times 120}{1.414 \times 36} \times 1.007 = \pm\ 293 \text{ KIPS}$$

(NOTE: FORCE IN BD x $\sqrt{2}$ = 207 x 1.414 = 293)

GRAVITY FORCE ON COLUMNS = 822^k ÷ 4 = -206 KIPS

COLUMN DESIGN: -293 - 206 = -499 KIPS (COMPR.)

UPLIFT: +293 - 0.85(206)* = 118 KIPS (UPLIFT)

DESIGN ANCHOR BOLTS AND FOUNDATION FOR 118 KIPS UPLIFT FORCE

*REFER TO. SEAOC 1H1b

Figure F–1. Continued.

DESIGN EXAMPLE: F-2

VERTICAL TANK (ON GROUND)

Description of Structure. A cylindrical water tank on grade with a radius of 10 feet (R = 10), a height of 12 feet (hr = 12), and a water depth of 10 feet (h = 10). The tank is located in Seismic Zone 4 and I = 1.0. The weight of the tank is 20 kips.

Required. The period of the sloshing water, the maximum vertical displacement of the water (d_{max}), and the design seismic forces.
Refer to Chapter 13, paragraph 13-4.

Figure F-2. Vertical tank (on ground).

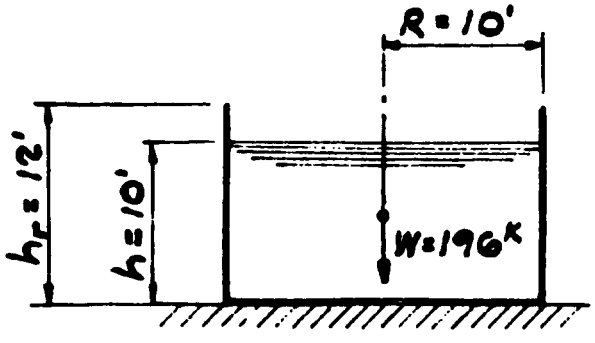

REFER TO FIGURES 13-1 AND 13-2 FOR SEISMIC FORCE DISTRIBUTION

GENERAL

$Z = 0.4$, SEISMIC ZONE 4
$I = 1.0$
$R_w = 4$ (SEAOC TABLE 1-I)
$C = 1.25\ S/T^{2/3} \leq 2.75$ SEAOC EQ 1.2
$S = 1.5$ (NOT KNOWN, SEAOC TABLE 1-B)
$\alpha = h/R = 10.0/10.0 = 1.0$
$W(\text{WATER}) = \pi (10)^2 (10)(0.0624) = 196^K$
$W_r(\text{ROOF}) = 0$ (NO ROOF)
$W_w(\text{TANK WALLS}) = 20^K$

Figure F–2. Continued.

RIGID BODY FORCES [PARA. 13-4a(1)]

$V_{RB} = ZIC/R_w\,(W_r + W_W + W_I)$ (13-1)

$C = 2.75$

$ZIC/R_w = 0.4 \times 1.0 \times 2.75/4 = 0.28$

$W_I = 0.54W$ (FOR $\alpha = 1.0$) (TABLE 13-1)

$= 0.54 \times 196 = 106^K$

$V_{RB} = 0.28\,(0 + 20 + 106) = \underline{35.3^K}$

$h_I = 0.38h$ (TABLE 13-2)

$= 0.38 \times 10 = 3.8$ FT.

$h_I' = 0.80h$ (TABLE 13-2)

$= 0.80 \times 10 = 8.0$ FT

M_{RB} (TANK SHELL) $= ZIC/R_w\,[W_r h_r + W_W \bar{h}_W + W_I h_I]$ (13-2)

$= 0.28\left[0 + 20\left(\frac{12}{2}\right) + 106(3.8)\right]$

$= \underline{146^{K\text{-}FT}}$

M_{RB} (BELOW BASE) $= 0.28\left[0 + 20\left(\frac{12}{2}\right) + 106(8.0)\right]$

$= \underline{271^{K\text{-}FT}}$

Figure F-2. Continued.

SLOSHING WATER FORCE [PARA. 13-4a (2)]

PERIOD, $T = k_T\sqrt{h}$ (13-4)

$k_T = 0.84$ (TABLE 13-3)

$T = 0.84\sqrt{10} = \underline{\underline{2.66 \text{ SEC.}}}$

$V_{SL} = (ZIC/R_W)W_C$ (13-3)

$C = 1.25\ S/T^{2/3} = 0.97$

$S = 1.5$ (MAXIMUM VALUE)

$ZIC/R_W = 0.4 \times 1 \times 0.97 \times 1/4 = 0.097$

$W_C = 0.43W$ (TABLE 13-1)

$= 0.43 \times 196 = 84.3^K$

$V_{SL} = 0.097 \times 84.3 = \underline{8.2^K}$

$h_c = 0.60h = 0.60 \times 10 = 6.0$ FT. (TABLE 13-2)

$h_c' = 0.79h = 0.79 \times 10 = 7.9$ FT.

M_{SL} (TANK SHELL) $= (ZIC/R_W)W_C h_c$ (13-5)

$= 0.097 \times 84.3 \times 6.0$

$= \underline{49.1 \text{ K-FT}}$

M_{SL} (BELOW BASE) $= 0.097 \times 84.3 \times 7.9$

$= \underline{64.6^{K\text{-}FT}}$

Figure F–2. Continued.

HEIGHT OF SLOSHING WATER

$$d_{MAX} = \left[\frac{0.75\,(ZIC/R_w)}{1-k_d(ZIC/R_w)}\right]R \qquad (13\text{-}6)$$

$$= \left[\frac{0.75\,(0.097)}{1-(1.75)(0.097)}\right]10.0 \qquad (k_d \text{ FROM TABLE 13-4})$$

$$= \underline{\underline{0.88 \text{ FT.}}} \quad (\text{LESS THAN } h_r - h = 2 \text{ FT, OK})$$

TOTAL DESIGN FORCES [PARA. 13-4a(3)]

$$V_{TOTAL} = \sqrt{V_{RB}^2 + V_{SL}^2} \qquad (13\text{-}8)$$

$$= \sqrt{(35.3)^2 + (8.2)^2} = \underline{\underline{36.2^K}}$$

$$M_{TOTAL} = \sqrt{M_{RB}^2 + M_{SL}^2} \qquad (13\text{-}9)$$

FOR TANK SHELL $= \sqrt{146^2 + 49.1} = \underline{\underline{154^{K\cdot FT}}}$

FOR BELOW BASE $= \sqrt{271^2 + 64.6^2} = \underline{\underline{279^{K\cdot FT}}}$

Figure F–2. Continued.

DESIGN EXAMPLE: F-3

HORIZONTAL TANK [ON GROUND):

Description of Structure. A 20,000 gallon steel tank in concrete saddles on a concrete slab on grade. Seismic Zone 2A, I = 1.0, S = 1.5 For this rigid structure T < 0.3 sec.

Lateral Loads:

$$V = \frac{ZIC}{R_w} W$$

where Z = 0.15, I = 1.0, R_w = 4, S = 1.5
C = 2.75 (Table 4-1)
w = Weight of Tank plus contents.

$$v = \frac{0.15(1.0)(2.75)}{4} W$$

$$= 0.10\ w > 0.075\ w \quad \text{(OK)}$$

[MINIMUM C/R_w = 0.5; V = 0.15 x 0.5W = 0.075W (SEAOC 115a)]

Figure F-3. Horizontal tank (on ground).

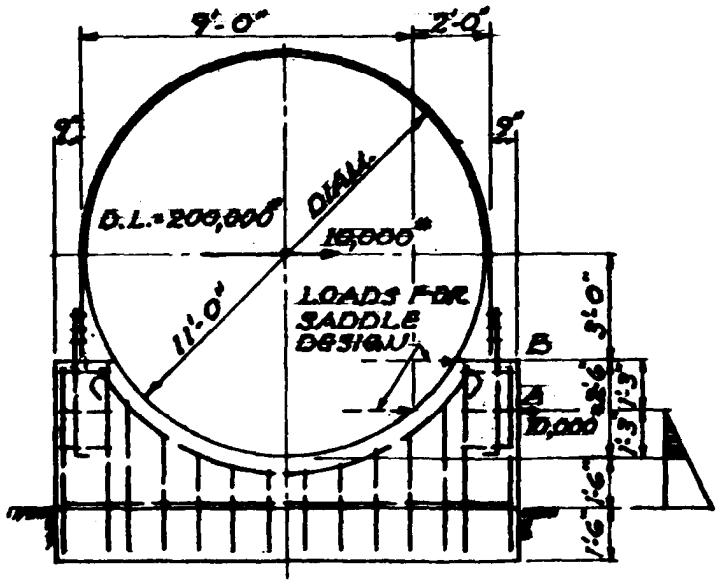

20,000 GALLON TANK
11'-0" DIAM. x 28'-0" LONG
WEIGHT TANK PLUS
CONTENTS 200,000 LBS.
SEISMIC LATERAL FORCE
V = 0.10 W
= 0.10 x 200,000
= 20,000 LB.
OR 10,000 LB. EA. SADDLE

STRAP DESIGN:

FOR THE PURPOSE OF THIS EXAMPLE ASSUME THE REACTION IS AT LEVEL "A" AND NEGLECT WEIGHT OF TANK AND CONTENTS.

M = 10000 x 4.25 = 42,500'#

STRESS = 42,500/9.0 = 4,720# IN STRAP.

SADDLE DESIGN

FOR REINFORCEMENT ASSUME THE LOAD ON THE PIER TO BE APPLIED AT LEVEL "B"

MOMENT WITH LOAD APPLIED AT LEVEL B

M = 10,000 x 2.5 = 25,000'# DESIGN REINF. TO RESIST THIS BENDING MOMENT IN ACCORDANCE WITH STANDARD PROCEDURE.

BASE DESIGN

TOTAL O.T.M. = 20,000 x 8.5 = 170,000'#

BASE 12'-6" x 24'-0" A = 12.5 x 24 = 300□'

SECTION MODULUS $S = \frac{24 \times (12.5)^2}{6} = 625$

EA. SADDLE = 5880# x 2 = 11,760#

BASE WEIGHT = 225 x 300 = 67,500#

+200,000

279,260# TOTAL WEIGHT

$\frac{P}{A} = \frac{279,260}{300} = 930.87 \quad \frac{M}{S} = \frac{170,000}{625} = 272$

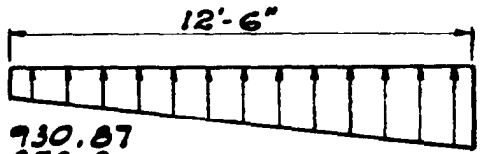

930.87
+272.0
1202.87#/□'

930.87
-272.0
658.87#/□'

RESULTANT IS IN MIDDLE THIRD

Figure F-3. Continued

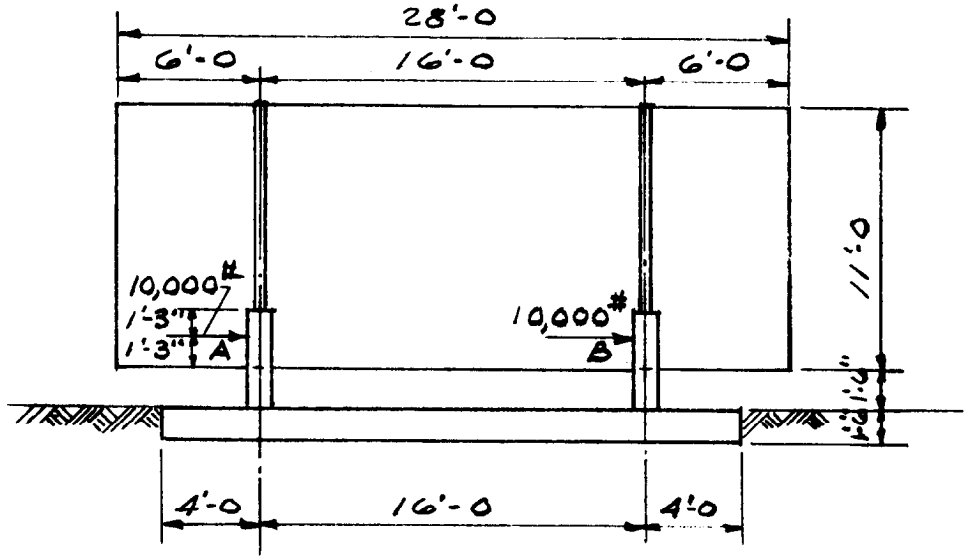

OVERTURNING ON SUPPORT IS NEGLIGIBLE AND IS NOT INCLUDED IN THIS CALCULATION

SADDLE DESIGN

$M_A = M_B$ ABOUT BASE OF TANK = 10,000 × 1.25 = 12,500 '#

ABOUT FOOTING = 10,000 × 2.75 = 27,500 '#

DESIGN REINF. TO RESIST THESE BENDING MOMENTS IN ACCORDANCE WITH STANDARD PROCEDURE

BASE DESIGN

DESIGN REINF. IN FOOTING IN ACCORDANCE WITH STANDARD PROCEDURE TO RESIST SADDLE M = 27,500 '#

TOTAL O.T.M. = 20,000 × 8.5 = 170,000 '#

SECTION MODULUS $S = \frac{12.5 \times (24)^2}{6} = 1200$

$\frac{P}{A} = 930.87$ (FROM SHEET 2 OF 3) $\frac{M}{S} = \frac{170,000}{1200} = 142$

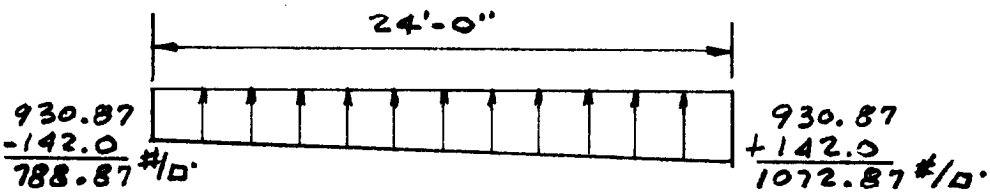

RESULTANT IS IN MIDDLE THIRD
DESIGN FOOTING FOR SOIL PRESSURES SHOWN IN ACCORDANCE WITH STANDARD PROCEDURE.

Figure F-3. Continued

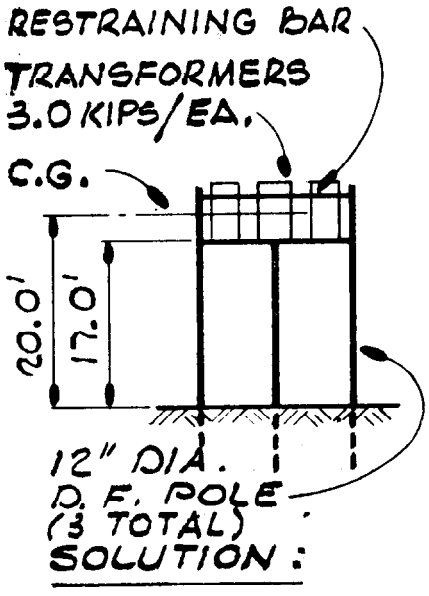

GIVEN:

WT. TRANSFORMERS = 3.0 KIPS/EA.
WT. POLES ═══ 35 LB/FT./POLE
E (POLES) ═══ 1.6×10^6 LB/IN.^{2}
SOIL PROPERTIES ARE UNKNOWN
ASSUME EACH POLE ACTS AS A 20' LONG CANTILEVER
SEISMIC ZONE 3 OCCUPANCY CATEGORY 1 (ESSENTIAL FACILITY).

REQUIRED:

FIND THE SEISMIC FORCE COEFFICIENT FOR THE WEAK AXIS OF THE POLE FRAME. (I.E., NORMAL TO THE PAPER.)

SOLUTION:

CLASSIFY AS A NON-BUILDING STRUCTURE.

$$T = 0.32\sqrt{\frac{W}{k}} \qquad \text{(EQ 12-1)}$$

$$W = 3000 + \frac{35 \times 20}{2} = 3{,}350 \text{ LB/POLE}$$

CALCULATION OF k:

$$I_o \text{ (ONE POLE)} = .785R^4 = .785(6)^4 = 1017 \text{ IN.}^4$$

$$\Delta = \frac{PL^3}{3EI_o} \quad \text{OR} \quad k = \frac{3EI_o}{L^3} = \frac{3(1.6 \times 10^6)(1017)}{(20 \times 12)^3}$$

$$= 353 \text{ LBS/IN.}$$

$$\therefore T = 0.32\sqrt{\frac{3350}{353}} = 0.99 \text{ SEC.}$$

$V = (ZIC/R_w)W$ (SEAOC EQ 1-1)
$Z = 0.30$ (ZONE 3)
$I = 1.25$ (ESSENTIAL FACILITY)
$R = 3$ (INVERTED PENDULUM) SEAOC TABLE 1-I
$C = 1.88$ (TABLE 4-1 FOR $T = 1.0$ SEC)
$C/R_w = 1.88/3 = 0.63 > 0.50$ (SEAOC 115a)
$V = (0.30 \times 1.25 \times 1.88/3)W = \underline{\underline{0.236W}}$

Figure F-4 Pole-mounted transformer.

GIVEN:

MISSILE TRACKING DEVICE SITUATED ON TRUSS TOWER: SEISMIC ZONE 2B
ESSENTIAL FACILITY
SITE TYPE S_3

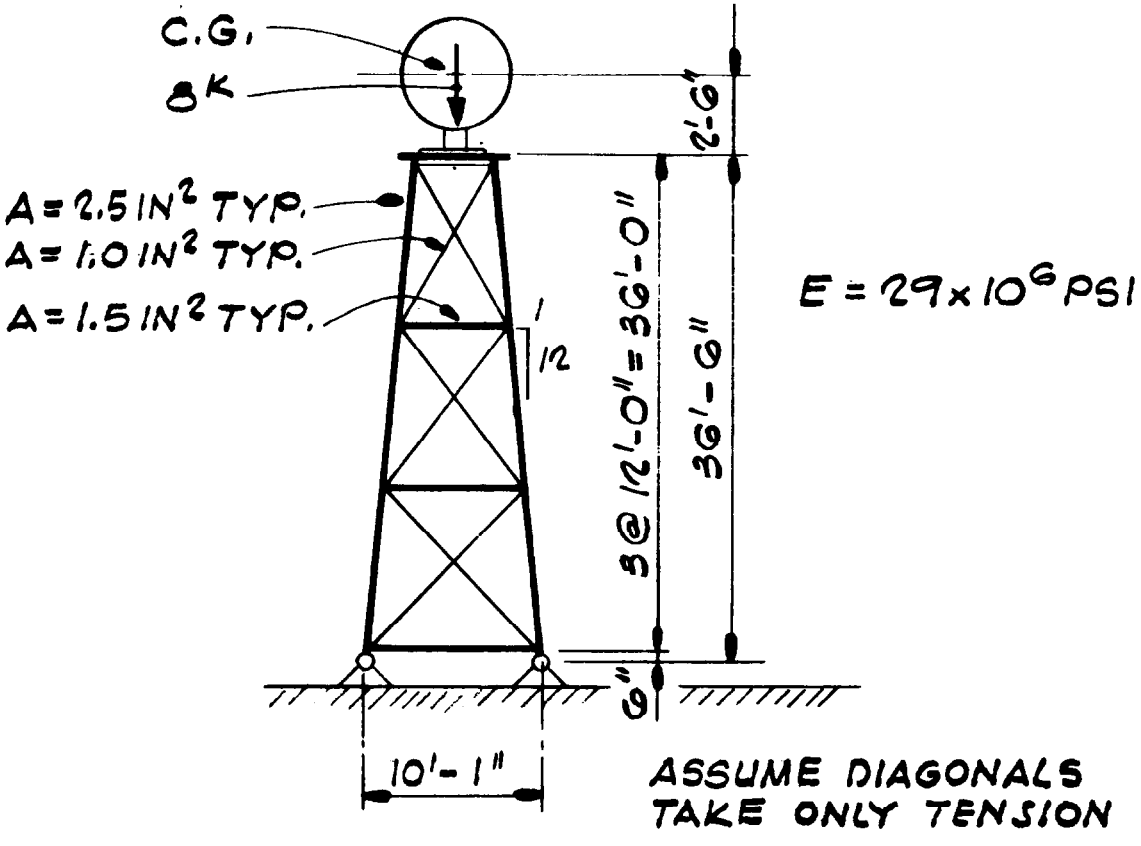

REQUIRED:

FIND THE LATERAL SEISMIC FORCE TO BE APPLIED AT THE CENTER OF GRAVITY OF THE TRACKING DEVICE. CLASSIFY AS RIGID EQUIPMENT ON A STRUCTURE OTHER THAN A BUILDING.

Figure F–5. Tower-mounted equipment.

SOLUTION :

MEMBER	P FORCE (KIPS)	L (IN.)	A (IN.^{2})	$\frac{P^2L}{A}$
AB	1.00	48	∞	0
AC	0	145	2.5	0
AD	0	156	1.0	0
BC	+2.17	156	1.0	734.6
BD	-2.02	145	2.5	236.2
CD	-0.67	72	1.5	21.5
CE	+2.02	145	2.5	236.6
CF	0	167	1.0	0
DE	+1.16	167	1.0	224.7
DF	-3.02	145	2.5	529.0
EF	-0.50	96	1.5	16.0
EG	+3.02	145	2.5	529.0
EH	0	180	1.0	0
FG	+0.75	180	1.0	101.8
FH	-3.63	145	2.5	764.3
GH	+0.30	120	1.5	7.2

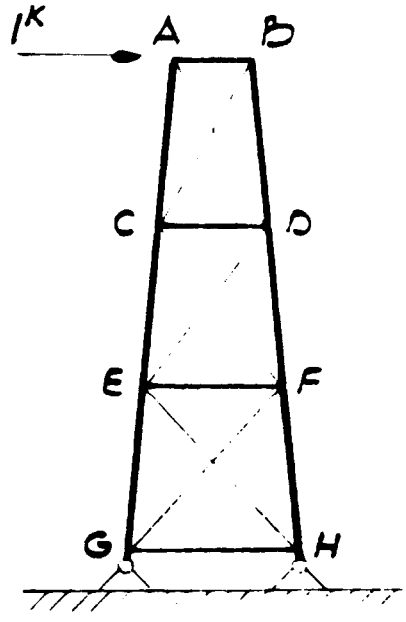

NOTE: PT. H IS ASSUMED TO TAKE NO BASE SHEAR AS MEMBER EH CARRIES NO LOAD.

$$1^K \cdot \frac{\Delta}{2} = \sum \frac{P^2L}{2AE} \; ; \; \sum \frac{P^2L}{A} = 3401.3 \; K^2/IN.$$

$$\sum \frac{P^2L}{AE} = 1.17 \times 10^{-1} = 0.117 \text{ INCHES/KIP}$$

$$\left(\frac{1}{\Delta}\right) = k \quad k = 8.55 \text{ KIPS/IN. PER SIDE}$$

$$T = 0.32\sqrt{\frac{W}{k}} = 0.32\sqrt{\frac{8.0}{2(8.55)}} = 0.22 \text{ SEC (EQ 12-1)}$$

$Z = 0.20$ (ZONE 2B), $I = 1.25$ (ESSENTIAL FACILITY)

$R_w = 3.0$ (INVERTED PENDULUM), $C = 2.75$ (TABLE 4-1)

$V = (ZIC/R_w)W = (0.20 \times 1.25 \times 2.75/3)W = 0.23 \times 8 = 1.84$ KIPS

NOTE: WEIGHT OF TOWER WAS NEGLECTED.

Figure F–5. Continued.

The proponent agency of this publication is the Office of the Chief of Engineers, United States Army. Users are invited to send comments and suggested improvements on DA Form 2028 (Recommended Changes to Publications and Blank Forms) direct to HQUSACE (CEMP-ET), WASH DC 20314-1000.

By order of the Secretaries of the Army, the Navy and the Air Force:

GORDON R. SULLIVAN
General, United States Army
Chief of Staff

Official:

MILTON H. HAMILTON
Administrative Assistant to the
Secretary of the Army

D. E. BOTTORFF
Rear Admiral, United States Navy
Commander, Naval Facilities
Engineering Command

MERRILL A. McPEAK
General United States Air Force
Chief of Staff

Official:

WILLIAM O. NATIONS, *Colonel, USAF*
Director of Information Management

Distribution:

Army: To be distributed in accordance with DA Form 12-34-E, Block 0736, requirements for TM 5-809-10.

Air Force: F

*U.S. G. P.O.:1993-330-060