ESTABLISHMENT/EXPANSION OF AN OICC FOR CONTINGENCY CONSTRUCTION

NAVFAC P-427
SEPTEMBER 1970

DEPARTMENT OF THE NAVY
NAVAL FACILITIES ENGINEERING COMMAND
WASHINGTON, D. C. 20390

DISTRIBUTION LIST

SNDL

Part 2 - Al (SO-2 only), 1 cy; A4A, 1 cy; B3, 2 cys; FJ27, 20 cys; FKN1, 10 cys; FKN2, 5 cys; FKN3, 5 cys; FKA6A4, 2 cys; FJ60, 2 cys

Copy to:

Civil Engineer Advisor, COMUSNAVSO
Staff Civil Engineer, CINCPACFLT
Staff Civil Engineer, CINCLANTFLT
Staff Civil Engineer, CINCUSNAVEUR

ABSTRACT

This publication promulgates policy, and sets forth guidance and procedures for establishing or expanding an Officer in Charge of Construction to manage construction in contingency situations. Areas addressed are limited primarily to: construction agent authorities and assignment of areas of responsibility; designations; courses of action, including prepared packages of materials, policies, and procedures for establishing, organizing and staffing an Officer in Charge of Construction; methods and forms of contracting, oriented toward cost reimbursable type contracting; management of design and engineering; material and equipment control; supporting services; and cost estimating.

FOREWORD

The policies, guidance and procedures set forth in this publication are the result of implementing recommendations contained in the "NAVFAC Analysis of RVN Construction"--an internal NAVFAC review and analysis for improving policies and procedures for construction support of contingency operations. They are for the use of the Naval Facilities Engineering Command (NAVFAC) and its field organizations in (1) establishing or expanding an Officer in Charge of Construction, and (2) managing contingency design and construction. This publication is certified as an official Command publication, and has been reviewed and approved in accordance with SECNAV Instruction 5600.16.

W. M. ENGER
Rear Admiral, CEC, USN
Commander
Naval Facilities Engineering Command

CONTENTS

		Page
ABSTRACT		iii
FOREWORD		v

CHAPTER 1. OVERVIEW

1.1	BACKGROUND	1
1.1.1	RVN Analysis	1
1.1.2	Navy Analysis	1
1.1.3	JCS Analysis	1
1.1.4	OSD Analysis	1
1.1.5	NAVFAC Analysis	1
1.1.6	Compilation of Recommendations	1
1.2	PURPOSE AND SCOPE	1
1.2.1	Areas of Coverage	2
1.2.2	Command Policy	2

CHAPTER 2. CONSTRUCTION AGENT

2.1	DEFINITION AND AUTHORITY	4
2.2	DESINATIONS	5
2.2.1	Assigned Areas	5
2.2.2	Unassigned Areas	5
2.2.3	Contingency/Peacetime Designations	5
2.3	SPONSORS	5

CHAPTER 3. ESTABLISHMENT/EXPANSION OF AN OICC

3.1	STANDARD OICC ORGANIZATION	7
3.1.1	Organization Charts	7
3.1.2	Manpower Listings	7
3.1.3	Functional Statements	13
3.1.4	Guideline Position Descriptions (PDs)	13
3.1.5	Special Arrangement for Communications	14
3.1.6	Specific Guidance for Public Affairs Office	14
3.2	STAFFING	14
3.2.1	NAVFAC Personnel	14
3.2.2	Recruiting Procedures	15
3.2.3	Non-Navy Personnel	15
3.2.4	Indigenous and Third Country Personnel	15
3.2.5	Continuity	15

CONTENTS (cont'd.)

		Page
3.3	STAFFING THROUGH CONTRACT	16
	3.3.1 Contracts for Services	16
	3.3.2 "Task Oriented" Type Contracts	20
	3.3.3 Guidelines for Contract Selections	26

CHAPTER 4. CONTRACTING

4.1	PLANS	28
	4.1.1 Contractor Information	28
	4.1.2 Labor Information	29
	4.1.3 Method of Contracting	29
	4.1.4 Type of Contract	29
4.2	COST REIMBURSABLE CONTRACTOR PERSONNEL	30
	4.2.1 Incentives for U.S. Personnel	30
	4.2.2 Third Country Nationals	30
	4.2.3 Indigenous Personnel	30
	4.2.4 Labor Relations Matters	31
4.3	DREDGING	31

CHAPTER 5. ENGINEERING

5.1	SCOPE	32
5.2	ENGINEERING INTELLIGENCE	32
5.3	DESIGN AND ENGINEERING SUPPORT	32
	5.3.1 "Turnkey" Approach	32
	5.3.2 A-E/E-S Cost Reimbursable Contract	32
	5.3.3 Alternatives	32
	5.3.4 Selection and Award	33
	5.3.5 A-E/E-S Capability Considerations	33
	5.3.6 Recurring Reviews	34
5.4	BASE AND SITE DEVELOPMENT PLANNING	34
	5.4.1 Base Development Planning	35
	5.4.2 Site Development Planning	39
5.5	PREFABRICATED STRUCTURES	39

CHAPTER 6. MATERIEL

6.1	CONTROL	41
	6.1.1 Staffing	41
	6.1.2 Subcontract	41
	6.1.3 Construction Support Depot	41
	6.1.4 DCSC	41
	6.1.5 Control System	41
6.2	SOUTHEAST ASIA MATERIAL (SEAMAT)	41
	6.2.1 OICC	42
	6.2.2 In-Country Designer	42
	6.2.3 In-Country Contractor Staff	42

CONTENTS (cont'd.)

Page

6.2.4 Contractor's CONUS Staff 43
6.2.5 ROICC 43
6.2.6 Instructions 43
6.3 FEDERAL STOCK NUMBERS (FSN) 43
6.4 EQUIPMENT 43
6.5 CBLVERSUSGBL 43

CHAPTER 7. SUPPORTING SERVICES

7.1 SCOPE 45
7.2 AIRLIFT SUPPORT 45
7.3 AUTOMOTIVE VEHICLES 45
7.4 ADP AND REPORTING 45
7.4.1 Responsibility 46
7.4.2 Status Reporting 46

CHAPTER 8. COST ESTIMATING

8.1 COST ESTIMATING MANUAL 47
8.2 ESTIMATING PROCEDURES 47
8.2.1 Types of Estimates 47
8.2.2 Procedures 47
8.2.3 Estimating Guides 49

APPENDIX A – Federal and Defense Agencies Using NAVFAC as Design/ Construction Agent A-1

APPENDIX B - DASD(P&I) Memorandums of 8 March 1963, 22 May 1964, 12 June 1964, 28 July 1964, and 29 July 1968 ..... B-1

APPENDIX C - Sponsor Contacts C-1

APPENDIX D - Manpower Listing for OICC Organization No.1, $100 Million or more WIP D-1

APPENDIX E - Manpower Listing for OICC Organization No.2, $25-100 Million WIP E-1

APPENDIX F - Manpower Listing for OICC Organization No.3, $25 Million or Less WIP F-1

APPENDIX G - Functional Statements G-1

APPENDIX H - Guideline Position Descriptions H-1

APPENDIX I - Requirements for Communications I-1

CONTENTS (cont'd.)

Page

APPENDIX J - Plan for Establishing a Command Information Bureau and Subsequent Public Affairs Office J-1

APPENDIX K - Proposed NAVFAC Letter on Establishment of STAR Employee Mobility K-1

APPENDIX L - Proposed NAVFAC Instruction on Employee Mobility ..... L-l

APPENDIX M - Proposed NAVFAC Letter on Establishing Liaison Billets M-1

APPENDIX N - Check List of Actions for Employing Indigenous and Third Country Nationals ..... N-l

APPENDIX O - Proposed Memorandum for Exception to Standard Overseas Tour Length O-1

APPENDIX P - List of Suggested Items of Additional Benefits P-1

APPENDIX R - Dredging Guidelines R-1

APPENDIX S - NAVFAC Instruction on Dissemination of Intelligence Data S-1

APPENDIX T - Policies and Procedures for Selection and Award of A-E/E-S Contracts T-1

APPENDIX U - Acceptable Prefabricated Structures U-1

APPENDIX V - Construction Support Depot V-1

APPENDIX W - Proposed NAVFAC Instruction on SEAMAT W-1

APPENDIX X - Study on CBL Versus GBL X-1

APPENDIX Y - Formats for Construction Status Reporting Y-1

Index Index-1

ILLUSTRATIONS

No.		Page
2-1	Authorities for Design and Construction	4
3-1	OICC Organization No.1 ($100 million or more WIP per year)	8
3-2	OICC Organization No.2 ($25-bO million WIP per year)	9
3-3	OICC Organization No.3 ($25 million or less WIP per year)	10
3-4	Summary of Number of Personnel Requirements	11
3-5	Military/Civilian Comparability Ratings	12
3-6	Comparable Enlisted/Civil Service Rates	12
3-7	Format for Basic Agreement	24
5-1	Standards of Construction for Utilities	37
5-2	Planning Factors for Utilities	39

CHAPTER 1. OVERVIEW

1.1 BACKGROUND. As a result of problems encountered in the planning, programming and execution of construction in the Republic of Vietnam (RVN), reviews at various levels of command have been conducted to set forth recommendations and guidance for improving construction support in future contingency operations.

1.1.1 RVN Analysis. The first overall comprehensive review of construction in RVN was completed in June 1967 at the in-country level, under the cognizance of the Director of Construction on the staff of the Commander, U.S. Military Assistance Command, Vietnam (COMUSMACV). His review was forwarded by the Secretary of Defense to the JCS, military departments, and other Defense offices and agencies for use in conducting their own reviews and providing recommendations to the Office of the Secretary of Defense (OSD) for improving contingency construction.

1.1.2 Navy Analysis. The Navy's review and analysis ("Navy Analysis of RVN Construction"), containing some 48 recommendations, was forwarded to OSD in October 1967 in response to the SecDef request. The other military departments also submitted their analyses; however, they were not as comprehensive as the Navy's.

1.1.3 JCS Analysis. The Joint Chiefs of Staff, in response to the SecDef request, established a Special Military Construction Study Group (SMCSG) to analyze the construction and make recommendations. The SMCSG completed its study in July 1968, and the Group recommendations were processed through joint action (Joint Staff/Services) on a JCS paper. The recommendations, some of which were modified during the processing of the paper, were approved by the JCS in December 1968.

1.1.4 OSD Guidance. Incident to receipt and review of Service and other Defense office and agency recommendations, the OSD issued, in December 1968, a publication for guidance titled "Base Development for Contingency Operations." The guidance contained in the publication generally was in consonance with, and reinforced, the recommendations made by the Navy and the JCS.

1.1.5 NAVFAC Analysis. As a follow-on to the Navy's analysis, NAVFAC conducted its own review and analysis, covering areas considered appropriate for action at the headquarters level. The analysis, issued in February 1969 under the title of "NAVFAC Analysis of RVN Construction," promulgated Command policy guidance on contingency construction, and set forth some 70 recommendation for action. It is the NAVFAC Analysis which provides the basis for this publication.

1.1.6 Compilation of Recommendations. Recommendations and guidance which evolved from the foregoing reviews and analyses have been compiled under the title of "Policies and Procedures for Improving Contingency Construction (Lessons Learned from RVN Construction)," NavFac, May 1969. The publication may be useful for CEC officers and NAVFAC civilian personnel who become involved in base development for, or in, contingency situations.

1.2 PURPOSE AND SCOPE. This publication promulgates policy, and sets forth guidance and procedures to be followed in establishing a new, or expanding an existing, Officer in Charge of Construction (OICC) to manage construction in contingency situations. Although

the policy, guidance and procedures are applicable to most any foreseeable future contingency which involves construction under cognizance of NAVFAC, much of the information presented in this publication may be used as is, or as a point of departure, for managing large construction programs in peacetime situations. With minor exception, it covers the same areas which were developed in the "NAVFAC Analysis of RVN Construction," and reflects implementation of most of the recommendations contained in that publication. The remaining recommendations have been implemented through publication of the new manual on managing cost reimbursable contracts (NavFac P-398, "Cost Reimbursable Construction Contract Manual,"), through development of a comprehensive NAVFAC contingency plan, and through separate actions.

1.2.1 Areas of Coverage. Coverage is limited primarily to the management of contract construction, and as such, does not concern the Naval Construction Forces. Areas include:

(1) Construction agent authorities and designations.

(2) Pre-established courses of action, including prepared packages of materials, policies, and procedures relating to the establishment, organization and staffing of an OICC.

(3) Methods and forms of contracting in future contingencies, including contractor labor matters.

(4) Management of design and engineering, including base and site development/ master planning, and concepts for use of prepackaged buildings and utilities to provide quicker response to facilities requirements.

(5) Material and equipment control.

(6) Supporting services.

(7) Cost estimating.

1.2.2 Command Policy. The Command policy on contingency construction, which has evolved as a result of the findings and recommendations contained in the "NAVFAC Analysis of RVN Construction," is listed below. This policy is reflected in various areas covered in this publication.

"To maintain a high condition of readiness for the effective execution of contingency construction missions in support of Naval and Marine operations, the Naval Facilities Engineering Command will:

"(1) support a strong Navy Base Development Planning effort.

"(2) maintain Contingency Plans for the application of contract and Seabee resources.

"(3) support a ready, trained, equipped Active Duty and Reserve Seabee force.

"(4) support the maintenance of prepositioned, pre-engineered war reserve stocks of highly mobile equipment and material in the form of advanced base functional components.

"(5) integrate the results of the above effort by means of the STINGER System which provides for intensified management and readiness planning of contingency construction resources.

"(6) apply available resources to meet requirements utilizing first the total Seabee force, and then supplementing the Seabees by contract effort to the extent tactical conditions permit.

"(7) utilize a management contract for selected OICC functions when necessary to create a new or expanded OICC.

"(8) utilize the most effective contracting method or combinations of methods available including cost reimbursable and "turnkey" contracts where appropriate.

"(9) utilize the management principles of the "level of effort" concept.

"(10) encourage the programming and funding of major contingency construction programs on a level of capability basis."

CHAPTER 2. CONSTRUCTION AGENT

2.1 DEFINITION AND AUTHORITY. Although there is no universally accepted definition of a designated construction agent, the Office of the Secretary of Defense (OSD) and the military departments usually mean "contract" construction agent when using the term. NAVFAC interprets the term (which is in consonance with Chapter Z of the Military Assistance Manual, Part II, Procedures) as being the "construction arm of the military department assigned single Service responsibility for administering contracts involving engineering and construction in a specified geographical area:' The authority under which NAVFAC executes design and construction for other agencies and offices is varied. Separate legal authorities generally are involved for each agency. They are shown by Figure 2-1. Federal and Defense agencies using NAVFAC as design and construction agent are shown by Appendix A.

2.2 DESIGNATIONS. By memorandum of 8 March 1963 to the Assistant Secretaries (for Installations and Logistics) of the military department, the Deputy Assistant Secretary of Defense (Properties and Installations) designated NAVFAC (then the Bureau of Yards and Docks) and the Corps of Engineers as being responsible for execution of military construction in specific areas of the Far East. The designations were expanded on 22 May 1964, again by memorandum to cover other overseas areas. Some minor modifications have been made, the latest one being 28 July 1968. (See Appendix B for copy of pertinent memorandums.)

2.2.1 Assigned Areas. Current construction agent designations by area are as follows:

(1) Corps of Engineers: Japan; Korea; Taiwan; the Ryuku Islands (Okinawa); the Marshall Islands; Canada (excepting Newfoundland) and Greenland; Europe, including the Azores; North Africa from Morocco to Somali Republic; the Middle East, and Southeast Asia to the western borders of Laos and Thailand.

(2) NavFac: Philippine Islands; the Mariana Islands (Guam); Thailand; Vietnam; Laos; Cambodia; Newfoundland; Iceland; Indian Ocean-Australia, New Zealand, including the island complex north of Australia; Johnson and Midway Islands; and all other Pacific Ocean islands not previously covered under the Far Eastern Area construction assignments; Bermuda and the Caribbean Area, including Puerto Rico and islands in the Caribbean Sea; Downrange stations in the Atlantic and South Atlantic Ocean Areas.

(3) Air Force: United Kingdom.

2.2.2 Unassigned Areas. Construction agent responsibilities for Central and South America, and Africa south of the line running from Morocco to Somali Republic, have not been assigned.

2.2.3 Contingency/Peacetime Designations. By memorandum of 19 February 1969 to the Office of the Joint Chiefs of Staff, the Deputy Assistant Secretary of Defense (Properties and Installations) stated that "Currently designated construction agents should function within their areas of responsibility under both peacetime and contingency conditions. The fact that different operational commands may be responsible for an area, depending on whether peacetime or contingency conditions prevail, should not require a change in construction agents."

Agency	Legislation
Civil Defense	50 USC App. 2257 - Fed. Civil Defense Act of 1950
NATO, MAP, etc.	22 USC 2311 & 2313(b) - Foreign Assistance Act of 1961
AID (Agency for International Development	22 USC 2383(a) - Foreign Assistance Act of 1961
NASA	42 USC 2473b(5) & (6) - Nat'l Aeronautics & Space Act of 1958
Interior - Fish & Wildlife	16 USC 742(e) - Fish & Wildlife Act of 1956
Commerce - Weather Bureau	15 USC 325
Agriculture	16 USC 590(d) - Conservation
AEC (Atomic Energy Commission	42 USC 2201(f) - Atomic Energy Act of 1954
Nat'l Science Foundation	42 USC 1870(c) & 1873(g) - National Science Foundation Act of 1950
State	22 USC 294 - Foreign Services Building Act of 1926
DOD (A.F., DSA, DASA, etc.)	605, PL 88-390 - 1965 MCON Act
Trust Territory of Pacific	48 USC 1681
General - Economy Act	31 USC 686

FIGURE 2-1
Authorities for Design and Construction

2.3 SPONSORS. The sponsor is the office or agency who conceives, justifies, and obtains authorization and funding for the design and/or construction of a facility. Military sponsors are the Army Navy and Air Force. Defense agency sponsors (under the direction and guidance of, and with programming assistance from, the OSD) are Defense Atomic Support Agency (DASA), Defense Communications Agency (DCA), Defense Contract Audit Agency

(DCAA), Defense Intelligence Agency (DIA) and the Defense Supply Agency (DSA). Federal agency sponsors include those non-Defense agencies listed in paragraph 2.1 above. A complete listing of all sponsors (along with their headquarters and field office contact points) which NAYFAC has been, or may be, assigned construction agent responsibilities, is shown by Appendix C. NAVFAC P-420 "Sponsor Manual for Design and Construction" has been developed for indoctrinating sponsor personnel into the policies and procedures of NAVPAC when NAVFAC is serving as construction agent for execution of sponsor programs.

CHAPTER 3. ESTABLISHMENT/EXPANSION OF AN OICC

3.1 STANDARD OICC ORGANIZATION. In future contingency operations, an independent OICC organization should be established (1) at the outset if program magnitude, complexity and other factors indicate a requirement for special emphasis to be placed upon construction execution, or (2) early in a program build-up, rather than prolonged operation as a Deputy or Resident to an OICC located in another country. Further, depending on program magnitude, complexity or construction, location of construction sites, and other factors, effective ROICC and/or DIRCON organizations should be established on a decentralized basis during initial stages of construction execution. The OICC organization established or expanded to execute contingency construction should be sensitive to rapid change in consonance with in-country political/military situations; it should be heavy in program management and financial control; and there should be a tendency toward over-staffing rather than under-staffing. The organizations depicted in this chapter are intended to serve as guidelines for the establishment or expansion of future OICC's worldwide, under both peacetime and mobilization conditions. Therefore, they are presented as general outlines which may be adapted or changed to meet a particular situation. Charts and manpower listings have been developed for three various sized programs: (1) $100 million or more work-in-place (WIP) per year, (2) $25 -$100 million WIP per year, and (3) $25 million or less WIP per year. The manpower listings describe the minimum number of personnel required, and it is expected that the numbers would increase in proportion to additional WIP. The organizations, manpower listings, and functional statements have been developed to accommodate cost reimbursable contracting; thus, the guidance set forth in Volume 2 of NAVFAC P-398 ("Cost Reimbursable Construction Contract Manual") is applicable, and should be used in conjunction with this publication.

3.1.1 Organization Charts. Figure 3-1, organization No.1, depicts a standard organization chart for an OICC which has $100 million or more WIP per year. Figure 3-2, organization No.2, shows the one for $25 -$100 million per year, and 3-3, organization No.3, shows the one for $25 million or less per year. The organizations shown by Figures 3-1 and 3-2 are oriented toward the bulk of work being handled under a cost reimbursable type contract. Although the organization shown by Figure 3-3 will accommodate cost reimbursable contracting, lump sum contracting should be used if at all possible.

3.1.2 Manpower Listings. The manpower listings which accompany the organization charts correspond by number to the charts, that is, the No. I listing goes with the No.1 chart (Figure 3-1), No.2 listing goes with No.2 chart, and the No.3 listing goes with the No.3 chart. The manpower listings are shown, respectively, by Appendices D, E, and F. Figure 34 is a summary which shows the total number of civilian and military billets required for each organization. Notes have been added to the Manpower Listings describing specific situations; for instance, personnel services probably would be provided by the Overseas and Returning Placement Service. In the Design Division, staffing levels for $25, $65 (the middle of the $25- $100 organization) and $100 million levels of WIP were calculated based on a design rate of: 4 percent of construction costs for in-house design, 5 percent of construction costs for A/E design, and 15 percent of the A/E fee for supervision and technical guidance of A/E design. In addition, the staffing was developed such that 25 percent of the

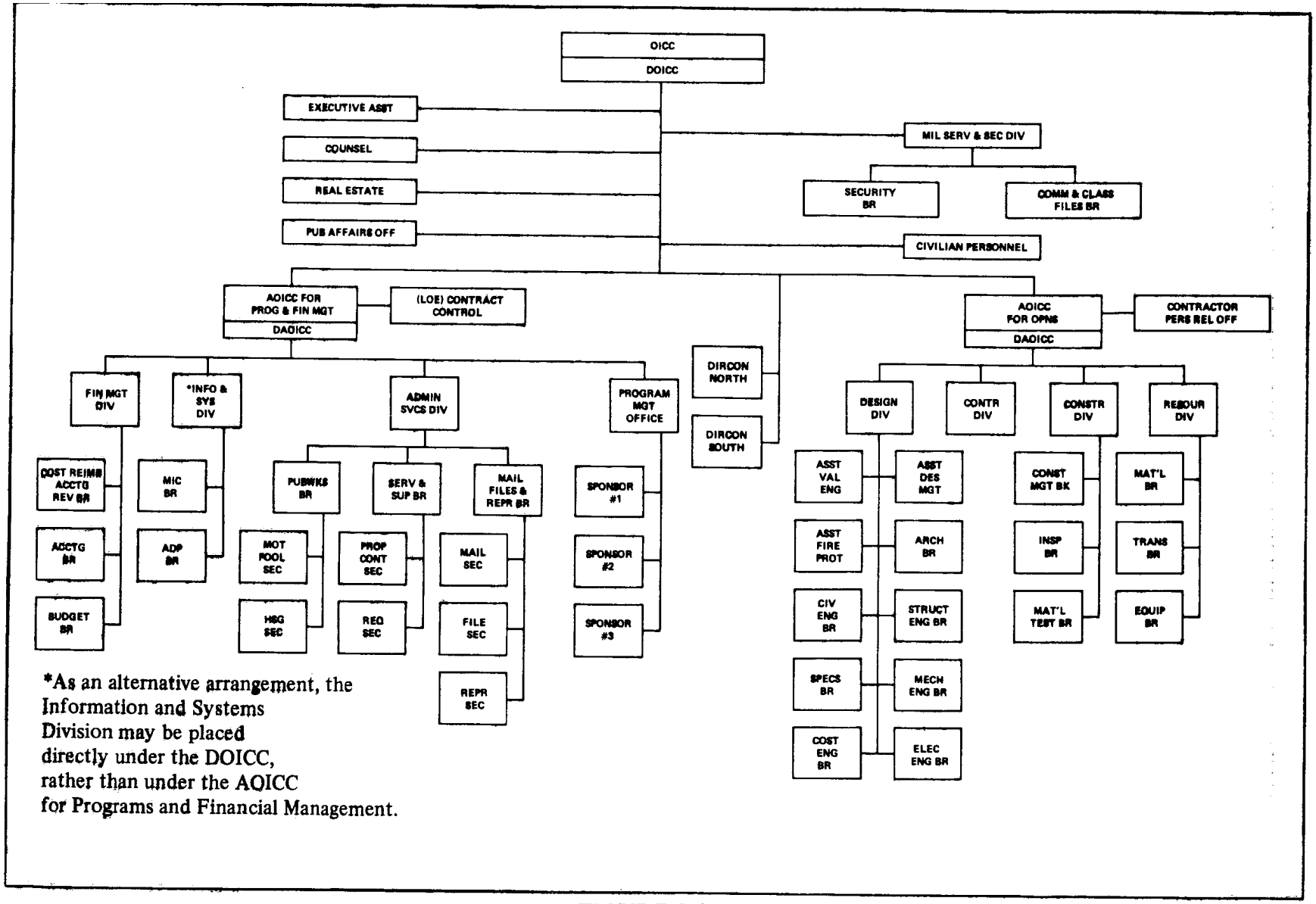

FIGURE 3-1
OICC Organization No. 1
($100 Million or More WIP Per Year)

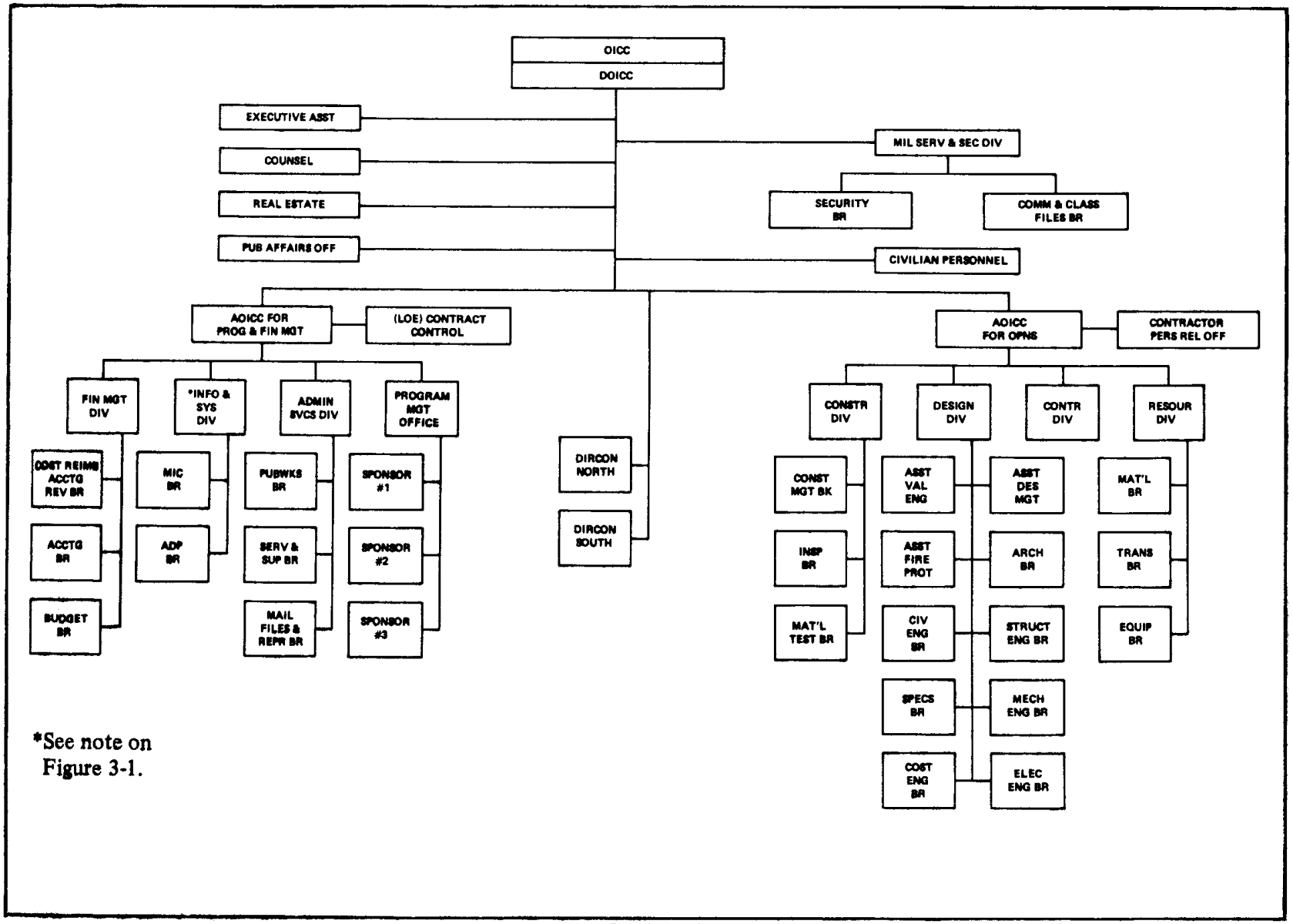

*See note on Figure 3-1.

FIGURE 3-2
OICC Organization No. 2
($25-$100 Million WIP Per Year)

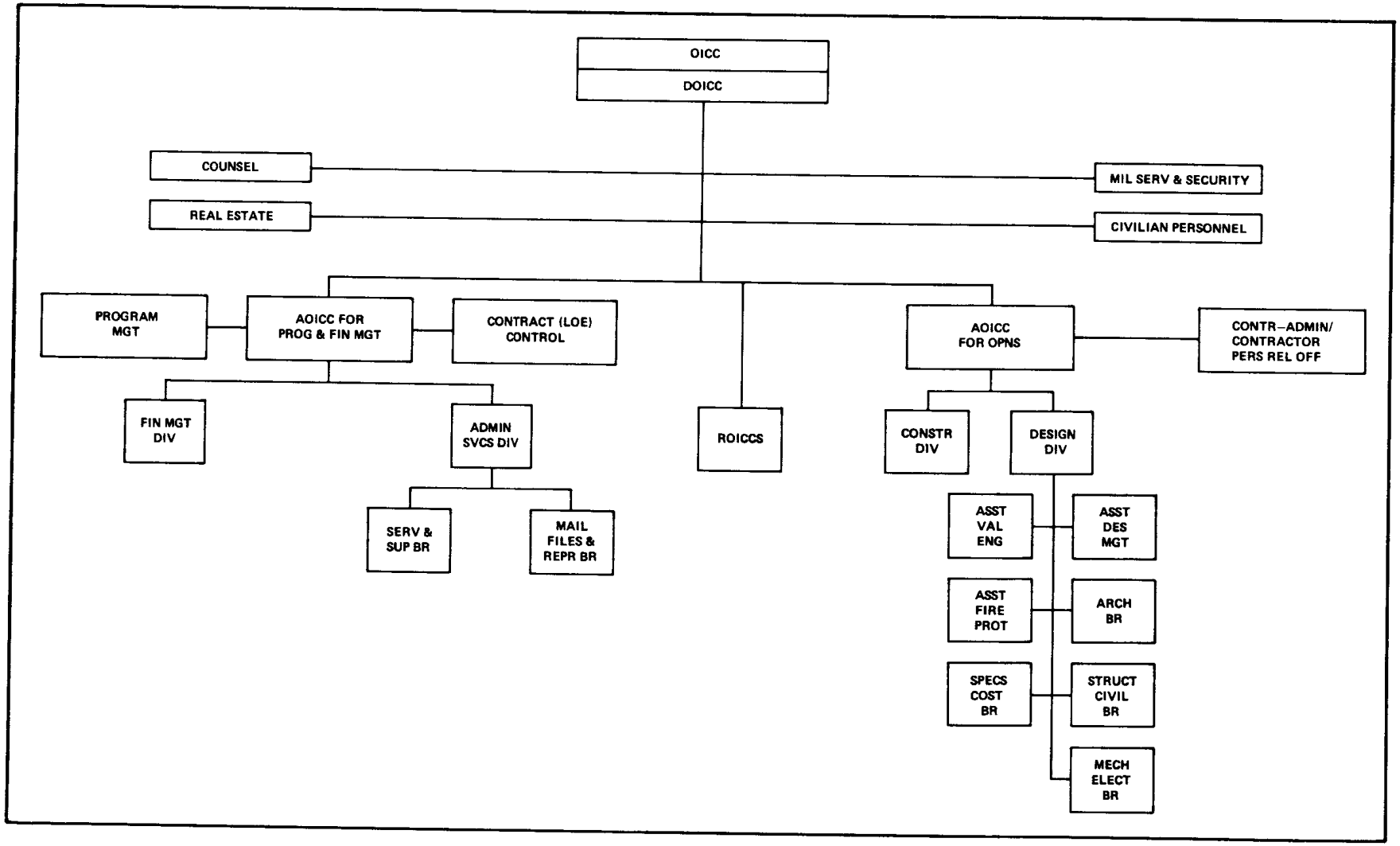

FIGURE 3-3
OICC Organization No. 3
($25 Million or Less WIP Per Year)

		BILLETS BY GRADE								
		RAdm	Capt	Cdr	LCdr	LT	Lt(jg)	Ens	Enl	Total
#1 Organization $100 + Million WIP	Military Grade Structure	1	5	10	19	10	1		6	52
	Total Civilians									294
#2 Organization $25 - $100 Million WIP	Military Grade Structure		4	8	16	9	5	1	4	47
	Total Civilians									193
#3 Organization $25 or Less Million WIP	Military Grade Structure		1	3	6	3	2			15
	Total Civilians									60

FIGURE 3-4
Summary of Number of Personnel Requirements

available technical man-years would be devoted to challenging in-house design for the purpose of developing and maintaining technical expertise and competence.

3.1.2.1 Comparable military/civilian grades. Figure 3-5 shows comparable military and civilian grades used generally in NAVFAC. This has been used in the manpower listings to indicate the civilian grades which can be substituted, at the discretion of the OICC, for military.

The following indicates levels of comparability as used generally in NAVFAC; it is not reflected in any official document.	
CAPT:	Comparable to (or in supervisory capacity over) GS-15
CDR:	Comparable to (or in supervisory capacity over) GS-14
LCDR:	Comparable to (or in supervisory capacity over) GS-13
LT:	Comparable to (or in supervisory capacity over) GS-12

FIGURE 3-5
Military/Civilian Comparability Ratings

3.1.2.2 Enlisted personnel. Few enlisted personnel are included in the manpower listings. However, a significant portion of the OICC organization, particularly in the early stages of an emergency situation, might have to be manned by military personnel. For this reason, the comparable enlisted/Civil Service rates (Figure 3-6) are included to show which enlisted grades would qualify for specific civilian positions.

3.1.3 Functional Statements. The functional statements shown by Appendix G apply to the largest OICC Organization, No.1; they should be modified and combined in line with the "downward" structuring shown by the organization charts for No.2 and No.3. The parent EFD or a larger OICC will perform some functions for the small organization. Because the statements have been developed for managing cost reimbursable type contracts for the most part, appropriate modifications will have to be made if other types of contracts are involved. For instance, a "contract (LOE) control" group would not be required if a cost reimbursable contract for construction was not involved. Volume 2 of NavFac P-398. "Cost Reimbursable Construction Contract Manual," contains additional guidance on functions by organizational element.

3.1.4 Guideline Position Descriptions (PD's). Guideline PD's, arranged in alphabetical order by position title, are contained in Appendix H. They do not cover all positions shown in the organization charts and in the Manpower Listings; however, they include the primary ones which may be modified easily to correspond with any OICC operation, regardless of its size, geographic location (outside CONUS), or types of construction work involved. They are necessarily general in terminology, because they reflect no specific situation, and are only guides.

3.1.4.1 Identical Positions. The non-supervisory position descriptions (for instance, Labor Relations Specialist), for which GS-l 2 or below is suggested, are subject to identical additional action. For example, a number of employees may be hired to perform the work described in each PD, depending upon the size and needs of the OICC involved, without establishing new positions and preparing additional PDs.

POSITION DESCRIPTION	GS CLASS.	RATES/GRADES
CLERK-TYPIST	GS-3	YNSN/YN3
FILE CLERK	GS-4	YN2
SECRETARY-STENO	GS-4 GS-5	YN2 YN1
LABOR/MATERIAL CHECKERS	GS-3 GS-4	SK3 SK2
SUPPLY CLERKS	GS-5 GS-7	SK1 SKC
PROCUREMENT/PURCHASING/ SUPPLY SPECS.	GS-9	SKCS
CONSTRUCTION INSPECTORS	GS-7 GS-9	BUC/UTC/CEC/ EDC BUCS/UTCS/CECS/ EDCS
CONSTRUCTION REPRESENTATIVES	GS-11	CUCM/UTCM/ EQCM

3-6
Comparable Enlisted/Civil Service Rates

3.1.4.2 Clerical Positions. Not all clerical positions have been described, since the duties and qualifications requirements may vary widely depending upon the location of the OICC, the availability of qualified U.S. hires vs. foreign nationals, foreign language requirements, etc. By using checklist PDs to the maximum extent, establishment of clerical (clerk-typists and clerk-stenographers) positions through 08-4 is a quick and easy process.

3.1.4.3 Information and Systems Division. Only the Division Director position description is included in Appendix J for the Information and Systems Division. It was prepared to insure visibility of the function.

3.1.4.4 Qualification requirements. Several PD's in the Appendix have no qualification requirements stated. It is considered highly probable that the educational, experience and various other specific requirements of these positions could differ greatly, depending upon the location of the OICC, the type of construction projects undertaken, etc. Because qualification requirements are normally a factor for selection of employees, and not for the classification of positions, these requirements should be determined at the time the OICC is established.

3.1.5 Special Arrangement for Communications. Communications pose a special problem to an OICC during construction operations, particularly in the early phases. Therefore, the employment of specialized firms and/or personnel during the initial stages of mobilization should be considered. This will help establish requirements and insure development of adequate communications for both the OICC and contractor(s). There may be occasions, however, when the OICC finds it necessary to establish and maintain his own communications. To do so, communications equipment and personnel will be required. Appendix I shows these requirements for OICC Organization No.1. The requirements may be modified downward for Organizations No.2 or No.3 in accordance with needs.

3.1.6 Specific Guidance for Public Affairs Office. Although the organizations, manpower listings and functional statements cover, in general, the public affairs aspect of the OICC operations, there are specific requirements which should be considered. These are set forth in Appendix J --- a complete, detailed plan for establishing a Command Information Bureau and Subsequent Public Affairs Office for the OICC.

3.2 STAFFING THROUGH MEANS OTHER THAN CONTRACTS. The first measure for consideration in staffing an OICC involved in contingency operations, is to make use of NAVFAC's "hard corps" civilian force of professionals who are fully qualified in management, fiscal, technical, and other aspects of construction. Other measures to consider involve: (1) better and more streamlined recruiting procedures; (2) use of personnel from other organizations and agencies; (3) use of qualified indigenous and third country national personnel as appropriate to overseas construction; (4) provision of incentives or additional benefits; and (5) staffing through use of contract(s), which is discussed in paragraph 3.3.

3.2.1 NAVFAC Personnel. Contingency operations involving NAVFAC must provide for use of a corps of mobile, qualified, experienced personnel available for assignment to emergency construction programs. This corps staff should be available as needed on either a permanent (PCS) or temporary (TDY) basis. Such a corps is available in widespread NAVFAC locations at the present time. It is made up of former employees of OICC Spain, former and present employees of OICC Thailand and OICC RVN, and a number of departmental and field employees who performed long term TDY assignments in support of SEAsia operations. To maintain a continuing inventory of these employees, and to advise new employees on mobility requirements, the measures indicated below are applicable.

3.2.1.1 Specialized Technical Assignments Roster (STAR). First, the roster indicated by Appendix K will be activated at a propitious time. It may be modified to fit specific circumstances. In general, it provides for voluntary registration of employees for service at specific locations on either a PCS or TDY basis. This roster is only for relatively active use; otherwise it will fall into general disrespect and employee motivation for registration will be lessened. Second, a roster of personnel with appropriate OICC experience will be compiled as employees are registered in Navy Career Plans applicable to their skills area. This compilation of names and primary skills areas will be maintained at NAVFAC as a resource for canvassing personnel needed for special or continuing assignments in connection with contingency operations.

3.2.1.2 Mobility. It is the policy of this Command to transfer employees, either on a temporary duty (TDY) or permanent assignment (PCS) basis, during emergency situations to different jobs and different duty stations, so long as statutory and regulatory rights of the employees are protected against improper actions. This policy will be implemented only when exhaustive recruitment efforts and voluntary services have failed to meet the emergency manpower requirements of the OICC. Issuance of Appendix L is one of the planned measures to implement the policy.

3.2.2 Recruiting Procedures. To help fulfill, on a continuing basis, the staffing requirements of the OICC, the following procedures are applicable:

(1) Because referral of applications from a recruiting agent to an overseas employer only delays the recruiting process, selection authority will be placed in the hiring agent's office located in the CONUS when expedited staffing is required. This office, representing the Navy as hiring agent, is the Overseas and Return Placement Staff (ORPS), located in the Capital Area Personnel Office.

(2) Message (or letter) recruitment requests will be submitted to the ORPS.

(3) The most rapid way to obtain qualified employees for overseas employment, is through analysis of applications on file in the appropriate Navy career plan, general advertisement of the position, and request for candidates from the DOD Automated Overseas Employment Referral Program. This Program automatically covers candidates from other agencies and offices, provides a continuing source of employee and job matches, and opens a wider reservoir of skills by including candidates from other organizations. DODINST 1404.7-MI describes the procedures applicable to this program.

(4) If urgency dictates measures additional to the capability provided by ORPS, recruiting contact responsibility will be assigned to NAVFAC's Engineering Field Divisions (EFD's). EFD's can then (1) review their own staffs for PCS and TDY candidates; and (2) provide specialized assistance to the ORPS by taking selected approaches to professional organizations and institutions in the promotion of publicity, and by reviewing candidates for the positions.

3.2.3 Non-Navy Personnel. In addition to obtaining specialized Navy military personnel (for instance, Supply Corps officers for managing procurement and supply functions), personnel from other Services and agencies should be obtained if such Services and agencies are sponsors of programs being executed by the OICC. The personnel obtained, on a PCS basis rather than TDY, would service as members of the OICC staff in the Program Management Office, and as required, at the field level under, or along with, the Directors of Construction (DIRCON's) or Resident Officers in Charge of Construction (ROICC's). Appendix M would be used to effect the necessary actions.

3.2.4 Indigenous and Third Country Personnel. For overseas construction, qualified indigenous and third country national personnel should be used to the maximum extent practicable. However, plans developed around this premise must take cognizance of political implications which might be involved, such as obtaining country clearance for use of third country nationals, wage rates, time and procedures involved for processing recruitments through in-country local agencies. Also, various laws and controls outside the purview of the U.S. Government which have an impact on such employees must be considered. Appendix N is a check list of actions to be taken when such personnel are to be employed.

3.2.5 Continuity. Because of the complex requirements which may be involved in the planning, programming, and executing of construction programs, staffing continuity for OICC personnel is essential. To obtain the required continuity, tours for key personnel (both military and civilian) should be extended. Commensurate with the long tour assignments, incentives and increased benefits need to be provided. Important to the provision of continuity is a planned overlap of personnel, which involves (for civilian personnel) the initiation of recruitment actions far in advance of employees leaving at the end of their contract periods.

3.2.5.1 Military personnel. All military billets in the OICC organization should be scrutinized by the OICC for "key" billet identification. Such identification should be made in conjunction with a review of overall military personnel assignment policies for the area of operations. Generally, key billets will be identified as those which involve large amounts of

management information and actions, or extensive knowledge of operations and work in progress. Particular attention must be given those billets for the OICC himself, his Assistant OICC's, officers in Program Management and Contract Control, and DIRCON's. Actual requirements for extended tours of key military personnel will depend upon the length of "standard" tours, scope and type of construction program, and other factors related to an actual contingency. Only a minimum number of extended tours are to be requested. After billets are determined by the OICC, NAVFAC will request exception to standard tour lengths in a manner similar to that shown by Appendix O.

3.2.5.2 Civilian personnel. Maintenance of continuity in civilian staffing requires orientation of new occupants in the organizational functional environment in which he will be working, and the acquaintance with current status of the range of assignments in which he will be engaged. This orientation is essential for key personnel. Ideally, his mentor in this orientation is his predecessor in the position. To achieve simultaneous presence of both the incoming and outgoing employees, information concerning specific departure dates for employees and a capability for rapid staffing to effect replacement, is required. To provide necessary lead times on departure, the OICC must require completion of Forms 52 by employees 90 days prior to leaving the location for separation or for contract renewal leave. Upon receipt of the SF 52 indicating separation of an employee, the OICC should initiate, without delay, recruitment action with the ORPS.

3.2.5.3 Incentives and Additional benefits. Concurrent with DOD/CNO/BUPERS approval of designated key military billets in the OICC organization, NAVFAC will initiate actions for obtaining approval of incentives or additional benefits for those key personnel which will be required to serve extended, unaccompanied, tours. These benefits, a list of which is suggested by Appendix P, will be in addition to those enjoyed by personnel on a standard length tour. Action will be initiated on items contained in Appendix Q, only upon request of the OICC.

3.3 STAFFING THROUGH CONTRACT. The measures outlined in paragraph 3.2, if effected, should provide responsive OICC staffing support. However, based upon world-wide experience, it would be fallacious to assume that in all situations total reliance could be placed upon responsive staffing support through use of these measures only--there are too many potential problems and delays in obtaining sufficient numbers of qualified personnel. Use of some other measure must be considered. In this respect, all planning for large, complex programs should be centered around obtaining OICC staffing support by functional areas (such as materiel control, design and engineering, program/project management, and financial management) through means of contract(s). This will reduce requirements for officer personnel as well as for Civil Service personnel. The Civil Service laws and regulations, and the Classification Act, set forth requirements which must be met by the Government in hiring its employees. In addition, personnel ceilings have been established for the Department of Defense. Except as otherwise authorized by express statutory authority, as implemented by the annual DOD Appropriation Act, "Expert and Consultant Services," it is Command policy that these laws and regulations shall not be circumvented through the medium of "personal services" contracting. This type contracting is the procurement of services by contract in such a manner that the contractor or his employees are, in effect, employees of the Government. The OICC is responsible for assuring the implementation of this policy by following the criteria below. Prior to award of any such contract, approval of Command Headquarters shall be obtained. (ASPR 22-102.1.)

3.3.1 Contracts for Services. There are no definitive rules for characterizing particular services as "personal" or "non-personal." There are many factors involved, all of which are

not of equal importance. The characterization of services in a particular case cannot be made by simply counting factors, but can be made only by balancing all the factors in accordance with their relative importance.

3.3.1.1 Factors. The factors listed below, as well as any others which are relevant, shall be considered by the OICC. (Some of the following factors include parenthetical explanations or qualifications which indicate the type of judgment that the OICC should exercise:)

(1) The nature of work:

(a) To what extent the Government can obtain civil servants to do the job, or whether the contractor has specialized knowledge or equipment which is unavailable to the Government. (This is a factor which might be useful in a doubtful case, but should not in itself create doubt about services which are otherwise clearly nonpersonal.)

(b) To what extent the services represent the discharge of a Governmental function which calls for the exercise of personal judgment and discretion on behalf of the Government. (This factor, if present in a sufficient degree, may alone render the services personal in nature.)

(c) To what extent the requirement for services to be performed under the contract is continuing rather than short-term or intermittent. (This is a factor which might be useful in a doubtful case, but should not in itself create doubt about services which are otherwise clearly nonpersonal.)

(2) Contractual provisions concerning the contractor's employees. (In considering the following, it should be noted that supervision and control of the contractor or his employees, if present in a sufficient degree, may alone render the services personal in nature:)

(a) To what extent the Government specifies the qualifications of, or reserves the right to approve, individual contractor employees. (Granting or denying security clearance, and providing for necessary health qualifications, are always permissible to some extent in specifying, in the contract, the technical and experience qualifications of contractor employees, if this is necessary to assure satisfactory performance.)

(b) To what extent the Government reserves the right to assign tasks to, and prepare work schedules for, contractor employees during performance of the contract. (This does not preclude inclusion in the contract, at its inception, of work schedules for the contractor, or the establishment of a time of performance for orders issued under a requirements or other indefinite delivery-type contract.)

(c) To what extent the Government retains the right (whether actually exercised or not) to supervise the work of the contractor employees, either directly or indirectly.

(d) To what extent the Government reserves the right to supervise or control the method in which the contractor performs the service, the number of people he will employ, the specific duties of individual employees, and similar details. (However, it is always permissible to provide, in the contract, that the contractor's employees must comply with regulations for the protection of life and property. Also, it is permissible to specify a recommended, or occasionally even a minimum, number of people the contractor must employ, if this is necessary to assure performance; but in that event, it should be made clear, in the contract, that this does not in any way minimize the contractor's obligation to use as many employees as are necessary for proper contract performance.)

(e) To what extent the Government will review performance by each individual contractor employee, as opposed to reviewing a final product on an overall basis after completion of the work.

(f) To what extent the Government retains the right to have contractor employees removed from the job for reasons other than misconduct or security.

(3) Other provisions of the contract:

(a) Whether the services can properly be defined as an end product.

(b) Whether the contractor undertakes a specific task or project that is definable either at the inception of the contract or at some point during performance, or whether the work is defined on a day-to-day basis. (However, this does not preclude use of a requirements or other indefinite delivery4ype contract, provided the nature of the work is specifically described in the contract, and orders are formally issued to the contractor rather than to individual employees. In this regard, see paragraph 3.3.2 for "task oriented" type contracts.)

(c) Whether payment will be for results accomplished, or for time worked. (This is a factor which might be useful in a doubtful case, but should not in itself create doubt about services which are otherwise clearly nonpersonal.)

(d) To what extent the Government is to furnish the office or working space, facilities, equipment, and supplies necessary for contract performance. (This is a factor which might be useful in a doubtful case, but should not in itself create doubt about services which are otherwise clearly nonpersonal.)

(4) Administration of the Contract:

(a) To what extent the contractor employees are used interchangeably with Government personnel to perform the same functions.

(b) To what extent the contractor employees are integrated into the Government's organizational structure.

(c) To what extent any of the elements in subparagraphs (2) and (3) above are present in the administration of the contract, regardless of whether they are provided for by the terms of the contract.

3.3.1.2 Examples of personal and nonpersonal services. It is to be emphasized that the examples below are for illustrative purposes only, and are not to be used as the basis for a determination in any specific case.

(1) Personal. The following are examples of personal services contracts:

(a) Contract for the furnishing of ordinary, day-to-day stenographic arid secretarial services in a Government office under Government supervision exercised either directly or through a contractor supervisor, even if only for a peak work period of two weeks.

(b) Contract for preparation of a staff type report on the operation of a particular Government office or installation, where no specialized skills are required and the report would ordinarily be prepared by the regular officers or employees of the office or installation, even if there is to be no Government supervision, and even if payment is to be for an "end product" report.

(c) Contract for the furnishing of persons to perform the various day-to-day functions of contract administration for a Government agency, even if there is no Government supervision.

(d) Contract with an accounting firm to perform day-to-day accounting functions for the Government.

(2) Nonpersonal. The following are examples of nonpersonal service contracts:

(a) Contract for field engineering work requiring specialized equipment and trained personnel unavailable to the Government, where the contractor performs work, as described in the contract, free of Government supervision.

(b) Contract with an individual for delivery of lectures without Government supervision, at specific places, on specific dates, and on a specialized subject, even if payment is by the hour.

(c) Contract for janitorial services, where the contract provides for specific tasks to be performed in specific places free of Government direction, supervision, and control over the contractor's employees, at a fixed price for the work to be performed.

(d) Research and development contract, providing a fixed price for a level of effort, as long as the work is performed by the contractor independently of Government direction, supervision. and control (ASPR 22-102.2.)

3.3.1.3 Determination and documentation. At the time the OICC receives, through a purchase request or other document, any requirement for the procurement of such services, he shall determine whether the procurement complies with the policy and criteria set forth above. If determined a proper procurement, he shall not proceed until he has documented the contract file with:

(1) A brief memorandum of his determination that the services are nonpersonal, together with his reasons and all the facts which bear on the personal-nonpersonal question, or a memorandum of his determination that procurement of the services is expressly authorized by statute, regardless of whether personal.

(2) An opinion of Counsel in any doubtful case, and in any case where express statutory authorization is invoked.

(3) Any further documentation which may be required by Command implementation. However, the following are exempted from the documentation requirements: (a) Contracts for construction and contracts for architect-engineering services for preparation of designs, plans, drawings and specifications awarded pursuant to established procedures. (b) Simplified small purchases issued pursuant to ASPR Section III, Part 6. (c) Normal routine recurring service contracts not exceeding $10,000. (ASPR 22-1 02.4.)

3.3.1.4 Deviations. Existing ASPR requirements do not demand that OSD permission be obtained whenever contracts are used for meeting OICC staffing requirements. However, since ASPR Section XXII sets forth complete policy and procedures for this type of contract, any deviation would necessitate securing approval in accordance with deviation procedures of ASPR 1-109. When the OICC considers a deviation is necessary, lie shall advise the Command Headquarters, who in turn, will determine whether an ASPR deviation should be sought. ASPR 1-109 will be used as a guide. Requests to Command Headquarters for approval of the deviation shall contain, as a minimum, the following:

(1) Identification of the ASPR requirement from which deviation is sought.

(2) A full description of the deviation and the circumstances in which it will be used.

(3) A description of the intended effect of the deviation.

(4) Copy of any pertinent documents.

(5) A statement of the period of time for which the deviation is needed.

(6) Detailed reasons supporting the request. (ASPR 1-109.5.)

3.3.1.5 Competition in service contracting. Contracts for services shall be awarded through formal advertising, whenever "feasible and practicable under the existing conditions and circumstances" (10 U.S.C. 2304 (a); 1-3002). When formal advertising is not feasible and practicable, and negotiation is authorized (see U.S.C. 2304(a) (1) through (17); Section III, Part 2), competition still must be obtained to the maximum practicable extent, except for procurements not in excess of $250 (1-300.1,3-101,3-604). The method of obtaining competition will vary with the type of service being procured, and will not necessarily be

limited to price comparison alone. (See ASPR 3-805.1(d).) For contract procedures applicable to award of such contracts, see paragraph 3.3.2, "Task Oriented" Type Contracts, and Contract Administration Manual, NavFac P-68.

3.3.2 "Task Oriented" Type Contracts. When workload requirements exceed existing manpower capability, the problem may be alleviated by employing appropriate firms through use of "task-oriented" type contracts. Such contracts would meet unforeseen requirements and avoid the performing and executing of a series of similar contracts with commensurate delays. A "task-oriented" type contract is an "open-end" type contract whereby the Government and contractor agree, in advance, to the terms and conditions under which the Contractor will perform "orders" or "task orders" issued during the term of the contract. It will include all applicable contract provisions except quantity and time of delivery. Prices for services performed should be negotiated and agreed upon in advance, on a man-hour or man-day basis, with broad definitions of scope requirements. Depending on the particular requirement, scope can be written pursuant to obtaining OICC support in the designated functional areas (such as material control, or design and engineering which could cover soil testing, surveying, specification writing, or cost estimating). There are several different types, which warrant consideration, described below.

3.3.2.1 Indefinite delivery type contracts. The following is excerpted from the Armed Services Procurement Regulation, Section 3, and is the established Command procurement policy and procedure for this type of contract. It permits procurement when the exact time of delivery for the supplies or services is not known at time of contract.

(1) Definite quantity contracts: This type of contract provides for a definite quantity of specified supplies, or for the performance of specified services for a fixed period, with deliveries or performance at designated locations upon order. Depending on the situation, the contract may provide for firm fixed-prices, price escalation, or price redetermination. It is particularly suitable for use where it is known in advance that a definite quantity of supplies or services will be required during a specified period, and are regularly available, or will be available after a short lead time. Advantages of this type of contract are that it permits stocks in storage depots to be maintained at minimum levels, and permits direct shipment to the user.

(2) Requirements Contracts: This type of contract provides for filling all actual purchase requirements of specific supplies or services of designated activities during a specified contract period, with deliveries to be scheduled by the timely placement of orders upon the contractor by activities designated either specifically or by class. Depending on the situation, the contract may provide for firm fixed-prices price escalation, or price redetermination. An estimated total quantity is stated for the information of prospective contractors; it should be as realistic as possible. The estimate may be obtained from the records of previous requirements and consumptions, or by other means. Care should be used in writing and administering this type of contract to avoid imposition of an impossible burden on the contractor. Therefore, the contract shall state, where feasible, the maximum limit of the contractor's obligation to deliver, and, in such event, shall contain also, appropriate provision limiting the Government's obligation to order. When large individual orders from more than one activity are anticipated, the contract may specify the maximum quantities which may be ordered under each individual order or during a specified period of time. Similarly, when small orders are anticipated, the contract may specify the minimum quantities to be ordered. Funds are obligated by each order and not by the contract itself. A requirements contract may be used for procurements where it is impossible to determine in advance, the precise quantities of the supplies or services that will be needed by designated activities during a definite period of time.

Advantages of this type of contract are:

(a) Flexibility, with respect to both quantities and delivery scheduling, is obtained.

(b) Supplies or services need be ordered only after actual needs have materialized.

(c) Where production lead time is involved, deliveries may be made more promptly because the contractor is usually willing to maintain limited stocks in view of the Government's commitment.

(d) Price advantages or savings may be realized through combining several anticipated requirements into one quantity procurement.

(e) It permits stock to be maintained at minimum levels, and allows direct shipment to the user.

Generally, the requirements contract is appropriate for use when the item of service is commercial or modified commercial in type, and when a recurring need is anticipated.

(3) Indefinite Quantity Contracts: This type of contract provides for the furnishing of an indefinite quantity, within stated limits, of specific supplies or services, during a specified contract period, with deliveries to be scheduled by the timely placement of orders upon the contractor by activities designated either specifically or by class. Depending on the situation, the contract may provide for firm fixed prices, price escalation, or price redetermination. The contract shall provide, during the contract period, that the Government shall order a stated minimum quantity of the supplies or services; that the contractor shall furnish such stated minimum quantities; and, if and as ordered, any additional quantities not exceeding a stated maximum. The maximum should be as realistic as possible, and may be obtained from the records of previous requirements and consumptions, or by other means. To assure that the contract is binding, the minimum must be more than a nominal quantity; yet it should not exceed the amount which the Government is fairly certain to order. When large individual orders, or orders for more than one activity, are anticipated, the contract may specify the maximum quantities which may be ordered under each individual order or during a specified period of time. Similarly, when small orders are anticipated, the contract may specify the minimum quantities to be ordered. Funds for other than the stated minimum quantity are obligated by each order and not by the contract itself.

(a) Use. An indefinite quantity contract may be used where it is impossible to determine, in advance, the precise quantities of the supplies or services that will be needed by designated activities during a definite period of time. It is not advisable for the Government to commit itself for more than a minimum quantity. Advantages of this type of contract are:

1. Flexibility, with respect to both quantities and delivery scheduling, is obtained.

2. Supplies or services need be ordered only after actual needs have materialized.

3. The obligation of the Government is limited.

4. It permits stocks to be maintained at minimum levels, and allows direct shipment to the user.

The indefinite quantity contract should be used only when the item or service is commercial or modified commercial in type, and when a recurring need is anticipated.

(b) Orders. Orders placed under indefinite delivery type contracts shall contain, consistent with the contract terms, the following information:

1. Date of order.

2. Contract number and order number.

3. Item number and description, quantity ordered, and contract price.

4. Delivery of performance date.

5. Place of delivery or performance (including consignee).
6. Packaging, packing, and shipping instructions, if any.
7. Accounting and appropriation data.
8. Any other pertinent information.

3.3.2.2 Agreements. Agreements are not contracts; however they represent forms or types which can be used to procure required services. Described below are two types which can be used.

(1) Basic agreement. A basic agreement is a written instrument of understanding, executed between a department or procuring activity and a contractor. This agreement sets forth the negotiated contract clauses which shall be applicable to future procurements entered into between the parties during the term of the basic agreement. The use of the basic agreement contemplates the coverage of a particular procurement by the execution of a formal contractual document which will provide for the scope of the work, price, delivery, and additional matters peculiar to the requirements of the specific procurement involved. It shall incorporate by reference or by appending the contract clauses agreed upon. Basic agreements may be used with fixed-price or cost-reimbursable type contracts.

(a) Applicability. Basic agreements are appropriate for use when past experience. and future plans indicate that a substantial number of separate contracts may be entered into with a contractor during the term of the basic agreement, and if substantial recurring negotiating problems exist with a particular contractor.

1. Modifications. A basic agreement shall be modified only by a modification of the basic agreement itself and shall not be modified or superseded by individual contracts or purchase orders entered into under, and subject to, terms of such basic agreement. To minimize modification, revisions to ASPR involving changes in authorized contract clauses utilized in basic agreements will provide appropriate direction with respect to any required modifications of basic agreements and to the extent possible, modifications will be required only in matters resulting from changes in statutes or Executive Orders As a minimum, basic agreements shall be reviewed annually before the anniversary of their effective date and revised to conform with the current requirements of this Regulation. Modifications shall not be retroactive.

2. Discontinuance. Basic agreements shall provide for discontinuance of their future application upon 30 days written notice by either party. Discontinuance of basic agreement will not affect any individual contract referencing the basic agreement (or the clauses appended thereto) entered into prior to the effective date of discontinuance.

3. Overhead rates. Basic agreements may include negotiated overhead rates for cost-reimbursement type contracts (see ASPR 3-705 (f)).

4. Subsequent procurements. A basic agreement shall cover all subsequent procurements which fall within its scope. Provisions of the basic agreement, including supplements, shall be incorporated into the formal contractual document covering the particular procurement by referencing the number of the basic agreement and each of its supplements. The reference "Basic Agreement No. _____, as amended," shall not be used.

5. Supplemental agreement. Except as provided below when an existing contract is amended to effect new procurement, the supplemental agreement shall:

a. Incorporate the most recent basic agreement, including its supplements, to apply only to the work added by the supplemental agreement; or

b. If it is in the interest of the Government, incorporate the most recent basic agreement, including its supplements, to apply to the entire contract as of the date of the supplemental agreement. An existing contract may be amended by a supplemental agreement effecting new procurement without incorporating the most recent basic agreement

only if all clauses then required by statute, Executive Order, and this Regulation, are included in the contract or the proposed supplemental agreement. Supplemental agreements negotiated pursuant to the terms of an existing contract and not involving new procurement may, if determined to be in the interest of the Government, amend the existing contract to conform to a subsequently executed or supplemental basic agreement.

6. Clauses. Clauses pertaining to subjects not covered in a basic agreement but applicable to the contract being negotiated shall be included in the contract as if no basic agreement existed. Where a clause which was included in the basic agreement pursuant to a deviation must be replaced by a revised clause, the revised clause may deviate to the same extent as the original clause if the revision is not related to the deviation, and if the deviation has not expired or been rescinded.

7. Contract definitization. If a letter contract has been entered into under a basic agreement, which later was superseded by a new basic agreement, or amended by a supplemental agreement, the contractual instrument which definitizes such letter contract shall incorporate the superseding basic agreement, or supplemental agreement, as applicable. If the basic agreement has been terminated without being superseded, or has expired, the definitive contract which supersedes the letter contract shall incorporate the clauses required by statute, Executive Order, or this Regulation.

(b) Content and form. Basic agreements shall contain a set of "General Provisions." These general provisions shall include two groups of clauses. The first group, identified as "Part A," shall include all of the clauses made mandatory by statute, Executive Order, or the Armed Services Procurement Regulation for use in negotiated Government contracts, and shall be made a part of each formal contractual document. The second group, identified as "Part B," shall consist of clauses which may be made a part of each formal contractual document, depending upon their applicability to the particular procurement. The format shown in Figure 3-7 may be adapted to fit specific circumstances.

(c) Limitations. Basic agreements shall neither cite appropriations to be charged nor to be used alone for the purpose of obligating funds. They shall not in any manner provide for or imply any agreement on the part of the Government to place future orders or contracts with the contractor involved, nor shall they be used in any manner to restrict competition. Basic agreements generally shall be utilized only in connection with negotiated contracts.

(2) Basic ordering agreement. A basic ordering agreement is an agreement which is similar to a basic agreement. It also includes however, a description (as specific as practicable) of the supplies to be furnished or services to be performed when ordered, and a description of the method for determination of the prices to be paid to the contractor for the supplies or services. Either the specific terms and conditions of delivery, or a description of the method for their determination, shall be set forth in the basic ordering agreement. The basic ordering agreement shall list one or more activities which are authorized to issue orders under the agreement. Any activity so named may issue orders specifying the supplies or services required. Orders shall be issued on DD Form 1 155 or Standard Form 26 and shall incorporate by reference the provisions of the basic ordering agreement. When it is desired to use the "fast pay" procedure for orders not in excess of $2,500, the special data required by ASPR 3-606.3 (b) shall be included in the basic ordering agreement. The clause in ASPR 3-606.3 (b) (iv) shall be modified for this purpose to refer to orders and to the appropriate clause of the basic ordering agreement for the preparation of invoices. The basic ordering agreement shall specify the point at which each order becomes a binding

BASIC AGREEMENT BETWEEN

THE UNITED STATES OF AMERICA AND _____.

This Agreement is entered into as of the _____ day of _____ 19____ between the United States of America, hereinafter called the "Government", represented by the Contracting Officer, _____ and _____, a corporation organized and existing under the laws of the State of _____, hereinafter called "Contractor".

The clauses and provisions of Parts A and B hereinafter set forth have been agreed upon by the parties hereto for use in negotiated _____ _____ type contracts and in letter contracts contemplating conversion to _____ type contracts, between parties, entered into on or after the date of this Agreement, and prior to its termination. It is further agreed that (i) the clauses and provisions set forth in Part A are mandatory clauses and shall, by reference or attachment, be incorporated in each contract awarded pursuant to this Agreement, and (ii) the clauses and provisions set forth in Part B are to be similarly incorporated in such contracts only when applicable and agreed to by the parties for each individual contract.

This Agreement, including Parts A and B hereof, may be amended only by mutual agreement of the parties, and the Agreement may be terminated in its entirety by either party upon thirty (30) days written notice to the other party, except that this Agreement may be terminated by the Government at any time if the parties fail to agree upon any deletion, amendment or addition to this Agreement which is required by statute, Executive Order or the Armed Services Procurement Regulation. No deletion, modification, addition to, or termination of, this Agreement shall affect any contracts theretofore entered into between the parties in which this Agreement or a portion thereof has been incorporated by reference.

This Agreement shall be reviewed, as a minimum, annually before the anniversary of its effective date, and revised to conform with all requirements of statutes, Executive Orders, or the Armed Services Procurement Regulation. This revision shall be evidenced by an agreement modifying this Basic Agreement or by the issuance of a superseding Basic Agreement.

This Agreement shall not be referred to by the Contractor in bids submitted in response to invitations for bids nor become a part of any contract placed through the process of formal advertising.

IN WITNESS WHEREOF, the parties hereto have executed this Agreement as of the day and year first above written:

UNITED STATES OF AMERICA

By_____
(Contracting Officer

_____
(Name of Company)

By_____

_____
(Title)

FIGURE 3-7
Format for Basic Agreement

contract. For example, the agreement may provide either: (a) that issuance of an order gives rise to a contract immediately; (b) that a contract arises upon the contractor's failure to reject the order within a specified number of days; or (c) that a contract arises when the contractor accepts the order in a specified manner, such as by postcard, telegram, letter, signing and returning a copy of Standard Form 26 or DD Form 1155.

(a) Applicability. The basic ordering agreement may be used to expedite procurement where specific items, quantities, and prices are not known at the time of execution of the agreement but where past experience or future plans indicate that a substantial number of requirements for items or services of the type covered by the basic ordering agreement will result in procurements from the contractor during the term of the agreement. Under proper circumstances, use of the procedures under the agreement is advantageous and economical in ordering parts for equipment support since such procedures substantially shorten the administrative time required for placing such articles in a production status, thereby not only decreasing the amount of support inventory required to be carried but also decreasing the possibility that parts procured will become obsolete as a result of design changes in the equipment.

(b) Limitations. Basic ordering agreements shall in no way provide for or imply any agreement on the part of the Government to place future orders or contracts with the contractor involved, nor shall they be used in any manner to restrict competition. Supplies or services may be ordered under a basic ordering agreement only under the following circumstances:

1. If it is determined, when the order is placed, that it is impracticable to obtain competition by either formal advertising or negotiation for such supplies or services; or

2. If, after a competitive solicitation of quotations or proposals from the maximum number of qualified sources other than a solicitation accomplished by use of Standard Form 33, it is determined that the successful proposer holds a basic ordering agreement, the terms of which are either identical to those of the solicitation or different in a way that could have no impact on price, quality or delivery, and if it is determined further that issuance of an order against the basic ordering agreement rather than preparation of a separate contract would not be prejudicial to the other offerors.

(In situations covered by 2. above, the firms to be solicited shall be chosen in accordance with normal procedures, without regard to which firms hold basic ordering agreements. Firms not holding a basic ordering agreement shall not be precluded by the solicitation from proposing or quoting; the existence of a basic ordering agreement shall not be precluded by the solicitation from proposing or quoting; and the existence of a basic ordering agreement shall not be a consideration in source selection.)

3. The Government shall neither make any final commitment nor authorize any work by the contractor pursuant to an order under a basic ordering agreement until prices have been established, unless the order establishes a monetary limitation on the obligation of the Government, and either:

a. The order is subject to provisions contained in the basic ordering agreement which set forth adequate procedures for arriving at prices as early in contract performance as practical, but in no event shall such procedures permit the price of the entire order to be established on a retroactive basis (however, incentive provisions consistent with this part are permitted); or

b. The need for the supplies or services is compelling and of unusual urgency. An example could be when the Government would be seriously injured, financially or otherwise, if the supplies or services were not furnished by a certain date, or if they could not be

furnished by that date if the contractor is not allowed to proceed with work until prices have been established. The circumstances listed in ASPR 3-202.2 are indicative of instances in which the contractor may be permitted to proceed with work prior to establishment of prices.

(c) Pricing. As a general rule, prices should be established prior to authorizing the contractor to begin work. However, where the contractor is allowed to begin work prior to pricing in accordance with this paragraph, the contractor and the contracting officer shall proceed with pricing as soon as practicable. The basic ordering agreement shall provide that failure to reach agreement on price in such circumstances will constitute a dispute subject to the procedures of the Disputes clause.

(d) Negotiation authority. Each order issued under a basic ordering agreement shall cite the applicable negotiation authority and shall be subject to such reviews, approvals, determinations and findings (including those pertaining to types of contracts), and other requirements (including those pertaining to synopsis of the proposed procurement and contract awards) specified in this Regulation as would be applicable if the order were a contract entered into apart from the basic ordering agreement.

(e) Modification. A basic ordering agreement shall be modified only by a revision of the basic ordering agreement itself and shall not be modified or superceded by individual orders. To minimize modifications, revisions to ASPR involving changes in authorized contract clauses, utilized in basic ordering agreements shall provide appropriate direction with respect to any required modifications of basic ordering agreements; and, to the extent possible, modifications shall be required only in matters resulting from changes in statutes, or Executive Orders. Basic ordering agreements shall be reviewed at least annually, and revised to conform with the current requirements of this Regulation. Modifications shall not be retroactive.

(f) Compliance with provisions. The contracting officer issuing an order under a basic ordering agreement shall be responsible for assuring compliance with the provisions of (b) through (d) above.

3.3.3 Guidelines for Contract Selection. The type of "task oriented" contract selected, to meet particular needs under specific circumstances, involves the exercise of good judgment. Types of contracts must be considered together with pricing procedures in accordance with ASPR 3-803. Because these types of contracts normally are negotiated, the statutory basis should be selected in accordance with ASPR Section 3, Part II. The guidelines set forth below are excerpted from ASPR Section 3, and are offered as basic factors which should be considered in choosing the proper type of contract:

3.3.3.1 Price analysis. (See ASPR 3-807.2 (b).) Price analysis may provide a basis for selection of contract type. The degree to which price analysis can provide a realistic pricing standard should be carefully considered, even where there may not be full and free competition.

3.3.3.2 Cost estimate. In the absence of effective price competition and where price analysis is not sufficient, the cost estimates of the offeror and of the Government are the basis for negotiation of many pricing arrangements. As a minimum, the uncertainties involved in performing at the cost estimated, and their possible impact on costs, must be identified and evaluated so that a pricing arrangement can be negotiated which imposes a reasonable degree of cost responsibility upon the contractor. The following are some of the considerations which may influence the estimate and hence, the selection of contract type:

(1) Type and complexity of the item.

(2) Stability of design, which in turn may influence such subordinate considerations as the adequacy and firmness of specifications, and the availability of relevant historical pricing data and prior production experience

(3) Prospective period of contract performance and length of production run at the time of negotiation.

(4) Extent and nature of subcontracting contemplated.

(5) Adequacy of the contractor's estimating system.

3.3.3.3 Urgency of the requirement. In certain procurements, the best interests of the Government may dictate that the urgency of the requirement be a primary consideration in selection of contract type.

3.3.3.4 Accounting system. Before reaching agreement on price and contract type, it should be determined if the contractor's accounting system will permit timely development of all necessary cost data in the form required by the specific contract type contemplated. This may be particularly critical where the contract type requires revision of price while performance is in progress, or where a cost-reimbursement type of contract is being considered and all current or past experience with the contractor has been on a fixed price basis.

3.3.3.5 Other concurrent contracts. If performance under a proposed procurement involves operations which concurrently are required in performance of other work, the nature of the pricing arrangements on the other work may be important in selecting the contract type for the proposed procurement. This factor may not be so important where close controls exist that will assure proper allocation of costs.

CHAPTER 4. CONTRACTING

4.1 PLANS. Plans for contract construction in future contingencies can be based upon three different sets of in-country conditions, namely (1) contracting in a country whose economic structure is almost completely agrarian, and whose local contracting capability is extremely limited, (2) contracting in a country where substantial amounts of local contracting capability exists, and (3) contracting in a highly industrialized nation where there is an ample number of local contractors experienced in construction. Under any set of conditions, plans should be made to use lump sum contracting (or sub-contracting) with indigenous firms to the maximum extent feasible. For large and/or complex construction programs plans should be developed to accomplish the bulk of construction (aside from that being accomplished by troops) through use of a single contract of the cost reimbursable type in order to provide better centralized control of resources, and to provide flexible response as may be necessary. Mobilization can be effected immediately as directed by the construction agent, and construction can commence prior to completion of plans and specifications. The contractor's level of capability can be tailored to meet the changing requirements of the program; workload mix can be altered; and the contractor can be used, if necessary, to provide material and/or technical support to military units or lump sum contractors. Under certain circumstances, efforts and operations should be consolidated even further through use of the "turnkey" type of approach, wherein all design, engineering and construction is accomplished under a single contract of the cost reimbursable type. Use of this approach would provide for more centralized management, which has proven to be desirable in contingency situations. Further, it would provide for better phasing of engineering and design work with the construction; it would require less OICC effort, and consequently less staff, to handle contract administrative matters; and it should provide for better overall response and control. The final decision on whether to use a U.S. firm as a management entity to coordinate a joint venture of local contractors, to use a U.S. firm as a prime contractor who recruits and controls his own total resources, or to use more than one prime contractor, is one which must be made at the time of need, and in consonance with the military/political conditions prevailing at that time. Contingency plans for a particular type or method of contract can be developed only in the most general form. The method and type of contracting will involve a substantial degree of judgement, and will be more dependent on the nature of the work rather than the place where the work is to be performed. There are some guidelines however, described below, which will aid in developing plans and making determinations.

4.1.1 Contractor Information. The EFD (or OICC) must maintain a complete listing of all potential qualified contractors capable of performing overseas construction. In this regard, Command Headquarters maintains files or some information on all such contractors. To supplement this information, the EFD and OICC should maintain current files on contractors by solicitation from contractors, descriptive brochures and completed data shown on DD Form 1072, Construction Contractor Experience Data, Standard Form 129 Bidders Mailing List Application, and Standard Form 25 1, U.S. Government Architect-Engineer Questionnaire.

4.1.2 Labor Information. Current information should be maintained also by the EFD and OICC on the availability of the skilled, semi-skilled, and unskilled labor that would be required to support a construction program in certain foreign nations where NAVFAC has been designated as the DOD construction agent. Generally, it can be expected that Lump Sum contracts will be used in those localities which have an adequate supply of the labor skills required in addition to the other considerations of equipment and financial resources, and these contracts will probably be accomplished by indigenous construction contractors. However, in a situation characterized by an urgent program in a locality lacking in adequate labor skills, a decision will be necessary on whether to import the additional required skills from either a third country, or the United States, or some mix of the two. In such a situation, it is highly probable that the work will be accomplished under a cost reimbursable type contract. Accordingly, it is essential that the Engineering Field Divisions responsible for overseas construction, and the OICC's stationed in foreign nations, continually keep abreast of the labor market in the localities under their cognizance. Thus, they will (1) be prepared to provide a responsive construction requirement, and/or (2) assist another OICC in recruiting required skills from his area to meet deficiencies in the former's area if it is finally determined that contractor employment of third country nationals will be required. Information to be updated and expanded as appropriate, is contained in Appendix Q. The information presented shows the following countries under LANTDIV cognizance: Iceland, Spain, Morocco, and Indian Ocean Area. Under cognizance of PACDIV, the countries consist of Thailand, Laos, Cambodia, Republic of Vietnam, Territory of Guam/ Trust Territory of the Pacific Islands (TTPI), Indonesia, Federation of Malaysia, and Republic of the Philippines.

4.1.3 Method of Contracting. Only two methods of contracting are permitted by statute, as implemented by the ASPR- -Negotiation and Formal Advertising. With regard to overseas areas, contracting normally is accomplished through negotiation procedures. However, overseas construction may be procurred by formal advertising, provided that the Head of the Procurring Activity (Commander, Naval Facilities Engineering Command) or his designee, determines that the use of formal advertising is practicable and advantageous to the United States as to a specific country or other geographic area outside of the United States, its possessions, and Puerto Rico. (ASPR 18-102). Depending on nature and necessity of speed of accomplishment of work (which is oftentimes controlling), maximum use of formal advertising will be used. Negotiation techniques will be held to a minimum. Authority to negotiate contracts will be granted on a case-by-case basis only on permission from Command Headquarters.

4.1.4 Type of Contract. There are two basic types of contracts, either of which may be selected- -Fixed Price and Cost Reimbursable.

4.1.4.1 Fixed Price. These type contracts involve formal advertising, which means procurement by competitive bid and award, as described by Section II of ASPR and the Contract Administration Manual, NavFac P-68. They include firm Fixed Price contracts, and Indefinite Delivery type contracts (that is, Definite Quantity type, Requirements type, and Indefinite Quantity type- -see paragraph 3.3). Formal advertising involves the following main steps:

(1) Preparation of the invitation for bids, describing the requirements of the Government clearly, accurately, and completely, but avoiding unnecessarily restrictive specifications or requirements which might unduly limit the number of bidders.

(2) Publishing the invitation for bids, through distribution to prospective bidders, posting in public places, and such other means as may be appropriate, in sufficient time to enable prospective bidders to prepare and submit bid before the time set for public

opening.

(3) Submission of bids by prospective contractors.

(4) Awarding the contract, after the bids have been publicly opened to that responsible bidder whose bid, conforming to the invitation for bids, will be the most advantageous to the Government, price and other factors considered. (ASPR 2-101).

4.1.4.2 Cost reimbursable. For a full discussion of this type contract, see NavFac P-398, "Cost Reimbursable Construction Contract Manual."

4.2 COST REIMBURSABLE CONTRACTOR PERSONNEL. Every effort should be made to insure that only the most competent U.S. contractor personnel are obtained for cost reimbursable type contracting. Third country national (TCN) and indigenous personnel should be used to the maximum extent feasible; and potential labor relations problems should be recognized and provided for.

4.2.1 Incentives for U.S. Personnel. To obtain more capable U.S. contractor personnel, one of the efforts might be to examine, and change as necessary, employment contracts with a view toward providing more incentive. For instance, consideration might be given to providing such additional benefits as:

(1) Bonus - lump sum/applied on individual basis.

(2) Remote site differentials.

(3) PX privileges or contractor store.

(4) R&R (at designated times - depending on area). (Consider as incentive in contract renewal.)

(5) Provide sick leave/annual leave payment in lieu of leave.

(6) Insurance under group policy.

4.2.2 Third Country Nationals. Even though there may be problems in obtaining third country nationals for use in contingency construction, the effort expended is considered worthwhile because adequate numbers of necessary skills may be obtained at costs less than for U.S. personnel. The problems which may be expected involve interfaces between (1) responsibilities of in-country, local government agencies for labor matters, and for granting visas (or other forms of clearances) and work permits, (2) U.S. Embassy policies and participation in actions involving employment of third country nationals, (3) U.S. joint military command policies, directives, and participation in labor matters, and (4) labor agreements with governments or agencies of the third country nationals involved. There may be requirements to work through a special U.S./local Government "counsel" established for resolution of interface labor problems. Although the basic responsibility for obtaining and employing third country nationals is vested in the contractor and the construction agent, U.S. Embassy participation should be obtained for support where responsive action is necessary. The Embassy can help obtain waivers of local immigration and movement laws, and provide guidance in the "meshing" of various ethnic groups, Third Country Nationals, in general, should be provided approximately the same benefits with wage scale adjusted to country of origin and/or source of recruitment. Recognition by additional wage payment for work performed on recognized TCN holidays should be considered.

4.2.3 Indigenous Personnel. There will no doubt be requirements in any foreign country to use local labor to the maximum extent. This is desirable, not only from the standpoint of obtaining required labor in short time frames, but in promoting training in construction skills and management which will foster economic development of the country upon termination of the contingency. Training programs must be established in the early stages of construction, however, to reap benefits from the use of local labor. Arrangements should be made with the foreign government, also in the early stages of construction, to obtain

uniform standards and procedures which concern labor, security clearances, work permits, use of hiring halls, conditions of employment, wage scales, etc. U.S. Embassy assistance should be sought in (1) arranging quick movement and hiring of personnel, and (2) in providing guidance on application of the various labor laws governing the employment of local personnel.

4.2.4 Labor Relations Matters. The Armed Services Procurement Regulation, Chapter 6-902, sets forth necessity for review of international agreements in placing a contract outside the United States. Labor requirements in most instances will be referenced in such agreements. Irrespective of contents of such agreements, effort must be expended to obtain information concerning customs and practices that may effect U.S. employees, as well as third country national and local national employees.

4.2.4.1 Clarification. Before contractor employment of personnel, the following items should be clarified:

(1) Responsibilities of in-country, local government agencies for labor matters which include such items as:

(a) Work permits.

(b) Health standard/medical exams.

(c) Wage setting authority.

(d) Recruitment/employment policies.

(2) Use of U.S. Embassy Labor Attache in matters relating to host country labor policies, including:

(a) Wage schedules. (TCN and local wage schedules must be discussed with the Embassy to establish uniformity of approach by all U.S. agencies operating within the geographical area/or area of the contingency construction. Every effort must be made to establish guide wage/salary schedules that will eliminate proselytizing of personnel between contractors which can escalate wage rates.)

(b) Visa/clearances/work permits. (Clarification and standardization of procedures should be coordinated with the U.S. Embassy, and costs, if any, should be established looking toward long-term agreements.)

(3) Policies of U.S. Joint Military Command, if applicable. This will involve participation to insure uniform standards and procedures within the military complex on matters such as conditions of employment, wage scales, work permits, and training, regardless of whether or not U.S. Embassy control is established.

4.2.4.2 Assistance. NAVFAC has Labor Relations personnel to assist initially in the development of contract requirements of "labor" planning. However, immediate recruitment should be initiated for the Labor Relations positions in order to accomplish the interfacing between the OICC - Embassy - Military Commands and host country. The Labor Relations Advisors at Western Division and Chesapeake Division are designated as sources of immediate temporary help in support of contingency construction programs.

4.3 DREDGING. If dredging is indicated to be a firm requirement, dredging capability should be mobilized immediately near the area of operations, whether it be U.S. or foreign. CONUS dredges can be mobilized at a later date to replace foreign dredges, time and availability permitting. In this respect, the Corps of Engineers maintains a list of dredges available throughout the world; this list should be used to determine procurement of dredges. Complete guidelines for procurement and management of a dredging program are contained in Appendix R.

CHAPTER 5. ENGINEERING

5.1 SCOPE. This chapter describes policies and procedures which cover engineering problem areas under NavFac cognizance, such as: (1) engineering intelligence; (2) design and engineering support; (3) base and site development planning; (4) utility systems; and (5) prefabricated structures.

5.2 ENGINEERING INTELLIGENCE. Engineering intelligence type Information is maintained and updated by various agencies and commands in unified command areas and at Washington Headquarters offices, such as Army Map Service, Coast and Geodetic Survey, Navy Oceanographic Office, CIA and DIA. Although NAVFAC's participation as a collection agent is minimal, NAVFAC does compile information for its own use, as well as for others. Because full use must be made of all available information for effective operations during contingencies, NavFac, at all organization levels, must maintain (1) liaison and coordination with the agencies which collect and analyze intelligence information, and (2) widely disseminate available information to military planners on a current and continuous basis. In this respect, NAVFAC Instruction 3820.1 (shown by Appendix S) applies.

5.3 DESIGN AND ENGINEERING SUPPORT. In future contingencies which require extensive design and engineering support, it can be expected that adequate engineering resources will not be available within the Civil Service system for assignment to an OICC staff. Reliance, therefore, must be placed upon employment of personnel through a contractual arrangement to meet OICC staffing requirements, not only in the design and engineering fields, but other critical areas as well.

5.3.1 "Turnkey" Approach. For better overall response and control, there may be situations where it would be desirable to have engineering and design support provided under the cost reimbursable aspects of a single construction contract, that is, the "turnkey" approach.

5.3.2 A-E/E-S Cost Reimbursable Contract. Where situations do not permit the "turnkey" approach, there should be a single Architectural-Engineering/Engineering Services (A-E/E-S) contract, of the cost reimbursable type, for provision of design and engineering support. This type of flexible contract will accomplish the bulk of all design, as well as respond to the OICC staffing requirements. Under this arrangement, the available U.S. Civil Service design and engineering personnel (supplemented by Third Country National engineers, who should be used (if possible), would be free to monitor the design and construction program, to prepare special standards, and accomplish "crash" design. Traditionally, work on a cost reimbursable basis has been accomplished by the construction contractor having complete responsibility for design and construction, or the design accomplished by separate contract awards to competent A-E firms. A single A-E/E-S cost reimbursable type contract for accomplishing all the work would be a departure from this traditional approach. Therefore, the decision to use such a contract will be made on the Command level, with appropriate submittal of its justification from the cognizant EFD.

5.3.3 Alternatives. As an alternative to the arrangement where one A-E/E-S contract is used, it may be advisable to have two such contracts, one for specific design tasks and the

other for support of OJCC staffing requirements. In execution of a smaller program which may not warrant cost reimbursable type A-E/E-S contracts, a single A-E/E-S firm for accomplishing all work at a given base should be considered.

5.3.4 Selection and Award. Policies and procedures for selecting A-E/E-S firms, and awarding the contracts, are to be in compliance with Section 18, Part 4. of ASPR. and paragraph 3.3. (For convenient reference, the applicable portion of ASPR has been reproduced and shown by Appendix T.)

5.3.5 A-E/E-S Capability Considerations. In a military contingency situation which requires the construction of new facilities in any geographic area, overseas or within the continental United States, wherein the Department of Defense has designated the Commander, Naval Facilities Engineering Command as the design and construction agent, consideration must be given to the capabilities of the A-E/E-S firms which will provide the necessary support services and, in some instances, to augment and supplement the In-house force available to the OICC. This capability is directly related to: (1) the size of the program; (2) the type of construction, such as for harbors, airfields or cantonments; (3) the urgency of construction, for example, the rapidity with which plans and specifications must be completed; (4) the degree to which prefabricated structures and/or standard designs will be used; (5) time allowed for design; and (6) use of TCN's.

5.3.5.1 Program size. The size of the program relates both to the scope of work involved and the funds which have been provided to accomplish that scope. For example, ten million dollars might be assigned for improvement of a single harbor, or the same amount may be assigned for required improvements at two or more separate harbors, each of which involves different types of work. In the former instance, the plans and specifications may be accomplished by a single A-E/E-S firm having an adequate number of the various specialties required to prepare all necessary documents within the time frame allowed. In the second instance, two or more firms may be employed, each requiring an adequate number of technically competent personnel, and the total number of personnel involved in the design/ engineering support effort will be greater.

5.3.5.2 Type of construction. The types of construction will have a direct bearing on the technical specialties involved in the A-E/E-S support effort. Obviously the design of airfield pavements will require different skills than those required for design of barracks, water treatment/distribution Systems, or cantonments.

5.3.5.3 Urgency. The urgency of design normally will vary directly as the urgency of construction. A requirement for a relatively early BOD usually is accompanied by a requirement that plans and specifications be provided in time to permit an early construction start date, and this will require enlarged staffing of the A-E/E-S organizations employed for the work. Stated another way, the personnel strength will vary inversely with the time allowed to produce plans and specifications.

5.3.5.4 Standard designs and structures. The degree to which standard designs and/or prefabricated structures will be used, directly affects the number and type of technical specialties required on the staff of A-E/E-S organizations. A standard barracks design will require only site adaptation, and thus permit the A-E/E-S firm involved to reduce to a minimum, the number of specialized architectural, structural, mechanical and/or electrical personnel on its staff. Prefabricated buildings, each of which will be used for different purposes, may eliminate the need for architectural and structural personnel, but will require electrical and mechanical personnel to design those elements peculiar to the use of each building. In all cases (whether individual designs, standard designs, or prefabricated structures designs), site adaptation involving topography and earthwork, access and paving,

and utilities distribution will be required. These matters are closely interrelated to site development plans, which are in turn, the functional responsibility of the sponsor/base commander.

5.3.5.5 Design time. On the average, it can be expected that a period of three to six months will be required to produce plans and specifications of sufficient refinement to permit construction to begin. Fundamentally, the program is first defined by stating the various elements. the scope of each, and the funds assigned (or authorized) for construction. The design of each element can then proceed based on the criteria prescribed by the sponsor and/or the design agent. From these considerations, it becomes immediately apparent that the design agent must, in order to have adequate design support ready and available in a timely manner, have fore knowledge of the program, access to sponsor criteria, and the necessary authority to obtain some form of contractural arrangement with one or more A-E/E-S firms. The selected firm(s) must then be advised of these matters in order to allow adequate time to organize a staff, arrange for necessary office spaces, and take other necessary actions. Slippage in construction starts can be expected if design support is inadequate, either or both in quantity and quality of technical specialities.

5.3.5.6 Use of Third Country Nationals. Employment of TCN’s in the planning/design effort overseas can produce highly acceptable work at considerable savings in cost because of favorable wage/salary differentials when compared with U.S. counterparts. TCN’s in many instances, are thoroughly familiar with design criteria and standards of the U.S. armed services. Usually, they will be easier to recruit for employment in localities outside their own country than U.S. personnel, thus permitting A-E/E-S firms to more rapidly build up their staffs with competent personnel. Consideration must be given to inter-country agreements regulating the employment of TCN's by U.S. Firms, including agreements with the host country. The recruitment of U.S. personnel to staff an OICC’s In-house design engineering organization will be encumbered by regulations and statutes governing Civil Service employees. This may be complicate further by the reluctance of otherwise well qualified personnel to accept employment overseas at wage scales authorized for Civil Service employees, particularly if active military operations are being conducted near the place of employment. The net result is delay in acquiring an adequate staff with a concommitant requirement for increased A-F/F-S capability.

5.3.6 Recurring Reviews. Irrespective of types of contractual arrangements for providing design and engineering support, there should be a recurring review of strength requirements in this field against needs of any oncoming program. Thus, plans for phased contraction or expansion of such support can be developed, and implemented at the appropriate time without abrupt termination or over acceleration.

5.4 BASE AND SITE DEVELOPMENT PLANNING. "Base development planning” normally entails the planning for bases in support of unified command operational plans. "Site development planning" signifies detailed base layout plans form which final drawing and specifications can be prepared; it is not the same, nor does it reflect the extensive details and planning effort involved in "master planning" which is a part of the peacetime Shore Facilities Planning and Programming System. NAVFAC’s role in planning for contingencies is two-fold; it concerns only the facilities planning or the engineering/facilities aspects, as distinguished from logistics determination/planning which is a responsibility of the operational command. First, NAVFAC has the assigned Navy base development plans based upon mobilization/contingency plans, and second, NAVFAC must provide technical assistance to Navy commands as required in the mobilization/contingency site development planning effort. Although the functional responsibility for accomplishing site development planning normally is vested in sponsors commands,

which may or may not involve NAVFAC and the OICC, responsibility and relationship of the OICC to the planning effort must be clearly described at the outset of any contingency.

5.4.1 Base Development Planning. The need for preparing realistic contingency base development plans is emphasized. Although most of the items addressed below involve NAVFAC headquarters, and field (FFD) personnel involved in preparing base development plans, there are some involvements on the part of the OICC.

5.4.1.1 Contract effort. Workload requirements which exceed existing capabilities can be alleviated through contracts with appropriate A-F/F-S firms. A typical contract can require the firm to furnish all services necessary for the preparation of a base development plan. The substance of the contract lies within the scope of work or services to be furnished, pertinent portions of which consist of the following:

(1) Introduction - Covers work/services necessary for accomplishment of the Base Development Plan.

(2) Services to be furnished - Completion of text to follow "Outline for a Base Development Plan."

(3) Criteria and guides - Applicable references as appropriate, such as: (a) Navy Support Plan (NSP) (S); (b) NWIP 11-23(A); (c) Table of Advanced Base Functional Components; (d) Catalog of Advanced Base Initial Outfitting Lists (Abridged); (e) Detailed Catalog of Equipment and Construction Material requirements for Advanced Base Functional Components; and (f) Planning Navy Advanced Bases - NAVFAC P-385.

(4) Work Schedule - Date when work to commence, and dates for manuscript draft and final submissions of BDP's.

(5) General - A miscellany of date/information not covered elsewhere.

(6) Security - Provisions in Department of the Navy Security Manual for Classified Information apply.

5.4.1.2 A-E/E-S firms. Currently, there are five known A-F/F-S firms which have the necessary qualifications for preparing base development plans. They are: (1) McGaughy, Marshall and McMillan, A Professional Association; (2) Reynolds, Smith and Hills, Architects-Engineers-Planners; (3) Louis Berger, Inc.; (4) Wall Corporation, Consulting Engineers; and (5) Bernard Johnson Engineers, Inc., Engineers-Architects-Planners.

5.4.1.3 Contractor facilities. Base development planners should consider disposition of contractor materials, equipment, and facilities such as material depots, shops and camps. It is likely that all or a portion of the contractor forces will be phased out before the military construction units. In this case much of the contractor materials and equipment will be turned over to troop forces for use, or disposed of under provisions of surplus property disposal directives or regulations of the applicable joint command. If significant contractor support facilities are required, they should be planned and sited so that they can satisfy a portion of the military facility requirements upon abandonment by the contractor. The OICC should review and approve the proposed siting of the contractor plant facilities to insure that they are located in agreement with the site or master plan of the camp.

5.4.1.4 Utilities. Planning for utility services should commence with base development planning. Such planning should reflect an "upgrading" of utility systems from the "tactical" to the semi-permanent type, and then to the more permanent type which would include central systems such as central power plants and central sewage disposal plants. Although most of the "tactical" or "theater of operations" type of utilities exist as equipment which is organic to deployment of troop units, their life expectancy is considered to be temporary in nature; thus, there will probably be a requirement for replacement. Planned replacement should be in the form of equipment with larger capacity and of more

permanent nature than the tactical equipment. Implementation of such plans would, of course, depend upon indicated length of tenure of U.S. forces in the country. Plans for development of all systems (whether permanent or semi-permanent facilities are involved) should reflect standardization of such items as power generation and distribution voltages, so that 'stocks" of transformers, generators, etc., can be ordered and prepositioned for use as required. The base planner must be able to visualize the complete base development with its interrelated elements in their proper perspective. This involves engineering considerations for each facility including provisions for possible future expansion. Once this is done, utility systems may then be planned and facilities accordingly adjusted as flexibility permits. The planning approach taken at this point will be governed largely by the type of construction and tactical situation which is anticipated. For example, if the anticipated tactical situation permits, and the base is to be relatively permanent, then the utilities should be planned on a centralized utility systems basis, whenever possible. However, if the anticipated tactical situation does not permit the preceeding approach, or the base is to be of a very temporary nature, then base planning would necessitate consideration of a decentralized type of utility system. This approach is compatible with the use of functional components, because each facility usually includes utilities. Should the situation change, development of a common base (centralized) utility system would then be accomplished at a later date, probably during the base consolidation phase. There are several items, listed below, which are applicable to utilities planning.

(1) Standards of construction. Standards of construction should be established to insure uniformity of construction quality throughout the area of operations. The basic principle in establishing standards is to provide the required facilities at the least cost in resources for the expected duration of use. Long-life material may be utilized for short term requirements provided increased cost in resources do not result. While standards are primarily reflected in quality and durability of the constructed facility, they will have a definite impact on living and working conditions. Utilities such as running water, water-borne sewage, and power must be included in standards because of their impact on living and working conditions and on cost in resources. In accordance with the concept of constructing for a useful life consistent with the expected duration of use, construction standards should be specified in two or more classes related to duration of use. Suggested classes are as follows:

(a) Field - for activities whose missions require that they move frequently. These facilities should be provided on a minimum basis, consisting of little beyond those which can be established using field equipment.

(b) Intermediate - for activities which can be expected to move infrequently, in which case some facility improvement beyond that which can be accomplished with field equipment is warranted.

(c) Temporary - for activities which can be expected to operate from a stable facility for the duration of the hostilities, thereby warranting a relatively long term degree of facility life.

Proposed standards for any theater are subject to prior approval of the Secretary of Defense. They should be developed routinely as an element of advanced base development planning. While certain facilities normally would be considered for only the highest class of standards, they should be authorized as an exception only when fully justified. Examples are running water and sewage treatment and disposal for medical facilities, and power for air conditioning ADP and communication installations. In addition, when appropriate, the standards policy should specify or prohibit the use of certain materials and construction practice, depending on climatic factors, costs, availability of material locally, adequacy and

capability of indigenous skills, and impact on the local economy. It should be emphasized that classes of standards are based on the military situation, environment, anticipated duration of use, contractor capability, latest developments in prefabricated and prepackaged functional components, and cost consideration. As these factors change, a corresponding change in standards should be made. (Figure 5-1 provides further guidance in determining standards for these common use utilities.)

FACILITY	TEMPORARY	INTERMEDIATE	FIELD
Electricity	Central power and high voltage distribution system.	Non-tactical generators (low voltage distribution).	TOE Generators
Water Supply	Central treatment plant; piped water distribution.	Point Supply with limited distribution to mess halls, latrines/showers, & medical facilities.	Point Supply
Sewage	Waterborne	Waterborne for mess halls & dispensaries. Other facilities same as field.	Burn-out or pit latrines

FIGURE 5-1
Standards of Construction for Utilities

(2) Location planning. Planning for the location of utilities is related to the function and operating requirement. The selection of a suitable site generally means finding an area within the prescribed geographical limits where the hydrographic and topographic characteristics are compatible with the assigned operating requirements. Some of these factors are as follows:

Geographic location
Area requirements versus availability of real estate
Topography and hydrography
Soil characteristics
Accessibility
Drainage
Availability of existing facilities particularly utilities
Suitability for defense
Availability of local materials
Proximity to cities

Suitable areas within the objective area are usually limited. If other military services are involved, consideration must be given to the proper allocation of areas to each service in order to provide support to those activities for which the service is responsible. If the requirements of the services are in conflict, the area commander evaluates the requirements of each and allocates areas so as to ensure the most effective overall development of the base area. When considering sites on foreign soil where the host nation also has support require-

ments, the area or joint commander must resolve any overlapping conflicts. Frequently, where a base is being established near an already existing community installation and where utility services and other facilities are already currently available to some degree, only minor construction and rehabilitation of structures may be required to make suitable existing facilities usable to satisfy the base mission needs. Adaptation of local service installations may be adequate for initial base use. If the support operation involves joint base occupancy by other services together with the Navy, the assignment of construction forces to provide joint support facilities will be a responsibility of the joint commander of construction forces. It is probable that no site available will ever have all the desirable qualifications to make it an ideal location. Compromises will have to be made with emphasis on obtaining the more important characteristics for each facility. Schematic plans of the site selected and allocated for base development should indicate full utilization of all space provided within the site boundary.

(3) Design characteristics. Design requirements for utility systems should include the following characteristics:

(a) Standardization among the Services.

(b) Commercially available off4he-shelf items to the maximum extent possible.

(c) Mobility and durability consistent with the function to be performed.

(d) Flexibility to satisfy both forward and rear area requirements.

(e) Economically recoverable as practicable for reuse at other locations.

(f) Adaptable to use in multiples to meet a broad range of requirements.

(g) Minimum in-country construction requirements.

(h) Minimum maintenance.

(4) Functional components. The magnitude of the support required for present day military operations makes it imperative that the most efficient method of base development planning and construction be developed and followed. One of the ways to achieve this, and consequently more efficient support of contingency operations, is through increased use of prepackaged, prefabricated and prestocked functional components. DOD policy states that a maximum of facility requirements in an area of contingency operations will be met through the utilization of functional components. In planning advanced bases, prefabricated and prepackaged functional components should be considered for the broadest spectrum of requirements. Particularly appropriate, are those type requirements which are repetitive in nature significant in numbers, and applicable to all services. The following utilities are cited as prime examples.

(a) Electrical Power. Package units of varying capacity, both low and high voltage, together with all necessary items such as transformers, switch gears, control panels, distribution lines, and insulators. These would be designed to cover typical area and installation requirements, for instance, depots and cantonments, and be capable of employment in multiples.

(b) Water Systems. Complete system and equipment for production, treatment, storage, distribution and use, for instance, hospitals and cantonments, capable of employment in multiples.

(c) Sewage Treatment. Package treatment plants based on various levels of population of specific type facilities for instance, hospitals and cantonments.

Criteria for determining utility plant sizes are contained in NAVFAC P-385, Planning Navy Advanced Bases.

(5) Commercial Facilities. When the base population figure exceeds 5,000 total, or when the base facility support area exceeds one square mile (640+ acres), it is

recommended that utilization, including expansion, conversion and/or rehabilitation of the existing commercial utility facilities (power, water, sewage) be undertaken in lieu of installation of additional multiples of initial ABFC units. For example, too many individual electric units on line increase problems of synchronization and distribution/transmissions requirements; individual water purification/distillation multiples require larger pipe sizes and pumps, and are therefore infeasible economically, and inefficient.

(6) Base loadings. The recommended method of forecasting utility base loadings is to apply the planning factors shown by Figure 5-2, using judgement as necessary for special situations against projected mission/base loading, and allocating space for the anticipated expansion.

Electrical Utilities	
Major Air Bases	1.5 KW/MN
Other Bases/Cantonments	0.7 KW/MN
Deep Draft Berth	200 KW/Berth
Shallow Draft Berth	0.5 KW/Ft. of Berth
Drydock	100 KW/Dock
Water Supply	**Water Storage**
100 GPD/MN	50 GPD/Man
50,000 GPD/Deep Draft Berth	
100 GPD/BD	**Sewage Treatment**
	80% of Water Supply

FIGURE 5-2
Planning Factors for Utilities

5.4.2 Site Development Planning. Experience has demonstrated a need to have, during execution of the contingency, three segments in the site development planning organization of an in-country command: (1) programming and requirements, (2) site planning, and (3) contingency/advance planning. Although all segments of the organization require experienced personnel in adequate numbers to perform their assigned functions, the site planning segment, in particular, requires personnel who are highly specialized, as well as broad experienced, because they will be involved with contingency plans, real estate acquisition, coordination and liaison with sponsors on land use, program development, and preliminary engineering. To fill any void in staffing which might arise during contingency execution, provision should be made to allow staffing of the in-country site development planning organization with contract personnel. "Task oriented" type contracts, as described in paragraph 3.3, should be used, if possible.

5.5 PREFABRICATED STRUCTURES. Prefabricated structures have been found to offer solutions to a wide variety of functional purposes. Such structures can be specifically designed for ease of shipment, handling, and erection. They may:

(1) Be just as economically procured and erected as constructing more "austere looking" types.

(2) Offer the advantage of quicker response to construction requirements if already prestocked or prepositioned.

(3) Solve many of the problems in determining construction standards.

(4) Result in less expenditures entering the International Balance of Payments. It is a foregone conclusion that all construction requirements in contingency situations cannot be met totally through use of prefabricated structures. Their usefulness in any specific situation will depend on a number of factors, including on-site resources, availability of trained construction forces, extent of stockpiling and pre positioning, production capability and transportation. However, it is considered that extensive use of these structures will be made, and thus, plans should be developed accordingly. Appendix U provides a listing of current applicable specifications and manufacturers for prefabricated structures.

CHAPTER 6. MATERIEL

6.1 CONTROL. When cost reimbursable contracts are used to accomplish construction, control over material and equipment, (materiel) from the Point of Embarkation (POE) to incorporation into construction projects, cannot be over emphasized. There are several concepts, methods or procedures, (described below) which should be considered. Each should be analyzed thoroughly in consonance with the situation prevailing at the time, and detailed plans of execution developed which are based upon adoption of a single or combination of concepts to insure positive materiel control.

6.1.1 Staffing. Emphasis must be placed upon staffing those material control elements of both the OICC and contractor organizations with an adequate number of qualified personnel (not only in-country, but stateside as well). Extensive use should be made of qualified personnel attached to NAVSUP, CNM, CBC's and construction contractor's organizations to help fill the existing NAVFAC void of personnel experienced in material inventory and control.

6.1.2 Subcontract. Consideration should be given to executing a cost reimbursable type sub-contract of the management type, under the prime construction contractor, for handling the entire system of material procurement, inventory, issue, accounting, and control.

6.1.3 Construction Support Depot. The management capability existing in the Construction Battalion Centers should not be overlooked in providing support not only for the NCF's, but the construction contractor as well. Even though it may not be advisable to have the CBC act as procurement agent for the construction contractor, there may be merit in having the CBC establish, at the outset of mobilization, an in-country organization to manage and control material depots for both the NCF's and the contractor. This organization, under the title of "Construction Support Depot," can be established and operated initially as a Navy organization or activity; Advanced Base Functional Components (ABFC's) may be used for the facilities portion. Later, the depot can be turned over to the contractor for his operation. Guidance on this is contained in Appendix V.

6.1.4 DCSC. The Defense Construction Supply Center (DCSC) should be used for materiel support. For instance, consideration might be given to have DCSC stock common long lead material and equipment, such as electric wire, switch panels, generators, air conditioning equipment and pumps. This stock could be used on initial buys and may place DCSC in a better position to provide follow-on support. In order to make effective use of DCSC, communications, liaison and coordination at all levels between DCSC and NAVFAC must be established and maintained.

6.1.5 Control System. A standard material procurement, tracking, receipt, inventory and issue system must be developed, programmed in a universal machine language, and directed for use under the basic contract. The system should be developed to operate manually but be converted into the standard machine system when volume justified. Requirements and details on this are set forth in NAVFAC P-398, "Cost Reimbursable Construction Contract Manual."

6.2 SOUTHEAST ASIA MATERIAL (SEAMAT). Military construction in contingency operations requires acquisition of a very large variety of construction materials, many of

them in large quantities, and many others in very small quantities. It is likely that these materials will have to be acquired in the shortest time possible. At the same time, however, the minimum quality needed must be assured, and the greatest economy under the circumstances must be considered. When contingency construction is carried out by contract, the contractor may acquire these materials through the Federal stock system, or he may procure them directly in-country, in the United States, or in a third country. Some items are best obtained through the stock system. Maximum use of standard stock items is encouraged. However, there are many valid reasons for not using the stock system for all materials or at all times. The reasons may include, but are not limited to: (1) certain materials normally are not procured or stocked in the supply systems; (2) the supply system is not sufficiently responsive; (3) supply items include unnecessary or unusable features; and (4) ASPR limitations on supply system procurement practices seriously hamper the acquisition. The contractor, then, will require some flexibility in selecting his method of purchase. In-country supply will be adequate for some materials. Third-country availability of certain materials will prove to be most advantageous on occasion. By far the majority of materials, however, are likely to be supplied by direct contractor procurement in the United States. Thus, to provide better response in terms of a major material procurement by the construction contractor, a system termed Southeast Asia Material (SEAMAT) has been developed by NAVFAC. The system couples identification of materials in designs and materials take-offs with a means for rapid, accurate, abbreviated transmission of material requirements for procurement. The system uses the Standard SC-1 construction specification format as a basis. The SC-1 contains a brief statement of the material's intended use and service life, a short specification suitable for competitive purchase and inspection, and a separate listing of proven sources of supply, including manufacturers and model numbers.

6.2.1 OICC. Because the OICC is responsible for design and construction of facilities, any good criteria, which will assure adequacy and reasonable cost, will be useful to him in controlling selection of material to be used. SEAMAT is one of those criteria. It shows the availability of materials by listing a number of verified sources. The OICC can require his staff, AIE contractors and the cost reimbursable construction contractor(s) to use SEAMAT for selection and procurement of materials. As the need arises, the OICC can request from NavFac, coverage of materials not now included in SEAMAT, and continuous updating of all materials and sources therein.

6.2.2 In-Country Designer. The OICC staff and all A/E contractors engaged in design work must select materials to accomplish the design. If the materials are not specifically identified in the design drawings or specifications, the identification must be made by the construction contractor. Such identification may not coincide with the intentions of the designer. SEAMAT supplies an extensive list of materials, together with information to aid in selection. It also provides a numerical identifier for a selected material, which can be incorporated into the drawings and specifications. The full use of SEAMAT at this stage will speed up all subsequent operations in the process of translating design into a constructed facility. Accurate and rapid take-off can be accomplished; accurate and rapid communication of desired purchases can be effected; competitive procurement of standard commercial products can be made, with a basis for determining suitable quality; and accurate identity of materials after receipt in-country can be accomplished easily. Therefore, OICC insistence on the use of SEAMAT in the design is of great importance to its maximum effectiveness.

6.2.3 In-Country Contractor Staff. If the design is complete, and SEAMAT has been used for material selection and identification, the cost reimbursable construction contractor has an easy job of making his material take-off. With incomplete design information, however,

he must anticipate material requirements, or guess at the designer's intention. For those materials to be purchased in CONUS, he must then transmit the requirements to his U.S. purchasing office. Without use of SEAMAT, he is forced to select from an extensive file of manufacturer's catalogs, which usually renders his communications of requirements incomplete. This limits the opportunities for his U.S. office to procure competitively or to make suitable substitutions when necessary for rapid response. SEAMAT provides information to assist in proper selection, identifies the materials selected, and promotes simplified, accurate communication of requirements.

6.2.4 Contractor's CONUS Staff. The U.S. purchasing office must often purchase a variety of materials in great quantity, and with all possible speed. A clear understanding of the requirements eliminates lost motion in deciding what products are desired, and in initiating procurement actions. Documentation of procurement requirements is provided. If the requisitioner identifies an item to SEAMAT, he thus identifies its intended use, and documentation is automatically provided by SEAMAT, suitable for competitive procurement and with means for determining compliance. SEAMAT lists some manufacturing sources, and identifies products which meet the requirements. The purchasing office thus has a good start in initiating the procurement.

6.2.5 ROICC. It is the responsibility of the ROICC to assure effective response to the contractor's purchasing organization, and to evaluate the contractor's fee. Using SEAMAT, the ROICC can easily determine what is required in-country, and can compare the products actually procured against those requirements. He also has a basis for evaluating the extent to which the purchasing office takes advantage of competition in procurement. In addition, the ROICC can spot gaps in SEAMAT coverage and request remedial action.

6.2.6 Instructions. At the appropriate time, NAVFAC will issue instructions on use of SEAMAT for construction accomplished through cost reimbursable contract(s). (See Appendix W.)

6.3 FEDERAL STOCK NUMBERS (FSN). Material and equipment, procured by the cost reimbursable contractor, probably will become available before, or at the close of contract operations. The redistribution of these assets may well pose problems unless adequate procedures are established beforehand. To alleviate some of the potential problems, consideration should be given to having the contractor identify, or cross-reference, his materiel procurements to Federal Stock Numbers (FSN's) to the maximum extent possible at the time of procurement. Catalogs or listings of the unused assets, with meaningful identification for screening by potential recipients of the materiel, can then be prepared and distributed. This matter is treated in NAVEAC P-398.

6.4 EQUIPMENT. Special procedures and other measures, applicable to both the OICC and cost reimbursable contractor, are necessary for effective control, repair, and overhaul of equipment. These are set forth in NAVFAC P-398.

6.5 CBL VERSUS GBL. Cost reimbursable contractors may use either Commercial Bills of Lading (CBL's) or Government Bills of Lading (GBL's). A study (Appendix X) on CBL's versus GB L's concerns CONUS transportation only, and covers the movement of material and equipment from manufacturing plants to the point at which the Government assumes physical responsibility. This type of transportation is known as "First Destination." Although the study may appear to endorse CBL's, the OICC should not direct its exclusive use. There will be instances when it will be more advantageous, and possibly necessary, to ship material on GBL's, for example, during domestic transportation strikes. The Department of Defense (DOD) has a standing strike plan for moving DOD cargo during transportation strikes, and shipments moving on GBL's are readily identifiable as Government

cargo; thus, they usually are given special consideration. In other instances, there will be economic or service advantages to be gained by the Government which may be available only if GB L's are used Ideally, material and equipment should be shipped on GB L's OR CBL's, whichever is most advantageous for the Government. Evaluations must be made on a case-by-case basis.

CHAPTER 7. SUPPORTING SERVICES

7.1 SCOPE. The OICC and the cost reimbursable contractor require many varied services during construction. Some are provided by military departments or armed services, DOD agencies, Federal agencies, and if overseas, foreign governments and their agencies. Examples may include land, air and water transportation; cargo handling; use of operational and industrial/commercial facilities; and security. These services may be with or without charge. The nature, extent, and cost of services provided will depend on various assigned agency/Service responsibilities, Inter-Service Support Agreements, inter-agency agreements, and in some cases, on country to country agreements. When required services cannot be provided by others, even though within their assigned responsibilities or in accordance with agreements, the OICC and the contractor must arrange for their own support. For instance, (1) air lift support may have to be provided by contract; (2) LST and other type small craft may have to be procured through loan, charter or other means; (3) ramps and piers for off loading contractor cargo may have to be constructed by the contractor; and (4) cargo handling services may have to be provided by the contractor to meet his own needs. There are other types of support, strictly between the contractor and the OICC, which may be required. This latter type includes contractor provision to the OICC of ADP services, office services, office spaces, communications, maintenance and operations of OICC facilities (including utilities), and other services as may be required and directed by the OICC. Because of their importance, and the fact that most other items of support are or will be addressed separately, prior to or at the time of need, only three items are discussed in this chapter--airlift, automotive vehicles, and ADP (which includes reporting).

7.2 AIRLIFT SUPPORT. Normally, one of the military Services will be responsible for airlift support; however, priority on use of available aircraft for the military may take precedence over support to the contractor. In these cases, the OICC should direct the contractor to obtain air transportation, through subcontract or charter, for support of both the contractor and the OICC. The OICC will have to assist the contractor in obtaining any necessary in-country approvals, such as those which might be required from agencies of the foreign country government. Such airlift services should be continued until the designated military Service, or other agency, can assume the responsibility.

7.3 AUTOMOTIVE VEHICLES. Passenger carrying and non-passenger carrying automotive vehicles, for OICC administrative use in managing construction contracts, are properly procured by the Navy, and provided as "Navy owned" vehicles, through use of SIOH (Supervision, Inspection and Overhead) funds. Current legislation, policies and procedures permit rental, through use of SIOR funds, of passenger carrying vehicles from a construction contractor. However, unless excepted, SIOH funds may not be used by a construction contractor to procure "Navy owned" vehicles for OICC use; requests for exception, along with appropriate justification, are to be submitted to NAVFAC headquarters for action.

7.4 ADP AND REPORTING. An ADP operation can prove invaluable in cost reimbursable contracting, from the standpoint of savings in manual operations and responsiveness in data preparation and computation. It has been used for payroll operations, material control, preparation of cost reports, cash flow control, overall contract control, CPM, and various types of status reporting. Experience has demonstrated a necessity for having

early ADP capability in future, large construction undertakings. The capability should be exploited to the maximum extent practicable to provide management information and to minimize the civilian clerical effort. The development of ADP programs should begin with analysis of daily operations to identify elements of the construction execution which warrant and lend themselves to use of ADP capability. The accounting system should be probably the first element to be mechanized. From there, the program should be expanded to eventually encompass all practical computer applications. In the installation of new or expanded computer capability, in or out of country, equipment and systems must be carefully selected to assure compatibility with systems and equipment already in use. Back-up support, in an accessible area removed from any combat zone, will be required.

7.4.1 Responsibility. In consonance with, and as discussed in NAVFAC P-398, the responsibility for providing ADP (or computer) capability, for both the OICC and the cost reimbursable contractor, should be given to the contractor. However, close liaison between both organizations must be maintained to insure that systems development, programs, data base establishment, reporting, and operations are compatible with OICC requirements.

7.4.2 Status Reporting. In addition to various accounting and other types of reports, various sorts of construction status reports will be required for detailed construction management at the site of work, and for overall management of programs at higher levels. ADP capability to accomplish such reporting probably will be required. Current formats and data requirements are shown by Appendix Y. The formats shown are the basic ones from which various sorts can be extracted; they are in addition to those normally required under the NAVEAC 2318/2319 MCON reporting system.

CHAPTER 8. COST ESTIMATING

8.1 COST ESTIMATING MANUAL. Because of high level interest which can be expected in the planning, programming and execution of contingency construction, the OICC should develop a cost estimating manual in the early phases of operations, and update it on a recurring basis. This will provide more realistic data upon which to base programming actions. Sponsors will be able to use uniform estimates of costs for "like" facilities; much of the guesswork in estimating costs will be eliminated; and there will be less possibility of "underfunding" actions based upon poor estimates of costs. Development and continual updating of the cost estimating manual will provide also, a basis for historical "tracking" of the cost of construction.

8.2 ESTIMATING PROCEDURES. Procedures for deriving various types of estimates, as described below, are for the OICC's use in managing contingency construction and its related activities.

8.2.1 Types of Estimates. Cost estimates prepared for construction programs are generally of three basic types: (1) budget estimates; (2) cost control engineering estimates; and (3) final engineering estimates. They should be prepared to the degree of detail compatible with the criteria available, using standard forms approved by the OICC. The types of estimates are defined as follows:

(1) Budget estimates - Cost estimates for planning, programming and budgeting include the engineering estimate.

(2) Control engineering estimates - Control estimates should be prepared when the A-E submits the 50 percent preliminary design. These estimates should be accurate within limits of the information available. Estimates should include detailed cost estimate breakdowns for all definitive criteria available, and reasonable cost estimates for other items for which criteria is not detailed or complete.

(3) Final engineering estimates - A final construction estimate should be prepared by the A-E/OICC when the engineering and design of a project has been completed. This estimate will represent the total direct construction cost of the project or facility.

8.2.2 Procedures. The procedures set forth below provide a uniform method for use in the quantitative analysis and pricing of work involved for construction of a project or facility. Applicable terms are defined as follows:

(1) Take-Off. Includes analysis and development of data from plans. specifications, sketches and other criteria pertaining to a specific project, and the reduction of such data to a standard list of definitive units of measure for pricing.

(2) Criteria. Signifies drawings, specifications, sketches, data, calculations, assumptions, etc., which form the basis for an engineering estimate or study and for construction of a project or facility.

(3) Materials. Includes the substances, elements, and items, either commercial or specially manufactured, required by the plans and specifications for incorporation as integral parts of the completed. project. Not included are tools equipment usage, and consumable items such as water and fuel, which are cited as indirect expenses or support, depending on the end use of the estimate.

(4) Labor. Includes the physical effort. expressed in man-units, required to accomplish the construction of a specific project within a presumed schedule and plan.

(5) Equipment usage. Includes the mechanical effort, expressed in equipment units of operating time, required to accomplish the construction of a specific project within a presumed schedule and plan. This does not include installed equipment.

(6) Pricing. The judicious application of estimated costs to the estimated quantities obtained by quantitative analysis and take-off from available criteria.

(7) Quantitative analysis. The analysis of available criteria, and determination of a plausible plan (and/or method of operation) for the construction. The plan or method, reduced to simplest terms, forms a basic part of the estimate.

8.2.2.1 Take-off and consolidation. The requirements of the project or facility, as indicated by the criteria and delineated by the plan and time schedule (that is, "quantitative analysis"), should be reduced to standard definitive units of measure suitable for pricing. All entries on the work sheet (that is, "take-off" sheet) should be made in a systematic manner to assure that all applicable data have been considered and that all or any part of the work can be readily checked.

(1) Labor applicable for each segment of work should be listed. Labor charges are obtained from several sources, all of which are based upon past construction experience.

(2) Material required for each segment of the work should be listed by description and units suitable for pricing.

(3) Equipment usage for each type of equipment should be expressed in standard terms such as machine hours or days, for each detailed segment of work. Equipment normally is estimated on a use rate per unit of time for each type of equipment. Such use rates include the operating cost (fuel, lubricants, maintenance, etc.), and on occasion, the operating cost of labor.

(4) Following the "take-off," quantities of like items should be consolidated. Fractions should be converted to decimals in making the consolidation. Normally, the quantities are consolidated on a "detailed estimate sheet." For a simple job, it may be convenient to omit the use of take-off sheets, and make consolidated entries directly on detailed estimate sheets. Take-off sheets should not be omitted however, unless sufficient clarity is retained to permit checking of the quantity take if.

8.2.2.2 Pricing. Standard, approved estimating forms should be used, and estimates prepared in a degree of detail compatible with the available information. When the estimated cost of a job totals less than $5,000, the estimate may be prepared as a summary sheet only, unless detailed supporting sheets are specifically desired. Unit costs for each type of facility, including all support items, should be computed and entered on the detailed estimate sheet, before placing entries on the estimating form. Costs for all material and installed equipment should be re-checked, and compared with other cost data, for validity.

8.2.2.3 NAVFAC DM-10 and area cost factor. This design manual, "Military Construction Cost Engineering Data," is the basic NAVEAC reference for deriving cost estimates of construction. It delineates geographic cost factors and engineering unit costs by category code, and has been recognized as an accurate vehicle for preparing and reviewing preliminary estimates for public works projects, military construction budgets, and plant inventory. Through application of the appropriate area cost factor, data shown in DM-10 can be used to derive "order of magnitude" estimates for construction in contingencies. The current factor for use is 0.82. The use of this factor, with an engineering estimated cost of $100,000 for a facility to be built in Burma, is set forth in the hypothetical example shown below.

EXAMPLE:

B = Budget Emergency Contingency Cost
EC = Emergency Contingency Cost (1.00 + .82)
E = Engineering Estimated Cost
G = Graphic Cost Factor (1.4)
SIOH = Supervision, Inspection, General Overhead (6%)
C = Contingency (6%)
D = Design and Engineering Services (6%)

The Budget Emergency Contingency Cost is determined by using the following formula:

EC(B) + E(G) + E(SIOH) + E(C) + E(D)
1.82(B) = 100,000(1.4) + 100,000(06) + 100,000(.1) + 100,000(.06)
1.82 B = 140,000+6,000+ 10,000+6,000
1.82 B = $162,000
1.82 B = $162,000 (1.82) B = $294,840

8.2.3 Estimating Guides. In addition to NAVFAC DM-l0, the following publications may be useful in deriving cost estimates:

(1) "National Construction Estimator" by G. Moselle
(2) "Building Construction Cost Data" by R.S. Means Co., Inc.
(3) "Manual of Commercial and Industrial Construction Estimating and Engineering Standards" prepared by International Estimating Services.
(4) "The Building Estimator's Reference Book" by Frank D. Walker
(5) "Commercial - Industrial Construction Costs" by Richardson Engineering Service.

FEDERAL AND DEFENSE AGENCIES USING NAVFAC AS DESIGN/ CONSTRUCTION AGENT

1. Agency for Internal Development (AID)
   Director, Office of Engineering
   2201 C Street, N. W. Washington

2. United States Army
   Deputy Chief of Staff for Logistics
   The Pentagon, Washington, D. C. 20310

3. Advanced Research Projects Agency (ARPA)
   Director of Defense Research and Engineering
   Department of Defense, The Pentagon
   Washington, D. C. 20301

4. Civil Works
   Government owned, Contractor operated industrial plants

5. United States Coast Guard
   1300 E Street, N. W.
   Washington, D. C. 20591

6. Defense Atomic Support Agency (DASA)
   The Thomas Building
   Washington, D. C. 20305
   a. Commander, Joint Task Force Eight
      Sandia Base
      Albuquerque, New Mexico 87115

7. Defense Communications Agency (DCA)
   Eighth Street and South Courthouse Road
   Arlington, Virginia 20305

8. Defense Supply Agency (DSA)
   Cameron Station
   Alexandria, Virginia 22314

9. Environmental Science Services Administration (ESSA)
   6010 Executive Boulevard
   Rockville, Maryland 20852

10. Department of Interior
    a. Director, Bureau of Commercial Fisheries
       C Street between 18th and 19th Streets, N. W.
       Washington, D. C. 20240
    b. Director, Bureau of Sport Fisheries and Wildlife
       C Street between 18th and 19th Streets, N. W.
       Washington, D. C. 20240
    c. Director, Office of Territories
       C Street between 18th and 19th Streets, N. W.
       Washington, D. C. 20240

11. Military Assistance Program (MAP)
    Deputy Assistant Secretary (Military Assistance and Sales)
    The Pentagon, Washington, D. C. 20301

12. National Aeronautics and Space Administration (NASA)
    Washington, D. C. 20546

13. North Atlantic Treaty Organization (NATO)
    United States Mission to the North Atlantic
    Treaty Organization, Brussels, Belgium

14. Department of Health, Education, and Welfare
    a. Director, National Institutes of Health
       330 Independence Avenue, S. W.
       Washington, D. C. 20525

15. Peace Corps
    806 Connecticut Avenue, N. W.
    Washington, D. C. 20301

16. Office of Civil Defense (OCD) The Pentagon Washington, D. C. 20520

17. Department of State
    2201 C Street, N. W.
    Washington, D. C. 20520

18. General Services Administration (GSA)
    General Services Building, 18th and F Streets, N. W.
    Washington, D. C. 20405

19. Veterans Administration (VA)
    Vermont Avenue between H and I Streets, N. W.
    Washington, D. C. 20420

20. United Service Organization, Inc.
    237 East 52nd Street
    New York, N. Y. 10020

21. United States Air Force (USAF)
    The Pentagon
    Washington, D. C. 20330

22. Chief National Guard Bureau
    Air Civil Engineering Division
    The Pentagon, Washington, D. C. 20330

23. Office of Emergency Prepardness
    Executive Office Building Annex
    17th and F Street, N. W.
    Washington, D. C. 20504

OFFICE OF THE ASSISTANT SECRETARY OF DEFENSE
WASHINGTON 25, D.C.

INSTALLATIONS AND LOGISTICS 8 March 1963

MEMORANDUM FOR The Assistant Secretary of the Army (I&L)
The Assistant Secretary of the Navy (I&L)
The Special Assistant For Installations, Office of the Secretary of the Air Force

SUBJECT: Design and Construction in the Far East

Reference is made to the Assistant Secretary of Defense (I&L) memorandum of 14 December 1962 on the above subject, and to your reply thereto. Analysis of the information you submitted, and as developed informally in subsequent conferences, indicates there are certain areas in the Far East where the current and projected workload for design and construction does not warrant the continuance of several construction agencies. As previously indicated, good management of a military construction agency in any area requires a certain minimum volume of business (varying according to types of work and nature and size of area), to perform efficiently. Now work volumes generate high overhead costs and tend towards inefficient utilization of talents which are difficult to obtain and retain.

As is currently the practice in other areas of the Far East, it is considered that also there should be but one design and construction agency for Department of Defense work in Japan, Korea, Taiwan, and Vietnam.

The Army Corps of Engineers with a Far East District Engineer located in Seoul (and an engineering office located in Tokyo) is capable of readily accomplishing all Department of Defense design and construction work in Japan and Korea. It is noted that the Far East District Engineer currently has resident engineers or project offices in Chitose (Hakkaido), Tokyo (Honshu), and Itazuke (Kyushu) in Japan; and at Seoul and Taegu in Korea. Also the Corps of Engineers with a District Engineer in Okinawa, having an engineer resident office in Taipei, is capable of accomplishing the relatively small amount of design and construction work required by the Department of Defense in Taiwan. The Navy Bureau of Yards and Docks with an OICC for South East Asia located in Bangkok, having a resident engineer in Saigon, has the capability of accomplishing all design and construction work in Viet Nam.

The Far East for this purpose is considered to be that area lying west of the date line, north of the equator, and east of Burma. After a thorough review of all aspects of this matter, it has been decided that all DOD design and construction work in the Far East be accomplished by the construction agency designated for each particular area. These designations, effective 1 July 1963 (for work not undertaken by that date, including architect-engineer contracts - Title I-and advertising of bids for construction)[1] are indicated below. The administration of Title II contracts still in effect on 1 July 1963 where a change in responsibility is to take place, will be transferred to the newly designated construction agency for the area. The area designations are:

(1) The Corps of Engineers (Army) for the areas of Japan, Korea, Taiwan, the Ryukyu Islands (Okinawa), and the Marshall Islands.

(2) The Bureau of Yards and Docks (Navy) for the areas of the Philippine Islands, and Mariana Islands (Guam), Thailand, Vietnam, Laos, and Cambodia.

While minor construction and O&M repair and construction type work may be accomplished by the Military Department having the requirement, the use of the area construction agency for this purpose is strongly encouraged.

It is desired that reassignment of design and construction responsibility where required, be accomplished in an orderly manner by effective scheduling of projects in the interim period so as to result in the minimum amount of lost effort both by in-house manpower and that under architect-engineer contract. There is no intention that these decisions will result in a build-up of supervisory forces but rather, due to the tapering off of military construction work in these areas, it is expected that a net reduction in personnel will result.

It is requested that personnel strengths currently employed on design and construction work in the Far East be reported to this office by 15 April 1963.

/s/Edward J. Sheridan
Deputy Assistant Secretary of Defense
(Properties and Installations)

OFFICE OF THE ASSISTANT SECRETARY OF DEFENSE
Washington 25, D. C.

Installations and Logistics
IT

May 22, 1964

MEMORANDUM FOR The Assistant Secretary of the Army (I&L)
The Assistant Secretary of the Navy (I&L)
The Assistant Secretary of the Air Force (I&L)

SUBJECT: Areas of Responsibility for Military Construction Outside the United States

Refs:

(a) DASD (P&I) memorandum, subject: "Design and Construction in the Far East," dated 8 March 1963
(b) DASD (P&I) memorandum, subject: "Construction in Overseas Areas," dated 21 June 1963

In order to assure that design and construction of military facilities are accomplished without duplication of manpower and other resources in areas outside the United States, the following additional geographic area assignments are made pursuant to Department of Defense Directive No. 4270.5, effective 1 July 1964:

Corps of Engineers, Department of the Army

a. Canada (excepting Newfoundland) and Greenland.
b. Europe, including the Azores.
c. North Africa from Morocco to Somali Republic.
d. The Middle East, and Southeast Asia to the western borders of Laos and Thailand.

Bureau of Yards and Docks, Department of the Navy

a. Newfoundland.
b. Iceland.
c. Indian Ocean-Australia-New Zealand, including the island complex north of Australia.
d. Johnson and Midway Islands, and all other Pacific Ocean islands not previously covered under the Far Eastern Area construction assignments.
e. Bermuda and the Caribbean Area, including Puerto Rico and islands in the Caribbean Sea.
f. Down-range stations in the Atlantic and South Atlantic Ocean areas.

The status of the Corps of Engineers, the Bureau of Yards and Docks, and the Air Force with respect to design and construction responsibilities remains unchanged in the United Kingdom, Spain and Panama.

The above area designations apply to projects for which design has not been started by 1 July 1964, and to projects which have not been advertised by that date.

Minor construction and O&M repair and construction-type work may continue to be accomplished by the Military Department having jurisdiction; however, the use of the designated area construction agency is strongly encouraged, especially when the projects are of a size or complexity requiring performance by contract.

It is desired that engineering design and construction scheduling will be adjusted to effect transfers of responsibility with minimum disruption. This office is prepared to assist in easing transfers of responsibility in any cases where this may be necessary.

Pursuant to the DoD-AID agreement, under which the military construction agencies participate in the AID construction program, it is necessary that this office be kept informed of the location and scope of all projects undertaken to assure compatibility with the military construction assignments. Accordingly, it is requested that proposals to accomplish such work for AID be cleared by this office prior to entering upon formal agreements with AID.

With the gradual cutbacks in overseas construction programs, it would appear that reductions in the departmental engineering staffs should be possible in such headquarters locations as London, Wiesbaden, and Madrid with attendant savings in manpower and logistical support. It is requested that every effort be made to economize in these operations.

EDWARD J. SHERIDAN
Deputy Assistant Secretary of Defense
(Properties and Installations)

OFFICE OF THE ASSISTANT SECRETARY OF DEFENSE
Washington 25, D. C.

Installations and Logistics JUN 12, 1964

MEMORANDUM FOR The Assistant Secretary of the Army (I&L)
The Assistant Secretary of the Navy (I&L)
The Assistant Secretary of the Air Force (I&L)

Subject: Areas of Responsibility for Military Construction Outside the United States

Reference is made to memorandum from this office, dated May 22, 1964, same subject as above.

In clarification, the assignment of Newfoundland to the Bureau of Yards and Docks embraces the entire Province, which would include Goose Bay Air Force Base.

The assignment of Europe to the Corps of Engineers should not be construed as setting aside existing Command arrangements for accomplishing design and construction in France and Germany.

/s/ John Heard

for
Edward J. Sheridan
Deputy Assistant Secretary of Defense
(Properties and Installations)

July 28, 1964

MEMORANDUM FOR The Assistant Secretary of the Army (I&L)
The Assistant Secretary of the Navy (I&L)
The Assistant Secretary of the Air Force (I&L)

SUBJECT: Areas of Responsibility for Military Construction Outside the United States

Ref 5:
(a) DASD (P&I) memorandum, subject: "Design and Construction in the Far East", dated 8 March 1963
(b) DASD (P&I) memorandum, subject: "Areas of Responsibility for Military Construction Outside the United States", dated 22 May 1964
(c) DASD (P&I) memorandum, subject: "Areas of Responsibility for Military Construction Outside the United States", dated 12 June 1964

Upon review and reconsideration of existing Corps of Engineers commitments to accomplish military construction at Goose Air Base, and because of COE responsibilities for Arctic operations in this area, it has been determined advisable to reassign this Base to the COE for the accomplishment of military construction work Accordingly, the assignments of Goose Air Base to the Department of Navy, Bureau of Yards and Docks is hereby revoked

All other area assignments remain as set forth in the above-referenced memoranda.

(Signed) Edward J. Sheridan

EDWARD J. SHERIDAN
Deputy Assistant Secretary of Defense
(Properties and Installation)

OFFICE OF THE ASSISTANT SECRETARY OF DEFENSE
Washington, D. C. 20301

INSTALLATIONS AND LOGISTICS 29 Jul 1968

MEMORANDUM FOR THE ASSISTANT SECRETARY OF THE ARMY (I&L)
THE ASSISTANT SECRETARY OF THE NAVY (I&L)
THE ASSISTANT SECRETARY OF THE AIR FORCE (I&L)

SUBJECT: Construction Assignments in the United Kingdom

In accordance with the memorandum from this office dated May 22, 1964 (copy attached) both the European Division, Naval Facilities Engineering Command and the 3rd Air Force are currently administering construction in the United Kingdom (U.K.)

Based on our review of a recent GAO report (OSD Case #2773) which focused attention on the dual responsibility in the U.K., it has been determined that the relatively small volume of planned military construction in that country can most efficiently be administered by one construction agency.

Accordingly, the Department of the Air Force which has the major construction program in the U.K. is hereby designated as the sole construction agent for military construction projects located in that country. In consonance with this action, it is requested that the construction responsibilities of the Naval Facilities Engineering Command in the U.K. be phased out in an orderly manner as soon as practicable.

/s/ Edward J. Sheridan
Deputy Assistant Secretary of Defense
(Properties and Installations)

SPONSOR CONTACTS

1. AGENCY FOR INTERNATIONAL DEVELOPMENT (AID)
   Director, Office of Engineering
   2201 "C" Street, N.W., Washington, D.C. 20523

   AID Functions Thru Five Bureaus; East Asia, Vietnam, Near East and South Asia, Latin America and Africa. AID Country Level U.S. Establishments are located in each of the U.S. Embassies as AID Mission Directors.

2. UNITED STATES ARMY
   Deputy Chief of Staff for Logistics
   The Pentagon, Washington, D.C. 20310

   First United States Army
   Headquarters, Ft, George G. Meade, Maryland
   Area: Maine, New Hampshire, Massachusetts, Connecticut, Rhode Island, New Jersey, New York, Vermont, Pennsylvania, Delaware, Maryland, Virginia, West Virginia, Kentucky (less Ft. Campbell), Ohio

   Third United States Army
   Headquarters, Ft. McPherson, Georgia
   Area: North Carolina, South Carolina, Georgia, Florida, Alabama, Mississippi, Tennessee, Ft. Campbell, Kentucky

   Fourth United States Army
   Headquarters, Ft. Sam Houston, Texas
   Area: Arkansas, Louisiana, Texas, Oklahoma, New Mexico

Fifth United States Army
Headquarters, Chicago, Illinois
Area: Michigan, Wisconsin, Illinois, Missouri, Indiana, Iowa, Minnesota, North Dakota, South Dakota, Nebraska, Kansas, Wyoming, Colorado

Sixth United States Army
Headquarters, Presido of San Francisco, California
Area: Montana, Washington, Oregon, Idaho, Utah, Nevada, Arizona, California

Military District of Washington
United States Army
Headquarters, Washington, D. C.
Area: District of Columbia, and certain adjacent counties of Virginia and Maryland as prescribed.

United States Army Air Defense
Headquarters, Ent Air Force Base, Colorado

United States Army, Europe
Headquarters, Heidelberg, Germany

United States Army, Pacific
Headquarters, Ft. Shafter, Hawaii

United States Army Forces, Southern Command
Headquarters, Ft. Amador, Canal Zone

United States Army, Alaska
Headquarters, Elmendorf Air Force Base, Alaska

United States Army Forces, STRIKE Command
Headquarters, Fort Monroe, Virginia

3. ADVANCED RESEARCH PROJECTS AGENCY (ARPA)
Director of Defense Research and Engineering
Department of Defense
The Pentagon, Washington, D. C. 20301

ARPA Utilizes the services of the Military Departments at field level.

4. CIVIL WORKS

Performs work for the Systems Commands at Government owned, contractor operated industrial plants.

5. UNITED STATES COAST GUARD
1300 "E" Street, N.W., Washington, D. C. 20591

1st District: Maine, New Hampshire, Vermont, Massachusetts, Rhode Island
John F. Kennedy Federal Building
Boston, Massachusetts 02203

3rd District: Connecticut, Eastern New York, New Jersey, Eastern Pennsylvania, Delaware
Governors Island
New York, N. Y. 10004

5th District: Maryland, District of Columbia, Virginia, North Carolina
Federal Building
Portsmouth, Virginia 23705

7th District: South Carolina, Georgia, Florida
Federal Building
Miami, Florida 33130

8th District: Alabama, Mississippi, Louisiana, Texas, New Mexico
Customhouse
New Orleans, Louisiana 70130

11th District: Southern California, Arizona
Heartwell Building
19 Pine Avenue
Long Beach, California 90802

12th District: Northern California, Nevada, Utah
630 Sansome Street
San Francisco, California 94126

13th District: Washington, Oregon, Idaho, Montana
618 Second Avenue
Seattle, Washington 98104

14th District: Hawaii
1347 Kapiolani Boulevard
Honolulu, Hawaii 96814

Second District: North Dakota, South Dakota, Wyoming, Nebraska, Ohio, Western Pennsylvania, West Virginia, Colorado, Kansas, Oklahoma, Arkansas, Missouri, Kentucky, Tennessee, Iowa, Minnesota, Wisconsin, Illinois, Indiana

Federal Building
St. Louis, Missouri 36103

Ninth District: Great Lakes Area
1240 E. 9th Street,
Cleveland, Ohio 44199

U. S. Coast Guard Academy
New London, Connecticut 06320

U.S. Coast Guard Yard
Curtis Bay, Baltimore, Maryland 21226

U.S. Coast Guard Training Center (N.Y,)
Governors Island
New York, New York 10004

U. S. Coast Guard Training Center (N.J.)
Cape May, New Jersey 08204

Reserve Training Center
Yorktown, Virginia 23490

U.S. Coast Guard Aircraft Repair and Supply Center
Elizabeth City, North Carolina 27907

U. S. Coast Guard Activities - Europe
Box 50
FPO New York, N. Y. 09510

6. DEFENSE ATOMIC SUPPORT AGENCY (DASA)
The Thomas Building
Washington, D. C. 20305

Commander Joint Task Force Eight
Sandia Base
Albuquerque, New Mexico 87115

Armed Forces Radiobiology Research Institute
Bethesda, Maryland

7. DEFENSE COMMUNICATIONS AGENCY (DCA)
Eighth Street and South Courthouse Road
Arlington, Virginia 20305

White House Communications Agency

Defense Commercial Communications Office

Defense Communications Engineering Office

System Engineering Facility

National Military Command System Support Center

8. DEFENSE SUPPLY AGENCY (DSA)
Cameron Station, Alexandria, Virginia 22314

Defense Construction Supply Center
Columbus, Ohio

Defense Electronics Supply Center
Dayton, Ohio

Defense Fuel Supply Center
Alexandria, Virginia

Defense General Supply Center
Richmond, Virginia

Defense Personnel Support Center
Philadelphia, Pennsylvania

Defense Documentation Service Center
Alexandria, Virginia

Defense Industrial Plant Equipment Service Center
Memphis, Tennessee

Defense Logistics Services Center
Battle Creek Michigan

DSA Administrative Support Center
Alexandria, Virginia

Defense Depot Mechanicsburg
Mechanicsburg, Pennsylvania

Defense Depot Memphis
Memphis, Tennessee

Defense Depot Ogden
Ogden, Utah

Defense Depot Tracy
Tracy, California

Defense Contract Administration Services Region
Atlanta, Georgia

Defense Contract Administration Services Region
Boston, Massachusetts

Defense Contract Administration Services Region
Chicago, Illinois

Defense Contract Administration Services Region
Cleveland, Ohio

Defense Contract Administration Services Region
Dallas, Texas

Defense Contract Administration Services Region
Detroit, Michigan

Defense Contract Administration Services Region,
Los Angeles, California

Defense Contract Administration Services Region
New York, New York

Defense Contract Administration Services Region
Philadelphia, Pennsylvania

Defense Contract Administration Services Region
San Francisco, California

Defense Contract Administration Services Region
St. Louis, Missouri

9. ENVIRONMENTAL SCIENCE SERVICES ADMINISTRATION (ESSA)
6010 Executive Boulevard Rockville, Maryland 20852

Eastern Weather Bureau Region: Connecticut, Delaware, Maine, Maryland, Massachusetts, New Hampshire, New Jersey, New York, North Carolina, Ohio, Pennsylvania, Rhode Island, South Carolina, Vermont, Virginia, West Virginia
585 Stewart Avenue
Garden City, Long Island, N. Y. 11530

Central Weather Bureau Region: Colorado, Illinois, Indiana, Iowa, Kansas, Kentucky, Michigan, Minnesota, Missouri, Nebraska, North Dakota, South Dakota, Wisconsin, Wyoming
601 E. 12th Street
Kansas City, Missouri 64106

Southern Weather Bureau Region: Alabama, Arkansas, Florida, Georgia, Louisiana, Mississippi, New Mexico, Oklahoma, Tennessee, Texas, Puerto Rico
Federal Building Fort Worth, Texas 76102

Western Weather Bureau Region: Arizona, California, Idaho, Montana, Oregon, Nevada, Utah, Washington
125 5. State Street
Salt Lake City, Utah 84111

Alaska Weather Bureau Region:
632 6th Avenue, Anchorage, Alaska 99501

Pacific Weather Bureau Region:
1149 Bethel Street
Honolulu, Hawaii 96813

East Coast Field Director, Coast and Geodetic Survey:
Connecticut, Delaware, Florida, Georgia, Maine, Maryland, Massachusetts, New Hampshire, New Jersey, New York, North Carolina, Pennsylvania, Rhode Island, South Carolina, Vermont, Virginia, West Virginia
439 W. York Street
Norfolk, Virginia 23510

Mid-Continent Field Director, Coast and Geodetic Survey:
Alabama, Arkansas, Colorado, Illinois, Indiana, Iowa, Kansas, Kentucky, Louisiana, Michigan, Minnesota, Mississippi, Missouri, Nebraska, North Dakota, Ohio, Oklahoma, South Dakota, Tennessee, Texas, Wisconsin, Wyoming
Federal Building
Kansas City, Missouri 64106

Alaska Field Director, Coast and Geodetic Survey
632 6th Avenue
Anchorage, Alaska 99501

Pacific Field Director, Coast and Geodetic Survey
1149 Bethel Street
Honolulu, Hawaii 96811

Atlantic Coast and Geodetic Survey Marine Center
439 W. York Street
Norfolk, Virginia 23510

Pacific Coast and Geodetic Survey Marine Center
1801 Fairview Avenue, East
Seattle, Washington 98102

10. DEPARTMENT OF INTERIOR
C Street Between Eighteenth and Nineteenth Streets, N.W.
Washington, D. C. 20240

Director, Bureau of Commercial Fisheries
C Street Between Eighteenth and Nineteenth Streets, N.W.
Washington, D. C. 20240

Pacific Region, Bureau of Commercial Fisheries
Arcade Building
Seattle, Washington 98101

Gulf and South Atlantic Region, Bureau of Commercial Fisheries
Federal Office Building
St. Petersburg, Florida 33701

North Atlantic Region, Bureau of Commercial Fisheries
Federal Building
Gloucester, Massachusetts 01930

Great Lakes and Central Region, Bureau of Commercial Fisheries
5 Research Drive
Ann Arbor, Michigan 48103

Alaska Region, Bureau of Commercial Fisheries
Federal Building
Juneau, Alaska 99801

Pacific Southwest Region, Bureau of Commercial Fisheries
300 South Ferry Street,
Terminal Island, California 90731

Hawaii Area, Bureau of Commercial Fisheries
2570 Dole Street
Honolulu, Hawaii 96812

Director, Bureau of Sport Fisheries and Wildlife
C Street Between Eighteenth and Nineteenth Streets, N. W.
Washington, D. C. 20240

Pacific Region, Bureau of Sport Fisheries and Wildlife
730 N.E. Pacific Street, Portland, Oregon 97208

Southwest Region, Bureau of Sport Fisheries and Wildlife
Federal Building
Albuquerque, New Mexico 87103

North Central Region, Bureau of Sport Fisheries and Wildlife
1006 W. Lake Street
Minneapolis, Minnesota 55408

Southeast Region, Bureau of Sport Fisheries and Wildlife
809 Peachtree - Seventh Building
Atlanta, Georgia 30323

Northeast Region, Bureau of Sport Fisheries and Wildlife
U.S. Post Office and Court House
Boston, Massachusetts 02109

Director, Office of Territories
C Street Between 18th and 19th Streets, N. W.
Washington, D. C. 20240

11. MILITARY ASSISTANCE PROGRAM (MAP)

Deputy Assistant Secretary (Military Assistance and Sales)
The Pentagon
Washington, D. C. 20301

12. NATIONAL AERONAUTICS AND SPACE ADMINISTRATION (NASA)
Washington, D. C. 20546

Director, Ames Research Center
Moffett Field, California

Director of Electronics Research Center
Cambridge, Massachusetts

Director Elight Research Center
Edwards, California

Director Goddard Space Flight Center
Greenbelt, Maryland

Director Jet Propulsion Laboratory
Pasadena, California

Director John F. Kennedy Space Center
NASA
Kennedy Space Center, Florida

Director Langley Research Center
Langley Field, Virginia

Director Lewis Research Center
Cleveland, Ohio

Director Manned Spacecraft Center
Houston, Texas

Director George C. Marshall Space Flight Center
Huntsville, Alabama

Manager Space Nuclear Propulsion Office
(Joint AEC-NASA Installation)
Germantown, Maryland

Director Wallops Station
Wallops, Virginia

13. NORTH ATLANTIC TREATY ORGANIZATION (NATO)

United States Mission to the North Atlantic Treaty Organization
Brussels, Belgium

14. DEPARTMENT OF HEALTH, EDUCATION AND WELFARE
330 Independence Avenue, S. W.
Washington, D. C. 20201

I Regional Director: Maine, Massachusetts, New Hampshire, Rhode Island, Vermont
John F. Kennedy Federal Building
Boston, Massachusetts 02203

II Regional Director: Delaware, New Jersey, New York, Pennsylvania
26 Federal Plaza
New York, New York 10007

III Regional Director: District of Columbia, Kentucky, Maryland, North Carolina, Virginia, West Virginia, Puerto Rico, Virgin Islands

220 7th Street, N.E.
Charlottesville, Virginia 22901

IV Regional Director: Alabama, Florida, Georgia, Mississippi South Carolina, Tennessee

50 7th Street, N.E.
Atlanta, Georgia 30323

V Regional Director: Illinois, Indiana, Michigan, Ohio, Wisconsin

433 W. Van Buren Street
Chicago, Illinois 60607

VI Regional Director: Iowa, Kansas, Minnesota, Missouri, Nebraska, North Dakota, South Dakota

601 E 12th Street
Kansas City, Missouri 64106

VII Regional Director: Arkansas, Louisiana, New Mexico, Oklahoma, Texas

VIII Regional Director: Colorado, Idaho, Montana, Utah, Wyoming

19th and Stout Streets
Denver, Colorado 80202

IX Regional Director: Alaska, Arizona, California, Hawaii, Nevada, Oregon, Washington, Guam, American Samoa

50 Fulton Street
San Francisco, California 94102

15. PEACE CORPS
806 Connecticut Avenue, N. W.
Washington, D. C. 20525

Regional Director for Africa
806 Connecticut Avenue, N. W.
Washington, D. C. 20525

Regional Director for East Asia and Pacific
806 Connecticut Avenue, N. W.
Washington, D. C. 20525

Regional Director for Latin America
806 Connecticut Avenue N. W.
Washington, D. C. 20525

Regional Director for North Africa, Near East and South Asia
806 Connecticut Avenue, N. W. Washington, D. C. 20525

16. OFFICE OF CIVIL DEFENSE (OCD)
The Pentagon
Washington, D. C. 20525

Region No. 1: Connecticut, Maine, Massachusetts, New Hampshire, New Jersey, New York, Rhode Island, Vermont, Puerto Rico, Virgin Islands
Federal Regional Center
Maynard, Massachusetts 01754

Region No. 2: Delaware, District of Columbia, Kentucky, Maryland, Ohio, Pennsylvania, Virginia, West Virginia
Olney, Maryland 20832

Region No. 3: Alabama, Florida, Georgia, Mississippi, North Carolina, South Carolina, Tennessee, Canal Zone
Thomasville, Georgia 31792

Region No. 4: Illinois, Indiana, Michigan, Minnesota, Wisconsin
Federal Center
Battle Creek, Michigan 49016

Region No. 5: Arkansas, Louisiana, New Mexico
Oklahoma, Texas
Denton Federal Center
Denton, Texas 76201

Region No. 6: Colorado, Iowa, Kansas, Missouri,
Nebraska, North Dakota, South Dakota, Wyoming
Denver Federal Center
Building 50
Denver, Colorado 80225

Region No. 7: Arizona, California, Hawaii, Nevada, Utah,
American Samoa, Guam
Santa Rosa, California 95403

Region No. 8: Alaska, Idaho, Montana, Oregon,
Washington
Everett, Washington 98201

17. DEPARTMENT OF STATE
2201 C Street N. W.
Washington, D. C. 20520

UNITED STATES EMBASSIES

Abidjan, Ivory Coast

Accra, Ghana

Addis Ababa, Ethiopia

Aden, People[1]s Republic of South Yemen

Amman, Jordon

Ankara, Turkey

Asuncion, Paraguay

Athens, Greece

Bamoko, Mali

Bangkok, Thailand

Bangui, Central Africa Republic

Bathurst, The Gambia

Beirut, Lebanon

Belgrade, Yugoslavia

Bern, Switzerland

Bogota, Colombia

Bonn, Germany

Bridgetown, Barbados

Brussels, Belgium

Bucharest, Romania

Budapest, Hungary

Buenos Aires, Argentina

Bujumbura, Burundi

Camberra, Australia

Caracas, Venezuela

Colombo, Ceylon

Conakry, Guinea

Copenhagen, Denmark

Cotonou, Dahomey

Dar-Es-Salaam, Tanzania

Dakar, Senegal

Djakarta, Indonesia

Dublin, Ireland

Fort Lamy, Chad

Freetown, Sierra Leone

Gaberones, Botswana

Georgetown, Guyana

Guatemala, Guatemala

The Hague, Netherlands

Helsinki, Finland

Jidda, Saudi Arabia

Kabul, Afghanistan

Kampala, Uganda

Kathmandu, Nepal

Kigali, Rwanda

Kingstown, Jamaica

Kinshasa, Congo

Kuala Lumpur, Malaysia

Kuwait, Kuwait

Lagos, Nigeria

La Paz, Bolivia

Libreville, Gabon

Lima, Peru

Lisbon, Portugal

Lome, Togo

London, United Kingdom

Lusaka, Zambia

Luxembourg, Luxembourg

Madrid, Spain

Managua, Nicaragua

Manila, Philippines

Maseru, Lesotho

Mexico, D. F. , Mexico

Mogadiscio, Somali Republic

Monrovia, Liberia

Montevideo, Uruguay

Moscow, Soviet Union

Nairobi, Kenya

New Delhi, India

Niamey, Niger

Nicosia, Cyprus

Oslo, Norway

Ottawa, Ontario, Canada

Ouagadougou, Upper Volta

Panama, Panama

Paris, France

Port-Au-Prince, Haiti

Port- Of-Spain, Trinidad and Tobago

Prague, Czechoslovakia

Pretoria, South Africa

Quito, Ecuador

Rabat, Morocco

Rangoon, Burma

Rawalpindi, Pakistan

Reykjavik, Iceland

Rio de Janeiro, Brazil

Rome, Italy

Saigon, Vietnam

San Jose, Costa Rica

San Salvador, El Salvador

Santiago, Chile

Santo Domingo, Dominican Republic

Seoul, Korea

Singapore, Singapore

Sofia, Bulgaria

Stockholm, Sweden

Taipei, (Taiwan), China

Tananarive, Malagasy Republic

Tegucigalpa, Honduras

Tehran, Iran

Tel Aviv, Israel

Tokyo, Japan

Tripoli, Libya

Tunis, Tunisia

Valletta, Malta

Vienna, Austria

Vientiane, Laos

Warsaw, Poland

Wellington, New Zealand

Yaounde, Cameroon

Zomba, (Balantyre), Malawi

18. GENERAL SERVICES ADMINISTRATION (GSA)
General Services Building
18th and F Streets, N. W.
Washington, D. C. 20405

Regional Administrator, General Services Administration
Region No. 1: Connecticut, Maine, Massachusetts, New Hampshire, Rhode Island, Vermont
620 Post Office and Courthouse
Boston, Massachusetts 02109

Regional Administrator, General Services Administration
Region No. 2: Delaware, New Jersey, New York, Pennsylvania, Puerto Rico, The Virgin Islands
30 Church Street
New York, New York 10007

Regional Administrator, General Services Administration
Region No. 3: District of Columbia, Maryland, Virginia, West Virginia
7th and D Streets, S. W.
Washington, D. C. 20407

Regional Administrator, General Services Administration
Region No. 4: Alabama, Florida, Georgia, Mississippi, North Carolina, South Carolina, Tennessee
1776 Peachtree Street, N. W.
Atlanta, Georgia 30309

Regional Administrator, General Services Administration
Region No. 5: Illinois, Indiana, Kentucky, Michigan, Ohio, Wisconsin
219 South Dearborn Street
Chicago, Illinois 60604

Regional Administrator, General Services Administration
Region No. 6: Iowa, Kansas, Minnesota, Missouri, Nebraska, North Dakota, South Dakota
1500 East Bannister Road
Kansas City, Missouri

Regional Director, General Services Administration
Region No. 7: Arkansas, Louisiana, Oklahoma, Texas
819 Taylor Street
Ft. Worth, Texas 76102

Regional Director, General Services Administration
Region No. 8: Arizona, Colorado, New Mexico, Utah, Wyoming
Building No. 41
Denver Federal Center
Denver, Colorado 80225

Regional Director, General Services Administration
Region No. 9: California, Hawaii, Nevada
49 4th Street
San Francisco, California 94103

Regional Director, General Services Administration
Region No. 10: Alaska, Idaho, Montana, Oregon, Washington
GSA Center
Auburn, Washington 98002

19. VETERANS ADMINISTRATION (VA)
Vermont Avenue between H and I Streets, N. W.
Washington, D. C. 20420

REGIONAL OFFICES

474 South Court Street
Montgomery, Alabama 36104

Post Office Box 1288
Juneau, Alaska

Federal Building
230 N. 1st Avenue
Phoenix, Arizona 85012

Federal Office Building
Little Rock, Arkansas 72201

1380 S. Sepulveda Boulevard
Los Angeles, California 90073

Denver Federal Center
Denver, Colorado 80225

450 Main Street
Hartford, Connecticut 06103

Post Office Box 1266
1601 Kirkwood Highway
Wilmington, Delaware 19899

Post Office Box 1437
St. Petersburg, Florida 33731

730 Peachtree Street, N. E.
Atlanta, Georgia 30308

Post Office Box 3198
Honolulu, Hawaii 96801

5th and Fort Streets
Boise, Idaho 83707

2030 W. Taylor Street
Chicago, Illinois 60612

36 S. Pennsylvania Street
Indianapolis, Indiana 46204

Des Moines, Iowa 50308

5500 E. Kellogg
Wichita, Kansas 67218

1405 West Broadway
Louisville, Kentucky 40201

701 Loyola Avenue
New Orleans, Louisiana 70113

Togus, Maine 04330

St. Paul and Fayette Streets
Baltimore, Maryland 21202

J. F. Kennedy Federal Building
Boston, Massachusetts 02203

210 Gratiot Avenue at Liberty
Detroit, Michigan 48232

Fort Snelling
St. Paul, Minnesota 55111

1500 E. Woodrow Wilson Boulevard
Jackson, Mississippi 39216

Federal Building
St. Louis, Missouri 63103

Fort Harrison, Montana 59636

220 5. 17th Street
Lincoln, Nebraska 68508

1000 Locust Street
Reno, Nevada 89502

497 Silver Street
Manchester, New Hampshire 03103

20 Washington Place
Newark, New Jersey 07102

500 Gold Avenue, S. W.
Albuquerque, New Mexico 87101

252 7th Avenue
New York, New York 10001

301 N. Main Street
Winston-Salem, North Carolina 27101

Fargo, North Dakota 58102

1240 E. 9th Street
Cleveland, Ohio 44199

2nd and Court Streets
Muskogee, Oklahoma 74401

426 5. W. Stark Street
Portland, Oregon 97204

5000 Wissahickon Avenue
Philadelphia, Pennsylvania 19101

APO San Francisco, California,
Philippine Republic 96528

520 Ponce de Leon Avenue
San Juan, Puerto Rico 00901

Federal Building Kennedy Plaza
Providence, Rhode Island 02903

1801 Assembly Street
Columbia, South Carolina 29201

Veterans Memorial Hospital
Sioux Falls, South Dakota 57101

U. S. Courthouse
801 Broadway
Nashville, Tennessee 37203

515 Rusk Avenue
Houston, Texas 77061

125 5. State Street
Salt Lake City, Utah 84111

White River Junction, Vermont 05001

211W. Campbell Avenue
Roanoke, Virginia 24011

Sixth and Lenora Building
Seattle, Washington 98121

502 8th Street
Huntington, West Virginia 25701

342 N. Water Street
Milwaukee, Wisconsin 53202

2360 E. Pershing Boulevard
Cheyenne, Wyoming

20. UNITED SERVICE ORGANIZATION, INC. (USO)
237 East 52nd Street
New York, New York 10022

21. UNITED STATES AIR FORCE (USAF)
The Pentagon
Washington, D. C. 20330

MAJOR AIR COMMANDS Z/I

ADC, Ent AFB, Colorado 80912

AFCS Scott AFB, Illinois 62215

AFLC, Wright-Patterson AFB, Ohio 45433

AFSC, Andrews AFB, Washington, D. C. 20331

ATC, Randolph AFB, Texas 78148

HQ Command, Bolling AFB, Washington, D. C. 20332

USAF REGIONAL CIVIL ENGINEERS (AFRCE[1]S)

Eastern Region
526 Title Building
Atlanta, Georgia 30303

Central Region
1114 Commerce Street
Dallas, Texas 75202

Western Region
630 Sansome Street
San Francisco, California 94111

Canadian Region
Victoria Island
Building 16
Ottawa, Ontario, Canada 00100

22. CHIEF NATIONAL GUARD BUREAU
Air Civil Engineer Division
The Pentagon
Washington, D. C. 20330

23. OFFICE OF EMERGENCY PREPARDNESS
Executive Office Building Annex
17th and F Streets, N. W.
Washington, D. C. 20504

OICC ORGANIZATION NO. 1 (PROPOSED) $100 + MILLION WIP

MANPOWER LISTING

OPNAV FORM 5320/3 S/N-0107-778-9300 REF: OPNAVINST. 5320.2 (SERIES) REPORT OPNAV 5320-2

MARP CODE SEG.	LINE	S/L	ACTIVITY CODE	ACTIVITY NAME	SPONSOR	DEPARTMENT	TRANSACTION NO.	DATE MO.	DAY	YR.	PAGE NO.
							OFF. / ENL.				
01			02	03	04	05	06	07			08

SEQUENCE CODE/ P.D. NUMBER	MILITARY NOBC/ NEC/ MOS	DESIG/ RATE	GRADE	ALLOW-ANCE	BILLET/POSITION TITLE	MIL. OR CIV.	CIVILIAN SERVICE, SERIES GRADE/GROUP	NO. POSI-TIONS	REMARKS
09	10	11	12	13	14	15	16	17	18
					NOTE: Military Personnel are shown for most Administrative Billets. Under mobilization conditions a civilian position might be substituted and this alternative is shown in parentheses with an asterisk.				
					OFFICER IN CHARGE OF CONSTRUCTION				
			RADM	1	OICC				
			LCDR	1	Exec Asst/Aid to the Cdr				
					Secretary (Stenography)		GS-7	1	
			CAPT	1	Deputy OICC				
					Secretary (Stenography)		GS-6	1	
					COUNSEL				
					Attorney Advisor		GS-13	1	
					Initially TAD from an OICC or EFD to ensure personnel familiar with the area.				
					Clerk (Stenography)		GS-4	1	
					REAL ESTATE				
					Initially TAD from an OICC or EFD Await early developments to determine if real estate activity will				

TOTALS	NAVY OFF.	NAVY ENL.	TOTAL NAVY	MARINE OFF.	MARINE ENL.	TOTAL MARINE	TOTAL MIL.	GRADED CIV.	UNGRADED CIV.	TOTAL CIV.	TOTAL MANPOWER
ALLOWANCE/ CEILING											
19	20	21	22	23	24	25	26	27	28	29	30

OP-0181 C-14167

OICC ORGANIZATION NO.1 (PROPOSED) $100 + MILLION WIP

MANPOWER LISTING
OPNAV FORM 5320/3 S/N-0107-778-9300 REF: OPNAVINST. 5320.2 (SERIES) REPORT OPNAV 5320-2

MARP CODE SEG.	LINE	S/L	ACTIVITY CODE	ACTIVITY NAME	SPONSOR	DEPARTMENT	TRANSACTION NO.	DATE MO	DAY	YR.	PAGE NO.
							OFF. / ENL.				
01			02	03	04	05	06	07			08

SEQUENCE CODE/ P.D. NUMBER	MILITARY NOBC/ NEC/ MOS	DESIG/ RATE	GRADE	ALLOW-ANCE	BILLET/POSITION TITLE	MIL. OR CIV.	CIVILIAN SERVICE, SERIES GRADE/GROUP	NO. POSI-TIONS	REMARKS
09	10	11	12	13	14	15	16	17	18
					be of sufficient long term magnitude to merit permanent staff.				
					PUBLIC AFFAIRS OFFICE				
			LT	1	Public Info Officer		(*GS-12)		
					Writer/Historian		GS-12/11	1	
					Editorial Assistant		GS-7/6	2	
					Interpreter		GS-7/6/5	2	
					NOTE: Personnel service will be provided by the Overseas and Returning Placement Staff (ORPS) or the nearest Naval Activity, as appropriate.				
					CIVILIAN PERSONNEL OFFICER				
					Personnel Officer		GS-13	1	
					Personnel Liaison		GS-12	1	
					Personnel Clerk (Typist)		GS-5/4	2	
					MILITARY SERVICES AND SECURITY DIV.				
			LT	1	Military Services & Security Officer				
					Clerk-Typist		GS-3	1	
					COMMUNICATIONS & CLASSIFIED FILES BR.				
			LTjg	1	Communications & Classified Files Officer				
					Travel Clerk		GS-5/4	2	
			RM1	1	Communications Supervisor				

TOTALS	NAVY OFF	NAVY ENL.	TOTAL NAVY	MARINE OFF.	MARINE ENL.	TOTAL MARINE	TOTAL MIL.	GRADED CIV.	UNGRADED CIV.	TOTAL CIV.	TOTAL MANPOWER
ALLOWANCE/ CEILING											
19	20	21	22	23	24	25	26	27	28	29	30

OP-0 C-14187

MANPOWER LISTING

OPNAV FORM 5320/3 S/N-0107-778-9300 REF: OPNAVINST. 5320.2 (SERIES) REPORT OPNAV 5320-2

OICC ORGANIZATION NO.1 (PROPOSED) $100 + MILLION WIP

MARP CODE SEQ.	LINE	S/L	ACTIVITY CODE	ACTIVITY NAME	SPONSOR	DEPARTMENT	TRANSACTION NO.	DATE MO	DAY	YR.	PAGE NO.
							OFF. / ENL.				
01			02	03	04	05	06	07			08

SEQUENCE CODE/ P.O. NUMBER	MILITARY NOBC/ NEC/ MOS	DESIG/ RATE	GRADE	ALLOW-ANCE	BILLET/POSITION TITLE	MIL. OR CIV.	CIVILIAN SERVICE, SERIES GRADE/GROUP	NO. POSI-TIONS	REMARKS
09	10	11	12	13	14	15	16	17	18
			RM2	1	Traffic Supervisor				
			CY3	3	Operator				
			RMSN	1	Message Processor				
					MILITARY SERVICES AND SECURITY DIV.				
					Security Branch				
					Guard Supervisor		GS-9	1	
					Admin Asst. (Security)		GS-7/6/5	2	
					AOICC FOR PROGRAMS & FINANCIAL MGMNT				
			CAPT	1	AOICC for Programs & Financial Mgt		(*GS-15)		
					Secretary-Steno		GS-6	1	
					LEVEL OF EFFORT/CONTRACT CONTROL PROG				
			CDR	1	Director, Level of Effort Program		(*GS-14)		
			LCDR,LT	3	Level of Effort Program Analyst		(*GS-12/13)		
					Secretary-Steno		GS-4	1	
					PROGRAM MANAGEMENT OFFICE				
			CDR	1	Program Management Officer		(*GS-14)		
					Secretary-Steno		GS-4	1	
			LCDR	3	Sponsor Program Manager		(*GS-13)		
					General Engineer		GS-11/12	6	
					Constr Prog Anal/Stat Clerk		GS-5/7/9	3	

TOTALS	NAVY OFF.	NAVY ENL.	TOTAL NAVY	MARINE OFF.	MARINE ENL.	TOTAL MARINE	TOTAL MIL.	GRADED CIV.	UNGRADED CIV.	TOTAL CIV.	TOTAL MANPOWER
ALLOWANCE/ CEILING											
19	20	21	22	23	24	25	26	27	28	29	30

OP-0181 C-14187

OICC ORGANIZATION NO.1 (PROPOSED) $100 + MILLION WIP

MANPOWER LISTING

OPNAV FORM 5320/3 S/N-0107-778-9300 REF: OPNAVINST. 5320.2 (SERIES) REPORT OPNAV 5320-2

MARP CODE SEC.	LINE	S/L	ACTIVITY CODE	ACTIVITY NAME	SPONSOR	DEPARTMENT	TRANSACTION NO.	DATE MO	DAY	YR.	PAGE NO.
							OFF. / ENL.				
01			02	03	04	05	06	07			08

SEQUENCE CODE/ P.D. NUMBER	MILITARY NOBC/ NEC/ MOS	DESIG/ RATE	GRADE	ALLOW-ANCE	BILLET/POSITION TITLE	MIL. OR CIV.	CIVILIAN SERVICE, SERIES GRADE/GROUP	NO. POSI-TIONS	REMARKS
09	10	11	12	13	14	15	16	17	18
					FINANCIAL MGT DIVISION				
			CDR	1	Financial Mgt Officer		(*GS-14)		
					Secy-Steno		GS-5	1	
					CPAF ACCOUNTING REVIEW BRANCH				
			LCDR	1	S CPAF Accountant		(*GS-13)		
					S Cost Accountant		GS-13	2	
					Accountant		GS-12/11	3	
					Accounting Tech.		GS-9/7/5	3	
					Clerk/Typist		GS-3/4	1	
					ACCOUNTING BRANCH				
			LCDR	1	S Accountant		(*GS-13)		
					Accountant		GS-13	2	
					Accountant		GS-12/11	2	
					Accounting Tech.		GS-9/7/5	3	
					Clerk/Typist		GS-3/4	1	
			LCDR	1	BUDGET BRANCH				
					S Budget Officer		(*GS-13)		
					Budget Analyst		GS-13	2	
					Budget Analyst		GS-12/11	2	
					Budget Tech.		GS-9/7/5	3	
					Clerk/Typist		GS-3/4	1	

TOTALS	NAVY OFF.	NAVY ENL.	TOTAL NAVY	MARINE OFF.	MARINE ENL.	TOTAL MARINE	TOTAL MIL.	GRADED CIV.	UNGRADED CIV.	TOTAL CIV.	TOTAL MANPOWER
ALLOWANCE/ CEILING											
19	20	21	22	23	24	25	26	27	28	29	30

OP-01B1 C-14187

MANPOWER LISTING
OPNAV FORM 5320/3 S/N-0107-778-9300

OICC ORGANIZATION NO.1 (PROPOSED) $100 + MILLION WIP

REF: OPNAVINST. 5320.2 (SERIES)

REPORT OPNAV 5320-2

MARP CODE SEQ.	LINE	S/L	ACTIVITY CODE	ACTIVITY NAME	SPONSOR	DEPARTMENT	TRANSACTION NO.	DATE MO	DAY	YR.	PAGE NO.
							OFF. / ENL.				
01			02	03	04	05	06	07			08

SEQUENCE CODE/ P.D. NUMBER	MILITARY NOBC/ NEC/ MOS	DESIG/ RATE	GRADE	ALLOW-ANCE	BILLET/POSITION TITLE	MIL. OR CIV.	CIVILIAN SERVICE, SERIES GRADE/GROUP	NO. POSI-TIONS	REMARKS
09	10	11	12	13	14	15	16	17	18
					ADMINISTRATIVE SERVICES DIVISION				
			LCDR	1	Administrative Sers Ofcr		(*GS-13)		
					Secy-Steno		GS-4	1	
					PUBLIC WORKS BRANCH				
			LT	1	Public Works Ofcr		(*GS-12)		
					Clerk-Typist		GS-3	1	
					Housing Section				
					Housing Project Manager		GS-9	1	
					Billeting Mgr		GS-5	1	
					Hsg Project Clk (typing)		GS-4	1	
					Painter		V.6	2	
					Laborer		V.6	1	
					Motorpool Section				
					Auto Transportation Spec.		GS-9	1	
					Admin. Asst		GS-7	1	
					Clerk/typist		GS-3/2	1	
					Chauffeur		L.4	2	
					Inspector, Auto Mechanic		H.7	1	
					Auto Mechanic		V.6	1	

TOTALS	NAVY OFF.	NAVY ENL.	TOTAL NAVY	MARINE OFF.	MARINE ENL.	TOTAL MARINE	TOTAL MIL.	GRADED CIV.	UNGRADED CIV.	TOTAL CIV.	TOTAL MANPOWER
ALLOWANCE/ CEILING											
19	20	21	22	23	24	25	26	27	28	29	30

OP-01B1

C-14187

OICC ORGANIZATION NO.1 (PROPOSED) $100 + MILLION WIP

MANPOWER LISTING
OPNAV FORM 5320/3 S/N-0107-778-9300 REF: OPNAVINST. 5320.2 (SERIES) REPORT OPNAV 5320-2

MARP CODE SEQ.	LINE	S/L	ACTIVITY CODE	ACTIVITY NAME	SPONSOR	DEPARTMENT	TRANSACTION NO.	DATE MO	DAY	YR.	PAGE NO.
							OFF. / ENL.				
01			02	03	04	05	06	07			08

SEQUENCE CODE/ P.D. NUMBER	MILITARY NOBC/ NEC/ MOS	DESIG/ RATE	GRADE	ALLOW-ANCE	BILLET/POSITION TITLE	MIL. OR CIV.	CIVILIAN SERVICE, SERIES GRADE/GROUP	NO. POSI-TIONS	REMARKS
09	10	11	12	13	14	15	16	17	18
					SERVICES AND SUPPLY BRANCH				
			LT	1	Services and Supply Officer		(*GS-12)		
					Clerk/typist		GS-3/2	1	
					Requisition Section				
					Procurement Asst/Supply Spec		GS-7	2	
					Purchasing Agent		GS-5	2	
					Property Control Section				
					Supply Clerk		GS-5	1	
					Supply Clerk		GS-4	2	
					MAIL, FILE AND REPRODUCTION BRANCH				
			LT	1	Mail, File & Reproduction Ofcr		(*GS-12)		
					Mail Section				
					Mail and File Supr		GS-5	1	
					Teletypist		GS-4	1	
					Mail & File Clk (typ)		GS-4/3	2	
					Central Files Section				
					Central Files Supr		GS-9	1	
					Paperwork Mgt Spec.		GS-9	1	
					Directive & File Spec.		GS-5/4	2	

TOTALS	NAVY OFF.	NAVY ENL.	TOTAL NAVY	MARINE OFF.	MARINE ENL.	TOTAL MARINE	TOTAL MIL.	GRADED CIV.	UNGRADED CIV.	TOTAL CIV.	TOTAL MANPOWER
ALLOWANCE/ CEILING											
19	20	21	22	23	24	25	26	27	28	29	30

OP-01B' C-14167

MANPOWER LISTING

OPNAV FORM 5320/3 S/N-0107-778-9300

OICC ORGANIZATION NO.1 (PROPOSED)$100 + MILLION WIP

REF: OPNAVINST. 5320.2 (SERIES)

REPORT OPNAV 5320-2

MARP CODE SEG.	LINE	S/L	ACTIVITY CODE	ACTIVITY NAME	SPONSOR	DEPARTMENT	TRANSACTION NO.	DATE MO	DAY	YR.	PAGE NO.
							OFF. / ENL.				
01			02	03	04	05	06	07			08

SEQUENCE CODE/ P.D. NUMBER	MILITARY NOBC/ NEC/ MOS	DESIG/ RATE	GRADE	ALLOW-ANCE	BILLET/POSITION TITLE	MIL. OR CIV.	CIVILIAN SERVICE, SERIES GRADE/GROUP	NO. POSI-TIONS	REMARKS
09	10	11	12	13	14	15	16	17	18
					Reproduction Section				
					Printing Plant Supr.		GS-9/7	1	
					Printing Machine Opr.		WB-8/12	2	
					MANAGEMENT INFORMATION & SYSTEMS DIV				
			CDR	1	Data Mgt Ofcr		(*GS-14)		
					Secy-Steno		GS-5	1	
					MANAGEMENT INFORMATION CENTER				
			LT	1	MIC Ofcr		(*GS-12)		
					Info Spec		GS-9/7	2	
					AUTOMATIC DATA PROCESSING BRANCH				
			LCDR	1	ADP Officer		(*GS-13)		
					S. Digital Computer Systems Spec		GS-13	2	
					Computer Spec.		GS-12/11	3	
					Computer Programmer		GS-11/9/7	3	
					Computer Tech.		GS-7/5	1	
					Data Proc Clk/Card Punch Opr		GS-4/3	2	
					Clerk/typist		GS-3/4	1	

TOTALS	NAVY OFF.	NAVY ENL.	TOTAL NAVY	MARINE OFF.	MARINE ENL.	TOTAL MARINE	TOTAL MIL.	GRADED CIV.	UNGRADED CIV.	TOTAL CIV.	TOTAL MANPOWER
ALLOWANCE/ CEILING											
19	20	21	22	23	24	25	26	27	28	29	30

OP-01B1

C-14167

MANPOWER LISTING

OPNAV FORM 5320/3 S/N-0107-778-9300 REF: OPNAVINST. 5320.2 (SERIES) REPORT OPNAV 5320-2

OICC ORGANIZATION NO.1 (PROPOSED) $100 + MILLION WIP

MARP CODE SEG.	LINE	S/L	ACTIVITY CODE	ACTIVITY NAME	SPONSOR	DEPARTMENT	TRANSACTION NO.	DATE MO	DAY	YR.	PAGE NO.
							OFF. / ENL.				
01			02	03	04	05	06	07			08

SEQUENCE CODE/ P.D. NUMBER	MILITARY NOBC/ NEC/ MOS	DESIG/ RATE	GRADE	ALLOW-ANCE	BILLET/POSITION TITLE	MIL. OR CIV.	CIVILIAN SERVICE, SERIES GRADE/GROUP	NO. POSI-TIONS	REMARKS
09	10	11	12	13	14	15	16	17	18
					DIRECTOR OF CONSTRUCTION NORTH				
			CAPT	1	DirCon North				
			CDR	1	Deputy DirCon North				
					Secretary (Stenography)		GS-5	1	
					Clerk Typist		GS-3/4	1	
					ROICC's				
					Number of separate ROICC offices will be largely determined by nature of work and spread of work sites on island or island grouping.				
			LCDR,LT	2	ROICC				
					Construction Representative		GS-9/11	2	
					Construction Inspectors		GS-7/9	6	
					Labor/Material Checker		GS-4	2	
					Clerk Typist		GS-3/4	2	
					DIRECTOR OF CONSTRUCTION SOUTH				
			CAPT	1	DirCon South				
			CDR	1	Deputy DirCon South				
					Secretary (Stenography)		GS-5	1	
					Clerk Typist		GS-3/4	1	
					ROICC's				
					Number of separate ROICC offices will be largely determined by nature				

TOTALS	NAVY OFF.	NAVY ENL.	TOTAL NAVY	MARINE OFF.	MARINE ENL.	TOTAL MARINE	TOTAL MIL.	GRADED CIV.	UNGRADED CIV.	TOTAL CIV.	TOTAL MANPOWER
ALLOWANCE/ CEILING											
19	20	21	22	23	24	25	26	27	28	29	30

OP-01B1 C-14167

MANPOWER LISTING
OPNAV FORM 5320/3 S/N-0107-778-9300

OICC ORGANIZATION NO. 1 (PROPOSED) $100 + MILLION WIP

REF: OPNAVINST. 5320.2 (SERIES)

REPORT OPNAV 5320-2

MARP CODE SEQ.	LINE	S/L	ACTIVITY CODE	ACTIVITY NAME	SPONSOR	DEPARTMENT	TRANSACTION NO.	DATE MO	DAY	YR.	PAGE NO.
							OFF. / ENL.				
01			02	03	04	05	06	07			08

SEQUENCE CODE/ P.O. NUMBER	MILITARY NOBC/ NEC/ MOS	DESIG/ RATE	GRADE	ALLOW-ANCE	BILLET/POSITION TITLE	MIL. OR CIV.	CIVILIAN SERVICE, SERIES GRADE/GROUP	NO. POSI-TIONS	REMARKS
09	10	11	12	13	14	15	16	17	18
					of work and spread of work sites on island or island grouping.				
					ROICC				
			LCDR,LT	3	Construction Representative		GS-9/11	4	
					Construction Inspector		GS-7/9	10	
					Labor/Material Checker		GS-4	2	
					Clerk Typist		GS-3/4	3	
					AOICC FOR OPERATIONS				
			CAPT	1	AOICC for Operations		(*GS-15)		
					Secretary-Steno		GS-6	1	
					CONTRACTOR PERSONNEL RELATIONS OFFICE				
					Labor Relations Spec.		GS-13/12	1	
					Clerk Typist		GS-4	1	
					CONTRACTS DIVISION				
			CDR	1	Contracts Director		(*GS-14)		
					S. Contract Admin.		GS-13	2	
					Contract Price Anal.		GS-12	1	
					Contract Spec.		GS-12/11/9	3	
					Contract Assistant		GS-7/5	2	
					Clerk/Steno		GS-5	1	
					DESIGN DIVISION				Design Division staffing was developed with 25% of design done in-house.
			CDR	1	Design Director		(*GS-14)		

TOTALS	NAVY OFF.	NAVY ENL.	TOTAL NAVY	MARINE OFF.	MARINE ENL.	TOTAL MARINE	TOTAL MIL.	GRADED CIV.	UNGRADED CIV.	TOTAL CIV.	TOTAL MANPOWER
ALLOWANCE/ CEILING											
19	20	21	22	23	24	25	26	27	28	29	30

OP-0181

C-14107

MANPOWER LISTING

OPNAV FORM 5320/3 S/N-0107-778-9300

OICC ORGANIZATION NO.1 (PROPOSED) $100 + MILLION WIP

REF: OPNAVINST. 5320.2 (SERIES)

REPORT OPNAV 5320-2

MARP CODE SEQ.	LINE	S/L	ACTIVITY CODE	ACTIVITY NAME	SPONSOR	DEPARTMENT	TRANSACTION NO.	DATE MO	DAY	YR.	PAGE NO.
							OFF. / ENL.				
01			02	03	04	05	06	07			08

SEQUENCE CODE/ P.D. NUMBER	MILITARY NOBC/ NEC/ MOS	DESIG/ RATE	GRADE	ALLOW-ANCE	BILLET/POSITION TITLE	MIL. OR CIV.	CIVILIAN SERVICE, SERIES GRADE/GROUP	NO. POSI-TIONS	REMARKS
09	10	11	12	13	14	15	16	17	18
					Secretary/Steno		GS-5	1	
					ASSIST. FOR DESIGN MGT.				
					Supervisor General Engineer		GS-13	1	
					General Engineer		GS-12	1	
					Prog. Anal./Sched.		GS-11	1	
					Clerk-Steno		GS-4	1	
					Clerk-Typist		GS-3/4	7	
					File Clerk		GS-3/4	1	
					Plan Files				
					Supervisor File Clerk		GS-5	1	
					File Clerk		GS-3/4	1	
					ASSIST. FOR VALUE ENGINEER				
					General Engineer		GS-13	1	
					ASSISTANT FOR FIRE PROTECTION				
					Sup. Fire Prev. Engineer		GS-13	1	
					Fire Prev. Engineer		GS-12	3	
					ARCH. BRANCH				
					Sup. Arch.		GS-13	1	
					Arch		GS-12	14	
					Arch		GS-11	2	
					Eng. Tech.		GS-9/11	2	

TOTALS	NAVY OFF.	NAVY ENL.	TOTAL NAVY	MARINE OFF.	MARINE ENL.	TOTAL MARINE	TOTAL MIL.	GRADED CIV.	UNGRADED CIV.	TOTAL CIV.	TOTAL MANPOWER
ALLOWANCE/ CEILING											
19	20	21	22	23	24	25	26	27	28	29	30

OP-01B1

C-14167

MANPOWER LISTING

OICC ORGANIZATION NO.1 (PROPOSED) $100 + MILLION WIP

MARP CODE SEG.	LINE	S/L	ACTIVITY CODE	ACTIVITY NAME	SPONSOR	DEPARTMENT	TRANSACTION NO.	DATE MO.	DAY	YR.	PAGE NO.
			— —				OFF. / ENL.				
01			02	03	04	05	06	07			08

SEQUENCE CODE/ P.D. NUMBER	MILITARY NOBC/ NEC/ MOS	DESIG/ RATE	GRADE	ALLOW-ANCE	BILLET/POSITION TITLE	MIL. OR CIV.	CIVILIAN SERVICE, SERIES GRADE/GROUP	NO. POSITIONS	REMARKS
09	10	11	12	13	14	15	16	17	18
					STRUCT. BRANCH				
					Sup. Struct. Engineer		GS-13	1	
					Struct. Engineer		GS-12	12	
					Struct. Engineer		GS-11	2	
					Struct. Eng. Tech.		GS-9/11	2	
					MECH. BRANCH				
					Sup. Mech. Eng.		GS-13	1	
					Mech. Eng.		GS-12	8	
					Mech. Eng.		GS-11	2	
					Mech. Eng. Tech.		GS-9-11	2	
					ELECT. BRANCH				
					Sup. Elect. Eng.		GS-13	1	
					Elect. Eng.		GS-12	5	
					Elect. Eng.		GS-11	2	
					Elect. Eng. Tech.		GS-9/11	2	
					CIVIL BRANCH				
					Sup. Civil Eng.		GS-13	1	
					Civil Eng.		GS-12	6	
					Civil Eng.		GS-11	2	
					Civil Eng. Tech.		GS-9/11	2	
					SPECS. BRANCH				
					Sup. Gen. Eng.		GS-13	1	
					Gen. Eng.		GS-12	3	

TOTALS	NAVY OFF.	NAVY ENL.	TOTAL NAVY	MARINE OFF.	MARINE ENL.	TOTAL MARINE	TOTAL MIL.	GRADED CIV.	UNGRADED CIV.	TOTAL CIV.	TOTAL MANPOWER
ALLOWANCE/ CEILING											
19	20	21	22	23	24	25	26	27	28	29	30

MANPOWER LISTING
OPNAV FORM 5320/3 S/N-0107-778-9300

OICC ORGANIZATION NO.1 (PROPOSED) $100 + MILLION WIP

REF: OPNAVINST. 5320.2 (SERIES)

REPORT OPNAV 5320-2

MARP CODE SEQ.	LINE	S/L	ACTIVITY CODE	ACTIVITY NAME	SPONSOR	DEPARTMENT	TRANSACTION NO.	DATE MO.	DAY	YR.	PAGE NO.
							OFF. / ENL.				
01			02	03	04	05	06	07			08

SEQUENCE CODE/ P.D. NUMBER	MILITARY NOBC/ NEC/ MOS	DESIG/ RATE	GRADE	ALLOW-ANCE	BILLET/POSITION TITLE	MIL. OR CIV.	CIVILIAN SERVICE, SERIES GRADE/GROUP	NO. POSI-TIONS	REMARKS
09	10	11	12	13	14	15	16	17	18
					Civil Eng.		GS-12	2	
					Elect. Eng.		GS-12	2	
					Mech. Eng.		GS-12	2	
					Clerk Typist		GS-3	1	
					COST ENG. BRANCH				
					Supv. Gen. Eng.		GS-13	1	
					Gen Eng.		GS-12	1	
					Mech. Eng.		GS-12	1	
					Elect. Eng.		GS-12	1	
					Civil Eng.		GS-12	1	
					Arch. Eng.		GS-12	1	
					CONSTRUCTION DIVISION				
			CDR	1	Construction Ofcr		(*GS-14)		
					Secy-Steno		GS-5	1	
					INSPECTION BRANCH				
			LCDR	1	S. Gen. Eng.		(*GS-13)		
					Construction Mgt Eng.		GS-12/11	3	
					Construction Representative		GS-11/9	2	
					Clerk typist		GS-4/3	1	

TOTALS	NAVY OFF.	NAVY ENL.	TOTAL NAVY	MARINE OFF.	MARINE ENL.	TOTAL MARINE	TOTAL MIL.	GRADED CIV.	UNGRADED CIV.	TOTAL CIV.	TOTAL MANPOWER
ALLOWANCE/ CEILING											
19	20	21	22	23	24	25	26	27	28	29	30

OP-01B1

C-14167

MANPOWER LISTING

OPNAV FORM 5320/3 S/N-0107-778-9300 REF: OPNAVINST. 5320.2 (SERIES) REPORT OPNAV 5320-2

OICC ORGANIZATION NO.1 (PROPOSED) $100 + MILLION WIP

MARP CODE SEC.	LINE	S/L	ACTIVITY CODE	ACTIVITY NAME	SPONSOR	DEPARTMENT	TRANSACTION NO.	DATE MO.	DAY	YR.	PAGE NO.
							OFF. / ENL.				
01			02	03	04	05	06	07			08

SEQUENCE CODE/ P.D. NUMBER	MILITARY NOBC/ NEC/ MOS	DESIG/ RATE	GRADE	ALLOW-ANCE	BILLET/POSITION TITLE	MIL. OR CIV.	CIVILIAN SERVICE, SERIES GRADE/GROUP	NO. POSI-TIONS	REMARKS
09	10	11	12	13	14	15	16	17	18
					Labor & Material Checker		GS-5/4/3	2	
					Clerk typist		GS-3/4	1	
					TRANSPORTATION BRANCH				
			LCDR	1	Trans. Ofcer		(*GS-13)		
					Traffic Mgt. Spec.		GS-12	1	
					Traffic Mgt. Spec.		GS-11/9	1	
					Clerk Typist		GS-3/4	1	
					EQUIPMENT BRANCH				
			LCDR	1	Equip. Ofcr		(*GS-13)		
					Equip. Spec.		GS-12	1	
					Equip. Spec.		GS-11/9	1	
					Stat. Clerk		GS-5	1	
					Clerk Typist		GS-3/4	1	
			Totals	52	Military			294	Civilians

TOTALS	NAVY OFF.	NAVY ENL.	TOTAL NAVY	MARINE OFF.	MARINE ENL.	TOTAL MARINE	TOTAL MIL.	GRADED CIV.	UNGRADED CIV.	TOTAL CIV.	TOTAL MANPOWER
ALLOWANCE/ CEILING											
19	20	21	22	23	24	25	26	27	28	29	30

OP-0181 C-14187

OICC ORGANIZATION NO.2 (PROPOSED) $25 - 100 MILLION WIP

MANPOWER LISTING
OPNAV FORM 5320/3 S/N-0107-778-9300 REF: OPNAVINST. 5320.2 (SERIES) REPORT OPNAV 5320-2

MARP CODE SEQ.	LINE	S/L	ACTIVITY CODE	ACTIVITY NAME	SPONSOR	DEPARTMENT	TRANSACTION NO.	DATE MO	DAY	YR.	PAGE NO.
							OFF. / ENL.				
01			02	03	04	05	06	07			08

SEQUENCE CODE/ P.D. NUMBER	MILITARY NOBC/ NEC/ MOS	DESIG/ RATE	GRADE	ALLOW-ANCE	BILLET/POSITION TITLE	MIL. OR CIV.	CIVILIAN SERVICE, SERIES GRADE/GROUP	NO. POSI-TIONS	REMARKS
09	10	11	12	13	14	15	16	17	18
					NOTE: Military Personnel are shown for most Administrative Billets, under mobilization conditions a civilian position might be substituted and this alternative is shown in parentheses with an asterisk.				
					OFFICER IN CHARGE OF CONSTRUCTION				
			CAPT	1	OICC				
			LCDR	1	Exec. Asst/Aid to the Cdr				
					Secretary (Stenography)		GS-6	1	
			CAPT	1	Deputy OICC				
					Secretary (Stenography)		GS-5	1	
					COUNSEL				
					Attorney Advisor		GS-13	1	
					Initially TAD from an OICC or EFD to ensure personnel familiar with the area.				
					Clerk (Stenography)		GS-4	1	

TOTALS	NAVY OFF.	NAVY ENL.	TOTAL NAVY	MARINE OFF.	MARINE ENL.	TOTAL MARINE	TOTAL MIL.	GRADED CIV.	UNGRADED CIV.	TOTAL CIV.	TOTAL MANPOWER
ALLOWANCE/ CEILING											
19	20	21	22	23	24	25	26	27	28	29	30

OP-0181 C-14167

MANPOWER LISTING

OPNAV FORM 5320/3 S/N-0107-778-9300 REF: OPNAVINST. 5320.2 (SERIES) REPORT OPNAV 5320-2

OICC ORGANIZATION NO.2 (PROPOSED) $25 - 100 MILLION WIP

MARP CODE SEC	LINE	S/L	ACTIVITY CODE	ACTIVITY NAME	SPONSOR	DEPARTMENT	TRANSACTION NO.	DATE MO	DAY	YR.	PAGE NO.
							OFF. / ENL.				
01			02	03	04	05	06	07			08

SEQUENCE CODE/ P.O. NUMBER	MILITARY NOBC/ NEC/ MOS	DESIG/ RATE	GRADE	ALLOW-ANCE	BILLET/POSITION TITLE	MIL. OR CIV.	CIVILIAN SERVICE, SERIES GRADE/GROUP	NO. POSI-TIONS	REMARKS
09	10	11	12	13	14	15	16	17	18
					REAL ESTATE				
					Initially TAD from an OICC or EFD. Await early developments to determine if real estate activity will be of sufficient long term magnitude to merit permanent staff.				
					PUBLIC AFFAIRS OFFICE				
			LT	1	Public Information Officer		(*GS-13)		
					Writer/Historian		GS-11/12	1	
					Interpreter		GS-5/6/7	1	
					NOTE: Personnel service will be provided by the Overseas and Returning Placement Staff (ORPS) or the nearest Naval activity, as appropriate.				
					CIVILIAN PERSONNEL OFFICE				
					Personnel Officer		GS-13	1	
					Personnel Clerk (Typ)		GS-5/4	1	
					MILITARY SERVICES AND SECURITY DIVISION				
			LT	1	Military Services & Security Officer				
					SECURITY BRANCH				
					Guard Supervisor		GS-9	1	
					Administrative Assistant (Security)		GS-7	1	
					COMMUNICATIONS & CLASS FILES BRANCH				
					Travel Clerk		GS-5/4	1	
			ENS	1	Communications & Class Files Officer				

TOTALS	NAVY OFF.	NAVY ENL.	TOTAL NAVY	MARINE OFF.	MARINE ENL.	TOTAL MARINE	TOTAL MIL.	GRADED CIV.	UNGRADED CIV.	TOTAL CIV.	TOTAL MANPOWER
ALLOWANCE/ CEILING											
19	20	21	22	23	24	25	26	27	28	29	30

OP-01B1 C-14187

OICC ORGANIZATION NO.2 (PROPOSED) $25 - 100 MILLION WIP

MANPOWER LISTING
OPNAV FORM 5320/3 S/N-0107-778-9300 REF: OPNAVINST. 5320.2 (SERIES) REPORT OPNAV 5320-2

MARP CODE SEQ.	LINE	S/L	ACTIVITY CODE	ACTIVITY NAME	SPONSOR	DEPARTMENT	TRANSACTION NO.	DATE MO	DAY	YR.	PAGE NO.
							OFF. / ENL.				
01			02	03	04	05	06	07			08

SEQUENCE CODE/ P.D. NUMBER	MILITARY NOBC/ NEC/ MOS	DESIG/ RATE	GRADE	ALLOW-ANCE	BILLET/POSITION TITLE	MIL. OR CIV.	CIVILIAN SERVICE, SERIES GRADE/GROUP	NO. POSI-TIONS	REMARKS
09	10	11	12	13	14	15	16	17	18
			RM1	1	Communications Supervisor				
			CY3	3	Operator				
					AOICC FOR PROGRAMS & FINANCIAL MGT				
			CAPT	1	AOICC for Prog. & Fin, Mgt		(*GS-15)		
					Secy-Steno		GS-5	1	
					LEVEL OF EFFORT/CONTRACT CONTROL PROG.				
			LCDR	1	Director, Level of Effort Program		(*GS-13)		
			LCDR,LT	2	Level of Effort Program Analyst		(*GS-12)		
					Secy-Steno		GS-4	1	
					PROGRAM MANAGEMENT OFFICE				
			CDR	1	Prog. Management Officer		(*GS-14)		
					Secy-Steno		GS-4	1	
			LCDR	3	Sponsor Program Manager		(*GS-13)		
					General Engineer		GS-11/12	4	
					Constr. Prog. Anal/Stat. Clerk		GS-5/7/9	2	
					FINANCIAL MANAGEMENT DIVISION				
			CDR	1	Financial Management Officer		(*GS-14)		
					Secy-Steno		GS-4	1	
					Clerk-Typist		GS-3	1	

TOTALS	NAVY OFF.	NAVY ENL.	TOTAL NAVY	MARINE OFF.	MARINE ENL.	TOTAL MARINE	TOTAL MIL.	GRADED CIV.	UNGRADED CIV.	TOTAL CIV.	TOTAL MANPOWER
ALLOWANCE/ CEILING											
19	20	21	22	23	24	25	26	27	28	29	30

OP-01B1 C-14167

OICC ORGANIZATION NO.2 (PROPOSED) $25 - 100 MILLION WIP

MANPOWER LISTING

OPNAV FORM 5320/3 S/N-0107-778-9300 REF: OPNAVINST. 5320.2 (SERIES) REPORT OPNAV 5320-2

MARP CODE SEQ.	LINE	S/L	ACTIVITY CODE	ACTIVITY NAME	SPONSOR	DEPARTMENT	TRANSACTION NO.	DATE MO	DAY	YR.	PAGE NO.
							OFF. / ENL.				
01			02	03	04	05	06	07			08

SEQUENCE CODE/ P.D. NUMBER	MILITARY NOBC/ NEC/ MOS	DESIG/ RATE	GRADE	ALLOW-ANCE	BILLET/POSITION TITLE	MIL. OR CIV.	CIVILIAN SERVICE, SERIES GRADE/GROUP	NO. POSI-TIONS	REMARKS
09	10	11	12	13	14	15	16	17	18
					CPAF ACCTG. REVIEW BRANCH				
			LT	1	S. CPAF Accountant		(*GS-12)		
					Accountant		GS-12/11	2	
					Accounting Tech.		GS-9/7/5	2	
					ACCOUNTING BRANCH				
			LT	1	S. Accountant		(*GS-12)		
					Accountant		GS-12/11	2	
					Accounting Tech.		GS-9/7	2	
					BUDGET BRANCH				
			LCDR	1	S. Budget Ofcr		(*GS-13)		
					Budget Analyst		GS-12/11	2	
					Budget Tech.		GS-9/7	2	
					ADMINISTRATIVE SERVICES DIVISION				
			LCDR	1	Admin. Svcs. Ofcr		(*GS-13)		
					Secy-Steno		GS-4	1	
					PUBLIC WORKS BRANCH				
			LT	1	Public Works Ofcr		(*GS-12)		

TOTALS	NAVY OFF.	NAVY ENL.	TOTAL NAVY	MARINE OFF.	MARINE ENL.	TOTAL MARINE	TOTAL MIL.	GRADED CIV.	UNGRADED CIV.	TOTAL CIV.	TOTAL MANPOWER
ALLOWANCE/ CEILING											
19	20	21	22	23	24	25	26	27	28	29	30

OP-01B1 C-14167

OICC ORGANIZATION NO.2 (PROPOSED) $25 - 100 MILLION WIP

MANPOWER LISTING
OPNAV FORM 5320/3 S/N-0107-778-9300 REF: OPNAVINST. 5320.2 (SERIES) REPORT OPNAV 5320-2

MARP CODE SEQ.	LINE	S/L	ACTIVITY CODE	ACTIVITY NAME	SPONSOR	DEPARTMENT	TRANSACTION NO.	DATE MO	DAY	YR.	PAGE NO.
							OFF. / ENL.				
01			02	03	04	05	06	07			08

SEQUENCE CODE/ P.D. NUMBER	MILITARY NOBC/ NEC/ MOS	DESIG/ RATE	GRADE	ALLOW-ANCE	BILLET/POSITION TITLE	MIL. OR CIV.	CIVILIAN SERVICE, SERIES GRADE/GROUP	NO. POSI-TIONS	REMARKS
09	10	11	12	13	14	15	16	17	18
					PUBLIC WORKS BRANCH - CONT'D				
					Clerk-Typ.		GS-3/2	1	
					Housing Billeting and Project Mgr.		GS-7	1	
					Painter & Lead Foreman		L.6	1	
					Painter		V.6	1	
					Laborer		V.2	1	
					Auto Transportation Spec.		GS-9	1	
					Chauffeur		L.4	2	
					Inspector, Auto Mechanic		H.7	1	
					Auto Mechanic		V.6	1	
					SERVICES & SUPPLY BRANCH				
			LT(JG)	1	Services & Supply Ofcr		(*GS-11)		
					Clerk-typist		GS-3/2	1	
					Procurement Asst/supply spec.		GS-7	1	
					Supply Clerk		GS-5	1	
					MAIL, FILE & REPRODUCTION BRANCH				
			LT(JG)	1	Mail, File & Repro. Ofcr		(*GS-11)		
					Mail & file supr.		GS-5	1	
					Teletypist		GS-4	1	
					Mail & file Clk (typ)		GS-4/3	1	
					Central file supr.		GS-7	1	
					Paperwork Mgt. Spec.		GS-9	1	

TOTALS	NAVY OFF.	NAVY ENL.	TOTAL NAVY	MARINE OFF.	MARINE ENL.	TOTAL MARINE	TOTAL MIL.	GRADED CIV.	UNGRADED CIV.	TOTAL CIV.	TOTAL MANPOWER
ALLOWANCE/ CEILING											
19	20	21	22	23	24	25	26	27	28	29	30

OP-01B1 C-14187

OICC ORGANIZATION NO. 2 (PROPOSED) $25 - 100 MILLION WIP

MANPOWER LISTING

OPNAV FORM 5320/3 S/N-0107-778-9300 REF: OPNAVINST. 5320.2 (SERIES) REPORT OPNAV 5320-2

MARP CODE SEQ.	LINE	S/L	ACTIVITY CODE	ACTIVITY NAME	SPONSOR	DEPARTMENT	TRANSACTION NO.	DATE MO	DAY	YR.	PAGE NO.
							OFF. / ENL.				
01			02	03	04	05	06	07			08

SEQUENCE CODE/ P.D. NUMBER	MILITARY NOBC/ NEC/ MOS	DESIG/ RATE	GRADE	ALLOW-ANCE	BILLET/POSITION TITLE	MIL. OR CIV.	CIVILIAN SERVICE, SERIES GRADE/GROUP	NO. POSI-TIONS	REMARKS
09	10	11	12	13	14	15	16	17	18
					MAIL, FILE & REPRO. BRANCH - CONT'D				
					Directive & File Spec.		GS-5/4	1	
					Xerox Operator		WB-8/7	2	
					MANAGEMENT INFORMATION & SYSTEMS DIV.				
			LCDR	1	Data Management Officer		(*GS-13)		
					Secretary-Steno		GS-4	1	
					MANAGEMENT INFORMATION CENTER				
			LT	1	MIC Officer		(*GS-12)		
					Information Specialist		GS-9/7	1	
					AUTOMATIC DATA PROCESSING BRANCH				
			LCDR	1	ADP Officer		(*GS-13)		
					Digital Computer Systems Spec.		GS-13/12/11	2	
					Computer Programmer		GS-11/9/7	2	
					Data Proc. Clk/Card Punch Operator		GS-5/4	2	
					Clerk-Typist		GS-3	1	
					DIRECTOR OF CONSTRUCTION NORTH				
			CDR	1	DirCon North				
			LCDR	1	Deputy DirCon North				
					Secretary (Stenography)		GS-5	1	
					Clerk Typist		GS-3/4	1	

TOTALS	NAVY OFF.	NAVY ENL.	TOTAL NAVY	MARINE OFF.	MARINE ENL.	TOTAL MARINE	TOTAL MIL.	GRADED CIV.	UNGRADED CIV.	TOTAL CIV.	TOTAL MANPOWER
ALLOWANCE/ CEILING											
19	20	21	22	23	24	25	26	27	28	29	30

OP-01B1 C-14167

OICC ORGANIZATION NO.2 (PROPOSED) $25 - 100 MILLION WIP

MANPOWER LISTING
OPNAV FORM 5320/3 S/N-0107-778-9300 REF: OPNAVINST. 5320.2 (SERIES) REPORT OPNAV 5320-2

MARP CODE SEG.	LINE	S/L	ACTIVITY CODE	ACTIVITY NAME	SPONSOR	DEPARTMENT	TRANSACTION NO.	DATE MO.	DAY	YR.	PAGE NO.
							OFF. / ENL.				
01			02	03	04	05	06	07			08

SEQUENCE CODE/ P.D. NUMBER	MILITARY NOBC/ NEC/ MOS	DESIG/ RATE	GRADE	ALLOW-ANCE	BILLET/POSITION TITLE	MIL. OR CIV.	CIVILIAN SERVICE, SERIES GRADE/GROUP	NO. POSI-TIONS	REMARKS
09	10	11	12	13	14	15	16	17	18
					ROICC's				
					Number of separate ROICC offices will be largely determined by nature of work and spread of work sites on island or island grouping.				
			LT/LTjg	2	ROICC				
					Construction Representative		GS-9/11	2	
					Construction Inspectors		GS-7/9	4	
					Labor/Material Checker		GS-4	2	
					Clerk Typist		GS-3/4	2	
					DIRECTOR OF CONSTRUCTION SOUTH				
			CDR	1	DirCon South				
			LCDR	1	Deputy DirCon South				
					Secretary (Stenography)		GS-5	1	
					Clerk Typist		GS-3/4	1	
					ROICC's				
					Number of separate ROICC offices will be largely determined by nature of work and spread of work sites on island or island grouping.				

TOTALS	NAVY OFF.	NAVY ENL.	TOTAL NAVY	MARINE OFF.	MARINE ENL.	TOTAL MARINE	TOTAL MIL.	GRADED CIV.	UNGRADED CIV.	TOTAL CIV.	TOTAL MANPOWER
ALLOWANCE/ CEILING											
19	20	21	22	23	24	25	26	27	28	29	30

OP-0181 C-14187

OICC ORGANIZATION NO.2 (PROPOSED) $25 - 100 MILLION WIP

MANPOWER LISTING

OPNAV FORM 5320/3 S/N-0107-778-9300 REF: OPNAVINST. 5320.2 (SERIES) REPORT OPNAV 5320-2

MARP CODE SEQ.	LINE	S/L	ACTIVITY CODE	ACTIVITY NAME	SPONSOR	DEPARTMENT	TRANSACTION NO.	DATE MO	DAY	YR.	PAGE NO.
							OFF. / ENL.				
01			02	03	04	05	06	07			08

SEQUENCE CODE/ P.D. NUMBER	MILITARY NOBC/ NEC/ MOS	DESIG/ RATE	GRADE	ALLOW-ANCE	BILLET/POSITION TITLE	MIL OR CIV.	CIVILIAN SERVICE, SERIES GRADE/GROUP	NO. POSI-TIONS	REMARKS
09	10	11	12	13	14	15	16	17	18
			LT/LTjg	3	ROICC				
					Construction Representative		GS-9/11	3	
					Construction Inspector		GS-7/9	6	
					Labor/Material Checker		GS-4	2	
					Clerk Typist		GS-3/4	2	
					AOICC FOR OPERATIONS				
			CAPT	1	AOICC for Operations		(*GS-15)		
					Secretary-Steno		GS-5	1	
					CONTRACTOR PERSONNEL RELATIONS OFFICE				
					Labor Relations Spec.		GS-13	1	
					Clerk Typist		GS-4	1	
					CONTRACTS DIVISION				
			CDR	1	Contracts Director		(*GS-14)		
					Contract Spec.		GS-13/12/11	3	
					Contract Asst.		GS-9/7	2	
					Clerk-Steno		GS-4	1	

TOTALS	NAVY OFF.	NAVY ENL.	TOTAL NAVY	MARINE OFF.	MARINE ENL.	TOTAL MARINE	TOTAL MIL.	GRADED CIV.	UNGRADED CIV.	TOTAL CIV.	TOTAL MANPOWER
ALLOWANCE/ CEILING											
19	20	21	22	23	24	25	26	27	28	29	30

OP-01B1 C-14167

MANPOWER LISTING

OPNAV FORM 5320/3 S/N-0107-778-9300

OICC ORGANIZATION NO.2 (PROPOSED) $25 - 100 MILLION WIP

REF: OPNAVINST. 5320.2 (SERIES)

REPORT OPNAV 5320-2

MARP CODE SEG.	LINE	S/L	ACTIVITY CODE	ACTIVITY NAME	SPONSOR	DEPARTMENT	TRANSACTION NO.	DATE MO.	DAY	YR.	PAGE NO.
							OFF. / ENL.				
01			02	03	04	05	06	07			08

SEQUENCE CODE/ P.D. NUMBER	MILITARY NOBC/ NEC/ MOS	DESIG/ RATE	GRADE	ALLOW-ANCE	BILLET/POSITION TITLE	MIL. OR CIV.	CIVILIAN SERVICE, SERIES GRADE/GROUP	NO. POSI-TIONS	REMARKS
09	10	11	12	13	14	15	16	17	18
					DESIGN DIVISION				Design Division staffing was developed with 25% of design done in-house.
			CDR	1	Supv. Gen. Eng.		(*GS-14)		
					Secretary (Steno)		GS-5	1	
					ASSIST. FOR DESIGN MGT				
					Supv. Gen. Eng.		GS-13	1	
					Gen. Eng.		GS-12	1	
					Prog. Anal.		GS-11	1	
					Clerk-Steno		GS-4	1	
					Clerk-Typist		GS-3	3	
					File Clerk Plan Files		GS-3	1	
					Supv. File Clerk		GS-5	1	
					File Clerk		GS-4/3	1	
					ASSIST FOR VALUE ENG.				
					Gen. Eng.		GS-13	1	
					ASSIST FOR FIRE PROTECTION				
					Supv. Fire Prev. Eng		GS-13	1	
					Fire Prev. Eng.		GS-12	2	

TOTALS	NAVY OFF.	NAVY ENL.	TOTAL NAVY	MARINE OFF.	MARINE ENL.	TOTAL MARINE	TOTAL MIL.	GRADED CIV.	UNGRADED CIV.	TOTAL CIV.	TOTAL MANPOWER
ALLOWANCE/ CEILING											
19	20	21	22	23	24	25	26	27	28	29	30

OP-01B1

C-14167

MANPOWER LISTING

OPNAV FORM 5320/3 S/N-0107-778-9300

OICC ORGANIZATION NO.2 (PROPOSED) $25 - 100 MILLION WIP

REF: OPNAVINST. 5320.2 (SERIES)

REPORT OPNAV 5320-2

MARP CODE SEG.	LINE	S/L	ACTIVITY CODE	ACTIVITY NAME	SPONSOR	DEPARTMENT	TRANSACTION NO.	DATE MO	DAY	YR.	PAGE NO.
							OFF. / ENL.				
01			02	03	04	05	06	07			08

SEQUENCE CODE/ P.D. NUMBER	MILITARY NOBC/ NEC/ MOS	DESIG/ RATE	GRADE	ALLOW-ANCE	BILLET/POSITION TITLE	MIL. OR CIV.	CIVILIAN SERVICE, SERIES GRADE/GROUP	NO. POSI-TIONS	REMARKS
09	10	11	12	13	14	15	16	17	18
					ARCHITECTURAL BRANCH				
					Supv. Arch.		GS-13	1	
					Arch.		GS-12	7	
					Arch.		GS-11	2	
					Eng. Tech.		GS-9/11	2	
					STRUCTURAL ENG. BRANCH				
					Supv. Struct. Eng.		GS-13	1	
					Struct. Eng.		GS-12	5	
					Struct. Eng.		GS-11	2	
					Struct. Eng. Tech.		GS-9/11	2	
					MECHANICAL ENG. BRANCH				
					Supv. Mech. Eng.		GS-13	1	
					Mech. Eng.		GS-12	4	
					Mech. Eng.		GS-11	2	
					Mech. Eng. Tech.		GS-9/11	1	
					ELECTRICAL ENG. BRANCH				
					Supv. Elect. Eng.		GS-13	1	
					Elect. Engr.		GS-12	3	
					Elect. Engr.		GS-11	2	

TOTALS	NAVY OFF.	NAVY ENL.	TOTAL NAVY	MARINE OFF.	MARINE ENL.	TOTAL MARINE	TOTAL MIL.	GRADED CIV.	UNGRADED CIV.	TOTAL CIV.	TOTAL MANPOWER
ALLOWANCE/ CEILING											
19	20	21	22	23	24	25	26	27	28	29	30

OP-01B1

C-14167

OICC ORGANIZATION NO.2 (PROPOSED) $25 - 100 MILLION WIP

MANPOWER LISTING

OPNAV FORM 5320/3 S/N-0107-778-9300 REF: OPNAVINST. 5320.2 (SERIES) REPORT OPNAV 5320-2

MARP CODE SEG.	LINE	S/L	ACTIVITY CODE	ACTIVITY NAME	SPONSOR	DEPARTMENT	TRANSACTION NO.	DATE MO.	DAY	YR.	PAGE NO.
							OFF. / ENL.				
01			02	03	04	05	06	07			08

SEQUENCE CODE/ P.D. NUMBER	MILITARY NOBC/ NEC/ MOS	DESIG/ RATE	GRADE	ALLOW-ANCE	BILLET/POSITION TITLE	MIL OR CIV.	CIVILIAN SERVICE, SERIES GRADE/GROUP	NO. POSI-TIONS	REMARKS
09	10	11	12	13	14	15	16	17	18
					CIVIL ENG. BRANCH				
					Supv. Civil Eng.		GS-13	1	
					Civil Eng.		GS-12	3	
					Civil Eng.		GS-11	2	
					Elect. Eng. Tech.		GS-9/11	1	
					SPECIFICIATIONS BRANCH				
					Supv. Gen. Eng.		GS-13	1	
					Gen. Eng.		GS-12	2	
					Civil Eng.		GS-12	1	
					Elec. Eng.		GS-12	1	
					Mech. Eng.		GS-12	1	
					Clerk Typist		GS-4	1	
					COST ENG. BRANCH				
					Supv. Gen. Eng.		GS-13	1	
					Gen. Eng.		GS-12	1	
					Mech. Eng.		GS-12	1	
					Elect. Eng.		GS-12	1	

TOTALS	NAVY OFF.	NAVY ENL.	TOTAL NAVY	MARINE OFF.	MARINE ENL.	TOTAL MARINE	TOTAL MIL.	GRADED CIV.	UNGRADED CIV.	TOTAL CIV.	TOTAL MANPOWER
ALLOWANCE/ CEILING											
19	20	21	22	23	24	25	26	27	28	29	30

OP-0181 C-16187

OICC ORGANIZATION NO.2 (PROPOSED) $25 - 100 MILLION WIP

MANPOWER LISTING

OPNAV FORM 5320/3 S/N-0107-778-9300 REF: OPNAVINST. 5320.2 (SERIES) REPORT OPNAV 5320-2

MARP CODE SE	LINE	S/L	ACTIVITY CODE	ACTIVITY NAME	SPONSOR	DEPARTMENT	TRANSACTION NO.	DATE MO	DAY	YR.	PAGE NO.
							OFF. / ENL.				
01			02	03	04	05	06	07			08

SEQUENCE CODE/ P.D. NUMBER	MILITARY NOBC/ NEC/ MOS	DESIG/ RATE	GRADE	ALLOW-ANCE	BILLET/POSITION TITLE	MIL OR CIV.	CIVILIAN SERVICE, SERIES GRADE/GROUP	NO. POSI-TIONS	REMARKS
09	10	11	12	13	14	15	16	17	18
					CONSTRUCTION DIVISION				
			CDR	1	Construction Ofcr		(*GS-14)		
					Secy-Steno		GS-4	1	
					Clerk-Typist		GS-4/3	1	
					INSPECTION BRANCH				
			LCDR	1	S. Gen. Eng.		(*GS-13)		
					Construction Mgt Eng.		GS-12/11	2	
					Constr. Representative		GS-11/9	2	
					CONSTRUCTION MGT. BRANCH				
			LCDR	1	Construction Mgr. Ofcr		(*GS-13)		
					Const. Mgt Eng.		GS-12/11/9	3	
					MATERIALS TESTING BRANCH				
			LCDR	1	Materials Testing Ofcr		(*GS-13)		
					Civ. Eng.		GS-12/11/9	2	
					Eng. Tech		GS-9/7	1	

TOTALS	NAVY OFF.	NAVY ENL.	TOTAL NAVY	MARINE OFF.	MARINE ENL.	TOTAL MARINE	TOTAL MIL.	GRADED CIV.	UNGRADED CIV.	TOTAL CIV.	TOTAL MANPOWER
ALLOWANCE/ CEILING											
19	20	21	22	23	24	25	26	27	28	29	30

OP-01B1 C-14167

MANPOWER LISTING

OPNAV FORM 5320/3 S/N-0107-778-9300

OICC ORGANIZATION NO.2 (PROPOSED) $25 - 100 MILLION WIP

REF: OPNAVINST. 5320.2 (SERIES)

REPORT OPNAV 5320-2

MARP CODE SEQ.	LINE	S/L	ACTIVITY CODE	ACTIVITY NAME	SPONSOR	DEPARTMENT	TRANSACTION NO.	DATE MO.	DAY	YR.	PAGE NO.
							OFF. / ENL.				
01			02	03	04	05	06	07			08

SEQUENCE CODE/ P.D. NUMBER	MILITARY NOBC/ NEC/ MOS	DESIG/ RATE	GRADE	ALLOW-ANCE	BILLET/POSITION TITLE	MIL. OR CIV.	CIVILIAN SERVICE, SERIES GRADE/GROUP	NO. POSI-TIONS	REMARKS
09	10	11	12	13	14	15	16	17	18
					RESOURCES DIVISION				
			CDR	1	Resources Ofcr		(*GS-14)		
					Secy-Steno		GS-4	1	
					Clerk-typist		GS-4/3	1	
					MATERIAL BRANCH				
			LCDR	1	Material Ofcr		(*GS-13)		
					Supply Mgt or Storage Spec.		GS-12/11	1	
					Inventory Mgt Spec		GS-12/11	1	
					Labor & Material Checker		GS-5/4/3	2	
					TRANSPORTATION BRANCH				
			LT	1	Trans Ofcr		(*GS-12)		
					Traffic Mgt Spec.		GS-12	1	
					Traffic Mgt Spec.		GS-11/9	1	
					EQUIPMENT BRANCH				
			LCDR	1	Equipment Ofcr		(*GS-13)		
					Equip. Spec.		GS-12	1	
					Equip. Specs.		GS-11/9	1	
					Stat. Clerk		GS-5	1	
			Totals	47	Military			193	Civilians

TOTALS	NAVY OFF.	NAVY ENL.	TOTAL NAVY	MARINE OFF.	MARINE ENL.	TOTAL MARINE	TOTAL MIL.	GRADED CIV.	UNGRADED CIV.	TOTAL CIV.	TOTAL MANPOWER
ALLOWANCE/ CEILING											
19	20	21	22	23	24	25	26	27	28	29	30

OP-0181 C-14187

Manpower Listing OICC ORGANIZATION NO.3 (PROPOSED) $25 MILLION OR LESS WIP

MARP CODE SEG.	LINE	S/L	ACTIVITY CODE	ACTIVITY NAME	SPONSOR	DEPARTMENT	TRANSACTION NO.	DATE MO.	DAY	YR.	PAGE NO.
			– –				OFF. / ENL.				
01			02	03	04	05	06	07			08

SEQUENCE CODE / P.D. NUMBER	MILITARY NO.BC/ NEC/ MOS	DESIG/ RATE	GRADE	ALLOW-ANCE	BILLET/POSITION TITLE	MIL. OR CIV.	CIVILIAN SERVICE, SERIES GRADE/GROUP	NO.POSITIONS	REMARKS
09	10	11	12	13	14	15	16	17	18
					NOTE: Military Personnel are shown for most Administrative Billets. Under mobilization conditions a civilian position might be substituted and this alternative is shown in parentheses with an asterisk.				
					OFFICER IN CHARGE OF CONSTRUCTION				
			CAPT	1	OICC				
					Secy-Steno		GS-5	1	
			CDR	1	Deputy OICC				
					Secy-Steno		GS-4	1	
					COUNSEL				
					Attorney Advisor Initially TAD from an OICC or EFD to ensure personnel familiar with the area.		GS-13	1	
					Clerk (Stenography)		GS-4	1	
					REAL ESTATE Initially TAD from an OICC or EFD. Await early developments to determine if real estate activity will be sufficient long term magnitude to merit permanent staff.				

TOTALS	NAVY OFF.	NAVY ENL.	TOTAL NAVY	MARINE OFF.	MARINE ENL.	TOTAL MARINE	TOTAL MIL.	GRADED CIV.	UNGRADED CIV.	TOTAL CIV.	TOTAL MANPOWER
ALLOWANCE/ CEILING											
19	20	21	22	23	24	25	26	27	28	29	30

Manpower Listing

OICC ORGANIZATION NO. 3 (PROPOSED) $25 MILLION OR LESS WIP

MARP CODE SEG.	LINE	S/L	ACTIVITY CODE	ACTIVITY NAME	SPONSOR	DEPARTMENT	TRANSACTION NO.	DATE MO.	DAY	YR.	PAGE NO.
			— —				OFF. / ENL.				
01			02	03	04	05	06	07			08

SEQUENCE CODE/ P.D. NUMBER	MILITARY NOBC/ NEC/ MOS	DESIG/ RATE	GRADE	ALLOW-ANCE	BILLET/POSITION TITLE	MIL. OR CIV.	CIVILIAN SERVICE, SERIES GRADE/GROUP	NO. POSI-TIONS	REMARKS
09	10	11	12	13	14	15	16	17	18
					NOTE: Personnel service will be provided by the Overseas and Returning Placement Staff (ORPS) or the nearest Naval Activity, as appropriate.				
					CIVILIAN PERSONNEL				
					Civilian Pers. Liaison		GS-12	1	
					MILITARY SERVICES & SECURITY				
			LTjg	1	Military Services & Security Officer				
					AOICC FOR PROGRAMS & FINANCIAL MGT				
			CDR	1	AOICC for Progs & Finan. Mgt.		(*GS-14)		
					Secy-Steno		GS-4	1	
					Clerk-Typist		GS-3/2	1	
					LEVEL OF EFFORT/CONTRACT CONTROL PROG.				
			LT	1	Level of Effort Program Officer		(*GS-12)		
					PROGRAM MANAGEMENT OFFICE				
			LCDR	1	Prog. Mgt. Ofcr		(*GS-13)		

TOTALS	NAVY OFF.	NAVY ENL.	TOTAL NAVY	MARINE OFF.	MARINE ENL.	TOTAL MARINE	TOTAL MIL.	GRADED CIV.	UNGRADED CIV.	TOTAL CIV.	TOTAL MANPOWER
ALLOWANCE/ CEILING											
19	20	21	22	23	24	25	26	27	28	29	30

Manpower Listing — OICC ORGANIZATION NO.3 (PROPOSED) $25 MILLION OR LESS WIP

MARP CODE SEG.	LINE	S/L	ACTIVITY CODE	ACTIVITY NAME	SPONSOR	DEPARTMENT	TRANSACTION NO.	DATE MO.	DAY	YR.	PAGE NO.
			— —				OFF. / ENL.				
01			02	03	04	05	06	07			08

SEQUENCE CODE/ P.D. NUMBER	MILITARY NOBC/ NEC/ MOS	DESIG/ RATE	GRADE	ALLOW-ANCE	BILLET/POSITION TITLE	MIL OR CIV.	CIVILIAN SERVICE, SERIES GRADE/GROUP	NO. POSITIONS	REMARKS
09	10	11	12	13	14	15	16	17	18
					FINANCIAL MANAGEMENT DIVISION				
			LCDR	1	Fin. Mgt. Officer		(*GS-13)		
					CPAF Accountant		GS-12	1	
					Accountant		GS-12/11	1	
					Accounting Tech.		GS-9/7	2	
					Budget Anal.		GS-12/11	1	
					Budget Tech		GS-9/7	2	
					Clerk Typist		GS-3	1	
					ADMINISTRATIVE SERVICES DIVISION				
			LT	1	Admin. Services Officer		(*GS-12)		
					Clerk-Typist		GS-3/2	2	
					SERVICES & SUPPLY BRANCH				
			LTjg	1	Services & Supply Officer		(*GS-11)		
					Hsg Billeting Mgr		GS-7	1	
					Chauffeur		L.4	1	
					Supply Clerk		GS-5	1	
					Keypunch Opr		GS-5/4	1	

TOTALS	NAVY OFF	NAVY ENL.	TOTAL NAVY	MARINE OFF.	MARINE ENL.	TOTAL MARINE	TOTAL MIL.	GRADED CIV.	UNGRADED CIV.	TOTAL CIV.	TOTAL MANPOWER
ALLOWANCE/ CEILING											
19	20	21	22	23	24	25	26	27	28	29	30

Manpower Listing

OICC ORGANIZATION NO.3 (PROPOSED) $25 MILLION OR LESS WIP

MARP CODE SEG.	LINE	S/L	ACTIVITY CODE	ACTIVITY NAME	SPONSOR	DEPARTMENT	TRANSACTION NO.	DATE MO.	DAY	YR.	PAGE NO.
			— —				OFF. / ENL.				
01			02	03	04	05	06	07			08

SEQUENCE CODE/ P.D. NUMBER	MILITARY NOBC/ NEC/ MOS	DESIG/ RATE	GRADE	ALLOW-ANCE	BILLET/POSITION TITLE	MIL. OR CIV.	CIVILIAN SERVICE, SERIES GRADE/GROUP	NO. POSITIONS	REMARKS
09	10	11	12	13	14	15	16	17	18
					MAIL, FILE AND REPRODUCTION BRANCH				
					Mail & File Clerk		GS-3	1	
					Central Files Tech.		GS-7	1	
					Xerox Operator		WB-7	1	
					ROICC's				
			LCDR	2	ROICC's		(*GS-13)		
			LT	1	AROICC		(*GS-12)		
					Constr. Reps./Inspectors		GS-11/9/7	6	
					AOICC FOR OPERATIONS				
			CDR	1	AOICC for Opns		(*GS-14)		
					Secy-Steno		GS-4	1	
					Clerk-Typist		GS-3/2	1	
					CONTRACT ADMINISTRATION/CONTRACTOR PERSONNEL RELATIONS OFFICE				
					Contract Specialist		GS-13/12	1	
					CONSTRUCTION DIVISION				
			LCDR	1	Contru. Ofcr		(*GS-13)		
					Constru.Reps/Inspectors		GS-11/9	2	

TOTALS	NAVY OFF	NAVY ENL.	TOTAL NAVY	MARINE OFF.	MARINE ENL.	TOTAL MARINE	TOTAL MIL.	GRADED CIV.	UNGRADED CIV.	TOTAL CIV.	TOTAL MANPOWER
ALLOWANCE/ CEILING											
19	20	21	22	23	24	25	26	27	28	29	30

Manpower Listing — OICC ORGANIZATION NO.3 (PROPOSED) $25 MILLION OR LESS WIP

MARP CODE SEG.	LINE	S/L	ACTIVITY CODE	ACTIVITY NAME	SPONSOR	DEPARTMENT	TRANSACTION NO.	DATE MO.	DAY	YR.	PAGE NO.
			— —				OFF. / ENL.				
01			02	03	04	05	06	07			08

SEQUENCE CODE/ P.D. NUMBER	MILITARY NOBC/ NEC/ MOS	DESIG/ RATE	GRADE	ALLOW-ANCE	BILLET/POSITION TITLE	MIL. OR CIV.	CIVILIAN SERVICE, SERIES GRADE/GROUP	NO. POSI-TIONS	REMARKS
09	10	11	12	13	14	15	16	17	18
					DESIGN DIVISION				Design Division staffing was developed with 25% of design done in-house.
			LCDR	1	Supv. Gen. Eng.		(*GS-14)		
					Secy. (Steno)		GS-4	1	
					ASSIST. FOR DESIGN MGT				
					Supv. Gen. Eng.		GS-13	1	
					Prog. Anal.		GS-11	1	
					Clerk-Steno		GS-3	1	
					Plan Files				
					Supv. File Clerk		GS-4	1	
					File Clerk		GS-3/2	1	
					ASSIST FOR VALUE ENG.				
					Gen. Eng.		GS-13		
					ASSIST. FOR FIRE PROTECTION				
					Supv. Fire Prev. Eng.		GS-13	1	
					Fire Prev. Eng.		GS-12	1	

TOTALS	NAVY OFF.	NAVY ENL.	TOTAL NAVY	MARINE OFF.	MARINE ENL.	TOTAL MARINE	TOTAL MIL.	GRADED CIV.	UNGRADED CIV.	TOTAL CIV.	TOTAL MANPOWER
ALLOWANCE/ CEILING											
19	20	21	22	23	24	25	26	27	28	29	30

Manpower Listing — OICC ORGANIZATION NO. (PROPOSED) $25 MILLION OR LESS WIP

MARP CODE SEG.	LINE	S/L	ACTIVITY CODE	ACTIVITY NAME	SPONSOR	DEPARTMENT	TRANSACTION NO.	DATE MO.	DAY	YR.	PAGE NO.
			— —				OFF. / ENL.				
01			02	03	04	05	06	07			08

SEQUENCE CODE/ P.D. NUMBER	MILITARY NOBC/ NEC/ MOS	DESIG/ RATE	GRADE	ALLOW-ANCE	BILLET/POSITION TITLE	MIL. OR CIV.	CIVILIAN SERVICE, SERIES GRADE/GROUP	NO. POSI-TIONS	REMARKS
09	10	11	12	13	14	15	16	17	18
					ARCHITECHURAL BRANCH				
					Supv. Arch.		GS-13	1	
					Arch.		GS-12	2	
					Arch.		GS-11	1	
					STRUCT.-CIVIL ENG. BRANCH				
					Supv. Struct. Eng.		GS-13	1	
					Struct. Eng.		GS-12	1	
					Civil Eng.		GS-12	2	
					Struct. Eng.		GS-11	1	
					MECH.-ELECT. ENG. BRANCH				
					Supv. Mech. Eng.		GS-13	1	
					Mech. Eng.		GS-12	1	
					Elect. Eng.		GS-12	2	
					SPECS-COST ENG. BRANCH				
					Supv. Gen. Eng.		GS-13	1	
					Gen. Eng.		GS-12	2	
					Clerk Typist		GS-3	1	
			Totals	15	Military			60	Civilians

TOTALS	NAVY OFF.	NAVY ENL.	TOTAL NAVY	MARINE OFF.	MARINE ENL.	TOTAL MARINE	TOTAL MIL.	GRADED CIV.	UNGRADED CIV.	TOTAL CIV.	TOTAL MANPOWER
ALLOWANCE/ CEILING											
19	20	21	22	23	24	25	26	27	28	29	30

OFFICER IN CHARGE OF CONSTRUCTION

The OICC is responsible for accomplishing his assigned mission of administering specific construction, architectural and engineering contracts for the Navy, and for other Military Services, DOD and Federal agencies and Engineering Field Divisions.

MAJOR FUNCTIONS.

In carrying out his responsibilities, the OICC commands and directs a staff and work force in performance of the following tasks and functions:

a. Design. Provides architectural and engineering design services for public works and public utilities.

b. Construction. Provides for the construction of public works and public utilities.

c. Contract Administration.

(1) Prepares, awards and administers contracts for architectural and engineering services, utilities, and construction (including alteration, repair, maintenance and demolition contracts, when required.).

(2) Designates Resident Officers in Charge of Construction, and furnishes contract administration services and support therefor.

(3) Supervises contractual practices, procedures, performance and staffing of subordinate contract administration offices.

(4) Prepares, negotiates and executes utility service agreements for area activities, including orders for telephone communications facilities, and exercises technical direction of local telephone services.

d. Consulting Services and Technical Assistance. Provides consultation in safety aspects and renders technical advice and assistance to others relative to the design and construction of public works and public utilities.

c. Special Tasks and Functions. Provides special services as required.

DEPUTY OFFICER IN CHARGE OF CONSTRUCTION

The Deputy Officer in Charge of Construction manages and directs the effort of the OICC organization. He performs the day-to-day management and control over workload, staff and operating components, and other resources to achieve the objectives of the OICC. The Deputy performs these functions within the authority delegated to him by the OICC. During official absences of the OICC, the Deputy becomes the Acting OICC and exercises full authority of the OICC.

EXECUTIVE ASSISTANT

MAJOR FUNCTIONS

1. Assists the OICC and DOICC in exercising direct management and control over all operations and resources to ensure efficient and economical accomplishment of work on a continuing basis.

2. Develops and recommends operating policies; promulgates as approved and monitors practices to ensure compliance or change, as required.

3. Directs operating components, particularly advisory and administrative, in performing surveys, reviews and analyses of problem areas and objective-type planning. Takes appropriate action to initiate and complete specific actions, or achieve goals and objectives, as prescribed or set by the OICC or DOICC.

4. Monitors internal practices and procedures, recommends and implements changes and revisions as necessary; all to ensure orderly flow and efficient and economical performance of work.

5. Coordinates matters involving two or more operating components; resolves procedural conflicts and problems or recommends corrective action.

6. Coordinates preparations, arrangements and schedules for visiting dignitaries.

7. Performs special assignments or projects as required or assigned.

8. Reviews, approves and signs all OICC directive type publications, in the absence of the Deputy OICC.

COUNSEL.

MAJOR FUNCTIONS.

1. Serves as legal advisor to the OICC. Reviews and provides opinion, comment and advice as to form and legality of contracts and agreements and amendments, changes, and modifications thereto, including change orders, letters of award, subcontracts, and other pertinent documents prior to execution or approval by the OICC.

2. Provides legal services and advice to all components of the OICC organization on all matters relating to business and command functions including, but not limited to:

a. The acquisition, custody, management, taxation, and disposition of real and personal property; housing; transportation; utilities; labor relations; and the procurement of services, including the budgetary and accounting aspects thereof.

b. Procurements made in accordance with the Armed Services Procurement Regulations and Navy Procurement and other directives and procurements which deviate therefrom.

c. The interpretation of United States and foreign laws and military and non-military regulations as they relate to the OICC his personnel, contractors, and their personnel.

d. Preparation, review, and interpretation of documents, laws, regulations and agreements relative to the occupancy of housing, and office facilities.

REAL ESTATE.

This function will initially be TAD from an OICC or EFD. Await early developments to determine if real estate activity will be of sufficient long term magnitude to merit permanent staff.

MAJOR FUNCTIONS.

1. Acquires real estate by fee simple, easement, lease, permit, license, transfer or exchange.

2. Disposes of real estate by fee simple, easement, lease, permit, license, transfer or exchange.

3. Manages and controls real property in all naval shore activities within the area of coordination whether active or inactive.

4. Prepares and submits to the U.S. Attorney for filing in court all documents pertaining to settlement of condemnation acquisitions.

5. Prepares and examines title data and issues Certificates of Title.

6. Prepares Abstracts of Title, including revisions and additions thereto.

7. Provides complete title search and land ownership information, as required.

8. Examines and prepares appraisal reports on all real estate within the area proposed for acquisition for the Navy, Air Force, Army and Coast Guard or proposed for disposition by the Armed Forces.

9. Contracts land owners and claimants of all such real estate proposed for acquisition and disposition, and negotiates matters pertaining thereto.

10. Examines and appraises private and public lands and property for FHA, upon request.

11. Performs such other functions as may be directed.

PUBLIC AFFAIRS OFFICE

MAJOR FUNCTIONS.

1. Write and release news stories about OICC construction efforts and OICC personnel, both military and civilian; accompany news released with appropriate photographs.

2. Arrange interviews of OICC personnel[by representatives of the news media; accompany newsmen to construction sites as an aid to preparation of feature articles.

3. Advise and assist the OICC in public relations matters.

4. Prepare an annual fiscal year history from data received from other OICC codes.

5. Develops and writes in final form a historical record detailing all of the major aspects of planning, programming, funding and experiences, especially the unique conditions in-country, problems encountered and the solutions to them.

6. Documents for historical purposes significant events involving the OICC role, mission and participation in administration of design and construction contracts.

7. Maintains historical record files; develops and monitors procedures for selection and input of data for historical purposes.

MILITARY SERVICES & SECURITY OFFICE

MAJOR FUNCTIONS.

1. Provides military personnel services for all Navy personnel assigned to the OICC.

2. Plans, develops, administers and monitors the Security Program for the OICC, DIRCON's, ROICC's and Contractor organizations, in compliance with applicable policy and directives.

3. Organizes, mans, and supervises OICC guard forces, consistent with regulations prescribed by higher authority.

4. Develops procedures for issuance of identification, privilege, and ration cards and special passes for all OICC, TAD and contractor personnel.

5. Maintains central classified files.

6. Maintains message files, classified and unclassified.

7. Administers the OICC message, telephone, radio and other inter and inter communications systems.

8. Provides travel and reservation booking services to the entire OICC.

SECURITY BRANCH

MAJOR FUNCTIONS.

1. Plans, develops, administers and monitors the Security Program for the OICC, DIRCON's, ROICC's, and Contractor organizations, in compliance with applicable policy and directives.

2. Organizes, mans, and supervises OICC guard forces, consistent with regulations prescribed by higher authority.

3. Develops procedures for issuance of identification, privilege, and ration cards and special passes for all OICC, TAD and contractor personnel.

COMMUNICATIONS AND CLASSIFIED FILES BRANCH

MAJOR FUNCTIONS.

1. Maintains central classified files.

2. Maintains message files, classified and unclassified.

3. Administers the OICC message, telephone, radio, and other intra and inter communications systems.

4. Provides military personnel services for all Naval personnel assigned to the OICC.

5. Provides travel and reservation booking services to the entire OICC. Prepares are a clearance requests. Processes applications for passports and visas for the OICC, as well as for personnel of some civilian contractors.

CIVILIAN PERSONNEL OFFICE

MAJOR FUNCTIONS.

1. Interprets, disseminates and monitors compliance with policies, regulations and procedures concerning civilian personnel programs.

2. Coordinates personnel recruiting and classification activities which will be provided by the overseas and Returning Placement Staff (ORPS) or the nearest Naval Activity.

3. Provides advice and assistance to line managers in carrying out their responsibilities of employment management and employee development.

4. Provides advice to the OICC and advice and assistance to employees concerning all personnel matters.

5. Develops, administers and promotes the OICC incentive and special awards program.

6. Coordinates civilian welfare and employee services, including health and life insurance, commercial services, recreational activities, etc., and is responsible for civilian personnel records.

ASSISTANT OFFICER IN CHARGE OF CONSTRUCTION (AOICC)

FOR

PROGRAMS AND FINANCIAL MANAGEMENT

MAJOR FUNCTIONS.

1. Responsible for the development, planning and scheduling of management and financial goals, objectives and targets consistent with the policy of the OICC.

2. Exercises command supervision over and directs the efforts of the Administrative Services Division, Financial Management Division, Program Management Office, Information and Systems Division, and the Level of Effort/Contract Control Program.

LEVEL OF EFFORT PROGRAM/CONTRACT CONTROL

MAJOR FUNCTIONS.

1. Develops and maintains a management and control system which provides information rapidly for decisions regarding continuation of contractor effort, acceptance of new work or termination of currently assigned projects.

2. Analyzes the total contract balance between funds available, workload status, and contractor assets (labor, materials, equipment and plants).

3. Prepares program estimates based on 50% to 100% drawings and specifications prepared by Design Division and A&E firms for in-country work for U.S. Contractors.

4. Confirms realistic pricing of all construction materials.

5. Analyzes cost of various construction techniques applicable to the type of work involved.

6. Investigates problem areas of construction costs through actual field investigation.

7. Provides cost information to AKE estimators.

8. Responsible for the training of new personnel.

FINANCIAL MANAGEMENT DIVISION

MAJOR FUNCTIONS.

1. Coordinates and integrates budget, accounting and payroll functions; develops and maintains a sound financial system for effective management and control of OICC operating funding resources.

2. Plans, develops, coordinates and monitors the OICC operating budget.

3. Establishes and maintains official accounting records as required.

4. Provides liaison with service components or other agencies in the area of financial management.

5. Provides consulting services and advice to OICC components on all financial matters.

6. Conducts reviews of various reports and data covering actual performance; correlates with financial plans and reports to comptroller indicated impacts on OICC organization, operations or plans; makes appropriate recommendations.

CPAF ACCOUNTING REVIEW BRANCH

MAJOR FUNCTIONS.

1. Develops and prescribes systems and procedures for accounting and reporting of CPAF funds as required.

2. Reviews and evaluates the contractor's accounting systems and procedures to ensure compliance with prescribed regulations, instructions and approved procedures.

3. Reconciles and analyzes contractor's cost reports.

4. Monitors the contractor's time keeping, material handling and camp operations.

5. Provides assistance to the Property Administrator in monitoring the contractor's Systems of accountability for government property.

6. Provides liaison with the Defense Contract Audit Agency(DCAA) staff in contract financial matters.

7. Coordinates and provides data relative to appropriations, International Balance of Payments Program, reports requirements, and related matter between the contractor and the Comptroller.

8. Conducts CPAF cost reviews, when required or requested.

ACCOUNTING BRANCH

MAJOR FUNCTIONS.

1. Maintains official accounting records for all MILCON, MCON and MCON reimbursable funds received by the OICC, excluding administrative funds.

2. Reviews lump sum contractor progress payment requests for fiscal adequacy and processes for payment.

3. Prepares recurring and special accounting and statistical reports, as required.

4. Prepares and issues fund authorization documents to service component activities or other agencies covering construction program funds.

5. Provides financial advice to all components of the OICC, within scope of assigned responsibility.

6. Reviews all obligating and expenditure documents for proper citation of accounting data.

7. Prepares requests for Adjustment and Collections under the MCON Program and forwards to Navy Finance Center, Washington. Prepares SF-1080 billings to sponsors on reimbursable funds received via MIPRs and NAVCOMPT 140s.

8. Prepares overhead distribution (SIOH Collections), based on "billed" contractor accrued costs, to construction projects.

BUDGET BRANCH

MAJOR FUNCTIONS.

1. Collects, reviews and revises OICC Department/Division operating budget submissions; evaluates requirements and justification data.

2. Prepares annual OICC operating budgets and financial plans, and revisions thereto.

3. Reviews performance against financial plans, analyzes variances, and recommends remedial action or financial adjustments.

4. Reviews requests for work or services, as well as procurement actions; certifies availability of funds or takes other appropriate action.

5. Prepares monthly operating funds status reports and estimates of projected requirements for OICC management; submits to higher authority as required.

6. Develops procedures for control of administrative funds; writes, implements and maintains current all required instructions or other publications.

7. Maintains official accounting records for OICC operating funds; determines propriety of charges thereto; makes appropriate recommendations for corrective or alternate accounting.

8. Prepares public vouchers for payment to vendors and contractors which site OICC operating funds.

9. Receives, controls and distributes checks (received from Disbursing Office) to vendors.

10. Prepares time and attendance reports and submits to servicing payroll office, along with necessary personnel action documents. Reviews the civilian payroll (US, TCN and indigenous) for errors, and initiates corrective action. Processes civilian pay allotments. Prepares, confirms and distributes the indigenous cash payroll and distributes U.S. and TCN employee's pay checks; processes claims of discrepancies in pay. Maintains leave records of US and TCN employees. Prepares and maintains current all instructions or other publications pertaining to timekeeping, payroll or leave matters.

INFORMATION AND SYSTEMS DIVISION

MAJOR FUNCTIONS.

1. Develops and maintains OICC ADP information systems and acts as liaison for Contractor developed ADP systems.

2. Prepares and maintains all instructions, notices and manuals pertaining to data processing.

3. Conducts an overall appraisal covering actual performance versus planned goals, targets or objectives; makes appropriate recommendations.

4. Provides advice to OICC components on the type, feasibility and availability of ADP services to accomplish specific programs.

5. Insures adequate graphic arts service to OICC components.

6. Insures proper display of information for official briefings.

MANAGEMENT INFORMATION CENTER DIVISION

MAJOR FUNCTIONS.

1. Provides current information on key events and projects of interest to top management.

2. Serves as a focal point for meetings to review the status of the construction effort to allow a meaningful comparison between planned and actual progress.

3. Provides a visual display of pertinent information concerning the construction effort for official briefings.

4. Develops, prepares, and publishes illustrative material highlighting the construction program.

5. Conducts special studies covering data management matters as required.

6. Collects reports of management action against plans, conducts independent review of problem areas, and submits recommendations to the Director, Information and Systems Division.

7. Provides graphic arts services.

AUTOMATIC DATA PROCESSING BRANCH

MAJOR FUNCTIONS.

1. Designs, programs and maintains computerized management information systems for the OICC.

2. Develops, implements and monitors procedures necessary to insure an operable ADP system.

3. Reviews concept and status of Contractor developed ADP systems to insure compatibility with OICC systems and related management requirements.

4. Responsible for data quality control; recommends corrective actions as required.

5. Codes information for computer input; operates flexowriter and key punch units.

6. Exercises technical control over Contractor's developing ADP programs, program revisions and related work.

7. Prepares, publishes and maintains current, all instructions, notices or manuals pertaining to data production, processing) use dissemination or storage.

ADMINISTRATIVE SERVICES DIVISION

MAJOR FUNCTIONS.

1. Provides common administrative services to all components of the OICC organization. Develops and carries out the general administration policy of the OICC as applicable to OICC, DIRCON's, and ROICC's.

2. Administers the OICC public works, housing and real estate, transportation and maintenance programs.

3. Provides mail, messenger, publications, central files and stenographic and typing services.

4. Provides general management of requisition, procurement actions, and property control.

PUBLIC WORKS BRANCH

MAJOR FUNCTIONS.

1. Provides temporary and permanent government quarters for OICC and DEPSEA civilian and military personnel; assists TDY personnel in locating and obtaining quarters.

2. Provides transportation for the OICC personnel as authorized.

3. Serves as the ROICC for minor alterations contracts involving the OICC leased facilities.

4. Provides maintenance, excluding janitorial services, for the OICC leased facilities.

MOTOR POOL SECTION

MAJOR FUNCTIONS.

1. Operates the OICC Motor Pool, manages all transportation assets; makes vehicle assignments; conducts utilization surveys, and reports thereon.

2. Receives requests for motor transportation and schedules dispatch of motor vehicles.

3. Maintains records of transportation activity such as driver qualifications, mileage, repairs, maintenance and accident reports.

4. Schedules maintenance and repair of vehicles.

5. Conducts driver training as required.

6. Prepares reports as required by the OICC and higher authority.

7. Develops the OICC transportation requirements and makes recommendations for adjustments in schedules, fleet and personnel as required.

HOUSING SECTION

MAJOR FUNCTIONS.

1. Represents the OICC on all housing and real estate matters pertaining to office space and housing for U.S. military and civilian personnel and selected Third Country Nationals, both permanent duty and TAD.

2. Negotiates for leasing housing/office spaces and monitors the OICC contractor and civilian private leases, locates and inspects local housing for potential new leases.

3. Effects liaison with other military/civilian agencies.

4. Reviews practices and performance of landlords to insure compliance with leases.

5. Manages and supervises the operation and maintenance of all the OICC leased quarters.

6. Provides the OICC protocol services for arrivals at the airport.

7. Maintains TAD Status Control Board and Hotel Accommodation Program.

8. Manages, maintains and controls the OICC Household Furniture Inventory.

9. Is responsible for maintenance of all OICC facilities.

10. Acts as ROICC for contracts covering remodeling and rehabilitation of the OICC facilities.

SERVICES AND SUPPLY BRANCH

MAJOR FUNCTIONS.

1. Maintains records of performance of firms providing supplies and services.

2. Maintains property records on Class III plant property other than minor property, and conducts periodic inventories.

3. Provides services for repair and maintenance of office equipment and furniture.

PROPERTY CONTROL SECTION

MAJOR FUNCTIONS.

1. Stores and issues office supplies.

2. Receives and warehouses material and equipment, makes receiving reports.

3. Maintains accountable records covering non-expendable class III Property. Verifies accuracy on a cyclical basis by physical count. Establishes and maintains stock levels.

4. Maintains custody of expendable supplies and warehousing of Class III plant property. Issues as required.

REQUISITION SECTION

MAJOR FUNCTIONS.

1. Receives, screens and processes requisitions.

2. Determines sources of supply and most economical and expeditious means of procurement.

3. Prepares consolidated requisitions and forwards to ROICCPAC GSA; maintains suspense file and takes follow-up action, as required.

4. Maintains records of performance of contractors and business firms.

5. Prepares contract and purchase requests.

MAIL FILE & REPRODUCTION BRANCH

MAJOR FUNCTIONS.

1. Maintains OICC unclassified central correspondence and directives files.

2. Provides all duplicating and reproduction services except ozalid.

3. Provides mail, messenger and guard mail service and such other office services, as required.

4. Maintains and controls the OICC directive8 publication system.

5. Implements and operates a Records Management Program, including forms controls, maintenance of a records holding area, and time-phased retirement of records. Conducts formal training sessions for clerical personnel in correspondence procedures and standard files maintenance.

6. Operates OICC mail room, including distribution of incoming mail (official mail only) and messages, routing of copies, indicating action addressee, suspense follow-up, and final review of correspondence prior to release for proper format.

7. Administers OICC Reports Control Program.

MAIL SECTION

MAJOR FUNCTIONS.

1. Receives, reviews, distributes to action addressee, and files incoming correspondence.

2. Receives, reviews, distributes, and mails outgoing official correspondence.

3. Operates and maintains the OICC mail room and provides guard mail and OICC messenger service throughout the local area.

FILE SECTION

MAJOR FUNCTIONS.

1. Maintains OICC unclassified central correspondence;. and directives.

2. Maintains suspense file on correspondence and reports due out and notifies responsible Code to assure timely submissions.

3. Publishes and distributes all OICC directives.

4. Maintains central library of directive publications.

REPRODUCTION SECTION

MAJOR FUNCTIONS.

1. Provides or administers OICC general printing and duplicating requirements.

2. Assembles and collates material printed or produced in the OICC organization.

3. Provides routine maintenance of the duplicating equipment.

PROGRAM MANAGEMENT OFFICE

MAJOR FUNCTIONS.

1. Coordinates planning, design and construction of assigned projects to assure their accomplishment within available funds and authorized scope.

2. Maintains updated construction program information to insure accurate reporting to NAVFAC and other interested or responsible agencies and field activities.

3. Prepares OICC construction status reports.

4. Initiates and coordinates Engineering Service Requests (ESR's) for the OICC.

5. Monitors design and construction progress against planned objectives and schedules; recommends appropriate corrective action when necessary.

6. Serves as the sponsor’s primary contact and source of information concerning the development of the construction program.

SPONSOR PROGRAM MANAGERS

MAJOR FUNCTIONS.

1. The Sponsor Program Manager is responsible for coordinating and expediting the planning, design, land acquisition and construction of the assigned projects. It includes the coordination necessary to ensure the timely completion of all phases of the work within available funds and authorized scope. The Sponsors serve as the central clearing house and principal point of contact within the OICC organization on matters requiring coordinated management.

DIRECTOR OF CONSTRUCTION

MAJOR FUNCTIONS.

1. Represents the OICC on all contractor construction matters within his area, and works continuously with the contractor's authorized representatives to plan, schedule, manage and accomplish assigned work within established time frames with minimal expenditure of available assets (men, materials, equipment and money).

2. Supervises all Resident Officers in Charge of Construction (ROICC) and/or Resident Engineers in Charge of Construction (REICC) assigned to the projects in his area.

3. Reviews and approves major field changes when increased scope of funding is not involved. Recommends change orders to the OICC as considered necessary.

4. Coordinates efforts of ROICCs/REICCs and contractors to solve field problems regarding utilization of manpower, material and/or equipment to insure the maximum effort is exerted toward meeting Readiness Operational Date (ROD) and Beneficial Occupancy Date (BOD) established.

5. Consults with and advises the OICC and OICC components concerning general planning, area progress and requirements to assure execution and completion of construction as planned.

6. Reviews field inspection requirements and recommends assignment of OICC construction engineers and inspectors.

7. Serves as liaison for the OICC and the contractor effort with military agencies and other agencies of the U.S. in his area, as appropriate.

8. Makes continuous evaluation of the performance and capabilities of the cost reimbursable contractor. Prepares and submits evaluation reports to the OICC for use by the award fee rating board. Performs similar evaluation and makes comparable recommendations regarding other types of contracts, such as CRCC.

9. Serves as the OICC representative in dealings with local officials concerning construction, personnel, real estate and related matters to the extent necessary to ensure that such matters are properly coordinated and that the OICC's interests are understood and protected.

ASSISTANT OFFICER IN CHARGE OF CONSTRUCTION FOR OPERATIONS

MAJOR FUNCTIONS.

1. Exercises Command supervision over and directs the efforts of the Directors of Construction, Design, Contracts, Resources, and the Contractor Personnel Relations Office.

2. Executes contractual documents within the authority assigned to the OICC.

CONTRACTOR PERSONNEL RELATIONS OFFICE

MAJOR FUNCTIONS.

1. Recommends and implements OICC Policy concerning the total contractor labor relations program and the enforcement of all contract labor provisions.

2. Establishes and maintains close working relationships with local labor officials and top representatives of the Labor Ministry of the country involved.

3. Analyzes local labor regulations and laws applicable to indigenous and foreign labor determine degree of applicability to OICC Contractors and Sub-Contractors.

4. Analyzes the effect of proposed/or approved changes in the Labor Code and regulations on Contractor operations and labor relations programs and develops appropriate OICC Policy statements.

5. Coordinates with U.S. Embassy and DOD elements to assure a unified approach acceptable to all parties in labor relations areas.

6. Reviews labor clauses in proposed and/or approved contracts, develops formal policy statements which will coincide with regulations and applicable labor practices in the area. Establishes internal procedures to assure contractor compliance.

7. Responsible for developing and implementing recommendations leading to OICC policy on contractor wage, salary and related compensation programs and the enforcement thereof.

8. Reviews and analyzes all contractor proposals for changes to established policies, practices and procedures, and evaluates the adequacy and desirability of the proposals in light of sound management principles, pertinent rules and regulations.

9. Participates in interservice and interagency meetings representing OICC on wage administration and related compensation matters.

10. Analyzes proposed policies in terms of impact on contractors established wage and salary programs.

11. Coordinates with contractor management on organization and manning structures in areas of demonstrated deficiences (people, grades, etc). Recommends necessary changes to permit economical achievement of goals.

12. Conducts and participate in special studies for purposes of resolving special non-recurring problems. (Survey's of pay-fringe benefits, comparable pay, and program practices).

13. Analyzes potential labor problems and impact on programs. Recommends corrective action.

14. Maintains contact with management officials of contractors' U.S. Agencies.

DESIGN DIVISION

The Division Director is designated the Functional Manager for the Design Division and the Program Manager for "Engineering and Design." He is responsible for the execution of the design phase of the Military Construction (MCON) Program and for the implementation of NAVFAC architectural and engineering policies, criteria, and practices for the economical design and construction of shore facilities to best satisfy the functional/operational requirements. He is responsible for the technical adequacy and quality of all engineering and design; and the determination of engineering and design staffing required to support other programs; and the Management of Design.

MAJOR FUNCTIONS.

1. Assures maximum utilization of existing criteria or previous designs executed either in his own OICC or other EFDs/OICCS in obtaining the optimum construction of facilities at the most economical design cost.

2. Provides Engineering and Design support for all NAVFAC Programs. (Planning, Construction, Real Estate, Family Housing and Operations/ Maintenance.)

3. Prepares (IN-HOUSE or by A&E) PCEs, plans, specifications, and cost estimates for construction, repair, maintenance or alternations for shore facilities including those funded from MCON, MCNR, Interagency, Family Housing, O&MN, RDT&E and other funds.

4. Administers architectural and engineering contracts when engineering and design is accomplished by A&E contracts.

5. Reviews designs and drawings prepared by PWDs, PWCs, Architectural and Engtneering contractors and construction or equipment contractors, and recommends appropriate revisions to ensure compliance with established criteria and sound engineering practice.

6. Analyzes and evaluates engineering and architectural phases of correspondence and reports and prepares technical replies, comments and recommendations.

7. Responsible for the technical excellence of in-house architecture, engineering and design and A&E prepared architecture, engineering and design and recommends corrective actions as appropriate to obtain this excellence.

8. Initiates and monitors programs for development of excellence in architecture, engineering and design.

9. Utilizes computers and mechanical aids to maximum economical level in engineering, design, and preparation of drawings.

10. Acts as the focal point at OICC for the NAVFAC Professionalism Program and participates in planning and implementing professional development programs.

11. Accomplishes special studies, prepares formal reports, briefing material and progress reports, etc., relating to design, engineering and architecture functions of the OICC.

12. Reviews and furnishes, upon request, recommendations on technical problems concerning the maintenance and operation of public works and public utilities.

13. Initiates, sponsors and participates in projects for the improvement of materials, equipment, construction techniques and engineering, design and architectural practices, policies and criteria.

14. Administers NAVFAC's Engineering Investigation Program.

15. Provides OICC design representation of Government and non-Government committees.

16. Conducts, or arranges for the conducting by others of, field, hydrographic and subsurface surveys.

17. Executes Fire Protection programs.

18. Maintains OICC plan and technical record files.

19. Participates on Boards of Selection and Award of A&E and E&S Contracts.

20. Coordinates and administers the Value Engineering Program.

ASSISTANT FOR VALUE ENGINEERING

MAJOR FUNCTIONS.

1. Develop the Value Engineering Program for the OICC.

2. Select value engineering projects, and conduct value Engineering reviews and studies.

3. Promote and coordinate value engineering support from other field divisions components.

4. Promote contractor participation in value engineering.

5. Review and approve value engineering congractors' proposals.

6. Prepare and support for audit, value engineering proposals and reports.

7. Conduct value engineering training in the OICC office and at field activities.

ASSISTANT FOR DESIGN MANAGEMENT

MAJOR FUNCTIONS.

1. Perform the functions outlined under the Design Division as they concern management of design.

2. Establish refined staffing criteria and workload indicators for engineering and design functions in consonance with NAVFAC Program III/WC 04 staffing criteria.

3. Analyze PCE and final design programs, other program support, and calculate man-year/resource requirements for the annual and five-year budgets for the Design Division.

4. Analyze overall progress of all program elements against program/the 04 objectives; appraise achievement of organizational components in the prosecution of Program III and support of other programs; pin-point and evaluate areas of imbalance and unsatisfactory performance; make recommendations for specific corrective measures and revisions of Design Division policies and/or procedures to assist the design director in exercising and improving management of design.

5. Analyze data being provided by reports in use; monitor existing reporting procedures and systems and recommend revisions thereto or new systems as appropriate to provide most efficiently the needed data to assess status and progress of management of design.

6. Coordinate and combine data received from WC 04 components; accomplish special studies and assignments relating to the development and implementation of managerial responsibilities; prepare periodic and special briefing information for the division director and higher authority.

7. Evaluate cost effectiveness and efficiency of engineering and design.

8. Analyze past, current, and future design workloads, and implement procedures for maximum utilization of existing criteria and previous designs executed in his own or other field components in obtaining the optimum construction of facilities at the most economical design cost.

9. Administer the Quality Control Program for the Engineering and Design Division, including development of policy, monitoring of operations, maintenance of files, compilation of records and statistical data, evaluation of performance, and recommendation of corrective action.

10. Administer the NAVFAC professionalism Program, maintain files, compile records and statistical data, and prepare directives in support of the design director in his capacity as OICC focal point for professionalism.

11. Administer NAVFAC Engineering Investigation Program, including implementation of policy, solicitation of project proposals, analysis and evaluation of submitted project proposals, development of integrated priority lists, etc.

12. Provide input data for the OICC's Management Information Center to display progress of Program III/WC 04 toward meeting program/ functional objectives.

13. Provide scheduling and programming for accomplishment of WC 04 workload.

14. Insure that the total design function is performed as economically and efficiently as possible, not only on a project basis but on a total program basis.

15. Administer the Technical Data Management Program.

16. Maintain and control plan files and technical records and the division's technical reference library; provide 105mm film reproduction, distribution, and filing system for "as built" and other drawings.

ASSISTANT FOR FIRE PROTECTION ENGINEERING

MAJOR FUNCTIONS.

1. Perform the functions outlined under the Design Division as they concern the field of fire protection.

2. Inspect facilities in process of alteration or construction for inclusion of fire protection features.

3. Perform fire protection engineering surveys of all naval activities, including industrial reserve plants.

4. Inspect and test fire extinguishing, control, and alarm equipment and systems.

5. Perform technical investigations (jointly with the district fire marshal) of unusual or major fires.

6. Prepare reports, as required, concerning fire protection engineering.

7. Responsible for technical adequacy and quality of all fire protection functions under Design Division cognizance.

ARCHITECTURAL BRANCH

MAJOR FUNCTIONS.

1. Perform the functions outlined under the Design Division as they concern the field of architecture.

2. Responsible for technical adequacy and quality of all architectural functions under Design Division cognizance.

CIVIL ENGINEERING BRANCH

MAJOR FUNCTIONS.

1. Perform the functions outlined under the Design Division as they concern the field of civil engineering.

2. Responsible for technical adequacy and quality of all civil engineering functions under Design Division cognizance.

STRUCTURAL ENGINEERING BRANCH

MAJOR FUNCTIONS.

1. Perform the functions outlined under the Design Division as they concern the field of structural engineering.

2. Responsible for technical adequacy and quality of all structural functions under Design Division cognizance.

SPECIFICATIONS BRANCH

MAJOR FUNCTIONS.

1. Perform the functions outlined under the Design Division as they concern the field of specifications.

2. Responsible for technical adequacy and quality of all specifications functions under Design Division cognizance.

MECHANICAL ENGINEERING BRANCH

MAJOR FUNCTIONS.

1. Perform the functions outlined under the Design Division as they concern the field of mechanical engineering.

2. Responsible for technical adequacy and quality of all mechanical functions under Design Division cognizance.

COST ENGINEERING BRANCH

MAJOR FUNCTIONS.

1. Perform the functions outlined under the Design Division as they concern the field of cost engineering.

2. Responsible for technical adequacy and quality of all cost engineering functions under Design Division cognizance.

ELECTRICAL ENGINEERING BRANCH

MAJOR FUNCTIONS.

1. Perform the functions outlined under the Design Division as they concern the field of electrical engineering.

2. Responsible for technical adequacy and quality of all electrical functions under Design Division cognizance.

CONTRACTS DIVISION

MAJOR FUNCTIONS.

1. Negotiate and administer Lump Sum Construction, Architect and Engineering and Engineering Services (A-E/E-S), and Cost Plus Award Fee (CPAF) contracts and modifications thereto.

2. Provide guidance to ensure that procurement procedures are in compliance with Armed Services Procurement Regulations, Navy Procurement Directives, NAVFAC P-398 and other procurement directives.

3. Assemble plans, specifications, government estimates and funds, assuring that all documents are complete and in order prior to soliciting proposals or issuing invitation for bids.

4. Participate as member of Change Order and Negotiation Boards; issue invitations for bid and requests for proposals; initiate request for higher level approval to negotiate and award; when required, serve as member-recorder of negotiation boards for contracts and modifications thereto; prepare board reports, notices of awards, contracts and change orders.

5. Provide price and cost analysis.

6. Coordinate with the Counsel for the required legal sufficiency of contractual documents and with components of the OICC for receipt and scheduling of procurement.

7. Provide liaison for the OICC with other U.S. government agencies and the Republic of Vietnam concerning procurement and contract administration.

CONSTRUCTION DIVISION

MAJOR FUNCTIONS.

1. Administers and directs the construction inspection program; controls inspector job assignments, provides training and technical guidance to inspectors; develops policies and procedures for surveillance and reporting of the contractors performance and progress.

2. Provides construction-oriented engineering consultation services to the OICC field and staff offices; maintains liaison with contractors' central staff offices on actual and anticipated construction problems requiring resolution; participates as technical consultant on Contract Award Boards and Change Order Boards.

3. Coordinates reviews and approves/disapproves contractors' proposed project progress schedules, as appropriate; monitors the progress of construction at sites; reports on status of construction as required.

4. Supervises the staffing, administration and operation of Field Materials Testing Laboratories; provides technical consultation to the field forces and sponsors projects concerning characteristics and testing soils, concrete, asphalt and other materials; provides consulting services on soil erosion as requested.

5. Develops and administers a safety program for the OICC organization. Reviews and approves contractor's safety programs; performs field inspection of contractor's safety practices; provides construction and industrial safety codes to office and field forces; develops safety training programs and prepares special safety publications and guidelines as required.

6. Serves as the coordinating point for the OICC on construction matters, resolving or developing solutions to problems reported by the DIRCONS, ROICCs, and the Contractors which pertain to performance of work under a contract in force. Coordinates and correlates information and data with appropriate OICC components.

7. Provides site evaluation teams as required to perform pre-transfer inspection of completed construction and to effect orderly and proper transfer of facilities to the using agency.

8. Reviews overall contractor capability and performance; makes appropriate recommendations to OICC for Operations concerning progress, quality of construction and contractor performance evaluation, as required.

9. Prepares, published and maintains current, instructions, notices, or manuals pertinent to materials testing, construction engineering, supervision and inspection, or safety matters.

10. Provides a Board Member for Materials Review Board, Personnel Review Board, and Accident Investigation Board.

CONSTRUCTION MANAGEMENT BRANCH

MAJOR FUNCTIONS.

1. Serves as coordination point between the OICC and DIRCON, ROICC and contractor components on construction management matters.

2. Resolves and/or coordinates development of solutions to project problems reported by the OICC components, sponsor or contractors; coordinates actions resulting therefrom.

3. Reviews, evaluates, and recommends changes to or approval of construction schedules, payment requests and schedules of prices.

4. Assembles construction progress status information and makes reports as required.

5. Analyzes data to determine trends, identify potential problem areas, formulate predictions, and compare performance against target productivity for all construction sites.

6. Reviews general construction management procedures and makes recommendations for changes, corrective actions or improvements, as appropriate. Coordinates and correlates information and data with other OICC components; disseminates to all interested parties, as required.

7. Insures complete and final closeout of projects and contracts and insures timely turnover to sponsor or user.

8. Provides site evaluation teams and site/project closeout teams to facilitate the orderly transfer of construction projects from the CPAF contractor to designated carry-on Lump Sum contractor or other designated construction agencies.

9. Coordinates and controls Government Furnished Material and Equipment requirements and issue.

10. Reviews proposed construction programs to determine most practical method of construction, i.e., cost reimbursable, CPAF, Lump Sum, troop or other.

INSPECTION BRANCH

MAJOR FUNCTIONS.

1. Develops and administers construction inspection program; provides training, guidance, and instructions to field inspectors as required. Insures inspectors are technically equipped using proper instruction manuals and guidelines and are provided with copies of applicable OICC instructions and notices.

2. Supervises and controls use and distribution of all inspection personnel; initiates personnel actions; transfers and assigns inspectors to sites as qualifications and construction project needs may require.

3. Participates in pre-transfer and final inspection of completed facilities; coordinates processing of construction transfer document DD Form 1354; compiles and maintains official record file of all DD Form 1354's. Coordinates actions involving correction of construction deficiencies, as required.

4. Insures that all "as built" drawings, manufacturer's data, (catalogs, operation and maintenance manuals, etc.) are received, processed and distributed as required. Provides field personnel with necessary operating forms.

5. Develops, administers and monitors a safety program for the OICC organization. Reviews and acts on contractors safety program; performs field inspection of contractor operations and safety practices. Provides field training program, manuals, guides, codes and instructions to OICC and contractor field forces relating to all areas of safety including fire, electrical, mechanical, structural, earth work, pressure vessels, explosives and materials handling; prepares special instructions and guidelines as required. Receives and reports to higher authority circumstances surrounding fatal accidents; serves on the accident fact finding board; prepares and forwards quarterly accident and data reports to higher authority.

6. Maintains a Technical Library of publications pertinent to supervision and inspection of construction; provides reference material to ROICCs and other OICC components, as required.

MATERIALS TESTING BRANCH

MAJOR FUNCTIONS.

1. Supervises the staffing, administration, and operation of Field Materials Testing Laboratories.

2. Provides technical consultation to the field forces and sponsors concerning characteristics and testing of materials; makes recommendations concerning use or suitability of materials for specific projects.

3. Develops and recommends programs and procedures for preventive and corrective measures in the field of soil erosion; implements and monitors work, as required.

4. Develops methods, procedures and standards for conduct of investigations, testing, and evaluation of construction materials in laboratory and field operations; prepares, implements and monitors various instructions, manuals or guides pertaining thereto.

RESOURCES DIVISION

MAJOR FUNCTIONS.

1. Acts as Material consultant, coordinator and liaison with construction contractors, A&E firms and material suppliers.

2. Monitors the contractor's material and equipment program involving procurement, movement, etc.

3. Makes price and cost analyses of changes in contracts, including profit and overhead expense due to variances in amounts of contractor furnished material, storage, inventory control, and issuing practices for all material, supplies and non-expendable property and equipment.

4. Coordinates material procurement for, and transfer to, the various OICC customer activities.

5. Controls all surveys and disposal of materials and equipment.

6. Performs all control and acceptance tests of materials used in construction to assure compliance with plans and specifications.

7. Operates Soil Mechanics and Materials Testing Laboratories.

8. Provides technical guidance, engineering evaluations and consultant services on materials and materials problems to the OICC and to other naval activities who have research or development projects located in the area.

9. Coordinates and expedites ocean and air shipments of contractor procured supplies, equipment and other materials from CONUS and other foreign ports to point of usage.

10. Determines, established and provides priorities to shipping against and establishes the most expeditious, practical means of movement.

11. Provides liaison and coordination between the OICC and Equipment Management personnel of Contractors or other Military Agencies.

12. Reviews plans, specifications, shop scheduling and production control procedures for major repair and projects shops.

MATERIAL BRANCH

MAJOR FUNCTIONS.

1. Monitors the contractor's material and equipment management program involving movement, receipt, storage, inventory control, and issuing practices for all material, supplies, and non-expendable property and equipment for a designated site.

2. Control all surveys of material and disposition of releasable assets or excess materials by sales or other means.

3. Acts as Material Consultant, coordinator and liaison with construction contractors, A&E firms and material suppliers.

4. Coordinates material procurement for, and transfer to, the various OICC customer activities.

5. Operates Soil Mechanics and Materials Testing Laboratories.

TRANSPORTATION BRANCH

MAJOR FUNCTIONS.

1. Coordinates and expedites ocean and air shipments of contractor procured supplies, equipment and other materials from CONUS and other foreign ports to point of usage.

2. Establishes close working relationship with agencies and offices which may be involved to assure most expeditious, practical means employed in movement.

3. Works with the American Embassy in clearing through Customs Department all OICC shipments arriving via air and sea.

4. Coordinates with the contractor in maintaining status of the shipping and handling of materials to the contractor's warehousing areas, and from these areas to the job sites.

5. Reviews requirements for air shipments.agent.

6. Determines, establishes and provided priorities to shipping

EQUIPMENT BRANCH

MAJOR FUNCTIONS.

1. Formulates, reviews and manages the OICC Equipment Management Program.

2. Administers, assigns and supervises Equipment Office staff personnel and Field Specialists.

3. Provides liaison and coordination between the OICC and Equipment Management personnel of Contractors or other Military Agencies.

4. Establishes and monitors Award Fee Objectives to encourage contractor management of equipment maintenance and equipment utilization.

5. Sets standards for monitoring an overall Equipment Plan, Major Repair Program, Component Overhaul Program and Preventive Maintenance Program.

6. Initiates and improves ADP applications to monitor equipment utilization and repair.

7. Reviews plans, specifications, shop scheduling and production control procedures for major repair and projects shops.

8. Reviews equipment inventory, excess and survey procedures.

9. Monitors contractor staffing for equipment operation and maintenance.

10. Reviews and makes recommendations on contractor requests for purchase or rental of equipment.

GENERAL NOTE

The position descriptions enclosed provide for a broad range of assignments to individuals within the established organizational structure. Grade levels listed will be affected by specific assignments and the specific environment in which the work is performed. Presence of supervisory personnel, special problems induced because of the locale in which work is performed and the volume of activity as represented by the size of the construction program are factors which must be considered in arriving at grade levels to which positions should be assigned. These factors must be weighed in selecting appropriate grade levels for positions which are listed with two or more grades. At the same time these coarse descriptions should be used as a base for developing accurate depictions of what is required, or being done, in the position.

Certain positions such as painter, automotive mechanic and related artisan and labor positions will be established in accordance with local requirements for obtaining services of indigenous personnel

APPENDIX H

CONTENTS

Title	Work Area	Grade	Page
Supervisory Accountant	Comptroller	GS-510-14	H-7
Supervisory Accountant	CPAF Accounting Review	GS-510-13	H-11
Supervisory Accountant	Accounting Branch	GS-510-12,11	H-13
Accountant	CPAF Accounting Review	GS-510-12,11	H-15
Accountant	CPAF Accounting Review	GS-510-12,11	H-16
Accountant	CPAF Accounting Review	GS-510-12,11	H-17
Supervisory Accounting Technician	CPAF Accounting Review	GS-525-9	H-19
Accounting Technician	CPAF Accounting Review	GS-301-9,7	H-21
Accounting Technician	Accounting Branch	GS-525-9,7	H-22
Accounting Technician	Accounting Branch	GS-525-9,7	H-23
Administration Services Asst.	Office Services	GS-341-9	H-24
Supervisory Architect	Architectural Branch	GS-808-13	H-26
Architect	Specifications Branch	GS-808-12	H-28
Architect	Architectural Branch	GS-808-12	H-31
Architect	Architectural Branch	GS-808-11	H-33
Attorney-Advisor, General	Counsel	GS-905-13	H-35
Budget Office	Budget Branch	GS-560-13,12	H-37
Budget Analyst	Budget Branch	GS-560-11,9	H-40
Budget Technician	Budget Branch	GS-560-7,5	H-42
Supervisory Civil Engineer	Structural Branch	GS-810-13	H-44
Supervisory Civil Engineer	Construction Branch	GS-810-13	H-46
Supervisory Civil Engineer	Civil Branch	GS-810-13	H-48
Civil Engineer	Structural Branch	GS-810-12	H-50
Supervisory Civil Engineer	Construction Division	GS-810-12	H-52
Civil Engineer	Civil Branch	GS-810-12	H-54
Civil Engineer	Structural Branch	GS-810-11	H-56
Civil Engineer	Civil Branch	GS-810-11	H-58
Civil Engineer	Specifications Branch	GS-810-11	H-60
Clerk	Material Branch	GS-301-5,4	H-62
Clerk-Stenographer	General	GS-312-4	H-64
Clerk-Typist	General	GS-322-3	H-65
Supervisory Computer Specialist	Management Information Systems Division	GS-334-14,13	H-66
Computer Specialist	Automatic Data Processing Branch	GS-334-12,11	H-68
Computer Programmer	Automatic Data Processing Branch	GS-334-7	H-70
Computer Technician	Automatic Data Processing Branch	GS-335-7	H-72
Computer Technician	Automatic Data Processing Branch	GS-334-7,5	H-74
Computer Aid	Automatic Data Processing Branch	GS-335-7,5	H-77

Title	Work Area	Grade	Page
Computer Aid	Automatic Data Processing Branch	GS-335-4	H-78
Supply Contract Administrator	Contracts Division	GS-1102-14,13	H-79
Supervisory Contract Specialist	Contracts Division	GS-1102-13	H-82
Contract Specialist	Contracts Division	GS-1102-12	H-84
Contract Specialist	Contracts Division	GS-1102-12,11	H-86
Contract Specialist	Contracts Division	GS-1102-9	H-88
Construction Representative	Construction Division	GS-1640-11	H-90
Construction Inspector	Construction Division	GS-809-9	H-91
Construction Inspector	Construction Division	GS-809-7	H-92
Editorial Assistant	Public Affairs	GS-1087-7	H-93
Supervisory Electrical Engineer	Electrical Branch	GS-850-13	H-95
Electrical Engineer	Electrical Branch	GS-850-12	H-97
Electrical Engineer	Electrical Branch	GS-850-11	H-99
Electrical Engineer	Estimates	GS-850-11	H-101
Engineering Technician	Materials	GS-802-11,9	H-103
Equipment Specialist (General)	Equipment Branch	GS-1670-12	H-105
Equipment Specialist (Automotive)	Equipment Branch	GS-1670-9	H-107
Equipment Specialist (Automotive)	Equipment Branch	GS-1670-11,9	H-110
File Clerk	Central Files	GS-305-4	H-112
Fire Prevention Engineer	Fire Prevention Engineering Branch	GS-804-13,12	H-115
General Engineer Supervisory	Design Director	GS-801-14	H-117
General Engineer	Asst. for Design Management	GS-801-13	H-119
General Engineer	Program Management	GS-801-12	H-121
General Engineer	Program Management	GS-801-12	H-123
General Engineer	Program Management	GS-801-12,11	H-125
General Engineer	Program Management	GS-801-12	H-127
General Engineer	Asst. for Design Management	GS-801-12	H-129
General Engineer	Value Engineering	GS-801-12	H-132
Supervisory General Engineering	Specifications/ Estimates	GS-801-13	H-135
General Engineering	Specifications/ Estimates	GS-801-12	H-137
General Engineering	Specifications	GS-801-12,11	H-139
General Engineering	Estimates	GS-801-12,11	H-142
Guard Supervisor	Security	GS-085-9,7	H-145
Housing Project Manager	Housing Section	GS-1173-9,7	H-147
Historian		GS-170-12,11	H-150
Supervisory Inventory Management Specialist	Material Branch	GS -13,12	H-152
Labor Relations Specialist	Contract or Labor Relations	GS-246-13,12	H-154

Title	Work Area	Grade	Page
Management Technician	Directives Forms	GS-344-9,7	H-156
Materials Engineer	Materials Testing	GS-806-12	H-158
Supervisory Mechanical Engineer	Mechanical Engineer Branch	GS-830-13	H-160
Mechanical Engineer	Mechanical Engineer Branch	GS-830-12	H-162
Mechanical Engineer	Estimates	GS-830-12,11	H-164
Mechanical Engineer	Mechanical Branch	GS-830-11	H-166
Motor Vehicle Dispatcher	Transportation	GS-2151-4	H-168
Office Services Manager	Administrative Service	GS-342-9	H-169
Personnel Offices		GS-201-13,12	H-173
Programs Analyst	Program Management	GS-345-9,7	H-175
Public Information Offices	Public Affairs Office	GS-1081-12,11	H-177
Security Officer	Security	GS-085-9,11	H-179
Supervisory Supply Management Office	Material Branch	GS-2003-13,12	H-181
Supervisory General Supply Office	Material Branch	GS-2003-11	H-183
Supply Clerk	Material Branch	GS-2040-5	H-185
Traffic Management Specialist	Transportation Office	GS- -12,11	H-187
Travel Clerk (Typing)	Communications and Classified Files	GS-2132-5	H-189
Visual Information Specialist	Management Information Center	GS-1084-9	H-191

Supervisory Accountant
GS-510-14

I. INTRODUCTION

This position is established to provide comptroller-type functions for the OICC organization which will be primarily concerned as the construction agency for all the construction.

The administration and construction operations under the OICC will necessitate highly diversified and complex field organizations to administer the various phases of the work under a number of lump sum A & E type contracts and a major cost-plus-a-fixed-fee type construction contract.

The incumbent will determine procedural and reporting requirements and develop and install systems and controls, not only for a Cost-Plus-A-Fixed-Fee Contract, but for other contracts, handle and account for foreign currencies; establish methods for dealing with foreign contractors and other Governments; and at the same time fulfill financial requirements and related procedures imposed by the Congress, the Department of Defense, the General Accounting Office, the Office of the Navy Comptroller and other regulating bodies and agencies. The functions of this position are largely in the field of commercial accounting, particularly construction and cost accounting.

II. MAJOR DUTIES AND RESPONSIBILITIES

The incumbent plans, develops, organizes, coordinates, directs, and insures accomplishment of all financial management and administrative services required by the OICC off ice. He is responsible for directing and advising all accountants and other civilians performing related work in the Comptroller organization of the OICC office and the various ROICC suboffices.

As Comptroller for the OICC and the various ROICC offices, the incumbent has responsibility for insuring that accounting, financial review, and budgetary functions required for the entire organization are adequate, timely and in conformance with regulatory and procedural controls established by the Navy and other various services for which construction work is being performed. Insures that agreements between the United States and the Republic of Vietnam, as they pertain to fiscal and administrative matters, are observed. Provides advice and determinations concerning fiscal matters to the OICC, members of his staff and the ROICC organizations. Represents the OICC at meetings and discussions concerning fiscal matter.

The incumbent will be the OICC representative to the CPFF contractor on all Comptroller type functions.

accountants and the Officer in Charge of Construction for CPFF contracts, on accounting and procedural problems relating to financial, accounting or administrative control, in order that Government funds are properly accounted for and amply safeguarded. The incumbent is the designated funds administrator of the OICC office.

Make and supervise personally, periodic inspections of field offices, including Contractor's construction offices and the ROICC offices; discuss and evaluate methods and procedures for expediting the work, safeguarding the Government's interests, outlining changes to facilitate the handling of the workload and increase the efficiency of the organizations; and settle administratively major issues arising as a result of the field inspection trips.

Interprets. and applies the provisions of a number of GAO decisions to a variety of conditions pertaining to CPFF for the guidance of OICC's and individual contractors.

Establishes procedures for the purchase, accounting, use and control of local foreign currencies, and exercises continuing supervision over this operation. Is responsible for establishing and administering a payroll and disbursing function to permit payment of personnel, travel costs, invoices for material and equipment, and contractors reimbursements. Payment responsibilities will include procurement and expenditure of local foreign currency as well as dollar reimbursements.

Advise and assist the Contractor and the OICC in closing of CPFF contracts and preparation of Completion Reports. Approve variations to the procedures established for the preparation of Completion Reports, necessary because of certain contractual requirements or diversified operations; approve the Completion Reports and the Final Public Voucher prior to payment, and review the balancing of the cost accounts to the control accounts. In the event of any contract termination, instruct the OICC staff, the contractor and sub-contractor of the new procedures to be followed in closing terminated contracts, the new forms required to be used by ASPR and the additional authority the OICC has under a terminated contract.

III. CONTROLS OVER THE POSITION

Supervised by the OICC for Program and Financial Management. Supervision is administrative in nature in as much as incumbent is considered expert in the field of financial accounting and program management analysis. Problems involving policy matters or where host country-U.S. Forces relationship are involved are discussed with supervisors prior to finalization of action.

The Cost-Plus-A-Fixed-Fee Manual provides that "If the Contractor's accounting system fulfills the requirements of the manual, as approved by the OICC, it will not be necessary for him to change his accounting procedures" Also, it states that "Since the expense of maintaining accounting records under the contract must be kept to a minimum, records or procedures shall not be instituted unless they are necessary to accomplish a specific Governmental objective or purpose" and "The General Ledger shall contain the minimum number of accounts considered necessary to reflect the financial position of the Contractor and the Navy with regard to the Contract". These and other accounting requirements necessitate an accurate appraisal of the adequacy of the Contractor's accounting systems in fulfilling CPFF requirements. Also, it is necessary to outline procedures, where accounting modifications are indicated, that will be responsive to the prescribed accounting systems of various agencies for whom construction is being performed, charts of accounts, the minimum number of general ledger accounts, data to be cost coded, the make-up of the "Permanent Account" line items and the job classification of the construction cost accounts. To the approved Contractor's accounting system are added the specifics of Government requirements, i.e.; inclusion of accounting and reporting peculiar to Governmental operations, not normally required by a contractor operation. Therefore, the incumbent must have broad experience and knowledge of construction contractors accounting methods as well as Governmental accounting systems, so as to permit the most efficient and flexible method of accounting for the various construction projects involved. The incumbent must establish close liaison with the Defense Contract Audit Agency Auditors and insure a high degree of conformity and consistency in consonance with existing CPFF accounting procedures.

Plans, initiates, and develops reporting requirements under CPFF Contracts; reviews the reports for correctness and timeliness and initiates and develops revisions to the accounting procedures to meet new requirements and regulations. Prescribes methods for the calculation of equipment rental rates; equipment amortization rates, and demobilization factors.

Directs the establishment of criteria for time and material checking functions to performed by Navy personnel in regard to contractor operations. This involves validation of personnel employed by the Contractor, performance of work, rates of pay, and receipt and use of materials. Reports on these factors are used as a basis of determining contractor's reimbursements, as well as for insuring compliance with applicable employment and labor laws and material control regulations.

Advise and guide, as occasions demand, Contractor's

Representative of policy and procedural guidance and control are: Manual for Administration of Cost-Plus-A-Fixed-Fee (CPFF) Contracts, NavDocks P-71, NavCompt Manuals, notices and instructions, BUDOCKS Instructions, Armed Services Procurement Regulations, General Accounting Office requirements, Government Travel Regulations and others. All of these require interpretation and contribute to the complexity of work by interpretation of one in terms of the others.

IV. QUALIFICATIONS REQUIRED

This position requires extensive background, experience, and substantial knowledge, and ability in the financial management area, including the functions of budgeting, accounting, financial reporting, and establishment and administration of financial policies, procedures, and evaluation. A thorough knowledge of the principles of CPFF contracting is also required.

Supervisory Accountant
GS-510-13

I INTRODUCTION

This position is established in the CFAF Accounting Review Branch, OICC, to provide a Resident Navy Accountant for a CPFF Contract operation. The worksite will be at the location of the contractor's principal operational site.

II MAJOR DUTIES AND RESPONSIBILITIES

a. As Resident Navy Accountant the incumbent will be responsible to insure the accuracy and propriety of costs claimed by a CFAF contractor engaged in carrying out a complex construction program of at least 100,000,000 dollar value and involving the use of 8-10,000 workers at 8-12 major location and as many as 50 sites. Sets up procedures, assigns personnel1 reviews cost, financial, operational, labor and material reports and spot checks operations as necessary to carry out this responsibility.

b. Plans, coordinates, directs and administers work of a staff of 15-25 subordinates including accountants, technicians, and clerical personnel engaged in developing costs and statistics, reviewing and analyzing accounts, inspecting and recording operations, labor, material and equipment usage, preparing reports and providing ancillary clerical services. Organizes office; plans and assigns work; explains policies and procedures; gives general and technical guidance; assists in the selection of personnel; provides training and instruction, as required; and evaluates performance and recommends commendations and disciplinary action.

c. Resolves all problems pertaining to contract cost records, reports, etc. with the contractor's personnel. Interprets regulations, policies, contract provision, and the like and makes authoritative determinations of applicability to specific cases. Keeps the Director, CFAF Accounting Division informed on current costs and conditions.

d. Conducts special studies; makes reviews of cost records; checks the distribution of contractors overhead, temporary and clearing accounts to insure that records maintained by the contractor are current, complete and accrued by proper cost codes. provides liaison with the DCAA staff on contract audit matters.

e. performs other related duties, as required.

III. CONTROLS OVER THE POSITION

This position works under the general supervision of the Director, Financial Management Division who explains policies

provides general and technical assistance as required and evaluates work in terms of adequacy and adherence to established policy and regulation. Because of the distance between the work location of this position and the supervisor day-to-day work must be planned and carried out independently.

IV QUALIFICATION REQUIREMENTS

The work of this position requires that the incumbent have had government accounting experience and experience in construction cost accounting. CFAF accounting experience preferred.

Supervisory Accountant
GS-5 10-12/11

I. INTRODUCTION

This position is located in the Financial Management Division, Accounting Branch Officer in Charge of Construction. The incumbent will design, install and maintain accounting systems and as directed maintains liaison with contractors.

II. DUTIES AND RESPONSIBILITIES

A. Designs, installs, maintains and directs the operation of accounting systems for control of funds consisting of Dollars and local currency.

B. Directs the maintenance of books of accounts and subsidiary ledgers and the preparation of reports and financial statements by subordinate employees. Reviews and analyzes such statements and reports.

C. Maintains liaison with line managers to discuss adequacy of financial statements and to review problem areas involving status of accounts versus other management records. Similarly at such conferences participates in discussions in establishment of accounting procedures to meet operating requirement or to reflect special accounting information on a one shot basis.

D. Meets with officials from the other government sponsor Accounting and Financial Offices, Area Auditors, financial activities' representatives, and local contractor organizations to establish and maintain payment procedures, method for recording and disbursing funds on multiple funding projects, to explain or provide information on status of accounts, and accounting procedures and the like.

E. Assists in the review of contractors accounting system by analyzing specific sections or functions such as overhead analysis, maintenance of books of original entries, methods of costing, etc., to advise on revisions thereto or required improvement. In such instances recommendations and findings are submitted to supervisor responsible for entire projects or major segments of project.

III. SUPERVISION OF OTHERS

Supervises approximately nine employees. Supervision is general in nature except where new methods, systems, and procedures are encountered. Instructions given are either in writing or orally depending on subject matter.

IV. CONTROL OVER THE JOB

Supervision is received from the Accounting Branch Manager, who will make assignments, review the work accomplished and provide policy guidance. Guidelines will include NAVCOMPT Manual, Bureau Instructions and Directives, and financial management policies established by the OICC and other higher echelons.

V. QUALIFICATION REQUIREMENTS OF THE POSITION

Incumbent of this position must have a thorough knowledge of accounting methods and systems.

Accountant
GS-510-12/1l

I. INTRODUCTION

As accountant in the CPAF Accounting Review Branch, the incumbent is responsible for control, detailed analysis and verification of reports and information emanating in the Branch.

II. MAJOR DUTIES AND RESPONSIBILITIES

a. Acts as lead accountant in maintenance of special account categories relating to OICC construction activities.

b. Audits reports to sponsor groups.

c. Records and verifies financial transactions of the OICC.

d. Responds to requests for information and special reports from sponsor groups.

e. Provides technical advice and assistance to the manager on accounting matters, informing him of major program status and problems.

f. Coordinates installation of accounting systems and requirements to relate to other systems such as APP (Automated Data Processing) for reporting of transaction to sponsors or NAVFAC.

III. CONTROLS OVER THE POSITION

The position is given general supervision by the Branch Manager, who provides general guidance, policy and regulations to be followed.

IV. QUALIFICATION REQUIREMENTS OF THE WORK

a. Background in accounting, with a familiarity with automated data processing techniques.

b. Ability to work effectively at high efficiency under heavy workload pressure.

c. Accounting experience or the equivalent in accordance with x-118 with a minimum of one year experience in a supervisory capacity responsible for accounting installations and reporting, preferably in Military Construction activities.

Accountant
GS-510-12/11

I. INTRODUCTION

This position is established in the CPAF Accounting Review Branch of the Financial Management Division to provide to the specialist in the review and analysis of the contractors accounts.

II. MAJOR DUTIES AND RESPONSIBILITIES

a. Serves as assistant to the Branch Manage; assisting in the development of office organization, assignment of work, training employees and evaluating effectiveness of a staff. Performs specific tasks as assigned and is kept informed of all phases of the operation. Provides technical guidance to subordinates.

b. Conducts studies and investigations of problems arising in relation to contract cost records, reports, contract interpretations, etc. Studies records and reports; discusses problems with government and contractor personnel; interprets regulations and contract provisions; and develops recommendations for procedures and actions to resolve difficulties.

c. Reviews contractors camp operation cost reports. Insures that all cash collections are reported and, when due, credited to the account of the Navy. Analyzes camp operating costs in relation to number of employees receiving services (unit cost study). Reviews the financial. operating statements of any personnel support facilities in operation.

d. Analyzes reports and statements and makes special studies, as requested, to determine efficiency of operation, rate of construction versus rate of expenditure, trends, etc. Prepares reports of such analyses and studies.

e. Performs other related duties, as required.

III. CONTROLS OVER THE POSITION

This position is supervised by the Manager, CPAF Accounting Review Branch who assigns work, explains objectives, acts as consultant on problems and reviews work for adequacy. Incumbent plans and carries out assigned tasks independently.

IV. QUALIFICATION REQUIREMENTS

The work of this position requires both education and experience in accounting and bookkeeping. principles and methods and a familiarity with construction cost accounting and Navy accounting procedures and requirements.

Accountant
GS-510-12/11

I. INTRODUCTION

This position is located in the CPAF Accounting Review Branch, Financial Management Division. As Accountant, provides professional expertise in the performance of certain functions of this Branch.

II. MAJOR DUTIES AND RESPONSIBILITIES

The duties of this position are complex and require a high degree of professional accounting ability. Primary duties are as follows:

a. Implements accounting system and procedures for the various construction, maintenance, and operations, administrative and other types of funds received by the Director.

b. Analyzes accounting reports to determine trends and workload, to detect areas where most emphasis should be directed to various phases of the work or rescheduling of certain operations and to develop statistical data and financial information for use in preparation of justification of budget estimates, etc.

c. Attends pre-construction conferences with contractors and ROICC personnel to provide instructions on accounting procedures including submission of invoices in payment of contracts. Acts as advisor to activities within the various Naval Districts in the accounting and reporting of maintenance and operational funds issued by the Director. Serves as a member of the team reviewing ROICC contract procedures and also provides the instructions for handling of targets and submission of documents. Advises ROICC personnel concerning the procurement and supply services which they can obtain from the various stations where they are physically located and submission of labor distribution and time cards, travel and other related items. Detects procedural errors and/or areas where procedural changes are required in order that the system concerned may be kept current and areas of difficulty may be eliminated as quickly as possible.

d. Audits and reconciles accounting records under the cognizance of the Finance and Accounting Branch including procedures and policies.

III. CONTROLS OVER THE POSITION

The incumbent reports directly to the Manager, CPAF Accounting Review Branch, who exercises general supervision. Details are accomplished without detailed instructions and primarily on own initiative. Assistance is requested if required in establishing controls on funds, determining legality of use of funds and scope of special projects, and in interpretation of Appropriation and Authorization Acts. Techniques, methods and controls are established generally on own initiative to carry out procedures and instructions.

IV. QUALIFICATION REQUIREMENTS FOR THE WORK

Requires the services of a professional accountant who has a thorough working knowledge and understanding of NAVFAC, Navy and governmental accounting practices and procedures to perform the duties outlined above.

Supervisory Accounting Technician
GS-525-9

I. NATURE AND PURPOSE OF WORK

Supervises operation and maintenance of accounting procedures in the Financial Management Division, CPAF Accounting Review Branch.

II. MAJOR DUTIES

1. Supervises in the maintenance of separate MCON records for approximately 10 appropriations allocated to the OICC.

2. Operates system by setting up or revising as necessary books of accounts and subsidiary ledgers in accordance with established plans and systems devised by supervisor.

3. Enters or directs the entry into basic records accounting data relative to initial funds of various programs and upon receipt of expenditures and receipt documents. Determines the nature of transaction, accounts involved and indicates nature of entry to be made by lower graded non-professional employees.

4. Periodically reviews work performed by lower graded personnel in connection with recording of accounting transactions to various books of accounts and accounting records. Reconciles deficiencies requiring the tracing of a particular action throughout the accounting system.

5. The incumbent is responsible for the preparation and submission of monthly status reports. The reports provide information on funds and cost to the activity and are utilized by DirpacDocks and the Bureau for reporting to higher authority.

III. SUPERVISION OVER OTHERS

Incumbent will exercise direct supervision over lower graded employees and will train and instruct these personnel in methods utilized in the establishment of fiscal and cost accounting procedures.

IV. CONTROLS OVER POSITION

Incumbent's immediate supervisor is the Head of the Accounting Section. Supervision will consist of general instructions in accounting and reporting requirements. Supervisor will clarify regulations and instructions received from various Bureaus, Government organizations and higher levels. Instructions will be given in general terms and in-

cumbent will be required to make routine changes in procedure from these instructions.

V. QUALIFICATION OF REQUIREMENTS

Incumbent is required to have a statistical and/or fiscal background and be able to interpret instructions provided by the NAVCOMPT Manual and NAVDOCKS P-1570. These guides form the basis for determining legality of expenditures and methods of posting utilized by the MCON system. Incumbent must have a working knowledge of Navy and Air-Force accounting procedures

Accounting Technician
GS-301-9/7

I. INTRODUCTION

This position is established in the CPAF Accounting Review Branch, to provide supervision and coordination of time and material checking on CPAF contracts.

II. MAJOR DUTIES AND RESPONSIBILITIES

a. Plans and organizes the time and material checking operation for CPAF contracts. Develops procedures1 writes instructions and insures that methods used on the different contracts are consistent. Evaluates effectiveness and revises procedures and instructions as necessary. Directs time and material checking through subordinate supervisors in the field. Assists these supervisors in resolving problems, dealing with employees, etc. Total number of employees engaged in time and material checking may be 10 or more.

b. Receives and correlates all field reports for use in auditing the contractor's cost claims. Takes appropriate action to resolve any discrepancies or inconsistencies noted. Insures that proper project and cost code are used. Reports all contractor's deficiencies and irregularities noted in the field reports.

c. Insures that all ASPR requirements regarding control of government property in the hands of contractors are met. Through the field checkers insures that property is properly identified, secured and accounted for in the field. Investigates and reports on losses, damages, reported misusage or unreasonable consumption. Balances and reconciles Property Record Cards with accounting records.

d. Performs other related duties, as required.

III. CONTROLS OVER THE POSITION

This position is under the general supervision of the Branch Manager. The supervisor provides general guidance and instruction, acts as consultant on problems encountered, and reviews work for general adequacy and adherence to established procedures. The incumbent is expected to carry out day-to-day work on own initiative in accordance with established policy and directives.

Accounting Technician
GS-525-9/7

I. INTRODUCTION

This position is in the Financial Management Division. This branch is responsible for making all payment and collection transactions, making reconciliations, and reports.

II. DUTIES AND RESPONSIBILITIES

1. Supervises, and participates in, reconciliation of accounting transactions for prior years. Direct subordinates are one or two regular employees and other employees that may be assigned on a part-time basis.

2. Performs analysis and accumulation of information and prepares the following periodic reports; Schedule of Net Disbursements and Accounts Payable and Payments for Funded Projects (Contract NBy and Overhead Applied).

3. Serves as assistant to the Branch Chief by performing projects as necessary and by acting as Branch Chief in his absence.

III. CONTROLS OVER THE POSITION

Incumbent is expected to perform all regular duties without direct supervision and to assume tasks without specific assignment. Reports and subject to review but are expected to be correct without detailed checking.

IV. QUALIFICATION REQUIREMENTS OF THE WORK

Incumbent must be qualified in the mechanics of appropriation accounting and reporting, able to assimilate Voluminous data, understand the significance of desired results, and perform effectively under constant pressure of deadlines.

Accounting Technician
GS-525-9/7

I. INTRODUCTION

This position is in the Accounting Branch, Financial Management Division, which performs banker functions for all Army, Navy and Air Force military construction funds allocated to OICC and administrator functions for all other funds made available by military services and other agencies of U.S. Government. This is one of a small number of positions in the Branch, which is responsible for Army, Navy, Air Force and Non-DOD accounts.

II. MAJOR DUTIES AND RESPONSIBILITIES

Incumbent is responsible for review and verification of MILCON accounting statements for OICC Administrative Funds and assuring accounting procedures are being complied with. Reconciles expenditure documents to Listing of Expenditures/Collections issued by the various Navy Finance Centers. Prepares Status of Fund Authorization monthly, reconciling with the MILCON Accounting Statement. Prepares special reports, and reconciles recorded payments with actual reported disbursements.

III. CONTROLS OVER THE POSITION

Works under the direct supervision of the Branch Chief or Senior Operating Accountant. Incumbent works independently, with minimum review of final work. Published guides include NAVCOMPT Manual; MCON Financial Management Handbook, NAVEXOS P-1570, P-68, NAVFACENGCOM and PACNAVFACENGCOM instructions and policy statements; and Army and Air Force Regulations.

IV. QUALIFICATION REQUIREMENTS OF THE WORK

Five years of experience required; 3 years of general experience which provided knowledges, abilities and skills in accounting.

Administrative Services Assistant
GS-341-9

I. INTRODUCTION

This position is located in the Services Office, Assistant Officer-in-Charge of Construction for Administration, Officer-in-Charge of Construction, Southeast Asia. The incumbent is responsible for the overall planning, directing, reviewing and coordinating the following Officer-in-Charge of Construction, Southeast Asia functions: (1) Program of Records and Correspondence Management, (2) Central Files and Distribution Center.

II. MAJOR DUTIES AND RESPONSIBILITIES

1. Incumbent makes studies and recommendations to the Assistant Officer-in-Charge of Construction for Administration for improvement in the operations of the Services Office. Conducts a program of correspondence management and records maintenance, including transfer and disposal for the entire activity. In addition to closing out subject files, the incumbent is responsible for the closing out of all contract files upon the completion of a contract. The completed contract files are separated from active and screened for duplication of paperwork. Each contract paid in local currency has to be converted into U.S. dollars and shipped to the Federal Records Center according to the amount of the contract. This is done in accordance with SECNAVINST P5212.5B.

2. Responsible for the Reports Analysis and Reports Control Program, Forms Control Program and for administering the Directives System. All incoming directives are reviewed and analyzed by incumbent for Recurring Reports Required and prepared by OICC/SEA; a report control file is set up for each report and a daily tickler control program is carried out, notifying the office or person by whom the report is to be prepared. In administering the Forms Management Program, incumbent analyzes, on a continuing basis, all forms initiated or used by this activity; controls the creation of new forms, and recommends elimination or revision of existing forms; establishes and maintains a case file for each approved local form. The incumbent administers a continuous review of OICC/ SEA directive, including letters, instructions and notices, and refers them to the pertinent office for revision and cancellation as necessary to keep them current.

3. Incumbent supervises the following units within the Services Office, performing functions as indicated:

a. Central Files and Distribution Center, through which all unclassified incoming and outgoing correspondence passes. The incoming desk receives, date stamps, and routes all incoming mail to the various offices and codes for information and/or action; keeps receipt control of action correspondence. The outgoing correspondence is serialized, dated, and placed in properly prepared envelopes for mailing, or distribution. The distribution of all OICC/SEA Instructions and Notices are made. Central Files, which contain all administrative outgoing and incoming official correspondence and messages, OICC/SEA Instructions and Notices, DOICC/SEA Instructions, COMUSMACTHAI Instructions, miscellaneous Manuals and employees up-to-date locator maps. These files are kept current and in accordance with the U.S. Navy Subject Classification and Filing System.

b. Mail Room, which is responsible for the receipt and dispatch via the APO, American Embassy, and JUSMAG of all personal and official mail, delivery of official correspondence to various American and local agencies in Bangkok, and for the maintenance of index cards on all OICC/SEA military and civilian employees, and A&E Contractors with APO privileges. The mail room handles U.S., APO, International, and local Messenger mail, including registered, insured and certified mail.

c. Reception Room, where one clerk typist serves as the switchboard operator and receptionist for OICC/SEA. She types final formats of letters, endorsements, requisitions and stencils. Receives OICC/SEA visitors and places telephone calls.

d. Teletyping operations for transmission and receipt of information on established communications network.

III. CONTROLS OVER POSITION

Incumbent works under the direct supervision of the Administrative Services Officer in Charge of Construction for Administration. Incumbent works independently and assignments are in terms of objectives to be accomplished with oral and written instructions to supplement basic assignments. Performance is evaluated on the basis of accomplishments and efficient operation of the office.

IV. QUALIFICATION REQUIREMENTS OF THE WORK

Incumbent must have a thorough working knowledge of applicable Naval and local procedures, laws and regulations pertaining to correspondence, and records managements. Incumbent must have a working knowledge of procedures which pertain to mail matters, preparation and dispatch of messages, correspondence and instructions. Incumbent must have the ability to cope with varying situations as they arise in the routine of office work.

Architect Supervisor,
GS-808-13

I. INTRODUCTION

The incumbent of this position serves as the Manager, Architectural Branch, in the Design Division of the OICC, _____.

II. MAJOR DUTIES AND RESPONSIBILITIES

A. As the OICC engineer responsible for architectural design matters, the incumbent personally, or through subordinates, provides assistance and guidance to A&Es, the DOICC for Operations, the OICC, other staff members, and personnel of participating offices. Projects will involve such activities as developmental and feasibility studies, site surveys and preliminary planning, other general engineering investigations, preparation of preliminary and final plans and specifications, and continuous coordination with other design and construction engineers concerned with other aspects of installations. Because of the requirement demands, site location and environmental conditions, the work is complicated by many new and unique features.

B. Responsible for the review and evaluation of architectural aspects of A&E feasibility studies, preliminary engineering reports, and final plans and specifications. Responsible for determining compliance with the sponsor and NAVFAC criteria, and recommends approval, change or modification as required. Coordinates work with that performed by other OICC staff engineers, and together with these or ROICC personnel, insures conformance with overall plans and with requirements or recommendations of other offices.

C. Makes field trips, independently, or as a member of a team, to construction sites, associated organizations or other locations to secure or provide information and assistance in regard to functions previously indicated. During site visits, investigates architectural problems, and furnishes guidance and direction for their solution. Performs technical surveillance of construction phases pertaining to architectural features; insures that architectural systems and components comply with construction contract requirements. Initiates action for changes to plans and specifications required by on-site conditions and develops engineering data to support such changes.

D. Responsible for the preparation and completion of final designs for architectural features of projects to be used by the contractor for the construction of facilities. Supervises professional engineers, architects, technicians and/or draftsmen in the performance of the above duties.

III. CONTROLS OVER THE POSITION

The incumbent of this position reports to the Director of the Design Division who provides general guidance regarding project objectives, priorities and OICC/DOICC decisions. Actual operations and details of the work performed are not normally reviewed and little technical direction is provided. The incumbent is expected to plan and accomplish the work of his Branch independently and is held responsible for technical results.

Architect

GS-808-12

I. INTRODUCTION

This position is located in the Specifications Branch, Design Division. The Specifications Branch is responsible for the planning, development, and review of all specifications and estimates for facilities throughout the geographic area. The incumbent independently handles complex specifications for architectural and general building construction components of all projects within the construction program and serves as an authority on architectural specifications and materials.

II. MAJOR DUTIES AND RESPONSIBILITIES

A. Specifications

General. The responsibilities and authority of this position apply to both projects designed by the OICC and those designed by Architect Engineer firms for the Navy. The incumbent defines the technical criteria, controls and restrictions by which the A&E firms prepare such specifications for the Navy, and prepares guide specifications both for use within the office and which the A&E firms are required to utilize for work to which they apply. He determines the materials, processes, and techniques to be used, and the technical requirements governing acceptability of products1 standards of quality, installation methods, standards of workmanship and the many other requirements necessary to ensure that the finished facilities will be adequate for their purpose. He must make sure that all specifications in his field are free from restrictions that eliminate qualified products, materials or processes, thereby restricting competitive bidding, unless such restrictions are absolutely necessary. He must defend all specifications for which he is responsible against protests of unfairness by manufacturers of disqualified products. Many of the projects are for facilities to serve the latest technological developments in weapons, ordnance, communications, fuels, aircraft and vessels of the Navy or for research. He coordinates his work with the Special Assistant for Fire Protection and Safety and other components of the OICC, reconciles the advice received with project requirements and decides its application. He may represent the OICC in conferences with client activities, architect engineers, and both outside Governmental agencies and private firms relative to work within his responsibilities.

Specifications for Projects Designed by OICC. The incumbent is assigned the responsibility for development of the specifications for all major architectural engineering phases of the projects and where the project is basically of an architectural nature, he is assigned the specifications for the entire project and the coordination of all its phases

and prosecution to its final completion. At the inception of such projects, he participates in preliminary discussions with the client activity toward determining their requirements and details of the function of the project. When the project is received for specifications, the incumbent is responsible for providing the specifications for all aspects of the project within his field.

Review of Work Performed by Private A&E Firms for the OICC. The incumbent provides the necessary briefing, advice and decisions required at beginning of the work and as problems develop, and represents the activity in conferences with them involving work within his responsibility. He reviews the completed specifications in draft form and requires revisions and resubmittals as necessary until the finished work is acceptable to him. He coordinates or insures the coordination by the A&E of the specifications with the client activity in the same manner outlined in the above paragraph for the work designed by the OICC. Statements concerning projects designed by the EFD, regarding the specialized work apply to A&E-prepared specifications to almost the same extent as work he prepares, except that wherever possible, the A&E is required to assemble the background information and data necessary to decisions and work out tentative solutions for approval.

Evaluation of Materials. The incumbent is under constant pressure by manufacturers to specify or permit use of their products, manufactured systems, etc., or to give them competitive advantage. Since in some of Government funds qualified products cannot be eliminated from competition, he must analyze and study the products, processes, etc., they offer and decide their acceptability for inclusion in the specifications. Many of such offerings are new developments for which experience records in service have not been established. In all cases it is necessary to study the engineering data, characteristics and design to either conclusively establish its acceptability or develop specific objections that will stand up under protests to the Navy Department and members of Congress. The incumbent has the authority to decide whether the specific material is suitable for use in the various projects.

Guide Specifications. The incumbent prepares guide specifications for types of work that (1) occur frequently, (2) are problem areas frequently causing controversy or unsatisfactory finished work, (3) can and should be standardized, (4) new materials for which adequate specifications have not been prepared previously. These guide specifications are issued to and made mandatory for use by A&E firms, and are furnished on request to naval activity PWOs, other field divisions of NAVFAC, and NAVFAC. They have the effect of standardizing such work utilizing materials that are satisfactory for use by the Navy.

III. CONTROLS OVER THE POSITION

The incumbent works under the general supervision of the Head of the Specifications Branch, Supervisory General Engineer, GS-13. He receives his assignments in the form of a written "Work Request" which provides a brief description of the location and scope of the work to be performed. The amount of construction money and the number of design hours appropriated for the project are also included. The incumbent is expected to discuss only major problems with his supervisor, suggesting solutions. He is also expected to keep the supervisor informed of the progress of his assigned projects in order to enable him to schedule future workload for the Branch. The supervisor reviews the finished products for technical adequacy and conformance to agency objectives.

In the incumbent's assigned projects, he refers to the Navy Design Manuals, various technical and testing standards, manufacturers' literature and testing reports.

IV. QUALIFICATION REQUIREMENTS OF THE POSITION

The successful performance of the duties of this position requires a broad basic knowledge of architecture with special qualifications in architectural materials, manufactured systems, construction methods and problems, and preparation of specifications. He must also have a good basic knowledge of contracts. He must be capable of applying these knowledges and his experience in clear, precise, and contractually sound language.

He must have a good working knowledge of Navy Department policies, procedures, and regulations and its philosophy of specifications and contractual approach.

He must possess knowledges of the sort and to the extent normally attainable through a course of study leading to a Bachelor's Degree in Architecture, plus additional broad and progressive experience in responsible charge of design or preparation of architectural specifications.

This position is NONCRITICAL-SENSITIVE and requires a security clearance up to and including SECRET.

Architect
GS-808-12

I. INTRODUCTION

This position is located in the Architectural Branch, Design Division, OICC, _____. The Branch is responsible for the functional and esthetic architectural for a wide variety of types of structures required to accomplish the mission of the OICC, in the geographic area of concern.

II. MAJOR DUTIES AND RESPONSIBILITIES

A. The incumbent is Project Design Engineer for designated projects that are accomplished by A&E contractors. On such assignments, the incumbent attends and participates in conferences with the A&E and other OICC staff engineers, as well as sponsor representatives, to provide technical coordination and guidance to all concerned. He further provides liaison with OICC components to assure timely decisions regarding pertinent engineering matters and coordinates the review of progress submittals.

B. The incumbent designs, with respect to function and esthetics, and prepares working drawings for, the more complicated and important projects for which such work is accomplished. Project assignments vary according to Branch workload over the entire field of structures required by sponsors. Designs include the many stages of development from sketches through preliminary and final design as may be required to define the project, obtain funds and/or to keep the project within available funds, and adequately fulfill the functional and esthetic requirements. Coordinates work with other engineers of the Design Division to assure full coverage of the project in plans, specifications and estimates.

C. Assists in the preparation and/or review of preliminary planning reports and Shore Station Development Project Reports prepared by others, from an architectural standpoint.

D. Provides professional and technical consultation service on architectural matters.

(Much of the work described above requires pioneering in new or controversial areas, due to unique site locations and environmental conditions involved).

III. CONTROLS OVER THE POSITION

The immediate supervisor of this position is the Manager, Architectural Branch. Contacts with the supervisor are primarily to discuss certain project priorities, status of particular important assignments, certain matters of policy, procedures and objectives. The incumbent's work is expected to reflect the best and most economical engineering design, completeness and accuracy in engineering details, practicality in construction, and compliance with established scope and criteria.

Architect
GS-808-11

I. INTRODUCTION

This position is located in the Architectural Branch, Design Division, OICC, _____ This Branch makes architectural studies, performs design work, and prepares plans and specifications for project construction, advance plans architectural features of projects, provides assistance in preparation of technical portions of contract specifications, examines and modifies, as required, the plans and specifications prepared by A&E firms for construction and advance planning projects. The Branch also provides consulting service to the Construction Division relative to contract requirements, and reviews contractors' shop drawings to insure compliance with contract plans and specifications. The incumbent specializes in architectural projects and problems involved in the construction work under the cognizance of the OICC.

II. MAJOR DUTIES

A. The incumbent is for designing assigned portions of architectural projects and facilities for installations constructed by the OICC, _____ Such facilities include a variety of architectural and engineering features peculiar to contingency construction operations in outlying areas.

B. Prior to award of contracts to A&E firms, the incumbent prepares, as assigned architectural portions of project scopes. Such work is monitored and coordinated by higher grade architectural personnel of the Branch.

C. As assigned, participates with higher grade personnel of the Branch in investigations of an architectural nature. Such investigations including studying architectural projects in the field, and recommending basic changes or solutions to problems encountered during the construction process.

D. As assigned, assists in the preparation and/or review of preliminary planning reports and Shore Station Development Project Reports prepared by others. Such work is monitored and coordinated by higher grade architectural personnel of the Branch.

(Much of the work described above requires pioneering in new or controversial areas, due to unique site locations and environmental conditions involved.)

III. CONTROLS OVER THE POSITION

The immediate supervisor of this position is the Manager, Architectural Branch, who makes work assignments, approves leave, and initiates the incumbent's efficiency ratings. Normally, work assigned will be performed under the general direction of higher grade architectural personnel of the Branch, who will provide advice and guidance during the performance of the work, and will spot-check completed work for obvious accuracy and compliance with established objectives and guidelines.

Attorney-Advisor, General
GS-905-13

I. INTRODUCTION

The position is the Counsel for the OICC. Incumbent furnishes legal advice and services to the OICC in matters of business and commercial law for real estate, procurement, housing, labor relations, taxation, and public utilities.

II. MAJOR DUTIES AND RESPONSIBILITIES

a. Procurement. Preparation or approval of contracts, change orders, letters of award, etc., and interpretation and application of these documents in connection with construction, maintenance and operation of facilities. Consideration, negotiation, and if necessary litigation of claims by contractors or others arising from a procurement. Negotiation, preparation and interpretation of agreements with foreign authorities concerning a procurement.

b. Real Estate. Negotiation, preparation or approval of documents, and interpretation of laws for acquisitions and disposals of Navy facilities. The incumbent presents the U.S. position in respect to real estate arrangements with foreign governments.

c. Housing. Negotiation, preparation or approval, and interpretation of agreements and laws in connection with rental or construction of housing facilities and cooperative arrangements for housing with foreign governments and private parties.

d. Public Utilities. Negotiation, preparation or approval, interpretation, and administration of agreements for utility services.

e. Labor and Taxation. Interpretation and administration of compliance with U.S. and foreign tax and labor laws and regulations.

III. CONTROLS OVER THE POSITION

General supervision and guidance come from Navy General Counsel. Technical supervision is furnished by NAVFAC Counsel, which advises on particular problems and informs on new legislation, regulations and interpretation. Incumbent works without supervision on almost all week-by-week problems. He acts alone to represent the U.S. in dealing with foreign governments and private authorities on business legal matters. Most actions are final and not subject to review. Those matters reviewed by higher authority are on facts developed by the incumbent, subject to preliminary actions and positions he has taken.

IV. QUALIFICATIONS FOR THE WORK

Incumbent must be a member of the bar, thoroughly familiar with U.S. procurement laws and regulations. He must be able to learn foreign legal requirements promptly as they apply to Command work. He represents the U.S. in dealing with contractors and with foreign authorities.

Budget Officer
GS-560-13/12

I. INTRODUCTION

This position is that of Manager of the Budget Branch. This Branch is responsible for the development, management, and coordination of budgetary and financial matters which consists of planning, formulating, preparing and justifying budget programs which will estimate and control allotments and expenditures required to efficiently and economically accomplish the missions and objectives of the Officer in Charge of Construction. Construction funds vary from 100 to 200 million dollars per year, with an annual administration budget of approximately 6 million dollars.

II. MAJOR DUTIES AND RESPONSIBILITIES

In order to carry out the purpose of the Branch, and with direct responsibility for the legality and adequacy of results, the incumbent coordinates, plans and directs the development, maintenance and review of the following functions:

A. Budget Preparation and Execution. Developing, compiling, justifying the OICC Annual Budgets. Recommending allocation of funds to allotment administrators by programs and functions and internal revisions thereto, as required. Working closely with top management, representatives of the Bureau, and management officials of various activities to assure that budgets are prepared in accordance with current laws, regulations and instructions. It is mandatory that budgets be based upon functions, programs, and projects. It is his responsibility to relate mathematically and systematically allotment and expenditure requirements to progress, scope, trend and unit cost of operation, maintenance, and administrative programs. This is accomplished through statistical research, interpretation, and application of standards and results; the analyses of direct and comparative costs; the interpretation of Division requirements for specific programs; and through a comprehensive understanding of the component parts of the OICC mission as related to the whole. All technical data developed by operating divisions having technical control of matters of engineering planning, construction, Public Works, Public Utilities, and Civil Works with the OICC is subject to his study and research to determine their effect on monetary requirements and long-range budgetary planning and for inclusion in the annual budgets with complete and factual unit cost justifications. The incumbent interprets and serves as authority and consultant on Navy budgetary responsibilities as indicated in Congressional Acts, Bureau of the Budget reports, Department of Defense requirements, NAVFACENGCOM directives, and circular letters affecting the operation of the command.

B. Budget Review. Reviewing, analyzing and coordinating budget estimates and justifications submitted to NAVFACENGCOM for the operation of various components of the OICC. The incumbent holds conferences with division heads to acquaint himself with the contemplated programs, prevailing conditions, workload, staffing, work procedures, and to obtain factual data for assistance in the analysis and recommendation to be made to the Bureau. Based on the results of analyses and conferences, the incumbent prepares firm recommendations to the OICC for subsequent transmission to NAVFACENGCOM as to reducing, increasing, or deleting items in the budget, with complete justification and comments to support each entry on the form. Reviews expenditures made to expenditure accounts and job orders to determine if funds are being expended as budgeted for.

C. Program Analysis. Collection, analysis, and presentation of statistical operating data to be used for budget and control purposes; comparison of overhead cost against planned requirements; analyses of variances and recommendations of remedial action for controllable deviations; and the preparation of graphic presentation of statistical information. These statistical data facilitate internal control of programs and functions of the OICC, and are a source of compact information which management requires to control the various functions and programs. Analyze all cost against planned requirements and investigate deviations and make recommendations for corrective actions. Conduct special studies and investigations aimed at the improvement of program requirements by use of evaluations, workload data, material cost, and personnel requirements.

D. Policy Planning. The incumbent acts as consultant to the OICC and his staff in budgetary matters; furnish information relative to such areas as multiple financing of a contract or project; reprogramming of funds to finance a project with a revised scope; redistribution of personnel in order to stay within the Bureau approved established ceiling and manpower allowance; recommend new procedures to be established. Disseminate information on appropriation responsibilities, legality of expenditures, fiscal and accounting methods that will best meet the needs of the OICC.

III. SUPERVISION OVER OTHERS

Has administrative and supervisory responsibility for the Branch. Schedules and reviews subordinate's work, trains new personnel, instruction or methods and directs the applied efforts of personnel within the Branch. Advise subordinates of new procedures and methods or revisions of policy.

Performs such administrative functions as preparation of performance ratings, granting of leave, preparation of instructions, notices and applicable correspondence, furnish information relative to the status of programs and funds and other administrative duties, including the release of correspondence.

IV. CONTROL OVER THE POSITION

The incumbent is under the administrative supervision of the Director, Financial Management Division, who provides help only at top level policy forming basis.

Budget Analyst
GS-560-11, 9

I. INTRODUCTION

Serves as Analyst in a Budget Branch, Financial Management Division and is responsible for the development, preparation and administration of the OICC budget for administration amounting to approximately three million dollars.

II. DUTIES

1. Budget Preparation: Following established procedures issues memorandums to operating officials calling for budget estimates. Reviews such feed back information against previous years data to determine reasonableness and discusses total budget requests or individual items with the various Division Director, ROICC and the DOICC/ Saigon. Such discussions are to develop justification for specific budgeted items and to determine whether budgeted items are realistic in trends or projected work loads and programs.

a. Consolidates individual budget requests and justifications into OICC's budget.

2. Budget Presentation: Prepares OICC/SEA's budget in final form along with justification and forwards to the Bureau via DIRPACDOCKS. As necessary develops additional information to justify or to explain specific items.

3. Budget Execution: Upon receipt of funds recommends allocation of funds among various programmed budget areas using as guides experience data and initial budget estimates. Continuously reviews trends of obligations versus individual annual planning figures for marked deviations. Reappraises budget programs in the light of such variances and recommends action as reprogramming of funds among the various budget areas, request for additional funds, curtailment of current work and the like.

4. Prepares directives regarding utilization of funds and establishes procedures for procurement of administrative material. Monitors all programs in connection with his function to insure that budget regulations and requirements are complied with. Monitoring is performed by review and approval of procurement documents.

5. Prepares as required analysis and reports reflecting current budget status for review by management. This includes in addition to budgetary statements such other items as narrative reports, charts and graphs.

6. Incumbent does not supervise on a full time continuing basis but clerical support may be assigned to him during peak workload periods.

III. CONTROLS OVER POSITION

Incumbent is supervised by Manager of Budget Branch. Assignments are made in general terms and work is reviewed on a spot check basis or during utilization of budget information in the normal course of work performed. The supervisor will provide specific instructions for matters involving policy precedent matters.

Guides used are Military Assistance Manual, NAVFAC manuals, supply manual and other directives pertaining to budget matters.

Budget Technician
GS-560-7/5

I. INTRODUCTION

This position is located in the Budget Branch of the Financial Management Division, which is responsible for formulating, developing, justifying, presenting and administering budgets for the OICC and furnishing technical assistance on, and budgetary matters. The purpose of this position is to perform various technical and procedural tasks in formulating, developing, justifying and administering budgets.

II. MAJOR DUTIES AND RESPONSIBILITIES

Assists the Budget Analyst/Budget Officer in developing budget estimates by compiling information for completion of schedules; pricing man hours by applying mathematical computations; estimating travel costs using historical data to determine cost per day; excerpting data from machine listings for use in comparisons and evaluations; reviewing and analyzing budget estimates submitted by OICC components to determine if funds are justified, noting for the supervisor where justifications are needed; and translates data into prescribed budget format.

Performs detail work in the preparation of execution plans for upon receipt of funds for the budgets. Prepares worksheets to reveal trends of certain items such as leave, overtime, travel and material costs; reviews financial and management reports to assure that charges are made to the correct appropriations. Prepares portions of worksheets which are utilized in analyzing costs, forecasting, etc.

Compiles data for management reports related to the budget. Edits internal budget reports for conformity with prescribed format, consistency, and accuracy.

Performs miscellaneous tasks involved in budget work which will provide an opportunity for the incumbent to gain knowledge of the organization and improve his skill in the budget field.

III. CONTROLS OVER POSITION

This position is under the supervision of the Budget Officer. Work assignments will be specific and will be spot checked during progress and on completion for conformance with instructions and guides. The incumbent will normally accomplish routine or recurring assignments within well established guidelines without detailed instructions as to format, methods, etc. However, detail instructions

will be given for assignments involving new, changed, or incomplete guidelines.

IV. QUALIFICATION REQUIREMENTS

Educational background and/or experience that would indicate he incumbent is capable of mastering Navy accounting and budget procedures. Ability to adapt to sudden and sometimes drastic changes in procedures. Must possess tact and ability to get along with others.

Civil Engineer Supervisory (Structural)
GS-810-13

I. INTRODUCTION

The incumbent of this position serves as the Manager, Structural Branch, Design Division, OICC _____

II. MAJOR DUTIES AND RESPONSIBILITIES

A. As the OICC engineer responsible for structural engineering design matters, personally, or through subordinates, provides assistance and guidance to A&Es, the OICC, other staff members, and personnel of participating offices. Projects will involve such activities as developmental and feasibility studies, site surveys and preliminary planning, other structural engineering investigations, preparation of preliminary and final plans and specifications, and continuous coordination with engineers concerned with other aspects of the installations. Because of the requirement demands, site locations and environmental conditions, the work is complicated by many new and unique features.

B. The incumbent is responsible for the review and evaluation of structural engineering aspects of A&E feasibility studies, preliminary engineering reports, and final plans and specifications. Responsible for determining compliance with the sponsor and NAVFAC criteria, and recommends approval, change or modification. Coordinates work with that performed by other OICC staff engineers, and together with them and ROICC personnel, insures conformance with overall plans and with the requirements or recommendations of other offices.

C. Makes field trips, independently or as a member of a team, to the construction sites, to associated organizations, or to other locations to secure or to provide information and assistance in regard to functions previously indicated. During visits to the sites, investigates structural engineering problems and furnishes guidance and direction for their solution. Performs technical surveillance of construction phases pertaining to structural engineering features. Insures that structural systems and components comply with construction contract requirements. Initiates action for changes to plans and specifications required by on-site conditions and develops engineering data to support such changes.

D. The incumbent is responsible for the preparation and completion of final designs for civil and structural features of projects to be used by the contractor on the construction of facilities. Supervises professional engineers, technicians and draftsmen in the performance of the above functions.

II. CONTROLS OVER THE POSITION

The incumbent of this position reports to the Director of the Design Division who provides general guidance regarding project objectives, priorities and OICC decisions. Actual operations and details of the work performed are normally not reviewed and little technical advice is provided. The incumbent is expected to plan and accomplish work independently and is held responsible for technical results.

Supervisory Civil Engineer,
GS- 810-13

I. INTRODUCTION

This position is that of Manager, Inspection Branch, Construction Division, of the OICC. The operation involves responsibility for construction of a wide range of facilities being constructed under a major CPFF contract approximating placement of construction at the rate of $100 million per year. Inspection staff are located at a number of field sites. Staff numbers include U. S. personnel, local nationals, and third country personnel.

II. MAJOR DUTIES AND RESPONSIBILITIES

The incumbent plans, organizes, and administers the field inspection of all construction contracts assigned to the Construction Division. In accomplishment of this overall responsibility, the incumbent:

a. Assigns all construction inspectors, construction representatives, area engineers, to the Resident Officer in Charge of Construction responsible for each contract. Assignments are developed in conjunction with Directors of Construction of North and South Areas who coordinate activities among the construction sites assigned for their administration.

b. Is responsible for the supervision, including direction and overall management of all the methods by which specific duties assigned to the regional engineers are carried out.

c. Provides construction advice and counsel to subordinates on problems presented for solution, direction, construction inspection procedures.

d. Conducts special field engineering investigations for correction of unforeseen conditions.

e. Provides professional advice and guidance to local contractors on proper construction and engineering methods.

f. Makes and reviews recommendations on change orders and prepares estimates for changes where site conditions will affect the estimate.

g. Makes a final inspection of all NBy contracts as a representative of the Directors, Construction Division, and makes recommendations concerning the acceptance by OICC.

h. Is responsible for administering the on-the-job training program for personnel assigned to the Inspection Branch. This program includes the rotation of job assignment, technical engineering and administrative training for civilian and military personnel assigned.

III. SUPERVISION RESPONSIBILITIES

The incumbent directs a small staff of Construction Engineers and Construction Representatives assigned to the OICC staff who are assigned responsibilities in carrying out central staff functions and responsibilities as outlined above. Activities are carried out through direct contact with personnel at the construction sites.

IV. POSITION CONTROLS

The incumbent will be directly supervised by the Director, Construction Division. Instructions given are very general in nature in as much as the incumbent is expected to have broad experience and maturity to fill the position. Decisions are accepted with minimal review by the Division Director, except in those instances having to do with major policy or highly controversial matters where precedent actions are contemplated. Work is evaluated mainly on the basis of policy and administration. The incumbent will be also guided by applicable NAVFAC Instructions, including but not limited to technical publications, Contract Administration Manual, and standard specifications, as well as applicable Department of Navy directives.

V. QUALIFICATION REQUIREMENTS OF THE WORK

This position requires a knowledge of construction engineering principles and theory of the type, scope and thoroughness typically acquired through the completion of a four-year course of study, leading to a Bachelor's Degree in an accredited college or university. In addition, requirement of four years construction engineering experience in the field. Such experience must include at least two years of contract administration in the Government Service. It is highly desirable that the incumbent have had at least one year of administrative office experience.

Civil Engineer Supervisory
GS-810-13

I. INTRODUCTION

The incumbent of this position serves as the Manager, Civil Branch, Design Division, OICC, _____.

II. MAJOR DUTIES AND RESPONSIBILITIES

A. As the OICC engineer responsible for civil engineering design matters, personally, or through subordinates, provides assistance and guidance to A&Es, the DOICC for Operations1 other staff members, and personnel of participating offices. Projects will involve such activities as developmental and feasibility studies, site surveys and preliminary planning, other civil engineering investigations, preparation of preliminary and final plans and specifications, and continuous coordination with engineers concerned with other aspects of the installations. Because of the requirement demands, site location and environmental conditions, the work is complicated by many new and unique features.

B. Responsible for the review and evaluation of civil engineering aspects of A&E feasibility studies, preliminary engineering reports, and final plans and specifications. Responsible for determining compliance with the sponsor and NAVFAC criteria, and recommends approval, change or modification. Coordinates work with that performed by other OICC staff engineers, and together with such personnel and those of the ROICCs, insures conformance with overall plans and with requirements or recommendations of other offices.

C. Makes field trips, independently or as a member of a team, to the construction sites, to associated organizations, or to other locations to secure or to provide information and assistance in regard to functions previously indicated. During visits to the sites, investigates civil engineering problems, and furnishes guidance and direction for their solution. Performs technical surveillance of construction phases pertaining to civil engineering features. Insures that civil engineering systems and components comply with construction contract requirements. Initiates action for changes to plans and specifications required by on-site conditions and develops engineering data to support such changes.

D. Responsible for the preparation and completion of final designs for civil engineering features of projects to be used by the contractor on the construction of facilities. Supervises subordinate professional engineers, technicians, and/or draftsmen in the performance of the above duties.

III. CONTROLS OVER THE POSITION

The incumbent of this position reports to the Director of the Design Division who provides general guidance regarding project objectives, priorities, and OICC decisions. Actual operations and details of the work performed are normally not reviewed and little technical advice is provided. The incumbent is expected to plan and accomplish work independently and is held responsible for technical results.

Civil Engineer
GS-810-12

I. INTRODUCTION

This position is located in the Structural Branch, Design Division, OICC, _____ The functions of the Structural Branch are to plan, design and develop waterfront and floating structures, industrial structures, single and multi-storied buildings, bridges, towers, underground structures, tunnels and structures to attenuate the effects of nuclear weapons. In addition the Branch provides structural technical consulting service to activities throughout the geographic: area under the cognizance of the OICC,_____ in the design of structures and facilities.

The incumbent will be assigned duties of developing, designing and coordinating projects relating to the design of tunnels, floating bridges, bridges, towers, storage tanks, buildings and blast-resistant structures against the effects of nuclear or conventional weapons, etc. The materials of construction include reinforced concrete, steel, masonry, aluminum, wood, and combinations thereof, including the adaptation of pre-build military components, e.g., hospitals, etc.

II. MAJOR DUTIES AND RESPONSIBILITIES

Most of the assignments to this position include working out the particularly difficult or complex features of structural design projects, or those where unusual problems of coordination occur with other activities, sponsors, etc.

A. Studies and investigates structural engineering problems at construction sites, as directed, and prepares reports related thereto.

B. Plans, designs and prepares contract plans, preliminary plans and related reports concerning structural engineering aspects of projects under the cognizance of the OICC, _____ These include the types of projects indicated in I., above.

C. Assists in the preparation and/or review of preliminary planning reports and Shore Station Development Project Reports prepared by others.

D. Develops layouts and locations of surface and subsurface installations.

E. Provides professional and technical consultation service on structural engineering matters.

F. Administers A&E contractors' work on structural engineering matters for assigned contracts, including

preparation of scope of work, coordination, and review and acceptance (or rejection) of work performed.

(Much of the work described above requires pioneering in new or controversial areas, due to the unique site locations and environmental conditions involved.)

III. CONTROLS OVER THE POSITION

The immediate supervisor of this position is the Manager, Structural Branch. Contacts with the supervisor are primarily to discuss certain project priorities, status of particular important assignments, policy matters, procedures and objectives. The incumbent's work is expected to reflect the best and most economical engineering design, completeness and accuracy in engineering details, practicality in construction, and compliance with established scope and criteria. Review of completed work is made only to insure adequate achievement of objectives.

Supervisory Civil Engineer
GS-810-12

I. INTRODUCTION

This position is in the Inspection Branch, Construction Division of the OICC. The incumbent is responsible for the quality of inspection of all contracts in an assigned area as a representative of the OICC providing administrative, technical engineering, and inspection support to Directors of Construction and ROICC's or REICC's in the North and South construction areas.

II. MAJOR DUTIES AND RESPONSIBILITIES

a. Makes preliminary review of plans and specifications for problems and deficiencies affecting construction and recommends changes prior to contract award or preliminary to placing construction.

b. Provides technical engineering support to construction activities. In accordance with standard and guidance of the OICC in conformance with NAVFAC and Navy or other sponsor assures that construction procedures and products are uniform at sites assigned. In accomplishing this he provides construction advice and guidance and interpretations to field engineering and inspection personnel. Works with local contractors in developing their capability for understanding and execution of construction requirements. Conducts engineering investigations in support of ROICC or REICC activities in the field and advises them of applicability of change orders to problems studied. Provides technical support to field units in negotiations with contractors prior to change order decisions.

c. Carries out required programs of training for inspection personnel at sites assigned. This may involve U.S. civilian or military personnel, third country, or local personnel. Programs normally develop knowledge of personnel in achieving objective of uniform understanding and application of construction and inspection guidance. Personnel are experienced in techniques applicable to construction.

III. POSITION CONTROLS

The supervisor is the Manager, Inspection Branch who makes long-range assignment of work areas of the incumbent' and provides advice and counsel as needed Guides are contract plans and specifications, and technical directives of the sponsor, NAVFAC and the OICC.

IV. QUALIFICATION REQUIREMENTS OF THE WORK

This position requires a knowledge of construction engineering principles and practices such as that acquired through completion of Bachelor's Degree requirements at the university level supplemented by a minimal three years field construction experience.

Civil Engineer
GS-810-12

I. INTRODUCTION

This position is located in the Civil Branch, Design Division, OICC _____. The Branch is responsible for all major civil engineering design work performed for projects under the cognizance of the OICC.

II. MAJOR DUTIES AND RESPONSIBILITIES

A. Plans, designs, and prepares contract plans, preliminary plans and related reports concerning civil engineering aspects of projects under the cognizance of the OICC _____. These include roads, aircraft runways and parking aprons, crane and rail tracks, sewage disposal systems, water supply systems, drainage system, underground utility lines, tunnels, earthwork, soil stabilization, dredging, harbor and channel improvements, harbor moorings, and roofless structures such as culverts, retaining walls, seawalls, groins, bulkheads, cofferdam, valve pits, seaplane ramps, and any other similar project required for contingency c6nstruction in the geographic area.

B. Studies and investigates civil engineering problems at construction sites, as directed, and prepares reports related there to.

C. Assists in the preparation and/or review of preliminary planning reports and Shore Station Development Project Reports prepared by others.

D. Develops layouts and locations of surface and subsurface installations.

E. Prepares topographic, hydrographic, cadastral, and location maps.

F. Plans, directs and participates in topographic, hydrographic, cadastral and construction surveys.

G. Provides professional and technical consultation service on civil engineering matters.

H. Administers A&E contractor's work on civil engineering matters for assigned contracts, including preparation of scope of work, coordination, and review and acceptance (or rejection) of work performed.

I. Applies value engineering to all projects with which he is associated.

(Much of the work described above requires pioneering in new or controversial areas, due to the unique site locations and environmental conditions involved.)

III. CONTROLS OVER THE POSITION

The immediate supervisor of this position is the Manager, Civil Branch. C9ntacts with the supervisor are primarily to discuss certain project priorities, status of particular important assignments, certain matters of policy, procedures and objectives. The incumbent's work is expected to reflect the best and most economical engineering design, completeness and accuracy in engineering details, practicality in construction, and compliance with established scope and criteria. Review of completed work is made only to insure adequate achievement of objectives.

Civil Engineer
GS-810-11

I. INTRODUCTION

This position is located in the Structural Branch, Design Division, OICC,_____. This Branch makes engineering studies, performs design work and prepares plans and specifications for project construction, advance plans structural features of projects, provides assistance in preparation of technical portions of structural contract specifications, examines and modifies, as required, the plans and specifications prepared by A&E firms for construction and advance planning projects. The Branch also provides consulting service to the Construction Division relative to contract requirements, and reviews contractors' shop drawings to insure compliance with contract plans and specifications. The incumbent specializes in structural engineering projects and problems involved in the construction work under the cognizance of the OICC.

II. MAJOR DUTIES AND RESPONSIBILITIES

A. The incumbent is responsible for designing assigned portions of structural engineering projects and facilities for installations constructed by the OICC,_____. Such facilities include a variety of engineering features peculiar to contingency construction operations in outlying areas.

B. Prior to award of contracts to A&E firms, the incumbent prepares assigned portions of project scopes. Such work is monitored and coordinated by higher grade engineering personnel of the Branch.

C. As assigned, participates with higher grade personnel of the Branch in engineering investigations of a structural nature. Such investigations include studying structural engineering projects in the field, and recommending basic changes or solutions to problems encountered during the construction process.

D. As assigned, assists in the preparation and/or review of preliminary planning reports and Shore Station Development Project Reports prepared by others. Such work i~ monitored and coordinated by higher grade engineering personnel of the Branch.

(Much of the work described above requires pioneering in new or controversial areas, due to unique site locations and environmental conditions involved.)

III. CONTROLS OVER THE POSITION

The immediate supervisor of this position is the Manager, Structural Branch, who makes work assignments, approves leave,

and initiates the incumbent's efficiency ratings. Normally, work assigned will be performed under the general direction of higher grade engineering personnel of the Branch, who will provide advice and guidance during the performance of the work, and will spot-check completed work for obvious accuracy and compliance with established objectives and guidelines.

Civil Engineer,
GS-810-11

I. INTRODUCTION

This position is located in the Civil Branch, Design Division, OICC, _____. This Branch makes engineering studies, performs design work and prepares plans and specifications for project construction, advance plans civil engineering features of projects, provides assistance in preparation of technical portions of contract specifications, examines and modifies, as required, the plans and specifications prepared by A&E firms for construction and advance planning projects. The Branch also provides consulting service to the Construction Division relative to contract requirements, and reviews contractors' shop drawings to insure compliance with contract plans and specifications. The incumbent specializes in civil engineering features and problems involved in the construction work under the cognizance of the OICC.

II. MAJOR DUTIES AND RESPONSIBILITIES

A. The incumbent is responsible for designing assigned portions of civil engineering projects and facilities for installations constructed by the OICC, _____. Such facilities include a variety of engineering features peculiar to contingency construction operations in outlying areas.

B. Prior to award of contracts to A&E firms, the incumbent prepares assigned civil engineering portions of project scopes. Such work is monitored and coordinated by higher grade engineering personnel of the Branch.

C. As assigned, participates with higher grade personnel of the Branch in engineering investigations of a civil nature. Such investigations include studying civil engineering projects in the field, and recommending basic changes or solutions to problems encountered during the construction process.

D. As assigned, assists in the preparation and/or review of preliminary planning reports and Shore Station Development Project Reports prepared by others. Such work is monitored and coordinated by higher grade engineering personnel of the Branch.

(Much of the work described above requires pioneering in new or controversial areas, due to unique site locations and environmental conditions involved.)

II. CONTROLS OVER THE POSITION

The immediate supervisor of this position is the Manager, Civil Branch, who makes work assignments, approves leave, and initiates the incumbent’s efficiency ratings. Normally, work assigned will be performed under the general direction of

higher grade engineering personnel of the Branch, who will provide advice and guidance during the performance of the work, and will spot-check completed work for obvious accuracy and compliance with established objectives and guidelines.

Civil Engineer
GS-810-11

I. INTRODUCTION

Serves as a Civil Engineer in the Specifications Branch of the Design Division. This branch provides complete specification writing service for all functions under the Design Division cognizance. Duties include preparation of project specifications for all types of construction projects, drafts for amendments to cover revisions on drawings and/or specifications, review of specifications prepared by other personnel in the Design Division and/or by outside Architectural-Engineering firms.

II. MAJOR DUTIES AND RESPONSIBILITIES

1. Composes, dictates and/or writes project specifications for all types of construction, including difficult and specialized structures such as hospitals, power plants, sewage disposal plants, water filtration plants, school buildings, administration buildings, hangars, warehouses, ammunition storage magazines, quarters, messhalls, drill halls etc. 40%

2. Prepares drafts for amendments to cover revisions on drawings and/or specifications made prior to bid opening date; and amendments to cover changes in drawings and/or specifications made after award of contract. 10%

3. Reviews and corrects rough drafts for projects specifications, and amendments prepared by personnel in other branches of the Design Division. 15%

4. Reviews and corrects project specifications, and amendments prepared by outside Architect Engineer firms retained during period of heavy workloads. 15%

5. Gives consulting service on occasions to personnel of the Design Division, Construction Divisions in matters relating to completed, current, and future projects. 5%

6. Occasionally visits local job sites for the purpose of ascertaining existing site conditions affecting the preparation of specifications, and consults with material and manufacturers' representatives as to cost and availability of materials. 10%

7. Performs other related duties as assigned. 5%

III. CONTROLS OVER THE POSITION

1. Serves under the general technical and administra-

tive supervision of the Head of the Specifications Branch. Receives work assignments from the Branch Head with a statement as to scope of project, time schedules, cost limitations and overall objectives to be achieved. Special assignments are made verbally and are usually augmented with supporting documents and engineering data. Other assignments are received in the form of memos, requests for information and reports requiring action.

2. Completed work on in-house design projects is generally reviewed for overall conformance to established objectives and sound engineering practices. Technical adequacy is reviewed from an overall viewpoint and reviewed on an occasional basis for uniformity of instructions, status of projects, proper relations, etc.

IV. QUALIFICATION REQUIREMENTS OF THE WORK

1. Completion of a required course of studies in an accredited college or university leading to a bachelor's degree in Civil Engineering. The ability to direct and coordinate important activities and to solve complex problems1 and to communicate both orally and in writing are also essential qualifications for successful performance.

Clerk
GS-301-5/4

I. INTRODUCTION

This position is located in the Material Branch of the OICC. It is established to provide on-site review of the labor and material costs incurred by a CPFF contractor on a particular project or sub-project. The actual work location will, therefore, be at the construction site.

II. MAJOR DUTIES & RESPONSIBILITIES

a. As the on-site representative of the government the incumbent is responsible to:

1. Verify the attendance of contractor's employees by observing check in and check out and by spot checking work operations.

2. Insure that employees of the contractor are properly assigned to work within their rating by spot checking work operations.

3. Determine that all overtime work, leave, temporary assignments, etc. are properly authorized in accordance with approved procedures.

4. Verify the quantities & description of all materials and equipment delivered to or removed from the job site by personally checking deliveries and shipments.

5. Insure that all required paperwork on materials and equipment is properly prepared including loss and damage reports, shipping orders, inventories etc.

6. Monitor the contractor's camp operations to insure that all requirements regarding eligibility of users, collection and charges, security and control of camp supplies and equipment, administration and operation of service facilities, and the like are adhered to.

b. Compares observations with the contracter's records and labor charges. Attempts to reconcile any discrepancies. Discrepancies which can not be reconciled are reported to his supervisor for further action.

c. Prepares reports of labor, attendance, work distribution, etc. and reports on material receipts and issues equipment usage. As necessary reports any discrepancies in contractors reports, failures to meet established requirements, instances of carelessness or negligence, or other observed occurrences which require remedial action.

d. Performs related duties, as required.

III. CONTROLS OVER THE POSITION

The incumbent works under the supervision of the Head Labor and Material Checker who assigns work areas, explains policies, procedures requirements, provides assistance upon request and spot checks work performance. Since the supervisor is not located at the job site the incumbent must carry out his duties and responsibilities on own initiative in accordance with guides and instructions.

Clerk-Stenographer
GS-00312-4

I. INTRODUCTION

The position is that of clerk-stenographer for the OICC.

II. MAJOR DUTIES AND RESPONSIBILITIES

a. Takes dictation without interruption. As assigned, attends meetings and monitors telephone calls, recording and transcribing summary notes of conversations. (25%)

b. Reviews all outgoing correspondence of a variety of subjects, generated in an organization of 9-35 technical staff members, checking for clerical accuracy, clarity and clearances through other concerned offices. (25%)

c. Files highly specialized subject matter and other materials for a fairly complex office. Recognizes the need for and establishes temporary project files. Revises permanent files to meet changing office activities. Controls classified materials. Disposes and retires material not in current records disposition schedules. (25%)

d. Serves as office receptionist, using wide knowledge of office programs and functions to answer inquiries. Schedules appointments for superiors. Obtains information only vaguely identified by superiors. Searches files, libraries and outside sources, extracting information in original, written summary, or oral form. (25%)

III. CONTROLS OVER THE POSITION

Works under general supervision of the OICC. Carries out continuing duties independently in accord with established office policy, practices and guides. Supervisor explains new and difficult assignments of changes in procedure. Completed work is subject to spot-check. Informational and clerical services are reviewed periodically for general effectiveness.

IV. QUALIFICATION REQUIREMENTS OF THE WORK

Certified ability to take dictation and to type at the rate of 40 words per minute.

Clerk-Typist
GS-322-3

I. INTRODUCTION

The position is that of clerk-typist for the OICC. This position is typical of a number of positions in the organization to which similar duties are assigned.

II. MAJOR DUTIES AND RESPONSIBILITIES

a. Types a variety of material1 some with specialized terminology, from rough draft (longhand, edited copy, many insertions) directly to final form. Responsible for final spacing and arrangement of complicated material, referring to guides and technical source material. (40%)

b. As assigned, composes routine correspondence such as replies to requests for information, work orders, requisitions, and similar routine communications where content and format may be partially based on previous correspondence. (15%)

c. Receives, reads, sorts, logs, attaches reference material to, and distributes incoming mail, reports, and other documents, applying thorough knowledge of subject matter cognizance of technical staff members. Follows up to insure reply deadlines are met. Reads, assembles and checks out-going mail for completeness1 readiness for dispatch and general conformity to correspondence manual and standing instructions. (10%)

d. Maintains records as assigned, including extracting and posting specified data, performance specified arithmetical computations or grouping and compiling data in accordance with detailed instructions. Operates adding and calculating machines as needed. Proofreads for spelling, punctuation and typographical accuracy. (20%)

e. Performs miscellaneous duties as assigned, such as maintenance of office supplies and technical libraries, preparation of time and attendance reports and other incidental duties. (15%)

III. CONTROLS OVER THE POSITION

Works under general supervision of the OICC and direct supervision of a Branch Head.

IV. QUALIFICATION REQUIREMENTS OF THE WORK

Certified ability to type 40 words per minute.

Supervisory Computer Specialist
GS-334-13/14

I. INTRODUCTION

This position is that of Director, Management Information and Systems Division, under the Deputy OICC for Programs and Finances, OICC, _____. The incumbent serves as primary technical assistant to the DOICC for coordinating OICC surveillance and interface with contractor-operated ADP applications1 for providing data processing services for the OICC organization, and for the establishment and maintenance of an effective, up-to-date Management Information Center for the OICC.

II. MAJOR DUTIES AND RESPONSIBILITIES

A. Conducts continuous review of the contractor's ADP applications and policies to determine adherence to contractual requirements in compliance with DOD prescribed instructions and procedures. Reviews, evaluates and recommends approval or disapproval of contractors' requests for new equipment and/or modification to ADP hardware configurations, or software packages. Heads committees for the development, implementation and review of ADP systems, and guides ADP activities of such committees to assure that reports, recommendations, or systems definitions developed by the committees are consistent with OICC policy.

B. Coordinates between the OICC and the contractor ADP Management in the area of application interface for the proper integration and correlation of their ADP requirements. Formulates relative objectives, plans and policies to satisfy their needs; consults and advises both parties as necessary. Makes recommendations in the development of short and long range computer concatenation between the contractor's in-house applications and related OICC applications for the logical assimilation of the contractor's and the OICCs; data banks into an inter-related mechanism for uses in dynamic contract management and financial status control.

C. As required, consults with other U.S. Government agencies regarding their respective ADP requirements in the geographic area. Supports their systems and programming needs by personally assisting or directing subordinates in the development and establishment of procedures and ADP techniques, including the design and preparation of special computer programs and the writing of special project reports associated with such assignments.

D. Studies proposed and actual projects in terms of machine capabilities, costs and man/machine hours to determine validity and credibility of contract proposals. Recommends best alternate approach based on realistic OICC needs and workload projection. Configurates and analyzes various equipment mixes for presentation to the OICC Data Processing Management in the determination of the most acceptable model. Undertakes extensive equipment studies to determine cause and effect of "multi-programming," "simultaneous input-output processing," "on-line processing," or any other hardware/software device capability which may increase operating efficiency.

E. Functions as a system-programming consultant in the resolution of extremely complex problems. Disseminates advanced theory in the development and preparation of machine-logic solutions to business and engineering OICC data processing applications. Gives direction and guidance to lower level positions. May undertake to write intricate software packages not otherwise available.

F. Stays abreast of technical data processing advances in the sciences of computer systems and programming, through active participation in related activities and perusal of technical magazines, books, etc.

III. CONTROLS OVER THE POSITION

The incumbent works under the general administrative guidance of the Deputy for Programs and Finances, who provides policy guidance and information. Technically, the incumbent's work is unreviewed within the OICC. Decisions are arrived at independently and supervisory review is limited to results achieved and conformance with policy objectives.

Computer Specialist
GS-334-12, 11

I. INTRODUCTION

This position is assigned to the Automatic Data Processing Branch OICC, The incumbent will be working with data processing systems as related to all phases of OICC management. Included in this area are: Fiscal Accounting, Design, Construction Reporting, Personnel Administration and Total Systems Integration.

II. MAJOR DUTIES AND RESPONSIBILITIES

A. Working from ADP requests, the incumbent is required to:

1. Analyze general information concerning the requestors requirements and expand and amplify this information into processes to be accomplished. Specify the procedures required to generate the work product desired.

2. Design and formulate Systems charts for application by programmers into programming systems. Determine the need for processing runs and segments necessary to the requestors problem.

3. Develop formats and layouts for individual tape files or records involved. Establish optimum length of individual records, length of data fields, the order and sequence of data items. Determines the need for and provides necessary control fields to insure the accuracy of computations or decision making processes.

4. Analyze the Input/Output data path and determine the most feasible and efficient flow of data from source to user.

B. Required to understand substantive decision making rules involved in Systems Processes and to provide for their accomplishment by computer methods.

C. Require programming skill in the manipulation of data such as:

1. Difficult Matrix comparisons.

2. Complex searches of extensive tables.

3. Numerous levels of summing, accumulations, sub-totaling and cross-footing.

4. Simultaneous production of numerous reports requiring complex logic to develop dissimilar

Formats in difficult sort sequences.

5. Develop logic to accommodate situations in which no one combination of criteria is suitable for every record or transaction.

6. Use of highly complex stringing or sequencing procedures, construction of dictionaries, complex

D. Must be able to conduct feasibility studies through the development of data systems specifications and overall systems design.

E. Required to maintain System Documentation.

F. Incumbent may be assigned as project leader and therefore will be required to provide technical direction to junior/senior programming (GS-7, 9, 11, 12).

III. CONTROLS OVER THE POSITION

Incumbent will be expected to work with minimum technical supervision. Prefer five (5) years of Systems Analysis and Programming experience with at least one (1) of the years in COBOL Programming. Incumbent will be under the direct supervision of the Systems and Programming Supervisor in the ADP Division of OICC, RVN.

Computer Programmer
GS-334-7

I. INTRODUCTION

This position is that of Computer Programmer and is located in the Data Processing Branch.

II. MAJOR DUTIES AND RESPONSIBILITIES

a. Prepares procedures of work considered for tabulations; modifies established EDP and key punch procedures to comply with changing conditions.

b. Assists in the installation of new EDP procedures until the operation fulfills tabulating and related requirements

c. Works in conjunction with those departments serviced, establish their EDP needs.

d. Applies a working knowledge of statistical system or accounting in order to appraise relative advantages of EDP method from this standpoint of economy, time and accuracy.

e. Participates in program writing, flow charting, study and redesign, conversions research and investigations, feasibility and EDP Application studies, project administrative duties and any tasks to which the incumbent is assigned.

f. Engages in the writing of printer applications through the use of automatic generating packages, such as RPG and other utility type routines.

g. Specifically the incumbent will provide assistance in the preparation and maintenance of the EDP User's Manual on Program Management. This document instructs the user in the methods used for submitting accurate input data; in how to make corrections and adjustments to the EDP Master Files; and contains all necessary information pertaining to EDP reports and their distribution.

h. Maintains a constant state of training on EDP equipment, languages, operations, methods and techniques, procedures, computer systems and applications used in the project.

III. CONTROLS OVER THE POSITION

In Incumbent works under the general guidance of Digital Computer Systems Analyst and/or a Computer Programmer. The immediate supervisor is the EDP Division Director.

IV. QUALIFICATION REQUIREMENTS OF THE WORK

Ability to research, analyze and compile data in a logical manner and to translate findings into flowchart procedures and programmable form. Incumbent must have intimate knowledge of capabilities and limitations of the reporting system.

Computer Technician
GS-335-7

I. INTRODUCTION

This position is assigned to the ADP Branch, OICC. The incumbent will be working with data processing systems as related to all phases of OICC management.

II. MAJOR DUTIES AND RESPONSIBILITIES

Studies computer set-up sheets and determines best possible equipment set-up and tape unit assignment for each run operation. Collaborates with computer specialists and/or computer programmers on the modularization (I/O relationship for continuity of computer runs with minimum operator interference) of computer runs.

Using the computer I/O reports (Bedsheets), sets-up each program run by grouping proper input tapes (masters) to related input criteria such as punched cards, paper tape, and/or magnetic tape. Hand prepares outside labels for the identification of computer generated tapes. Routes source/object program decks, control cards, data input, set-up sheets, halt & restart procedures to the computer operations after logging each package onto the control register.

Maintains an up-to-date file of all source and object program decks used in support of OICC RVN data processing requirements. Also, responsible for maintaining a comprehensive library of ADP Control Procedures for each OICC RVN computerized application. Assure that contents of these manuals are comprehensive and inkeeping with the ADP Division Instructions on documentation. Informs computer specialists and/or computer programmers of any discrepancies for immediate correction.

Confers daily with Operations Management on status of scheduled OICC RVN computer runs. Makes adjustments to schedule slippage to insure that ADP Division work commitments to user departments are met. Consults computer specialists and/ or computer programmers if schedule conflict necessitates assignment of priority for processing of tasks.

Works in close liason with the Operation & Control section (RMK-BRJ) in maintaining the OICC RVN library of reels of magnetic tapes used for ADP purposes. Classifies and catalog reels of tape in accordance with such factors as data content and type of routing. Prepares record for OICC RVN tape file reference. Routes reels for storage according to classification designation.

Logs all incoming and outgoing OICC RVN computer runs. If attended runs are desired, keeps congizant computer specialist and/or computer programmer aware of schedule status and exact time that job will be processed.

Incumbent is responsible for the control and distribution of OICC RVN generated reports to individual users. If necessary assists in the separation and binding of these reports.

Performs other clerical functions as deemed necessary by the ADP Division Director.

III. CONTROL OVER THE POSITION

Incumbent will work directly for the ADP Division Director and will be required to work with minimum supervision.

IV QUALIFICATION REQUIREMENTS OF THE WORK

Incumbent must have (2) years of general experience in Automatic Data Processing. Prefer additional specific experience in Computer Production and Scheduling and a technical knowledge of computer tape oriented system. Position requires the handling of heavy input & output data therefore, incumbent must be physically qualified to perform this function.

Computer Technician
GS-334-7/5

I. INTRODUCTION

This position is in the Automatic Data Processing Division, Officer in Charge of Construction. The incumbent is responsible for updating and preparing reports or other formats, interpretation of source material, coding and developing mechanical and clerical procedures for the establishment of a punched coded paper tape for use on the Flexowriter or for use by the Naval Facilities Engineering Command as a direct input to computer operations.

II. MAJOR DUTIES AND RESPONSIBILITIES

A. The incumbent is responsible for taking the following raw input data received from various components of OICC and reporting same to proper form for input to the Flexowriter.

1. All fiscal and accounting data required for updating the financial and project status reports.

2. Date on scheduled dates, contract document numbers, current working estimates and method of accomplishment.

3. Data on In-house estimates of cost and correlate with official accounting records to insure flexibility of commitments and proper assignment of charges against line items.

From the above basic data and other data supplied on a case basis, the following reports are Prepared:

a. Military Construction Program Status Report (NAVDOCKS 2319)

b. Military Construction Program Authorization (NAVDOCKS 2318)

c. Feeder Report for ASD (I&L) 6610 Report

d. Project Status Report (NAVDOCKS 11013/1)

e. Contract Activity Report

f. Miscellaneous letters, records and reports required on a continuing and/or irregular basis.

B. The incumbent is responsible for knowing the programs assigned to her to the category code level and must research backup data on transmittal documents and tabulate

to dollar status.

C. The report requiring the most effort of the incumbent is the Military Construction Program Status Report. Complete detailed knowledge of NAVFAC Instructions covering this report is essential. Also a good working knowledge is required of the Military Construction Programming and Financial Management systems. Coordination of input data from obligation requests, contract award letters, posting control tickets, etc., received from many components must be received and coded for machine application for daily transactions. On a monthly basis the daily transactions are reconciled to the official accounting records. Any deviation must be reconciled by the incumbent.

III. CONTROLS OVER THE POSITION

The incumbent is under the supervision of the Program Analyst who is responsible for the NAVDOCKS 2318/2319 and other reports. Due to varied reporting requirements, guidance and assistance is furnished only as necessary as the incumbent must operate with a high degree of independence. Work is not checked on a transaction basis but adequate performance and efficiency are ensured by a cursory review. Incumbent uses as guidelines the NAVFACENGCOM directives and OICC directives.

IV. QUALIFICATION REQUIREMENTS OF THE WORK

This position requires a sound knowledge of fiscal and accounting procedures and the ability to operate and program for computer related operations. The incumbent's assignments are varied, and the high standard required for accuracy and comp1ete~ess in the Military Construction Transaction Reporting demand that the incumbent exercise a high degree of sound judgment, alertness and foresight. This position requires a thorough understanding and usage of the intricate program coding system established by NAVFACENGCOM to assemble and report numerous details of construction projects.

Computer Aid
GS-335-7/5
Automatic Data Processing

I. INTRODUCTION

This position is that of Data Processing Specialist. The Data Processing Specialist is responsible for programming and scheduling use of the flexowriter and the key punch machines and the processing of Data for the reporting system.

II. MAJOR DUTIES AND RESPONSIBILITIES

A. Keypunch

1. Insures correct data on key punch cards for transmission to Washington via AUTODIN. Must have thorough knowledge of keypunch programming for transmission of the 2318, program assignment, 2320 transactions, and any other reports.

2. Understand the mechanics of the keypunch machine and AUTODIN transmission process to reconciliate transmission errors.

3. Edits 2318 and 2320 punch cards and reviews print-out prior to AUTODIN transmission for accuracy of updating.

B. Flexowriter

Selects OICC Thailand correspondence reports and forms suitable for flexowriter questions. Performs all complex flexowriter and keypunch programming. Analyzes methods of improving reporting and makes recommendations for changes.

C. Computer

Schedules and is responsible for the delivery of all computer input. Must have basic knowledge of NavFac computer programming and is required to edit computer input for compatibility.

D. Supervision Over Others

Supervises and trains 3 clerk typist for the flexwriter and keypunch machine.

III. CONTROLS OVER THE POSITION

The immediate supervisor is a computer specialist. Review is of a general policy nature and the incumbent will use his own initiative in developing procedures and executing the reporting functions under jurisdiction to comply with

instructions available on specific reports. Where guides for special analysis are non-existent, requirements will be discussed and resolved with the supervisor and other members of OICC Thailand.

IV. QUALIFICAION REQUIREMENTS OF THE WORK

Experience in administrative practices and methods required for 5pecialized Navy and Department of Defense Data Processing operations. Ability to research, analyze and compile data suitable for computer input and other reporting media. Experience in operating and programming the flexowriter machine and the keypunch machine.

Computer Aid
GS-335-4

I. INTRODUCTION

Under direct supervision, performs a variety of Data Processing clerical and operations tasks. Generally these include: The validation and examination of source data; the quality control of computer generated reports; the maintenance of a magnetic-tape library; the operation of card punch/verifier and flexowriter equipment.

II. DUTIES

Sustains accuracy, correctness and appropriateness of input-output data by reviewing or examining the source material, reports, documents prepared, or other released material. Maintains a schedule of work in line with the schedule of the computer. Controls the overall accuracy of the work and takes necessary steps to get corrections made.

Maintains library of reels of magnetic or flexowriter tape used for automatic data processing purposes. Classifies and catalogs reels of tape and prepares the record for file reference.

Operates card punch and conducts other related duties involved in recording and/or verifying of data in tabulating cards as defined by written procedures.

Operates flexowriter equipment that converts business, and technical information previously recorded on source documents into printed records. Prepares coded paper tape for transmission of data to outside data processing agencies. Checks printing for legibility and specified format; and checks punched paper tape for correctness of eight-channel code.

Performs other clerical duties as required.

Supply Contract Administrator
GS-1102-14, 13

I. INTRODUCTION

The incumbent of this position serves as the civilian Director of the Contracts Division in the office of the Officer in Charge of Construction. The Contracts Department is responsible for the preparation, negotiation, and administration of all contracts awarded by the Officer in Charge of Construction. The incumbent serves as the principal OICC technical authority and advisor for negotiation and administration of contractual agreements.

II. MAJOR DUTIES

A. The AOICC for operations is directly responsible for approving and signing, for the Commander, Naval Facilities Engineering Command, contracts and other contractual documents prepared by the OICC/RVN. As Director, the incumbent is responsible for assuring that documents submitted for approval and signature are properly prepared and comply with all statutory and regulatory requirements.

B. The incumbent supervises, plans, schedules and manages the operation of the Contracts Department. As such, he is responsible for the technical and administrative aspects of the various contracts negotiated and awarded by the OICC/RVN, with exception of certain aspects of A&E and E-S contracts. The incumbent is primarily concerned with construction contracts awarded on a lump sum or cost plus award fee (CPAF) basis; however, he is responsible for the administrative aspects of A&E and E-S contract negotiations conducted in the Engineering Department by personnel located therein. In addition, the incumbent is responsible for fulfillment of all documentary and procedural requirements in effecting a negotiated contract.

C. During the course of performing duties concerned with the above responsibilities, the incumbent is responsible for supervision of the following:

(1) Solicitation, receipt, and analysis of contractor proposals; investigation and recommendation as to acceptability of late bids and other irregularities in proposals; pre-award investigation and preparation of findings of responsibility; preparation and review of notices of award; supervision of bonds and warranties.

(2) Orderly, expeditious, and responsible processing of contract documents, through subordinate supervisors, to ensure that necessary

procedures and documentation are accomplished in a legal, competent and timely manner.

(3) Providing guidance to assure consonance with procurement procedures established by Armed Services Procurement Regulation (ASPR), Navy Procurement Directives (NPD), and various instructions promulgated by NAVCOMPT, NAVFAC, NAVMAT; making recommendations for changes procurement policies or practices; obtaining clarification of procurement policies or procedures; obtaining or preparing necessary letters of authority.

(4) Reviewing and analyzing changes, claims, time extensions, and liquidated damages; interpreting contract terms and provisions; negotiation of changes in contract price or time; recommending disposition on claims and preparing OICC decisions thereon; preparation of OICC endorsements on claims forwarded to NAVFAC for final decisions when such are requested.

(5) Preparation and proper distribution of contractual documents and reports.

(6) Obtaining services of counsel for legal reviews for sufficiency, legal interpretations, and legal advice relating to claims and disputes.

(7) Locating lease-hold realty and negotiation of terms and conditions involved in the acquisition thereof, including lease-hold construction contracts; coordination with MACV in providing assistance to other U.S. Government agencies and contractors seeking lease-hold realty, as requested.

(8) Development and maintenance of lists of prospective bidders; preparation of information for public release concerning bids, contract awards, and similar matters.

(9) Preparation of interpretations, advice, and information for use by other members and elements of the OICC/RVN staff on matters relating to the preparation, execution, and administration of contracts.

D. In addition, the incumbent is responsible for occasional inter-service A&E contract work with the Department of the Army.

E. The incumbent directly supervises one GS-13 and others in the Contracts Division.

III. CONTROLS OVER POSITION

The incumbent reports to the AOICC for operations, a Commander, Civil Engineer Corps, U.S. Navy, for broad and general instructions regarding policy. He operates with full responsibility and authority for the normal operations of the Contracts Department and his performance is evaluated in terms of adequacy of final accomplishments.

IV. QUALIFICATIONS REQUIRED

The incumbent must have a sound technical and practical background in contract administration. He must be familiar with commercial and Navy procedures and practices relating to fixed price and cost plus contracts for construction, A&E, and E-S. He must have a fundamental knowledge of basic construction techniques and procedures.

Supervisory Contract Specialist
GS-1102-13

I. INTRODUCTION

This position is that of Director, Contracts Division, OICC, _____. The incumbent works under the general guidance of the Deputy OICC for Operations, and is responsible for taking all necessary actions within the framework of established policies, procedures and delegated authority, with respect to all types of contracts (A&E, construction, engineering services, maintenance and civil works), required to pursue the assigned mission of the OICC, except real estate.

II. MAJOR DUTIES

A. Plans and develops internal procedures for the accomplishment of the Division's functions, including setting up records, preparation of required correspondence and reports, training of staff and review of staff work, and coordinating Contract Division operations with those of other OICC components. Actively participates in establishing local or internal policies and procedures within the framework of Navy Procurement Regulations, Armed Services Procurement Regulations, P-68, and pertinent NAVFACENGCOM policies.

B. Responsible for promoting bidders' interest through contacts with local contractors, publicizing Navy work in local newspapers, etc.

C. Coordinates with local representatives of the Army and Air Force, as well as with local Government agencies, to assure compliance with pertinent DOD, Navy and NAVFAC policies and procedures, in the selection of prospective contractors.

D. Collects, analyzes, coordinates, investigates and maintains current information on local firms, individuals and organizations which may be considered as prospective contractors. Keeps informed of the many and varied sub-contractors/prime contractors and consultants/prime A&E relationships peculiar to the OICC sphere of operation, so that the Government's interest is protected in all contractual matters and possible areas of conflict of interest are eliminated. Interviews potential, prospective and selected contractors to explain and clarify Government and Navy contracting procedures; advise as to scope, conditions and terms of specific contracts; provides instructions regarding execution of awarded contracts in matters other than technical engineering aspects; discuss and reach agreements concerning contract performance and terms for contract termination, for other than technical engineering reasons.

E. Provides staff support, as required, in the preparation and administration of all A&E and engineering service contracts.

F. Reviews drafts of Invitations for Bids or Requests for Proposals, including plans and specifications, scope, terms and conditions of A&E, ES, construction, maintenance and service agreements, etc., to assure conformance with applicable parts of the ASPR, NPDs, NAVFAC procurement instructions, and local government agreements.

G. Advises and assists in negotiations on contract price and contractual terms. Reviews agreements reached to assure inclusion of and conformance to all required clauses and stipulations. Serves as member of various Contract Boards, and negotiates change orders not requiring Board action. Reviews all requests for change orders and evaluates each from a general contractual standpoint, with regard to significant effects of change orders on contractual terms.

H. Reviews all applications for time extensions on contracts administered by OICC, _____.

I. Prepares instructions and directives to DIRCON/ROICC offices on various matters related to contract procedures and administration. Makes administrative and business interpretations of contract terms and provisions, and recommends changes in contract terms, coordinating with technical personnel as appropriate.

J. Reviews and analyzes all types of claims; recommends decisions and disposition, prepares OICC decision and recommendations to the Naval Facilities Engineering Command when final decisions are requested. Negotiates claim settlements when so authorized. Coordinates all phases with technical and legal personnel, as appropriate.

K. Maintains technical surveillance over the performance of civilian personnel responsible for contractual procedures in subordinate field offices of the OICC, providing instructions and assistance as required.

L. Responsible for the preparation of various correspondence with contractors and NAVFAC where clarification or special authority regarding contract matters is required.

III. CONTROLS OVER THE POSITION

This position is under the general direction of the Deputy OICC for Operations, who provides advice and guidance on general policy matters. Technical contractual work performed by the incumbent is undertaken with a high degree of independence, within the framework of Federal, Navy and NAVFAC regulations and practices, and delegated authority.

Contract Specialist
GS-1102-12

I. INTRODUCTION

This position is located in the Contract Division, and is primarily concerned with the full range of contract negotiation and administration work regarding the design of U.S. and RVN military facilities and installations, such as, negotiation of contracts and change orders, thereto, preparation of contract documents, contract preparation, administration and interpretation, and price and cost analysis of proposals

II. MAJOR DUTIES AND RESPONSIBILITIES

a. Within assigned workload area, A/E-E/S Contracts, the incumbent is responsible for the following:

1. The incumbent is responsible for providing expert technical advice and assistance to the Division Chief in discharging his authority and responsibilities in connection with the procurement of Architect-Engineer, Engineering Services and Multi-task type services for all DOD and U.S. Mission agencies. Provides the expertise on the contracting aspects of individual projects from negotiation through contract administration to completion or termination where appropriate, through both direct participation in negotiations and advice to the project design officer and contractors.

2. Drafts contracting instruments, modifications, deductive change orders, novation agreements, and other documentation and actions required during the life of a contract. Maintains continuous surveillance of contracts to insure proper and sound application of governing policies, standards and procedures.

3. As member/recorder of the Contracts Award Board and Change Order Board he provides overall knowledge of the procurement situation, the special contract clauses which may influence prices and past procurement of the same services, and experience with the Architect-Engineer and similar factors.

4. Insures that some form of price of cost analysis is accomplished in connection with all negotiated procurement actions for Architect-Engineer services. For contract proposals exceeding $100,000, and utilizing audit input, performs costs analysis and evaluation of the contractors cost and pricing data, submitted on DD Form 633. Included in the review is the verification of cost data; the evaluation of specific elements of costs; and the projection of this data to determine the reasonableness of amounts estimated. Verifies allowances for contingencies; the basis used for allocation of over-head costs; and the appropriateness of allocations of particular overhead costs to the proposed contract. Advises the board which costs are allowable for the performance of the contract.

5. Prepares change orders and correspondence relative thereto of a highly technical nature and which frequently involve contract problems such as equitable adjustments pursuant to the War Risk Clause and reduction in contract price as a result of the Defective Cost and Pricing Data Clause.

III. CONTROLS OVER THE POSITION

a. Reports to the Chief of the A/E-E/S Division who provides necessary policy guides, advice and counsel, as required, but since only general areas of responsibility are defined, performs for the most part on his own. Review by supervisor in terms of final results and to determine progress with assigned responsibilities.

b. Guides include NAVFACENGCOM, COMPACDIVNAVFAC and OICC RYN Instructions and Notices, Armed Services Procurement Regulations, Navy Procurement directives decisions of the Comptroller General and NAVDOCKS P-68, Contract Administration Manual.

IV. QUALIFICATION REQUIREMENTS

a. Incumbent must have sound technical background in contract price negotiation and administration of A-E/E-S contracts, the ability to interpret contract documents and to develop solutions to contractual problems. Thorough familiarity with Armed Services Procurement Regulations and USN contract administration procedures is essential.

b. Personal work contacts are with U.S., Vietnamese and TCN contractors, local civilian officials, high making U.S. military and key civilian personnel of OICC RVN.

Contract Specialist
GS-1102-12/11

I. INTRODUCTION

This position is that of Contract Specialist, Contracts Division, OICC, _____ The incumbent works under the supervision of the Director, Contracts Division, and is responsible for providing technical contract advice, assistance and guidance regarding all types of contracts required to pursue the assigned mission of the OICC, except real estate.

II. MAJOR DUTIES

A. Participates with the Division Director in the development of, and implements, internal procedures for the accomplishment of the Division's functions. These include establishment of files and records, preparation of correspondence and reports, establishing local or internal policies and procedures within the framework of established DOD, Navy and NAVFACENGCOM policies and regulations, etc.

B. Contacts local contractors and arranges for publicizing Navy work in local newspapers to promote bidders' interest, as directed.

C. As directed, or as permanently assigned, coordinates with local representatives of specified DOD and local agencies to assure compliance with pertinent DOD, Navy and NAVFAC policies and procedures, in the selection of prospective contractors.

D. Analyzes, investigates and maintains information on assigned local firms, individuals and organizations which are considered prospective contractors. Provides instruct ions regarding execution of awarded contracts in matters other than technical engineering aspects.

E. Provides staff support in the preparation and administration of assigned A&E and engineering service contracts.

F. Prepares drafts of Invitations for Bids or Requests for Proposals, except plans and specifications, for assigned A&E, ES, construction, and maintenance contracts, service agreements, etc.

G. As assigned, advises and assists in negotiations on contract price and contractual agreements. Reviews agreements reached to assure inclusion of and conformance to all required clauses and stipulations. Reviews and evaluates change order requests from a general contractual standpoint, and recommends appropriate action to his supervisor. Also reviews applications for time extensions on assigned contracts, and recommends appropriate action.

H. Reviews contractor claims as assigned, and recommends appropriate disposition to the Division Director, taking into consideration applicable policies and regulations.

I. Prepares a variety of correspondence concerning assigned contracts.

III. CONTROLS OVER THE POSITION

The incumbent serves under the supervision of the Director, Contracts Division, who makes work assignments and reviews finished work for technical adequacy and conformance with applicable regulations and policies. The incumbent is expected to carry out work assignments with a high degree of independence.

Contract Specialist
GS-1102-9

I. INTRODUCTION

This position is located in the CPAF Contract Division, and is primarily responsible for a range of contract administration work regarding the design and construction of military facilities and installations. Types of documents include construction contract (cost-plus-award-fee), Change Orders and attendant Board Reports thereto.

II. MAJOR DUTIES AND RESPONSIBILITIES

a. Within assigned workload area, the Contracts Division, the incumbent is responsible for the following:

1. Responsible for receipt of official mail pertaining to CPAF Contract Division. Assures that required action is taken on all applicable correspondence and authorizing documents are annotated on the cards in the master file and properly filed in the respective project working folder. Authorizing documents are the following: (REAM) - Request for Estimate and Authorization to Mobilize; (DTP) - Direction to Proceed; (NTP) - Notice to Proceed; (NTPA) - Notice to Proceed Amendment; (ATD) - Authorization to Dredge; (ATI) - Authorization to Issue Mineral Products.

2. Assures timely receipt of list of projects scheduled for negotiation. Prepares negotiation summary sheet for the projects that are to be negotiated into the contract by Change Order. Research each project for current status as to previous negotiation and dollar value of the project.

3. Checks the Contractor's detail sheet of cost estimates for each project that has been negotiated. Each entry on the detail sheet must be checked for project number, authorizing document, nomenclature, location and negotiated amount.

4. Prepares rough draft for spreadsheet as an enclosure to the Board Report. All projects negotiated are to be annotated on the spreadsheet to reflect the Contractor's cost estimate detail sheet. Since the fee varies for work performed under the CPAF Contract, extensive research must be maintained to assure legitimacy of the fee applied.

5. Prepares negotiation Board Reports and Change Orders assuring technical adequacy and adherence to established procedures, policies and requirements.

6. Drafts less complex or routine type contract

7. Assists in the interpretation and applicability of contract clauses, pertinent instructions and notices, NAVDOCKS P-68, Contract Administration Manual, Armed Services Procurement Regulations and other directives pertaining to contractual procedures and policies.

III. CONTROLS OVER THE POSITION

a. Incumbent reports to the Division Director to whom he has been assigned who provides necessary policy guides, advice and counsel, as required. Review by supervisor is in terms of work in progress and final results for technical adequacy. Complex or unusual assignments are explained in detail and alternative solutions to problems suggested.

b. Guides include NAVFACENGCOM, and OICC instructions and notices. NAVDOCKS P-68, Contract Administration Manual, Navy Procurement Directives, Armed Services Procurement Regulations and Decisions of the Comptroller General.

IV. QUALIFICATION REQUIREMENTS

a. Incumbent must have a sound technical background in the area of civil works design and construction contract administration and the ability to interpret contract documents and to develop solutions to contractual problems. Thorough familiarity with USN contract administration procedures and contract format is essential.

Construction Representative
GS-01640-11

I. INTRODUCTION

The position is in the Construction Division of the ROICC office. Incumbent is field representative of the OICC for construction and demolition contracts and Mobile Construction Projects as assigned.

II. MAJOR DUTIES AND RESPONSIBILITIES

a. Makes preliminary review of plans and specifications for problems related to construction, recommending changes prior to contract award or construction placement.

b. Inspects contracts daily for work progress. Authorizes minor field changes which do not alter the scope of the contract nor result in added cost.

c. Reviews and passes on contractor's monthly payment requests based on work done and materials delivered.

d. Investigates and recommends on contractor's requests for time extension and on his claim for extras based on changed conditions.

e. Arranges final inspection, makes recommendations concerning liquidated damages.

f. Supervises construction inspection and office personnel located on the site.

III. CONTROLS OVER THE POSITION

Supervised by an area representative, an engineer, Construction and Inspection Branch, mainly on policy, programming, intent and objectives of assigned projects. Engineering advice and guidance is provided by the area engineer. The supervisor is informed of work progress on all projects. Guides are contract plans and specifications, and technical directives of the sponsor, Navy Regulations, NAVFAC and the OICC.

IV. QUALIFICATION REQUIREMENTS OF THE WORK

Knowledge of construction engineering and extensive construction experience including supervisory background are required for the position. Experience sh6uld have covered a wide range of projects.

Construction Inspector
GS-809-09

I. INTRODUCTION

The position is in the Construction Division, OICC office. Incumbent is responsible for inspection of construction contracts

II. MAJOR DUTIES AND RESPONSIBILITIES

a. Reviews contract plans and specifications to anticipate difficulties in construction.

b. Inspects work-in-place construction on a daily basis under guidance of Construction Representative.

c. Verifies adequacy of completed construction.

III. POSITION CONTROLS

Supervised by Construction Representative, incumbent is responsible for on-site inspection of construction, judging quality of contractor's performance daily.

IV. QUALIFICATION REQUIREMENTS OF THE WORK

Five years of construction engineering experience or the equivalent is required.

Construction Inspector
GS-00809-07

I. INTRODUCTION

This position is in the Construction Division of an OICC Office. Incumbent is responsible for inspection of construction contracts on-site. These cover a range of facilities including buildings, pavements.

II. MAJOR DUTIES AND RESPONSIBILITIES

a. Inspects construction of buildings, airfields, power lines, pipe lines, paving, piers and bridges; installation of heating, air conditioning, plumbing, sprinkler systems, galley equipment, and electrical equipment.

b. Prepares daily inspection reports on procedure, weather conditions, safety, work in progress, trades on the job, hours, contractor's equipment, materials, delays, test results and changes to “as built" conditions. Standard reporting format is used for this purpose.

III. POSITION CONTROLS

The supervisor is the Construction Representative or the civilian engineer or military officer in charge of the construction project. Work is orally and visually reviewed.

IV. QUALIFICATION REQUIREMENTS OF THE WORK

Broad knowledge of various trades and crafts to compare plans and specifications for the project with actual construction practices, methods and workmanship in several trade groups. Experience will have been gained from craft training and experience on assignments as an inspector in a program devoted to training of inspectors.

Editorial Assistant
GS-1087-7

I. INTRODUCTION

The position is located in the Public Affairs Office. The purpose of the position is to perform writing-editing and general public affairs duties for the Public Affairs Officer.

II. MAJOR DUTIES AND RESPONSIBILITES

1. Writes and edits information material to be used internally or by general news media. Keeps in close liaison with all codes within the OICC, as well as related DOD activities, for feeder information to be incorporated into the weekly newsletter. This requires personal visits to the various divisions for interviews with employees, supervisors and contractor personnel. Writes stories of weekly developments in the organizations and items of interest to OICC and contractor personnel.

2. Researches information from such sources as American Embassy, directives, periodicals, newspapers, personal contacts and any other source directed by the Public Affairs Officer.

3. Determines style, format and context of material to be published in final form of weekly newsletter. Has authority to accept or reject material submitted for publication. In preparing the newsletter, works completely on his own initiative and only the final product is reviewed by the Public Affairs Officer and DOICC.

4. Revises and rewrites articles written for limited audiences in order to improve presentation in terms of the interests of the audience for which the material is intended.

5. Performs appropriate public affairs administrative functions which relates to production and distribution of the weekly newsletter and news releases.

6. Meets and works with individuals of the news corps, U.S. Agencies and members of the general public.

7. Occasionally escorts members of the news media to construction sites and to such locations where the media might observe the subject of his story first hand.

8. Record notes and minutes of interviews given to members of the news media by any officer, supervisor or

employee of the OICC or contractor under the administration of the OICC.

9. Apply sound judgment and logic in the evaluation of any news article, OICC function, activity or policy which might reflect an unfavorable or inaccurate image of the OICC or contractor.

III. CONTROLS OVER THE POSITION

The incumbent will work under the general supervision of the Public Affairs Officer, who will outline broad objectives and provide guidelines for program accomplishment.

IV. QUALIFICATION REQUIREMENTS OF THE WORK

The position requires that the incumbent have a knowledge of standard administrative and office procedures, including correspondence and filing practices. He should have a general background or past experience in writing for publication. He should have a typing proficiency of 40 words per minute and knowledge of security regulations for classified material. The incumbent must have the ability to express himself clearly in conversation and writing, and work effectively and harmoniously with others under extreme pressure and short time deadlines. The incumbent must be capable of original thought processes and have the ability to implement original systems of administrative and public affairs procedures.

Electrical Engineer Supervisor
GS-850-13

I. INTRODUCTION

The incumbent of this position serves as the Manager, Electrical Engineering Branch, Design Division, OICC,

II. MAJOR DUTIES AND RESPONSIBILITIES

A. As the OICC engineer responsible for electrical engineering design matters, personally, or through subordinates, provides assistance and guidance to A&Es, the DOICC for Operations, other staff members and personnel of participating offices. Projects will involve such activities as developmental and feasibility studies, site surveys and preliminary planning, other general engineering investigations, preparation of preliminary and final plans and specifications, and continuous coordination with engineers concerned with other aspects of installations. Because of the requirements demands, site location and environmental conditions, the work is complicated by many new and unique features.

B. Responsible for the review and evaluation of electrical engineering aspects of A&E feasibility studies, preliminary engineering reports, and final plans and specifications. Responsible for determining compliance with the sponsor and NAVFAC criteria, and recommends approval, change or modification. Coordinates work with that performed by other OICC staff engineers, and together with such personnel and those of the ROICC, insures conformance with overall plans and with requirements or recommendations of other offices.

C. Makes field trips, independently, or as a member of a team, to the construction sites, to associated organizations, or to other locations to secure or to provide information and assistance in regard to functions previously indicated. During visits to the sites, investigates electrical engineering problems, and furnishes guidance and direction for their solution. Performs technical surveillance of construction phases pertaining to electrical engineering features. Insures that electrical systems and components comply with construction contract requirements. Initiates action for changes to plans and specifications required by on-site conditions and develops engineering data to support such changes.

D. Responsible for the preparation and completion of final designs for electrical features of projects to be used by the contractor for the construction of facilities. Supervises subordinate professional engineers, technicians and/or draftsmen in the performance of the above duties.

III. CONTROLS OVER THE POSITION

The incumbent of this position reports to the Director of the Design Division who provides general guidance regarding project objectives, priorities, and OICC decisions. Actual operations and details of work performed are normally not reviewed and little technical direction is provided. The incumbent is expected to plan and accomplish work independently and is held responsible for technical results.

Electrical Engineer
GS-850-12

I. INTRODUCTION

This position is located in the Electrical Branch, Design Division, OICC, _____. This Branch makes engineering studies, performs design work and prepares plans and specifications for project construction, advance plans electrical features of projects1 provides assistance in preparation of technical portions of electrical contract specifications1 examines and modifies, as required, the plans and specifications prepared by A&E firms for construction and advance planning projects. The Branch also provides consulting service to the Construction Division relative to contract requirements, and reviews contractors' shop drawings to insure compliance with contract plans and specifications. The incumbent specializes in electrical engineering concerning major problems of transmission and distribution design.

II. MAJOR DUTIES AND RESPONSIBILITIES

A. The incumbent is responsible for designing electrical systems for installations constructed by the OICC, _____. The types of facilities designed include transmission lines, primary distribution overhead and underground lines, substations, interior electrical distribution, and lighting plans for a variety of installations.

B. Prior to award of contracts to A&E firms, the incumbent prepares electrical engineering portions of project scopes, as required. The scope outlines to the A&E the general amount and quality of work to be performed.

C. As directed, conducts or participates in engineering investigations of an electrical nature. Such investigations include studying electrical systems and projects, recommending basic schemes for expanding or improving systems and/or solutions to other electrical problems encountered in the construction process.

D. Assists in the preparation and/or review of preliminary planning reports and Shore Station Development Project Reports prepared by others.

E. Provides professional and technical consultation service on electrical engineering matters.

(Much of the work described above requires pioneering in new or controversial areas, due to unique site locations and environmental conditions involved.)

III. CONTROLS OVER THE POSITION

The immediate supervisor of this position is the Manager, Electrical Branch. Contacts with the supervisor are primarily to discuss specific project priorities, status of particular important assignments, certain matters of policy, procedures and objectives. The incumbent's work is expected to reflect the best and most economical engine e ring design, completeness and accuracy in engineering details, practicality in construction, and compliance with established scope and criteria.

Electrical Engineer
GS-8 50-11

I. INTRODUCTION

This position is located in the Electrical Branch, Design Division, OICC, _____. This Branch makes engineering studies, performs design work, and prepares plans and specifications for project construction, advance plans electrical engineering features of projects, provides assistance in the preparation of technical portions of contract specifications, examines and modifies, as required, the plans and specifications prepared by A&E firms for construction and advance planning projects. The Branch also provides consulting service to the Construction Division relative to contract requirements and reviews contractors' shop drawings to insure compliance with contract plans and specifications. The incumbent specializes in electrical engineering systems and problems involved in the construction work under the cognizance of the OICC.

II. MAJOR DUTIES AND RESPONSIBILITIES

A. The incumbent is responsible for designing assigned portions of electrical engineering projects and facilities for installations constructed by the OICC, . Such facilities include a variety of engineering features peculiar to contingency construction operations in outlying areas.

B. Prior to award of contracts to A&E firms, the incumbent prepares assigned electrical engineering portions of project scopes. Such work is monitored and coordinated by higher grade engineering personnel of the Branch.

C. As assigned, participates with higher grade personnel of the Branch in engineering investigations of an electrical nature. Such investigations include studying electrical projects in the field and recommending basic changes or solutions to problems encountered during the construction process.

D. As assigned, assists in the preparation and/or review of preliminary planning reports and Shore Station Development Project Reports prepared by others. Such work is monitored and coordinated by higher grade engineering personnel of the Branch.

(Much of the work described above requires pioneering in new or controversial areas, due to unique site locations and environmental conditions involved.)

III. CONTROLS OVER THE POSITION

The immediate supervisor of this position is the Manager, Electrical Branch, who makes work assignments, approves leave, and initiates the incumbent's efficiency ratings. Normally, work assigned will be performed under the general direction of higher grade engineering personnel of the Branch, who will provide advice and guidance during the performance of the work, and will spot-check completed work for obvious accuracy and compliance with established objectives and guidelines.

Electrical Engineer
GS-850-11

I. INTRODUCTION

This position is Electrical Estimator, Specifications and Estimating Branch, Design Division. Under direction of the Head of Estimating Section, incumbent will prepare electrical engineering estimates or review those prepared by A/E con-tractors for various projects coming under cognizance of the OICC/Thailand. These include, but are not limited to, air-fields, military camps, electrical systems, for hospitals, harbor installations, buildings, warehouses, etc.

II. MAJOR DUTIES AND RESPONSIBILITIES

1. Develops and prepares electrical estimates for structures, facilities and services concerning the various construction projects and characteristics, both U.S. and local country, as well as other factors. Investigates alternate materials and designs in order to reduce cost, increase capability or to enhance the feasibility of the projects. In addition, the incumbent assists in the preparation of all OICC planning estimates and prebid estimates.

2. Reviews electrical estimates prepared by A/E contractor firms. These reviews are made to ensure that the estimates are accurate and complete; are in accordance with the A/E contract requirements and design drawings; and will meet all requirements for award of the anticipated construction contracts.

III. CONTROLS OVER THE POSITION

Work is performed with a minimum amount of supervision from the supervisor who is the Head of Estimates Section. Day-to-day work is accomplished with no supervision. Controversial problems, the solution of which would be in deviation of current policies and/or procedures, will be discussed with the supervisor prior to taking final action. On projects for which no established guidelines are available, the supervisor will discuss the scope of it with the incumbent and may offer suggestions and comments on how it should be accomplished.

Guidance is also received and obtained through standard and technical engineering publications, NAVFAC directives, etc. that pertain to preparing cost estimates. It is necessary that considerable interpretation and deviation be made to adjust to local conditions, practices, and materials.

IV. OTHER

The incumbent must be a fully qualified professional electrical engineer and possess an engineering degree from a fully accredited college or university. Must possess extensive experience in the field of electrical estimate preparations for heavy construction. Have the ability and initiative to resolve problems of a controversial and complex nature rid to deal successfully with personnel of other organizations.

Engineering Technician
GS-802-11/9

I. INTRODUCTION

The position is in the Material Branch, Design Division. Responsibility of the Branch includes the evaluation and design of airfield and other pavements and their components. The purpose of the position is to assist the Engineering Staff by analyzing and evaluating airfield pavements, conducting laboratory support tests and reporting results.

II. MAJOR DUTIES AND RESPONSIBILITIES

A. Airfield Pavement Evaluations PERCENT OF TIME

1. Field work includes: Independently and/or as a member of the Airfield Pavement Evaluation Team, visits Naval and/or Marine Air Stations. Determines the location, type, and number of tests required to evaluate the worth of existing runways, taxiways, and aprons as to strength, the wheel load support, and/or required strengthening or replacement necessary. Performs plate load-settlement, in-place California Bearing Ratio, Soils Compaction and Density, and Subgrade Modulus Reaction Tests. 35%

2. Performs laboratory support tests, such as (a) Marshall Method Asphaltic Mixtures, (b) aggregate gradation, (c) Asphaltic extraction (d) Abson Method - Penetration and Ductility (asphalt), (e) Portland Cement Concrete Pavement (Flexural strength, splitting tests, job mix preparation and analysis), (f) Base and Sub-base Courses (Atterberg Limits, gradation, California Bearing Ratio, Moisture-Density and chemical analysis where necessary). Prepares report of findings. 35%

B. Airfield Pavement Evaluation Reports . Assists in the preparation of Airfield Pavement Evaluation Reports for each station in the Division as pavements are evaluated. 20%

C. Performs other duties as assigned. 10%

III. CONTROLS OVER THE POSITION

The immediate supervisor is the Branch Manager; however, day-to-day supervision is by the civil engineer in charge of Airfield Pavement Evaluations and related items of work. As technical support to the engineering staff uses independent judgment in determining the adequacy of evaluation and testing and in performing the necessary laboratory support tests. Guides available and used are Navy Department, Federal and NAVFAC Standards. Also used are ASTM, AASHO, U.S. Army Corps of Engineers, State Highway Departments, and other standard testing procedures.

IV. QUALIFICATION REQUIREMENTS

The position requires a general knowledge of civil engineering practices as it relates to the sampling and testing of all materials involved in the construction of airfields and foundations. It is likewise essential to have had experience with an accredited testing concern or public agency in personally sampling and testing airfield pavements and their components including foundations for same. Must be able to locate and properly evaluate weak areas in airfield pavements. From the field tests made, samples taken, and laboratory tests run, must be able to assemble the data, evaluate the pavements, and properly assist in preparing the Airfield Paving Evaluation Reports.

Equip. Specialist (Gen.)
GS-1670-12

I. INTRODUCTION

This position is that of Equipment Specialist in the Equipment Branch Officer in Charge of Construction.

The incumbent is responsible for developing and instituting programs to insure proper custody, usage, operation, maintenance, repair and disposal of approximately million dollars worth of Government-furnished transportation and construction equipment used on over CPAF and Lump Sum contracts. He is responsible for analyzing contractors' procedures, operations and use of equipment for the different projects and sites.

II. MAJOR DUTIES AND RESPONSIBILITIES

A. Serves as a technical advisor or consultant to the OICC, ROICCs, and Contractors in the proper operation, servicing, maintenance and repair of a large fleet or Government-furnished construction and transportation equipment. Works in coordination with top management levels of Contractors, OICC and ROICCs.

B. Responsible for establishing and maintaining an inventory and records program to be implemented by Contractors using GFE.

C. Evaluates efficiency and effectiveness of each Contractor's equipment management program and provides assistance in analysis and resolution of problem areas.

D. Performs continuing review of the CPAF Contractor's construction and transportation equipment inventory and requirements, making recommendations for transfer or disposal of excess equipment and procurement or rental of additional required assets.

E. Evaluates and recommends disposition by disposal or transfer of economically unserviceable or excess-to-needs equipment on the basis of its condition or requirements of the construction program.

F. Collects and analyzes construction and transportation equipment operating and maintenance data for the purpose of determining critical problem areas such as over or under-maintenance, excessively high or low usage, etc. Reviews equipment performance against standards, rated capacity and maintenance history.

G. Reviews and recommends revisions as necessary to Contractor equipment and spare parts procurement specifications. Analyzes bids for procurement of equipment and spare parts and for rental equipment in order to determine reasonableness and to make recommendations for award.

H. Reviews CPAF Contractor inventory and usage of equipment, spare parts, tools, and tires and projected requirements, making recommendations for approval/disapproval of Contractor purchase requests for equipment, spare parts, tools and tires.

I. Performs field inspections of on-site equipment operations and maintenance procedures. Reviews adequacy of Contractor's facilities for maintenance and repair of the Government-owned equipment. Prepares reports of inspections, including recommendations for improvements. Provides on-site maintenance and operations assistance.

III. CONTROLS OVER THE POSITION

Incumbent is responsible directly to the Head, Equipment Branch. His work is reviewed for adequacy and effectiveness. He is given broad authority and responsibility to freely conduct studies and reviews and institutes programs for control, proper use and maintenance of Government-furnished equipment. His analyses, recommendations and programs are relied upon heavily in control and scheduling of the work. Guides available include NAVDOCKS Manuals P-68 and P-7l, Navy Directives, commercial publications relating to equipment maintenance and cost, and other related publications.

IV. QUALIFICATION REQUIREMENTS OF THE WORK

This position requires a thorough background in the knowledge of cost, operation and maintenance of transportation and heavy construction equipment. Experience should include management and control of equipment operations and all phases of supply and procurement of related materials.

Equipment Specialist (Automotive)
GS-1670-9

I. INTRODUCTION

This position is located in the Equipment Branch, Resources Division of the OICC. This Office is responsible for the management and use of transportation resources, maintenance and operation, procurement of equipment and parts, replacements of and/or dispersal of worn automotive - Construction - Materials Handling equipment.

II. MAJOR DUTIES AND RESPONSIBILITIES

The incumbent performs the following duties and responsibilities:

A. Conducts research, development, and dissemination of information regarding identification, classification (including interchangeability), operation1 preservation, maintenance and repair of automotive and vehicular equipment, disposal, and the determination of value and rates of attrition of equipment and parts.

B. Implements scheduled and unscheduled maintenance programs for all OICC vehicles whether field assigned or based with OICC. The Vehicle Maintenance Program includes:

1. Maintains individual maintenance records on each vehicle and the regular scheduling of preventative maintenance service on a mileage or elapsed time basis, dependent on the area to which the vehicle is assigned and local operating conditions. These records include the date of and type of maintenance performed, the mileage, a listing of parts replaced and the cost of parts and labor. Whenever possible, all repairs will be inspected during the period of repair and after work is accomplished. All work and/or damaged parts will be inspected before being "surveyed." The adequacy of contractor operated or commercial repair facilities being utilized for OICC vehicles will be predetermined for the availability of qualified mechanics, the availability of required replacement parts, and the availability of required testing and inspection equipment.

2. Insures all vehicles assigned to the OICC are inspected at least once every 6000 miles or at not more than six month intervals. At this time an L.T.I. (Limited Technical Inspection) will be accomplished to reflect the overall condition of the vehicle. Inspection trips will be made to all areas to inspect vehicles periodically.

3. Implements a Driver Training Program which, in addition to teaching driving skills and verifying a knowledge of local vehicle operating traffic laws and U. S. Navy safe driving practices, will also provide a knowledge of proper vehicle care, cleanliness and maintenance procedures. Insures that all operators know the proper procedures for reporting mechanical deficiencies and damages due to operational wear and tear, accident, or abuse and carelessness.

4. Administers a Driving Testing and licensing program for all OICC Military and Civilian personnel. Prepares written test which each applicant must take; reviews physical fitness requiry (SF-47) form; accompanies applicant on a road test under actual driving conditions to determine capability of driver. Evaluates driving performance resulting in issuance of an SF-46 (Driving license) or disqualification of the applicant. May re-examine licensed personnel who are accident prone or become involved in major accident to determine qualification for continued operation of Government Vehicles.

5. Conducts necessary inspection of the contractor's maintenance facilities, organization, and utilization of such equipment and where possible make corrective suggestions to improve over-all maintenance program.

III. CONTROL OVER THE POSITION

Incumbent works under the supervision of the Equipment Branch Manager. Supervision is administrative, not technical in nature. Assignments are in terms of objectives to be accomplished with oral and written instructions to supplement basic assignments. Performance is evaluated on the basis of accomplished and efficiency of operations.

IV. QUALIFICATION REQUIREMENT FOR THE POSITION

The incumbent must have a thorough knowledge of the transportation and equipment maintenance field. Must have completed a vehicle and equipment maintenance course and performed the duties of a maintenance repairman for at least two years. Also, performed duties as a maintenance supervisor for at least two years.

Much of the day-to-day duties -- evaluating maintenance shop management, solving operational maintenance or repair problems1 conducting training in use, repair, and maintenance of equipment, determination of disposition of obsolete or unrepairable equipment -- are performed under general direction as described at the GS-11 level. Further, his authority is usually limited to making recommendations for purchase of tools and equipment, changes in maintenance methods, etc., which are more limiting than normal at the GS-12 level. However, the incumbent has responsibility for complete transportation and construction equipment systems used by CPAF and Lump Sum contractors throughout Thailand, without recourse to others for technical consultation, which in effect, results in considerable independence of action. In view of these latter considerations, the position is classifiable as Equipment Specialist (General)
GS-1670-12.

Equipment Specialist (Automotive)
GS-1670-11/9

I. INTRODUCTION

This position is located in Transportation Office, Administration Division of OICC Thailand, Bangkok, Thailand. This position is responsible for development of programs to ensure proper and adequate acquisition, delivery, custody, usage, operation, maintenance, return and disposal of government-owned vehicles and construction equipment.

II. MAJOR DUTIES AND RESPONSIBILITIES

A. Develops methods and procedures within framework of controlling directives for effective execution of assigned responsibilities. Provides for required contractual coverage on items peculiarly vehicular in nature to ensure conformance with developed policies and procedures by coordinating with Contracts Division. Insures that control Criteria are published and distributed and insures compliances. Develops and issues necessary standards and instructions for minimal operational and maintenance problem, inventory and spare parts, idle time, etc.

B. Confers as necessary with management and contractor to decide or discuss policy, procedures, control, and to help resolve differences.

C. Other duties performed or responsible for their performance are:

1. Acquisition and delivery, e.g., meeting time requirements for operational continuity, ensuring maximal use of available equipment and the need for new equipment, considering substitution or modification to provide an item quicker where the item used might otherwise lay up; evaluating availability, shipping time, relative costs of obtaining items versus substituting or modifying one on hand; coordinating scheduled usages to minimize additional needs; seeking alternate acquisition points; achieving emergency requirements, etc.

2. Custody control, e.g., ensuring proper receipt and acceptance, inventory control, Positioning or location, safeguarding from natural and criminal actions; reporting of inventory, usage, and location consistent with contract requirements; etc.

3. Usage control, e.g., prescribing usage limitations, rotation to maintenance, feeder requirements, fuel or power requirements, etc.

4. Operation control, e.g., determining qualification criteria for operators, availability of qualified operators, need for training, evaluation of operational deficiencies, provision for retraining to correct improper practices. Investigates motor vehicle accidents, including preparation of investigative report (SF 91A) and small claims forms for submission to MACTHAI. Reviews accident reports submitted by submission to OICC Washington.

5. Maintenance control, e.g., requiring in-service and scheduled periodic maintenance, emergency repair provisions, temporary replacements, etc.; providing appropriate standards and instructions, quality control criteria, spare parts requirements, handling, and inventory, etc.

6. Turn-in and disposal control, e.g., ensuring prompt turn-in for reassignment to needs of other projects, current reporting of future release dates for reassignment, provision for inspection upon turn-in to determine proper condition excluding normal wear and tear for assignment, deciding on future assignments, disposal or abandonment, arranging for pick-up and lay-up site, etc.

III. CONTROL OVER THE POSITION

The Manager of the Equipment Branch is the immediate supervisor. He provides policy guidance since the incumbent will be expected to act independently in providing advice to management and contractual personnel. He may be authorized to commit the activity on prescribed matters, subject to conformance with controlling directives from higher echelon.

Guides include contract administration directives and manuals, equipment operational and technical manuals, maintenance control criteria, and numerous other directives of the various bureaus controlling material categories and technical publications covering this material. These publications will seldom provide directly applicable guidance but will require considerable research, interpretation and adaptation.

File Clerk
GS-305-4

I. INTRODUCTION

This position is located in the Central Files Section. This is a centralized-records control point and contains official technical data relative to the various current projects and all completed construction work accomplished throughout the District. Is responsible for (1) receiving, cataloging, classifying, filing, and maintaining records of plans, drawings, specifications, standards, program cost estimates (PCEs), etc., for the Design Division, and other Divisions of the Command; (2) control and distribution of the plans and records; (3) administration of the 105mm microfilm program; (4) reproduction of films (5) records disposal involving the preceding files and non-record files throughout the Design Division; (6) control and assignment of NAVFAC drawing numbers throughout the various Naval Districts (7) procurement of consumable engineering and reproduction supplies for Design Division; and, (8) review of tracings for administrative, filming and reproduction requirements. This position provides assistance to the supervisor in the Operation of the area and in the implementation and adaptation of a revised system for locating contract drawings. This system initially provides for the filing of drawings according to (1) states, (2) city or location, (3) activity, and (4) by contract number, with cross reference files established by (1) contract number, (2) drawing number, and (3) type of facility or building. This will require the cataloging and classification of all drawings on file and preparation of separate reference cards for every building, structure, facility, system, etc.

II. DUTIES AND RESPONSIBILITIES

A. Maintains files of tracings, specifications, technical records, shop drawings and reproductions of plans for the Design Division, including microfilm and general correspondence files. Prepares file folder identification labels in accordance with NAVFAC DM-6 and SECNAVINST P5212.5B, "Disposal of Navy and Marine Corps Records".

B. Catalogs and classifies drawings by the preparation of index cards in multiple copy for the purpose of filing and cross referencing all plans, specifications and microfilms. The index cards are prepared for filing by the following sub-divisions: drawing numbers when number is not assigned by this EFD; by contract number; and, by type of facility, structure, utility and other identification as may be necessary. These cards, in each of the above categories, are filed by states, cities, and activities.

Assembles, identifies, and makes proper distribution of microfilms of all important contract drawings. This is done in two stages: for bid drawings, and again for record drawings. At each stage a decision must be made regarding the number of microfilm required. The type of funds for the construction and the type of construction must be known so that appropriate number of films are obtained and distributed in accordance with NAVFAC DM-6. Original record drawings are forwarded to the activity only if the activity is capable of storing them in the manner prescribed by the records manuals; otherwise, they are sent to the Federal Records Center for permanent storage.

C. Prepares routine correspondence to various activities, headquarters commands, architect/engineering firms, etc., requesting and/or forwarding drawings, specifications and microfilm as required.

D. Conducts extensive research to locate misplaced files, to provide or compile other types of data that may be required by personnel of the Design Division or personnel from other components of this EFD. Often only a meager description of the information is available, or data desired may require extensive research of various sources to compile complete information. This function requires that the incumbent have a thorough knowledge of the files of this area, and also have a knowledge of the flow of the work and files maintained by other components of the Design Division.

E. Screens files of standard and definitive plans, program cost estimate criteria, maps, specifications and computations to keep files current. This involved tile determination of the disposition of each file for the administration of an effective records control and disposal program.

F. Checks out and keeps an accurate record of tracings, microfilms, and technical records on loan to other personnel in the organization.

III. CONTROLS OVER THE WORK

The immediate supervisor of this position is the Supervisor of the Mail and Files Section. Instructions are very general and refer usually to assignments for the day, such as to file newly received sets of contract drawings, identify and forward the bid microfilm to NFECHQ, follow up on reproduction/microfilming requisitions, etc. Detailed and specific instructions are limited to new duties, such as setting up a new file for program cost estimates, or changes in procedures or policy. The NAVFAC Contract Administration Manual; SECNAV Manual "Disposal of

Navy and Marine Corps Records". NAVFAC DM-6, NAVFAC P95 "Civil Works Contract Administration Manual"; and NAVFAC P-l27 are some of the guides used in classifying, filing, and processing contract plans, record reports and as-built drawings. Completed correspondence is reviewed in the final format for adequacy.

IV. QUALIFICATION REQUIREMENTS

The position requires a thorough knowledge of the filing system in this technical files area; familiarity with engineering terminology; and know how to classify and identify the various types of plans, drawings, and other technical material handled in the Branch. Must have a general knowledge of the functions of the various components of this and their relation to NAVFAC HQ and other Naval activities in the Districts as related to recording of contract plans, specifications, etc. This position requires a knowledge of ozalid printing and reproduction methods in order to advise those who require the services, what type of reproductions can best be made from the material provided for copy.

Fire Prevention Engineer
GS-804-13,12

I. INTRODUCTION

Serves as a Fire Prevention Engineer in the Fire Prevention Engineering Branch of the Design Division. This Branch is responsible for technical adequacy of fire protection functions, fire protection surveys, inspections and investigations. Duties involve consultation and engineering reviews, specials inspections and investigations, field surveys and related engineering duties.

II. NAVFAC DUTIES AND RESPONSIBILITIES

1. Reviews plans, specifications, contractors shop drawings, catalog cuts, and special projects prepared by the Design Division, by Architect and Engineering firms doing work for the Navy, and by activities to assure that fire protection and life safety features therein are in accordance with sound engineering practices, determines that fire protection engineering requirements or new and alteration or modification projects are included in the design, advises the design group, whether in-house or outside A-E's, on the fire protection engineering features, analyzes functional requirements in relation to fire protection, design special fire protection systems. During the construction period, reviews and approves shop drawings and wiring diagrams for adequacy, insures that equipment and devices are to be installed meet with contract specifications and standard requirements, conducts contract completion inspections and tests for all fire protection equipment installations, and recommend acceptance or changes required to the OICC/ROICC.

2. Conducts fire protection engineering surveys and inspections, of existing building, piers, structures, equipment, water supplies, electrical service at all Naval Activities, including Industrial Reserve Plants, and Marine Corps Activities when requested by higher authority, prepared written reports of deficiencies noted and recommends corrective action. Makes special engineering investigations, studies and reports as assigned by higher authority.

3. In conjunction with the appropriate District Fire Marshal, conducts the engineering phase of the investigation of all major fires and related disasters in this area of responsibility, prepares a comprehensive report for Chief of Naval Material, and as required, appears before courts of inquiry and/or boards of investigation convened as a result of major fires and testifies regarding fire protection aspects and losses. May also serve as technical advisor or consultant to boards of investigation.

4. Performs other related duties such as development of fire protection and fire prevention programs at various field activities, conducts training programs for personnel responsible for fire prevention inspections of field activities and acts as a consultant to commanding officers, Public Works officers, Resident Officers in Charge of Construction and other offices and commands as required on fire protection matters.

III. CONTROLS OVER THE POSITION

1. Serves under the general technical and administrative supervision of the head of the Fire Protection Engineering Branch. Receives work assignments from the branch head with a statement as to the scope of a particular project, time schedule, cost limitations and overall objectives to be achieved. Special assignments are made verbally and are usually augmented with supporting documents and appropriate engineering data. Other assignments are received in the form of memos, requests for information and reports which require appropriate engineering actions.

2. Completed work on in-house design projects is reviewed for overall conformance to established objectives and sound engineering practices. Technical adequacy is reviewed from an overall viewpoint and not in detail. Work in relationship to A-E contracts is uniformly reviewed on an occasional basis for uniformity of instructions etc.

IV. QUALIFICATION REQUIREMENTS OF THE WORK

1. Completion of a required course of studies in an accredited college or university leading to a bachelor's degree in fire protection, civil, electrical, hydraulic or mechanical engineering or comparable engineering training is required. professional registration in one of the states is also desirable.

2. Professional experience of a progressively more difficult nature in fire protection engineering design, practices and procedures which has demonstrated a thorough knowledge of all phases of fire protection engineering is required. Additionally, an understand of Architecture and various Engineering fields, including Structural, Civil, Hydraulic, Sanitary, Electrical, Mechanical, and Chemical is essential for successful performance.

3. The ability to direct and coordinate important engineering activities; to solve complex engineering problems, and to communicate both orally and in writing are also needed.

General Engineer, Supervisor
GS-801-14

I. INTRODUCTION

This position is that of Director, Design Division, OICC _____. Functions involved are project planning and engineering design covering a wide variety of projects, including major airfields; roads; ammunition storage; training centers; all types of administrative, operational and housing facilities; supply depots; company command posts; hospitals; waterfront improvements; POL systems; electrical power generation1 water, sewer and electrical distribution systems; etc.

II. MAJOR DUTIES AND RESPONSIBILITIES

A. Plans and directs technical programming functions, which include: Preparation of feasibility studies, surveys of existing facilities, site evaluations, master planning, preparation of program estimates, and development of staff studies.

B. Authorizes and directs preparation of design criteria, preliminary engineering reports and cost estimates by subordinate engineers.

C. Directs the continuous evaluation of local A&E professional capability; participates in A&E contractor selection for lump-sum design contracts; directs the preparation of scopes of work and Government A&E design fee estimates; responsible for negotiations of lump-sum design contracts.

D. Responsible for and provides technical direction and guidance in the administration of all OICC design contracts. This includes day-to-day liaison and direction of the A&E, and review and recommendation for OICC approval of all plans and specifications. Approves all preliminary and final estimates.

E. Determines the priority of assignments for Design Division staff and A&E design work, taking into consideration priorities established by higher authority, production capability of OICC and A&E staffs, and time required to construct the facility.

F. Directs subordinates in the review and approval of construction contract shop drawings. Maintains active liaison with the Construction Division to provide technical guidance as required in the construction and to improve future designs based on facilities being constructed.

G. Plans, develops and directs training programs for local national service personnel assigned to the OICC Design Division. Assures that the program includes on-the-job training in design methods, procedures, and techniques in the

preparation and/or review of the working drawings, and evaluation of construction methods.

H. Participates as final design authority for the OICC at conferences with Construction Division personnel, NAVFAC consultants, and A&E contractor's staff to resolve features of architectural and engineering design which will affect the cost, ease of construction, functional acceptability, and life of the installation. Such features will include: determinations as to types and quality of construction; functional arrangement within structures; coordination of designs with actual site conditions; and provision for day-today construction problems, such as material and labor availability and transportation difficulties, which are constantly arising in connection with construction in foreign areas.

I. Supervises approximately 25 subordinate professional and quasi-professional engineers and clerical positions. Plans and directs all assignments. Review of Branch Managers' work is solely for adequacy of final product and for compliance with established schedules.

III. CONTROLS OVER THE POSITION

This position is under the administrative guidance of the Deputy OICC for Operations (a military officer). Controversial and/or complex problems arising from the type of work accomplished for the military will be handled jointly by the DOICC for Operations and the incumbent. In cases of this nature the incumbent will provide specialized engineering counseling, advice, and guidance. Supervision in the form of desired program objectives, policy interpretation, and application will also be provided by the DOICC for Operations or higher NAVFACENGCOM authority. The incumbent's work will be reviewed in the light of adequacy and sufficiency of accomplishment and conformance to overall program requirements.

Guides governing the incumbent's work include NAVFAC criteria, Federal Government specifications, manufacturer's equipment specifications and various professional engineering technical publications. Due to the type of construction accomplished in the geographic area of responsibility, a considerable amount of interpretation and innovation is necessary in applying sound engineering principles, theories and practices to design, plans and specifications work.

General Engineer
GS-801-13

I. INTRODUCTION

This position is that of the Assistant for Design Management (Code 04A) in the Design Division. The position provides continuity to the functions and tasks assigned to the Director for accomplishment within the Division and acts for the Director during his many periods of required absence from the divisional scene

II. MAJOR DUTIES AND RESPONSIBILITIES

A. Administers and directs a wide range of activities relating to the management of design within the division. This range covers manpower and staffing criteria application and development, measurement of performance vs. objectives, design control systems, cost effectiveness studies, quality control, personnel career program management, progress control and related areas. In these management activities the incumbent and staff under his supervision engage in analysis of past, future, and current workloads, develop policy and operational methods and procedures when applicable, evaluate performance against program objectives and develop and make recommendations for program changes at local and higher levels. Serves also as focal point for carrying out new or revised management programs, coordinating necessary actions in all branches of the Design Division and tie-ins with other components of the branch as required.

B. Administers NAVFAC Engineering Investigation Program, including implementation of policy, solicitation of project proposals, analysis and evaluation of submitted project proposals and development of priority lists.

C. Participates on a continuing basis in planning and management of operations within the Design Division and in knowledge of project status and progress. In his role as successor to the Design Director during all absences, he must be conversant with all potential problem areas and prepared to make commitments for the organization.

III. CONTROLS OVER THE POSITION

Supervisor is the Director, Design Division, GS-15. Incumbent participates with Director in a partnership with special emphasis on management techniques and evaluation systems and programs. Recommendations of the incumbent are generally accepted as presented but involve discussions concerning scope and impact on local and other operations.

IV. QUALIFICATION REQUIREMENTS OF THE WORK

The position requires incumbent to be a registered professional engineer. Also, the position requires a broad knowledge of various engineering fields. Incumbent must supply the initiative without specific directions in pursuit and accomplishment of design work. The broad policies governing his operations present no ready solution to the many problems which arise. The available guides do not treat with such problems as material and staff shortages or methods for short cutting typical engineering approaches in the interest of meeting deadlines. Engineering problems which he must solve require use of originality and approach similar to that represented by engineering determinations in the development of original design concepts. Urgent deadlines require expedient manipulations to determine the best course of action. Experience and judgment combined with the best in design engineering qualifications provide the only sources for combating these issues.

The successful performance of the duties of this position requires (1) the practical application of basic scientific principles, particularly those of higher mathematics and physical and engineering sciences; (2) an intimate knowledge of the fundamental engineering concepts and terminology, the units of measurement, and their inter-relationship common to all branches of engineering; (3) a thorough understanding of engineering techniques and methods such as can be gained through four years of engineering training in a recognized college or university; or training equivalent in type, scope and thoroughness.

This position is CRITICAL-SENSITIVE and requires a security clearance up to and including SECRET. Completion of a satisfactory BACKGROUND INVESTIGATION is required.

General Engineer
GS-0080l-12

I. INTRODUCTION

This position is that of General Engineer, Program Management Division, Officer in Charge of Construction. In this branch is centered the compilation of data required for control, analysis and reporting of OICC construction programs.

II. MAJOR DUTIES AND RESPONSIBILITIES

The incumbent is responsible for the management of the construction projects within an assigned area of the sponsor's construction program. The area assigned may have geographic or functional boundaries. In this position the incumbent performs the following duties:

a. Obtains the sponsor construction requirements and reviews with sponsor in conferences or by field investigation.

b. Determines the availability and capability of contractors to perform the work and method of accomplishment, (CPAF or Lump Sum contract).

c. Programs projects for budget and cost estimates, design, sponsor review, award, construction, and completion.

d. Authorizes; the use of funds for design and construction and insures that expenditures remain within programmed limits.

e. Reviews design plans to insure general technical adequacy to meet sponsor requirements and that scope limitations have not been exceeded.

f. Reviews field reports; coordinates OICC office personnel in support of field personnel; determines if change orders are within scope of work or require sponsor confirmation; and keeps sponsors fully informed of construction progress and problems.

g. Coordinates with appropriate agencies to insure that government furnished material and transportation is made available as required.

h. Follows the progress of projects during construction through completion and returns unused funds to the sponsor.

i. Keeps complete, accurate and current records and summaries of all transactions and correspondence.

j. Takes the initiative to prosecute and coordinate his projects in an independent manner.

III. CONTROLS OVER THE POSITION

Immediate supervisor is the Senior Program Coordinator. Supervision is of a policy nature. General areas of responsibility are outlined, but individual initiative is required in developing, directing, and executing the overall program under his jurisdiction.

IV. QUALIFICATION REQUIREMENTS OF THE WORK

The incumbent must be a fully qualified professional engineer with a combination of engineering and financial management experience. He must have experience in directing and coordinating work assignments of others and be able to express himself clearly in both written and oral communication.

General Engineer
GS-801-12

I. INTRODUCTION

This position is located in the Program Management Office, which is responsible for all aspects of the sponsor's contract construction program involving scope of work, criteria definition, funding, programming design and construction, and active follow-up and coordination when projects are in the field for construction.

II. MAJOR DUTIES AND RESPONSIBILITIES

The incumbent has full responsibility and authority for the management of the construction projects within his assigned area of responsibility for the sponsor's construction program. The area of responsibility demands a close involvement in each project from initiation and design through construction completion. In this position the incumbent performs the following duties:

1. Obtains the sponsor construction requirements and reviews with sponsor in conferences or by field investigation.

2. Determines the availability and capability of contractors to perform the work and method of accomplishment. (CPAF or Lump Sum contract)

3. Programs projects for budget and cost estimates, design, sponsor review, award, construction, and completion.

4. Authorizes the use of funds for design and construction and insures that expenditures remain within programmed limits.

5. Reviews design plans to insure general technical adequacy to meet sponsor requirements and that scope limitations have not been exceeded.

6. Reviews field reports; coordinates OICC office personnel in support of field personnel; determines if change orders are within scope of work or require sponsor confirmation; and keeps sponsors fully informed of construction progress and problems.

7. Coordinates with appropriate agencies to insure that government furnished material and transportation is made available as required.

8. Follows the progress of projects during construction through completion and returns unused funds to the

sponsor.

9. Keeps complete, accurate and current records and summaries of all transactions and correspondence.

10. Takes the initiative to prosecute and coordinate his projects in an independent manner.

III. CONTROLS OVER THE POSITION

The incumbent works directly under the general supervision of the Sponsor Program Manager. Direction is general, rather than specific, and takes the form of broad policies, guidelines and objectives from which the incumbent will operate. The incumbent is expected to control his projects in an independent manner. His suggestions in matters of normal engineering practice are considered authoritative. The work will be reviewed in terms of adequacy of the projects to suit the sponsor requirements, the ability of the incumbent to follow programmed schedules, take initiative, and to represent the OICC in a favorable manner to the sponsors.

IV. QUALIFICATION REQUIREMENTS OF THE WORK

The position requires the incumbent to have sound knowledge of general engineering and the construction industry, including some field experience, and the ability to make sound decisions coordinating funds, resources, and people. He should have a working knowledge of construction programming tools such as Critical Path Method. In order to plan, organize, and direct numerous projects at the same time, he must possess a high degree of initiative and self discipline in orderliness. He must have the ability to lead conferences, give briefings and to clearly express himself in both written and oral communication. He must possess the ability to work effectively with others.

General Engineer
GS-801-12/11

I. INTRODUCTION

This position is located in the Program Management Office, which is responsible for providing short and long-range planning for overall programs involving funds availability, workload for contractor forces, program execution, and allocations of construction resources for optimal construction program management.

II. MAJOR DUTIES AND RESPONSIBILITIES

Incumbent will serve as a staff engineer in the Program Management project Office for Sponsor Facilities. In this capacity, incumbent will assist the senior civilian engineer in the office in the development and/or coordination over a broad range of facilities engineering activities covering a variety of complex facilities to be constructed for the sponsor. Because of the geographic dispersal of the facilities, number of contractors and controlling organizations, the incumbent must be conversant with and apply a variety of statutory, regulatory, funding and procedural controls in his assigned areas of engineering management.

1. Coordinates the program for planning, designing, and constructing facilities for those projects assigned. These facilities will support a considerable variety of activities, and will range from administration, barracks, and service facilities to hospitals, airfields and family housing with appurtenant community facilities. Is responsible for resolving problems in his assigned areas arising from mission changes affecting the use requirements of facilities during construction.

2. Coordinates engineering and other technical and administrative matters between ROICC's and higher levels in the organization.

3. Reviews design plans and layouts prior to start of construction, for adequacy and harmony with overall, long-range facilities plans.

4. Provides guidance and information to, and obtains the cooperation of officials of the Army, in matters concerning his assigned projects and/or facilities; a variety of Contract representatives, local governmental officials and representatives, that have jurisdiction over economic planning, land use, utilities operation and services in areas where facilities are located, and with many contractor and in-house personnel engaged in planning, designing, constructing and supplying materials for the facilities.

5. Initiates action (project directives, correspondence, reports, conferences, meetings and the like) on all matters pertaining to his area of assignment. Discusses with supervisor actions or clearances that may be of a controversial nature or that represent a new approach or course for the office. Initiates and coordinates measures to resolve major problems, in order to obtain scheduled progress.

III. CONTROLS OVER THE POSITION

The incumbent of this position will work under the general supervision of the senior civilian and engineer who will provide orientation to the office, make work assignments, discuss program objectives, policies and procedures. Within these broad guidelines incumbent will be expected to make technical decisions, to plan and organize his workload, consider and coordinate the many elements relating to budget and funds requirements and availability of engineering resources. He will be expected to search out and develop new or greatly modified methods and approaches to accomplish assigned program objectives and to recognize the need to obtain supervisory guidance or clearance on actions that may be of a controversial nature or require policy decisions. The incumbent's recommendations for actions in matters of normal engineering practice are considered authoritative. Work will be reviewed in terms of accomplishment and achievement of productive results, soundness and adequacy of engineering determinations and recommendations.

IV. QUALIFICATION REQUIREMENTS OF THE WORK

In addition to the Federal Services Qualification Requirements (X-118) the incumbent must be conversant with and be able to apply a variety of statutory, regulatory, funding, and procedural controls in facilities engineering management. He must have a good knowledge of the Dept. of Navy and command structure, a thorough knowledge of NAVFAC policies and procedures as they apply to OICC programs. He must have the ability to work effectively with others (including foreign nationals); the ability to express himself clearly and concisely, orally and in writing; to present briefings to higher echelons of command and contractor representatives and/or to effectively handle conferences and meetings. He must have the background, experience, and initiative necessary to develop procedures, systems and to effectively implement them. He must be a "self-starter" capable of working under extreme pressure and in hazardous areas for various periods of time.

General Engineer
GS-801-12

I. INTRODUCTION

This position is that of Sponsor Program Manager, Program Management Office. In this office is centered the compilation of data required for control, analysis and reporting of DOICC/SEA, Vietnam, construction programs.

II. MAJOR DUTIES AND RESPONSIBILITIES

A. General

Program Status Reporting. Effects liaison within the DOICC/SEA, Vietnam, and with outside activities to manage a comprehensive reporting system reflecting the status of programs assigned to DOICC/SEA, Vietnam. Establishes internal procedures for compilation of planning, design and construction data. Summarizes and publishes data in construction program status reports. Provides timely information to sponsors for use in operational planning associated with facilities under construction.

Engineering Management. The incumbent acts as staff consultant in matters regarding program management. Develops and implements program management systems. Prepares and coordinates comprehensive management studies on cost trends, obligation rates, manpower utilization, cost reduction, etc. Determines future work input and maintains construction backlog data on a continuing basis.

Program Coordination. Provides back-up for Program Coordinators by maintaining a close working relationship and general knowledge of all DOICC/SEA, Vietnam, programs.

Planning and Preliminary Engineering. Coordinates preparation of programming documents for various sponsors. Analysis planning documents for compatibility with existing and planned facilities. Compiles site plans, definitive drawings, cost estimates, and project technical analysis into program package for submission by sponsor to higher authority for approval and funding.

B. Supervision of Others. Supervises Program Analyst (GS-7) and Clerk (VGS-4).

III. CONTROLS OVER THE POSITION

Immediate supervisor is the Senior Program Coordinator. Review is of a policy nature. General areas of responsibility are outlined, but individual initiative is required in developing, directing and executing the overall program under his jurisdiction.

IV. QUALIFICATION REQUIREMENTS OF THE WORK

The incumbent must possess a combination of engineering and financial management education and experience. He must use engineering judgment to collect, analyze and present data. He must be intimately familiar with design and construction methods and with construction programming procedures. The position requires research into and assimilation of a vast amount of technical and financial data. A security clearance of SECRET is required.

General Engineer
GS-801-12

I. INTRODUCTION

This position is located in the Assistant for Design Management, Design Division. The incumbent provides a staff service for analysis and evaluation of Design Division operations and management programs and methods.

II. MAJOR DUTIES AND RESPONSIBILITIES

A. Develops proposed Design Division work schedules to the individual job level-considering individual discipline requirements, man-hour availability, and desired completion dates.

B. Prepares data for refined staffing criteria arid workload indicators for engineering and design functions in consonance with NAVFAC Program III/WC 04 staffing criteria.

C. Assembles and prepares data necessary for evaluating and insuring technical adequacy and qualify for PCE and final design programs, other program support; and calculates man-year/resources requirements for the annual and five-year budget for the Design Division.

D. Functions for the Division's technician in the development and analysis of statistics for indicating trends, revealing effectiveness of work operations, accuracy of cost and man-hours estimates, adherence to detail budgetary requirements, and for pin-pointing trouble areas which require expediting actions to insure quality, economical, architecture, engineering and design. Alerts management personnel to deviations in project completions or cost schedules, actual or potential.

E. Analyze current and/or projected operating procedures to evaluate their actual or potential effectiveness in achieving objectives.

F. Develop new programs for scheduling, reporting, and analyzing Design Division operations to provide management with the evaluative material required for effective direction of the Division.

G. Identify actual or potential problem areas, trends, significant accomplishment areas, of imbalance or other similar factors and develops recommendations for change or corrective action.

H. Conducts studies and surveys involving the general operations of the Design Division and its relationship with other components to improve working conditions, identify costly or unwieldy work-flow procedures, or improve utilization of manpower and funds. Surveys include functional assignments, organization structure, work flow procedures, procedures, analysis, space utilization, etc.

I. Reconciles discrepancies in statistical information between Design Division and other components, cognizant and other recording agencies and offices, and recommends necessary measures to preclude future discrepancies.

J. Accomplishes special projects as assigned, such as a special program analysis involving one or more other components or area offices of the EFD.

K. Administers the NAVFAC Professionalism Program, maintains files, compiles records and statistical data, and prepares directives in support of the design director in his capacity as EFD focal point for professionalism.

L. Prepares and assembles input data for the Management Information Center to display progress of Program III/WC 04 toward meeting program/functional objectives.

III. CONTROLS OVER THE POSITION

The incumbent is under the general supervision of a General Engineer, GS-13. Methods of program accomplishment for which he is responsible are left to his own judgment. Finished work is reviewed by supervisor for policy and technical adequacy. Technical, engineering determinations necessary to the initial establishment of program schedules and priorities will be made by the supervisor, but the follow-up and expediting of project priorities, once established, will be fully delegated to the incumbent. Assistance will be confined primarily to those matters in which professional engineering determinations are essential.

IV. QUALIFICATION REQUIREMENTS FOR THE WORK

Requires a comprehensive knowledge of the nature of Design Division support to all IPMS Programs, the inter-relationship between such programs, and the relationship between Design Division functions and those of other Divisions.

Continuing study and originality of thought are essential for development of the various phases of this position, as well as the ability to weigh facts impartially.

The incumbent must be capable of analytical analysis, reducing a management problem to a mathematical base, drafting local directives letters, etc., and must have a facility of language and expression. Must have a knowledge of Navy organization, procedures, rules, and regulations, an understanding of the EFD mission, organization and functions. Must have an extensive understanding of acceptable office methods and procedures. Be able to make decisions which are in line with established regulations and policies. Have a friendly personality and exercise tact and diplomacy as he must present ideas and proposals to management, and make investigative contacts amicable at lower levels.

General Engineer
GS-801-12

I. INTRODUCTION

This position, located in the Design Division, Value Engineering, is a systematic critical review and appraisal of drawings and specifications with particular attention to high cost and/or repetitive-type projects which results in the accomplishment of the desired function at a reduced cost and without an adverse effect on the technical adequacy or quality of the final product. Value Engineering reviews plans and specifications, promotion of Value Engineering consciousness among Division personnel, performance of pertinent special studies, and management of contractor participation phase of the Value Engineering program. The purpose of this position is to plan, implement, and otherwise administer the Value Engineering program of the Division with full program responsibility for the Value Engineering effort including the selection of Value Engineering projects.

II. DUTIES AND RESPONSIBILITIES

Selection of Value Engineering Projects. Reviews Preliminary Cost Estimates, project design drawings, and specifications to select areas of high cost where possible value improvement is indicated. Establishes contacts with other cognizant engineers, analyzes Bureau information notices, and technical publications to uncover potential applications for V.E. In highly technical areas, such as electrical or soils, works with specialists to promote use of V.E. techniques to potentially promising areas. Works with outside architect-engineers, contractors, cost estimators, and other sources of technical information to uncover potential areas where dollar savings may be realized. Based on these procedures, areas for detailed value engineering studies are selected.

Value Engineering Reviews and Studies. Performs a complete detailed review of plans and specifications on selected projects to determine Value Engineering changes that can be made. When the work load or scope of the study warrants, heads a team of specialists in the major engineering disciplines involved. Gathers information relative to cost, estimates, materials, and methods in use; sources of supply, applicable drawings and specifications, etc., visiting the work site as necessary to gather information and discuss possible changes with contractor personnel. Explores and develops possible changes in design; fabrication, assembly, installation, or construction methods; and use of new materials. Validates findings so far as possible, through comparison with practices in private industry, results of current or recent research and development projects, and by applying the principles of engineering

to premises, assumptions, and conclusions. Explains nature of proposed changes with project engineers, comparing as necessary the cost and technical considerations involved in alternate methods to convince the engineer concerned of the soundness of his recommendations. Compiles reports of findings with recommendations for changes to provide a facility, system, or piece of equipment of equal operating capability, quality, and functional adequacy at lower cost. Prepares cost reduction reports for audit on all approved value engineering changes. Works with personnel from the Navy Area Audit Office for the purpose of supporting and verifying Cost Reduction Program reports. Provides technical information, specific cost data, and documentation, as requested, so that reports will be approved. The characteristic projects on which the value engineering reviews and studies are made typically consist of many complete blocks of work and contain a great many complex features.

Managing Contractor Participation Phase of V.E. Program. Reviews all major construction projects prior to advertising and determines which projects are suitable for including the "Value Engineering Inventive Clause" in the project specifications. This "V.E. Clause[1]' enables the contractor to utilize his own V.E. techniques and submit change proposals. Technically reviews the change proposals submitted by the contractor and makes recommendations for acceptance or rejection. Submits reports to NAVFAC as to the disposition of all "Value Engineering Change Proposals." Explains the intention of, and answers questions concerning, the V.E. Inventive Clause during the preconstruction conference of these projects that have been selected and approved for the Value Engineering Incentive Clause. In addition, reviews Bureau monthly report of VECPs to determine areas where indicated savings could be applied to BFD's program.

Value Engineering Reports. Develops and submits reports of value engineering to NAVFAC. After evaluation pertinent field reports are disseminated to other field offices to generate additional savings in all areas.

Training Programs. Conducts a Value Engineering training program to promote the thorough understanding and appreciation of Value Engineering program among engineering and management personnel. Plans and leads seminars and briefings to indoctrinate personnel concerned in the techniques and objectives of value engineering. Represents the Division at seminars and training programs to improve the program.

New Materials and Methods Program. Participates in NAVFAC New Materials and Methods Program by studying pertinent literature and preparing reports on any new materials, methods, or unique uses of conventional materials. Recommends changes in materials and methods of construction in type and guide specifications, projects drawings and specifications, and preliminary cost estimates. Recommends materials and methods of construction for study and evaluation under the Bureau's Research, Development, Test and Evaluation Program; Federal Construction Council; Tri-Service; and non-Government research organizations. Meets with manufacturers' representatives, contractors, architect-engineer organization personnel and Government engineers and architects in order to keep abreast of development in the field of new materials and methods of construction. Arranges meetings with interested engineers and visitors to exchange pertinent information. When requested by management, provides technical consultation services on Value Engineering technique and new materials and methods of construction to personnel of the organization.

III. CONTROLS OVER WORK

Working under the general supervision of the Director, Design Division, receives assignments of special projects verbally with the overall objectives indicated. Performs day-to-day work independently. Receives statements of Policy, technical data, pertinent literature, etc., from NAVFAC level Value Engineering personnel who also conduct Program reviews and evaluations of the local programs. Contacts NAVFAC as necessary and consults the engineer of various Specifications. Guidelines used are various engineering specifications, standard texts, and reference manuals.

IV. QUALIFICATION REQUIREMENTS OF THE WORK

This position requires a knowledge of engineering principles and theory of the type, scope, and thoroughness typically acquired through completion of a four-year course of engineering study in an accredited college or university, leading to a bachelor's degree of civil, architectural engineering or related; preferably with a current registration as a professional engineer; several years of professionally responsible work in a phase or phases of engineering that required contact and cooperation with other professional engineers; and administrative responsibilities. The application of initiative and original thinking to engineering problems is necessary and some first-hand experience in analyzing and developing specifications and cost estimates, materials and construction methods.

General Engineer supervisory
(Specs & Estimates)
GS-801-13

I. INTRODUCTION

This position is that of Manager, Specifications and Estimates Branch, Design Division, OICC, _____. Major projects under the cognizance of the OICC are constructed at a variety of locations within the geographic area, and will include a wide variety of civil/public works facilities.

II. MAJOR DUTIES AND RESPONSIBILITIES

A. Preparation of Specifications

1. Plans, supervises and provides the criteria for the preparation of specifications by the A&E contractors covering all types of construction projects under the control of the OICC. Specifications must be written in such a manner that they will be readily understood by local, U.S. and foreign contractors, Prepares specifications for all work designed by the Design Division staff. All specifications must be adapted to local conditions giving consideration to locally available materials, construction practices and customs of the country/countries wherein the construction is to be performed.

2. Prepares and supervises the preparation of specifications and contract packages for contracts administered by local governmental agencies, as appropriate. Contract packages are in both the English and local languages, and follow local government contracting procedures, which may differ considerably from the U.S. Navy format.

3. Prepares specifications for local government Account Agreements. These specifications are specially written for the accomplishment of work by the various construction components of the local government. Each specification must reflect the construction potential available at any given military post. The incumbent must investigate, evaluate and incorporate local construction practice, potential and labor resources in the construction program for each area. This prevents a general standardization of the specifications because the various areas may be vastly different. The correlation of U.S. standards with local standards requires considerable care due to translation and language difficulties in order that there is a minimum of misunderstanding.

B. Preparation of Cost Estimates

1. The incumbent is responsible for the preparation and supervision of all estimates covering the construction of OICC,_____ projects. This includes the complete review and correction of preliminary estimates and final estimates

prepared by the A&E contractors. In addition to the A&E estimates, the incumbent prepares all OICC planning estimates, change-order estimates, and pre-bid estimates.

2. Tabulates for future use all statistics regarding construction costs, methods, availability and potential for each area and for each method of accomplishment. The incumbent shall make evaluations and recommendations for the incorporation of new methods or machinery in the construction program and should be familiar with the required plan equipment for the manufacture of concrete, asphaltic concrete, bricks and other construction materials.

C. Other Duties

1. Represents the Design Division in construction contract negotiations. Reviews bids submitted by interested contractors in detail in order to determine adherence to project specifications and evaluates differences between the various proposals and the OICC estimates. When an agreement cannot be reached, the incumbent shall determine why and recommend a course of action to the negotiation board.

2. Provides OICC liaison with the construction contractors on all pre-bid matters for all construction contracts. This includes the interpretation of the specifications and explaining them to contractors of various nationalities.

3. Trains local civilian and military personnel in the work required to produce specifications and estimates of construction projects.

4. Performs technical research and prepares reports concerning the use of alternate construction methods. In making these studies, the incumbent must work closely with local officials of various branches of the local government and incorporate their views when possible in the work.

5. Supervises a staff of subordinate engineers/architects, including at least three in number.

III. CONTROLS OVER THE POSITION

The supervisor of this position is the Director, Design Division, who will assign projects, provide broad, general instruction as to goals to be achieved and results to be accomplished. The prosecution of the assigned work will be undertaken independently by the incumbent, who will have primary responsibility for the accuracy of his completed projects. Finished work will be reviewed from the standpoint of accomplishment of objectives and conformance to established policies and procedures.

General Engineer (Specs & Estimates),
GS-801-12

I. INTRODUCTION

This position is located in the Specifications and Estimates Branch, Design Division, OICC, _____ Projects with which this Branch is concerned are constructed at a variety of locations within the geographic area, and will include a wide variety of civil/public works facilities.

II. MAJOR DUTIES AND RESPONSIBILITIES

A. Preparation of Specifications

1. Provides criteria for and reviews specifications prepared by A&E contractors covering assigned construction projects under the control of the OICC. Specifications must be prepared in such a manner that they will be readily understood by local, U.S. and foreign contractors. All specifications must be adapted to local conditions.

2. Prepares assigned specifications and contract packages for contracts administered by local government agencies, as assigned. Contract packages are in English and local languages, and must follow local contracting procedures, which may differ considerably from the U.S. format.

3. As assigned, prepares specifications for local government Account Agreements. These specifications are especially written for accomplishment of work by construction components of the local government, and require investigation, evaluation and incorporation of local construction practice, potential and labor resources by the incumbent for each area involved. The correlation of U.S. standards with local standards requires great care due to translation and language difficulties, to assure a minimum of misunderstanding.

B. Preparation of Cost Estimates

1. Prepares cost estimates covering the construction of assigned OICC, _____ projects. This includes the complete review and correction of preliminary and final estimates prepared by the A&E contractors. In addition, the incumbent prepares designated planning estimates, change-order estimates, and pre-bid estimates.

2. Tabulates for future use statistics regarding construction costs, methods, availability and potential for assigned projects and their respective methods of accomplishment. Recommends to the Branch Head the incorporation of new methods and procedures in the construction program.

III. CONTROLS OVER THE POSITION

The supervisor of this position is the Manager, Specifications and Cost Estimates Branch, who makes work assignments, provides policy guidance, and reviews completed work for obvious accuracy and attainment of goals. The incumbent is expected to accomplish his assigned projects with a high degree of technical independence.

General Engineer
GS-801-12/11

I. INTRODUCTION

Serves as a General Engineer in the Cost Engineering Branch of the Design Division. This branch provides complete cost, engineering services to the Design Division and the entire _____ Makes cost estimates, and guides and instructs others in making estimates, for the construction work under the cognizance of the EFD. These projects include waterfront construction, graving docks, airfields, facility relocations, radar and communication stations, hospitals, shops, hangars, housing for highly technical training equipment, electro-magnetic facilities, instrument repair shops, test and research facilities, with "clean" and "anechoic" rooms, supporting features, and many other complex types.

II. MAJOR DUTIES AND RESPONSIBILITIES

1. Analyzes and correlates bid prices, construction cost records and market trends to provide guide lines for estimates of cost for future work. These records and analyses provide sound bases for estimates at all stages of design from the initial conception of a project to the final "board and brick" take of f from the completed contract drawings. 20%

2. Prepares cost estimates on complete facilities; generally assists others, usually members of other Branches who have some proficiency in estimating, in preparation of estimates on buildings, and reviews this work.

Reviews and prepares estimates for change orders to construction contracts and advises the "Board on Changes" and the Command in negotiating and following a course of action to resolve wide variations between the government prepared cost document and contractor's proposals. Provides re-evaluation studies and recommends acceptance or rejection of bids in unusual cases where the contractor's price exceeds the government estimate. 25%

3. Instructs and assists consulting A&E firms in the preparation of estimates of cost in conformance with the special requirements of NAVFAC, particularly when their work concerns projects in out-of-ordinary locations or for unusual purposes, such as repair and testing laboratories for electronic, communications, and jet engine gear. Aids A&Es with area cost

factors and in evaluating special problems of labor and materials, working from long experience with similar work. When experienced "guess estimates" indicate that an A/E estimate is out-of-line, analyzes it in detail, looking for omitted cost factors, if too low; and for use of over-costly methods and materials if too high. Counsels them in changes of materials and methods to obtain optimum results with available funds. When some A/E firms prove unable to prepare sound estimates, re-does their work to obtain usable results, under the stress resulting from passed completion dates. 25%

4. Prepares, and reviews when prepared by A/Es and stations, preliminary estimates accompanying requests for funding of projects costing up to several million dollars and of every degree of complexity. These projects include such diverse projects as photo laboratories, instrument calibration facilities, piers, and housing. Provides consulting services on costs to the Planning and Utilities Divisions of the EFD on master planning and to other Divisions on special projects, particularly large and unusual ones. These estimates are made in advance of preparation of drawings, but are based on sound engineering principles, or the project will fail of financing because of too great a cost, or because funds prove inadequate when the project is put out for bids. 25%

5. Performs other related duties as assigned. 5%

III. CONTROLS OVER THE POSITION

The incumbent works under the general supervision of the Head, Cost Engineering Branch, Supervisory General Engineer, GS-l3. He receives his assignments in the form of a written "Work Request" which provides a brief description of the location and scope of the work to be performed. The amount of construction money and the number of design hours appropriated for the project are also included. The incumbent is expected to discuss only major problems with his supervisor, suggesting solutions. He is also expected to keep the supervisor informed of the progress of his assigned projects in order to enable him to schedule future workload for the Branch. The supervisor reviews the finished products for mechanical design values, technical adequacy and conformance to agency objective.

In the incumbent's assigned projects, he refers to the Navy Design Manuals, Federal and Military Guide Specifications, American Society of Heating and Air Conditioning Handbook, National Plumbing Code, Mechanical Engineering Handbooks, and manufacturers catalogs.

IV. QUALIFICATION REQUIREMENTS OF THE POSITION

The successful performance of the duties of this position requires (1) the practical application of basic scientific principles, particularly those of higher mathematics and physical and engineering sciences; (2) an intimate knowledge of the fundamental mechanical engineering concepts and terminology, the units of measurement, and their inter-relationship common to all branches of engineering; (3) a thorough understanding of mechanical engineering techniques and methods such as can be gained through four years of engineering training in a recognized college or university; or training equivalent in type, scope and thoroughness.

This position is NONCRITICAL-SENSITIVE and requires a security clearance up to and including SECRET.

General Engineer
GS-80l-12,11

I. INTRODUCTION

This position is located in the Specifications Branch, Design Division, Acquisition Department. The Branch is responsible for the technical adequacy and quality of all specifications functions under Design Division cognizance. The incumbent of this position is responsible for specifications engineering in connection with A&E design and construction projects. The projects regularly include buildings of major importance, many of which involve construction costs of millions of dollars and are of a variety of types, functions, situations, etc. Among the type of buildings involved are hospitals, industrial shops, utilities plants, administrative buildings, messing facilities, barracks, etc.

II. DUTIES AND RESPONSIBILITIES

Prepares preliminary and final project specifications for a great variety of complex construction projects, including waterfront structures, bridges, airfields, fuel storage facilities; various types of buildings such as administrative, shop, training, storage, ballistic missile support and gymnasia; structures such as missile magazines, towers, and utilities. Instructs and guides architect/engineers preparing contract documents under commission from NAVFACENGCOM in the preparation of specifications for all the mentioned classes of projects, and reviews and corrects their work at several stages of completion. Has particular responsibility for civil engineering projects, such as piers, paving and underground utility systems. The basic requirements for NAVFAC specifications are quite different from and more stringent than for ordinary practice, as they must conform exactly to Armed Services Procurement Regulations.

Instructs and guides architect/engineer firms preparing construction drawings and specifications in choice of materials, organization of specifications, completeness and accuracy. Reviews specifications to determine compliance with NAVFAC design criteria and corrects them, as necessary, to secure acceptable work. This guidance includes instruction in philosophy of non-propriety specifications, format, use of guide-line specifications, architect/engineers' responsibility for proper adaptation of guidelines, and review and correction at several stages of the architect/engineers' product. When estimates indicate the construction cost will be in excess of available funds, investigates means of reducing the cost, by changes of materials, omission of non-essential features, preparation of reduced scope bid items, and simplification of details.

Prepares final contract specifications covering all items
of material, equipment, plant and workmanship for construction

projects as required by law, customs and the criteria of the Command.

Reviews and coordinates project specifications and drawings prepared and submitted to the EFD by Station Public Works Offices for completeness, conformity to NAVFAC standards, and technical correctness.

Prepares and revises guideline specifications covering specific items of work in contract specifications. Reviews NAVFAC guide specifications given to Architect/Engineers to the extent required for their adaptation to the various climatic and geographical conditions of areas under the jurisdiction of this EFD.

Guides and advises the members of other branches of the Design Division and members of other divisions in the preparation of specifications, and gives assistance to field offices and Resident Officers in Charge of Construction in matters pertaining to preparation and interpretation of specifications.

Receives questions as to interpretation of drawings and specifications during the bidding period, with particular regard to mistakes, conflicts, and suggestions as to changes which will result in reduction in cost or improvement of function of the end product. Time pressure seldom allows consultation with the Architect/Engineer so the incumbent must study the drawings and specifications, consult with the special branches of the Design Division, and when changes are found to be necessary determine the most practical method of presenting them to the bidders in the form of addenda. The same responsibility pertains to amendments issued after award of contract.

Advises other members of the Specifications Branch on questions of airfield and road paving, marking of airfield pavements, prefabricated metal buildings, water distribution systems, earthwork, and storm drainage.

The recently adopted policy of sharply limiting fees paid to any one Architect/Engineer firm has resulted in a 50 percent increase in the number of architect/engineers who must be instructed, guided and corrected in the preparation of specifications.

Specifications are a part of the contract documents which bind a contractor to perform stipulated work for the Government. By law, specifications govern over drawings except where particularly specified otherwise; therefore, complete and adequate coverage of the work included under the specifications is paramount.

III. CONTROLS OVER THE POSITION

The supervisor is the Supervisory General Engineer, Head of the Specifications Branch, who gives limited supervision during the course of an assignment and exercises limited technical review upon completion assignments. Normally, assignments are made with instructions to take such steps as necessary to prepare projects for advertising for bids and award. The decisions and judgments made in the accomplishment of work assignments are usually checked only in general, and only as they concern matters of policy and administrative procedure for which the Branch Manager has prime responsibility. All work must be in accordance with accepted standards of engineering and architectural practice, and with Command guides, criteria, typical specifications, and building definitives. Standards and guides are applied with knowledge of the particular job conditions and with judgment as to availability of materials and future operating and maintenance costs.

IV. QUALIFICATIONS

Incumbent must have a knowledge of civil, structural, and materials engineering and general knowledge of mechanical and electrical sufficient to develop and/or coordinate the development of complete project specifications. Incumbent must also have knowledge of construction techniques and practices. Must be able to answer quickly and clearly questions concerning design, drawing, and specifications for projects. Requires thoughtful consideration and mature judgment in choice of materials and methods for many building trades. Ability to work with other professional people is essential. Position requires a professional engineer.

Guard Supervisor
GS-085-97

I. INTRODUCTION

This position is located in the Security Branch. This Branch is responsible for the development, planning and execution of the Physical Security System, Circulation Control System, Identification and Ration Card and Privilege Card Systems for the OICC, DIRCONS, ROICC's and contractor organizations. This includes all special type passes needed for different areas. Fingerprinting of employees processed for employment, preparing reports and maintaining files as required by existing policies and regulations. The purpose of this position is to perform the duties of Branch Supervisor responsible for the above functions. Incumbent is Physical Security Officer of Civilian Guards. Is responsible for preparation of all OICC Security instructions, adds or deletes guard post as needed. Responsible for purchasing guard uniforms and other related supplies. Process all incident reports on all OICC military, civilian and contractor personnel. Also required to maintain an Arms Storage room for all OICC personnel, this includes Military and Civilians. Responsible for maintaining, adequate storage, cleaning facilities, requisitioning adequate supplies of ammunition and weapons. Also for arranging and executing training programs that includes range firing of weapons for all assigned personnel. Proper storage and protection of weapons and ammunition. Responsible for the maintenance of proper records on all OICC weapons. Conducts range firing programs for Military and Civilian on a quarterly basis.

II. MAJOR DUTIES AND RESPONSIBILITIES

1. Incumbent is responsible for the Physical Security of all leased buildings and materials at 10 separate locations. He closely monitors the Guard Services Contract, including final approval on hiring and on disciplinary actions. He directs the contractors training programs and his shift operations plan. He is overall administrator of a Force of 84 Guards.

2. Develops, plans and executes procedures applicable with current directives for the issue, storage and destruction of all identification, privilege cards and ration cards for OICC, TAD, NAVFORV and 32 Civilians Contractors. Responsible for the establishment and maintenance of records and files for the same. Incumbent is responsible for maintaining contact and liaison with MACV to insure that all changes to the above are complied with; must know and fully understand all directives applicable to the above.

3. Supervises office personnel who are responsible for the issuance of ID and Ration Cards to all Military and Civilian personnel.

4. As Physical Security Officer makes investigations.

Housing Project Manager
GS-1173-917

I. INTRODUCTION

This position is located in the Housing Section. This position is responsible for providing housing management services for U.S. military and civilian personnel and selected third country nationals, both permanent duty in country and TDY travelers.

II. MAJOR DUTIES AND RESPONSIBILITIES

A. Housing Management Assistant Work

1. Acts as the Housing Project Manager in assigning billets to eligible personnel by following an established priority system based on types of quarters needed for officers, enlisted men, third country nationals and civil service employees.

2. Supervises the Billeting Manager, and is in charge of the Division during the absence of the Housing/Real Estate Officer.

B. Protocol Service

1. A record is maintained of all incoming civil service personnel by name, grade, date of arrival and flight number. The personnel office has to be contacted for place of assignment. A log is then made by date of arrival. This log is reviewed each morning for pick-ups to be made. It is the responsibility of incumbent to call the section supervisor, where the incoming employee is to be assigned. When a sponsor is unable to meet the incoming employee, the incumbent meets the new employee, providing assistance in processing, having a passport signed and stamped, etc. The arrival will then be taken to temporary quarters and instructed where job assignment is located.

C. Inspector Duties

1. Supervises the janitorial contractor, making daily inspections of quarters and office buildings to insure they are clean and provided with necessary supplies. Notes repairs needed and initiates requests for such repairs. Initiates requisitions for necessary janitorial supplies and equipment for billets and offices. Participates in selecting sources of supply and in negotiating price on local purchase items.

D. Property and Equipment Inspection

1. At the time quarters are assigned and terminated the incumbent makes a joint inspection with the tenant to insure

that quarters are clean and that all property is accounted for. Determines what is normal wear and tear or excessive damage to property and takes necessary action to have the government compensated for property where damage has been determined the responsibility of the tenant.

2. At the time of inspection for determination of quarters, it is determined what maintenance work to the property, if any, is necessary and prepares the required paper-work.

E. Inventory Management

1. The incumbent makes a complete physical inventory of all government owned furniture, appliances, and equipment in government leased billets. Each item is assigned an identification number, a condition report is prepared and repairable items are sent out for repair. Non-repairable items are salvaged, when possible; orders are submitted for replacement where needed.

2. When initial inventory is finished a complete set of inventory records is set up and maintained, showing item, cost, and location. Inventories are made and records kept of all landlord owned property. When OICC property is sent in for repair or property is exchanged, records have to reflect these changes.

3. Incumbent obtains and maintains custody receipts when property is issued and property accounts are annotated when property is turned in.

4. The incumbent is responsible for the receipts, delivery and installations of all new items of property, equipment, and supply. Records are maintained to reflect date of issuance, type of issuance, where located and responsible party.

III. CONTROLS OVER THE POSITION

A. The incumbent is supervised by the Administrative Services Officer who provides guidance on difficult problems.

B. Written guides include NAVFAC, COMPACDIV and OICC directives and memorandums.

IV. QUALIFICATION REQUIREMENTS OF THE WORK

The incumbent should have a general knowledge of property accounting procedures and have experience in assessing the condition and repairability of housing property and equipment.

Tact and diplomacy are required in dealing with all levels and ranks of personnel occupying government quarters. Also this job requires working with U.S., third country and local merchants and lessors.

Historian
GS-170-11/12

I. INTRODUCTION

This position is a historian on the staff of the Officer-in-Charge of Construction. The incumbent will collect, evaluate, analyze and present historical facts of the contract.

II. MAJOR DUTIES AND RESPONSIBILITIES

1. Project Planning: The project is to develop a historical compilation of the contract from the time of its inception and negotiation to its current stage. This project also involves all the sub-contracts. Incumbent determines the scope of the project, the breadth and/or depth of historical treatment to be undertaken and determining preliminary approached and techniques to be employed. The project will include all major aspects of planning, programming, funding with special emphasis on the problems involved and the solutions developed.

2. Obtaining and Evaluating Documents: Incumbent will obtain all documents related to the contract from such sources as in-house records and files, from the prime contractor, the sub-contractors, the various A&E firms, and NAVFACENGCOM. It may also involve interviews with individuals having knowledge of the contract.

The incumbent determines the reliability of documents and statements in order to establish its relative value. Incumbent determines what evidence may be accepted as pertinent to the assignment. Based on careful and thorough investigation of source materials supported by complete references provides the historical narrative presentation.

3. Presentations: Incumbent, applying a high degree of skill, organizes the narrative, selects the language needed to present the historical synthesis clearly and concisely and maintains a proper balance and perspective. The historical presentation may include tabular or graphic charts, statistical compilations, chronological summaries, maps, etc.

4. Establishes and maintains continuing working relationships with officials and managers of the OICC, contractors and sub-contractors, NAVFACENGCOM and A&E's in order that he may keep abreast of current policy, planning and operational problems.

III. POSITION CONTROL

Operating under the Deputy OICC, the initial assignment will be expressed in terms of subject areas to be covered and objectives to be served by the study. Within this framework, the incumbent is allowed considerable latitude in setting the perimeters of his assignments. Typically, the review is not related to methodology but rather to the aspects of the subject matter of the work and the effectiveness of the presentation and completeness of coverage.

IV. QUALIFICATION REQUIREMENTS

This position needs a good knowledge of the construction operations and management involved as well as military organization. A knowledge of professional historical research methodology is also required.

Supervisory Inventory Management Specialist
GS-13, 12

I. INTRODUCTION

This position is in the Material Branch, Resources Division, the functions of which are outlined in the OICC RVN Organizational Manual. The incumbent is Director of the Material Management Division and as such provides administrative and technical supervision to personnel engaged in providing policy guidance, technical assistance and program evaluation for the overall Material Management program in support of contract operations.

II. MAJOR DUTIES AND RESPONSIBILITIES

1. Plans, organizes and directs the operations of the Materials Management Division. This includes the development of plans for, and installation of, systems for the efficient operation of the Contractor's Inventory Management System.

2. Responsible for monitoring the Contractor's existing inventory management system to insure that actual or potential problem areas are dealt with in a systematic and effective professional manner.

3. Provides advice and makes authoritative determinations concerning inventory management matter to the director. Resolves unusually difficult problems pertaining to inventory management matters.

4. Conducts systematic appraisal reviews of the CPAF Contractor automated inventory management processes and evaluates adequacy of individual elements in relation to the total system. Coordinates with other AOICC for Material staff members on matters affecting more than one technical supply area, i.e., procurement; transportation; inventory management; cataloging and standardization to insure that total system integrity is preserved and that improvements and major system changes are incorporated with a minimum disruptive affect.

5. Responsible for monitoring the Contractor's Standard Operating Procedures, ADP Reports, Operational Manuals and other similar publications pertaining to the inventory Management Program. Coordinates for OICC in the approval of changes, revisions and/or deletions thereto. Is responsible- for originating AOICC and OICC Procedures as they relate to the inventory management program.

III. CONTROLS OVER THE POSITION

Under the supervision of the Material Officer who delegates to the incumbent a broad range of responsibilities and who provides guidance in the form of broad, general programs or special study objectives. Incumbent exercises a great degree of personal initiative. Incumbent's work will be reviewed on the basis of overall results and organizational attainment of program objectives and goals.

IV. QUALIFICATIONS

A professional level logistics administrative and operational background gained through progressive, broad span experience in Governmental supply and logistic operations is required. Experience should include positions at progressive responsible levels over the supply operations, procurement, inventory management traffic management and ADP system applications to logistics fields, etc. A sound working knowledge of planning and programming and system analysis techniques as they apply to logistics and supply is highly desirable.

Labor Relations Specialist
GS-246-13, 12

I. INTRODUCTION

This position, Special Assistant for Contractor Labor Relations, is assigned to the staff of the Officer in Charge of Construction, _____. The incumbent will serve as advisor on all contractor labor relations involved in any and all types of contracts awarded under any of the construction programs under the cognizance of the OICC.

II. MAJOR DUTIES

A. The incumbent is responsible for implementing and making recommendations concerning the enforcement of contract labor provisions throughout the geographic area under the cognizance of the OICC. Establishes and maintains good working relationship with local and central government labor officials of the host country/countries. Determines by observation and by personal contact with host country labor authorities and officials, local labor regulations and laws applicable to the employment of indigenous and/or foreign labor. This includes selection, promotion, discharge, salary, fringe benefits, etc. Reviews conditions outlined in proposed or approved contracts and makes recommendations of necessary changes which will coincide with regulations and applicable labor practices in the area. Establishes internal procedures to assure contractor compliance with same.

B. Monitors the application of labor laws and regulations, and their administration. Prepares instructions to contractors emphasizing their responsibility regarding labor relations matters and methods to comply with such laws and directives in the most direct and satisfactory manner. Prepares instructions for the OICC, setting forth responsibilities and methods in meeting labor compliance requirements. Maintains continuous contacts with contracting organizations and employee groups to provide advice and guidance regarding the policies, regulations and objectives with regard to labor relations.

C. Encourages and promotes harmonious labor relations between contractors and their employees and aids in the prevention as well as the settlement of all types of labor disputes that occur on projects under the cognizance of the OICC. Reports and develops information concerning incidents, practices, etc., that are causing or might lead to friction and possibly a breakdown of relations between labor and management, and work stoppages. Takes action within the limitations of his authority to rectify the situation or a3sures that necessary action is taken at higher echelons.

D. The incumbent will review and pass upon qualifications of all new U.S. hires for contractor positions consistent with authority delegated to the OICC. Determines adequacy and reasonableness of salaries of U.S. contractor personnel with authority to approve, adjust or deny same to the limit of authority to the OICC. Maintains continuous review of contractor organization charts and staffing to assure both are in the best interest of promoting the program objectives consistent with sound judgment.

E. Serves as Chairman of an exit interview board interviewing all expatriate personnel prior to their departures from place of duty, whether departure is upon completion of their employment agreements, or voluntary/ involuntary termination

F. Incumbent is responsible for establishing, implementing and recommending procedures to insure that contracts utilize an effective timekeeping procedure for all hourly-rated contractor employees.

III. CONTROLS OVER THE POSITION

The incumbent operates under the general supervision of the OICC, _____. The incumbent determines priority of projects, methods of procedure, solutions and sources of information. Most of his work is subject to post review only by oral briefing or review of correspondence files. The primary purpose of the post review is to keep the supervisor informed of current, important developments in the labor relations area. Technical controls consist of the "Armed Services Procurement Regulations" (ASPR); NAVFACENGCOM publications pertaining to contract administration and contractor-labor relations; and pertinent directives from higher authority.

Management Technician
GS-3 44-9/7

I. INTRODUCTION

The incumbent is responsible for the forms control program and reports control program. Also, works individually or as a member of a team performing a variety of fact-finding tasks for establishing new and improved methods or to clarify procedures and systems. Location is in the Central Files Section.

II. MAJOR DUTIES AND RESPONSIBILITIES

Serves as forms management officer and reports control officer with responsibility for implementing applicable phases of the Navy reports control and forms management programs. Conducts cyclical reports and forms management surveys to observe the status of these programs throughout the OICC and to recommend corrective action for deficiencies. Coordinates forms development and control between OICC organizational segments.

A. Conducts the OICC forms management program by reviewing submission of new or revised forms; maintaining a cyclic review of existing forms to insure their continued conformance to regulations and existing requirements; maintaining current forms management records; preparing directives, guides and instructions for the establishment and operation of the program; assisting organizational elements design forms according to Navy standards; evaluate and report forms management accomplishments; cooperate with supply and distribution personnel to prevent the printing of forms under revision or scheduled for cancellation.

B. Administers the OICC reports control program by analyzing all existing or proposed reports as to contribution of information, range of distribution manhours and cost of preparation, required frequency of submission and value to the organization. Maintains a continuing cyclic reports review to justify existing reports, and cancels outmoded reports. Assists all organizational components in establishing or revising their reports requirements.

C. Prepares reports to higher headquarters related to the status of the forms management program. Reviews regulations, notices, instructions and other publications emanating from higher headquarters and determines the effect upon the OICC

programs. Advises OICC elements by means of formal and informal communications of new or revised forms management and reports control requirements imposed by higher headquarters and serves as a source of advice and assistance to operating personnel on all matters pertaining to these areas.

III. CONTROLS OVER THE POSITION

Incumbent works under the general supervision of the Head, Central Files who provides, in broad terms, the objectives to be achieved and policies to be followed. In the day-to-day execution of technical routine the incumbent will have a wide latitude for independent action. Problems of a precedent or unusually difficult nature will be discussed with the supervisor before action is taken. Appraisal of the work will be based upon the incumbents' ability to conduct effective programs in accordance with established policies, procedures, and standards of performance.

IV. QUALIFICATION REQUIREMENTS OF THE WORK

In addition to meeting the Federal Service Qualification Requirements (X-118), the incumbent must be thoroughly familiar with Department of the Navy regulations and policies governing the Reports Control System and of the regulations and policies applicable to forms management and control. He must also have a knowledge of recognized practices, theories, techniques and methodologies of forms control management; established precedents applicable to the assigned programs; basic trends and current developments in forms control management methods and procedures.

The incumbent must have the ability to gather, assemble, correlate and analyze facts and draw conclusions therefrom; and to devise solutions to problems; ability to acquire, quickly, knowledge of the OICC organization, procedures and subject matters encountered in the work assignments. He must have the ability to make oral and written reports and presentations, and prepare graphs and charts, clearly, concisely, and effectively; gain cooperation of and cooperate with others; and to visualize effect of changes recommend; incumbent must be tactful; capable of exercising sound judgment and of working under extreme work pressures.

Materials Engineer
GS-00806-12

I. INTRODUCTION

This position is in the Materials Testing Branch, Construction Division, OICC. Primary concern is to determine suitability of construction methods and materials.

II. MAJOR DUTIES AND RESPONSIBILITIES

A. Evaluates construction methods and tests new construction and maintenance materials for use in that locality. Collects findings for technical reports.

B. Conducts research investigations and studies to determine suitability and adequacy of various materials, equipment and methods used in construction. Research involves field and laboratory tests, analyzing and evaluating research data, and applying research results to solve the engineering problem. Contact with field crews yields information on problems, adequacy of present methods and comments and recommendations on the properties of test materials. Incumbent is responsible for determining methods and procedures for solving problems, reporting conclusions and recommendations.

C. As materials consultant for the area, gives materials recommendations to planning and estimating personnel, especially for use of local construction materials in relation to needs of military and other codes and standards. Laboratory procedures are developed to cover materials and methods applicable to problems which recur.

D. Chemical analyses and studies are conducted on a variety of materials. Acceptance tests for materials are performed. Results are tabulated, reviewed and forwarded to OICC with recommendations concerning use or non-use of materials.

E. Participates in development of plans and specifications to determine best use of materials in terms of transports, economic, and political problems presented by need for switch in use of local vs. imported materials.

III. CONTROLS OVER THE POSITION

A. Supervised by Director, Construction Division. Investigations and research studies are assigned with limited guidance on the scope of work and none on procedures to be employed. Incumbent organizes work, selects methods, supervises and prepares technical reports 6n assigned projects. Supervisor is consulted on complex or controversial

problems involving major policy decisions affecting contractor relations, timing of work progression, local vendor relations, etc.

B. General guides are reference books, technical documents, standard test manuals, plans and specifications. No guides exist for special tests, interpreting results, reports, modifying equipment and procedures, performance records or evaluation studies.

IV. QUALIFICATION REQUIREMENTS OF THE WORK

A through knowledge of engineering principles in the fields of strength of materials, soil mechanics, chemistry, structural analysis and metallurgy, equal to a bachelor's degree in engineering. Four years of materials engineering experience covering testing and evaluation of construction materials.

Mechanical Engineer, Supervisor
GS-830-13

I. INTRODUCTION

The incumbent of this position serves as the Manager, Mechanical Engineering Branch, Design Division, OICC, _____.

II. MAJOR DUTIES AND RESPONSIBILITIES

A. As the OICC engineer responsible for mechanical engineering design, the incumbent personally, or through subordinates, provides assistance and guidance to A&Es, the DOICC for Operations, other staff members, and personnel of participating offices. Projects will involve such activities as developmental and feasibility studies, site surveys and preliminary planning, other general engineering investigations of a mechanical engineering nature, preparation of preliminary and final plans and specifications, and continuous coordination with engineers concerned with other aspects of the installations. Because of the requirement demands, site location and environmental conditions, the work is complicated by many new and unique features.

B. The incumbent is responsible for the review and evaluation of mechanical engineering aspects of A&E feasibility studies, preliminary engineering reports, and final plans and specifications. He is responsible for determining compliance with the sponsor and NAVFAC criteria, and recommends approval, change or modification. Coordinates work with that performed by other OICC staff engineers, and together with these personnel and those of the ROICCs, insures conformance with overall plans and with requirements or recommendations of other offices.

C. Makes field trips, independently or as a member of a team, to construction sites, to associated organizations, or to other locations to secure or to provide information and assistance in regard to functions previously indicated. During visits to the sites, investigates mechanical engineering features. Insures that mechanical systems and components comply with construction contract requirements. Initiates action for changes to plans and specifications required by on-site conditions and develops engineering data to support such changes.

D. Responsible for the preparation and completion of final designs for mechanical features of projects to be used by the contractor for the construction of facilities. Supervises subordinate Branch engineers, technicians, and/or draftsmen in the performance of the above duties.

III. CONTROLS OVER THE POSITION

The incumbent of this position reports to the Director of the Design Division who provides general direction regarding project objectives, priorities, and OICC decisions. Actual operations and details of the work performed are normally not reviewed and little technical advice is provided. The incumbent is expected to plan and accomplish work independently and is held responsible for technical results.

Mechanical Engineer,
GS-830-12

I. INTRODUCTION

This position is located in the Mechanical Branch, Design Division, OICC, _____. This Branch makes engineering studies, performs design work and prepares plans and specifications for project construction, advance plans mechanical features of projects, provides assistance in preparation of technical portions of mechanical contract modifications, examines and modifies, as required, the plans and specifications prepared by A&E firms for construction and advance planning projects. The Branch also provides consulting service to the Construction Division relative to contract requirements, and reviews contractors' shop drawings to insure compliance with contract plans and specifications. The incumbent specializes in mechanical engineering systems and problems involved in the construction work under the cognizance of the OICC.

II. MAJOR DUTIES AND RESPONSIBILITIES

A. The incumbent is responsible for designing mechanical systems and facilities for installations constructed by the OICC, _____. The types of facilities designed include a wide variety of mechanical engineering features peculiar to contingency construction operations in outlying areas.

B. Prior to award of contracts to A&E firms the incumbent prepares mechanical engineering portions of project scopes, as directed. The scope outlines to the A&E the general amount and quality of work to be performed.

C. As directed, conducts or participates in engineering investigations of a mechanical nature. Such investigations include studying mechanical systems and components, recommending basic schemes for expanding or improving systems, and/or solutions to other mechanical engineering problems encountered in the construction process.

D. Assists in the preparation and/or review of preliminary planning reports and Shore Station Development Project Reports prepared by others.

E. Provides professional and technical consultation service on mechanical engineering matters to other staff engineers of the OICC, A&E contractor personnel, ROICC personnel, etc.

(MUCH OF THE WORK DESCRIBED ABOVE REQUIRES PIONEERING IN NEW OR CONTROVERSIAL AREAS, DUE TO UNIQUE SITE LOCATIONS AND ENVIRONMENTAL CONDITIONS INVOLVED.)

II. CONTROLS OVER THE POSITION

The immediate supervisor of this position is the Manager, Mechanical Branch. Contacts with the supervisor are primarily to discuss specific project priorities, status of particular important assignments, certain matters of policy, procedures and objectives. The incumbent's work is expected to reflect the best and most economical engineering design, completeness and accuracy in engineering details, practicality of construction, and compliance with established scope and criteria.

Mechanical Engineer
GS-830-12511

I. INTRODUCTION

This position is Mechanical Estimator, Specifications and Estimating Branch, Design Division. Under direction of the Head of Estimating Section, incumbent will prepare mechanical engineering estimates or review those prepared by A/E contractors for various projects coming under cognizance of the OICC. These include, but are not limited to, airfields, military camps, electrical systems, for hospitals, harbor installations, buildings, warehouses, etc.

II. MAJOR DUTIES AND RESPONSIBILITIES

1. Develops and prepares mechanical estimates for structures, facilities and services concerning the various construction projects and characteristics, both U.S. and local country as well as other factors. Investigates alternate materials and designs in order to reduce cost, increase capability or to enhance the feasibility of the projects. In addition, the incumbent assists in the preparation of all OICC planning estimates and pre-bid estimates. 65%

2. Reviews mechanical estimates prepared by A/E contractor firms. These reviews are made to ensure that the estimates are accurate and complete; are in accordance with the A/E contract requirements and design drawings; and will meet all requirements for award of the anticipated construction contracts. 35%

III. CONTROLS OVER THE POSITION

Work is performed with a minimum amount of supervision from the supervisor who is the Head of Estimates Section. Day-to-day work is accomplished with no supervision. Controversial problems, the solution of which would be in deviation of current policies and/or procedures, will be discussed with the supervisor prior to taking final action. On projects for which no established guidelines are available, the supervisor will discuss the scope of it with the incumbent and may offer suggestions and comments on how it should be accomplished.

Guidance is also received and obtained through standard and technical engineering publications, NAVFAC directives, etc. that pertain to preparing cost estimates. It is necessary that considerable interpretation and deviation be made to adjust to local conditions, practices and materials.

IV. OTHER

The incumbent must be a fully qualified professional mechanical engineer and possess an engineering degree from a fully accredited college or university. Must possess extensive experience in the field of mechanical estimate preparations for heavy construction. Have the ability and initiative to resolve problems of a controversial and complex nature and to deal successfully with personnel of other organizations.

Mechanical Engineer
GS-830-11

I. INTRODUCTION

This position is located in the Mechanical Branch, Design Division, OICC, _____. This Branch makes engineering studies, performs design work and prepares plans and specifications for project construction, advance plans mechanical engineering features of projects, provides assistance in preparation of technical portions of mechanical contract specifications, examines and modifies, as required, the plans and specifications prepared by A&E firms for construction and advance planning projects. The Branch also provides consulting service to the Construction Division relative to contract requirements, and reviews contractors' shop drawings to insure compliance with contract plans and specifications. The incumbent specializes in mechanical engineering systems and problems involved in the construction work under the cognizance of the OICC.

II. MAJOR DUTIES AND RESPONSIBILITIES

A. The incumbent is responsible for designing assigned portions of mechanical engineering projects and facilities for installations constructed by the OICC, _____. Such facilities include a variety of engineering features peculiar to contingency construction operations in outlying areas.

B. Prior to award of contracts to A&E firms, the incumbent prepares assigned mechanical engineering portions of project scopes. Such work is monitored and coordinated by higher grade engineering personnel of the Branch.

C. As assigned, participates with higher grade personnel of the Branch in engineering investigations of a mechanical nature. Such investigations include studying mechanical projects in the field, and recommending basic changes or solutions to problems encountered during the construction process.

D. As assigned, assists in the preparation and/or review of preliminary planning reports and Shore Station Development Project Reports prepared by others. Such work is monitored and coordinated by higher grade engineering personnel of the Branch.

(Much of the work described above requires pioneering in new or controversial areas, due to unique site locations and environmental conditions involved.)

III. CONTROLS OVER THE POSITION

The immediate supervisor of this position is the Manager, Mechanical Branch, who makes work assignments, approves leave, and initiates the incumbent's efficiency ratings.

Normally, work assigned will be performed under the general direction of higher grade engineering personnel of the Branch who will provide advice and guidance during the performance of the work, and will spot-check completed work for obvious accuracy and compliance with established objectives and guidelines.

Motor Vehicle Dispatcher
GS-2151-4

INTRODUCTION:

This position is located in the Transportation Division, this position provides Radio dispatching and regular dispatching duties for the OICC/RVN Saigon.

MAJOR DUTIES & RESPONSIBILITIES:

Review oral or written requests for Transportation from OICC and other authorized personnel. Dispatches radio taxis by means of two-way radio. Instructs drivers as to point of pickup destination, purpose and length of trip. Consolidates trips for better utilization. Arranges and coordinates morning and evening pickups to ensure economic use of taxi service.

Assigns "C” pool vehicles to various tasks insuring that the proper vehicle is assigned to the required task. Provides drivers when required and determines that only authorized personnel are assigned vehicles. Maintains records of "C" pool equipment available for dispatch.

Prepares and maintains trip tickets, vehicle logs fuel and oil consumption records. Prepares reports on fuel and oil consumption, mileage, trip and load reports and passenger loads.

CONTROL OVER THE POSITION:

Position is under the Automotive Transportation Specialist. Supervision is both oral and written. Instructions are in terms of objectives and also specific tasks.

QUALIFICATIONS:

Must be familiar with radio dispatch operations and be able to operate two-way radio. Must be qualified as chauffeur and be familiar with motor pool operations. Must be able to speak and understand simple English.

Office Services Manager
GS-342-9

I. INTRODUCTION

This position is located in the Administrative Services Division which is responsible for implementing and operating a Records Management Program; providing typing services; maintaining central files of correspondence; administering duplicating and reproduction services; providing mail, messenger and guard mail service; maintaining and controlling the OICC directives system; operation of the OICC RVN mail room; conducting OICC Reports Control Program; providing telephone, teletype and radio service to all of OICC RVN; implementing all procedures pertaining to travel both in-country and out of country, and the R&R program.

II. MAJOR DUTIES AND RESPONSIBILITIES

Listed below is summary of each office services function for which the incumbent is responsible. The services are provided for OICC RVN, DEPSEA, 3rd NCB, and limited services are provided to AFRCE, DCAA, FTAE and 3rd NCB Detachment.

a. Mail Systems Management. Overall responsibility for the general routing of mail whether controlled or direct, based upon the mission and responsibilities of OICC RVN and the desires of the division heads. Overall responsibilities for procedures to effectively dispatch mail to approximately 150 routing points and to dispatch outgoing mail originated by OICC RVN, determining whether it should be by courier or regular mail.

b. Files. Maintains central files for OICC RVN with overall responsibility for planning, organizing, directing and accomplishing the work whereby correspondence can be readily and expeditiously located for the personnel of OICC, in accordance with the Navy-Marine Corps Standard Subject Classification System. Maintains master file on OICC RVN instructions and notices and copies of higher headquarters instructions and notices. Serial files are maintained by Codes for a three year period.

c. Correspondence Management. Overall responsibility for developing and maintaining uniform correspondence procedures in accordance with the Navy Correspondence Manual; develops guidelines to be utilized by newly assigned personnel and typing pool trainees. Regulates duplication of copies requested by OICC RVN personnel. Outgoing correspondence is checked for proper format and to insure that it is signed, serialized and dated. Incorrect correspondence is returned to the originating code with instructions for the secretary or typist to make the required corrections.

d. Directives. Prepares drafts of all directives pertaining to administration for review of Code l0B. Reviews all OICC RVN directives prior to printing, for proper format and for conformity in accordance with the standards for writing instructions. Advises and assists other divisions in writing directives. Responsible for typing, printing, reproduction, maintaining master files and extra copies, and distribution of all OICC directives. All directives are reviewed quarterly. Originating codes are requested to make recommendations for retention, changes or cancellations to Code 10B1. Changes and cancellations are then prepared by Code 10B1. A list of effective instructions is published during this quarterly review.

e. Printing and Reproduction. Overall responsibility for reproduction and printing for OICC and supported activities, approving all requests, delivery of reproduced material, taking into consideration the cost of printing and reproduction; the need for the number of copies requested and the method or type of printing requested. Authority to change the request to a more economical method; to alter the number 6f copies required; and to determine if the requested delivery date is practical and within reason. Priorities are determined when needed.

f. Records Disposal Management. Overall responsibility for development and installation of methods, policies, procedures, and schedules for the systematic retention, transfer, and disposal of records, in accordance with SECNAVINST P5212.5B. Records are boxed by the codes and turned into 10B1 to be checked for retention, transfer or disposal. Transfer to storage is coordinated with Code 10B5.

g. Telephone Service. Overall responsibility for the telephone service of OICC and all supported activities. Incumbent has final approving authority for installation of new or additional equipment. Analyses and approves the need for additional service, coordinates trouble calls. Determines which lines should be restricted, based upon usage. Publishes OICC RVN/DEPSEA Telephone Directory and information required for Signal Corps Directory. Coordinates installation of phone systems with outside activities: Tiger lines (Army Signal Corps); ARVN lines (Vietnamese Army); PTT (Post Telecommunication and Telegraph-VN); approves all telephone bills submitted by PTT or other VN activities authorized to submit bills to OICC for payment by the U.S. Embassy. Coordinates all telecommunications work and ordering of supplies and equipment with RMK-BJR contractor.

h. Teletype Service. Overall responsibility for coming and outgoing teletype messages for OICC thru RMK-BJR. Maintains a log and file on all traffic. Messages are cut on tapes for ready re-transmission. Determines action code the same as incoming mail.

i. Travel. Overall responsibility for issue of both in-country and out of country travel orders in accordance with JTR. Handles all R&R requests, passports and visas, and Vietnamese drivers licenses. Provide travel and reservation booking services in connection with PCS and TAD travel orders for entire OICC, DEPSEA, TDY personnel and contractor employees. Prepares clearance requests for civilian personnel. Maintains cardex file on all civilian and military passport and visa information.

j. Typing Pool. Provides typing services to OICC divisions and loans personnel on temporary basis as needed.

k. Incumbent advises, assists any and all personnel in other divisions requesting guidance on establishing files, routing of mail within their divisions, correspondence control and format and any other service function.

III. CONTROLS OVER THE POSITION

Immediate Supervisor is Administrative Services Officer who allows incumbent to exercise maximum independence in the accomplishment of the mission. Work is not reviewed.

IV. QUALIFICATION REQUIREMENTS OF THE WORK

In addition to the Federal Service Qualification Requirement (X-118) incumbent must have a comprehensive knowledge of the OICC regulations, policies, instructions and missions of the organization services; a working knowledge of other principles of supervision and management; a working knowledge of the functions under his control. The incumbent must have the ability to manage and supervise an office services program and ability to effectively handle personal work contacts and the ability to make decisions quickly. Because of the language barrier he must have a high degree of persuasiveness, ingenuity, resourcefulness and patience.

EVALUATION STATEMENT - OFFICE SERVICES MANAGER Code 10 B 1

A.	Functions		Scope	Points	
	1.	Mail-Credited under 7.		0	
	2.	Files	Major	6	
	3.	Printing & Duplication`	Minor	2	
	4.	Procurement of Supplies		0	
	5.	Correspondence management	Minor	2	
	6.	Forms management		0	
	7.	Mail systems management	Major	6	
	8.	Records systems management		0	
	9.	Records disposal systems	Major	6	
	10.	Reports management		0	
	11.	Communications telephone (includes teletype & radio)	Major	6	
	12.	Typing pool	Minor	2	
	13.	Building maintenance		0	
	14.	Office equipment repair		0	
	15.	Machine tabulation		0	
	16.	Travel	Major	6	
	17.	Space management		0	
	18.	Transportation		0	
	19.	Property management		0	
	20.	Photography		0	
	21.	Graphic arts		0	
	22.	Translations services	Minor	2	38
B.	Level of supervisory duties & responsibilities				
		Level C is appropriate			54
C.	Magnitude of operations serviced				
		Situation C (from 600 to 1500 employees)			18
					110

SUMMARY

Point range for GS-10 is 106 to 114.
By use of Table A, 6 major functions at level C supervisory scope and situation C magnitude of operations, also converts to GS-10.

Office Services Manager, GS-342-10

Personnel Officer
GS-201-13/12

(This position assumes operation of personnel office under OICC.)

I. INTRODUCTION

The position is that of Personnel Officer, Civilian Personnel Office, OICC. Incumbent has responsibility and authority to develop and direct a comprehensive personnel management program designed to meet management and operating requirements of the activity, which administers construction, architectural contracts for U. S. as assigned.

II. MAJOR DUTIES AND RESPONSIBILITIES

A. Directs, develops, and coordinates full-range civilian personnel program including staffing and placement classification, and training for U.S., local nationals, and third country personnel. Personnel systems used are U.S. Civil' Service and SECNAV personnel system, a second system applicable to foreign local hire and a third for direct-hire third country nationals.

B. Within the framework of C.S.C. Rules and Regulations, related laws and statutes, SECNAV personnel policies, host country and third country governing regulations, incumbent plans, formulates, coordinates, interprets and issues personnel policies, procedures and directives. On a continuing basis reviews and analyses, personnel problems and situations, considers changes in work programs for personnel implications, and recognizes new developments or changes in philosophy and practices of personnel management. Serves as head of the immediate staff of the OICC for shaping and guiding the activity's personnel operations.

C. Incumbent speaks for top management in civilian personnel liaison and arbitration matters with higher level Naval authority, host country, and third party agents.

D. Incumbent supervises and coordinates work performed by subordinates, develops long-range programs through regular discussion with staff specialists, and checks work progress through daily contacts, personal review of complex cases and general review of office operations.

III. CONTROLS OVER THE POSITION

A. For operational control over basic policies and major cases, incumbent reports to OICC.

B. For administrative control, incumbent reports to AOICC for Administration Personnel. Incumbent recommends staffing needs and changed program emphasis when such changes are influenced by funding and ceiling controls.

Incumbent's work is reviewed in terms of the whole civilian personnel program and periodically by inspections from CSC or Navy's Office of Civilian Manpower Management.

Basic written guides are provided by law, CSC regulations and interpretation of the Comptroller General. Written guides of Navy Civilian Personnel Instructions and OCMM Notices and Instructions constitute the major written guides of the position.

IV. QUALIFICATION REQUIREMENTS OF THE WORK

Experience in civilian personnel work in Navy operating situations, or the equivalent, with not less than one year in a supervisory position.

Program Analyst
GS-345-9/7

I. INTRODUCTION

This position is located in the Program Management Office, which is responsible for all aspects of the sponsor's contract construction program involving scope of work, funding, and time for planning/design and construction.

II. MAJOR DUTIES AND RESPONSIBILITIES

The incumbent is responsible for assisting a higher grade Assistant Program Manager in overall management, planning, and control of an assigned area of responsibility within the service construction program. In this capacity, the incumbent will perform the following duties:

1. Analyze sponsor construction requirements to determine the impact on contractor capability, funds available, and time requirements to complete the construction;

2. Prepare requests for planning/design and cost estimates of the construction projects;

3. Prepare, from standard formats, Notices to Proceed to the CPAF contractor to initiate construction effort;

4. Analyze reports received from contractors, OICC field personnel, and other sources to determine trends, identify problem areas, and uncover deviations from the planned scope-funding-time plans for the construction projects;

5. Assemble data and statistics and compile into reports, as required, to maintain a current picture of the construction projects assigned;

6. Ensure that necessary files are maintained to have applicable information available;

7. Update mechanized reports on construction status from information from various sources.

8. Perform such other tasks as assigned by his immediate supervisor.

III. CONTROLS OVER THE POSITION

Incumbent will work under the direct supervision of an Assistant Program Manager, who will provide information regarding objectives, define limits and objectives of assignments and will discuss the work and its progress. The work will be reviewed in terms of adequacy, accuracy, and expediency in accomplishing assignments, effectiveness in personal relations and presentation of data.

IV. QUALIFICATION REQUIREMENTS OF THE WORK

The position requires the incumbent to have knowledge of the construction field, a background in modern management engineering, and some knowledge of military accounting procedures. He must be capable of working effectively and harmoniously with others under extreme pressures and short time deadlines.

Public Information Officer
GS-1081-12/11

I. INTRODUCTION

The position is located in the Public Affairs Office, Code 20E, the function of which is to develop and maintain an effective public information program for OICC RVN. The purpose of the position is to act as public Information Officer.

II. MAJOR DUTIES AND RESPONSIBILITIES

Incumbent evaluates the information potential of OICC activities and achievements; plans media coverage; writes copy; and insures its presentation to maximum extent in publications, news media and to groups.

1. Responsible for the development and the continuous maintenance of an effective Public Information Program which will fully inform the general public, various organizations and civic groups, congressional representatives, other interested persons of the activities and mission of the OICC. Involved is explaining the objectives and purposes of activities carried on and especially the benefits derived, to clear up misunderstandings that exist, and to anticipate and endeavor to eliminate possible adverse criticism.

2. Analyze public information media to determine their effect on the Public Information Program. On items which are likely to have an adverse effect, contacts key technical and administrative personnel, securing complete background information and recommends to the OICC methods and steps for preventive or corrective action, and ways and means to improve and insure a more effective Public Information Program.

3. As Information Officer serves as clearinghouse for spot news, obtaining information from key personnel, and contacting editors by telephone or message, relative to unusual events occurring during construction. Organizes and plans releases in connection with award of contracts, ground-breaking ceremonies, beginning and completion of construction activities, dedications, and participation of OICC personnel at conferences, or other special assignments requested by higher echelon. Through continuous contacts, either personally or by correspondence or telephone, maintains cordial relationship with editors of engineering construction trade magazines, and local editors, dailies and Stateside outlets.

Arranges for and participates in advance planning, prepares press releases, arranges for photographic coverage of actual events, etc. Develops ideas, writes script and exercises staff supervision over the production and usage of information. Arranges for press conferences with OICC officials, Congressmen, Senators, dignitaries, etc. Reviews photographs, writes copy and makes necessary arrangements for exhibits for visiting dignitaries, explaining the work of OICC RVN; acts in liaison capacity with other groups, and responsible that final exhibit adequately presents information effectively and is easily understood

4. Writes speeches, explanatory statements to be used by officials of OICC and key engineering personnel in various public appearances. Obtains basic information for such writing projects by interviewing key personnel through study and research of reports, charts, field trips, etc. Develops and edits such material for final presentation, reflecting the activities and policy views of OICC.

5. Receives inquiries and requests for information from a wide variety of groups and individuals. Furnishes information requested by research of files, program charts, etc. Contact key personnel to obtain necessary information or data. On request for appearance of personnel makes all necessary arrangements for public appearance. Prepares publicity and speech material designed for publication and/or for public address. On requests for special photographs to accompany a story, special material for features article, press tours to projects, obtains required clearances and coordinates with various Branches and Divisions and makes all necessary arrangements. Coordinates with Security Officer to insure security for classified information.

III. CONTROLS OVER THE WORK

Works under the supervision of the Deputy OICC. Receives overall instructions as to assignments to be accomplished, responsible for developing own techniques in carrying out the program to obtain desired results. Completed work is reviewed only as to meeting of objectives, effectiveness of results and adherence to policies.

Security Officer
GS-085-9 ,11

I. INTRODUCTION

This position is located in the AOICC for Administration, Security Division1 Code 10B3. This Division is responsible for the development, planning and execution of the Physical Security System, Circulation Control System, Identification and Ration Card and Privilege Card Systems for the OICC, DIRCONS, ROICC's and contractor organizations. This includes all special type passes needed for different areas. Fingerprinting of employees processed for employment, preparing reports to MACV and maintaining files as required by existing policies and regulations. The purpose of this position is to perform the duties of Branch Supervisor responsible for the above functions. Incumbent is Physical Security Officer of 84 Civilians Guards. Is responsible for preparation of all OICC Security instructions, adds or deletes guard post as needed. Responsible for purchasing guard uniforms and other related supplies. Process all incident reports on all OICC military, civilian and contractor personnel. Also required to maintain an Arms Storage room for all OICC personnel. This includes Military and Civilians. Responsible for maintaining adequate storage, cleaning facilities, requisitioning adequate supplies of ammunition and weapons. Also for arranging and executing training programs that include range firing of weapons for all assigned personnel. Proper storage and protection of weapons and ammunition. Responsible for the maintenance of proper records on all OICC weapons. Conducts range firing programs for Military and Civilian on a quarterly basis.

II. MAJOR DUTIES AND RESPONSIBILITIES

1. Incumbent is responsible for the Physical Security of all leased buildings and materials at 10 separate locations. He closely monitors the Guard Services Contract, including final approval on hiring and on disciplinary actions. He directs the contractors training programs and his shift operations plan. He is overall administrator of a Force of 84 Guards.

2. Develops, plans and executes procedures applicable with current directives for the issue, storage and destruction of all identification privilege cards and ration cards for OICC, TAD, NAVFORV and 32 Civilian Contractors. Responsible for the establishment and maintenance of records and files for the same. Incumbent is responsible for maintaining contact and liaison with MACV to insure that all changes to the above are complied with; must know and fully understand all directives applicable to the above.

Incumbent is responsible for processing and obtaining curfew passes for OICC, TAD, VN employees, also NAVFORV, employees of OICC, this requires direct contact and liaison with the VN Military Secret Service, Capital Military District. This liaison is necessary to keep current on practices and procedures in various types of applications for special passes.

3. Supervises 4 office personnel who are responsible for the issuance of ID and Ration Cards to all Military and Civilian personnel.

4. As Physical Security Officer makes investigations.

III. CONTROLS OVER THE WORK

Under the immediate supervision of the Military Services and Security Officer. Incumbent plans own work schedule and requests advice and assistance from supervisor on unusual or policy determining actions/ Incumbent is evaluated on overall effectiveness of the Security Branch. Position requires secret clearance.

IV. QUALIFICATION REQUIREMENTS OF THE WORK

The incumbent of this position must have a minimum of six years of experience in Administrative and Investigative type work, including the planning of a Security Program.

The required experience must include a knowledge and understanding of current internal security problems and a knowledge of subversive organizations and their methods of operation or a familiarity with the various sources of information regarding such organization and their activities and agents.

Supervisory Supply Management Office:
GS-2003-13, 12

I. INTRODUCTION

This position is in the Material Branch, the functions of which are outlined in the OICC Organizational Manual. The incumbent is Director of the Material Branch and as such provides administrative and technical supervision to personnel ranging from GS-12 to GS-7 who are engaged in providing policy guidance, technical assistance and program evaluation for the overall Material Management program in support of Contract NBy 44105.

II. MAJOR DUTIES AND RESPONSIBILITIES

1. Plans, organizes and directs the Operations of the Material Management Division. This includes the development of program objectives and the development of plans for, and installation of, systems for the efficient operation of the Contractor's Inventory Management System.

2. Responsible for monitoring the Contractor's existing inventory management system to insure that actual or potential problem areas are dealt with in a systematic and effective professional manner.

3. Provides advice and makes authoritative determinations concerning inventory management matters to the AOICC for Material. Resolves unusually difficult problems pertaining to inventory management matters.

4. Conducts systematic appraisal reviews of the CPAF Contractor automated inventory management processes and evaluates adequacy of individual elements in relation to the total system. Coordinates with other Resources staff members on matters affecting more than one technical supply area, i.e. ,procurement; transportation; inventory management; cataloging and standardization to insure that total system integrity is preserved and that improvements and major system changes are incorporated with a minimum disruptive effect.

5. Responsible for monitoring the Contractor's Standard Operating Procedures, ADP Reports, Operational Manuals and other similar publications pertaining to the Material Management Program. Coordinates for OICC in the approval of changes, revisions and/or deletions thereto. Is responsible for originating AOICC and OICC Procedures as they relate to the inventory management program.

6. Has overall responsibility for providing policy guidance and operational direction to the Industrial Property Program. Acts as personal assistant to the Property Administrator and represents him as required.

III. CONTROLS OVER THE POSITION

Under the general supervision of the Resources Officer who provides broad general guidelines in terms of overall program objectives. Exercises a high degree of latitude and freedom of action in managing the operations of the Division. Incumbent's work is reviewed on the basis of overall results and the effectiveness of the Division as a whole.

IV. QUALIFICATIONS

A professional level supply managerial background gained through a progressive, broad span experience in Governmental logistics operations is required. Experience should include positions at progressively complex and responsible levels over procurement, provisioning, supply operations and inventory management. Must have a working knowledge of ADP applications to logistics systems and with the application of Systems analysis techniques to logistics problems.

Supervisory General Supply Officer
GS-2003-11

I. INTRODUCTION

This position is located at one of the Contractor's major depots, and monitors the OICC RVN and the Contractor's industrial property and material management programs.

II. MAJOR DUTIES AND RESPONSIBILITIES

1. Maintains continuous surveillance over depot operations to insure conformance with the Contractor's approved standards, policies and procedures. Evaluates deviations and their effects upon the system and provide necessary guidance and assistance to Contractor supply personnel.

2. Gathers, maintains and analyzes data relative to depot operations. Advises depot officials of existing and/or potential problem areas and recommends corrective actions. Conducts special studies and advises the ROICM of findings and recommendations. Drafts local instructions and procedures relative to depot operations. Maintains surveillance over all physical inventories and acts as approving authority on adjustments.

3. Provides the necessary liaison with other local DOD and Government agencies relative to procurement and supply matters.

4. Conducts a property redistribution and disposition program for processing and screening of Contractor inventory available for transfer with reimbursement to other Federal Agencies. Approves releases and/or transfers of materials to other local DOD and Government agencies or secures approval from higher authorities.

5. Acts as approving authority for and controls the processing of surveys of material and equipment. Conducts analytical studies and investigates circumstances under which thefts, losses, damage or destruction of Government property occur.

6. Compiles report data and formulates administrative reports and charts for information and presentation purposes.

7. Directs the Labor and Material Checker operations in support of depot activities, and the Industrial Property Officer's surveillance and distribution program.

III. CONTROLS OVER THE POSITION

Under the general supervision of the Material Officer who relies on incumbent to accomplish assigned duties as directed by established procedures and governing directives, on own initiative. The Material Officer provides only

broad and general guidance.

IV. QUALIFICATION REQUIREMENTS OF THE WORK

This position requires a broad kn9wledge, background and experience in supply and programming activities and an understanding of industrial practices in control and disposition of Government-Furnished property. He must be able to exercise sound judgment in discussion and resolution of problem areas where daily contacts with Contractor management and DOD personnel are concerned. Persistence, resourcefulness and tact are essential in these contacts to arrive at an equitable solution of problems and to achieve the most effective working relationship.

Supply Clerk
GS-2040-5

I. INTRODUCTION

Purpose of this position is to supervise the Property Control Section. Property Control is composed of the Plant Account Class III, Stock control, warehouse, issue of expendable office supplies, and a labor force.

II. MAJOR DUTIES AND RESPONSIBILITIES

1. Directs and coordinates the work of subordinates, including Stock Identifiers, Plant Account Clerks, and Stock Control Clerk.

2. Supervises the storing and issuing of supplies. Insure that inventories are made periodically and that stock levels are sufficient to meet demands.

3. Insures that stock control records are kept and are up-to-date.

4. Reviews procurement request and recommends best method of procurement.

5. Researches catalogs, vendors proposals, listings etc., for identity, cost and shipping procedures, policies and problems. Where appropriate causes competitive bidding to occur including writing and editing of specifications and evaluating contractor proposals.

6. Initiates and monitors contracts or other performance of office equipment maintenance, keeps record cards and other documentation on procurement, usage, and repair of such equipment. Maintains liaison with equipment repair firms to determine capabilities and competency of repair functions.

7. Composes reports of survey or other documentation for unused equipment.

8. Monitors contracted services, e.g., janitorial, office machine repair, rubbish disposal etc., initiates new or replacement contracts approved by supervisor.

9. Incumbent is authorized to sign limited procurement documents.

III. CONTROLS OVER THE POSITION

Reports directly to the services and supply officer. The incumbent must keep the supervisor informed of office operations and collaborate in the interpretation of property administration and procurement directives.

IV. QUALIFICATION REQUIREMENTS

Incumbent must have a thorough knowledge of applicable Naval and local procedures, laws and regulations, as they apply to the mission of his office. The incumbent must have the ability to cope with varying situations as they arise in the performance of his duties as Property Administrator for GFM, Procurement Officer. Incumbent must use good judgment and tact in dealing with members of the OICC, Staff, contractors, business representatives, foreign military and civilian officials, and officials of other U.S. Government agencies. Incumbent must have knowledge of local procurement methods and sources, including shipping services and agencies to provide all required services.

Traffic Management Specialist
GS-12, l1

I. INTRODUCTION

This position is in the Transportation Branch, Resources Division. The Incumbent serves as a Staff Specialist with overall responsibility for the Traffic Management functions in support of contracts administered by the OICC.

II. MAJOR DUTIES AND RESPONSIBILITIES

1. Acts as overall coordinator within the Transportation Branch on all matters pertaining to the Traffic Management functions in support of OICC organizations.

2. Plans, develops, implements, manages and evaluates a Traffic Management program for the OICC RVN. Maintains liaison with MSTS, TMA, MACV and other activities to insure the necessary interface between the OICC Traffic Management Program and the programs and objectives of higher Military Headquarters.

3. Has overall responsibility for coordinating and expediting inter-country shipments of a large volume of measurement tons of cargo per month and represent the full spectrum of commodities and methods of transportation.

4. Maintains continuous surveillance and provides technical assistance to Contractor and OICC activities on intra-country shipments and general transportation matters. Resolves problem areas and recommends most appropriate method for corrective action.

5. Represents the OICC at regularly scheduled and special Traffic Management meetings and commits the Command to action. Provides staff summaries to management and recommends internal courses of action.

6. Gathers, analyses and summarizes quantitative data on traffic management activity. Maintains continuous awareness of significant trends and initiates required actions to bring trends in line with overall program objectives. Evaluates overall Contractor's performance of transportation and traffic management functions. Identifies actual or potential deficiencies and recommends specific corrective or preventive courses of action.

7. Review and interprets instructions, regulations, policies, and statutory and fiduciary restrictions relative to all elements of traffic management activities. Provides guidance to Contractor and OICC RVN activities as required and insures compliance.

8. Conducts special studies on traffic management matters.

III. CONTROLS OVER THE POSITION

Under the general supervision of the Transportation Officer who provides broad general guidelines in terms of overall pro-gram objectives. Otherwise, operates independently and exercises a great degree of latitude of action and personal initiative. Incumbent's work is reviewed on the basis of overall results and total effectiveness of the Traffic Management Program.

IV. QUALIFICATIONS

Must possess a comprehensive knowledge of all phases of transportation and traffic management both military and commercial. A professional level background in the traffic management field, gained through progressive, broad span experience in Governmental operations is required. Experience should include satisfactory performance at progressively responsible levels of the Transportation Traffic Management career field. A general knowledge of Depot Operations, Inventory Management practices, the Federal procurement process, military requisitioning procedures and ADP applications is highly desirable.

Travel Clerk (Typing)
GS-2132-5

I. INTRODUCTION

This position is located in the Communications and Classified Files Branch. The incumbent of this position serves as Travel Clerk and in addition provides typing and clerical assistance in support of the functions of this Branch.

II. MAJOR DUTIES AND RESPONSIBILITIES

1. Performs a variety of duties in providing advice and assistance on travel and transportation matters to callers, both in person and by telephone. Plans and prepares itineraries for travel which vary in difficulty from those requiring a single mode of transportation, few rerouting or rearranging problems, schedules to recurring areas and accessible by normal methods of transportation to those which require combinations of several modes on individual trips. Screens requests for travel orders, checking for administrative correctness and accuracy of content. Determines requirements, i.e. schedule, itinerary, etc., appropriate carrier(s) and most advantageous as well as most direct route(s) to be used. Makes arrangements for tickets and related items. Prepares estimates of travel costs on each travel order, transportation request and estimates of cost on transportation requests. Receives and reviews travel voucher claims submitted by travelers; checks vouchers against statements of travel to assure that rules and regulations have been followed; contacts traveler if a discrepancy appears on claim and makes necessary adjustment; verifies amounts claimed against travel guides and regulations; completes travel vouchers including necessary statements, and assembles same. Maintains travel files and records to monitor travel claims and advances to assure compliance with pertinent regulations.

2. As required and time permits, types a variety of material such as letters, speedletters, dispatches, memoranda, statistical tabulations, reports, directives and notices which may involve specialized subject matter. Composes routine correspondence such as replies to requests for general information, work orders, requisitions, etc. Maintains an established set of office files. Answers telephone, takes and relays messages and refers callers to person asked for or known to be concerned with the subject of the call.

3. Prepares area clearance requests as needed for in-country compliance. Processes and follows up on passports and visas as required for travel of OICC personnel.

II. POSITION CONTROLS

Receives very general supervision from the Management Information Officer. Supervision consists primarily of review of completed work to determine results achieved rather than for evaluation of technical skill in planning, designing and preparing material for presentations, exhibits and printed material; work performed in connection with the MIC is evaluated on the basis of reports received from top level management as to degree of competence in meeting prescribed objectives. Incumbent is expected to function with optimum independence in performance of visual information specialized work as well as in operating the MIC.

IV. QUALIFICATION REQUIREMENTS

Work requires a very high degree of originality and creativity as well as ability in designing, layout, lettering, and versatility in performing visual information specialist duties and in operation of the MIC; a thorough knowledge of the potentialities of a wide variety of media and of authorized reproduction processes; and ability to deal effectively with all levels of management when serving in an advisory capacity in planning and designing materials.

Visual Information Specialist
GS-1084-9

I. INTRODUCTION

Position is located in the Management Information Center. Purpose of this position is to design and display such visual materials as illustrations, slides, charts, photographs, diagrams, and graphs to be used in printed material, exhibits, speeches, indoctrinations, and training conferences; and as workload permits, participates in management analysis studies.

II. MAJOR DUTIES AND RESPONSIBILITIES

A. Receives requests from top management throughout the activity to design and display pictorial illustrations of various individual and/or overall aspects of functions of the activity in the form of very brief description of end result to be obtained or idea to be presented. Consults with the requestor relative to data to be included in proposed presentations, printed material and/or exhibits and concerning sequence desired and relationships to be stressed. Determines most effective method for communicating information or ideas desired by the requestor based on subject matter, organizational and educational level of recipients, variety of points, to be covered and media used in other portions of the presentations, exhibits and/or printed material. Selects the visual materials (such as, photographs, illustrations, models, maps, charts, and specimens) to be used in communication of information. Determines most effective colors and color schemes, size and style of type and placement of narrative text in relation to the visuals used.

B. Designs and prepares drawings, sketches, and finished illustrations that fulfill the objective of the subject-matter specialists or managers requesting design of pictorial displays. Representative examples of items drawn or subject displayed are:

(1) Flip chart presentations, hand lettered and decorated with symbols, borders, cartoons, etc., to emphasize the material being presented. Normally, these are one-time presentations with an average of 20 flip pages and are geared by me to appeal to the type of audience to which it is presented. Usually, format, grouping of ideas, styles, etc., are left up to me and all illustrations and decorations are conceived and executed by me, but the text is provided.

(2) Numerous posters, charts, fliers, handouts, etc., to advertise events.

Uses any of the various art media including pen and ink, pencil, tempera, brush overlays, tapes, felt tipped markers, colored pencils and inks in preparing drawings, sketches and finished illustrations.

C. Operates the Management Information Center (MIC) for OICC which includes charts, graphs, and illustrations, depicting various statistics concerning the performance of the OICC against a predetermined plan. Reviews all long, mid, and short range operating plans and maintains a continuing awareness of current sensitive action areas to determine what information will be needed to display in the MIC. Determines most expedient methods for obtaining information necessary to manage the resources of the command through the MIC and obtains required data from cognizant personnel throughout the activity. Evaluates statistical information received from various operating components in order to point out the strengths and weaknesses in operations. Forecasts trends and, in conjunction with program managers, recommends corrective action such as a shift in effort to meet a target or a rescheduling of milestones or events in order to meet established goals or points out future developments which will alter apparent trend. Personally makes oral presentations to top management of the activity covering production and other statistical charts displayed in the MIC; obtains from cognizant personnel information as to "why" certain data is either at, above or below effectiveness level desired by the Commanding Officer or higher authority and includes this information in presentations made; and provides explanations of meaning of data furnished.

III. CONTROLS OVER THE POSITION

Receives general supervision. Carries out continuing duties and responsibilities independently in accordance with established office policy, practices, and guidelines. Supervisor normally explains new and unusually difficult assignments and disseminates any changes in office policy and/or procedures. Completed work is subject to spot check. Informational and other clerical services are reviewed periodically in terms of general effectiveness.

IV. QUALIFICATION REQUIREMENTS FOR THE WORK

Must meet the established qualifications for a Travel Clerk and Typist.

REQUIREMENTS FOR COMMUNICATIONS

COMMUNICATIONS EQUIPMENT
FOR
OFFICER IN CHARGE OF CONSTRUCTION

(Organization #1)

General Telecommunications Specifications

Telephone

300 Line Transportable Private Automatic Branch Exchange with two position switchboard

Features

20	percent trunking (links)
40	two-way universal interoffice E&M trunks (one-way or two-way) direct outward-inward dialing
5	AUTOVON access trunks (2 precedence - 3 routine)
100	percent line lockout
	Station hunting (rotary service)
	Four digit local dialing (on-base calls) seven digit plan
	Station restriction
	Reserve battery power (8 hour reserve)
	Power failure transfer
	Night answering arrangement
	Conference arrangement
	Line load control
	Busy Override - by operator only

Associated Equipment & Material

6	call directors
100	single line instruments
200	multi-line instruments (six button sets)
3	speaker phones
4	36 station - 2 link key system intercom units
15	common ringers
6	external ringers
	Inside wiring cable (6 - 10 - 25 - 50 - 100 pair)
	Outside shielded cable
	Cable terminals
	Miscellaneous hardware and material

Radio

4 fixed station single side band transceivers
10 mobile station single band transceivers

Miscellaneous Equipment

1 teletype machine - duplex operation
1 AUTOSEVOCOM subscriber unit
1 AUTODIN terminal unit.

COMMUNICATIONS EQUIPMENT
FOR
DIRECTOR OF CONSTRUCTION, NORTH OR SOUTH

(Organization #1)

(Duplicate requirements if for both NORTH and SOUTH)

General Telecommunications Specifications

Telephone

100 Line Transportable Private Automatic Branch Exchange with one position switchboard

Features

20	percent trunking (links)
15	two-way universal interoffice E&M trunks
	(one-way or two-way) direct outward-inward dialing
100	percent line lockout
	Station hunting (rotary service)
	Four digit local dialing (on-base calls) seven digit plan
	Station restriction
	Reserve battery power (8 hour reserve)
	Power failure transfer
	Night answering arrangement
	Conference arrangement
	Line load control
	Busy override - by operator only

Associated Equipment & Material

2	call directors
50	single line instruments
75	multi-line instruments (six button sets)
1	speaker phone
1	36 station - 2 link key system intercom unit
8	common ringers
3	external ringers
	Inside wiring cable (6 - .10 - 25 - 50 Pair)
	Outside shielded cable
	Cable terminals
	Miscellaneous hardware and material

Radio

1 fixed station single side band transceivers
5 mobile station single side band transceivers

Teletype

1 teletype machine - duplex operation

COMMUNICATIONS PERSONNEL REQUIREMENTS
FOR
OFFICER IN CHARGE OF CONSTRUCTION

(Organization #1)

General personnel Staffing

Telecommunications Section, Head

1 - Electronic Engineer (Wire Communications)/Communications Specialist GS-X (12)

Telephone Operators

1 - Supervisor GS-X (5)
2 - Operator GS-X (3)

Plant Personnel

1 - Central Office Repairman
2 - Electrician (Telephone)
3 - Electrician (Lineman Communications)
1 - Cable Splicer (Communications)
1 - Electronic Mechanic

Vehicle Requirement

1 - Supervisor Pickup
2 - Telephone Installation Truck (3/4 Ton)
1 - Line Truck
1 - Auger Truck

NOTE:

The staffing indicated for the Telecommunications Section is general. Firm staffing can only be determined after the OICC functions, geographical location and size of operation is known.

The GS-X (5) grades indicated are examples.

The Plant Personnel are indicated for wholly Government-owned telephone systems. Plant personnel would not be required if the OICC should be located in an area where commercial services are reasonable and adequately available on leased or rental basis.

In the procurement of the Private Automatic Branch Exchange (PABX) equipment, the supplier should be required to submit with their proposal a recommended "Training Plan for Maintenance of the Equipment."

COMMUNICATIONS PERSONNEL REQUIREMENTS
FOR
DIRECTOR OF CONSTRUCTION, NORTH OR SOUTH

(Organization #1)

General Personnel Staffing

Telephone Operators

1 - Supervisor GS-X (4)
1 - Operator GS-X (3)

Plant Personnel

1 - Combination man (COR/Electrician (Telephone)
1 - Electrician (Telephone)

Vehicle Requirement

1 - Telephone Installation Truck (3/4 ton)

PLAN FOR ESTABLISHING A COMMAND INFORMATION
BUREAU AND SUBSEQUENT PUBLIC AFFAIRS OFFICE

A. PURPOSE. This plan will outline the specific methods for ensuring the adequate and timely dissemination to the working press and the general public concerning the Naval Facilities Engineering Command's OICC (Officer in Charge of Construction) construction programs. By definition, these programs are categorized as small - up to $25 million initial input an/or not exceeding $25 million input per year; medium - $25 to $100 million input per year; and large - in excess of $100 million.

B. BACKGROUND. The Public Affairs mission of the Navy is to inform the public and the naval service concerning:

1. The Navy as an instrument of national policy and security.

2. The operations of the Navy, as much as is compatible with military security.

3. The responsibilities and activities of naval personnel as United States citizens.

4. The Navy's contribution to international relations.

C. OBJECTIVES.

1. To establish a central point for the orderly flow of information from the OICC to the working press and the general public.

2. To assist the OICC during the construction program by coordinating all public and press relations so that they complement rather than interfere.

3. To seek out continually unique and interesting methods of presenting the OICC's operations and program to all segments of the public.

D. POLICY. Public Affairs policy, coordinated with the Naval Facilities Engineering Command, and set forth by the Chief of Information (CHINFO) and the Chief of Naval Material (CNM), will be implemented by the Officer-in-Charge, Command Information Bureau (CIB) under the direction of the OICC. Cooperation will be extended to all newsmen in accordance with existing directives from higher authority.

E. RESPONSIBILITIES. The Officer-in-Charge, Command Information Bureau OICC (geographical area) and herein after referred to as the Public Affairs Officer will:

1. Promulgate and implement public affairs policy, consistent with this plan and directives of higher authority.

2. Coordinate and control all public affairs activities of the OICC in accordance with the provisions of this plan and as directed by the Naval Facilities Engineering Command and the OICC.

3. Coordinate the arrangements for on-scene coverage briefings, transportation, berthing and messing of newsmen if required. Prepare and distribute press information kits.

4. Authorize and serve as sole releasing authority for the release of routine news, photography, radio and television material. Coordinate the release of all news of national interest with the Naval Facilities Engineering Command Public Affairs Office for further coordination with CHINFO and release by OASD (PA).

5. Coordinate photographic coverage for public affairs, technical and documentation purposes.

6. Coordinate the public affairs aspects of any emergency/disaster situation in accordance with Annex A, Adverse Incident Plan, to this plan.

7. Maintain security in accordance with guidance shown by Annex B.

F. METHODOLOGY. The OICC (geographical location) Command Information Bureau (CIB) will be established at the Naval Facilities Engineering Command not later than 45 days prior to the establishment of the prospective OICC(_____ _____) and will move to the headquarters of the OICC in-country, when established, and will remain in operation for a period of 120 days following the arrival of the in-country. During this 120-day period a permanent public affairs office will be established by the OICC within his organization (See Annex B) that will absorb the duties and functions of Command Information Bureau which will be phased out at this point. The specific organization and functions of the OICC CIB are outlined here below. They will be carried out utilizing standard public information practices.

1. OICC CIB Organization

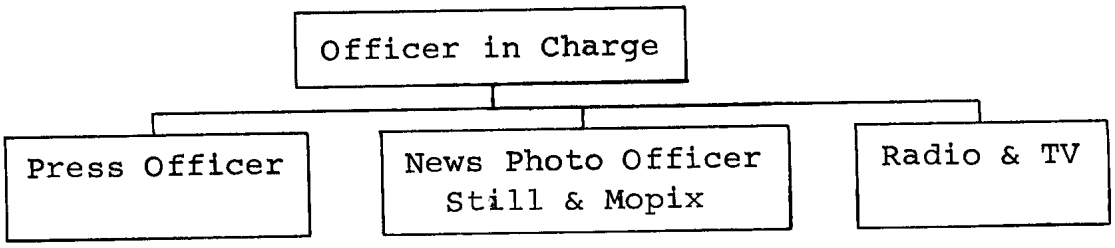

2. Personnel Required. To be assigned duties/functions at discretion of Public Affairs Officer (OIC), in accordance with established organization.

Large OICC Program:	1 Public Affairs Officer (Military/Civilian) 1 Writer-Editor (Military JO/Civilian) 1 Still Photographer (Military/Civilian) 1 Mopix Photographer (Military/Civilian) 2 Secretary/Clerk Typist (Civilian/Yeoman)
Medium OICC Program:	1 Public Affairs Officer (Military/Civilian) 1 Writer-Editor (Military JO/Civilian) 1 Photographer (Military/Civilian) 1 Secretary/Clerk Typist (Civilian/Yeoman)
Small OICC Program:	1 Public Affairs Officer (Military/Civilian) 1 Photographer (Civilian/Military) 1 Secretary/Clerk Typist (Civilian/Yeoman)

In the establishment of a medium or small OICC CIB, personnel assigned will be responsible for multiple public affairs/public information functions.

3. Responsibilities and Duties of OICC CIB Personnel.

   a. Duties of Officer in Charge.

      (1) Supervise the management of the CIB.

      (2) Coordinate and supervise the release of all information concerning the construction program.

   b. Duties of the Press Officer.

      (1) Supervise the arrangements of all press visits to construction site(s).

      (2) Preparation and distribution of press kits.

      (3) Arrange for all interviews.

      (4) Arrange for all press conferences.

   c. Duties of News Photo Officer.

      (1) Supervise the processing and release of all black and white still photography. Color photography will be forwarded unprocessed to NAVFAC PAO for processing complete with captions. Copies of released black and white photographs complete with captions and the original negatives will be forwarded to NAVFAC PAO.

      (2) Maintain a complete account of all photographic negatives and proofs for future reference.

      (3) Establish and maintain a complete master library of still photographs of the project.

      (4) Supervise all still photography arrangements for special occasions during the project.

      (5) Coordinate the release of all motion picture footage with the Production Division NAVFAC PAO.

   d. Duties of the Radio-TV Officer.

      (1) Supervise all arrangements for radio and television broadcasters at construction sites as required.

      (2) Coordinate all requests for radio and

television interviews with the OICC and project personnel.

(3) Keep broadcaster informed of the avail- ability of special or unique projects which would lend themselves to television/radio coverage.

G. GENERAL PROCEDURES

1. Press Conferences and Briefings.

a. All press conferences will be conducted at the OICC headquarters unless authorization is granted by the OICC for site press conferences.

b. Advance announcement of all press conferences and briefings will be made to the media as far in advance as possible (at least three working days).

c. The OIC, CIB and the Press Officer will make the arrangements for all press conferences and briefings. These arrangements include briefing materials, audio-visual aids and agenda planning.

d. In general, press conferences will adhere to the following format:

(1) Opening of the press conference and introduction of the OICC by the Officer in Charge CIB.

(2) Opening remarks by the OICC.

(3) Introduction of participant on the platform. (and VIP's if in attendance) by the OICC.

(4) Individual remarks by the participants.

(5) OICC invites questions by the press.

(6) Press conference participants will be designated by the OICC in consultation with the OIC CIB.

2. Interviews. All press interviews will be conducted at the CIB where possible in order to minimize interference with construction personnel at their construction sites. When requested, and on a strict scheduling basis, interviews may be arranged for the press at the construction sites.

3. News Photographs.

   a. All official photography of OICC's operations will be processed locally.

   b. Black and white contact prints will be furnished to the News Photo Officer as soon as possible after processing for selection of those photographs considered suitable for release.

   c. The News Photo Officer will follow the standard captioning and filing procedures set forth in the U.S. Navy Photography Manual.

   d. Preliminary selection of photographs for release or retention will be made by the News Photo Officer. Final selection will be made by the OIC, CIB and/or the Press Officer.

   e. All color photography will be forwarded processed to the NAVFAC PAO for processing. Duplicate transparencies will be returned to the OICC, CIB.

   f. Once initial distribution of released photographs has been made at Command Information Bureau, the negatives will be forwarded to the NAVFAC PAO for retention.

4. Motion Pictures.

   a. All official Navy motion picture coverage for OICC programs will be supervised by the News Photo Officer utilizing facilities of Combat Camera Group, U. S. Atlantic Fleet or U. S. Pacific Fleet (CCGLANT/CCG PAC), as appropriate.

   b. All unprocessed official U. S., Navy motion picture footage will be delivered to NAVFAC PAO NPC for processing and notification.

H. CONCLUSION. With the phasing out of the Command Information Bureau and the establishment of a permanent Public Affairs Office at OICC (geographical location) that office will assume the mission and responsibilities as prescribed for the CIB and additionally will perform as outlined in Annex C.

ANNEX A

ADVERSE INCIDENTS

1. PURPOSE. To promulgate policy and establish responsibilities for the efficient handling and release of information concerning personnel and units involved in a disaster.

2. POLICY.

a. The basic Public Affairs policy of the Navy is "to keep the public informed of the activities of the Navy as compatible with military security." Commanding Officers are responsible for the implementation of the public affairs policies and programs of the Navy Department and for the conduct of public affairs within their commands.

b. The timely release of unclassified information and other actions necessary to keep the public informed are mandatory in the event of any disaster occurring within the jurisdiction of the OICC (geographical area).

3. DEFINITION. Disaster in the context of this plan is considered to be any naturally caused or man-made incident which:

a. Causes personnel casualties, whether to military or civilian personnel, which results in death, being placed in a "missing" status, or injuries serious enough to require hospitalization.

b. Causes major damage or destruction to material.

c. Any other accident or incident which could be or could become the subject of press interest.

4. RESPONSIBILITIES. In support of the information policies of the OICC, (geographical location) the following specific responsibilities are delegated and assigned in the event of a disaster:

a. PUBLIC AFFAIRS OFFICER. The Public Affairs Officer (PAO) is responsible to the OICC (geographical location) for all public affairs aspects of the disaster including the release of pertinent information, liaison with news media representatives and the next-of-kin and other relatives who approach the command in search of information. He will take the necessary actions to keep the OICC and higher authorities (CHINFO - BUPER PAO) continually informed concerning the informational aspects of the disaster.

In the event that civilian relief organizations (Red Cross, Salvation Army, etc.) are needed to assist in relief operations, he will establish and maintain liaison with the information representatives of those organizations.

The PAO will be the sole releasing authority for all information and as such will coordinate all reports relative to the disaster. Time and physical circumstances permitting, he will clear all major announcements or releases of information, prior to public dissemination, with the OICC.

He will, with the assistance of other OICC personnel, take the actions necessary to fulfill his responsibilities. These might include the establishment of a Press Information Center, Next-of-Kin Lounge, Press Transportation Pool, etc.

b. SECURITY OFFICER. The Security Officer will ascertain at the earliest possible moment the security implications of the disaster relative to the release of information and access of newsmen to the scene and communicate his findings to the PAO. He will maintain constant liaison with the PAO to provide continuous security guidance. He will, if possible, accompany the PAO press to the scene of the disaster and be present at all press briefings or conferences. If the security officer cannot be present he will send a suitable representative.

c. DISASTER OFFICER. The officer designated as the Disaster Officer in charge of relief operations at the disaster scene will provide the PAO with assistance in obtaining information for release and in providing access to the disaster scene for media representatives at the first opportunity. It is important that this officer provide a continuous flow of pertinent information to the PAO for subsequent release. The containment of a fire, rescue of trapped personnel, removal of all the dead and injured, etc., are the types of information which must be immediately conveyed to the PAO or his representative.

d. PERSONNEL OFFICER. The Personnel Officer will maintain close liaison with the PAO to facilitate the release of casualty lists in accordance with existing directives. He will immediately inform the PAO when receipts from next-of-kin notifications have been received. In addition, the personnel officer will provide such personnel services as may be required by the PAO to properly augment his staff with clerical help, escorts, messengers, drivers, etc.

e. TRANSPORTATION OFFICER. The Transportation Officer will provide as feasible, on a not to interfere with relief operations basis, vehicles necessary to meet the transportation requirements of the PAO in meeting his responsibilities.

5. Other personnel who may be directly or indirectly involved in the disaster should be reminded that the PAO is the designated releasing authority for all information concerning the disaster. They should not engage in interviews, volunteer information, or otherwise communicate with media representatives except to provide normal courtesies such as directions or general instructions. If an individual feels he is the holder of information pertinent to the disaster he should convey that information to the PAO for coordination and release.

6. Initial release on an accident or other serious emergency will contain the following information (if available).

a. Statement that accident or emergency has occurred.

b. Location and time of incident.

c. Biographical information of persons involved (subject to requirements on notification of next-of-kin).

d. Type of equipment involved (if applicable).

e. Facts of the mission in which the personnel and/or equipment were engaged. (Full facts should be given within the limits of security).

f. Statement that a Board of Inquiry is/will investigate the accident.

g. If pertinent, information that this is an initial release and that further information will be released when available.

7. A sample check-list for Public Affairs Office action in connection with a serious accident or emergency will be found on the following pages.

SERIOUS ACCIDENT OR EMERGENCY

CHECK-LIST

(Name of Command)

1. Date_____ Time_____

2. Nature of accident_____

_____

_____

Fire involved?_____

How serious?_____

Explosion involved?_____

Expected?_____

Nuclear material involved?_____

Continuing danger?_____

Need for evacuation?_____

Should spectators be kept away?_____

3. Location_____

On base/off base?

4. Officer in command and/or chief of staff/executive officer notified?_____

By whom?_____ Time_____

5. Public Affairs Officer notified?_____

By whom?_____ Time_____

6. Public Affairs Officer of_____(next senior authority in chain of command) informed?_____

If done, by whom?_____ Time_____

If not considered necessary, why?_____

7. Other commands which may receive media queries on accident.

Name_____ Informed?_____

By whom?_____ Time_____

Name_____ Informed?_____

By whom?_____ Time_____

Name_____ Informed?_____

By whom?_____ Time_____

8. PAO representative at scene of accident_____

Name_____ Time of arrival_____

9. Casualties (If more space needed, attach roster).

a. Killed

	No. 1	No. 2
(1) Name	_____	_____
(2) Rank	_____	_____
(3) Service	_____	_____
(4) Home	_____	_____
(5) NOK	_____	_____
(6) Notified	_____	_____

b. Injured

	No. 1	No. 2
(1) Name	_____	_____
(2) Rank	_____	_____
(3) Service	_____	_____
(4) Home	_____	_____
(5) NOK	_____	_____
(6) Notified	_____	_____
(7) Extent of injuries	_____	_____

c. Where have injured been taken?_____

_____

10. Major property involved:

a. Government_____

(1) Damage_____

_____

(2) Identification numbers of aircraft or vehicle involved:

_____

b. Private

(1) Distance to nearest civilian property?_____

(2) Damage_____

(3) Owner_____

(Attach additional list if necessary.)

11. Alert news media of accident. (Attach message.)

Media	Person Contacted	Time/Date

12. Media representative(s) at scene:

Media	Name

13. Interim release #1 (attached) furnished_____
(time/date)

Media	Name

14. Interim release #2 (attached) furnished_____
(time/date)

Media	Name

15. Final release (attached) furnished_____
(time/date)

Media | Name

16. Unusual occurrences:

17. File made of this check-list, notes of pertinent comments made, any clippings or correspondence of importance and any other material of value for permanent record and/or guidance in conduct of future similar situations.

18. Action completed (time/date)_____

Signed_____

TAB A

EQUIPMENT

1. Equipment in this TAB will be required for the operation of OICC CIB and is required at CIB no later than (D-45) until completion of the program. Following is a listing of equipment together with the quantity required for each size program (Large, medium and small).

Item	Large Program	Medium Program	Small Program
Desk, double pedestal	1	1	1
Desk, double pedestal, with typing well	5	3	1
Cabinet, file, 4-drawer, bar lock	1	1	1
Cabinet, file, 4-drawer	4	3	2
Table, library, 3'x6'x2'	1	1	1
Table, small, 18"x36"x24"	1	1	1
Chairs, arm, on casters	4	3	1
Chairs, typist, on casters	2	1	1
Chairs, straight	4	3	2
Typewriter, manual	2	2	2
Typewriter, electric	2	1	1
Sharpeners, pencil	1	1	1
Wastebasket, round, tall	6	4	2
Rack, Clothes	1	1	1
Stapler, hand	4	2	1
Punch, 3-hole, adjustable	1	1	1
Punch, 2-hole	1	1	1
Boards, clip, 2-hole	4	3	2
Scissors, paper	6	4	2

TAB A (Cont'd)

Item	Large Program	Medium Program	Small Program
Camera, 4 x 5 Speed Graphic (with 12, 4 x 5 holders)	1	1	1
Camera, 35mm (with self contained light meter)	2	1	1
Camera, 2¼ x 2¼ reflex type	1	0	0
35mm editor	1	0	0
Carrousel Trays, 35mm	6	4	2
Projector, Carrousel, 35mm	1	1	1
Photo release stamp	1	1	1
Magnifying glass	1	1	1
Light meter (for use with 4x5 camera)	1	1	0
Camera, Aeroflex BL 16	1	0	0
Tripod, aeroflex	1	0	0
Tape recorder, Nagra	1	1	1
Camera, Bell & Howell, 3 lens 70D	1	0	1
Tripod, Bell & Howell 70D	1	0	1
Projector, 16mm	1	1	1
Light meter	0	0	1
Screen, projection 42"	1	1	1
Splicer, 16mm	1	0	0

TAB B

CONSUMABLE SUPPLIES

1. The following supplies in the quantity indicated will be required upon establishment of the OICC (_____) Command Information Bureau.

Item	Large Program	Medium Program	Small Program
Ash Trays	6	4	2
Pencils, wooden No. 2	6 doz	4 doz	2 doz
Binders, 3-ring	6	4	2
Pen set, desk with holder	6	4	2
Pens, ball point	12	8	4
Staples, standard size	4 boxes	3 boxes	2 boxes
Dispenser, Scotch Tape, large roll 1" size	2	1	1
Scotch Tape, 1", 500-ft roll	6	4	2
Rubber Bands, medium size	3 boxes	2 boxes	1 box
Clips, paper	12 boxes	8 boxes	4 boxes
Bowls, glass, for paper clips	6	4	2
Paper, Bond, White, Type III 25% rag, 8x10½, 500 sheet reams	8	6	4
Envelopes, White, franked, 3x9 500 ea. box	2	1	1
Envelopes, Manila, franked, 9x11, 1000 ea. box	1 box	1 box	1 box
Pads, scratch, 5x7', paper	12	8	4
Pads, paper, lined, 8x10½"	12	8	4
File Folders, letter size, 1st, 2nd, 3rd cut	200	100	100
Baskets, desk, wood or metal	12	8	4
Film, black and white, 4x5	100 pkgs	50 pkgs	0
Film, Negative color, 4x5	25 pkgs	10 pkgs	0
Film, Positive color, 4x5	10 pkgs	5 pkgs	0
Preservers, Negative, 4x5	200	100	0

TAB B (Cont'd)

Item	Large Program	Medium Program	Small Program
Film, 35mm, Black and white Tri-X, 20 exp	50 rolls	25 rolls	50 rolls
Film, 35mm, High Speed Ektachrome	50 rolls	25 rolls	50 rolls
Film, 35mm, Kodachrome II	20 rolls	10 rolls	20 rolls
Film, 35mm, Infrared	10 rolls	0	0
Preservers, negative, 35mm	300	200	100
Film, 16mm, Color 7552, 400-ft roll	12 rolls	0	0
Film, 16mm, Color 7552, 100-ft roll	100 rolls	0	100 rolls
Lamp, projection, 35mm carrousel	3	2	2
Lamp, projection, 16mm	2	1	1
Lamp, exciter, 16mm projector	1	1	1
Tape, magnetic, ¼", five inch reel	50	25	25
Tape, magnetic, ¼", two inch reel	50	25	25

2. Normal consumable supplies will require replenishment on a routine basis.

ANNEX B

SECURITY

1. Both public information and security are command responsibilities and often confront the command with contradictory alternatives. The public information policy of the Navy requires delicate accommodation between two competing values. Effective security is essential to protect information classified in the interests of national defense. In cases where the need for clearance is in doubt, coordinate material with the security officer.

2. Since there is no censorship of the United States press or of other media of public information, it is especially necessary that protection of classified information be a command responsibility. While security is a direct responsibility of the Director of Naval Intelligence and the Chief of Information, all commands will retain responsibility for security within their respective jurisdictions.

3. The doctrine of "Security at the Source" will be emphasized and rigidly enforced.

4. The Officer in Charge of Construction (geographical area) has military, administrative and technical control of the construction program and is responsible for the security measures established for all phases of construction as applicable.

5. The conduct of Navy public affairs often approaches the limits of classified information. In such cases any action taken must be done expeditiously and properly, but not carelessly or ineptly. Short of that, serious damage can result to national security.

6. Although the paramount consideration is that of safe-guarding classified information, officers in command and others concerned with the release of information will bear in mind that undue delay in releasing information or unreasonable refusal to formally release information already generally known has an adverse effect on the Navy's public affairs effort, inconveniencing and therefore, alienating individuals who otherwise might favorably support the Navy.

7. Security regulations and guidance are set forth in the Department of the Navy Security Manual for Classified Information (OpNAVINST 5510.1C) and in pertinent instructions issued from time to time by the Secretary of Defense, the Secretary of the Navy and the Chief of Naval Operations. Officers in command and their public affairs officers must be thoroughly familiar with these regulations and instructions.

8. No naval command or officer in command will resort to unauthorized classification of information, or too rigid interpretation of the phase "as compatible with military security," in an attempt merely to avoid controversy or to prevent release of information which may be embarrassing or unfavorable to the Navy.

Photographic Security

1. The classification and release of photography, still or motion, including aerial photography and the disclosing of pertinent detailed information of a classified nature will be governed by the security classification of the subject photographed.

2. Personal cameras of naval personnel will be permitted aboard naval shore establishments, ships and aircraft only as authorized by the officer in command. If personnel are authorized to take photographs, officers in command will insure they do not reveal classified matter.

3. Officers in command may screen all photographs taken by naval personnel with personal cameras within the jurisdiction of naval commands at times of emergency, disaster or combat action. Such photographs will be handled as official Navy photographs, but unclassified negatives will be returned to the individual after processing and distribution have been accomplished.

4. Visitors will not be allowed to take photographic equipment on board a naval ship or aircraft or into a naval establishments or to take photographs within a naval jurisdiction unless specifically authorized by the officer in command, or high authority.

5. Whenever a civilian photographer is authorized to take photographs within a naval jurisdiction, a commission officer will be assigned as a consultant to the photographer, to prevent disclosure of a classified matter.

6. If not certain that photographs taken by a civilian photographer within a naval jurisdiction are unclassified, the OIC, CIB or his designated representative will review all photographs taken. Such photographs as may be determined to be classified will be assigned an appropriate classification and forwarded, with all negatives and copies to the NAVFAC PAO for transmittal to the Chief of Information. All such negatives and prints will remain under naval jurisdiction until officially released.

The security provisions pertaining to photographs will be equally applicable to the work of artists, sketchers and draftsmen.

Requests by Media for Review

1. Officers in command will assist media representatives who request that material be reviewed for security or other reasons prior to transmission for publication. Such review will be accomplished locally, if possible, and as expeditiously as circumstances permit, according to the following guidelines.

a. Material will be carefully screened to prevent disclosure of information classified for reasons of military security.

b. No attempt will be made to edit or change any material simply because it may be critical of the Navy.

c. The attention of correspondents will be invited to inaccurate statements of fact, but these will not be deleted or altered without the express concurrence of the originator in each instance.

ANNEX C

OICC PUBLIC AFFAIRS OFFICE

1. INTRODUCTION. The mission and objectives as set forth in the OICC Command Information Bureau plan will be applicable to the operation of a permanent public affairs office within OICC (geographical location).

2. RESPONSIBILITIES. The public affairs officer is responsible directly to the OICC and will act as advisor to the OICC on public affairs matters, and will function on the personal staff level.

3. The public affairs officer will keep the OICC, Deputy OICC and other appropriate officers advised on public affairs matters.

4. In carrying out his responsibilities, the public affairs officer will:

a. Represent the command in public affairs matters.

b. Administer relations of the command with the public.

c. Prepare and conduct a public affairs program, including community relations and internal relations for the command.

d. Maintain liaison, as appropriate with the District Public Affairs Officers of Naval Districts, with public affairs officers of fleet activities, and with information officers of the U.S. Army, Air Force, Coast Guard, and Marine Corps commands in the area. The personnel and facilities of the public affairs offices of senior naval commands will be utilized whenever it is necessary to carry out projects beyond the capacity of the immediate command.

e. Keep senior officers of the command advised of current public affairs trends, problems, and potentialities, and of directives concerning the release of information and other public affairs policies.

f. Be alert to possibilities for improvement of the Navy's and the Naval Facilities Engineering Command's public affairs program within the command.

g. Arrange for adequate public information coverage, including photographic coverage, of all noteworthy events and activities.

h. Forward to the Public Affairs Officer, Naval Facilities Engineering Command Headquarters appropriate news material, including:

(1) Releases and other news material originating in the command, especially priority reporting of unexpected happenings of possible national and international interest or acute local interest.

(2) Press clippings appearing in local media which are of sufficient importance to interest the Secretary of the Navy and/or the Chief of Naval Operations. Material should be airmailed to the Chief of Information (OI-210), with a copy to the Public Affairs Officer, Naval Facilities Engineering Command Headquarters, on the day it appears. Reproduction by photostatic, electrostatic or other processes is acceptable. Clippings should be identified as to source and date.

i. Prepare and disseminate to the command and to the public, through appropriate channels, information regarding OICC (geographical location) accomplishments.

j. Coordinate and disseminate within the command public information material from official sources.

k. Submit to the Fleet Hometown News Center, on all newsworthy occasions, appropriate news material on, and photographs of, officers and enlisted personnel attached to the command.

1. Direct personnel, military and/or civilian -- assigned to his office and conduct on-the-job training.

m. Assist in the preparation and maintenance of an up-to-date history of the command (as required by OPNAVINST 5750.12 (series)), and file of current official photographs

n. Conduct research for and maintain a file of speech material and administer the command's speech program.

o. Maintain files of source material concerning personnel and activities within the command. Such material would include news media inquiries and answers thereto, news releases, photographs, biographies of principal officers, and command histories.

p. Act in an advisory capacity to editors of command's newspaper or other internal publication.

q. Submit, and encourage personnel to submit, articles, or outlines for them, to the Public Affairs Office, Naval Facilities Engineering Command Headquarters for offering to the national media.

5. To aid the Public Affairs Officer in performing his assigned mission and in fulfilling his responsibilities it is essential that the following reference books be maintained in the office:

a. U.S. Navy Public Affairs Regulations (NAVSO P-1035, Revised 12-65) future changes to it, and other pertinent directives.

b. A standard dictionary.

c. Navy Information Policy Summaries.

d. U.S. Navy Regulations.

e. Department of the Navy Security Manual for Classified Information (OPNAVINST 5510.1 (series)).

f. Standard World Atlas.

g. Current World Almanac.

6. The following books and periodicals are suggested for public affairs office, in addition to those listed in paragraph 5 above.

Navy Speakers Guide

Journalist 3 & 2 Manual (NAVPERS 10294)

Journalist 1 & C Manual (NAVPERS 10295)

Manual of Naval Photography (OPNAVINST P-3150.6)

Photographer's Mate 3 Manual (NAVPERS 10373)

Photographer's Mate 2 Manual (NAVPERS 10374)

Photographer's Mate 1 & C Manual (NAVPERS 10375)

An encyclopedia

Roget's Thesaurus

Bartlett's Familiar Quotations

Armed Forces News Style Guide (NAVEXOS P-2456)

PROPOSED

DEPARTMENT OF THE NAVY
NAVAL FACILITIES ENGINEERING COMMAND
WASHINGTON D. C. 20390

From: Commander, Naval Facilities Engineering Command
To: Engineering Field Divisions and Assistant Commanders

Subj: Establishment of NAVFAC Special Technical Assignment Roster (STAR)

End: (1) STAR Questionnaire

1. After successful use of the above roster as a means of providing qualified personnel for short-term and long-term duty in connection with the Viet Nam conflict, we are again generating use of the roster for similar use. The fundamental purpose of the roster is to provide a roster of well qualified civilian professionals in the areas of planning, design, construction, maintenance, real estate, housing, computer applications, and other administrative support personnel. Nominees for the roster would be available on either temporary duty or employment agreement bases for critical professional requirements in overseas locations or as members of task groups established for problem solution either overseas or stateside.

2. To set up the roster on an active basis, for use when needed, I ask you now to take immediate action to review, screen, and recommend professional personnel of your organization for placement on such a roster. The objective is to have approximately ____ well qualified professionals listed. To achieve this goal each activity is being given a specific quota based on the population of its organization as related to the total NAVFAC professional complement. Your quota is established at ____ Instead of soliciting volunteers to achieve your quota, you are to select those personnel who, in your estimation, meet highest standards of performance in their assigned work and contact them on a personal basis to ascertain their willingness to accept the kind of critical assignments outlined above. In discussion with those who are being considered, you should emphasize that their selection for participation in emergency programs should be regarded as recognition of their capabilities and that such recognition can well be a selective factor for promotion under the Command's Career Plan for Civilian Professional Personnel. This roster should be regarded as made up of premier performers in their respective fields. While it is desirable that those selected be your most experienced personnel, covering a wide range of fields, the overriding selection criteria are quality and attitude. The roster is seen not only as a means of insuring the availability of a wide range of skills to meet emergency requirements, but also as a means of pooling our talents over the long-range. Selections for specific assignments will not be made without considering the needs of the individual and his employing organization at that time.

3. Enclosure (1) should be completed for each person selected and submitted to Code ____.

SPECIAL TECHNICAL ASSIGNMENT ROSTER
(STAR)

NAME _____ DATE OF BIRTH _____

POSITION TITLE _____ ACTIVITY _____

Willingness to accept special assignments in the following areas:

LOCATION	UNDER EMPLOYMENT AGREEMENT		UNDER TEMPORARY DUTY (For 2 to 6 months)	
	YES	NO	YES	NO
Africa and Mid East				
CONUS				
Europe				
Philippines				
Thailand				
Viet Nam				
Other Areas				

List specialties for which qualified:

PROPOSED

NAVFACINST 12410.
FAC-01P/WHB: ejp

NAVFAC INSTRUCTION 12410.

From: Commander, Naval Facilities Engineering Command To: Distribution List

Subj: Employee Mobility

1. Purpose: To advise employees of the need for staff mobility to cope with special mission requirements placed upon the Naval Facilities Engineering Command; to require understanding of this need on the part of professional employees accepting employment to NAVFAC organizations; and to emphasize recognition of mobility as a component of qualitative factors contributing to individual career development.

2. Background: Mission assignments of this Command place special demands for rapid build up of staffs of specialists to accomplish assigned work in difficult environmental or operational situations. Current examples of organizations established under such circumstances are the OICC, RVN and OICC, Thailand. These organizations represent, especially in their formative days, and early years, the utmost test of the capability of NAVFAC to accomplish one of its primary missions, construction. Logistical, timing and environmental problems involved, and the need for development of solutions to them, test the mettle of the organization to the fullest. To respond well the most experienced, capable and creative members of the organization must be available as members of the on scene response teams, wherever that scene may be.

3. Policy. To foster NAVFAC capability to respond to the most difficult tasks that may be assigned for accomplishment, all NAVFAC organizations recruiting personnel into positions for which possession of a college degree or equivalent experience, is an entrance requirement will assure that:

a. Candidates understand that mobility is expected of employees whenever such mobility is required to meet needs of the organization. Every opportunity will be sought at the same time to utilize the assignment as a means of advancing the employee's career objectives. Opportunities for service in such special assignments will be granted first to employees who are qualified whose qualifications will be advanced by the performance of the assignment, and who voluntarily accept assignments. However, for certain specialized needs involving unusual skills requirements, influence of location, and other factors, employees may be designated to accomplish short-term and long-term projects.

b. Placement and promotion actions provide for positive consideration of the breadth of an employee's experience, as demonstrated by his acceptance of assignments involving mobility, in the evaluation process.

NAVFACINST 12410.

4.Action. Activities are requested to carry out the policy outlined above in all recruitment and accession contacts arid actions. Activities are further requested, through appropriate media to publicize career advancement of employees whose mobility, or acceptance of special assignments, serve to point up the value of mobility to the organization and the individual employee.

Distribution:
SNDL FKN

Copy to:

Proposed Letter to be sent to project sponsors to establish Liaison billets in OICC DIRCON Offices and Construction Offices

From: Commander, Naval Facilities Engineering Command
To: (Appropriate Sponsor)

Subj: Officer in Charge of Construction; Staffing of

Encl: (1) Job Description; Sponsor Representative

1. The Navy has been designated by the Department of Defense as the construction agent for (Location; area, country or region). In order to carry out assigned construction responsibilities of office of the Officer in Charge of Construction, (location) is being established to administer all construction contracts within (Location; area, etc.).

2. In order to effect close liaison with construction project sponsors, and ensure timely response to their requirements, we are requesting each sponsor to assign one or more personnel to the OICC to act as liaison officer/s and project coordinator/s for the sponsor. The position or billets are to be located in the project management office of the OICC, and; where considered necessary, in area directors' offices.

3. The type of personnel to be assigned is optional; however, a graded individual or officer with experience in construction management and/or contract administration is desirable. Requests to establish positions and/or billets on the staff of the OICC should be addressed to the Chief of Naval Operations, via the Naval Facilities Engineering Command. (Individual's Name) of the Naval Facilities Engineering Command (Code) has been designated as action officer to coordinate and assist sponsors in

establishing positions on the OICC. You are invited to have your personnel representative contact him for any assistance which may be required in establishing a position for your representative on the staff of the OICC, if deemed necessary or desirable.

DRAFT OF JOB DESCRIPTION

FOR SPONSOR PROJECT COORDINATOR BILLET/POSITION

1. Location. The position is located in the Program Management Office of the Officer in Charge of Construction (Location)

2. General Responsibilities. The incumbent acts as the representative of the sponsor agency on all projects administered by the OICC for that agency. He maintains close liaison between the OICC and sponsor, and ensures a continuous interchange of all management information necessary to ensure the timely and appropriate response by the OICC and the contractor to the sponsor's construction requirements.

3. Specific Duties.

A. The incumbent monitors progress of all projects sponsored by his parent agency, and periodically advises his agency and the OICC of progress, delays, and changes in estimated milestones.

B. The incumbent present requests for required contract changes to the OICC on behalf of the sponsor, and ensures that necessary funds, materials, and time is identified to execute the change.

C. The incumbent assists the OICC in identifying future year construction requirements of the sponsor, and ensures their inclusion in the OICC workload plans.

D. The incumbent acts as "trouble shooter" on the sponsor's projects, and assists, as necessary, in such areas as material, procurement, equipment scheduling and contractor manpower allocations.

CHECK LIST OF ACTIONS
FOR
EMPLOYING INDIGENOUS & THIRD COUNTRY NATIONALS

1 Review OICC Organization charts and functional statements to determine positions which can be staffed with indigenous and/or TCN personnel.

From a functional standpoint, indicate positions which can be filled as follows:

With either indigenous or TCN personnel.
With only indigenous personnel.
With only TCN personnel.

2 Coordinate with appropriate section of U. S. Embassy to establish check list of agreements and regulations pertaining to employment of indigenous and/or TCN personnel.

Appoint liaison officer for contacts with U. S. Embassy.

Arrange for labor advisor specialist.

3 Prepare check list of local laws and obligations to be conformed with for indigenous personnel.

Make analysis of extent permitted by U.S. law and regulations of the military departments.

Where special agreements are required, coordinate with higher authority.

4 Prepare check list of local laws and obligations together with residency and customs requirements for TCN personnel.

Make analysis of extent permitted by U.S. law and regulations of the military departments.

Where special agreements are required, coordinate with higher authority.

5 Ascertain funds applicable and available for employment of indigenous and/or TCN personnel.

Review foreign exchange and IBOP requirements and criteria.

6 Prepare position descriptions for indigenous and/or TCN personnel.

Determine whether local schedule of wages is applicable or whether special schedule needed.

Make provision for consideration of local customs and practice.

7 Establish procedures for recruitment of indigenous and/or TCN personnel.

PROPOSED MEMORANDUM FOR THE CHIEF OF NAVAL PERSONNEL

MEMORANDUM FOR THE CHIEF OF NAVAL PERSONNEL (Draft)

Subj: Exception to Standard Overseas Tour Length; request for

Ref: (a) BUPERSINST 1300.26D (or superceding inst.)
(b) DOD Direction Number 1315.7 of April 63 (or superceding instruction)
(c) OICC (Country) implementing Directive

1. Reference (a) establishes standard unaccompanied tour lengths for Naval Personnel stationed in (country) at (no.) months. Reference (b) outlines DOD policy with regard to tour lengths for all services at various overseas locations. By reference (c) CNO established the OICC, (country) to administer the Navy and (other services/agencies) construction program within the theater of operation.

2. Past experience, principally in the Republic of Vietnam contingency has shown that the (No.) months tour length imposed by reference (a) does not provide a long enough tour length for certain key personnel in positions requiring a high degree of continuity and working knowledge of underway projects for effective operation. Experience has shown that under field conditions the amount of time required to learn all that is required of these positions is such that a full 6 to 8 months is required to approach peak operating efficiency.

3. Accordingly, it is requested that standard tour lengths for the below listed billets be temporarily waivered, effective immediately, and that a change be sought to reference (b) which would designate (No.) months as the standard tour length for personnel assigned in the listed billets.

ORGANIZATION

BSC	BILLET TITLE	DESIG/GRADE

SUGGESTED ITEMS OF ADDITIONAL BENEFITS

All or part of the benefits listed may be selected, dependent upon the additional length of tour actually utilized, working conditions, normal benefits, and the existing political climate at the time of request.

Item No.	Approval Level	Suggested Benefit
1	DOD	Provide overseas housing in nearest safe area for dependents of personnel on extended tours, if conditions will not permit actual accompanied tours. Similar to AID "Safe Haven" concept utilized during RVN contingency.
2	-	Provide monthly "visitation rights", such as a four-day weekend, to families for personnel assigned "in-country". Navy For military personnel. State Dept For civilian personnel, visitation rights for civilians would require use of annual leave for days falling during the normal workweek.
3	-	Provide guaranteed annual leave of 15 days to be taken out of country, with Government furnished transportation for entire family to anywhere in the world. Let member accrue unused leave above that which is normally left "on the books".
	DOD	For military personnel.
	Civil Service Commission/ Congress	For civilian personnel, locale of construction would determine applicability of use of home leave for this purpose. Overseas employees have opportunity at present to accumulate 45 days as opposed to 30 days annual leave to employees serving stateside. Legislation would be required to expand 45 day limitation.
4	Congress	Provide 100% tax exemption on all pay earned during tour, plus combat pay and Cost-of-Living allowances, if applicable.

5	Navy	Provide, to the maximum extent feasible, living and working accommodations compatible with longer residence, i.e., private, clean, air-conditioned, and well- furnished.
6	-	Provide privileges for use of telephone calls to dependents. establish priority which will ensure placing and completion of calls.
	Navy/ DOD	For "free" use by military personnel. (For civilian personnel, overseas allowances established for the area include costs of utilities as a basis for establishing the allowance).
7	Congress	Provide for "free" mailing of personnel gifts up to 100 pounds in weight.
8	Navy	Eliminate "rationing" of in-country items.
9	Navy	Strengthen employment rights for overseas employees returning to stateside, and give civilian employee maximum personal choice of specific reassignment after completing extended, unaccompanied tour.
10	Navy	Provide Class "A" vehicle while in-country.
11	Navy	Provide steward for military personnel with rank of CAPT and above. (Allowances granted to civilian employees overseas consider need for domestic support in areas where that is customary or required)

LABOR SITUATIONS IN SPECIFIED AREAS

A. UNDER COGNIZANCE OF LANTDIV

1. Iceland. Population of Iceland 200,000 about 50% of which is located within a 50 mile radius of the capitol city of Reykjavik. There are about 8,000 construction workers, of which about 50% are skilled craftsmen and the remainder are unskilled laborers. About 200 skilled laborers are qualified equipment operators.

   The currently effective U.S. - Iceland inter-government agreement requires that only Icelandic contractors designated by the Iceland government perform work for the U. S. There are only two such indigenous contractors designated at this time, but it is possible that additional firms would be so designated if the yearly WIP requirement were to exceed the present 16-18 million dollar per year capability.

   Foreign nationals may be brought in only as sub-contractors to the Icelandic contractors, and then only when the required expertise is not available in the indigenous population. The rapid accomplishment of a large volume of work would probably require re-negotiation of the U.S. - Iceland agreement to permit additional contractors to participate. Construction costs in Iceland are approximately 300% of the costs for comparable work in the Eastern U. S.

2. Morocco. The construction labor market in Morocco is well established but not on the same scale as in Spain. Available skills are capable of handling up to a small program, but would require Tech Reps on complex mechanical and electrical installations.

   There are heavy construction equipments and operators in Morocco, but for any program over a small one, importation of equipment operators and maintenance personnel would be required.

3. Indian Ocean Area. There are numerous islands or island groups in the Indian Ocean area, some of which are independent nations, and the remainder of which have political and/or economic ties to other nations. Little is known of these entities as related to the construction capabilities of the indigenous populations other than a general statement to the effect that the capabilities vary from non-existent to very limited. The importation of personnel and equipment is a probable requirement at any of the islands, including perhaps even some unskilled labor.

There are a number of highly capable contractors located in the principal cities of nations on the mainland of Africa as well as Pakistan, India and Ceylon, and several U.S. firms (Philco-Ford and Pan Am in particular) have worked in the area and have familiarity with conditions and solutions to problems connected with organizing for, and executing, facilities construction.

Nairobi is the headquarters of all the important foreign and local firms for all of East Africa, including insurance, banking, A/Es, contractors, material suppliers, etc. Mombasa, the largest port on the coast of East Africa, is capable of accommodating ocean going vessels and has adequate off-loading and storage facilities. Both are linked by air and rail, and Mombasa Airport is capable of handling commercial jet aircraft. Because of these many advantages, consideration should be fiven to the establishment of an OICC/ ROICC office in the Nairobi/Mombasa complex for the administration of any facilities construction in the Indian Ocean area.

4. Spain. The construction market in Spain is well established and highly capable of handling all programs up to and including a large program. The indigenous labor is capable of handling all construction installation and maintenance except for complex mechanical and electronic installations which require technical representatives for installation supervision and other operating tests.

   Construction could be accomplished using various existing Spanish contractors (see Attachment for categories of work and size of construction force) who are well established and highly experienced in all types of construction.

   The established contractors have a wide range of heavy construction equipment and equipment operators. There is also heavy construction equipment available from the Ministeno de Obras Publicas (Spain's Ministry of Public Works), on a rental basis.

   The only significant labor regulation is found in the current U.S. - Spanish Base Rights Agreement and concerns the use of third country nationals. As a general rule, employment of third country nationals is permitted only when the local Spanish labor market cannot provide a specific skill, or there is an inadequate number of a specific skill necessary to accomplish a job.

LIST OF SPANISH FIRMS WITH MORE THAN 500 WORKERS

NO.	FIRMS AND ADDRESSES	TYPE	NO. WORKERS
1.	AGROMAN, S.A. Pza. Tirso Molina, 5	General Constr.	7,180
2.	ENTRECANALES Y TAVORA, S. A. Juan de Mena, 8	General Constr.	6,235
3.	DRAGADOS Y CONSTRUCCIONES Avda. de America, 32	General Constr.	4,910
4.	URBANIZADORA Y CONST. URBIS, S.A. Menendez Pelayo, 71	General Constr.	3,450
5.	CIA. FF.CC. de M.Z.O.V. Velazquez, 47	Civil Works	1,885
6.	GIRALT LAPORTA, S.A. C^{a} Getafe, 6 (Villav. Alto)	Glass	1,845
7.	HUARTE Y COMPANIA, S.A. Union Española Explosivos	Civil Works	1,690
8.	CNES. COLOMINA G. SERRANO San Bernardo, 97	General Constr.	1,500
9.	HIDROCIVIL, S.A. p^{o} Calvo Sotelo, 29	Civil Works	1,430
10.	SACONIA, S.A. Alcala, 1	General Constr.	1,425
11.	VALLEHERMOSO, S. A.	General Constr.	1,410
12.	CNES. SAN MARTIN, S.A. Carrera S. Jeronimo, 36	General Constr.	1,145
13.	CONSTRUCCIONES J.O.T.S.A. Velazquez, 157	General Constr.	1,040
14.	FOMENTO OBRAS Y CONSTRUCCIONES Fernan Gonzalez, 29	General Constr.	990
15.	CONSTRUCCIONES Y CONTRATAS, S.A. Federico Salmon, s/n	General Constr.	985
16.	BERNAL PAREJA, S.A. Eloy Gonzalo, 27	Civil Works	980
17.	Besante del Rio, Ramon Alcala, 35	General Constr.	950

NO.	FIRMS AND ADDRESSES	TYPE	NO. WORKERS
18.	S. A. T. O.	Civil Works	940
19.	Beamonte del Rio, Ramon Alcala, 35	Central Constr.	910
20.	ESTACIONAMIENTOS SUBTERRANEOS Avda. del Generalisimo, 8	Civil Works	825

LABOR SITUATIONS IN SPECIFIED AREAS

B. UNDER COGNIZANCE OF PACDIV

1. Thailand. In general, the Thai labor force is considered to be capable in all areas of construction activities and to be of sufficient size to support a large scale--$100 Mil plus per year--construction program. This capability is basically the result of experience gained during the U.S. MILCON and commercial construction boon underway since 1963-64. In 1967-68 during the peak of this construction period, 9,000 Thai employees worked for the CPAF contractors, 4,000 worked for local fixed price contractors engaged in MILCON work while another 3,000-5,000 Thais were working for the Army/Air Force engineer troops. The exact size of the labor force working on commercial construction is unknown but is estimated at least equal to the MILCON fixed price contractor force of 4,000 persons.

   Generally, all construction trades and skills are represented within the Thai Labor force. However, due to the predominance of concrete and masonry vertical construction, road building, and airfield concrete paving, a sizable portion of the skills are concentrated in these areas. Even in these and other areas not mentioned specifically, hand labor is still used extensively in lieu of mechanized methods with the result being a somewhat slower pace of construction. Although this practice is now lessening, it has had the effect of reducing the number of available experienced equipment operators and equipment maintenance personnel. Lack of field supervisors has also been a problem often experienced with local contractors.

   The stability of the size of the labor force is questionable and will, of course, directly depend on the continued construction activity in-country. However, as experienced by the CPAF contractors, the local people are generally trainable and provide an easily expandable work force.

   Third Country Nationals represented approximately 1%-3% of the labor force working on U.S. MILCON projects during the peak years of construction. This low percentage indicates that Third Country National recruitment would not be necessary in order to accomplish large scale construction even of the $100 Mil per year range. It is believed, however, that a Third Country National supplement to the local labor force

would be beneficial in increasing productivity while reducing training costs.

The low ratio of Third Country Nationals mentioned above is indicative of the present Royal Thai Government policy restricting hiring of other than Thai workers rather than a result of competitive employment process. Under normal circumstances, hiring of Third Country Nationals can be accomplished only on a case-by-case basis requiring a lengthy process for approval. Restrictions on TCN employees are expected to increase in the future as legislation is now being prepared to ultimately prohibit Third Country National work permits.

One area that must be considered in any construction under- taken in Thailand is the close contact and working relation- ship required with the Royal Thai Government agencies. One of the more complex issues involved is the problem of taxes and duties on commodities either imported or purchased locally. Future development of contractors in-country will require familiarity on the part of an OICC with this and other background information, including the 1956 Inter-Government agreement, and require having the ability to operate in these sensitive areas.

2. Laos. In general, the capability of the Laos construction labor force is considered extremely limited. The tremendous increase in construction activity of recent years in adjacent countries has had little impact in upgrading construction skills and trades in Laos. Most buildings that have been constructed are less than five stories in height and have only rudimentary electrical and plumbing installations. Hand labor is used extensively resulting in a definite lack of heavy equipment and associated operators and maintenance personnel. It is estimated that only about ten local contractors currently exist who are capable of accomplishing construction to U. S. standards of even simple structures and facilities. This local contractor force, however, is frequently supplemented by Thai and other foreign firms.

   Of the existing skilled building and tradesmen, approximately 50 percent are Third Country Nationals. This supplemental labor force is considered a requirement for all construction except for the very small and simple projects. Current policy of the Laotian Government allows easy access into country for Third Country Nationals. However, it is believed that, in time, Governmental pressures favoring Laos employees will increase thus restricting use of Third Country Nationals.

3. Cambodia. As the U.S. is not currently doing construction work in Cambodia, information on the construction labor market is limited. However, based on previous work in Cambodia by OICC Thailand, the construction capability is considered to be similar to that in Laos. Most large construction jobs would probably be undertaken by Thailand construction firms, with skilled workers brought in from Thailand or the Philippines.

4. Republic of Vietnam. The capabilities of the Vietnamese construction labor forces has increased tremendously over the past few years, primarily as a result of the large training program initiated by the OICC RVN. The primary deficiencies are in the fields of management, particularly in the upper echelons of contractor organization, in dredging and harbor improvement work, and, to a lesser degree, the capability to accomplish large "flat work" types of projects such as airfields and road construction. In general, the capability to construct vertical projects is excellent, including the associated mechanical and electrical work.

   There are now some 950 construction contractors in the Republic, of whom approximately 40 have the capability of undertaking projects valued at $1,000,000 or over. Approximately 810 contractors have a capability to under- take projects not over $25, 000 in value, and the remaining contractors have capabilities falling between these values. It is anticipated that the capabilities of all contractors will continue to increase, particularly with respect to the deficiencies described above.

   Currently, specific skills in relatively short supply are in the fields of General Administration (Payroll, ADP, Accounting, etc.), Security, Procurement and Supply, Engineering, and Equipment Maintenance. Additionally, the structure of the society induces a reluctance to relocate from the home village or city to a distant job site, and this immobility may create local shortages of skills required for accomplishment of specific projects. This natural reluctance to move is compounded by restraints currently imposed by the Government because of military reserve requirements, security clearances, etc., and associated problems such as housing and transportation for workers and their families. All of these factors may require the importation of third-country nationals and/or a larger number of U.S. Nationals in order to obtain the capability to accomplish specific projects.

Employment of third-country nationals may create problems with the government of the Republic of Vietnam because of its interest in improving the skill of the Vietnamese labor force, and because of the impact of the international balance of payments since wages paid to foreigners may, in varying degree and amount, be transferred out of the country.

The acquisition, in recent years, of skills related to the operation of modern construction machinery had reduced the dependence on hand labor, although the "bucket brigade" is still a rather common sight. As contractors obtain the means to acquire modern equipment, it is anticipated that the percentage of unskilled labor on a specific project will continue to decrease, and contractor capability to undertake large complex projects will increase.

At a level of effort in the range of $150,000,000 per year and below, it is considered that the currently available labor force could meet most requirements except in the professional, technical, and higher level administrative areas. The necessity of importing third-country nationals in the future should be minimal and restricted to a few specialties, although other factors may affect the situation.

5. Guam/TTPI. Both the availability and skill of indigenous labor on Guam and in the Trust Territories are severely limited. All contracts of major importance require hiring of third-country nationals. The sources of these third-country nationals are the Philippines, occasionally Okinawa, and most recently, Korea. It is necessary to recruit third-country nationals for any size of contingency plan. Only 1,500 indigenous laborers are available for construction in the whole of the Trust Territory. It is estimated that less than 200 Guamanians are employed or available as construction tradesmen and laborers.

   The current laws for employing/recruiting third-country nationals are explained below for Guam and the Trust Territory:

   Guam - The recent Off-Shore Labor Agreement with the Philippine Government provides the U. S. Military and its civilian agencies, and contractors engaged in Government work, with a method for employing Philippine nationals. However, the status of this Agreement is in a state of flux, and it may be renegotiated shortly. A rise in the cost of Filipino labor will probably result in contractors employing

more Korean and Okinawan labor. Third-country nationals other than those under the Off-Shore Agreement must enter Guam under the H-2 program. Under this program, prospective employers must first submit their labor needs to the Guam Employment Service. Upon notification that labor needs cannot be filled with indigenous labor, the employer can then petition the U. S. Government for visas for temporary workmen. The visa is good for one year and can be extended to three years. Guam immigration authorities have recently been granted authority to approve these visas.

TT - Currently, the Congress of Micronesia is pursuing a vigorous program for training and filling all positions with Micronesians. A bill was recently enacted into law titled "Protection of Resident Workers Act,". This act sets up a Director of Labor who shall at all times keep on file, applications of indigenous workers in the different districts. After receiving a notice for employment from the prospective employer, the Director shall endeavor to fill the various positions with indigenous people, either through their applications, or by a fifteen day advertising period. If at the end of that period, positions are not filled by indigenous workers, the employer will be allowed to hire non-resident workers. A statement of repatriation must accompany the request for an entry permit for these non-residents. The entry permit is received from the immigration authority upon request, once approval to hire non-residents has been received from the Director of Labor. These permits are for 90 days, with possible extension to 180 days.

6. Republic of Indonesia. In 1968 the population of Indonesia was around 83 million persons. The work force of 33 million was distributed as follows:

Agriculture	61%
Mining, Manufacturing & Construction	10%
Transportation	3%
Government	6%
Other	7%

The unemployment ranged from 12 to 18% of the total population. There are some 200 islands covering approximately 2-1/2 million square miles and the movement of labor to employment sites is inhibited by an unwillingness to leave ancestorial villages and union influence. The distribution of land and people is as follows:

	Land	Population
Java	10%	65%
Sumatra	31%	15%
Borneo	36%	5%
Celebes	13%	7%
Other	10%	8%

Principal assets are land, minerals and unskilled labor. Unions act against foreign influences. Lumber, sand, gravel and brick are in good supply, however, cement requires import.

Java in 1956 had a general surplus of unskilled labor among its 52 million inhabitants. This is one of the most heavily populated major areas of the world with a density of 1,400 sq. mi. Labor is exported to other areas of the archipelego. The production standards are low and the economy is basically agricultural.

Sumatra had in 1956 a population of 12 million and generally had a shortage of all but unskilled labor. The labor supply varies greatly according to locale. Most of the dependable skilled labor is found among those of non-native background (Chinese, Malayan, Indian and European) and have been organized into unions. Some of the unions are Communist dominated. The local unskilled are docile and disciplined to work and produce steadily.

The Celebes complex has an estimated population (1957) of 7 million principally engaged in agriculture. There is a shortage of skilled labor and the productivity is low.

There is no data available for the Borneo complex.

7. Federation of Malaysia. Malaysia as reported here consists of two geographical areas: Malaya and Singapore in South- Western Asia and Malaysia--Brunei in the East Indies.

   Malaya and Singapore - The 1968 population for this area is 8.5 million with a rapidly growing construction industry. The 1957 construction labor force of 25,000 is two times the 1947 figure. The construction industry is centered in Singapore and consists of several large firms (several of foreign ownership) and many smaller ones which are mostly Chinese owned. Growth of the construction industry has been slowed at times due to shortages of skilled labor. Development is heavily reliant upon foreign supply sources. Technical projects and projects of large scope are accomplished by

foreigners. Construction activity accounts for 7% of the gross national product.

Malaysia and Brunei - The 1968 population totals about 3 million. Working ages (15-64) constitutes 53% of total population. The active labor force is estimated to be 1/3 or 1 million. It was estimated that the labor force would grow 3% between 1965 and 1970. About 11% of the labor force is involved in mining, manufacturing, and construction. A lack of middle range skills exists in modern industries. Construction has a low degree of mechanization. Less than half of engineers are considered as skilled. Attempts to fill shortages of skilled labor by importation are underway. 25% of the labor force is unionized and many of the unions are Communist controlled. The construction industry is the fastest growing sector of the economy. There is a limited development of science and technology in this area.

8. Republic of the Philippines. Skilled indigenous labor is available in the Philippines in all trades necessary for construction under multi-million dollar construction contracts. There is no requirement to recruit Third Country Nationals for large construction programs in the Philippines.

   Employment of indigenous personnel in the Philippines by OICC SOWESTPAC is covered by Philippines--United States Base Labor Agreement of 27 May 1968 and Philippine--United States Collective Bargaining Agreement of 23 July 1969. Before recruiting TCN's for employment in the Philippines, contractors would be required to obtain special permits from the Philippine Department of labor. Only in cases where no qualified Filipinos are available to perform specific work will such permits be issued.

DREDGING GUIDELINES

I. GENERAL. Under present day concepts of providing extensive logical support for troops ashore to conduct sustained operations, adequate port facilities are necessary. If these facilities are non- existent, and new construction is required, dredging probably will be required. Because of the important role which dredging operations play in the overall logistic support of military operations, guidance for use by OICC personnel concerned with responding to these requirements is considered appropriate. The guidance set forth herein covers types and capabilities of dredges; recommendations relative to planning, use, physical surroundings; priorities, protection, surveys, and spare parts; OICC and contractor management; contracts; agreements; insurance; and foreign versus U. S. dredges.

II. GUIDELINES

A. Dredging Equipment

1. Hydraulic Pipeline Dredge

a. Description

(1) A pipeline dredge is generally constructed on a barge shaped hull.

(2) The "ladder" of the dredge supports the cutter- head and the suction pipe.

(3) The dredge has tubular metal or wooden "spuds" mounted on the stern which allows the dredge to move forward.

(4) They are generally not self-propelled and not constructed for long sea voyage.

(5) The size of the dredge is given in inches which refers to the diameter of the discharge pipe from the pump.

(6) The pipeline is mounted on pontoons (floating pipe) which is often connected to pipe on the shore (shore pipe).

b. Limitations

(1) Mobility - must be specially prepared or carried on board another vessel for long sea trips. Small pipeline dredges (up to approximately 12") can be transported on LSD's.

(2) Inability to work at sea - swells and waves over 3' high can cause cessation of work or damage to dredge. Floating pipeline and pontoons are also subject to damage and loss.

(3) Method of working - a pipeline dredge "walks" through an area by use of spuds. The dredge cannot be rapidly moved from one shoal to another.

(4) Limited pumping distance - dredges are limited to nearby disposal areas that can be reached with available pipeline and pump capacity.

2. Hydraulic Training Suction Hopper Dredges

a. Description

(1) A sea going vessel equipped with drag arms suspended over the side or beneath the hull and hoppers for collection of dredge spoil.

(2) Vessel moves slowly along the channel (1-4 knots) with drag heads on the bottom "vacuuming" bottom material through the suction pipes.

(3) Material is pumped into hoppers and, when filled, vessel sails to deep water and empties the hoppers by opening bottom gates.

b. Limitations

(1) Confined area - vessel needs room to maneuver and turn to get to deep water to dump.

(2) Shallow areas - dredge draft increases as it is loaded with the possibility of it being grounded.

(3) Requires deep water for dumping.

(4) Dredging hard material - dragheads cannot loosen bottom material as effectively as a cutterhead.

c. Advantages

(1) Mobility - dredge is a seagoing self-contained unit capable of operating several weeks without supplies.

(2) High production - if spoil areas are nearby, dredge can attain high production.

(3) Non-interference with traffic - dredge can maneuver to avoid ship and boat traffic. No pipeline blocks the channel.

(4) Method of dredging - sweeps the length of the channel and dredges high spots first. This allows vessel traffic to utilize the deeper channel as it is being dredged.

3. Hydraulic Side Cast (boom) Dredges

a. Description

(1) Seagoing vessel like a hopper dredge equipped with a boom supported discharge pipeline extending from the dredge.

(2) Length of boom determines whether spoil can be pumped out of the channel without rehandling.

b. Limitations

(1) Where characteristics of the waterway are such that much of the spoil returns to the channel the sidecast dredge is not economical to use.

c. Advantages

(1) High productivity - vessel need not run to deep water to dump.

(2) Shallow draft - if built without hoppers are extremely shallow draft (4 feet) allowing them to work on coastal entrances where a conventional hopper dredge would ground.

4. Clam Shell Bucket Dredge

a. Description

(1) Consists of a grab bucket operated from a derrick mounted on a barge. Buckets vary in size from 1 to 12 cubic yards.

(2) Large dredges have up to 4 derricks.

(3) Equipped with spuds.

b. Limitations

(1) Low output

(2) Leaves irregular bottoms

c. Advantages

(1) Works well in small areas

(2) Dredging depth restricted only by cable drum and cable length.

5. Auxiliary Equipment

a. A survey boat is vital to effective dredging performance. (ratio of at least one survey boat to support 4 dredges)

b. For use with a pipeline dredge: flexible coupled pontoon pipe, shore pipe, floating pontoon cylinders, ball joints, anchor barge with a derrick, dredge tenders (tug boats), sounding barges, fuel and water barges, spare parts, and, if necessary for land use, land vehicles and bull- dozers.

c. For use with hopper dredges: survey boat, dredge tender, and spare parts.

B. Recommendations for Dredging Operations

1. Preliminary Planning

a. Feasibility Studies

It is essential that a study of military constraints, poffible harbor sites, accurate hydrographic data and available land transportation be conducted at the outset of any contingency.

b. Schedule of Dredging Operations

A schedule of dredging operations should be set up based on the results of the feasibility study and on military priorities.

2. Dredge Usage

Dredges are used in the construction of deep and shallow draft ports, channels, and turning basins; for hydraulic filling to create new real estate; and for continuing maintenance of new and existing facilities.

3. Physical Surroundings

a. Coastal Entrances

This is an area subject to ocean waves and swells and also to currents caused by fresh water discharge and/or tidal exchange.

(1) Deeper than 10 feet - ideal dredge for new work and maintenance would be a hopper dredge utilizing offshore areas for disposal of material. Pipeline dredges could work in the entrance for limited periods of the year.

(2) Shallower than 10 feet - if absolutely essential to open these entrances the best dredge would probably be a shallow draft boom discharge dredge for new work and maintenance. An acceptable dredge would be a pipeline dredge working during the season when wind and wave problem is least.

b. Approach Channel to Harbors. These areas are generally protected from ocean swell and seas.

(1) Deeper than 10 feet - ideal dredges would be either pipeline or hopper.

(2) Shallower than 10 feet - for new work use a pipe- line dredge but for maintenance work a small hopper or side cast dredge would be best. Hopper and side case dredges are recommended for maintenance because of simplicity of mobilization to the site and speed with which they could restore channel dimensions.

c. Harbor Areas. The harbor area is area immediately around docks or turning basins near docks.

(1) For new work and maintenance the best dredge is a pipeline dredge.

(2) For small shoals clam shell dredges might be used.

4. Dredging Priorities

a. Only essential dredging requirements should be submitted to OICC.

b. Channels and turning basins should be constructed incrementally to provide bare minimum operating conditions (depth and width) at all high priority construction locations in the shortest possible time frame.

c. First increment port facility projects.

(1) Channel width - construct single lane channels.

(2) Channel depth - minimum for draft of vessel and silting.

(3) Turning basin - minimum for tugboat assisted docking.

5. Protection From Enemy Action

a. Pipeline dredges easily flood and protection must be afforded them from enemy surface and swimmer attack.

b. Installing water tight bulkheads in new dredges might prove to be a worthwhile investment.

c. Spare parts should be stored ashore, if possible, to stop loss in case of enemy attack.

6. Hydrographic Survey

a. Hydrographic surveys are essential when estimating quantities of materials which must be dredged and should be accomplished prior to arrival of dredge plant.

b. Recognize that if old hydrographic data is used, conditions may have changed since the survey data and quantities based thereon may be in error.

c. In areas where silting is appreciable, surveys should be taken frequently enough so that a maintenance dredging schedule can be established which will keep the waterway open.

d. Surveys should be taken behind a pipeline dredge to check required depth and width to assure safe passage for vessels.

e. The scope and urgency of dredge requirements may justify a single technical services contract to an A/E firm to provide raw hydrographic data for various locations.

7. Spare Parts

a. The pipeline dredge plant should come equipped with spare parts especially cutterheads, impellers and casings.

b. Anticipate need for booster pumps and additional shore and floating pipe.

B. Dredge Program Management

1. Single Military Manager - OICC

a. For reasons of economy and for effective use of dredge assets, a single military manager is desired to provide

dredge support for all military maintenance work, MILCON dredging and for any dredging which may be done for others.

b. Responsibilities of this single manager will include:

(1) Hydrological surveys and analysis in support of maintenance and new construction dredging.

(2) Operational control and support of U. S. and foreign owned dredges assigned to the U. S. military.

(3) Contracting for additional services and equipment which may be necessary to provide dredge support to U. S. operations in a contingency area.

(4) Liaison to effect dredge security, movements, repairs, overhaul, and support.

c. There is no functional difference between maintenance and new construction dredging. The dredging procedures are the same. Having different agencies responsible would be grossly inefficient.

d. The Staff of the Military Dredging Manager must be made up of experienced dredging personnel to carry out the dredging program in an efficient and effective manner.

e. The Military Manager will be responsible for getting defense service contracts for POL products, towing and barge service.

f. The Military Manager should also contact the U. S. Coast Guard for planning, placing and maintaining aids to navigation.

g. The U. S. Army Corp. of Engineers should be consulted concerning availability of U. S. Army hopper dredges for use in the contingency area.

h. If it is decided to phase out the prime contractor after the initial stages of contingency construction are over

the Military Manager must be staffed to let and manage all forms of contracts.

(1) Direct contracting for dredging operations, both maintenance and construction, must have been established.

(2) An experienced Civil Service organization under military direction for contract management must have been established.

(a) Contracts must be prepared, advertised, awarded, and administered. This also includes field supervision and all supporting services, such as soil investigation and hydrographic survey.

2. Contractor - Procurement and Management of Dredges

a. Dredging during the initial stages of Contingency Construction:

(1) In order to provide a capability for a large amount of dredging in a very short time frame the prime U. S. contractor (such as RMK-BRJ in Vietnam) should be tasked with new construction and maintenance dredging on a cost plus fixed fee basis.

(2) This contractor will be responsible for mobilizing dredge equipment, providing experienced dredge crews when necessary, maintaining all equipment, and carrying out the dredging program as specified by the OICC.

(3) The use of a single contractor will reduce the risk of slipping critical BOD's.

(4) If dredging is an essential portion of the priority MILCON construction in the contingency area and if mobilizing U. S. dredges would take an excessive amount of time, the prime contractor should be allowed to let subcontracts to local dredge companies or, if necessary, to foreign

dredge companies whose dredges could be mobilized in a short time frame. This "quick response" exploitation of foreign dredges would pay large dividends in early use of waterways and port facilities.

(5) The dredges which will be manned and/or supervised by the prime contractor will probably be obtained from USAID, the U. S. Army Corps of Engineers, subcontracts and direct contracts.

b. Dredging During Non-Critical Stages of Contingency Construction

(1) The majority of dredging during this period will probably be maintenance dredging.

(2) Foreign dredging contracts should be phased out and the foreign dredges replaced by dredges owned by the U.S. Government or chartered from the U. S. dredge companies.

(3) The prime contractor should continue to man and/or supervise the government-owned or chartered American dredges.

(4) With this fleet of American dredges the contractor would have the capability to efficiently perform several jobs of varying size concurrently. He could move from site to site for small quantity maintenance work without excessive expense involved with subcontract dredges for stand by payments while moving.

(5) If it is economical to purchase new dredges instead of chartering them, the contractor should make all arrangements to purchase the necessary equipment.

3. Types of Dredge Contracts

a. "Bare Boat" Charters

(1) Charterer agrees to lease dredge plant from owner for a fixed fee over a minimum time period. The fee is usually expressed in $/month.

(2) The fixed fee usually includes crew, POL, mobilization costs, all costs relating to dredge after delivery including maintenance, and demobilization cost.

(3) There is no payment to owner for stand-by, down- time, or site changes.

(4) Charterer agrees to return dredge in same condition as received except for normal wear and tear.

b. Volume/Length Contracts

(1) This type of contract is usually a sub-contract let by the prime U. S. contractor.

(2) The prime contractor agrees to pay based on volume of material pumped at a specified unit price ($/CM). This unit price increases as the length of discharge pipe increases and may de- crease if the total volume of material pumped is large enough. The prime contractor, also, usually agrees to a minimum amount of dredge usage such as one year.

(3) The owner usually furnishes dredge, auxiliary equipment, crews, POL, water and deck stores, spare parts, and quarters.

(4) The prime contractor usually assumes mobilization and demobilization costs and provides camp facilities for storage.

(5) The prime contractor pays for any stand-by or site changes and, in certain cases, downtime. In regard to downtime, most contracts state that in the event the dredges are inoperable due to normal maintenance, equipment failure or labor difficulties during a period when instructions to dredge are in effect there is no obligation to make stand-by payment to sub- contractor.

c. Lump Sum Contracts

(1) This type of contract is usually a competitively bid contract.

(2) The bid price is usually based on a set volume of material to be pumped within a certain time frame, mobilization/demobilization costs, stand-by costs, and site change costs.

(3) In other respects lump sum contracts are similar to Volume/Length contracts.

d. Agreements with U. S. Army for Use of Hopper Dredges

(1) Period of attachment commences upon departure of vessel from CONUS and terminates upon its return to CONUS and release by the Navy.

(2) Dredges to be staffed and operated by a Corps of Engineers civilian crew.

(3) Navy provides all the logistical support for the operation of the dredge including fuel, lubricants, water, subsistence, and common spare parts. Special and unique equipment which must be acquired in U. S. will be ordered by the Corps of Engineers with all transportation to be provided by U. S. Navy.

(4) The total Corps of Engineers cost for operation will be reimbursed by the Navy on a monthly basis.

(5) The Navy is responsible to return the dredge in as good condition as upon attachment.

e. War Risk Insurance

(1) All contracts concerning non-Navy owned dredges specify that the dredge must be returned in good condition. This means that in a war zone some sort of insurance must be carried by the Navy.

(2) War risk insurance may be purchased from private insurance companies. In Vietnam, it was found that the cost of war risk insurance could raise the unit price for dredging by $0.10/CM.

(3) The only other alternative to buying war risk insurance is for the Navy to self insure the dredges. This means that the Navy will pay the dredge owner out of Navy funds for any loss incurred.

4. Use of Foreign vs. U. S. Dredges

a. Based on experience in Vietnam there is no appreciable monetary advantage to using foreign as opposed to U. S. registered dredges.

b. In Vietnam the time required to mobilize foreign dredges in the Pacific Ocean area was approximately 1 1/2 months as opposed to 3 to 3 1/2 months for U, S. dredges.

c. During the critical early stages of a contingency construction program where dredging is essential, dredges with the shortest mobilization time must be used first in order to keep BOD's from slipping.

d. The U. S. Army Corps of Engineers maintains a list of all operating dredges in the world.

e. Selection of dredges for use in Vietnam was made on the basis of information on hand and primarily on the basis of availability and the then geographic location of the equipment.

f. As foreign dredge contracts are completed, and when in a position to proceed with supplementation and upgrading the dredge capability at a more measured pace, foreign dredges should be replaced with U. S. Government-owned or U. S. registered dredges (usually under "Bare Boat" charter).

(1) U. S. dredges are more reliable than foreign dredges, incur fewer breakdowns and produce a higher monthly output.

(2) The cost of stand-by and site changes is saved.

(3) I..B.O.P. - The flow of gold associated with the utilization of foreign dredges can be considered

as nearly equal to the total direct cost of operation Dredges of U. S. registry and U. S. Government dredges have generated gold flow but the percent- age of gold as related to the total direct cost of operations is relatively low and results from the direct cost of foreign nationals, a small percent- age of U. S. citizens salaries, the cost of war risk insurance and any necessary procurement of local supplies.

DEPARTMENT OF THE NAVY
NAVAL FACILITIES ENGINEERING COMMAND
WASHINGTON, D.C. 20390

NAVFACINST 3820.1
FAC 2022d/EJC:emw

4 August 1969

NAVFAC INSTRUCTION 3820.1

From: Commander, Naval Facilities Engineering Command
To: Distribution List

Subj: Dissemination of Engineering Intelligence Data; Establishment of procedures for

1. Purpose. To advise addressees of the continuing Naval Facilities Engineering Command responsibility and capability to obtain and disseminate engineering intelligence for other than CONUS areas.

2. Definition. For purpose of this instruction, engineering intelligence includes all information collected by the established Intelligence Community that applies to engineering, planning and construction, excluding the areas of political and tactical data.

3. Background. The available world-wide engineering data base ranges over a broad spectrum, including the following subject areas: climatological, medical, hydrological, geological, detailed existing facilities (ports and air), transportation and indigenous labor and materials. Graphical information in the form of aerial and ground photography, maps and hydrographic charts at various scales can be provided. Information that is not available in the present data base can be obtained by NAVFACHQ through a collection requirement directed to the appropriate intelligence sources.

4. Action. Addressees requiring engineering intelligence assistance are requested to list their informational needs by specific subject matter and geographical location. All requests shall be addressed to the Commander, Naval Facilities Engineering Command (Code 2022) for research and processing within the Intelligence Community.

J. D. RUMBLE
Assistant Commander for
Facilities Planning

Distribution: (5 copies each)
SNDL 39; FKN1(LANTNAVFACENGCOM, PACNAVFACENGCOM only), FKN2, FKN3 FKN4
NAVFAC Internal 09,02,03,04,05

Stocked:
Supply and Fiscal Dept., Naval Station
Code 514.32, Washington, D. C. 20390 (100)

POLICIES AND PROCEDURES FOR
SELECTION AND AWARD OF A-E/E-S CONTRACTS
(Reproduction of Section 18, Part 4 of ASPR)

"Part 4-Architect-Engineer Selection Procedures 18-401 Scope of Part. This Part contains the general principles and procedures for the selection of architect-engineer firms for contracts for professional services, except for such services performed in connection with Army Civil Works projects. Discussion of specific areas affecting such services will be found under the paragraphs of this Section dealing with those areas.

"18-402 Selection.

"18-402.1 Selection Policy. The selection of architect-engineer firms for professional services contracts shall be accomplished in accordance with the procedures set forth in this part. Such selection shall not be based upon competitive bidding procedures, but rather upon the professional qualifications necessary for the satisfactory performance of the services required, subject to the following additional considerations:

(i) specialized experience of the firm in the type of work required;
(ii) capacity of the firm to accomplish the work in the required time;
(iii) past experience, if any, of the firm with respect to performance on Department of Defense contracts;
(iv) location of the firm in the general geographical area of the project, provided that there is an appropriate number of qualified firms therein for consideration; and
(v) volume of work previously awarded to the firm by the Department of Defense, with the object of effecting an equitable distribution of Department of Defense architect-engineer contracts among qualified architect-engineer firms.

"18-402.2 Selection Procedures. The following procedures shall be used in the selection of architect-engineer firms for all architect-engineer contracts to be awarded in the United States, less Alaska and Hawaii, and, to the extent practicable, in the rest of the world:

(i) All selection actions, including preselection, shall be under the cognizance of the construction activity responsible for the work;

(ii) a preselection list of the maximum practicable number of qualified firms shall be prepared by a preselection board from data described in 18-403 and other pertinent information which may be avail- able, and the list shall be approved by the head of the construction activity, or his designee. Pre-selection lists for contracts estimated to cost more than $6,000 shall be prepared by a formally constituted preselection board;

(iii) both preselection and selection boards shall consist primarily of senior staff architects or engineers, or military personnel having comprehensive experience in military construction;

(iv) preparation of preselection lists for contracts estimated to cost more than $25,000, shall be accomplished by formally constituted boards consisting of at least three members.

(v) the selection board shall review the qualifications and performance data (see 18-403) of each of the firms on the preselection list, in accordance with the policy established in 18-402.1, and shall recommend, in order of preference, a minimum of three firms for approval for contract negotiations to the head of the construction activity, or his designee;

(vi) upon approval of the selections by the head of the construction activity, or his designee, and such approval as may be required by 18-402.3, negotiations shall be initiated in accordance with 18-306.2; and

(vii) all preselection and selection actions shall be fully documented.

"18-402.3 Special Approval of Selections. Special approval shall be required for certain selections as indicated below. Dollar amounts cited shall include, where applicable, fees for (I) planning and design, (II) supervision and inspection of construction, and (III) any other architect-engineer services related to construction.

(i) When the estimated cost of a contract to be awarded by a field activity exceeds $100,000, the selection shall require the approval of the next higher organizational level of the construction activity.

(ii) When a firm, to which a field contracting office has previously awarded contracts totaling over $100,000 during the current calendar year, has been selected for an additional award to be made by the same contracting office, the selection shall require, prior to negotiation with the firm, the approval of the next higher organization level of the construction activity;

(iii) When a selection is made by the Army Office of the Chief of Engineers, the Navy Bureau of Yards and Docks, or the Air Force Directorate of Civil Engineering for a contract whose estimated cost is $500,000 or less, the selection shall require the approval of the Chief of Engineers, the Chief of the Bureau of Yards and Docks, or the Director of Civil Engineering, respectively, or their designees;

(iv) When the estimated cost of a contract exceeds $500,000, the selection shall require the approval of the Secretary of the Department concerned, or his designee;

(v) When the estimated cost of a contract exceeds $1,000,000, the selection shall require the approval of the Assistant Secretary of Defense (Installations and Logistics), or his designee;

(vi) When supplemental work to be added to an existing contract will bring the total contract cost to any of the various levels of approval note above, the selection for such work shall require approval as indicated for the appropriate level (such approval is not required for supplemental work accomplished pursuant to the Changes clause of the contract);

(vii) When approval of a selection for a contract has been obtained at a particular approval level, further approval shall not be required for the selection of the same firm to accomplish supple- mental work under that contract, unless the total cost of the basic contract plus all supplemental work is an amount requiring approval of the selection at the next higher approval level or unless the supplemental awards meet the conditions described in (viii), below;

(viii) When a contract totaling over $1,000,000, for which selection approval has been granted in accordance with (v) or (vi), above, is increased by supplemental awards, approval of the selection by the Assistant Secretary of Defense (Installations and Logistics), or his designee, shall be required for each increment of such supplemental awards totaling over $200,00; and

(ix) When the award of more than one contract by a Department within a single region or area, see 18-403.2 to a firm will cause that firm's total fees during a calendar year to exceed $1,000,000, the selection for the contract which will cause this excess shall require the approval of the Assistant Secretary of Defense (Installations and Logistics), or his designee.

"18-403 Architect-Engineer Qualifications and Performance Data.

"18-403.1 General. Selection of architect-engineer firms shall be based on the effective utilization of qualifications and performance data, as described below.

"18-403.2 Architect-Engineer Regions and Areas. For the purposes of receiving and distributing architect-engineer qualification and performance data, the United States, less Alaska and Hawaii, has been divided into eight regions, and the rest of the world into five general geographic areas. These regions and areas are described and delineated in a booklet entitled, "How to Obtain Consideration for Architect- Engineer Contracts with the Department of Defense", which is published by the Office of the Assistant Secretary of Defense (Installations and Logistics) for distribution to architect-engineer firms through the various offices of the construction activities.

"18-403.3 Qualifications Data

(a) Filing. Firms desiring to be considered for architect-engineer contracts in a given region or area must file GSA Standard Form 251, "U.S. Government Architect-Engineer Questionnaire", with any one of the offices of the construction activities listed in the booklet for that region or area. Architect-engineer firms shall normally be selected from the region or area. Architect-engineer firms shall normally be selected from the region or area in which the project is to be accomplished; however, if sufficient qualified firms are not available in a region or area for consideration for a particular contract, firms from other regions or areas shall be considered. Firms desiring to be considered for architect-engineer contracts in connection with ballistics and space systems should file qualifications data with one of the offices administering this type of construction, as listed in the booklet.

(b) Distribution, Classification, and Utilization. Forms 251 filed by an architect-engineer firm with any office listed for a region or area shall be distributed to all other offices listed for that region or area, each of which shall maintain a complete architect-engineer qualifications data file for that region or area. Offices responsible for the construction of ballistics and space systems facilities, as listed in the booklet, shall cross-distribute qualifications data to each other, and shall maintain qualifications data files. Qualifications data for firms which normally are active in a number of regions or areas shall be forwarded to the Washington headquarters of the construction activities for file. Receiving offices shall review all Forms 251 and classify each firm with respect to:

(i) location;
(ii) specialized experience;
(iii) professional capabilities; and
(iv) capacity with respect to scope of work that can be undertaken.

All offices which have a responsibility for selecting architect- engineer firms shall utilize these complete data files in the required selection procedures, either through maintaining files of their own or by arranging for convenient access to the files of another office."

ACCEPTABLE PREFABRICATED STRUCTURES

A. SPECIFICATIONS. Identification of specifications currently used for procurement of prefabricated structures are:

1. MIL-B-285361 Building, Prefabricated Ready-Cut, Metal Rigid Frame, 40 by 100 feet.

2. PD-5410-142-8, Building, Prefabricated, Ready-Cut, Metal, Rigid Frame, Gable Roof, 20 by 48 feet.

(Note: A. third type, Quonset Huts, manufactured by Steelcraft Corporation of Armco Steel Corporation, were purchased from U.S. Navy stock at Davisville, R.I. The design of pre-fabricated metal buildings is standardized by the Metal Building Manufacturers Association's Recommended Design Practices Manual. The majority of the manufacturers listed in C below are members of this association, although non-members can produce buildings that conform to MBMA Design Practices. Pre-fabricated buildings currently being used are rigid metal frames with metal skins. Insulation, if required, can be supplied by a separate kit. These buildings do not include utility systems, with the exception of an electrical system in the 40' by 100' building).

B. MANUFACTURERS. The following manufacturers that have successfully supplied structures under these specifications.

Military Construction Program

1. Butler Manufacturing-Whse-40' x 96' x 14' Kansas City, Missouri

2. Pascoe Steel Corp. -Whse-40' x 100' x 14' Pomona, California

3. Soule Steel-Whse-40' x 96' x 14' San Francisco, California

Advance Base Component Program

1. Pascoe Steel Corporation - 20' x 48' and 40' x 100' buildings
   1301 E. Lexington Avenue
   P.O. Box 2628
   Pomona, California 91766
   Telephone 714-623-1411

2. Butler Manufacturing Company - 20' x 48' buildings
   7400 E. 13th Street
   Kansas City, Missouri 64126

3. A&S Steel Buildings, Inc. - 160' x 110' hangars, 80' x 100' and 80' x 300' buildings (175 MPH wind loading)
   10555 Fisler Road
   P.O. Box 40099
   Houston, Texas 77040
   Telephone 713-466-7521

C. ACCEPTABLE PREFABS. The following is a list of accept- able prefabs, by manufacturer and applicable procurement documents.

Rigid Metal Frame with Metal Skin

1.	Armco	MIL-B-28536 or	PD-5410-142-8
2.	A&S	"	"
3.	Butler	"	"
4.	Carew	"	"
5.	Inland	"	"
6.	Mitchell (Ceco Corp.)	"	"
7.	Parkersburg	"	"
8.	Pascoe	"	"
9.	Soule	"	"
10.	Star	"	"
11.	Stran-Steel	"	

(Note: This list includes the larger manufacturers of metal prefabricated buildings; other smaller companies also manufacture buildings that meet the currently used specifications.)

D. PREFABS UNDER STUDY. Concepts for buildings which are being studied include the following:

1. Lewis Bldg.
2. Universal Papertech Corp. Bldg.
3. Universal Folded Plate Structure
4. SMS-30 (Stressed Membrane Shell) Structure
5. Midwest Applied Science Corp. Structure
6. Industrialized Building Systems
7. ATCO (Fold-Away-Steel) Building

CONSTRUCTION SUPPORT DEPOT

A. INTRODUCTION. The Vietnam operations have demonstrated a need for establishment of construction depots in- country as early as possible to provide for the secure, orderly management of material assets. A construction organization must have adequate material and repair parts support. Therefore, the means by which the raw material assets can be properly managed is of highest priority. Contingency plans must recognize this, and construction of depot facilities must receive high priority. Insufficient recognition of this need results in: (1) lack of adequate resources being devoted to constructing depots, (2) lack of warehouse and depot operating personnel, (3) material being off- loaded without adequate facilities for storage and inventory, and (4) reordering because of losses and inability to locate material on hand. As a result, construction completions are delayed. Further, considerable time, effort and related expense was necessary to obtain reasonable inventory control-- working around and/or moving material to permit depot construction and making detailed inventories at all depots and warehouses. A plan to establish construction depot capability is set forth below.

B. ORGANIZATION. The organization depicted herein, and as shown on Figure V-1, is based upon the Receipt, Storage, Inventory Control, Maintenance, Issue, Shipment and Disposition of a mix of materials and equipment at an advanced base. This is not considered to be a complete organization since several essential components are not included. There should be a Comptroller organization (not shown) for processing pay checks, disbursing petty cash, reconciliating and distributing vouchers, and for accomplishing general functions of a comptroller; an administrative department (also not shown) is required for office services, communications and military personnel divisions. The establishment of an Industrial Relations Department will be required for the administration of the civilian personnel program in conformance with the rules, regulations and instructions of the Civil Service Commission, the Department of the Navy and the Naval Facilities Engineering Command. A Purchasing organization is required to accomplish procurement functions and/or other requisitioning functions which are essential to the operation of the depot.

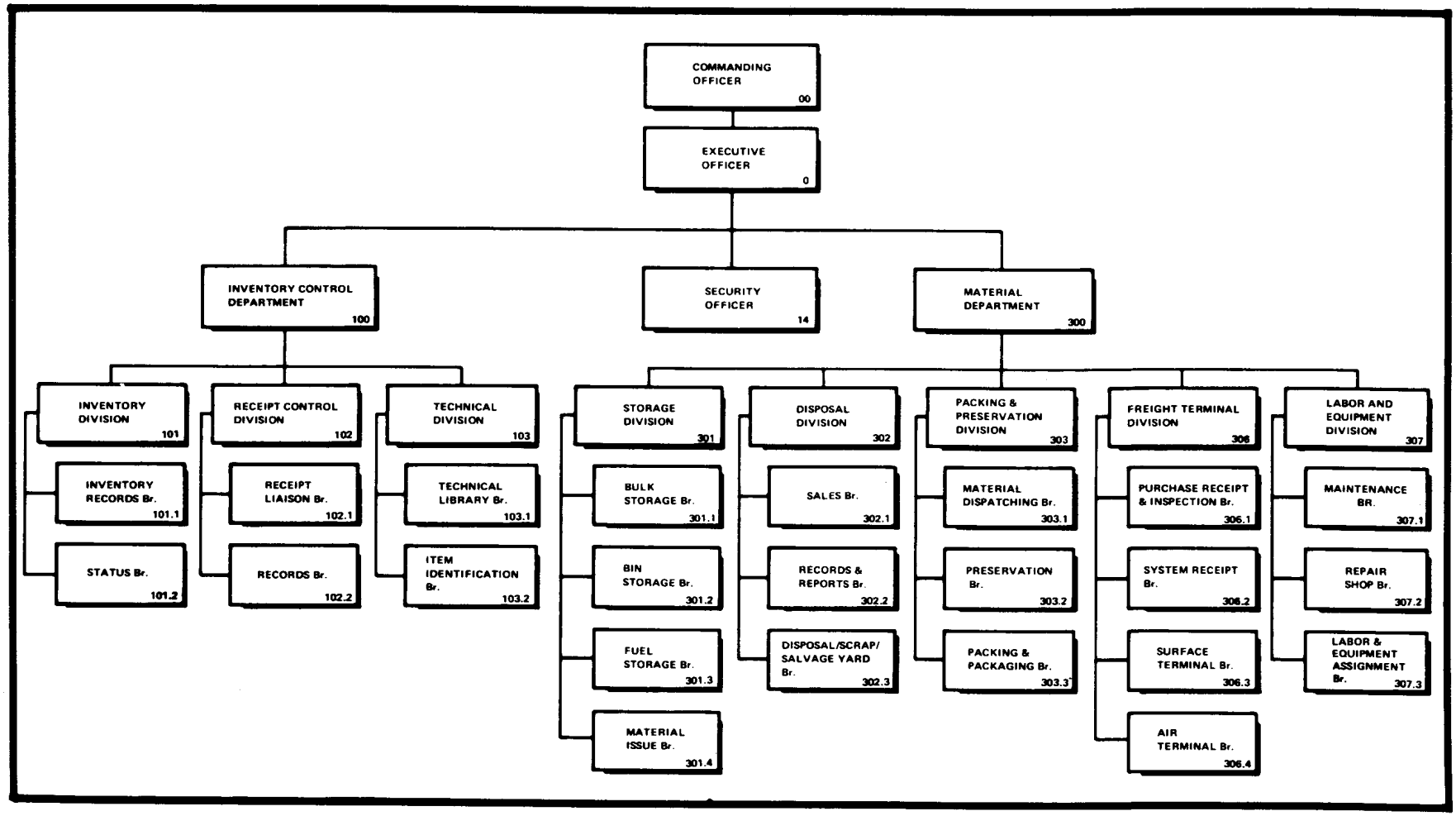

FIGURE V-1
Organization Chart for Construction Support Depot

1. Billets.

Title	Code
Commanding Officer	00
Executive Officer	0
Security Officer	14
Inventory Control Department	100
Inventory Division	101
Inventory Records Branch	101.1
Status Branch	101.2
Receipt Control Division	102
Receipt Liaison Branch	102.1
Records Branch	102.2
Technical Division	103
Technical Library Branch	103.1
Item Identification Branch	103.2
Material Department	300
Storage Division	301
Bulk Storage Branch	301.1
Bin Storage Branch	301.2
Fuel Storage Branch	301.3
Material Issue Branch	301.4
Disposal Division	302
Sales Branch	302.1
Records and Reports Branch	302.2
Disposal/Scrap/Salvage Yard Branch	302.3
Packing & Preservation Division	303
Material Dispatching Branch	303.1
Preservation Branch	303.2
Packing & Packaging Branch	303.3
Freight Terminal Division	306
Purchase Receipt & Inspection Branch	306.1
System Receipt Branch	306.2
Surface Terminal Branch	306.3
Air Terminal Branch	306.4

Labor and Equipment Division 307
Maintenance Branch 307.1
Repair Shop Branch 307.2
Labor & Equipment Assignment Branch..... 307.3

2. Rank/Grade

	Codes	Management Requirements Based on Monthly Material Dollar Value (MIL) Processed		
		0-1	1-4	4-20
Commanding Officer	00	LT	LCdr	CDR
Executive Officer	0		Lt	LCdr
Security Officer	14	Ltjg	Ltjg/Lt	LCdr
Department Head	100	GS9/11	Ltjg/GS11	LCdr/GS12
Division Head	101	GS9/11	GS9	LT/GS11
Branch Head	101.1	GS7	GS7	GS9
Division Head	102	GS7/9	GS9	Lt/GS11
Branch Head	102.1	GS7	GS7	GS9
Branch Head	102.2	GS7	GS7	GS9
Division Head	103	GS7/9	GS9	Lt/GS11
Branch Head	103.1	GS7	GS7	GS9
Branch Head	103.2	GS7	GS7	GS9
Department Head	300	GS9/11	Lt/GS11	LCdr/GS12
Division Head	301	GS7/9	GS9	Lt/GS11
Branch Head	301.1	GS7	GS9	GS9
Branch Head	301.2	GS7	GS9	GS9
Branch Head	301.3	GS7	GS9	GS9
Branch Head	301.4	GS7	GS9	GS9
Division Head	306	GS9	GS11	GS12
Branch Head	306.1	GS7/9	GS9	GS11
Branch Head	306.2	GS7/9	GS9	GS11
Branch Head	306.3	GS7/9	GS9	GS11
Branch Head	306.4	GS7/9	GS9	GS11
Division Head	307	GS7/9	GS9	GS11/Lt
Branch Head	307.1	GS7/9	GS9	GS9
Branch Head	307.2	GS7/9	GS9	GS9
Branch Head	307.3	GS7/9	GS9	GS9

3. Functional Statements:

a. Commanding Officer. The responsibilities of the Commanding officer are set forth in Section I and III, Chapter 7, Navy Regulations, and other directives and orders issued by competent authority. In addition, the Commanding Officer is responsible for providing the Logistics Support as required by the approved mission of the activity. Under the authority and direction of the immediate superior in command and in accordance with the directives of the Bureaus, Commands and Offices of the Navy Department as applicable, or Naval Facilities Engineering Command.

b. Executive Officer. The Executive Officer is the direct representative of the Commanding Officer. His duties and responsibilities as set forth in Chapter 8, Navy Regulations.

c. Security Officer. The Security Officer develops and recommends Security Policy and Procedures in all matters relating to the Depot and its mission; inforces approved Security Policies, Directives and Regulations of the Commanding Officer and higher authorities; processes security clearances; provides fire protection; controls the issuance of identification badges and passes for civilian personnel; controls vehicles traffic; controls investigation of thefts and irregularities as required; conducts such security checks as necessary to insure effective security effort in all areas; promotes the fire prevention program; and promotes security consciousness within the activity.

d. Inventory Control Department.

(1) Responsibilities. The Inventory Control Department plans and directs operations necessary to manage inventories of assigned material, control material receipts, and other phases of Inventory Control as assigned.

(2) Inventory Division. The Inventory Division maintains levels of activity stocks; maintains Stock records, and processes supply documents for material not processed through the automatic data processing system; maintains stock records; develops and provides status information on supply documents not processed through the automatic data processing system; maintains reference data on material available in the Navy, Defense Supply Agency and General Services Administration Supply System; initiates action to dispose of

excess stock material; prepares stock status reports when such reports are not developed as the automatic data processing system output; maintains records for supply documents; and performs necessary operations incident to review, investigation or correction of discrepancies in financial inventory or stock records.

(3) Receipt Control Division. The Receipt Control Division establishes and maintains the contract, government bill of lading, requisitions and order files, and related correspondence; distributes rejection notices, inspection reports, and invoices covering receipts of government material furnished to contractors; certifies and forwards contract invoices for payment of contract; accomplishes bills of lading except for household goods and those involved in supply received short or damaged; processes procurement and receipt document; maintains contact and follow-up, as necessary, to assure proper receipt of material.

(4) Technical Division. The Technical Division maintains a technical library for identification of material; screens bureau, command, inventory manager technical bulletins and makes appropriate recommendations to interested departments; identifies material not identifiable by stock number and classifies it as ready-for-issue, repairable, scrap, or salvage; samples returned material classified as scrap or salvage to insure consistancy with the inventory manager requirements and prepares reports that are appropriate; provides assistance to other units in the identification of material, research or substitute items, and preparation of commercial descriptions.

e. Material Department

(1) Responsibilities. The Materiel Department plans and directs the storage, maintenance-in- storage, issue, disposal, receiving, shipping and shipment control operations of the depot.

(2) Storage Division. The Storage Division determines and maintains proper stowage conditions and locations for material; stows material upon receipt from the freight terminal division; operates equipment necessary for storage of material and issue of material from storage; recommends materials handling equipment

requirements for warehouse operations; performs physical inventory of material as directed; develops storage space requirements and recommends the master storage space plan for the activity; maintains records of and submits reports on storage space requirements and recommends the master storage space plan for the activity; maintains records of and submits reports on storage space utilization; screens returned material for disposal or return to stock as directed by the inventory manager and other competent authority; prepares documents to place returned material in stock or disposal status; obtains assistance from the technical division, as necessary, to determine condition codes for material or to identify mixed material.

(3) Disposal Division. The Disposal Division operates disposal and scrap and salvage yards for the activity; receives, verifies, and stores excess and surplus personal property, and maintains files of directives relating to assigned programs; sugregates and lots material for sale; prepares commercial merchandising descriptions for sale of surplus property; maintains stock records for material transferred to the property disposal account; submits reports of operations as required; conducts sales when authorized; and performs such liaison as is necessary to conduct efficient operations.

(4) Packing and Preservation Division. The Packing and Preservation Division preserves, packs, and marks material for domestic and overseas shipment or storage.

(5) Freight Terminal Division. The Freight Terminal Division receives all incoming material for storage or transshipment; arranges for delivery of materials; controls the movement of inbound and outbound cargo by land, sea, or air modes, including the preparation of necessary documentation; receives and processes authorized shipments of household goods, personal effects, and privately owned automobiles for transshipment or delivery; operates the waterfront at tidewater activities, including facilities for berthing, loading, and unloading of vessels and providing services

thereto; processes documentation and maintains appropriate records of materials received or shipped; when assigned, performs the functions of Navy sea cargo coordinator in accordance with paragraph 51056; conducts advance planning of traffic operations to coordinate material movements and to assure responsiveness of transportation facilities; and inspects incoming material in accordance with current directives.

(6) Labor and Equipment Division. The Labor and Equipment Division maintains a residual labor and equipment pool; in conjunction with the using components, determines the requirements for laborers, high lift truck operators, and other ungraded personnel not permanently assigned to the using component and furnishes such requirements; trains and examines all personnel operating transportation equipment excluding automated materials handling systems; issues operators' licenses and maintains related records; assigns materials handling equipment to using components and re- assigns to meet operational needs; maintains, repairs and overhauls materials handling and other equipment; assigns and operates transportation equipment; requests additional transportation, weight handling, and construction equipment to meet peak or unusual workloads; maintains liaison on equipment matters; and performs janitorial services. Routine or average labor and materials handling equipment requirements of using components will be fulfilled through personnel and equipment permanently attached to the using component. Personnel of the labor and equipment pool temporarily assigned to a using component will be under the administrative control of the labor and equipment division and the Operational control of the using component.

C. FACILITIES. To provide adequate facilities for storage, the construction support depot can be planned and erected utilizing Advanced Base Functional Components. These components must be tailored at call out to meet site conditions (power source, etc.), existing facilities available and other considerations. As these facilities will be contractor-operated personnel have been tailored out in each case. The basic facilities requirements stated in terms of tailored ABFC's is as follows:

a. <u>0-1 Million Monthly Dollar Value Processed.</u>
D-31B less personnel
D-33B less personnel, less boats
D-29C less personnel

Berthing, messing and other personnel support facilities are not included. N-Series components may be utilized for this purpose.

b. <u>1-4 Million Monthly Dollar Value Processed.</u>
D-31A less personnel
D-33A less personnel, less boats
D-29C less personnel

Berthing, messing and other personnel support facilities are not included. N-Series components may be utilized for this purpose.

c. <u>4-20 Million Per Month Dollar Value Processed.</u>
2 - D-31A less personnel
2 - D-33A less personnel, less boats
D-20B less personnel

Berthing, messing and other personnel support facilities are not included. N-Series components may be utilized for this purpose.

D. STAFFING. To provide manning, key personnel can be obtained from the U.S. Naval Construction Battalion Centers. This listing must be periodically updated to reflect the current situation.

<u>0-1 Million Monthly Dollar Value Processed</u>

Commanding Officer	00	LT	CBC Davisville
Executive Officer	0	-	-
Security Officer	14	LTJG	CBC Fulfport
Department Head	100	Not Available	-
Division Head	101	Not Available	-
Branch Head	101.1	GS-7	CBC Hueneme
Division Head	102	Not Available	-
Branch Head	102.1	Not Available	-
Branch Head	102.2	Not Available	-
Division Head	103	Not Available	-
Branch Head	103.1	Not Available	-
Branch Head	103.2	Not Available	-

Department Head	300	GS-9	CBC Hueneme
Division Head	301	GS-9	CBC Davisville
Branch Head	301.1	GS-7	CBC Hueneme
Branch Head	301.2	GS-7	CBC Hueneme
Branch Head	301.3	Not Available	-
Branch Head	301.4	Not Available	-
Division Head	306	Not Available	-
Branch Head	306.1	Not Available	-
Branch Head	306.2	Not Available	-
Branch Head	306.3	Not Available	-
Branch Head	306.4	Not Available	-
Division Head	307	Not Available	-
Branch Head	307.1	Not Available	-
Branch Head	307.2	Not Available	-
Branch Head	307.3	Not Available	-

1-4 Million Monthly Dollar Value Processed

Commanding Officer	00	Not Available	-
Executive Officer	0	LT	CBC Gulfport
Security Officer	14	LTJG	CBC Gulfport
Department Head	100	Not Available	-
Division Head	101	Not Available	-
Branch Head	101.1	GS-7	CBC Hueneme
Branch Head	101.2	Not Available	-

Division Head	102	Not Available	-
Branch Head	102.1	Not Available	-
Branch Head	102.2	Not Available	-
Division Head	103	Not Available	-
Branch Head	103.1	Not Available	-
Branch Head	103.2	Not Available	-
Department Head	300	GS-11	CBC Davisville
Division Head	301	GS-9	CBC Hueneme
Branch Head	301.1	GS-9	CBC Davisville
Branch Head	301.2	Not Available	-
Branch Head	301.3	Not Available	-
Branch Head	301.4	Not Available	-
Division Head	306	Not Available	-
Branch Head	306.1	Not Available	-
Branch Head	306.2	Not Available	-
Branch Head	306.3	Not Available	-
Branch Head	306.4	Not Available	-
Division Head	307	Not Available	-
Branch Head	307.1	Not Available	-
Branch Head	307.2	Not Available	-
Branch Head	307.3	Not Available	-

4-20 Million Monthly Dollar Value Processed

Commanding Officer	00	CDR	CBC Gulfport
Executive Officer	0	Not Available	-
Security Officer	14	Not Available	-
Department Head	100	Not Available	-
Division Head	101	Not Available	-
Branch Head	101.1	Not Available	-
Branch Head	101.2	Not Available	-
Division Head	102	Not Available	-
Branch Head	102.1	Not Available	-
Branch Head	102.2	Not Available	-
Division Head	103	Not Available	-
Branch Head	103.1	Not Available	-
Branch Head	103.2	Not Available	-
Department Head	300	LCDR	CBC Hueneme
Division Head	301	LT	CBC Davisville
Branch Head	301.1	Not Available	-
Branch Head	301.2	Not Available	-
Branch Head	301.3	Not Available	-
Branch Head	301.4	Not Available	-

Division Head	306	Not Available	-
Branch Head	306.1	Not Available	-
Branch Head	306.2	Not Available	-
Branch Head	306.3	Not Available	-
Branch Head	306.4	Not Available	-
Division Head	307	Not Available	-
Branch Head	307.1	Not Available	-
Branch Head	307.2	Not Available	-
Branch Head	307.3	Not Available	-

DEPARTMENT OF THE NAVY
NAVAL FACILITIES ENGINEERING COMMAND
WASHINGTON, D.C. 20390

NAVFACINST
FAC 04136/JW:gsp

NAVFAC INSTRUCTION

From: Commander, Naval Facilities Engineering Command
To:

Subj: Specification of Materials for Contingency Construction

Ref: (a) NAVFAC ltr "Policies and Procedures for Improving Contingency Construction ("Lessons Learned")" of 16 May 1969

End: (1) Instructions on Use of SEAMAT

1. Purpose. To direct the full application of SEAMAT for the selection, requisition, and purchase of materials and equipment used in the construction by contractor of bases for or in contingency operations.

2. Discussion.

a. Reference (a) recognized the utility of the SEAMAT system for selection of materials and equipment in the design and contractor identification and procurement in the construction of bases in contingency operations. The system provides the designer with a selection of materials and equipment which are available off-the-shelf industry products of established acceptability; it provides a means of identification which can be used in initial design and to expedite the procurement, shipment, storage and use in the contractor's construction operation; it identifies the manufacturers and model numbers of the listed equipment, which have been verified as being adequate and appropriate for the listed intended applications.

b. For optimum utility, the SEAMAT system must be a requirement which the OICC directs his management and design staff, all A/E contractors, and all construction contractors to comply with.

3. Action. Addressee shall ensure that the OICC staff, A/E contractors, and construction contractors are provided with complete SEAMAT documentation and required to utilize it to the maximum extent in the development of design, in materials take-off, in requisitioning, and in procurement. Copies of implementation directives are to be forwarded to Command Headquarters within 60 days of the date of this notice.

INSTRUCTIONS ON USE OF SEAMAT

1. Purpose. The purpose of these instructions is to describe the SEAMAT system and explain its use in contractor construction of facilities under contingency operations.

a. SEAMAT is a system which provides: an organized numbering system for identification of construction materials and equipment; brief descriptions (in most cases) suitable for use in procurement of reliable off-the-shelf commercial products; identification of manufacturers and model numbers; usage data; and notes on exactly how to order or request purchase of each product. The system, to be most effective, must be used: by the designer to designate materials; by the contractor to identify and requisition the materials; by the contractor's purchasing office to procure in accordance with the SEAMAT item descriptions, and identify the materials being shipped to the contractor with the SEAMAT numerical identifier and nomenclature; and by the contractors inventory controllers for proper identification.

b. Used in this way, SEAMAT assists in selection of materials, simplifies their identification, reduces volume and improves accuracy of communications in transmitting purchase requirements, promotes competitive procurement by the contractor and at the same time permits rapid purchase of off-the-shelf commercial products.

2. Organization. SEAMAT documentation is divided into two basic parts. The first part contains an index of materials and equipment, and a short description of each item, including identifying number, name, usage date, and informative notes. The second part contains a list of manufacturers' names, addresses and model numbers for each item contained in the first part. A more detailed description follows.

a. First Part. Items are arranged in divisions corresponding to the standard Construction Specifications Institute divisions. Division 2 is site work; Division 5 is Metals, Structural and Miscellaneous; Division 6 is Carpentry; Division 9 is Finishes; Division 10 is Specialties; Division 15 is Mechanical; and Division 16 is Electrical. In the Index under each Division, each item is listed, together with its identifying Index number and the date of issue of the descriptive data for that item. Within each Division, items are organized under a further breakdown. In Division 16, for example, the sub-divisions are 01-Transformers, 02-Switchgear, 03-Circuit Breakers, 04-Panel Boards, 05-Safety Switches, 06-Lighting Fixtures, 07-Motor Starters, 08-Contactors, 09-Relays, 10-Wiring Devices, 11-Fire Alarm Systems 12-Airfield Lighting.

(1) The Index number identifies each item. It also shows the division and sub-division in which the item appears. Thus, for Conduit, Rigid, Steel and Index Number 16-06-003 is assigned. 16 is the division, 06 the sub-division, and 003 the third item therein. Along with the Index Number on the item description sheet(s), is shown the date of issue of the item description.

(2) On the item description sheet(s), 4 paragraph headings appear: Item Name, Usage, Descriptive Data, and Notes.

(3) The Item Name is a brief, descriptive nomenclature, which can be easily recognized by all users of the document.

(4) The Usage paragraph briefly states the principal uses of the items and also identifies its quality in terms of applicability to permanent or temporary construction. Some items are intended for use in both types of construction; in this case, no mention is made in this paragraph.

(5) The Descriptive Data paragraph is a short purchase description or procurement specification that establishes the minimum requirements which a product must meet to be acceptable. Included in the paragraph are blank spaces for insertion of sizes, lengths, capacities, etc., as appropriate. With this Descriptive Data paragraph, the purchasing office has adequate technical documentation for a purchase contract.

(6) The Notes paragraph gives the uniform method of ordering, i.e. Index number, item name, quantity and selection of sizes lengths, etc. required. The paragraph then provides information which may assist the designer in making selection, or the purchasing office in its procurement.

b. Second Part. Following the same arrangement of divisions and sub-divisions as the first part, this part contains sheets identified to the items of the first part by use of the same Index number and Item name, except that the Index number is preceeded by the letter "M" to prevent inadvertent reference. For each item listed in the second part are names and addresses of manufacturers, together with the appropriate model or part numbers. A careful check has been made to determine that the commercial items so listed can, in fact, meet the requirements stated in the Descriptive Data paragraph in the first part. There may be other manufacturers' items which also will meet those requirements, but they have not been checked.

3. Lse.

a. CICC staff or A/E contractor. In developing a design, maximum use should be made of the materials and equipment covered by SEAMAT. In the drawings and specifications, items selected should be identified by the Index number and Item name. Pertinent data required by blanks in the Descriptive Data must also be shown. It is by complete identification of requirements at this point that both time and money can be saved in acquiring and delivering the right items. Thus the importance of showing the Index number, item name, and pertinent data

b. In-country contractor. In material take-off, the Index number, Item name and pertinent data shown should be used. Other materials and equipment not identified in the drawings or specifications to SEAMAT should be checked against SEAMAT and used if applicable. In making up Purchase Requests, follow NOTE 1 of the SEAMAT sheets for each item, being sure to include all pertinent data required. This is essential if the purchasing office is to be fully responsive. In inventory management of material received in-country, the Index number can be used to good advantage.

c. Purchasing office. Purchase requests received should show the Index number, Item name, and pertinent data. Then reference to the appropriate Index number sheet(s) will provide a purchase description for use in procurement in the first part, and some sources of manufacture in the second part. Information in the NOTES, such as approximate lead times for small quantities, may also be useful. For items not identified to SEAMAT in the Purchase Request, check the item against SEAMAT and use if applicable. Procurement of items of manufacturer and model number listed in SEAMAT does not relieve the purchasing office of its responsibility to determine that they meet all of the SEAMAT Descriptive Data.

4. Feedback and Update. As SEAMAT specifications are revised, they will be identified as revisions by appending a capital letter at the end of the Index number. “A” will denote the first revision, "B" the second, and so forth. Any changes or improvements found necessary or desirable by the OICC staff, A/E contractor, in-country contractor, or purchasing office should be forwarded to command headquarters for appropriate action. Also forward information on items which should be added to the SEAMAT codumentation. Repetitive procurement of items not covered by SEAMAT is not justified unless the requirement is sent to command headquarters for inclusion in SEAMAT

STUDY ON CBL VERSUS GBL

1. General

a. Government Bill of Lading (GBL)

Government bills of lading are used for the procurement of transportation and related services from commercial transportation carriers when the charges for such services are properly payable by the Government directly to the carriers concerned. GBL's are required in connection with all line-haul movements by commercial carrier's between points in the continental United States (CONUS) for which the Government is responsible for payment.

GBL's are always in "Collect" form, that is, payment for transportation is made after material has been received by the consignee at destination and is acknowledged by the consignee to be in good order.

Paid GBL's are audited by the Navy Material Transportation Office (NMTO) Norfolk, Virginia. The Navy Finance Center, Washington D. C., the paying office, may also challenge billed charges at the time GBL's are submitted by carriers for payment. The General Accounting Office (GAO) conducts a final audit for the Government within two years after the date of the issuance of GBL's.

Claims against carriers for damage to material shipped by GBL's must be settled by the Government under established report of damage claims procedure. The Government is "self insured" regarding material which is shipped on a GBL. Shipment losses which are not attributable to negligence on the part of carriers must be absorbed by the Government.

Shipments weighing 10,000 lbs or more to be made on GBL's require that a "route release" be obtained from the Military Traffic Management and Terminal Service (MTMTS). The mode of transport and the carrier to provide service is selected by MTMTS. All other shipments made on GBL1s are directed by shipping Officers having cognizance of material to be shipped.

b. Commercial Bill of Lading (CBL)

A CBL is basically the same type of document as a GBL in that it is used for the procurement of transportation and related services, except that the service is purchased by a commercial concern,

a Government contractor for example. The commercial concern negotiates directly with the carrier, and is responsible for the payment to the carrier, and is responsible for settling claims with the carrier for damages that may occur to material during shipment.

CBL's may be issued on either a "Collect" or a "Prepaid" basis, but Government contractors normally ship on a "Prepaid" basis (transportation charges are billed to and paid by the shipper). The Government does not pay for the transportation cost of material consigned via CBL's on "Collect" basis. In the instances where the Government must pay shipping charges for material moved on CBL's made on a "Collect" basis, the CBL is converted to a GBL at the destination point by a Government agency so authorized.

2. Factors considered

For the purpose of this analysis (flow/time/cost)), a study and shipment sampling made by the Naval Supply Systems Command and the Military Traffic Management and Terminal Service was utilized. Sampling includes the total amount of Intra-CONUS shipments generated by three NAVFAC CPAF contractors at a time when a substantial amount of construction was in progress in Southeast Asia, during the months of December 1966, January and February 1967

a. Shipments made by CBL, moving from contractor plants to tidewater activities for further shipment to Republic of Vietnam and/or Thailand:

RMK-BRJ	(Contract NBy 44105)	5,849	Documents
UMD	(Contract NBy 63905)	1,284	“
DZK	(Contract NBy 63908)	1,196	“
	Total documents reviewed:	8,329	“

b. 1300 documents of the total (a. above) were subjected to a rate and routing review and were in the less-than-10,000 lbs category.

c. 84 documents for shipments of 10,000 lbs or more each were fully analyzed by WA-MTMTS and evaluated against applicable tariff and Section 22 rates (Special reduced transportation rates available to the Government).

d. CPAF contractor's technique concerning the use of CBL's was compared with the technique used by commercial concerns engaged in large volume shipment operations, Star Forwarders, and Montgomery Ward Inc., and, with technique used by Government in large volume

shipment operations, Defense Contract Administration Services, Tracy Defense and Sharpe Army Depot.

e. The CPAF contractor's routing competancy (selection of mode of transport and selection of carrier to perform required service) was compared to WA-MTMTS for carload and truckload shipments and was compared to the commercial and Government agencies named above for less-than-truckload shipments.

f. A sampling of 25 rate and routing requests was submitted to WA-MTMTS to ascertain the average time lapse between time of request to time of response.

g. 17 separate experiments were made to compare the time involved in the preparation and distribution of CBL's and GBL's.

3. Assumptions made in conducting analysis.

a. Tidewater ports selected by CPAF contractor's was based on valid operational requirements.

b. Required delivery dates (RDD) in all cases dictated the mode of transportation utilized and in some cases the specific carrier selected by CPAF contractor.

c. Consolidation of small shipments was maximized by CPAF contractor.

4. Results of Analysis

a. CPAF contractors have better control of newly procured material and equipment when shipments are made on CBL's.

b. The preparation, distribution and other processing required in the use of CBL's is much less than that required in the use of GBL's.

c. The administrative cost for processing and the level of training required in the use of GBL1s is greater than for CBL's.

d. Contractors (vendors) all have a basic familiarity with CBL's, but not so with GBL's.

e. Test results for time consumed in preparing CBL's was 3 1/2 min. average.

f. Test results for time consumed in preparing GBL's was 10 min. average.

g. For shipments of over 10,000 lbs to be made on GBL's on which a routing is required from WA-MTMTS, the average time to obtain the routing was found to be as follows:

(1) On 7 PRI I shipments: 4 hours (transacted via phone)

(2) On 6 PRI II shipments: 9 1/2 hours (transacted via Military messenger)

(3) On 12 other shipments: 18 1/2 hours (low of 12 hrs to high of 22 hrs)

h. CPAF contractor personnel were able to route shipments on CBL's (via phone) at an average time of one hour, (min: 20 min/max. 3 hrs).

i. Each of the CPAF contractors was found to have a satisfactory traffic section, including experienced traffic manager, competent freight rate specialists and technicians.

j. CPAF contractor's routing technique for carload and truck- load shipments was found to be comparable to WA-MTMTS. For less than truckload shipments technique was found to be comparable to that of the Tracy Defense Depot and the Sharpe Army Depot.

k. Analysis of the 84 largest shipments (see 2c above) indicated that a negligible amount of savings may have resulted if GBL's were utilized in lieu of CBL's. The cost for shipments made on CBL was equal to the cost for the shipment of similar material made on GBL's.

1. The use of CBL's permits routing of shipments via specific junction points where more than one carrier is needed to make a delivery. The tracing and expediting of high priority shipments is facilitated when junction points are known. (Shipments made on GBL's do not normally indicate the junction points.)

CONSTRUCTION IN SUPPORT OF (TITLE AS APPROPRIATE)

(All Dollar Amounts in Thousands)

Sheet No. _____ of _____
Department of the (SERVICE)
Report for Month Ending _____

Country _____

a	b		c	d	e	f	g	h	i	j	k	l	m
Base/ Complex	Project Description		Scope	Approved Project Amount	Start Date	Sched-uled BOD	% Comple-tion to Date		Current Working Estimate	Physical Completion in Dollars			Con-str. by
	Category Group	Category Group Title					Plan	Act		To Date Actual	Current Month Actual	Next Month Planned	

CONSTRUCTION IN SUPPORT OF
(TITLE AS APPROPRIATE)

Department of _____ Report for Month Ending _____

A. Summary of Fund Availability ($000)

(1) Military Construction

Initial Increment
Follow-on Increment No. 1
Follow-on Increment No. 2
Etc.

(2) Other Funds Utilized for Construction _____
TOTAL _____

B. Summary of Funding Status

Country	Funds Available	Current Working Estimate	Cumulative Obligations	Work In Place
A				
B				
CONUS				
D				
ETC				
TOTALS				

LINE ITEM SUMMARY FORMAT - CONSTRUCTION

(In Thousands of Dollars)

a	b	c	d	e	f	g	h	i	j	k	l	m	n	o	p
Project / Line Item	Location / Description	Category Code	Scope	By	% PS Cpl	PS Cpl Date	Const Start Date	BOD	Auth Amt	Assgn Amt	Obl Amt	CWE	Accr Cost	% CWE	PS Proj, LI#

DATA REQUIREMENTS - MCON

Data Name	Field Size	ALPHA Numeric	Remarks - Definition	SOURCE/ORIGINATION OF DATA: Originates Data	SOURCE/ORIGINATION OF DATA: Source Document	Means of Input to Reporting System Master File
Authorized Scope	9	N	Quantities, Amounts, Magnitudes, etc., of construction or acquisition	NAVFAC Code 21	1391	2318
Assigned Scope	9	N	Scope assigned by NAVFAC	NAVFAC Code 133	Apportionment Approval from BuBud	2318
Actual Scope	9	N	That ultimately provided or currently under design	Execution	A&E or Contract	
Authorized Amount	9	N	That Amount Authorized by Congressional Breakdown in Accordance with Justification	NAVFAC Code 21	1391	2318
Funded Amount	9	N	Amount Congressionally Funded	NAVFAC Code 21	Congressional Committee Report	
Apportioned Amount	9	N	Amount Apportioned by the Bureau of the Budget	NAVFAC Code 133	Apportionment Approval from BuBud	
Allocated Amount	14	N	Amount Allocated by NAVFAC to a Field Activity	NAVFAC Code 133	10-7300/7 (2310)	
Assigned Amount	9	N	Amount Assigned by NAVFAC to a Field Activity	NAVFAC Code 133		2318
Line Item Description	50	AN	Actually Broken Into Two 25-Character Fields Defined as First or Second Line Description	NAVFAC Code 21	1391	2318
Unit of Measure	2	A	As Defined By NAVFAC's P-72	NAVFAC Code 21	1391	2318

DATA REQUIREMENTS - MCON

Data Name	Field Size	ALPHA Numeric	Remarks - Definition	SOURCE/ORIGINATION OF DATA: Originates Data	SOURCE/ORIGINATION OF DATA: Source Document	Means of Input to Reporting System Master File
Project Number	4	AN	A Program of Construction for a Particular Station	NAVFAC Codes 21, 133, 05 and Project Managers		2318
EFD	2	B	Number Assigned to Identify an EFD for Purposes of Transaction Reporting	NAVFAC Code 21	1391	2318
Major Claimant	2	N	A Code Identifying the Senior Official in a Chain of Command Assigned to Exercise Command Over Shore Activities. See 11013.20A for Code Breakdown.	NAVFAC Code 21	1391	2318
Apportionment Flag	1	AN	Flag Indicates Item has Been Apportioned.			
P Number	3	AN	Number Assigned by a Field Activity to Identify a Construction Project From Inception to Inventory	EFD	1391	
Branch Code	4	N	Number Identifying Organizational Component Within NAVFAC	NAVFAC Code 21		2318
Authorization Year	2	N	Year of Congressional Authorization	NAVFAC Code 21	Public Law	2318
Fund Year	2	N	Year in Which Congressional Funding was Made	NAVFAC Code 133		2318
Primary Category Code Secondary Category Code	5	N	As Defined by NAVFAC P-72	NAVFAC Code 21	1391	2318
Appropriation Code	2	AN	Code Used to Identify Specific Appropriation. See 11013.20A for Code Breakdown	NAVFAC Code 21 (MCON) NAVFAC Code 133 (OTHER)	1391 1391	

DATA REQUIREMENTS - MCON

Data Name	Field Size	ALPHA Numeric	Remarks - Definition	SOURCE/ORIGINATION OF DATA Originates Data	Source Document	Means of Input to Reporting System Master File
Program Category	1	A	Identifies Major (A); Minor (B); Planning (C); Supported (D); Reimbursables (E)	NAVFAC Codes 21, 05, 133 and Project Managers		2318
Program Status Code	1	N	Identifies Amended Authorization, Rescinded, Reprogrammed, Cancelled, Apportioned	NAVFAC Code 133		
Administrative Reserve	4	N	Percentage of Admin. Reserve to be Applied	NAVFAC Code 133		
2318 Amendment Number	3	N	Consecutive Numbering of Assigned Amount Changes to a 2318	NAVFAC Code 133		2318
Activity Code Number	7	N	A Number Used to Identify an Established Shore Activity. See OBNAV P09B23-105, Edition 35	NAVFAC Master Activity File		
State Code	2	N	Assigned State Code to Activity	NAVFAC Master Activity File		
Agent Code	6	AN	Name of Contractor, Activity, etc., to Whom You Obligated Money			
SIOH Distribution	9	N	Supervision, Inspection and Overhead Charges. Normally Computed by Multiplying Administrative Rate Against Accrued Costs	Computed by Machine		2319
CWE	9	N	Reflects Amounts Which Have Been Obligated, Plus Planned Obligation	Reported by EFD	2820 Reporting System	2319
Quality Code	2	N	Code Indicating Quality of the Current Working Estimate	Reported by EFD	2820 Reporting System	2319

DATA REQUIREMENTS - MCON

Data Name	Field Size	ALPHA Numeric	Remarks - Definition	SOURCE/ORIGINATION OF DATA: Originates Data	SOURCE/ORIGINATION OF DATA: Source Document	Means of Input to Reporting System Master File
Award Date	4	N	Date Award Actually Took Place or the best and Most Reasonable Forecast of the Data of Award of a Contract	Reported by EFD	2820 Reporting System	2319
BOD/UCD	4	N	Estimated or Actual Date Work is Usably Completed	Reported by EFD	2820 Reporting System	2319
Bid Open Date	4	N		Reported by EFD	2820 Reporting System	2319
Bid Advertising Date	4	N		Reported by EFD	2820 Reporting System	2319
Construction Start Date	4	N		Reported by EFD	2820 Reporting System	2319
Obligation	9	N	Amount Obligated	Reported by EFD	2820 Reporting System	2319
Committed Amount	9	N	As Defined in the P-1570 - 11013.20A	Reported by EFD	2820 Reporting System	2319
Work-In-Place (Expenditures, Payments, Accrued Costs)	9	N	This is the Value of Work put in Place for a Facility and is Taken Directly From the Contract Performance Statement	Reported by EFD	2820 Reporting System	2319
PIIN	17	AN	Procurement Instrument Identification Number. See NAVFACINST 4330.35 of 9 Jan 1966. (Replaces NBy Number.)	Reported by EFD	2820 Reporting System	2319
Document Number	8	AN	Indentifies any Procurement Document Other Than Contracts	Reported by EFD	2820 Reporting System	2319
By Code	2	N	Code Indicating Activities Responsible to Construction Agencies for the Performance of Work. See 11013.20A for Breakdown	Reported by EFD	2820 Reporting System	2319

DATA REQUIREMENTS - MCON

Data Name	Field Size	ALPHA Numeric	Remarks - Definition	SOURCE/ORIGINATION OF DATA Originates Data	Source Document	Means of Input to Reporting System Master File
Type Code	2	N	Code Providing Information Relating to Procurement Authority, Type of Procurement or Contract and the Purpose of the Contract or Procurement. See 11013.20A for Breakdown.	Reported by EFD	2820 Reporting System	2319
Delay Code	4	A	Indicates Reason for Delay. See Change 6 to 11013.20A for Delay Codes. (DOD Standard Data Element)	Reported by EFD	2820 Reporting System	2319
Remarks	15	AN	Narrative Information	Reported by EFD	2820 Reporting System	2319
Design Start Date	4	N	Estimated or Actual Design Start Date	Reported by EFD	2820 Reporting System	2319
Design Completion Date	4	N	Estimated or Actual Design Completion Date	Reported by EFD	2820 Reporting System	2319
Design Costs In-House	9	N	Design Costs Incurred In-House by EFD	Reported by EFD	2820 Reporting System	2319
Design Costs Contract	9	N	Design Costs Incurred by Contracted Design Effort	Reported by EFD	2820 Reporting System	2319

INDEX

Abstract, iii
Acceptable Prefabricated Structures, App. U-1
Additional Benefits, App. P-1
ADP and reporting, 45
    responsibility, 46
    status, 46
A-E/E-S, Capability Consideration, 33
    Cost Reimbursable Contract, 32
Airlift Support, 45
Alternatives, 32
Analysis, 1
    J.C.S., 1
    OSD, 1
    NAVFAC, 1
    Navy, 1
    RVN, 1
Areas of Coverage, 2
Automotive Vehicles, 45
Award and Selection, 33, App. T-1

Base and Site Development Planning, 34, 35-39
Benefits, additional, App. P-1

Capability Consideration, A-E/E-S, 33
CBL versus GBL, study, 43, App. X-1
Command Information Bureau, App. J-1
Command Policy, 2
Commercial Bills of Lading versus Government Bills of Lading, 43, App. X-1
Communications, requirements for, 14, App. I-1
Compilation of Recommendations, 1
Construction Agent, 4, App. A-1
Construction Status Reporting, App. Y-1
Construction Support Depot, 41, App. V-1
Contacts, Sponsor, App. C-1 Continuity, 15
Contract, 16, 20, 26, 32, App. T-1
    Cost Reimbursable, 32
    Selection of, 26
    Type of, 29

Contracting, Method of, 29
    Plans, 28
Contractor, information, 28
    personnel, 29
Contractor Staff, 42
    CONUS, 43
    In-country, 42
Control, system, 41
Cost Estimating, 47
    manual, 47
    procedures, 47
        estimating guides, 49
        types of estimates, 47
Cost Reimbursable, contract, 30
Contractor personnel, 30

DASD (P & I), App. B-1
Data, dissemination of, App. S-1
DCSC, 41
Defense agencies using NAVFAC, App. A-1
Design and Engineering Support, 32
Designations, 5
    assigned, 5
    contingency/peacetime, 5
    unassigned, 5
Designer, In-country, 42
Dissemination of Intelligence Data , App. S-1
Dredging, 31, App. R-1

Engineering, 32
    design and support, 32
    intelligence, 32
    scope, 32
Equipment, 43
Establishment/Expansion of OICC, 7

Federal Agencies Using NAVFAC, App. A-1
Federal Stock Numbers, 43
Foreword, v
Functional Statements, 13, App. G-1

Guidelines, dredging, App. R-1
        position descriptions, 13, App. H-1

Incentives for U.S. Personnel, 30
In-country Contractor Staff, 42
    designer, 42
Indigenous Personnel, 30, App. N-1
Intelligence, engineering, 32

Labor Information, 29
    relations, 31

Manpower listings, 7
    OICC organization No.1, App. D-1
    OICC organization No.2, App. E-1
    OICC organization No.3, App. F-1
Materiel, 40-41
Memorandums, DASD (P & I), App. B-1
    Overseas tour length, App. O-1
Method of Contracting, 29

Naval Facilities Engineering Command (See NAVFAC)
NAVFAC,
    agencies using, App. A-1
    analysis of RVN construction, 1
    dissemination of intelligence data, App. S-1
    employee mobility, App. L-1
    establishment of liaison billets, App. M-1
    establishment of STAR employee mobility, App. K-1
    personnel, 14
    SEAMAT, App. W-1

Officer in Charge of Construction (See OICC)
OICC, Establishment/Expansion of, 42
Organization Charts, 7
Overseas Tour Length, App. O-1

Personnel, 14
    cost reimbursable, 30
    indigenous, 15, 30
    NAVFAC, 15
    Non-Navy, 15
    Third country, 15
    U.S. incentives for, 30
Planning, site and base, 34, 35-39
Plans, contracting, 28
Policies, App. T-1
Position Descriptions, 13, App H-1

Prefabricated Structures, 39, App. U-1
Public Affairs Office, 14
    plan for, App. J-1

Recruiting Procedures, 15
Relations, labor, 31
Requirements for communications, App. I-1
Reviews, recurring, 34
ROICC, 43

SEAMAT, 41, App. W-1
Selection and Award, 33, App. T-1
Services, 16
Site and Base Development Planning, 34, 35-39
Southeast Asia Materiel (See SEAMAT)
Sponsors, 5
    contacts, App. C-1
Staff, in-country, 42
Staffing, 14, 16, 41
Statements, functional, App. G-1
Status Reporting, construction, App. Y-1
Structures, prefabricated, App. U-1
Subcontract, 41
Support, design and engineering, 32
    depot, 41, App. V-1
Supporting Services, 45
System, control, 4

Third Country Nationals, 30, App. N-1
"Turnkey" Approach, 32

U.S. Personnel, incentives for, 30