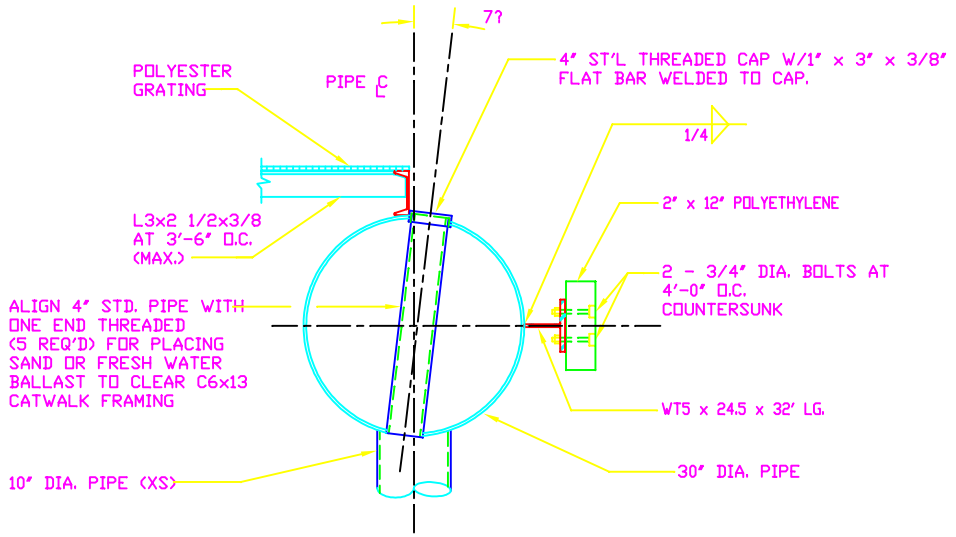


SECTION 2 (S-2 | S-4)
SCALE: 1" = 1'-0"

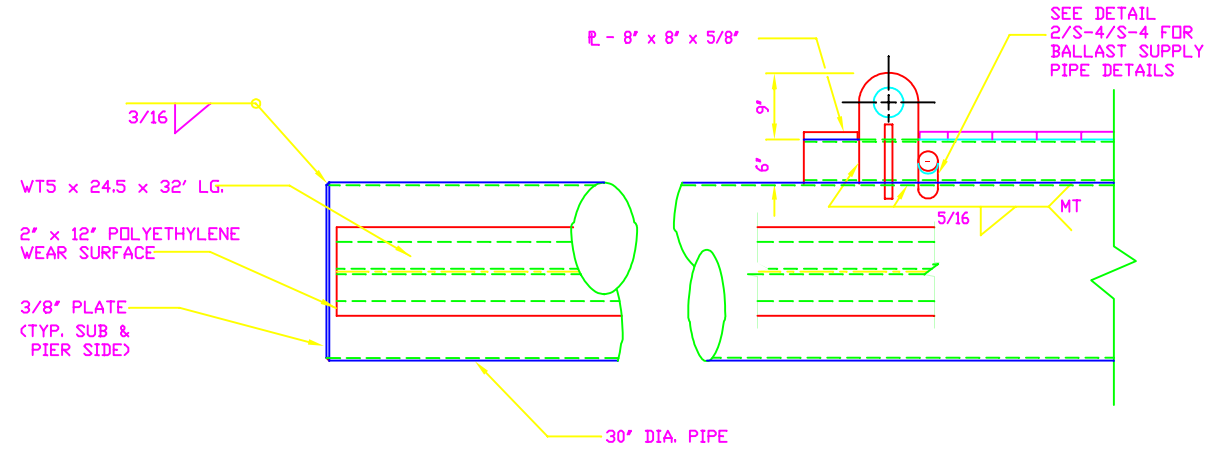


SECTION 1 (S-2 | S-4)
SCALE: 1" = 1'-0"

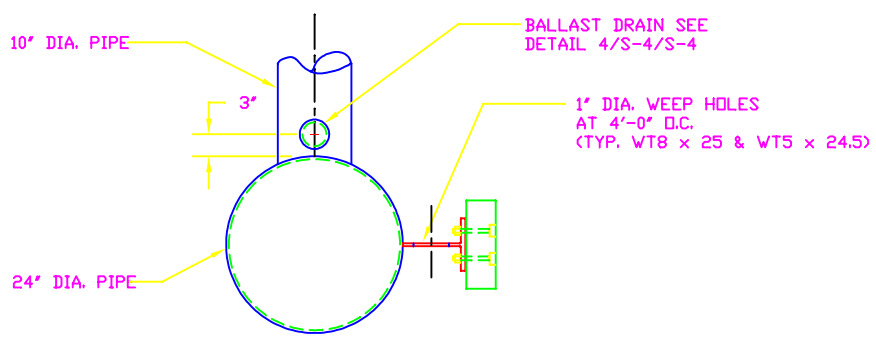


SECTION 3 (S-2 | S-4)
SCALE: 1" = 1'-0"

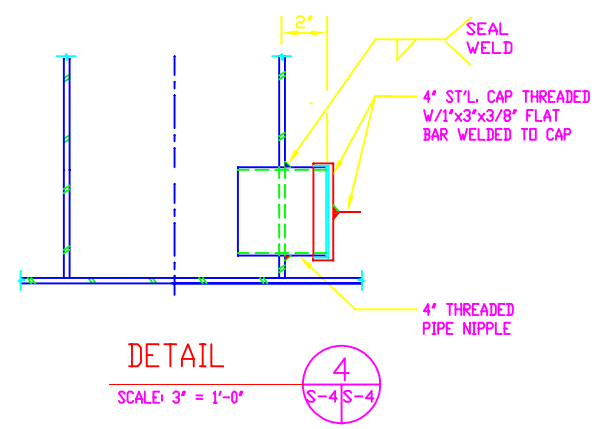


DETAIL 4 (S-4 | S-4)
SCALE: 3" = 1'-0"

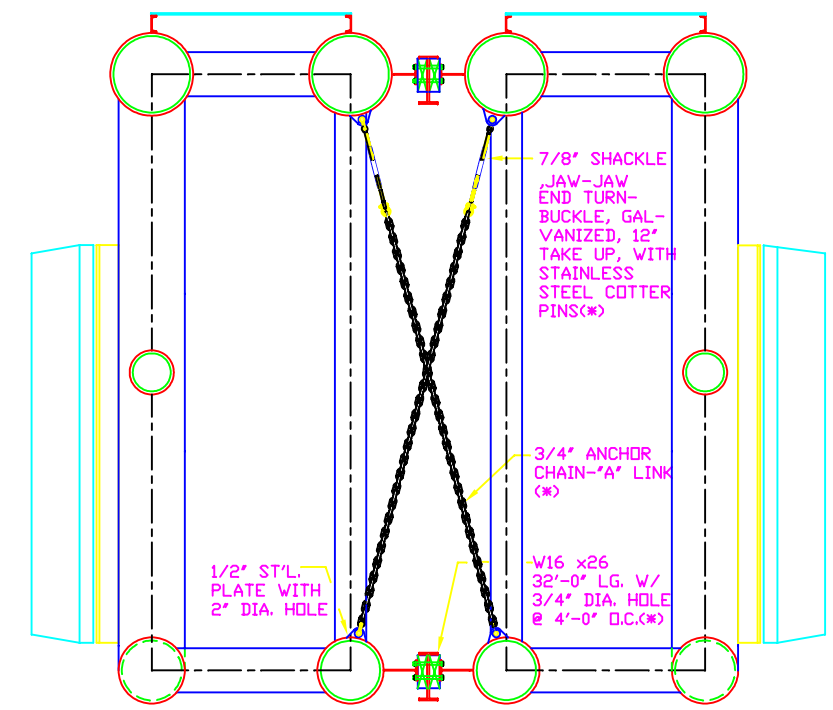


CAMEL/SEPARATOR CONCEPT

(*)-HARDWARE TO JOIN CAMELS AS A SEPARATOR IS NOT IN CONTRACT. IT IS SHOWN FOR INFORMATION ONLY.

SECTION 1A (S-2 | S-4)
SCALE: 3/8" = 1'-0"

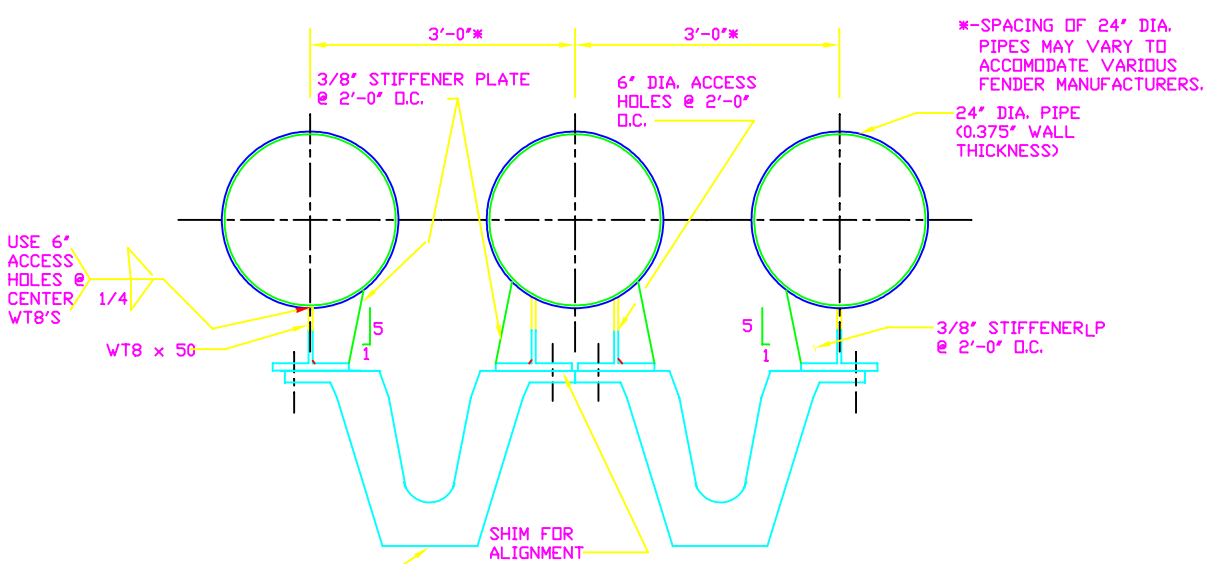


DETAIL A (S-2 | S-4)
SCALE: 1" = 1'-0"

GRAPHIC SCALES

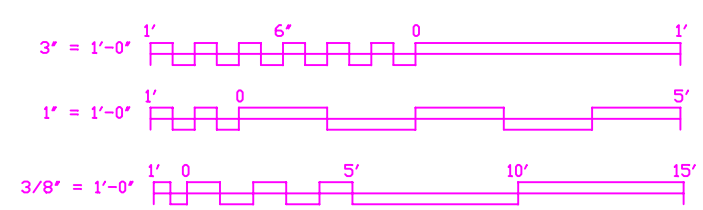


REVISIONS

| SYM. | DESCRIPTION | DATE | APPROVED |
|---|---|---|---|
| | | | |
| | | | |

S-4

| SYMBOL | DESCRIPTION | PREPARED BY | DATE | APPROVED BY |
|---|---|---|---|---|
| | | | | |

REVISIONS

ATLANTIC DIVISION
NAVAL FACILITIES ENGINEERING COMMAND
NORFOLK, VIRGINIA 23511-6287

LANTNAVFACENGCOM

CHIEF ENGINEER IN CHARGE — BRANCH MANAGER
CAPITAL ZONE MANAGER — DIVISION DIRECTOR
NAVFAC/ROANOKE
FIRE PROTECTION ENGINEER — DATE
CAPITAL ZONE MANAGER — DATE
APPROVED — DATE
FIRE COMMANDER, NAVFAC/ROANOKE

SATISFACTORY TO — DATE
FIR COMMANDER, NAVSTA/SCTN

DEPARTMENT OF THE NAVY — WASHINGTON, D.C. 20350

NAVAL FACILITIES ENGINEERING COMMAND

STANDARD DRAWING

# ATTACK SUBMARINE CAMEL

## MISC. FITTING DETAILS

| SIZE | CODE IDENT NO | NAVFAC DRAWING NUMBER | SHEET |
|---|---|---|---|
| D | 80091 | 1404670 | 4 |
| SCALE: AS NOTED | | CONTRACT NO | OF 4 |
| CATEGORY CODE: 159-00 | | SPEC NO: NFSS-C49 | |