Naval Facilities Engineering Command
200 Stovall Street
Alexandria, Virginia 22332-2300

APPROVED FOR PUBLIC RELEASE

0525-LF-458-9900

P-433

JULY 1991

NAVAL CONSTRUCTION FORCE

# WELDING MATERIALS HANDBOOK

DISTRIBUTION

SNDL (One copy to each addressee unless otherwise indicated)

27G COMNAVSUPPFORANTARCTICA
39B COMCBLANT/COMCBPAC (2 ea)
39C NCR 20TH, 31ST (4 ea)
39D NMCB-1,3,4,5,7,40,74,133(4ea)
39E PHIBCBONE/PHIBCBTTVO (4 ea)
39F COM20THNCR DEPLOYED SUPPORT DIV Gulfport (4 ea)
39G UCT-1, UCT-2 (2 ea)
391 CBMU-302 (2 ea)
39R COMFIRSTNCB (30 ea)
A3 CNO (OP44)
FA32 CBU41O, 411,412,414,415,420, 423 (2 ea)
FB41 CBU-405, 406,409,413,416,417, 418,421 (2 ea)
FF49 CBU-403, 422
FKAIC NAVFACENGCOM (FAC 06)(4 ea) (09M13)
FKM22 ASO NAVPUBFORM (100 ea)
FKN2 CBC Davisville, Gulfport, PorHue (4 ea)
CED Davisville, Gulfport, PorHue (2 ea)
FKN3 OICC
FKN5 PWC NAVFACENGCOM
FKNl1 NAVCIVENGRLAB (Code L41 ) (2 ea)
FTl CNET
FT18 CBU-401,402,404,407,408,419(2ea)
FT20 NAVCONSTRACEN Gulfport, PorHue (150 ea)
FT78 NAVEDTRAPRODEVCEN (Code 3 152)
COMCBPAC DET CAT GUAM (7 ea)
COMRNCF/lST RNCB
RNMCB-2, 12, 13, 14, 15, 16, 17, 18,20,21, 22,23,24,25,26,27,28

Additional copies may be obtained from:
Commanding Officer (Code 1571)
NCBC, Port Hueneme, California 93043-5000

Naval Publications and Forms
Navy Aviation Supply Office
5801 Tabor Ave., Phila. PA 19120-5099

ACKNOWLEDGEMENTS

While the government neither recommends or endorses the products or manufacturing firms mentioned below, acknowledgment is hereby extended to the following organizations for contributing information necessary for the development of this handbook:

MARCO COMPANY: For information incorporated in Section 1.

THE STOODY COMPANY: For information incorporated in Section 2.

THE LINCOLN ELECTRIC CO: For information incorporated in Section 2.

MOLECULAR CONSERVATION, INCORPORATED: For information reprinted in Section 3.

MAPP PRODUCTS: For information incorporated in Section 4.

# FOREWORD

This handbook describes various welding materials and techniques available to the SEABEE welder. The emphasis is placed upon interchangeability of materials ordinarily found in the Naval Construction Forces Table of Allowance. Although complete coverage of all possible materials and their various applications is not furnished, the data provided in this handbook will cover a majority of maintenance situations. The referenced welding materials can be requisitioned from the supporting Construction Battalion Centers. This handbook also describes several related maintenance techniques. These include: Wearfacing, MAPP Gas Welding, and some cold processes that can be substituted for welding procedures in certain maintenance applications.

This publication cancels and supersedes the NAVFAC P-433, January 1986 and has been reviewed and approved in accordance with SECNAVINST 5600.16A.

R. M. DEMPSEY
CAPTAIN, CEC, U.S. NAVY
Deputy Commander for Military Readiness
Naval Facilities Engineering Command

CHANGE RECORD

| Change No. | Date | Title and/or Brief Description | Signature of Validating Officer |
|---|---|---|---|
| | | | |

# CONTENTS

Page

SECTION 1 -WELDING MATERIALS. . . . . 1-1

Mild Steel-Arc-AWS/ASTME-6011 . . . . . 1-1
Mild Steel-Arc-AWS/ASTME-6012 . . . . . 1-2
Steel -Arc(low-alloy or mild) -AWS/ASTM E-7018 . . . . . 1-3
Steel - Arc (low-alloy, high-strength steels) - AWS/ASTM E-11018 . . . . . 1-4
Steel -GMA(low- to medium-carbon) -AWS/ASTME-70 S-3, orS-6 . . . . . 1-5
Steel -Torch or GTA(low- and medium-carbon) . . . . . 1-7
Brazing -Torch (flux-coated rod for general brazing) . . . . . 1-8
Steel . . . . . 1-9
Brazing -Torch (flux-coated rod for high-strength brazing) . . . . . 1-10
Silver Brazing Kits -Torch . . . . . 1-11
Cast Iron -Torch (flux-coated rod) . . . . . 1-11
Cast Iron -Arc (fully-machinable nickel base) . . . . . 1-12
Cast Iron -(fully-machinable) . . . . . 1-13
Cast Iron -Arc (machinable nickel-iron base) . . . . . 1-14
Brazing -Arc . . . . . 1-15
Aluminum -Arc (extruded flux-coated rod) E-4043 . . . . . 1-16
Aluminum -GMA (base spooled wire) E-5356 . . . . . 1-17
Brazing, Gas -Aluminum . . . . . 1-18
Zinc -Die Cast and Aluminum . . . . . 1-19

CONTENTS (Continued)

Page

Stainless - Arc (all steels - medium - high carbon, alloy, and tool steels) AWS/ASTM E 312-16 . . . . . 1-20
Buildup -Arc (tungsten, high speed) . . . . . 1-21
Overlay -Arc (manganese wearfacing) . . . . . 1-22
Buildup - Arc -tungsten . . . . . 1-23
Buildup -Arc (FeMn A-Class 3). . . . . 1-24
Overlay -Arc (intermediate wearfacing) . . . . . 1-25
Overlay -Arc (wearfacing - high abrasion) . . . . . 1-26
Chamfering or Gouging -Arc... . . . . 1-27
Graphite (carbon electrodes) . . . . . 1-28
Solder (tin -lead 50/50) ASTM 50A . . . . . 1-29
Solder (tin -lead 40/60 -acid core) ASTM 40A . . . . . 1-29
Solder (tin-lead 60/40-rosincore) . . . . . 1-30
Solder (tin-silver 96/4) . . . . . 1-30
Holding and Heat-Resisting Compound . . . . . 1-32
Surface-Hardening (Case) Compound . . . . . 1-33
Application Guides and Comparative Index . . . . . 1-34
Underwater Cutting (Electrode-Underwater Cutting) . . . . . 1-44

SECTION 2- WEARFACING . . . . . 2-1
Introduction . . . . . 2-1
Workpiece Preparation . . . . . 2-1

CONTENTS (Continued)

Page

Preheat . . . . . 2-1
Welding on Cast Iron . . . . . 2-3
Buildup Materials and Base Metals . . . . . 2-3
Workpiece Positioning . . . . . 2-4
Thickness of Hard-Facing Deposits . . . . . 2-4
Types of Wear . . . . . 2-11
  Abrasion . . . . . 2-11
  Impact . . . . . 2-11
  Heat . . . . . 2-11
  Corrosion . . . . . 2-12
Recommended Amperage and Polarity . . . . . 2-12
The Difference Between Cross-Checking and Cracking . . . . . 2-12
Oxy-MAPP Hard-facing . . . . . 2-13
  General Rules . . . . . 2-13
Flame Adjustments . . . . . 2-15

EARTH-MOVING AND HEAVY CONSTRUCTION EQUIPMENT . . . . . 2-16
Tractor Parts and Accessories . . . . . 2-17
  Track Rollers . . . . . 2-17
  Tractor Idlers . . . . . 2-17
  Tractor Rails . . . . . 2-18
  Top Carrier Rolls . . . . . 2-19

CONTENTS (Continued)

Page

Drive Sprockets . . . . . 2-20
Tractor Gousers . . . . . 2-21
Ripper Teeth . . . . . 2-21
Bulldozer End Bits . . . . . 2-22
Bulldozer Blades . . . . . 2-23
Ripper Shanks . . . . . 2-24
Rock Rake . . . . . 2-25
Shovel Parts and Accessories.. . . . . 2-27
Shovel Rollers . . . . . 2-28
Shovel Track Pads . . . . . 2-28
Shovel Idlers . . . . . 2-29
Shovel Drive Tumblers . . . . . 2-30
Shovel House Rolls . . . . . 2-30
Shovel and Dragline Buckets . . . . . 2-31
Shovel Teeth . . . . . 2-34
Shovel Bucket Tooth Adapters. . . . . 2-35
Shovel Latch Plates . . . . . 2-37
Shovel Latch Bars . . . . . 2-38
Shovel Boom Heels . . . . . 2-39
Cable Sheaves . . . . . 2-40
Dragline Pins . . . . . 2-41
Dragline Chains . . . . . 2-41

CONTENTS (Continued)


| | Page |
|---|---|
| Dragline Clevis | 2-42 |
| Clamshell Buckets | 2-43 |
| Power Shovel Transmissions.. | 2-46 |
| Shovel Ring Gears | 2-46 |
| Shovel Swing Gears | 2-47 |
| Horizontal Travel Gears | 2-47 |
| House Rings | 2-48 |
| Shafts | 2-48 |
| Ditchers and Hole Augers | 2-49 |
| Ditcher Drive Segments | 2-49 |
| Ditcher Rolls | 2-50 |
| Ditcher Drive Sprockets | 2-50 |
| Ditcher Teeth | 2-51 |
| Post Hole Augers | 2-52 |
| Asphalt Mixers and Pavers | 2-53 |
| Asphalt Mixer Paddles | 2-53 |
| Asphalt Mixer Paddle Shanks | 2-54 |
| Paving Machine Paddles | 2-54 |
| Paving Agitator Blades | 2-55 |
| Paving Screw Conveyors | 2-55 |
| Scraper Cutters and Sides | 2-56 |
| Scraper Blades | 2-57 |

CONTENTS (Continued)

Page

Grader Blades . . . . . 2-58
Grader End Bits . . . . . 2-58
Scooplift Buckets . . . . . 2-59
Grapple Tines . . . . . 2-60
Grid Compactors . . . . . 2-60
Sheepsfoot Tampers . . . . . 2-61
Curbing Machine Augers . . . . . 2-63
Backhoe Sidecutters . . . . . 2-64
Trencher Teeth . . . . . 2-65
Shredding Hammers . . . . . 2-66

CRUSHING, GRINDING, AND SCREENING EQUIPMENT. . . . . 2-67
Rebuilding and Hard-facing Crusher Roll Shells . . . . . 2-67
Initial Rebuild and Hard-face of Shells . . . . . 2-67
General Recommendations . . . . . 2-67
When to Reapply Hard-facing . . . . . 2-67
Rebuilding Shells with the Manual Process . . . . . 2-71
Rebuilding Procedure . . . . . 2-72
Hard-facing Crusher Shells with the Manual Process . . . . . 2-72
Welding Techniques . . . . . 2-73
How to Repair Cracked Manganese Rolls . . . . . 2-76
Hard-facing Rotor Type Impactors. . . . . 2-79

CONTENTS (Continued)

Page

Rotors and Bars . . . . . 2-79
Screen Grates . . . . . 2-79

OTHER QUARRY AND MINING EQUIPMENT. . . . . 2-80
Crusher Jaws. . . . . 2-80
Wobbler Feeder. . . . . 2-80
Crusher Points. . . . . 2-82
Scalping and Sizing Vibratory Screens . . . . . 2-82
Gravel Washer Auger Flights. . . . . 2-83
Log Washer Paddles. . . . . 2-84
Elevator Bucket Lips. . . . . 2-84
Quarry Drill Collars and Augers . . . . . 2-85

SECTION 3 -MOLECULAR METAL . . . . . 3-1
Introduction . . . . . 3-1
Components . . . . . 3-1
ATOMIZED METAL REPAIR COMPOUD (M-41). . . . . 3-2
ALLOY GP . . . . . 3-2
Applications . . . . . 3-2
Properties . . . . . 3-2
Directions For Use . . . . . 3-3
General Information . . . . . 3-3

CONTENTS (Continued)

Page

ATOMIZED METAL REPAIR COMPOUND (M-42) . . . . . 3-6
SMOOTHCOAT . . . . . 3-6
Applications . . . . . 3-6
Properties . . . . . 3-6
Directions For Use . . . . . 3-7
General Information . . . . . 3-7
ATOMIZED METAL REPAIR COMPOUND (M-43) . . . . . 3-10
SMOOTHCOAT LIQUID . . . . . 3-10
Applications . . . . . 3-10
Properties . . . . . 3-11
Directions For Use . . . . . 3-11
General Information . . . . . 3-12
ATOMIZED METAL REPAIR COMPOUND (M-43) . . . . . 3-14
RAPIDSTEEL . . . . . 3-14
Applications . . . . . 3-14
Properties . . . . . 3-15
Directions For Use . . . . . 3-15
General Information . . . . . 3-16

SECTION 4- MAPP GAS . . . . . 4-1
Introduction, . . . . . 4-1
Mapp Gas is Safe . . . . . 4-1

CONTENTS (Continued)


| | Page |
|---|---|
| Disadvantages | 4-1 |
| Breaktkough in Performance | 4-1 |
| How to Set Up and Use a Welding or Cutting Unit | 4-2 |
| Setting Up | 4-2 |
| Lighting the Torch | 4-3 |
| Extinguishing the Torch | 4-3 |
| Welding and Brazing | 4-4 |
| Use of Welding Tips with Mapp Gas | 4-4 |
| Fusion Welding | 4-5 |
| Flame Adjustment | 4-5 |
| Carbon Steel Welding | 4-7 |
| Carbon Steel Pipe Welding | 4-9 |
| Cast Iron Welding | 4-9 |
| Aluminum Welding | 4-9 |
| Copper Welding | 4-9 |
| Brazing | 4-9 |
| Metallizing | 4-9 |
| Flame Hardening | 4-10 |
| How Flame Hardening Works.. | 4-10 |
| Carbon Content and Hardness | 4-10 |
| Quenching | 4-10 |

CONTENTS (Continued)


| | Page |
|---|---|
| Flame Hardenable Materials | 4-11 |
| Flame Head Design | 4-11 |
| How to Flame Cut with Mapp Gas | 4-11 |
| Preheat Flame Adjustment | 4-12 |
| Oxygen Pressure | 4-13 |
| Coupling Distance | 4-15 |
| Torch Angle | 4-16 |
| Travel Speed | 4-17 |
| Nature of the Workpiece | 4-17 |
| Tip Size and Style | 4-19 |
| Oxygen Supply | 4-19 |
| Starting a Cut | 4-20 |
| Special Cutting Jobs | 4-21 |
| Gouging | 4-21 |
| Piercing and Washing | 4-22 |
| Cutting Manganese Steel | 4-22 |
| Operation Procedures -Bulk Systems | 4-24 |
| Start Up Procedure | 4-24 |
| Temporary Shutdown Procedure | 4-24 |
| Extended Shutdown Procedure. | 4-24 |
| The Use of Antifreeze in Flashback Arrestor | 4-24 |
| Mapp Gas and Compressed Air Burner | 4-25 |

# FIGURES


| Figure No. | Title | Page |
|---|---|---|
| 2-1 | Hard-Facing Techniques | 2-5 |
| 2-2 | Cross-Checking and Cracking Comparison | 2-14 |
| 2-3 | Flame Adjustments for Hard-Facing | 2-15 |
| 2-4 | Tractor Parts and Accessories | 2-16 |
| 2-5 | Hard-Facing Track Rollers | 2-17 |
| 2-6 | Hard-Facing Tractor Idlers | 2-17 |
| 2-7 | Rebuilding Tractor Rails | 2-18 |
| 2-8 | Hard-Facing Top Carrier Rolls | 2-19 |
| 2-9 | Hard-Facing Drive Sprockets | 2-20 |
| 2-10 | Hard-Facing Tractor Grousers | 2-21 |
| 2-11 | Hard-Facing Ripper Teeth | 2-22 |
| 2-12 | Hard-Facing Bulldozer End Bits | 2-23 |
| 2-13 | Hard-Facing Bulldozer Blades | 2-24 |
| 2-14 | Hard-Facing Ripper Shanks | 2-25 |
| 2-15 | Hard-Facing Rock Rake Teeth | 2-26 |
| 2-16 | Shovel Parts and Accessories | 2-27 |
| 2-17 | Hard-Facing Shovel Rollers | 2-28 |
| 2-18 | Hard-Facing Shovel Track Pads | 2-29 |
| 2-19 | Hard-Facing Shovel Idlers | 2-29 |
| 2-20 | Hard-Facing Shovel Drive Tumblers | 2-30 |

## FIGURES (Continued)


| Figure No. | Title | Page |
|---|---|---|
| 2-21 | Hard-Facing Shovel House Rolls.... | 2-31 |
| 2-22 | Hard-Facing Shovel and Dragline Buckets | 2-33 |
| 2-23 | Hard-Facing Shovel Teeth | 2-34 |
| 2-24 | Repointing Shovel Teeth | 2-35 |
| 2-25 | Comparison of Hard-Facing Patterns for Shovel Teeth | 2-36 |
| 2-26 | Hard-Facing Shovel Bucket Tooth Adapters | 2-37 |
| 2-27 | Hard-Facing Shovel Latch Plates | 2-38 |
| 2-28 | Hard-Facing Shovel Latch Bars | 2-39 |
| 2-29 | Hard-Facing Shovel Boom Heels. | 2-39 |
| 2-30 | Hard-Facing and Rebuilding Worn Cable Sheaves | 2-40 |
| 2-31 | Hard-Facing and Rebuilding Dragline Pins | 2-41 |
| 2-32 | Hard-Facing and Rebuilding Worn Dragline Chains | 2-42 |
| 2-33 | Hard-Facing and Rebuilding Worn Dragline Clevises | 2-43 |
| 2-34 | Hard-Facing Clam Shell Buckets | 2-44 |
| 2-35 | Power Shovel Transmission Components | 2-45 |
| 2-36 | Hard-Facing and Restoring Worn Shovel Ring Gear Teeth | 2-46 |
| 2-37 | Hard-Facing and Restoring Worn Horizontal Travel Gear Teeth | 2-47 |
| 2-38 | Hard-Facing and Restoring Worn House Ring Gear Teeth | 2-48 |
| 2-39 | Hard-Facing and Restoring Worn Shafts | 2-49 |
| 2-40 | Hard-Facing Ditcher Drive Segments | 2-49 |

## FIGURES (Continued)


| Figure No. | Title | Page |
|---|---|---|
| 2-41 | Hard-Facing Ditcher Rolls | 2-50 |
| 2-42 | Hard-Facing Ditcher Drive Sprockets | 2-51 |
| 2-43 | Hard-Facing Ditcher Teeth | 2-51 |
| 2-44 | Hard-Facing Post Hole Augers. | 2-52 |
| 2-45 | Hard-Facing Asphalt Mixer Paddles | 2-53 |
| 2-46 | Hard-Facing Asphalt Mixer Paddle Shanks | 2-54 |
| 2-47 | Hard-Facing Paving Machine Paddles | 2-54 |
| 2-48 | Hard-Facing Paving Machine Agitator Blades | 2-55 |
| 2-49 | Hard-Facing Paving Machine Screw Conveyors | 2-55 |
| 2-50 | Hard-Facing Scraper Cutters and Sides | 2-56 |
| 2-51 | Hard-Facing Asphalt Mixer Scraper Blades | 2-57 |
| 2-52 | Hard-Facing Grader Blades | 2-58 |
| 2-53 | Hard-Facing Grader End Bits | 2-59 |
| 2-54 | Hard-Facing Scooplift Bucket Lips | 2-59 |
| 2-55 | Hard-Facing Grapple Tines | 2-60 |
| 2-56 | Hard-Facing Grid Compactor Grids | 2-60 |
| 2-57 | Hard-Facing Sheepsfoot Tampers | 2-62 |
| 2-58 | Hard-Facing Curbing Machine Augers | 2-63 |
| 2-59 | Hard-Facing Backhoe Sidecutters | 2-64 |
| 2-60 | Hard-Facing Trencher Teeth | 2-65 |
| 2-61 | Hard-Facing Shredding Hammers | 2-66 |

| Figure No. | Title | Page |
|---|---|---|
| 2-62 | Wear Measurement of Crusher Roll Shells | 2-67 |
| 2-63 | Preventing Warpage of Crusher Roll Shells | 2-69 |
| 2-64 | Welding Limits on Crusher Roll Shells | 2-70 |
| 2-65 | Insufficient and Proper Stepover Techniques Examples | 2-71 |
| 2-66 | Rebuilding Procedure for Crusher Roll Shells | 2-74 |
| 2-67 | Hard-Facing Crusher Roll Shells. | 2-75 |
| 2-68 | Crusher Roll Shell Rebuilding Technique | 2-75 |
| 2-69 | Repairing Cracked Manganese Crusher Rolls | 2-77 |
| 2-70 | Hard-Facing Rotor-Type Impactors | 2-78 |
| 2-71 | Rebuilding and Hard-Facing Crusher Jaws | 2-81 |
| 2-72 | Restoring Worn Areas on Wobbler Feeders | 2-82 |
| 2-73 | Hard-Facing Scalping and Sizing Vibratory Screens | 2-83 |
| 2-74 | Hard-Facing Gravel Washer Auger Flight | 2-83 |
| 2-75 | Hard-Facing Log Washer Paddles | 2-84 |
| 2-76 | Hard-Facing Elevator Bucket Lips | 2-84 |
| 2-77 | Hard-Facing Quarry Drill Collars and Augers | 2-85 |
| 4-1 | MAPP Gas Torch Tip Design | 4-5 |
| 4-2 | Preheat Flame Characteristics.. | 4-14 |
| 4-3 | Correct Measurement of Coupling Distance | 4-16 |
| 4-4 | Correct Torch Angles | 4-18 |
| 4-5 | MAPP Gas and Compressed Air Burner | 4-26 |

# TABLES


| Table No. | Title | Page |
|---|---|---|
| 1-1 | Cast Iron Application Guide | 1-35 |
| 1-2 | Copper, Brass, and Bronze Application Guide | 1-37 |
| 1-3 | Aluminum Application Guide | 1-39 |
| 1-4 | Stainless Steel Application Guide... | 1-40 |
| 1-5 | Steel Application Guide | 1-42 |
| 1-6 | Welding Rod Comparison Chart. | 1-45 |
| 2-1 | Metals Preheating Chart | 2-6 |
| 4-1 | Welding Tip Size and Application Using MAPP Gas | 4-6 |
| 4-2 | Welding Tip Counterbore Schedule | 4-8 |
| 4-3 | Oxy-Fuel Ratios/Flame Condition Comparisons | 4-12 |
| 4-4 | Hadfield's Manganese Steel Cutting Conditions | 4-23 |

## USES, PROCEDURES, AND CHARACTERISTICS

TYPE: **MILD STEEL - ARC** AWS/ASTM E-601 1

NSN: 9GD 3439-00-165-4173 (1/8X 14)
9GD 3439-00-165-4185 (5/32x 14)
9GD 3439-00-262-2655 (3/16X 14)

POSITION: All

POLARITY: AC or DC Straight or Reverse

RECOMMENDED AMPERAGES:
1/8 - 80 to 130
5/32 -130 to 160

USES:
**Primary:** Joining of mild steel.
**Secondary:** Good for galvanized steel. Substitute for cutting rod; soak coating and use on straight polarity. On sheet metal, use straight polarity for a forceful spray arc.

PROCEDURES:
**Flat:** Very short arc. Stay ahead of puddle and use a slight w-hipping motion.
**Vertical:** Start at the bottom and go to the top using a slight whipping motion. When welding from top to bottom, don't use any motion.
**Overhead:** Use same technique as the vertical bottom to top. Multipass for buildup.

CHARACTERISTICS :
Deep penetration, light slag, fast freezing deposit.

Tensile Strength: 62,000-72,000 psig

TYPE: **MILD STEEL - ARC** AWS/ASTM E-6012

NSN: 9GD 3439-00-947-5383 (3/32X 14)
9GD 3439-00-165-4176 (1/8X 14)
9GD 3439-00-165-4175 (5/32x 14)

POSITIONS: All

POLARITY: AC or DC Straight

RECOMMENDED AMPERAGES:
3/32 - 40 to 90
1/8 - 80 to 120
5/32 -120 to 190

USES:
**Primary:** Joining of mild steel. Small-diameter rods for sheet metal, large-diameter rods for fillets and poor fit-up.
**Secondary:** A fast electrode for overlaying and cladding of worn and undercut surfaces prior to wearfacing.

PROCEDURES:
On flat butt joints, hold the rod at a right angle to the plate. On horizontal fillets, the rod is held 30 to 45 degrees with horizontal and at a right angle to the longitudinal axis. Weld vertical from top down. Use a whipping motion when welding from bottom to top. For overhead work, use a slight whipping motion.

CHARACTERISTICS :
Shallow to medium penetration, medium heavy slag, smooth bead, low spatter loss. Excellent for rusty metal.

Tensile Strength: 67,000-80,000 psig

TYPE: **STEEL - ARC** (low alloy or mild)
AWS/ASTM E-7018

NSN: 9GD 3439-00-165-4186 (1/8X 14)
9GD 3439-00-479-1099 (5/32X 14)
9GD 3439-00-853-2719 (3/16X 14)

POSITION: All

POLARITY: AC or DC Reverse

RECOMMENDED AMPERAGES:
1/8 -100 to 150
5/32 -120 to 200

USES:
**Primary:** Excellent for joining low-alloy structural steels such as Cor-Ten, Mayari R, Lukens 45 and 50, or Yoloy. Use for welding well casings.
**Secondary:** Joining all mild steels. Buildup prior to wearfacing.

PROCEDURES: Hold a short arc and use a slight weave.
**Flat:** Use a high side of current range - weave up to 2 1/2 times diameter of rod.
**Vertical:** Make root pass with a straight upward progression and a short arc Some welders prefer a V shape motion for root passes. Hesitate at point of the "V" in the root to assure penetration. Each leg of the "V" should be about 1/8 in. No whipping should be done. On subsequent passes, weave across the face of the root, continuously building up a shelf. The weave should pause at the sides of the first pass to clear out trapped slag.
**Overhead:** Use only stringer beads. Fillets should be made with electrode at a 30 degree angle off the vertical leg.
**Horizontal:** Use stringer beads for fillets; direct rod into joint at a 45 degree angle. On subsequent passes, use only stringer beads.

CHARACTERISTICS:
Soft arc, low spatter, good bead contour and wetting actions, produces highest quality X-ray deposits. Good impact resistance at normal and sub-zero temperatures. Excellent for high-sulfur (free machining) steels, and cold rolled steels.

Tensile Strength: 70,000-78,000 psig

TYPE: **STEEL - ARC** (low-alloy, high-strength steels) AWS/ASTM E-11018

NSN: 9GD 3439-00-165-4167 (1/8X 14)
9GD 3439-00-165-4165 (5/32X 14)

POSITION: All

POLARITY: AC or DC Reverse

RECOMMENDED AMPERAGES:
1/8 - ll0 to 150
5/32 -120 to 200

USES:
**Primary:** Joining of low-allow, high-strength steels such as T-1, HY-80, HY-90, HY-100, SSS100 and Jalloy 90 and 100.
**Secondary:** Substitute for buildup for wearfacing. (NOTE: This rod is prefened over mild steel electrodes for wearfacing buildup.)

PROCEDURES:
Hold a short arc and use a slight weave.
**Flat:** Use high side of current range; weave up to 2 1/2 times diameter of rod.
**Vertical:** Make root pass with a straight upward progression - short arc. Some welders prefer a "V" shape motion for root passes. Hesitate at "V" point in the root to assure penetration. Each "V" leg should be about 1/8 inch. Do not use whipping motion. On subsequent passes, weave across the face of the root to continuously build up a shelf. The weave should pause at the sides of the first pass to clear out trapped slag.
**Overhead:** Use only stringer beads. Fillets should be made with electrode at a 30-degree angle off the vertical leg.
**Horizontal:** Use stringer beads for fillets; direct rod into joint at a 45-degree angle. On subsequent passes. use only stringer beads.

CHARACTERISTICS:
Fast, efficient metal transfer. Deposits have good X-ray quality and excellent tensile and impact properties.

Tensile Strength: 110,000-114,000 psig

TYPE: **STEEL - GMA** (low-to-medium-carbon) AWS/ASTM E-70, S-3, or S-6

NSN: 9GD 3439-00-593-2241
(.035 X 2 1/2 lb. spool)
9GD 3439-00-903-7832
(.045 x 25 lb. roll)

POSITION: All

POLARITY: DC Reverse

**WELDING DATA - ALL POSITIONS**

| Material Thickness (in.) | Amps | volts | Travel Speed (ipm) |
|---|---|---|---|
| .037 | 70 | 17 | 20-40 |
| .050 | 85 | 18 | 20-50 |
| .062 | 100 | 18 | 25-35 |
| .125 | 150 | 20 | 15-25 |
| .187 | 150 | 20 | 10-20 |

(NOTE: The above are typical values. Specific welding applications may require changes.)

USES:
**Primary:** Used for most mild steels.
**Secondary:** Buildup for wearfacing.

PROCEDURES:
During welding, wire stickout (tip to work distance) should be approximately 5/16 in. Poor fit up will require lower amps and slower speed. At 17 volts or less, Argon-$C0_2$ mixtures may offer better arc characteristics than $C0_2$. Use only welding grade $C0_2$ gas at a flow of 15-20 cubic feet per hour. Mixed gas should be 75-percent argon to 25-percent $C0_2$. Use wind shield and increase flow rate in windy conditions. This wire can be used with the GMA Spool-On Gun.

CHARACTERISTICS:
**Remember!** You do not have a flux to purge the deposited molten metal; only a shielding gas prevents the atmosphere from coming in contact with the arc stream. Any moisture, dirt, or oil on the base material, welding wire, or feed rolls will cause a defective weld.

Tensile Strength: 78,000 psig

TYPE: **STEEL - TORCH or GTA**
(low- and medium-carbon)

NSN: 9GD 3439-00-018-1625 (1/16X 36)
9GD 3439-00-165-4198 (3/32X 36)

(NOTE: This triple deoxidized rod should be used if gas welding with MAPP Gas. It can also be used with acetylene gas.)

USES:
Gas welding or GTA welding of low- and medium-carbon steel where properties similar to those of the base metal are required or when the welded joint is subjected to heat. Small parts can be fabricated faster and with less distortion by using a brazing rod (NSN 9GD 3439-00- 165-4199). If joint strength is important, use NSN 9GD 3439-00-027-0953.

MISCELLANEOUS USES:
For faster buildup with arc, feed this rod into arc stream of the electrode. If you have a wearfacing rod that is too hard for impact, feed this rod into arc stream. If you wish to cut stainless or cast iron with the torch, feed this rod into the kerf.

Tensile Strength: 62,000 psig

TYPE: **BRAZING - TORCH**
(flux-coated rod for general brazing)

NSN: 9GD 3439-00-165-4199 (1/8X 18)
9GD 3439-00-165-4197 (3/16X 18)
9GD 3439-00-252-8357 (1/4X 18)

USES:
Joining of steel and cast iron and most copper-based metals, such as brass and bronze. Can be used on some nickel alloys.

(NOTE: Keep base metal of nickel alloys at lowest possible temperature.)

Ideal for dissimilar metal combinations. Can be used to build up frictional wear-resistant surfaces that requir hardness of approximately 80 Brinell or 47 Rockwell B.

PROCEDURES:
Clean joint and bevel heavy sections. On cast iron, use an excess oxygen flame to sear the weld area to a blue heat. Preheat heavy sections to 800°F. Apply flux to weld area and continue heating until flux melts. Melt off a drop of the rod and flow it out - continue to add more alloy drop by drop.

CHARACTERISTICS :
A low-fuming bronze rod that does not require fusion of the surface of the base metal. Flux for this rod is NSN 9GD 3439-00-255-4580.

Tensile Strength: 60,000 psig

TYPE: **STEEL**

NSN: 9GD 3439-00-262-2649 (5/32)
9GD 3439-01-155-2376 (1/8)
9GD 3439-00-262-3876 (1/4)

POSITION: All

POLARITY: AC-DC

RECOMMENDED AMPERAGES:
5/32 -80 to 175

USES:
Maintenance or production general welding fabrication. Light and heavy gauge fabrication for tanks, machinery, frames, plates, angles, beams, sheet metal.

PROCEDURES:
Clean weld area, bevel heavy sections. Set amperage and hold close arc. Electrode can be dragged for some applications. Controllability of slag and non-bum through characteristics makes vertical down or up very easy.

CHARACTERISTICS:
Excellent weld appearance. Free of spatter loss. Light blue tip.

Tensile Strength: 80,000 psig

Yield Strength: 68,000 psig

Elongation: 26-28 percent

TYPE: **BRAZING - TORCH** (flux - coated rod for high-strength brazing)

NSN: 9GD 3439-00-027-0953 (1/8X 18)

USES:
**Primary:** Torch joining of **all** carbon and alloy steels, including tool steel and carbides. Excellent for repairing broken drills and joining extensions to drills and reamers.
**Secondary:** For joining and repairing nonferrous metals, **except** aluminum, magnesium and die cast zinc.

PROCEDURES:
When using as a thin flowing alloy and extra flux is not available, break off and pulverize some of the flux coating and mix it with a few drops of water to form a paste to paint the joint area.

Clean joint thoroughly - close fit the joint with about 0.003 in. clearance. Heat with neutral flame until preplaced flux liquefies - apply rod - continue heating on each side of joint until alloy penetrates the joint. When using as a bead-forming alloy, bevel heavy pieces into a 60-900 vee and apply as a brazing rod. Do not melt base metal.

CHARACTERISTICS :
A flux-coated brazing alloy of high strength. Bonding temperature -1400- 1600°F. Use NSN 9GD 3439-00-165-4199 for brazing and for jobs not requiring high strength.

Tensile Strength: 100,000 psig.

TYPE: **SILVER BRAZING KITS - TORCH**

NSN: 9GD 3439-01-047-4141 (3/64x 34)
(per Kit plus dry flux)
9GD 3439-01-030-2412 (1/16)

USES:
For **all** silver brazing applications on ferrous and non-ferrous metals (except the white metals). Use specifically for instrumentation, tubing, controls, switches, and similar devices. Excellent for food vessels, laboratory apparatus, and hospital equipment.

PROCEDURES:
Clean thoroughly, heat broadly along the joint line with a carburizing flame. Touch rod into jar of dry flux and flow into joint, then feed rod into joint. Keep flame at least 1 in. from joint. Continue feeding rod until fillet is observed. When paste flux is needed, mix with a few drops of water to form a paste and paint the area where a preplaced flux is desired. Flux can be removed by quenching in water. Joint clearance should be between 0.002 and 0.003 in. for maximum strength. For color match on stainless, coat silver solder deposit with tin-silver solder 96/4 on page 1-40.

CHARACTERISTICS:
Since this alloy does not contain cadmium, it is safe to use on any food or beverage equipment. Use this rod only where the work is small, delicate, or requires joining by use of a torch at low temperatures. This alloy's thin, flowing properties make it ideal for lap, square butt, and "T" joints because capillary action causes it to fill small-clearances and achieve higher strength bonds.

Temperature: 1145- 1205°F

Tensile Strength: 85,000 psig

TYPE: **CAST IRON - TORCH** (flux coated rod)

NSN: 9GD 3439-00-027-0953 (1/8X 18)
9GD 3439-00-254-5038 (1/4X 18)

USES:
**Primary:** A general-purpose, cast iron alloy for torch joining of gray cast iron. Use this rod when weld deposit must have physical properties (resistance to bending, corrosion, heat resistance) similar to the base metal. A cast iron manifold, built to withstand heat, should be welded with this rod because it deposits a weld that will withstand exhaust heat and expand and contract at the same rate as the manifold.

**Secondary:** Use on cast iron parts too small and thin to arc weld. When no hard face rod is available, it will make a hard deposit if applied as an arc rod.

PROCEDURES:
Bevel breaks and cracks to forma 75-90° vee. Use neutral flame and preheat uniformly. Keep torch in constant motion. Melt a small amount of flux from the rod and continue heating until the flux liquefies from the heat of the base metal. At this temperature, melt off a drop of the rod and flow it out. Continue depositing alloy drop by drop, using a weaving motion of the torch. Slowly cool by covering with lime.

CHARACTERISTICS:
Deposits are color matching and dense with similar properties of cast iron. The deposit will be machinable if cooled slowly.

Bonding Temperature: 1400- 1600°F

Hardness: 200 Bhn (slow cooled)

Tensile Strength: 40,000 psig

TYPE: **CAST IRON - ARC**
(fully-machinable nickel base)

NSN: 9GD 3439-00-262-2743 (l/8x14)

POSITION: All

POLARITY: AC or DC Straight or Reverse

RECOMMENDED AMPERAGES: 1/8 -55 to 110

USES:
Primary: For welding cast iron in all positions where the weld must have high ductility and machinability y in the bonded zone.
Secondary: For joining cast iron to all other metals except the white metals. It can be used for welding nickel, monel, stainless and copper alloys when the proper rods for these metals are not available. Can be used as a cushion for wearfacing.

PROCEDURES:
Bevel breaks and cracks 75-900 vee. Use the gouging rod (NSN 9GD 3439-00-453-5950) to remove unwanted met al. For best machinability, preheat to 400°F to reduce cooling rate. Use a short to medium arc at the lowest amperage possible. Peen lightly to relieve stress. Skip weld to prevent excessive local heat. Cool casting slowly.

CHARACTERISTICS:
Excellent for out-of-position welding. Bare rod may be used for GTA welding of the above metals. This rod is hot short; do not permit casting to overheat. Support properly during welding.

Tensile Strength: 50,000 psig

NOTE: If a nonconductive coating is required in tight fitting areas where arcing through the coating would be undesirable - use Marcoloy #302.

TYPE: **CAST IRON** (fully-machinable)

NSN: 3439-01-135-3913 (1/8)
3439-01-135-3914 (5/32)

POSITION: All

POLARITY: AC-DC Reverse

RECOMMENDED AMPERAGES:
3/32 - 50-90
1/8 - 85-120
5/32 -100-140

USES:
Repair machining errors. Fill sand pockets, holes and defects. Buildup and welding of gear teeth, cracks in housings, blocks and cases.

PROCEDURES:
Clean weld area. Bevel crack. Use stringer beads (short deposits) to avoid overheating area.

CHARACTERISTICS :
Green tip. Nonconductive coating. Excellent purging characteristics.

Tensile Strength: 56,000 psig

**NOTE:** If a nonconductive coating is required in tight fitting areas where arcing through the coating is undesirable - use Marcoloy #302.

TYPE: **CAST IRON - ARC**
(machinable nickel-iron base)

NSN: 9GD 3439-00-165-4189 (1/8X 14)
9GD 3439-00-165-4188 (5/32X 14)

POSITION: All

POLARITY: AC or DC Reverse

RECOMMENDED AMPERAGES:
1/8 - 80 to 120
5/32 -90 to 140

USES:
**Primary:** For welding of gray and alloyed cast iron. The deposits give greatest crack resistance and should be used where weld is subject to air, gas, or liquid pressure. Use to repair pump housings, valves, pressure chambers, cast, and malleable fittings. Excellent for crack-sensitive jobs such as joints under restraint, dissimilar thicknesses, and the welding of heavy sections. Can be used to join cast iron to steel.
**Secondary:** Buildup for hardfacing on cast iron.

PROCEDURES:
Bevel cracks using gouging rod (NSN 9GD 3439-00-453-5950), Keep uniform heat through welded section. On casting of dissimilar thickness, maintain interpass temperature of 5000 F. Peen lightly to relieve stress. Cool casting slowly.

CHARACTERISTICS:
If one section of the casting can move freely during welding, the welding can be continuous so the welding job can be finished quickly. The weld deposit is not hot short like NSN 9GD 3439-00-909-7951.

Tensile Strength: 55,000-60,000 psig

TYPE **BRAZING - ARC**

NSN: 9GJ 3439-00-262-2739 (1/8x14)
9GD 3439-01-131-4934 (5/32X 14)

POSITION: Flat

POLARITY: DC Reverse

RECOMMENDED AMPERAGES:
1/8 - 80 to 160
3/16 -130 to 250

USES:
**Primary:** For high-strength joints on cast iron, steel, and copper alloys. For joints and dissimilar combinations susceptible to cracking. Excellent for overlaying surfaces subject to frictional wear and corrosive attack by salt water.
**Secondary:** Can be used for joining stainless, nickel, and nickel alloys.

PROCEDURES:
Bevel crack to 90° angle. Preheat heavy steel and cast iron sections to 200°F. Preheat heavy copper alloy sections 250- 400°F (except silicon, bronze). Use medium arc gap. (NOTE **USE GOOD VENTILATION.** Hold electrode 10-15 degrees off perpendicular.)

CHARACTERISTICS:
Has rapid deposition rate. Deposit is a copper-base alloy.

Hardness: Deposited 130 BHN
Work Hardens to 230 BHN

Tensile Strength: 90,000 psig

TYPE: **ALUMINUM - ARC**
(extruded flux-coated rod) E-4043

NSN: 9GD 3439-00-803-9496 (3/64x14)
9GD 3439-00-165-4177 (1/8X 14)
9GD 3439-01-139-3498 (5/32X 14)
9GD 3439-00-246-0541 (3/16X 14)

POSITION: Flat, horizontal, or vertical

POLARITY: DC Reverse

RECOMMENDED AMPERAGES:
1/8 - 90 to 140
5/32 -125 to 175

USES:
**Primary:** Arc welding of all weldable grades of aluminum in extruded, plate or sheet, and sand and die castings. Use for welding aluminum landing mats when GMA is not available or dirt, moisture, or wind make GMA impractical.
**Secondary:** Use with torch for welding aluminum. To make an aluminum paste flux, break flux off rod, pulverize, mix with a few drops of water. Can be used with carbon arc, To use as a TGA rod, remove flux.

PROCEDURES:
Bevel 1/8 in. or heavier to 750 vee. On heavy sections, preheat to 400°F. Maintain short arc. Hold electrode almost perpendicular to work or slightly in direction of travel. Back whip at crater. Chip slag before quenching. Use Marcoloy #500.

CHARACTERISTICS:
Keep rod dry; flux will absorb moisture from the air easily.

Tensile Strength: 25,500 psig

TYPE: **ALUMINUM - GMA**
(Base Spooled Wire) E-5356

NSN: 9GD 3439-00-803-9498
(3/64 X 1 lb. spool)

POSITION: All

POLARITY: DC Reverse (Argon or helium gas)

RECOMMENDED CURRENT SETTINGS:
(3/16 plate-flat)

| volts | Amen (cfh) | Amps |
|---|---|---|
| 23-25 | 30-40 | 160-180 |

| Weld Speed in Min |
|---|
| 22-26 |

(NOTE: There is a different setting for each plate, thickness, type of joint and position. Most of your welding will be in the above ranges.)

USES:
This wire is recommended for welding 5056,5083, 5086,5154, and 5356 aluminum alloys. **USE THIS WIRE FOR WELDING ALUMINUM LANDING MATS.**

PROCEDURES:
Wire and joint to be welded must be clean. Set your machine and gas flow to the above settings and test on a piece of scrap of similar thickness and type of joint in the position you will be welding. Dirt on your work, wire or feeding mechanism, or inadequate gas coverage of your molten weld puddle will result in porosity. Check for leaks into gas flow.

CHARACTERISTICS:
For general maintenance, use flux coated arc aluminum rod on page 1-23. Save this wire for welding aluminum landing mats.

Tensile Strength: 40,500 psig

Yield Strength: 21,000 psig

TYPE: **BRAZING, GAS —ALUMINUM**

NSN: 9GD 3439-01-030-2509 (3/32)
9GD 3439-00-255-4576 (Flux)

POSITION: Flat

USES:
Joining of thin wall tubing, T-joints, lap and flanges, sheets, extrusions, repair of aluminum furniture, automotive trim, radiators, window frames, air conditioning parts, motorcycle parts.

PROCEDURES:
Remove all grease, dirt, oil and oxides. Dip rod into Marcoloy #1500 Flux or mix flux with alcohol or water and brush paste on weld area. Heat uniformly with reducing flame until flux liquifies, add alloy until it flows through joint. Cool slowly, wash flux thoroughly with water.

CHARACTERISTICS:
Yellow tip.

An extremely low melting aluminum alloy that features high strength welds on most aluminums without melting the base metal.

Tensile Strength: 33,000 psi

Bonding Temp: 1070°F

TYPE: **ZINC DIE CAST and ALUMINUM**

Size: 1/8

NSN: 9GD 3439-01-132-0140

Tensile Strength: 25,000 psig

USES:
Repair zinc die cast parts, automotive grills, carburetors, fuel pumps castings and kirksite dies. Aluminum castings and parts, such as sand holes, worn parts and machining errors, can be filled or overlayed, .

PROCEDURES:
Remove all grease, dirt, oil and oxides. Zinc die cast: Apply flux to surface, then heat with soft reducing flame until flux liquifies. Melt off rod and remove heat. Cool slowly. Wash flux off in water.
Aluminum: File or grind surface, use no flux, heat indirectly and keep rubbing alloy on surface until it wets out. Remove heat and allow to cool slowly.
TIG: No flux is required. Use high frequency AC and argon gas.

CHARACTERISTICS:
Brown Tip.

Melting Point: 700°F

TYPE: **STAINLESS - ARC** (all steels - medium, high carbon, alloy, and tool steels)
AWS-ASTM E 312-16

NSN: 9GD 3439-00-902-4209 (3/32X 14)
9GD 3439-00-165-4169 (1/8X 14)
9GD 3439-00-165-4166 (5/32X 14)
9GD 3439-00-165-4168 (3/16X 14)

POSITION: All

POLARITY: AC or DC Reverse

RECOMMENDED AMPERAGES:
3/32 - 50 to 90
1/8 - 90 to 120
5/32 -120 to 160
3/16 - 150 to 190

USES:
**Primary:** Use this rod when you need a high strength weld deposit or when highly stressed joints, vibration or shock continually cause weld failure. Use on all steels and where destructive combinations of wear, impact, corrosion, or heat are present.

**Secondary:** Can be used for welding stainless (no acid) and salt-water pipe lines. Can be applied as a buildup on manganese steel or any wear problem involving frictional wear and impact.

PROCEDURES:
Bevel 90°. Preheat alloy steels to 400°F. Hold a short arc. Use stringer beads. Run intermittent welds, especially on high alloy steel. Peen lightly to relieve stresses.

CHARACTERISTICS:
Bare rod can be applied with gas or GTA torch. Since many other rods are capable of doing jobs that this rod can do, conserve supplies and use it only for jobs requiring its high tensile strength properties.

Tensile Strength: 120,000 psig

TYPE: **BUILDUP - ARC** (tungsten, high speed)

NSN: 3439-00-105-9948 (1/4X 14)
3439-01-032-5978 (1/16 x 14)
3439-00-902-4210 (3/16 x 14)
3439-00-105-9945 (3/32 x 14)
3439-01-012-1002 (3/64 x 14)

POSITION: All

POLARITY: AC/DC, Straight/Reverse

RECOMMENDED AMPERAGES:
1/8 -100 to 160
1/4 -200 to 280
5/32 -140 to 180
3/16 -180 to 240

USES:
**Primary:** To repair or rebuild high speed tools without having to reharden the tool.
**Secondary:** Form tools, milling cutters, lathe bits, boring bars and other tools usually made entirely of high speed steel can be made compositely with only the cutting surfaces made of high speed steel.

PROCEDURES:
For composite fabrication of cutting tools: machine or grind surface, allow for approximately 3/16 in. of finished weld metal. Preheat to approximately 400ºF. Apply one pass of Marcoloy #200 to eliminate pickup of impurities from base metal to ensure sound, homogeneous deposit of high speed steel on the second pass.

CHARACTERISTICS:
This rod deposits a tungsten-moly high speed steel that can be used for compositely fabricating tools for a wide range of cutting conditions. Its “as-welded” deposit is exceptionally tough and maybe used for rough, deep cuts. It has good impact-resistant characteristics. Tempered, this weld is ideal for finishing cuts at higher speeds. Will hold its temper and cutting qualities up to 1050°F.

TYPE: **OVERLAY - ARC** (manganese wearfacing)

NSN: 9GJ 3439-00-165-4172 (5/32x 1/4)
9GD 3439-00-165-4187 (3/16X 1/4)

POSITION: All

POLARITY: AC - DC Reverse

RECOMMENDED AMPERAGES:
5/32 -110 to 140
3/16 -150 to 220

USES:
**Primary:** This electrode is used for buildup and overlay where severe impact and compression will be encountered. This rod is excellent for building up and joining manganese steel, for the restoration of buckets, bucket teeth and lips, and crushers. It can be used for joining steel to manganese, and steel to steel.
**Secondary:** Can be used for joining cast iron, if cast rod is not available.

PROCEDURES:
Clean and remove remains of previous cracked or brittle hard surfacing deposits. Keep the interpass temperature on manganese steels low (less than 500°F). This can be done by back stepping and skip-welding techniques that prevent localized overheating.

CHARACTERISTICS :
This is a manganese chrome nickel electrode. It can be used to build up worn steel parts, but should be held for manganese steel jobs if the supply is limited.

(NOTE: DO NOT BUILDUP MANGANESE CRUSHER ROLLS OR JAWS WITH A MILD STEEL ROD OR A STEEL BUILDUP ROD UNLESS STAINLESS ROD IS APPLIED FIRST.)

Hardness: As deposited RB 80-90
Work hardened RC 45-50

Tensile Strength: 150,000 psig

TYPE: **BUILDUP - ARC** - Tungsten

NSN: 3439-01-012-1002 (3/64)
3439-00-105-9945 (3/32)
3439-01-032-5978 (1/16)
3439-00-105-9948 (1/4)
3439-01-149-2831 (1/8)

POSITION: All

POLARITY: AC-DC Straight or Reverse

RECOMMENDED AMPERAGES: 135 to 175

USES:
**Primary:** For repairing or rebuilding high speed tools (without the need to reharden the tools), sprockets, rollers, tractor parts, excavator equipment, etc. Excellent for heavy padding when toughness and resistance to deformation is needed.

(NOTE: DO NOT USE AS A BUILDUP ON MANGANESE STEEL.)

TYPE: **BUILDUP - ARC** (FeMn A-Class 3)

NSN: 9GD 3439-00-752-7818 (3/16X 14)

POSITION: All

POLARITY: AC-DC Straight or Reverse

RECOMMENDED AMPERAGES:
3/16 -135 to 175

USES:
**Primary:** On ferrous (steel) parts subject to heavy shock loading and pounding. On hammers, sprockets, rollers, tractor parts, excavator equipment, etc. Excellent for heavy padding when high toughness and resistance to deformation is needed.

(NOTE: DO NOT USE AS A BUILDUP ON MANGANESE STEEL.)

**Secondary:** Can be used to join steel if steel rod is NOT available.

PROCEDURES:
On heavy sections, preheat 200- 300°F. Hold a short to medium arc and use a stringer or weaving technique. Do not allow excessive heat buildup in base metal. On large buildup, deposit succeeding layers across previous layer to minimize peeling.

CHARACTERISTICS: Deposits are machinable.

Hardness: RC30

TYPE: **OVERLAY - ARC** (intermediate wearfacing)

NSN: 9GD 3439-00-165-4182 (5/32X 14)
9GL 3439-00-165-4181 (3/16X 14)

POSITION: Flat, vertical, and horizontal

POLARITY: DC Reverse

RECOMMENDED AMPERAGES:
3/16 -140 to 200

USES:
On hard overlays subject to abrasive wear and medium impact. When overlaying cast iron, first apply two passes of cast iron rod, NSN 9GD 3439-00-165-4188.

PROCEDURES:
Preheat to about 200- 300°F on heavy sections. Use weaving or stringer technique while holding a short to medium arc. Do not allow excessive heat buildup in the base metal.

CHARACTERISTICS:
At least two passes must be used to reduce the effects of dilution.

Hardness: RC50

NOTE: For an electrode with all position characteristics, including overhead position, use MARCOLOY #702.

TYPE: **OVERLAY - ARC** (wearfacing - high abrasion)

NSN: 9GJ 3439-00-165-4178 (1/8X 14)
9GD 3439-00-165-4179 (5/32X 14)
9GD 3439-00-165-4180 (3/16X 14)

POSITION: Flat - horizontal

POLARITY: AC -DC Straight

RECOMMENDED AMPERAGES:
1/8 - 80 to 130
5/32 -100 to 160
3/16 -160 to 240

USES:
For applications that require resistance to high abrasion and erosion. (NOTE: use only where impact is low.)

PROCEDURES:
Use a medium arc with a slight weaving motion. A long arc is recommended when wide, thinner-flowing applications are desired. Do not weld beads longer than 6 inches, and stagger welds to reduce local heat build up. Use 1/8 in. diameter only on grader blades.

CHARACTERISTICS:
Any rate of cooling will give a high hardness.

Hardness: RC60

TYPE: **CHAMFERING or GOUGING- ARC**

NSN: 9GD 3439-00-453-5950 (1/8X 14)

POSITION: All

POLARITY: AC -DC Straight

RECOMMENDED AMPERAGES:
1/8 -250 to 350

USES:
**Primary:** This electrode can be used for chamfering or gouging all metals. Used for preparing sections prior to welding, gouging out unwanted or defective weld metal.
**Secondary:** Can be used for cutting or piercing all metals. Use to sear oil-soaked cast iron prior to welding by holding a long arc and rapidly passing over oil-soaked area.

PROCEDURES:
Insert electrode into electrode holder and point electrode, like a lance, in the direction of travel. Hold electrode at an angle not more than 300 with the plane of the work. Strike arc and push chamfering rod along the line of cut, quickly for a shallow groove, more slowly or with a weaving motion, for a deeper groove. If a deeper groove is required, repeat the procedure.

CHARACTERISTICS:
The coating on this rod is heat resistant and the arc's force is concentrated at the point of application.

NOTE: For carbon arc gouging and cutting use Marcolite Aluminum Carbons, 1/4x 12 inches (NSN 3439-01-138-3106, Electrode Carbon Arc Aluminum 1/4 for arc air.

TYPE: **GRAPHITE** (carbon electrodes)

NSN: 9GD 3439-00-262-4228 (3/8X 12)

POLARITY: DC Straight

USES:
Brazing of sheet metal (galvanized). Preheating and post-heating when a torch is not available. Cutting of all metals (when a cutting rod or torch can't be used). Soldering (small work) by shorting carbon electrode next to joint and feeding solder into a prefluxed seam. Use to plug holes prior to welding or brazing or on reverse polarity to deposit carbon to harden base metal.

CHARACTERISTICS:
Slow oxidation of the carbon electrode generates carbon monoxide and carbon dioxide; these gases offer some weld metal protection.

TYPE: **SOLDER** (tin - antimony 95/5)

NSN: 9GD 3439-00-088-8768 (1/8X 1 lb. spool)

USES:
Where moderately elevated temperature is a factor. This solder has a plastic range of 12 degrees; it melts at 452°F and flows at 464°F. It has a higher electrical conductivity than tin-lead solders and can be used where lead is objectionable. Do not use on aluminum, zinc, or zinc-coated metals such as galvanized iron. When stocks are depleted, use the tin-silver solder 96/4 on page 1-40.

PROCEDURES:
Clean and roughen surface as this solder makes a stronger joint on a rough surface than on a polished one. Joint clearances can be from 0.003 in. to a maximum of 0.010 in. An improper fit requires more solder and leaves the joint weaker. The flux to use is NSN 9GD 3439-00-255-4566. Remove flux residue after soldering joint.

TYPE: **SOLDER** (tin - lead 50/50) ASTM 50A

NSN: 9GK 3439-00-163-4347 (BAR)
9GD 3439-00-273-1637 (1/8X 5 lb. spool)

USES:
A general purpose solder recommended when a combination of a relatively narrow pasty range, good wetting properties, strength, and economy are desired. Can be used as a wiping and sweating solder and on radiator cores, electrical connections, heating units and roofing seams.

PROCEDURES:
Clean and roughen surface as this solder makes a stronger joint on rough surfaces than on polished ones. Joint clearances can be from 0.003 in, to a maximum of 0.010 in. An improper fit requires more solder and leaves the joint weaker. The flux to use is NSN 9GD 3439-00-255-4566. Remove flux residue after soldering joint.

Melting Temperature: 361°F

Flow Temperature: 421 ‘F

TYPE: **SOLDER** (tin - lead 40/60) ASTM 40A

NSN: 9GD 3439-00-188-6986 (3/8X 5 lb. spool)

USES:
This acid core, general purpose solder can be used extensively on sheetmetal work. It is cheaper than 50/50 solder and can be used in similar applications. No flux is needed on small work because of its acid core. (NOTE: <u>SEAL END OF WIRE AFTER</u> USING.)

PROCEDURES:
Clean and roughen surface as this solder makes a stronger joint on a rough surface than on a polished one. Joint clearances can be from 0.003 in. to a maximum of 0.010 in. An improper fit requires more solder and leaves the joint weaker. If more flux is needed, use NSN 9GD 3439-00-255-4566. Remove flux residue after soldering.

Melting Temperature: 361°F

Flow Temperature: 455°F

TYPE: **SOLDER** (tin - lead 60/40 rosin core)

NSN: 9GD 3439-00-184-8953 (3/32X 1 lb. spool)

USES:
For soldering instruments, where a “free” solder is needed and temperature requirements are critical. For soldering wiring because it has a narrow pasty range and solidifies quickly. Use this solder on electrical wiring because its core of rosin flux has a relatively low corrosive nature.

PROCEDURES:
Clean and roughen surface because solder makes a stronger joint on a rough surface than on a polished one. Joint clearances can be from 0.003 in. to a maximum of 0.010 in. An improper fit requires more solder and leaves the joint weaker. In electrical work, a closer tolerance gives better conductivity.

Melting Temperature: 361°F

Flow Temperature: 374ºF

Use flux for cleaning (NSN 3439-00-255-9935)

TYPE: **SOLDER** (tin - silver 96/4)

NSN: 9GD 3439-00-968-3370 (1/8X 5 lb. spool)

USES:
For food and beverage containers requiring a cadmium-free and lead-free solder. It retains a bright finish, is a good color match for stainless steel, and is excellent for joining dissimilar metals.. It is stronger and has better electrical conductivity than tin-lead solders and may be used for refrigeration work if tin-antimony 95/5 solder is unavailable.

PROCEDURES:
Clean and roughen surface because solder makes a stronger joint on a rough surface than on a polished one. Joint clearances can be from 0.003 in. to a maximum of 0.010 in. An improper fit requires more solder and leaves the joint weaker. Use flux NSN 9GD 3439-00-018-1655. Remove flux residue after soldering joint.

TYPE: **SOLDER** (tin - lead 60/40 rosin core)

NSN: 9GD 3439-00-184-8953 (3/32X 1 lb. spool)

USES:
For soldering instruments, where a “free” solder is needed and temperature requirements are critical. For soldering wiring because it has a narrow pasty range and solidifies quickly. Use this solder on electrical wiring because its core of rosin flux has a relatively low corrosive nature,

PROCEDURES:
Clean and roughen surface because solder makes a stronger joint on a rough surface than on a polished one. Joint clearances can be from 0.003 in. to a maximum of 0.010 in. An improper fit requires more solder and leaves the joint weaker. In electrical work, a closer tolerance gives better conductivity.

Melting Temperature: 361ºF

Flow Temperature: 374°F

Use flux for cleaning (NSN 3439-00-255-9935)

TYPE: **SOLDER** (tin - silver 96/4)

NSN: 9GD 3439-00-968-3370 (1/8X 5 lb. spool)

USES:
For food and beverage containers requiring a cadmium-free and lead-free solder. It retains a bright finish, is a good color match for stainless steel, and is excellent for joining dissimilar metals.. It is stronger and has better electrical conductivity than tin-lead solders and may be used for refrigeration work if tin-antimony 95/5 solder is unavailable.

PROCEDURES:
Clean and roughen surface because solder makes a stronger joint on a rough surface than on a polished one. Joint clearances can be from 0.003 in. to a maximum of 0.010 in. An improper fit requires more solder and leaves the joint weaker. Use flux NSN 9GD 3439-00-018-1655. Remove flux residue tier soldering joint.

CHARACTERISTICS:
This solder is lead-, antimony-, and cadmium-free and has good corrosion resistance.

Flow Temperature: 430°F

Tensile Strength: 15,000 psig

Shear Strength: 11,200 psig

Electrical Conductivity: 11.05 x 10-6 ohms/cm

NOTE: Soldering Kit, Lead-Free (NSN 9GD 3439-01 -297-3284) consists of 1 pound of corrosion resistant solder, 1/16 in.; a 2 oz. plastic bottle of white paste flux, melting point of 390°F; soft solder for stainless, copper, brass, nickel and bronze alloys; to be used with torch, solder iron or furnace applications.

TYPE: **HOLDING AND HEAT-RESISTING COMPOUND**

NSN: 9GS 3439-01 -2664557(5 lb. can)

USES:
Excellent for holding irregular shapes or parts during welding, brazing, or soldering. Protects threads and flammable materials from flame, arc heat and spatter. For easy removal after soldering wire, first cover the wiring with a sheet of asbestos or aluminum foil. If this compound is unavailable, use a high temperature insulation, fire clay, or carbon paste instead.

PROCEDURES:
Place a small amount under each section and press parts into the holding compound until properly aligned.

CHARACTERISTICS:
Can be used many times over by mixing with a small amount of water. It is easily removed from holes or threads and will not melt, bum, crack, expand, or contract to disturb alignment.

TYPE: **SURFACE-HARDENING (CASE) COMPOUND**

NSN: 9GD 6850-00-139-5936 (10 lb. can)

USES:
For rapid surface-hardening of all types of mild- and low-alloy steel. Will not increase the dimensions of the part. It can surface-harden cams, small tools, shafts, gears and collars, as well as bolt and nut threads to help prevent stripping.

PROCEDURES:
**Method No.1:** After removing all scale, etc., heat the part to a uniform bright red (1650 -1700°F). Roll, dip, or sprinkle the compound powder onto the part or section to be surface-hardened. The powder will melt and adhere to the surface. Reheat again to 1650- 1700°F and hold at this temperature for a few minutes before quenching in cold, clean water. The part will now have a case hardness of uniform depth.
**Method No. 2:** When a deeper case hardness for a part is required, place it on a can lid, or a similar tray (bum off tin before using), and cover it completely with surface-hardening compound. Heat it to a bright red color (1650°F) for 5 to 30 minutes, riding on the depth of hardness required. Remove the part with dry tongs and quench it in clean, cold water.

PENETRATION RATES:
After heating apart to 16500F using Method No. 2:

| Case Depth | Time in Minutes | Case Depth | Time in Minutes |
|---|---|---|---|
| .005 | 15 | .015 | 40 |
| .010 | 30 | .020 | 50-55 |

**Method No. 3:** Heat the part to be hardened to a dull red color (1400 - 1600ºF) before covering it with surface-hardening compound. Cover flat sections by applying compound with a knife or spatula. Round sections can be dipped or rolled in compound. Allow the part to seal, let it air for 30 seconds and then reheat it to a dull red color. Keep it at heat for one minute, then immediately quench it in water.

For deeper penetration, apply fresh compound at one minute intervals for several minutes while the part is at red heat, then immediately quench it after the last

TYPE: **SURFACE-HARDENING (CASE) COMPOUND** (Continued)

heating cycle. Hot water will easily remove any residue.

CHARACTERISTICS:
This material is free of poisonous compounds, such as cyanide, but take precautions to avoid breathing its fumes. Do not add fresh powder when it weakens; instead, simply discard and use a new can.

## APPLICATION GUIDES AND COMPARATIVE INDEX

This section includes Quick Reference Guides for Welders (Tables 1-1 through 1-5). These application guides reference pages in this manual and cover primary and alternate electrodes to be used when welding the different metals listed. This section also includes a comparative index (Table 1-6) to further aid the welder in identifying comparable welding products. Two or more products in this index maybe listed as being comparable under a National Stock Number (NSN) whereas, in reality, they differ. Remember, specifications merely state minimum requirements. Although two products meet the same specifications, they may have different performance characteristics. Table 1-6 is provided to help the deployed welder identify the right electrode, or the next best one from available welding products, and should not necessarily be construed to mean the products are the same or that they all meet the requirements for a particular National Stock Number (NSN). Space limitations required abbreviation of some product designations - For example: nickel manganese has been listed as Ni Mang.

TABLE 1-1. Cast Iron Application Guide

| Application | Primary Electrodes | | Alternate Electrodes | |
|---|---|---|---|---|
| | Arc | Torch | Arc | Torch |
| General Use | 1-20 | 1-15 | 1-17 | 1-1o |
| Heavy Castings | 1-20 | | 1-17 | 1-1o |
| Thin Castings | 1-17 | 1-15 | 1-20 | 1-1o |
| Alloy Cast Iron | 1-20 | | 1-17 | 1-1o |
| Cracks | 1-17 | 1-15 | 1-20 | 1-1o |
| Gears | 1-17 | | 1-20 | |
| Cutting, Grooving | 1-32 | | | |
| GTA | 1-17 | | 1-20 | |
| Joining to Other Metals | 1-22 | 1-1o | 1-17 | 1-12 |
| Motor Blocks | 1-17 | | 1-20 | 1-15 |

TABLE 1-1. Cast Iron Application Guide (Continued)

| Application | Primary Electrodes | | Alternate Electrodes | |
|---|---|---|---|---|
| | Arc | Torch | Arc | Torch |
| Overlay-Machinable | I-22 | 1-1o | 1-20 | 1-12 |
| Pipes | 1-20 | 1-15 | 1-17 | 1-1o |
| Pulleys | 1-17 | 1-15 | 1-20 | 1-1o |
| Valve Seats | 1-20 | 1-15 | 1-17 | |
| Malleable Iron | 1-20 | 1-1o | 1-17 | |
| Ductile Iron | 1-20 | 1-1o | 1-17 | 1-12 |

TABLE 1-2. Copper, Brass, and Bronze Application Guide

| Application | Primary Electrodes | | Alternate Electrodes | |
|---|---|---|---|---|
| | Arc | Torch | Arc | Torch |
| General Use | 1-22 | 1-16 | 1-17 | 1-12 |
| Light Gauge | | 1-13 | | |
| Very Thin Gauge | | 1-39 | | 1-37 |
| Aluminum Bronze | 1-23 | 1-25 | | |
| Bus Bar | | 1-13 | | |
| Beryllium Copper | 1-22 | 1-13 | | |
| Casting (Heavy) | 1-22 | 1-1o | | 1-12 |
| Castings (Light) | | 1-13 | | |
| Cutting, Grooving | 1-34 | | 1-35 | |
| Gears | 1-22 | 1-10 | 1-17 | 1-12 |

TABLE 1-2. Copper, Brass, and Bronze Application Guide (Continued)

| Application | Primary Electrodes | | Alternate Electrodes | |
|---|---|---|---|---|
| | Arc | Torch | Arc | Torch |
| Manganese Bronze | 1-22 | 1-10 | 1-17 | 1-12 |
| Naval Bronze | 1-22 | 1-10 | 1-17 | 1-12 |
| Overlay-Machinable | 1-22 | 1-10 | | 1-12 |
| Phosphor Bronze | 1-22 | 1-10 | 1-17 | 1-12 |
| Piping, Flanging | 1-22 | 1-13 | 1-17 | |
| Plumbing, Heating | | 1-13 | | |
| Sealing | | 1-39 | | 1-37 |
| Sheet, Brass, Bronze | | 1-13 | | 1-37 |
| Tubing | | 1-13 | | 1-37 |

TABLE 1-3. Aluminum Application Guide

| Application | Primary Electrodes | | | Alternate Electrodes | | |
|---|---|---|---|---|---|---|
| | Arc | GMA | Torch | Arc | GMA | Torch |
| General Use | 1-23 | | 1-23 | | 1-24 | |
| Brazing | | | 1-23 | | | |
| Castings | 1-23 | | | | 1-24 | |
| Castings to Sheet or plate | 1-23 | | 1-23 | | 1-24 | |
| Crankcase | 1-23 | | 1-23 | | | |
| Cutting, Grooving | 1-34 | | | | | |
| Thin Parts | | | 1-23 | | | |
| Tubing | | | 1-23 | | | |
| Landing Mats | | 1-24 | | | | |

TABLE 1-4. Stainless Steel Application Guide

| Application | Primary Electrodes | | Alternate Electrodes | |
|---|---|---|---|---|
| | Arc | Torch | Arc | Torch |
| General Use | 1-28 | 1-12 | 1-17 | |
| Brazing, Silver Alloys | | 1-13 | | |
| Piping, Flanging | 1-27 | 1-13 | 1-17 | |
| Soldering | | 1-40 | | 1-39 |
| Stainless to Monel | 1-17 | 1-13 | 1-22 | 1-12 |

TABLE 1-5. Steel Application Guide

| Application | Primary Electrodes | | | Alternate Electrodes | | |
|---|---|---|---|---|---|---|
| | Arc | GMA | Torch | Arc | GMA | Torch |
| General Use | 1-1 | 1-7 | 1-9 | 1-2 | | 1-12 |
| Alloy Steels, low | 1-3 | 1-7 | | 1-12 | 1-27 | 1-10 |
| T-1 Steels | 1-5 | | | 1-12 | 1-27 | |
| Well Casings | 1-3 | | 1-12 | 1-5 | | 1-10 |
| Pipe | 1-1 | 1-7 | 1-9 | 1-2 | | 1-12 |
| Shafts | 1-3 | | 1-12 | 1-1 | | 1-10 |
| Brazing Applications | 1-22 | | 1-12 | | | 1-10 |
| Spring Steel | 1-27 | | 1-12 | | | 1-13 |
| Carbon Steel, (High) | 1-27 | | 1-12 | | | |
| Tool Steel | 1-27 | | 1-12 | | | 1-13 |

TABLE 1-5. Steel Application Guide (Continued)

| Application | Primary Electrodes | | | Alternate Electrodes | | |
|---|---|---|---|---|---|---|
| | Arc | GMA | Torch | Arc | GMA | Torch |
| Carbon Steel (Low) | 1-1 | 1-7 | 1-9 | 1-2 | | 1-10 |
| Chrome, Moly | 1-30-C | | 1-12 | | | 1-10 |
| Cutting, Grooving | 1-34 | | | | | |
| Gears | 1-27 | | 1-12 | 1-3 | | 1-10 |
| Stainless Cladding | 1-27 | | | | | |
| Tool Tipping | | | 1-13 | | | |
| Tungsten | 1-30 (a)(b) | | | | | |
| Instrumentation | | | 1-13 | | | |
| Manganese Steel | 1-29 | | | 1-27 | | |

TABLE 1-5. Steel Application Guide (Concluded)

| Application | Primary Electrodes | | | | | |
|---|---|---|---|---|---|---|
| | Arc | GMA | Torch | Arc | GMA | Torch |
| Overlays: | | | | | | |
| Abrasion | 1-33 | | | 1-32 | | |
| Bronze | 1-22 | 1-10 | | 1-17 | | 1-12 |
| Corrosion Resistance | 1-27 | 1-12 | | 1-22 | | 1-10 |
| Machinable | 1-31 | | | 1-3 | | |
| Heat Resistance | 1-27 | | | 1-20 | | |
| Impact Resistance | 1-29 | | | 1-27 | | |

TYPE: **UNDERWATER CUTTING** (Electrode - Underwater cutting)

NSN: 9GD 3439-01-256-3361 (1/8X 14)

MIL SPEC: MILE- 17764

POSITION: All

POLARITY: AC/DC

RECOMMENDED AMPERAGE: 450

USES:
To cut ferrous or non-ferrous metals, concrete, rock, even the space shuttle's heat shield!

CHARACTERISTICS:
Readily ignited when submerged, this rod will continue to burn - **even without power** - until its oxygen supply is cut off. This advanced cutting rod works in conjunction with any cutting torch or welding machine, but reaches maximum efficiency when used with an oxy-arc cutting torch.

PROCEDURE:
Rod can be bent 900 for hard-to-reach cuts or for cutting around blind corners without restricting the oxygen flow or decreasing its cutting efficiency.

# Table 1-6. Welding Rod Comparison Chart

| Type of Weld/Cut | AWS/ASTM Class | Welding Process | Alloy Rods | Marco | Hobart | Lincoln | McKay | Tech Alloy | Unibraze | Eutectic | Page NO. |
|---|---|---|---|---|---|---|---|---|---|---|---|
| Aluminum | ER 5356 | GMA | N/A | 501.M | 5356 | N/A | N/A | N/A | N/A | N/A | 1-17 |
| | ER 4043 | SMAW1 | N/A | 500 | 4043 | Alumin/weld | N/A | N/A | N/A | N/A | 1-16 |
| | | OAW/GTA | N/A | 1570 | N/A | N/A | N/A | N/A | N/A | N/A | 1-19 |
| | ERCuAL-A2 | SMAW | N/A | 400 | N/A | N/A | N/A | N/A | N/A | N/A | 1-15 |
| | | OAW | 41FC | 1300FC | N/A | N/A | N/A | N/A | 410FC | N/A | 1-7 |
| | RBCuZn-D | OAW | 11FC | 1200 | N/A | N/A | N/A | N/A | 110FC | N/A | 1-9 |
| | | OAW | N/A | 1900 | N/A | N/A | N/A | N/A | N/A | Silver Weld Kit | 1-10 |
| Cast Iron | ENi CL-A | SMAW | Nickel Arc 99 | 301 | N/A | Softweld 99 Ni | N/A | N/A | N/A | N/A | 1-12 |
| | | SMAW | N/A | 302 | N/A | N/A | N/A | N/A | N/A | N/A | 1-13 |
| | EFiFE-Cl | SMAW | N/A | 300/303 | Cast-Tex 55 | Softweld 55 | N/A | Tech-Rod 55 | Harris 55 | Xyron-23 | 1-14 |
| | RCI | OAW | N/A | 1301/327 | N/A | N/A | N/A | N/A | N/A | | 1-11 |
| Steel | | OAW | N/A | 1300FC | N/A | N/A | N/A | MMSO.062 | N/A | N/A | 1-7 |
| | E–6012 | SMAW | SW612 | 202 | 12 | FW-7 | N/A | RACO6012 | N/A | N/A | 1-2 |
| | E-6011 | SMAW | SW14 | 203/211 | 335A/335C | FW-35 | 6011 | RACO6011 | N/A | N/A | 1-1 |
| | E-701B | SMAW | Atom Arc 7018 | 201 | 718/718MC | Jet Weld LH-707 | 018-M | RACO7018 | N/A | CEC9708 | 1-3 |
| | E11018 | SMAW | Atom Arc | 210 | Haballoy 11018-M | Jetweld LH110 | MR 11018-M | RACO 11018-M | N/A | N/A | 1-4 |
| | E70, S-3, S-6 | SMAW | Spool-Arc 85 | 201M | HB-25, HB-33 | L-50 | S-3 | RACO-121 | N/A | | 1-5 |
| | E312-16 | SMAW | ARCALDY 312AC | DC 200 | SOUDOCR-OM312-16 | N/A | 312AC-DC | RACO 312-16 | Harris 312-16 | EUTEC 3026 | 1-20 |
| Cutting, Chamfer/ Gouging Arc | | SMAW | DH-4 | 800 | W/A | N/A | N/A | N/A | Grovrod | Chamfer Trade | 1-27 |
| Build-up | 1-A-2b | SMAW | 31P | W/A | Tufanhard 250 | BU-90 | Hardalloy 32 | N/A | Matrix | Ferro-Rod 2B | 1-24 |
| Wearfacing Buildup | EFeMn-B | SNAW | Super–WH | 701 | 160 | N/A | Chrome Mang | N/A | HS-44 | 3205 | 1-22 |
| | | SMAW | 51P | 702 | 375/400 | 600 Abrasoweld | Hardalloy 58 | N/A | N/A | Steel tectic | 21-25 |
| | | SMAW | 40 | 700 | 580 | Faceweld | Hardalloy 55 | W/A | U/A | 5505 6606 | 1-26 |

# Section 2. WEARFACING

## INTRODUCTION

Abrasion-resistant alloys have poor impact properties. Conversely, impact-resistant alloys have poor abrasion resist ante. The higher an alloy's abrasion resistance, the lower its ability to withstand impact, and vice-versa. Between these two extremes are numerous wearfacing alloys that combine varying degrees of resistance to abrasion with the ability to absorb a fair amount of impact. The selection of a wearfacing alloy for a certain application is determined by the requirements of its anticipated service.

The Seabee Welder can greatly extend the usable life of construction equipment by selecting the appropriate alloy and applying it with the correct procedure. A regular wearfacing program extends equipment life, allows it to operate more efficiently, with less down time, and greatly reduces the need for spare parts.

The following section illustrates various parts of construction equipment and describes the correct repair welding procedures to use on them. Each diagram provides one or more electrodes that maybe used as alternates whenever the most desirable rod is not available. The numeral given is the page number where information on the recommended rod can be found.

## WORKPIECE PREPARATION

Remove dirt, oil, rust, grease and other contaminants before welding. If you do not, you are inviting porosity and possible spalling. Prepare a sound foundation by removing fatigued, rolled-over metal. Repair cracks with compatible electrodes.

## PREHEAT

Preheating of base metal is sometimes necessary to minimize distortion, to prevent spalling or cracking or to avoid thermal shock. Preheat temperature is influenced by two important factors; the carbon content and alloy content of the base metal. The higher the carbon content, the higher the required preheat temperature. The same is true, to a slightly lesser degree, for the total content of other alloys. After the surface has been brought to the required

**PREHEAT** (Continued)

preheat temperature, the part must be held at this temperature until heat has reached the core; this is commonly referred to as soaking time. All preheated parts should be slow-cooled.

The need for preheating increases as the following factors are changed:

1. The larger the mass being welded.
2. The lower the temperature of the pieces being welded.
3. The lower the atmospheric temperature.
4. The smaller the weld rod diameter.
5. The greater the speed of welding.
6. The higher the carbon content of the steel.
7. The higher the manganese content in plain carbon or low alloy steels. This does not apply to Hadfield's manganese steel.
8. The greater the alloy content in air-hardening steels.
9. The more the air-hardening capacity of the steel.
10. The more complicated the shape or section of the parts.

Base metal composition must be determined for accurate Preheat requirements. Carbon steels and austenitic manganese steels can be differentiated with the use of a magnet. Carbon steels are magnetic; austenitic manganese steels are not. (Austenitic manganese steel will become magnetic after being workhardened so a magnetic check should be made in a non-worked area. ) Cast iron can be determined by a spark when a metal-working chisel is applied to the base metal; cast iron will chip or crack off; cast steel will shave.

**PREHEAT** (Continued)

Table 2-1 shows recommended preheat temperatures for welding. Temperatures higher than those indicated on this chart are sometimes required when hard-facing, depending on the size and shape of the part and the type of hard-facing alloy to be applied.

## WELDING ON CAST IRON

Rebuilding and hard-facing of cast iron is not generally recommended since it is extremely crack sensitive. However, some cast iron parts, primarily those subject to straight abrasion, are being successfully hard-faced. Under any circumstances, cast iron parts require high preheat temperatures, from 1000- 1200°F (dull red), and must be slow cooled after welding. Weld deposits on cast iron should be peened to help relieve stresses.

## BUILDUP MATERIALS AND BASE METALS

Considerable differences exist between welding materials used to buildup worn equipment and those used for hard-facing overlays.

Prior to hard-facing, badly worn parts must be restored with an appropriate buildup material to within 2/16 - 3/8 in. of their finished size. The buildup material must have sufficient mechanical strength to sustain structural requirements. It must resist cold flowing, mushing under high compressive loads and plastic deformation under heavy impact. If the buildup material doesn't possess these properties, a hard-facing overlay, which has comparatively little ductility, will span for lack of support. In addition to these mechanical requirements, a buildup material must be compatible with the base metal and the hard-facing overlay.

Use electrode on page 1-24 as the primary source and electrodes on pages 1-5 and 1-3, in that order, as alternate sources to rebuild carbon steel parts prior to overlaying with hard-facing electrodes. When hard-facing with the high alloy group, apply the recommended hard-facing material before placing it in service and do not allow it to wear more than 1/4 in. (two layers) before hard-facing. If carbon steel parts

## BUILDUP MATERIALS AND BASE METALS (Continued)

that are to be hard-faced with the high alloy group require buildup, it is vital that high interpass temperatures are maintained while observing the following procedures as illustrated in Figure 2-1. Use weaving bead instead of stringer bead when applying hard-facing. Limit single pass bead thickness to 3/16 inch. Use same technique for second layer. Avoid severe quench.

To rebuild austenitic manganese steel parts, use the electrode on page 1-29 as the primary source and the electrode on page 1-27 as the secondary source.

## WORKPIECE POSITIONING

You will get the job done quicker and more economically if the part being hard-faced is positioned for downhand welding. When down-hand welding is not practical, select an electrode recommended for all-position welding.

## THICKNESS OF HARD-FACING DEPOSITS

A deposit of a hard-facing alloy that is too thick can give you more problems than no deposit at all. In most cases, hard-facing materials should be limited to two layers; the first layer will produce an admixture with the base metal and the second layer will produce the desired wear-resistant surface.

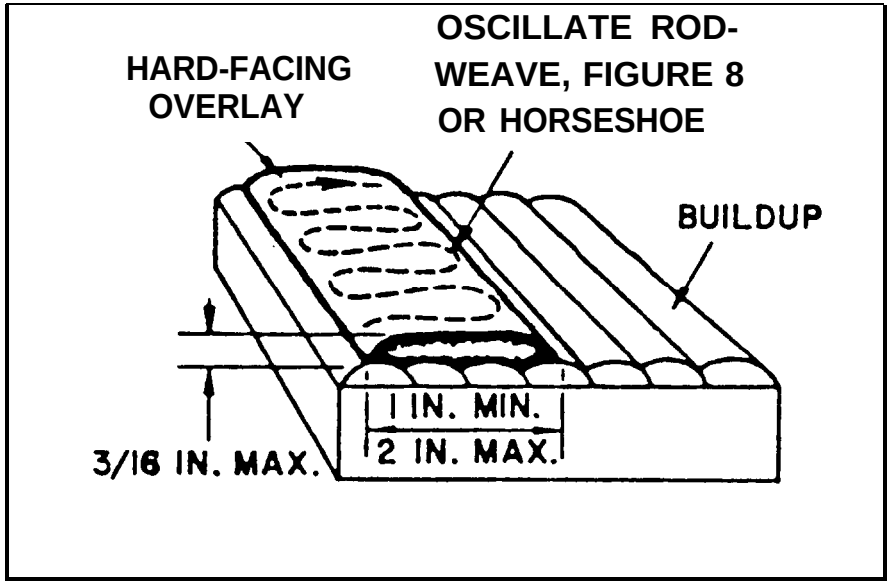


FIGURE 2-1. Hard-Facing Techniques

**TABLE 2-1. Metals Preheating Chart**

| Metal Group | Metal Designation | Recommended Preheat |
|---|---|---|
| PLAIN CARBON STEELS | Plain Carbon Steel - Below .20%C | Up to 200°F |
| | Plain Carbon Steel - .20-.30%C | 200°F-300°F |
| | Plain Carbon Steel - .30-.45%C | 300°F-500°F |
| | Plain Carbon Steel - .45-.80%C | 500°F-800°F |
| CARBON MOLY STEELS | Carbon Moly Steel -.10-.20%C | 300°F-500°F |
| | Carbon Moly Steel -.20-.30%C | 400°F-600°F |
| | Carbon Moly Steel -.30 -.35%C | 500°F-800°F |
| MANGANESE STEELS | Silicon Structural Steel | 300°F-500°F |
| | Medium Manganese Steel | 300°F-500°F |
| | SAE T 1330 Steel | |
| | SAE T 1340 Steel | 500°F-800°F |
| | SAE T 1350 Steel | 600°F-900°F |
| | 12% Manganese Steel | Usually not required |

**TABLE 2-1. Metals Preheating Chart (Continued)**

| Metal Group | Metal Designation | Recommended Preheat |
|---|---|---|
| HIGH TENSILE STEELS | Manganese Moly Steel | 300°F-500°F |
| | Jalten Steel | 400°F-600°F |
| | Manten Steel | 400°F-600°F |
| | Armco High Tensile Steel | Up to 200°F |
| | Double Strength #1 Steel | 300°F-600°F |
| | Double Strength #1 Steel | 400°F-700°F |
| | Mayari R Steel | Up to 300°F |
| | Otiscoloy Steel | 200°F-400°F |
| | Nax High Tensile Steel | Up to 300°F |
| | Cromansil Steel | 300°F-400°F |
| | A. W. Dyn-El Steel | Up to 300°F |
| | Corten Steel | 200°F-400°F |
| | Chrome Copper Nickel Steel | 200°F-400°F |
| | Chrome Manganese Steel | 400°F-600°F |
| | Yoloy Steel | 200°F-600°F |
| | Hi-Steel | 200°F-500°F |

**TABLE 2-1. Metals Preheating Chart (Continued)**

| Metal Group | Metal Designation | Recommended Preheat |
|---|---|---|
| NICKEL STEELS | SAE 2015 Steel | Up to 300°F |
| | SAE2115 Steel | 200°F-300°F |
| | 2-1/2% Nickel Steel | 200°F-400°F |
| | SAE2315 Steel | 200°F-500°F |
| | SAE 2320 Steel | 200°F-500°F |
| | SAE 2330 Steel | 300°F-600°F |
| | SAE 2340 Steel | 400°F-700°F |
| MEDIUM NICKEL CHROMIUM STEELS | SAE3115 Steel | 200°F-400°F |
| | SAE 3125 Steel | 300°F-500°F |
| | SAE 3130 Steel | 400°F-700°F |
| | SAE 3140 Steel | 500°F-800°F |
| | SAE 3150 Steel | 600°F-900°F |
| | SAE 3215 Steel | 300°F-500°F |
| | SAE 3230 Steel | 500°F-700°F |
| | SAE 3240 Steel | 700°F-l00°F |
| | SAE 3250 Steel | 900°F-1100°F |
| | SAE 3315 Steel | 500°F-700°F |

**TABLE 2-1. Metals Preheating Chart (Continued)**

| Metal Group | Metal Designation | Recommended Preheat |
|---|---|---|
| MEDIUM NICKEL CHROMIUM STEELS | SAE 3325 Steel | 900°F-1100°F |
| | SAE 3435 Steel | 900°F-1100°F |
| | SAE 3450 Steel | 900°F-1100°F |
| MOLY BEARING CHROMIUM and CHROMIUM NICKEL STEELS | SAE 4140 Steel | 600°F-800°F |
| | SAE 4340 Steel | 700°F-900°F |
| | SAE 4615 Steel | 400°F-600°F |
| | SAE 4630 Steel | 500°F-700°F |
| | SAE 4640 Steel | 600°F-800°F |
| | SAE 4820 Steel | 600°F-800°F |
| LOW CHROME (Cr) MOLY (Me) STEELS | 2% Cr. - 1/2% Mo. Steel | 400°F-600°F |
| | 2% Cr. - l/29% Mo. Steel | 500°F-800°F |
| | 2% Cr. - 1% Mo. Steel | 500°F-700°F |
| | 2% Cr. -1% Mo. Steel | 600°F-800°F |

**TABLE 2-1. Metals Preheating Chart (Continued)**

| Metal Group | Metal Designation | Recommended Preheat |
|---|---|---|
| MEDIUM CHROME (Cr) MOLY (Me) STEELS | 5% Cr. - 1/2% Mo. Steel<br>5% Cr. - 1/2% Mo. Steel<br>8% Cr. - 1% Mo. Steel | 500°F-800°F<br>600°F-900°F<br>600°F-900°F |
| PLAIN HIGH CHROMIUM (Cr) STEELS | 12-14% Cr. Type 410<br>16-18% Cr. Type 430<br>23-30% Cr. Type 446 | 300°F-500°F<br>300°F-500°F<br>300°F-500°F |
| HIGH CHROME (Cr) NICKEL (Ni) COLUMBIUM (Cb) STAINLESS STEEL | 18% Cr. - 8% Ni. Type 304<br>25-12 Type 309<br>25-20 Type 310<br>18-8 Cb. Type 347<br>18-8 Mo. Type 316<br>18-8 Mo. Type 317 | Usually does not require preheating but it maybe desirable to remove chill. |

## TYPES OF WEAR

### Abrasion

A grinding action caused by abrasive solids sliding, rolling or rubbing against a surface. Referred to as gouging when combined with high compressive loads,

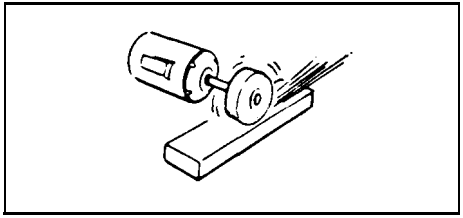

### Impact

A blow or series of blows to a surface, resulting in fracture or gradual deterioration,

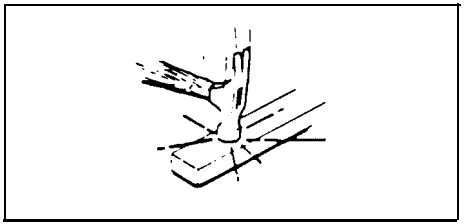

### Heat

Softens metallic structures and may accelerate chemical attacks like oxidation and scaling; however, it may cause phase changes that increase hardness and brittleness.

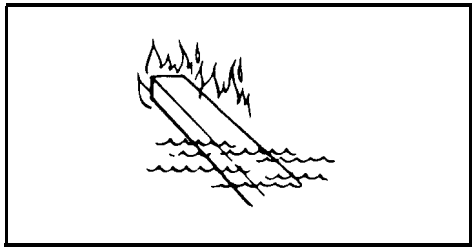

**Corrosion**

Deterioration of metal by chemical or electrochemical reaction with its environment.

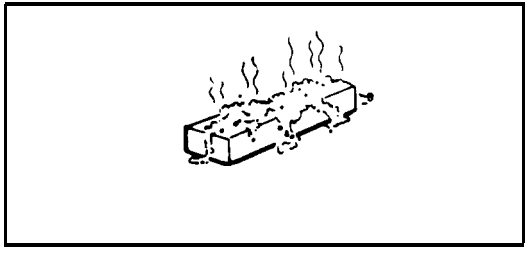

## RECOMMENDED AMPERAGE AND POLARITY

Weld data showing recommended amperage and polarities is listed in Section 1 on each page for every electrode.

## THE DIFFERENCE BETWEEN CROSS-CHECKING AND CRACKING

Deposits made with high allov electrodes should check on the surface. The check pattern is highly desirable as it reduces residual stresses. Without checking, the residual (or locked-in) stresses when combined with service stresses can reach a magnitude greater than the tensile strength and result in deep cracks or spalling (Figure 2-2). If checking does not occur naturally, it must be induced to avoid future failure. For example, as heat builds up in large parts, less cross checking will take place. To rectify this, forced checking can be accomplished by sponging the deposit with a wet cloth or by spraying the surface with a fine water mist. Checking may also be accelerated during the cooling period by occasionally striking the deposit with a hammer. If a check-free deposit is necessary, use a softer alloy and observe preheat and postheat requirements.

## OXY-MAPP HARD-FACJNG

General Rules

1. Use the oxy-MAPP method for hard-facing thin cutting edges; electric arc welding is more apt to bum through. oxy-MAPP is also preferred where minimum dilution is required.

2. Most small parts made of low-, medium-or relatively high-carbon steel can be hard-faced by the oxy-MAPP process. The hard-facing of cast iron is not recommended.

3. Use a tip approximately four sizes larger than that ordinarily used to deposit a mild steel rod of the same diameter.

4. Where possible, use a jig to quickly position the part for downhand welding, especially when the part must be turned two or more times. This will save time and gas.

5. Lineup smaller parts like ditcher teeth or coal cutter bits in a row for easy pm-heating during welding.

6. Clean all areas to be hard-faced with a grinding wheel regardless of whether the part is new or used. Grinding helps eliminate pin holes and makes it easier to apply the hard metal. The ground surface should always extend beyond the hard metal deposit. In other words, if the hard metal deposit is to be 1 in. wide, the ground area should be 1-1/2 in. wide.

7. When you hard-face any type of an edged tool you increase its thickness. It is therefore desirable to draw out or sharpen all types of edged implements, new or used, before the hard metal is deposited.

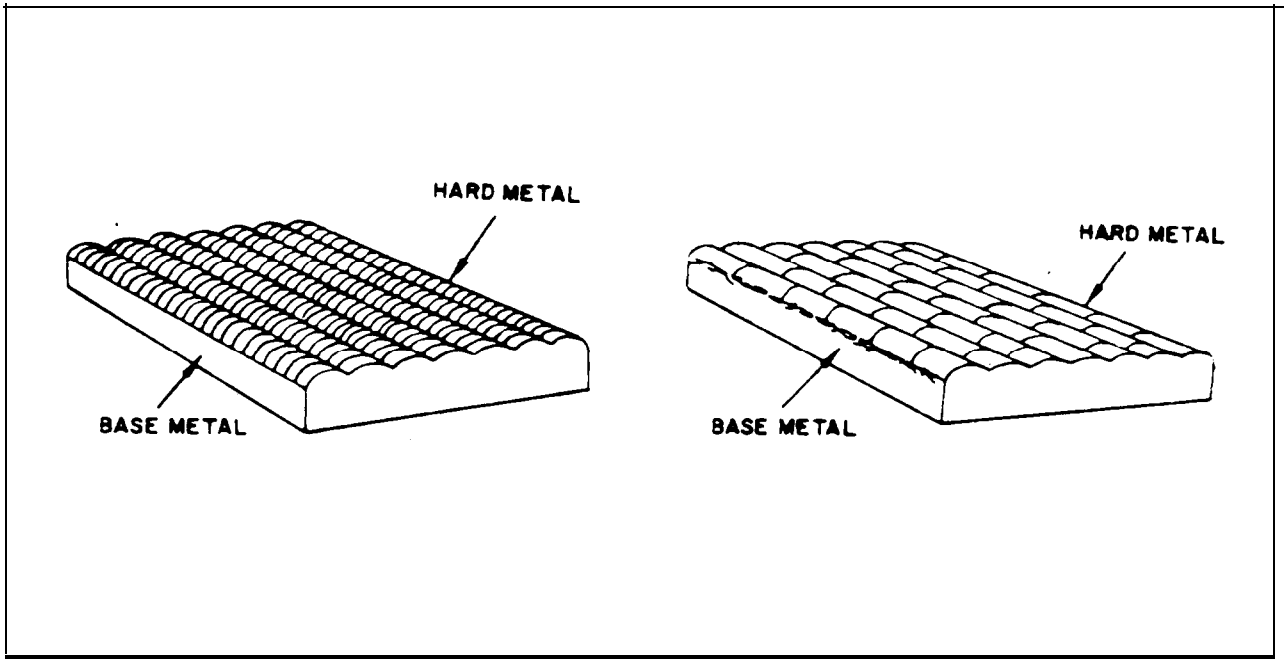


**FIGURE 2-2. Cross-Checking and Cracking Comparison**

## FLAME ADJUSTMENTS

Three basic flame adjustments are used to deposit hard-facing rods.

The excess MAPP flames (3X and 4X as shown in Figure 2-3) are used to:

(1) Spread the heat to minimize possible burn-through on thin edges;

(2) add excess carbon to the skin of the part being hard-faced.

The additional carbon lowers the melting point and sweating temperature of the part, facilitating the deposit of the hard-facing alloy.

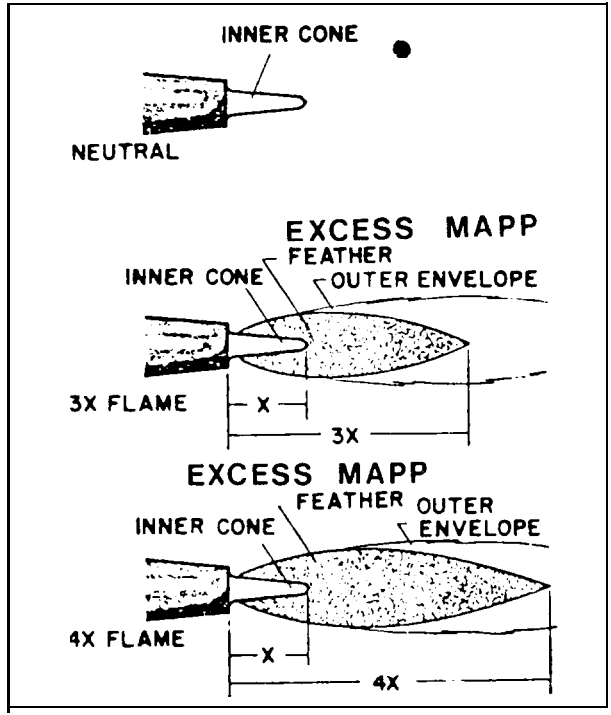


**FIGURE 2-3. Flame Adjustments for Hard-Facing.**

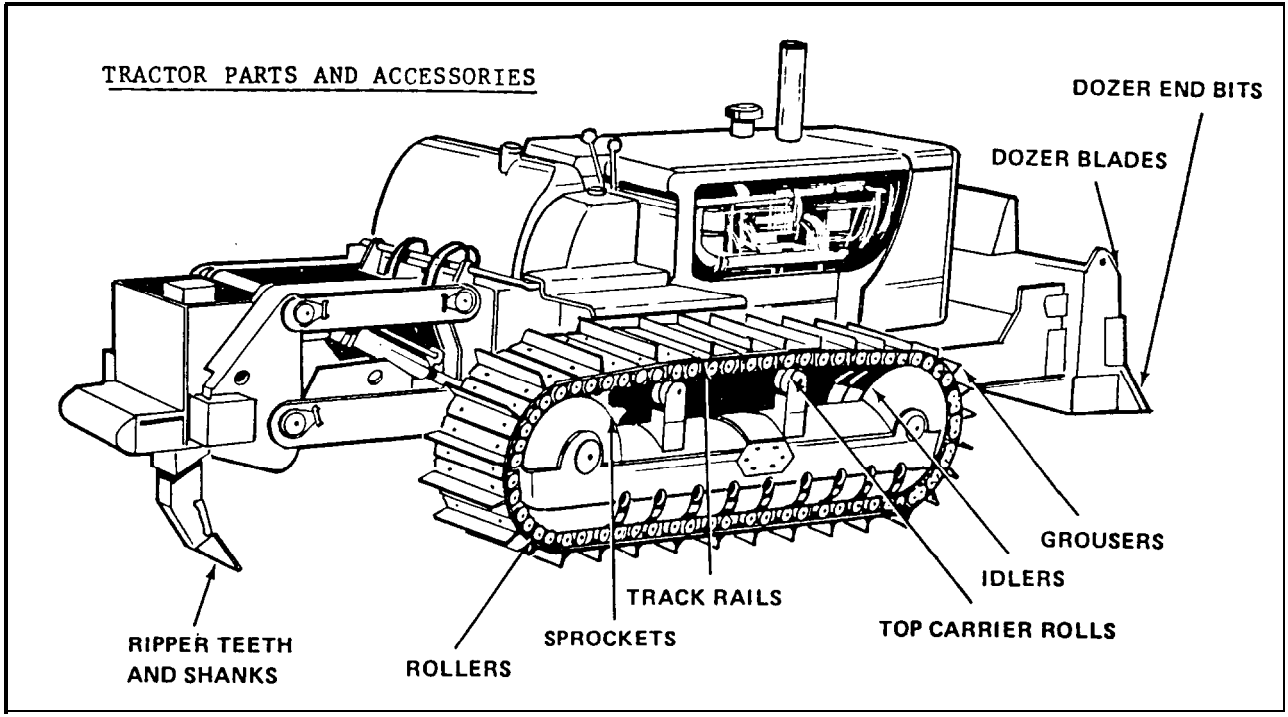


**FIGURE 24. Tractor Parts and Accessories**

**TRACTOR PARTS AND ACCESSORIES** (See Figure 2-4)

(NOTE: TO PREVENT DAMAGE FROM ELECTRICAL ARC. REMOVE BEARINGS BEFORE WELDING)

Track Rollers

Primary Electrode: Page 1-24
Alternate Electrodes: Pages 1-5, 1-3

Welding Procedures: Mount roller on jig for downhand welding. Apply transverse beads on running face and flange (Figure 2-5).

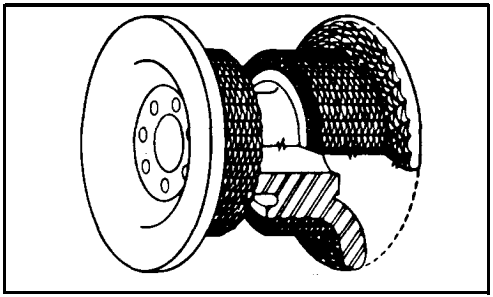

**FIGURE 2-5. Hard-Facing Track Rollers**

Tractor Idlers

Primary Electrode: Page 1-31
Alternate Electrodes: Pages 1-5, 1-3

Welding Procedures: Mount idler in jig for downhand welding. Beads are often applied transversely (Figure 2-6).

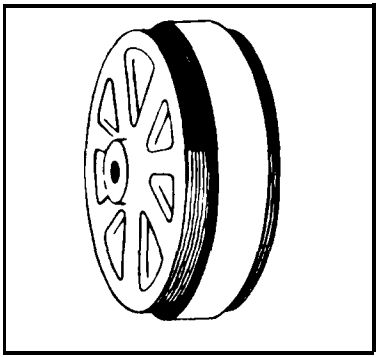

**FIGURE 2-6. Hard Facing Tractor Idlers**

**TRACTOR PARTS AND ACCESSORIES**
(Continued)

Tractor Rails

Carbon Steel

Primary Electrode: Page 1-24

Alternate Electrodes: Pages 1-5, 1-3

Welding Procedures: Do not rebuild rails until they have worn to recommended service limits. Buildup outside edges to same level as center. Apply wash passes 1/2 in. wide until entire surface is covered. Work alternately on four links to avoid overheating. Use only buildup materials; do not hardface (Figure 2-7).

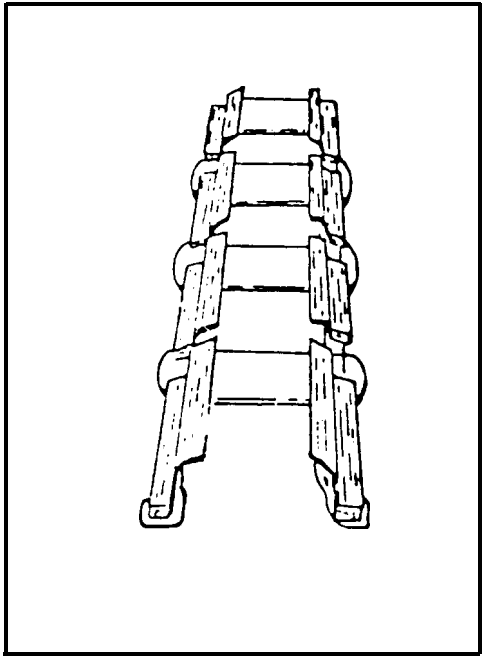

**FIGURE 2-7. Rebuilding Tractor Rails**

**TRACTOR PARTS AND ACCESSORIES**
(Continued)

Top Carrier Rolls

Cast Iron

Primary Electrode: Page 1-14

Carbon Steel:

Primary Electrode: Page 1-24

Alternate Electrodes: Pages 1-5, 1-3

Welding Procedures: Cast Iron - Mount roller on jig for downhand welding after bushings have been pressed out and surfaces cleaned. Preheat part to 1000 - 1200°F. Play burner flame on roll during entire welding operation. Apply two layers of electrode on page 1-14 in wide transverse beads; weld alternately on opposite ends of roll. Slow cool in asbestos or lime box.

(NOTE: DO NOT USE BUILDUP ELECTRODE ON CAST IRON)

Carbon Steel - Follow same procedure with recommended alloys, but preheat is not necessary (Figure 2-8).

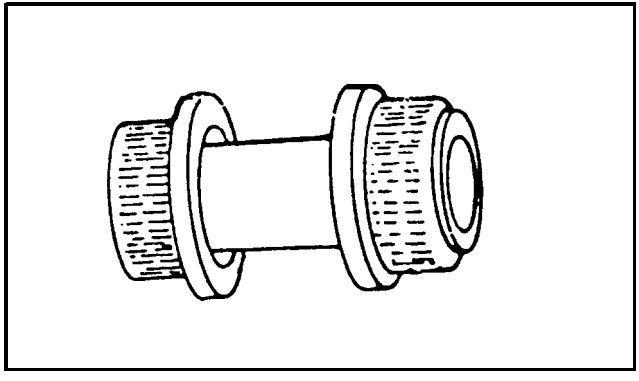

**FIGURE 2-8. Hard-Facing Top Carrier Rolls**

**TRACTOR PARTS AND ACCESSORIES**
(Continued)

Drive Sprockets

Carbon Steel

Primary Electrode: Page 1-24

Alternate Electrodes: Pages 1-5, 1-3

Welding Procedures: Position sprocket for downhand welding. Use buildup material on badly worn areas (Figure 2-9). Use template to obtain proper shape. Grind high spots.

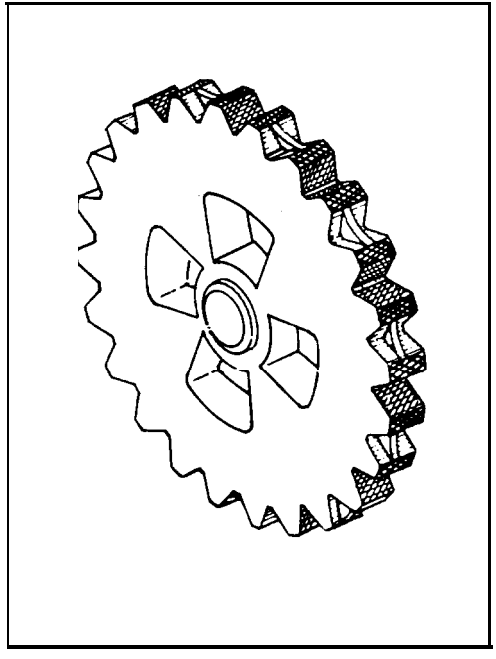

**FIGURE 2-9. Hard-Facing Drive Sprockets**

**TRACTOR PARTS AND ACCESSORIES**
(Continued)

Tractor Grousers

Carbon Steel

Primary Electrode: Page l-25

Alternate Electrodes: Pages l-22,1-20

Welding Procedures: Anneal induction-hardened grousers before welding bar stock on grousers (Do not hardface new grousers). Rebuild cleat to original height by welding steel reinforcing bar stock to pad with appropriate electrode on page 1-3. Mark grouser lengths for three equal parts (Figure 2-10). Face outer thirds by beginning passes from center and working out. Entire length of grouser can be faced if desired, but method shown avoids stress buildup.

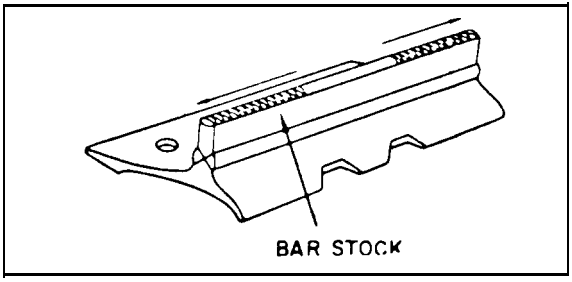


**FIGURE 2-10. Hard-Facing Tractor Grousers**

Ripper Teeth

Carbon Steel

Primary Electrode: Page 1-26

Alternate Electrodes: Pages 1-25, 1-22

**Ripper** Teeth (Continued)

Welding Procedures: Apply to top and sides of tooth covering area about 2 in. back from point. Hard-face remainder of tooth as shown in Figure 2-11.

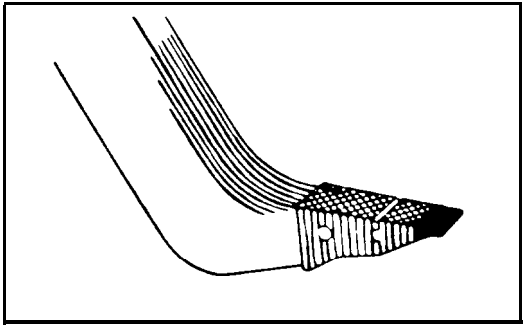

**FIGURE 2-11. Hard-Facing Ripper Teeth**

Bulldozer End Bits

Carbon Steel

Primary Electrode: Page 1-25

Alternate Electrodes: Pages 1-22, 1-20

Welding Procedures: Place end bit in flat position and apply beads across outer comer and along edges. On worn end bits, weld new corner and hard-face (Figure 2-12). If work involves impact, use above mentioned electrodes; in case of severe abrasion and moderate impact, use electrode on page 1-26.

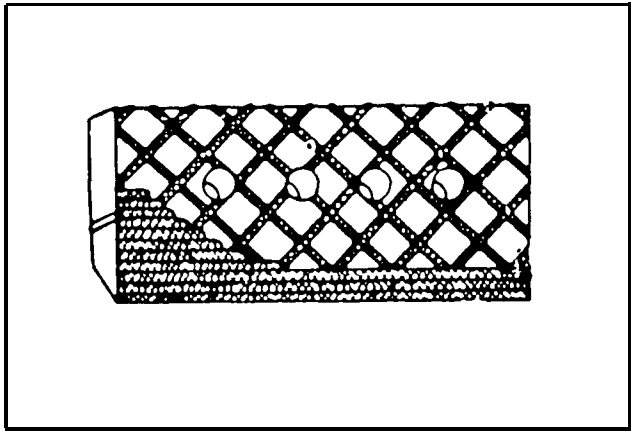

FIGURE 2-12. Hard-Facing Bulldozer End Bits

Bulldozer Blades

Carbon Steel

Primary Electrode: Page 1-25

Alternate Electrodes: Pages 1-22, 1-20

Welding Procedures: Position blade in suitable prehending jig or where necessary, bolt blade to moldboard. Use skip weld technique. Apply stringer beads to make deposit 1-1/2 in. wide (Figure 2-13). If work involves impact, use electrode on page 1-25; in case of severe abrasion and moderate impact, use electrode on page 1-26 which provides maximum service life. NOTE: HIGH CARBON BLADES MUST BE PREHEATED BEFORE HARD FACING.

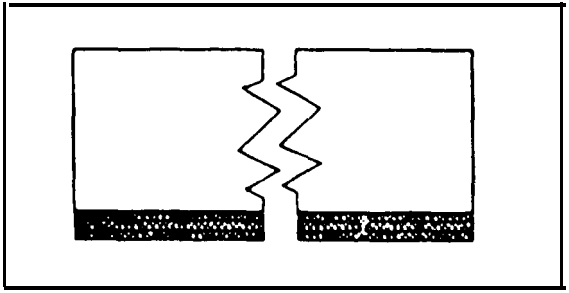

**FIGURE 2-13. Hard-Facing Bulldozer Blades**

Riper Shanks

Carbon Steel

Primary Electrode: Page 1-26

Alternate Electrodes: Pages 1-25, 1-22

Welding Procedures: Some ripper shanks are made of difficult-to-weld steels but can be protected without ever striking an arc on the base metal by fabricating a sleeve that fits tightly around the shank. Cut side and back panels from 1/2 in. mild steel plate; use 1 in. plow steel for front panel. Join front and side panels with mild steel electrodes and slip unit around shank (Figure 2-14). Weld back panel in place. For manual welding, apply above-mentioned electrodes in waffle pattern on front panel and on side panels. Shanks made of weldable steels can be protected by applying same patterns directly on base metal.

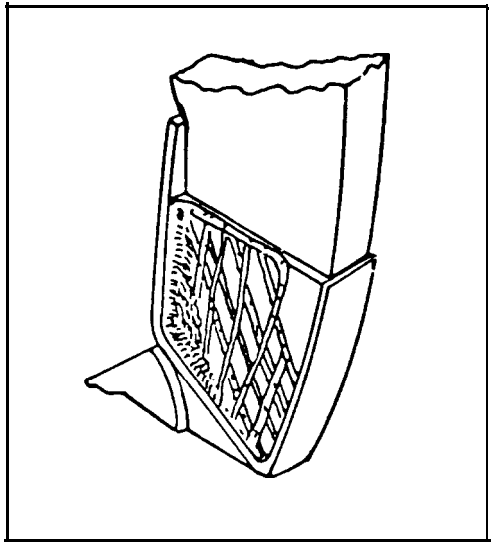

**FIGURE 2-14. Hard-Facing Ripper Shanks**

Rock Rake

Carbon Steel

Primary Electrode: Page 1-26

Alternate Electrodes: Pages 1-22, 1-20

Welding Procedures: Hard-face rock rake teeth when new for best service life. Deposit electrode in slight weave beads running parallel to flow of rock; overlay top and sides of each tooth with heavy wash pass about 2 in. from tip. Do not allow teeth to wear more than 1/4 in. before rehard-facing (Figure 2-15).

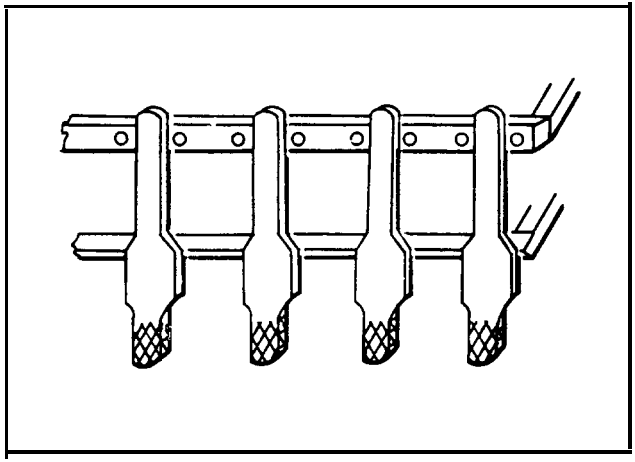

**FIGURE 2-15. Hard-Facing Rock Rake Teeth**

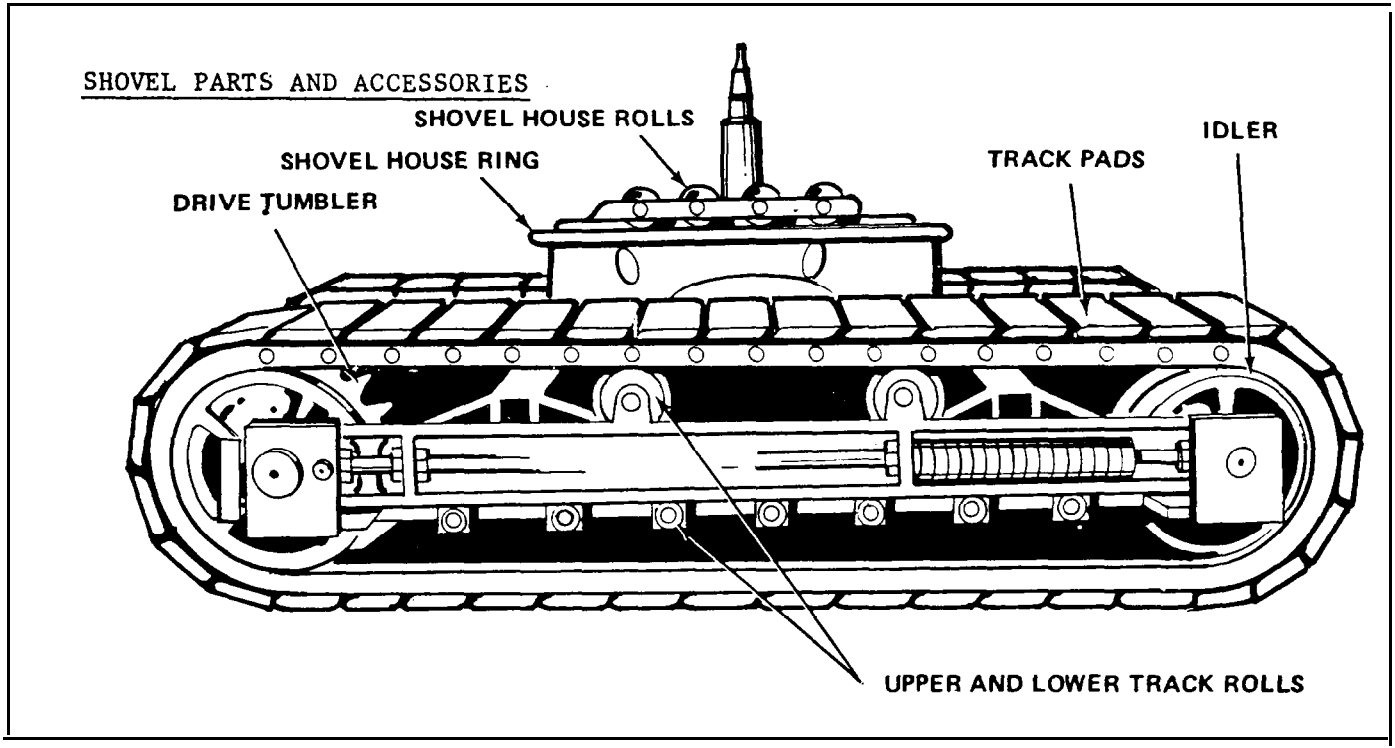


**FIGURE 2-16. Shovel Parts and Accessories**

**Shovel Rollers**

**Carbon Steel**

**Primary Electrode: Page l-24**

**Alternate Electrodes: Pages l-5,1-3**

**Welding Procedures:** Construct jig so roller can be turned for downhand welding. Rebuild with buildup **material to original** size (Figure 2-17).

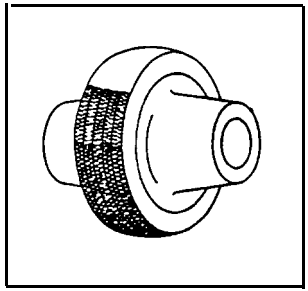

**FIGURE 2-17. Hard-Facing Shovel Rollers**

Shovel Track Pads

Carbon Steel

Primary Electrode: Page 1-24

Alternate Electrodes: Pages 1-5, 1-3

Manganese Steel

Primary Electrode: Page 1-22

Alternate Electrodes: Page 1-25

Welding Procedures: Start application on lugs. With manual process, rebuild worn areas to original size with recommended buildup material (Figure 2-18).

**SHOVEL PARTS AND ACCESSORIES**
(Continued)

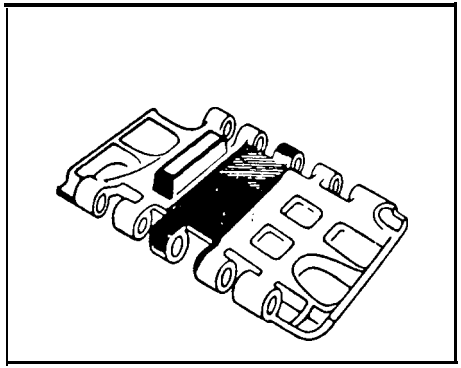

**FIGURE 2-18. Hard-Facing Shovel Track Pads**

Shovel Idlers

Carbon Steel

Primary Electrode: Page l-24

Alternate Electrodes: Pages l-5,1-3

Welding Procedures: Construct jig so idler can be turned for downhand welding.

Rebuild with buildup material to original size (Figure 2-19).

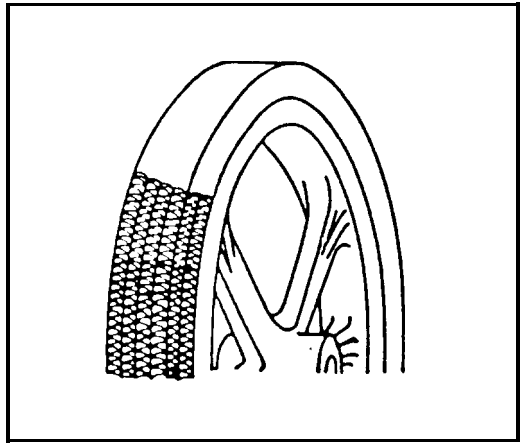

**FIGURE 2-19. Hard-Facing Shovel Idlers**

**SHOVEL PARTS AND ACCESSORIES**
(Continued)

Shovel Drive Tumblers

Carbon Steel

Primary Electrode: Page l-24

Alternate Electrodes: Pages l-5,1-3

Manganese Steel

Primary Electrode: Page l-22

Alternate Electrodes: Page l-20

Welding Procedures: Construct jig so tumbler can be turned for downhand welding. Rebuild with buildup material to original size. Use template to obtain proper size (Figure 2-20).

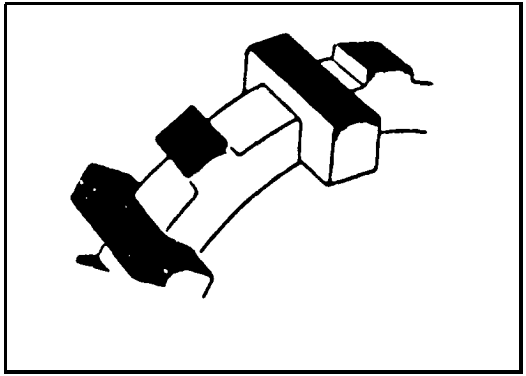

**FIGURE 2-20. Hard-Facing Shovel Drive Tumblers**

Shovel House Rolls

Carbon Steel

Primary Electrode: Page 1-24

Alternate Electrodes: Pages 1-5, 1-3

**SHOVEL PARTS AND ACCESSORIES**
(Continued)

Welding Procedures: House rolls are generally made of high carbon steel and should be preheated to at least 500°F. Mount roll on jig for downhand welding. Rebuild worn rolls with recommended buildup material in transverse beads across face. Machine or grind to proper size (Figure 2-21).

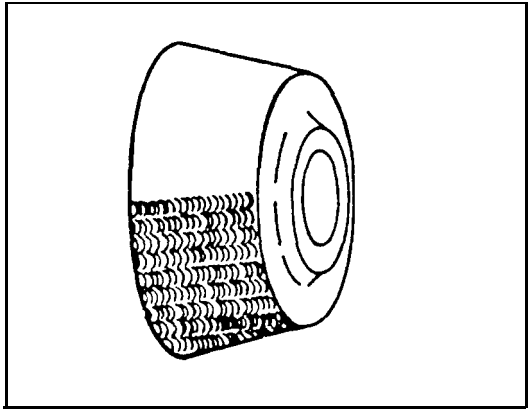

**FIGURE 2-21. Hard-Facing Shovel House Rolls**

Shovel and Dragline Buckets

Selection of one weld pattern over another when hard-facing shovel and dragline buckets is important. One hard-facing alloy will not work satisfactorily under all wear conditions. Likewise, one hard-facing pattern will not perform the same under all wear conditions.

A bucket working in sand with hard-facing beads applied at right angles to the flow of material will have a longer service life than one with beads applied parallel to the flow.

A waffle pattern of beads gives even better protection to a bucket because the pattern forms small pockets where damp dirt becomes packed. This results in abrasive soil working against more soil. Both the hard-facing and the base metal are thus protected.

A bucket working in dry, large-sized slag with hard-facing beads applied at right angles to the flow of material will be subjected to high abrasive wear. Beads applied in the same direction of flow will, in this case, allow slag to ride on top of the hard metal beads

without imposing wear on the base metal between the beads.

Another effective hard-facing pattern is the use of small dots of hard metal alloy spaced close together. This method produces an effective hard-facing pattern, while reducing the heat input from the welding operation. Chance of overheating high grade steel used in some buckets is practically eliminated.

The dots arc first applied on wide centers, the welder gradually fills in the spaces until the area to be hard-faced is covered with closely spaced dots of hard metal (Figure 2-22).

Successful hard-facing patterns are found by trial and error. What works in one instance may not in another. Knowing the type of wear encountered, how it is imposed, and the proper alloy to use, will help to apply the most effective bead pattern. Check the service life received and the wear pattern developed. Next time hard-facing is applied, alter the pattern as required and check results against previous application.

Recommended Alloys:

For relatively moderate wear, use electrodes on page 1-25 as a primary choice, and electrodes on page 1-22, or 1-27 as alternate choices. For extreme abrasion, use electrodes on page 1-26 as a primary choice and electrodes on pages 1-27 or 1-22 as alternate choices. Skip weld on manganese buckets to avoid overheating. Where possible, position for downhand welding.

Wear Plates:

Use stainless steel electrodes on page 1-20 to weld wear plates to worn buckets. For best service life, hard-face wear plates as described above.

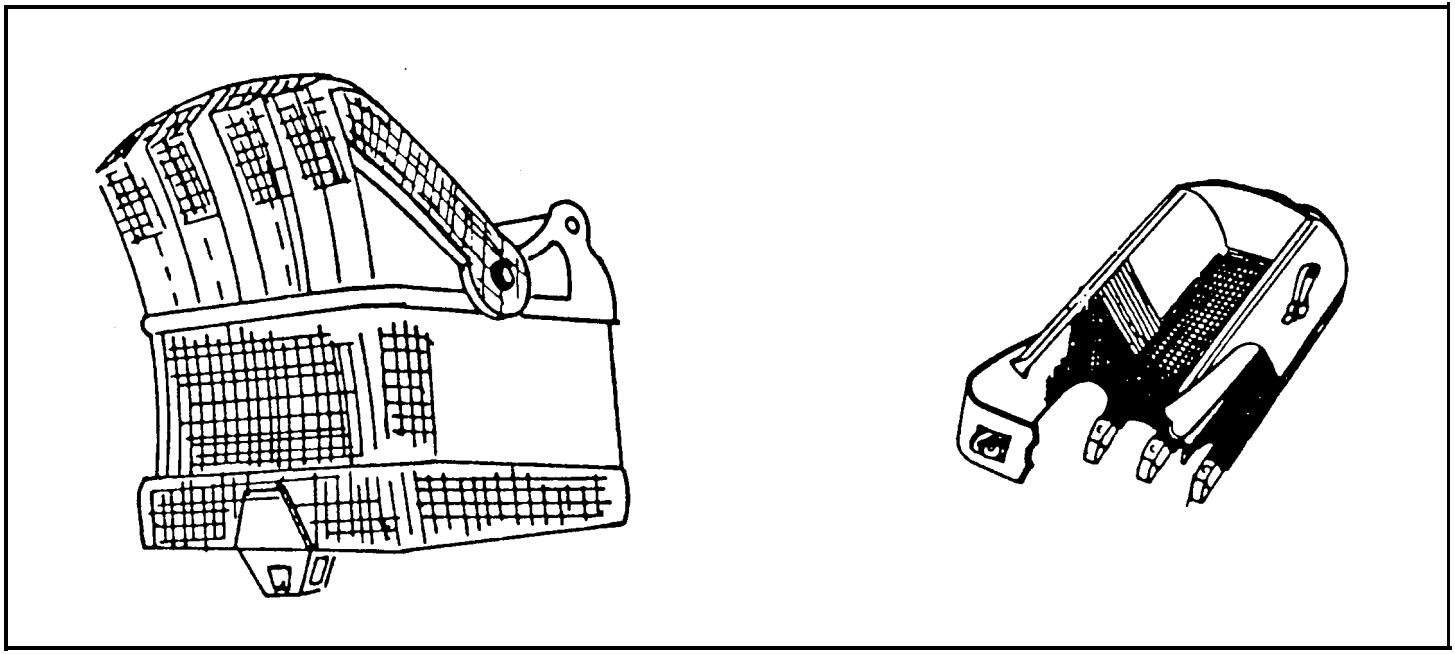

**FIGURE 2-22. Hard-Facing Shovel and Dragline Buckets**

**SHOVEL PARTS AND ACCESSORIES**
(Continued)

Shovel Teeth

Hard-face shovel teeth when they are new, before putting them in service. The weld bead pattern used on shovel teeth can have a marked effect on service life. Teeth working primarily in rock should be hard-faced with beads running the length of the tooth to allow the rock to ride on the hard metal beads. When working in dirt, clay or sand, run the beads across the flow of material (Figure 2-23) so it will fill cavities between the weld beads and give the base metal added protection. Another effective pattern is the waffle or cross hatch (Figure 2-24). Apply hard-facing to the top and sides of the tooth 2 in. up from point. Stringer beads behind a solid deposit reduces wash (Figure 2-25). Where abrasion and impact are extreme, use electrodes on pages 1-25, 1-22, or 1-20. In cases where impact is moderate and abrasion severe, use electrodes on pages 1-26, 1-25, or 1-22.

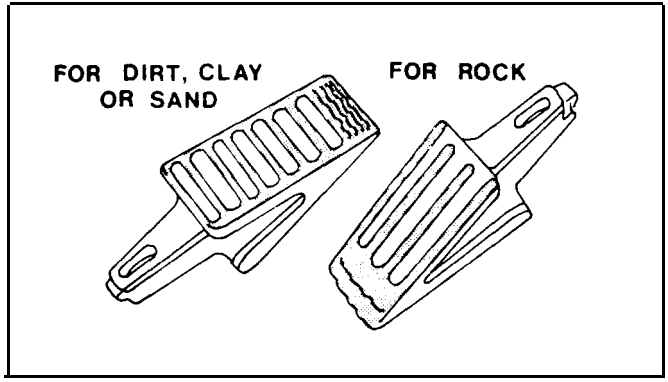


**FIGURE 2-23. Hard-Facing Shovel Teeth**

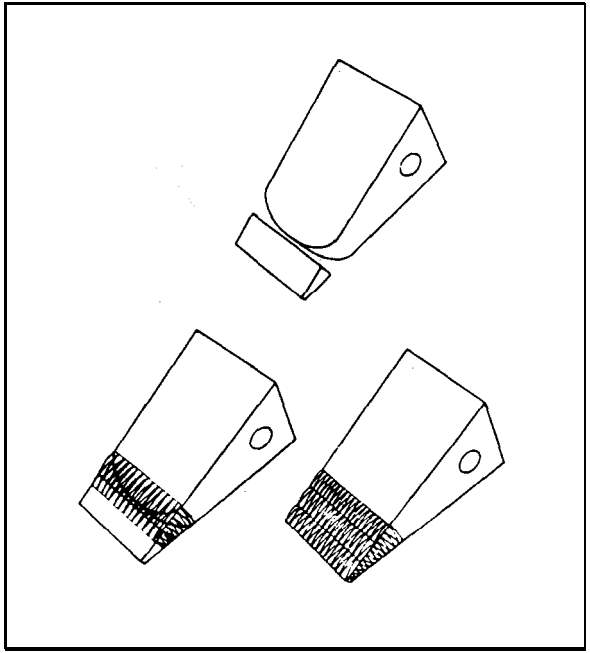

**FIGURE 2-24. Repainting Shovel Teeth**

Repainting Shovel Teeth:

Weld manganese repointer bars to manganese teeth with electrodes on page 1-22 or page 1-20. Weld carbon steel bars to carbon steel teeth using electrodes on page 1-3, 1-1, or 1-2. Weld dissimilar metals (for example, manganese bars to carbon steel teeth) with stainless electrodes on page 1-20. Hard-face repointed teeth.

Shovel Bucket Tooth Adapters

Carbon Steel

Primary Buildup Electrode: Page 1-24

Primary Hard-Face Electrode: Page 1-25

Alternate Buildup Electrodes: Page 1-5, 1-3, 1-22, or 1-20

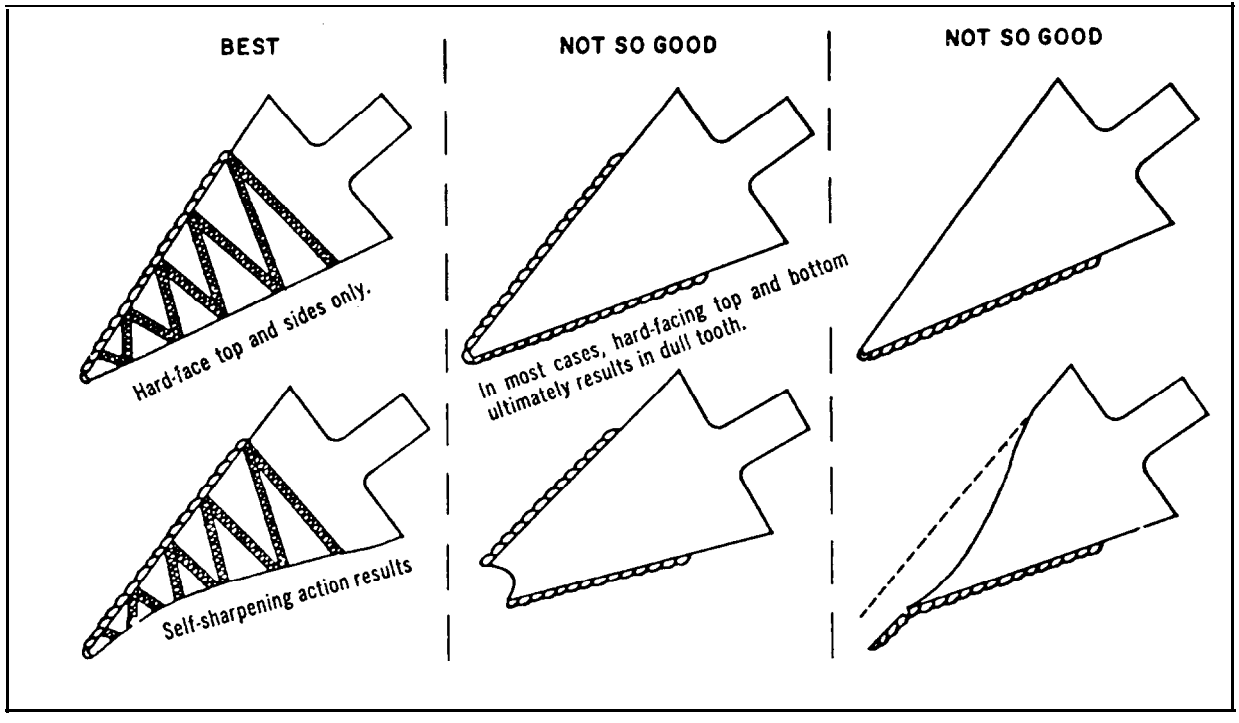


**FIGURE 2-25. Comparison of Hard-Facing Patterns for Shovel Teeth**

**SHOVEL PARTS AND ACCESSORIES**
(Continued)

Alternate Hard-face Electrodes: Pages 1-22, or 1-20

Manganese Steel

Primary Buildup Electrode: Page 1-22

Primary Hard-face Electrode: Page 1-26

Alternate Buildup Electrode: Page 1-20

Alternate Hard-face Electrodes: Pages 1-25, or 1-22

Welding Procedures: Buildup badly worn areas with recommended material. Apply stringer beads of hard-facing alloy in waffle pattern over entire wearing surface (Figure 2-26). Use electrodes on page 1-25, 1-22, or 1-20 for areas of relatively moderate wear. For extreme abrasion and impact, use electrodes on pages 1-26, 1-25, or 1-22.

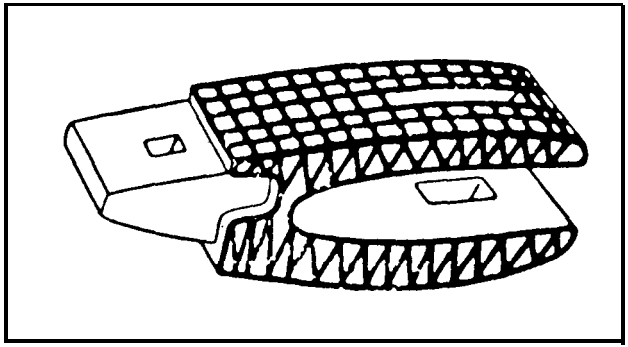

**FIGURE 2-26. Hard-Facing Shovel Bucket Tooth Adapters**

Shovel Latch Plates

Carbon Steel

Primary Electrode: Page 1-24

Alternate Electrodes: Pages 1-5 or 1-3

**SHOVEL PARTS AND ACCESSORIES**
(Continued)

Manganese Steel

Primary Electrode: Page 1-22

Alternate Electrode: Page 1-20

Welding Procedures: Rebuild to size as shown (Figure 2-27).

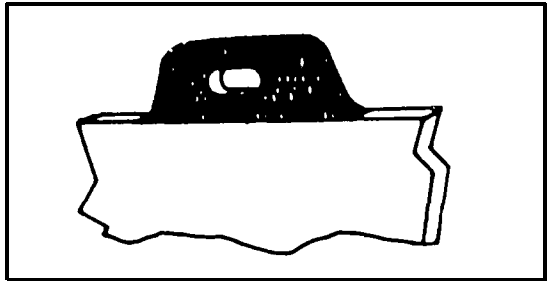

**FIGURE 2-27. Hard-Facing Shovel Latch Plates**

Shovel Latch Bars

Carbon Steel

Primary Electrode: Page 1-24

Alternate Electrodes: Pages 1-5, or 1-3

Manganese Steel

Primary Electrode: Page 1-22

Alternate Electrode: Page 1-20

Welding Procedures: Rebuild as shown (Figure 2-28); grind to size.

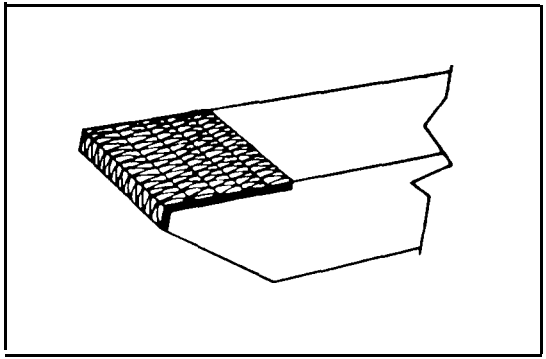

**FIGURE 2-28. Hard-Facing Shovel Latch Bars**

Shovel Boom Heels

Carbon Steel

Primary Electrode: Page 1-24

Alternate Electrodes: Page 1-5 or 1-3

Manganese Steel

Primary Electrode: Page 1-22

Alternate Electrode: Page 1-20

Welding Procedures: Apply hard-facing to worn areas (Figure 2-29). Use template to insure fit.

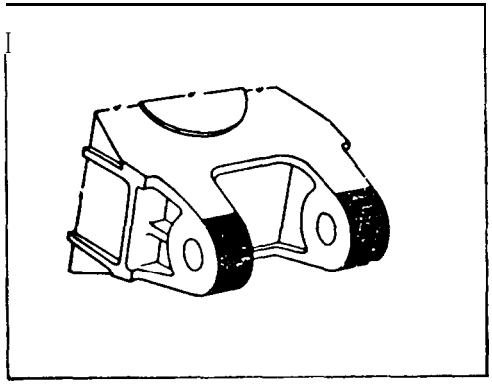

FIGURE 2-29. Hard-Facing ShoveI Boom Heels

Cable Sheaves

Carbon Steel

Primary Electrode: Page l-24

Alternate Electrodes: Pages l-22 or l-20

Welding Procedures: Position on jig so sheave can be turned for downhand welding. Build up badly worn areas and apply alloy in circumferential beads. Use slight weave (Figure 2-30). Be sure to use proper preheat and postheat where necessary.

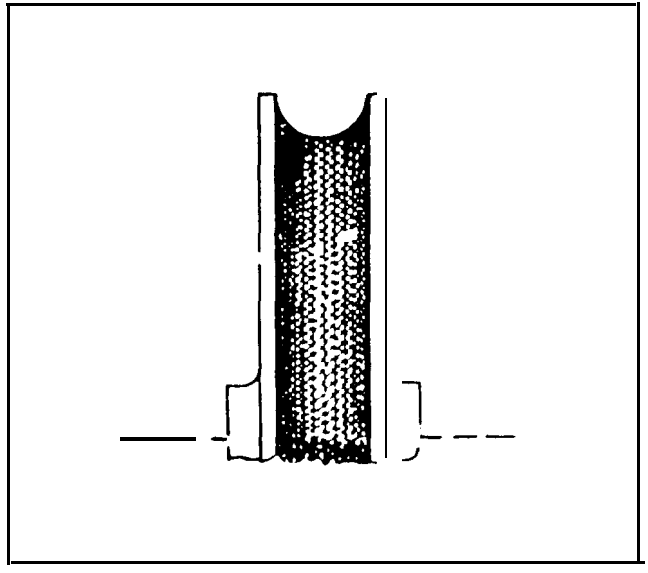

**FIGURE 2-30. Hard-Facing and Rebuilding Worn Cable Sheaves**

Dragline Pins

Carbon Steel

Primary Electrode: Page 1-26

Alternate Electrodes: Pages 1-25 or 1-22

Welding Procedures: Hard-face ends of pin using above-mentioned electrodes (Figure 2-3 1).

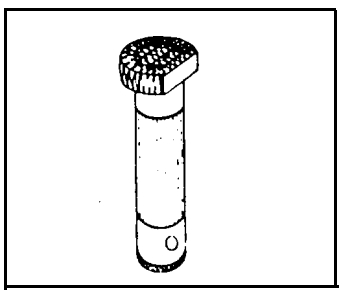

FIGURE 2-31. Hard-Facing and Rebuilding Dragline Pins

Rebuild bearing surface of pin using electrodes on pages 1-24, 1-5, or 1-3. Grind to proper size.

Dragline Chains

Carbon Steel

Primary Electrode: Page 1-24

Alternate Electrodes: Pages 1-5 or 1-3

Manganese Steel

Primary Electrode: Page 1-22

Alternate Electrode: Page 1-20

Welding Procedures: Rebuild link-to-link wear areas on carbon steel and manganese steel chains using above-mentioned electrodes (Figure 2-32). Hard-face outside wear areas of chains using electrodes on pages 1-27, 1-26, or 1-24.

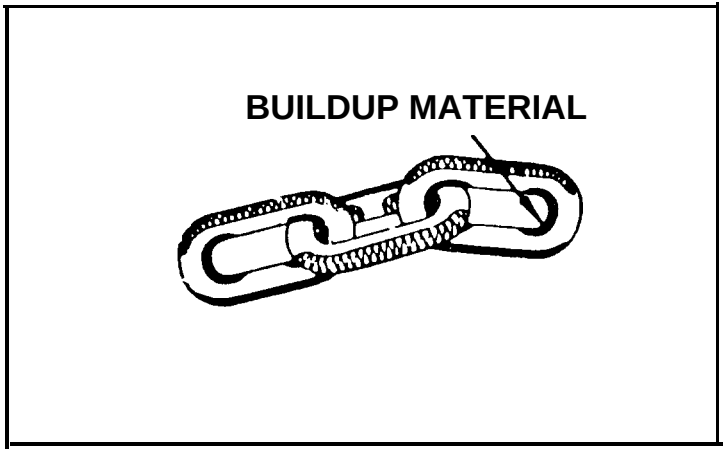


**FIGURE 2-32. Hard-Facing and Rebuilding Worn Dragline Chains**

Dragline Clevis

Carbon Steel

Primary Electrode: Page 1-20

Alternate Electrodes: Pages 1-5, 1-3

Manganese Steel

Primary Electrode: Page 1-22

Alternate Electrode: Page 1-20

Welding Procedures: Rebuild metal-to-metal wear areas on steel and manganese clevises using above mentioned electrodes (Figure 2-33). Hard-face outside wear areas using electrodes on pages 1-26, 1-24, or 1-22.

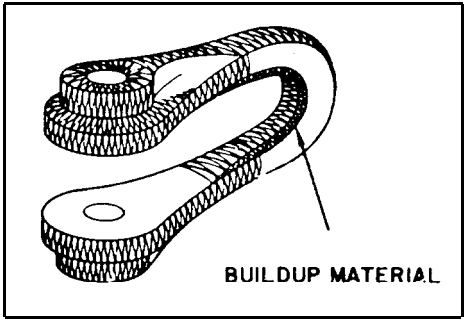


**FIGURE 2-33. Hard-Facing and Rebuilding Worn Dragline Clevis**

Clam Shell Buckets

Carbon Steel

Primary Electrode: Page 1-24

Alternate Electrodes: Pages 1-5 or 1-3

Manganese Steel

Primary Electrode: Page 1-22

Alternate Electrode: Page 1-20

Welding Procedures: Skip weld manganese lips. Steel lips need no special care other than usual procedure to prevent warpage (Figure 2-34).

Hard-face top, bottom and sides of lip using electrodes on pages 1-26, 1-25, or 1-23. Wear strips on bucket should also be hard-faced.

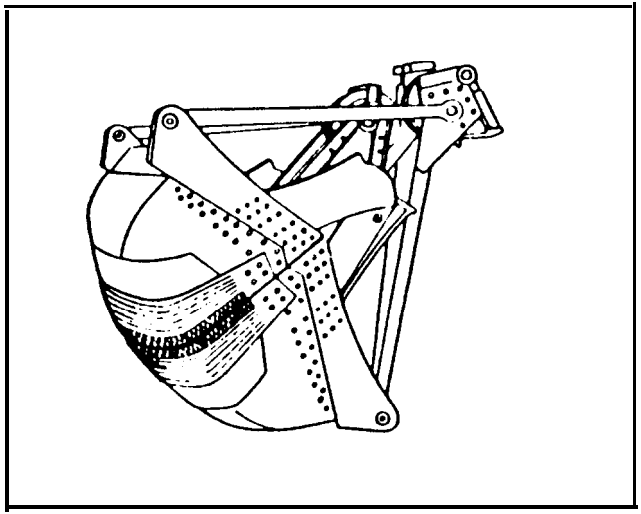

**FIGURE 2-34. Hard-Facing Clam Shell Bucket**

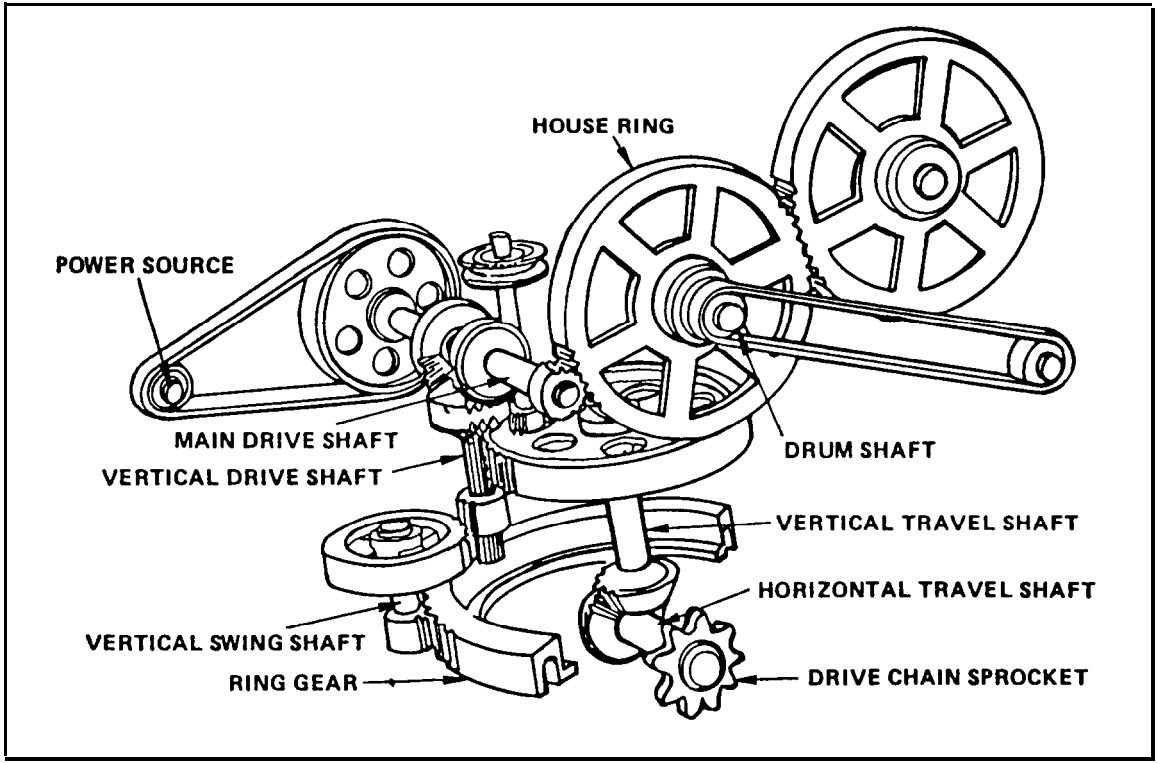


**FIGURE 2-35. Power Shovel Transmission Components**

## POWER SHOVEL TRANSMISSIONS

Shovel Ring Gears

Carbon Steel

Primary Electrode: Page 1-24

Alternate Electrodes: Pages 1-5 or 1-3

Welding Procedures: Restore worn teeth with buildup and hand-grind to finished dimensions (Figure 2-36). Be sure to use proper preheat and postheat where required.

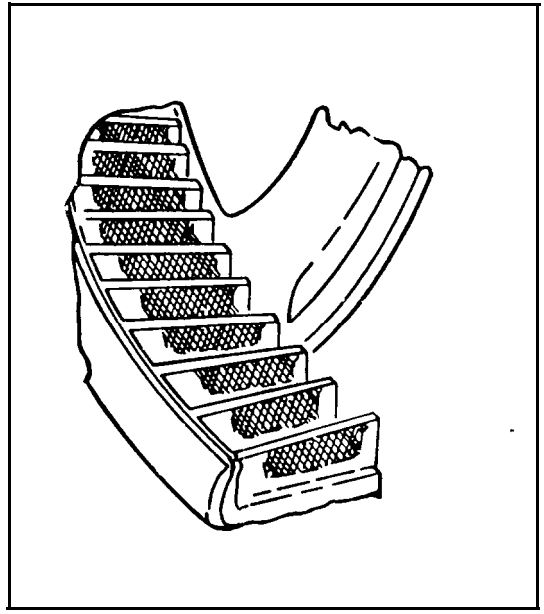

FIGURE 2-36. Hard-Facing and Restoring Worn Shovel Ring Gear Teeth

Shovel Swing Gears

Carbon Steel

Primary Electrode: Page 1-24

Alternate Electrodes: Pages 1-5 or 1-3

Welding Procedures: Restore worn teeth with buildup and hand-grind to finished dimension (Figure 2-37). Be sure to use proper preheat and postheat where required.

Horizontal Travel Gears

Carbon Steel

Primary Electrode: Page 1-24

Alternate Electrodes: Pages 1-5 or 1-3

Welding Procedures: Restore worn teeth with buildup material and hand-grind to finished size. Be sure to use proper preheat and postheat where required.

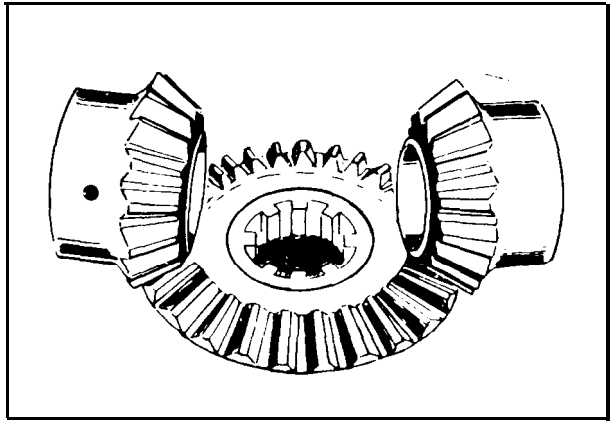

**FIGURE 2-37. Hard-Facing and Restoring Worn Horizontal Travel Gear Teeth**

House Rings

Carbon Steel

Primary Electrode: Page 1-24

Alternate Electrodes: Pages 1-5 or 1-3

Welding Procedures: Shovel house rings should be preheated to 500°F. Use recommended material to bring ring to size and finish-machine (Figure 2-38).

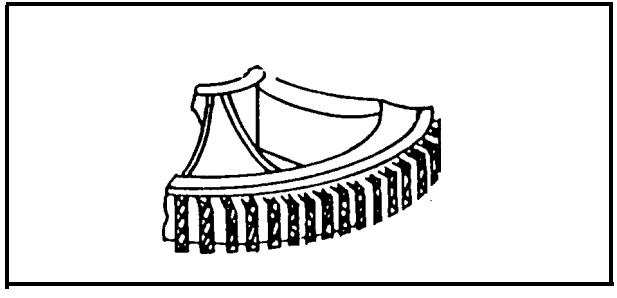

**FIGURE 2-38. Hard-Facing and Restoring Worn House Ring Gear Teeth**

**Shafts**

Carbon Steel

Primary Electrode: Page 1-24

Alternate Electrodes: Pages 1-5 or 1-3

Welding Procedures: Most shafts are made of weldable medium- or low-alloy steel and can be reconditioned using the above-mentioned electrodes to produce a check-free surface with outstanding physical properties. Large shafts should be thoroughly preheated to, and kept at, 600- 700°F during welding. Small shafts should be thoroughly soaked with a preheat of 400- 500°F. Slow cooling is mandatory.

After observing preparatory procedures, deposit 1 in. wide weave beads of the above-mentioned electrodes longitudinaly across the shaft. Overbuild about 1/8 in. to allow for finish-machining (Figure 2-39).

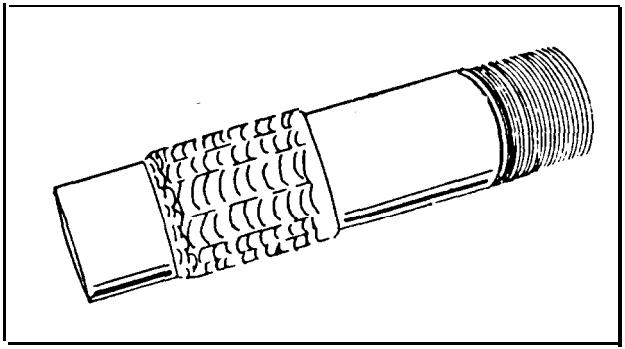

FIGURE 2-39. Hard-Facing and Restoring Worn Shafts

DITCHERS AND HOLE AUGERS

Ditcher Drive Segments

Carbon Steel

Primary Electrode: Page 1-24

Alternate Electrodes: Pages 1-5 or 1-3

Welding Procedures: Position for downhand welding (Figure 2-40). Apply hard-facing using a template to obtain proper shape. Apply beads transversely. Grind high spots.

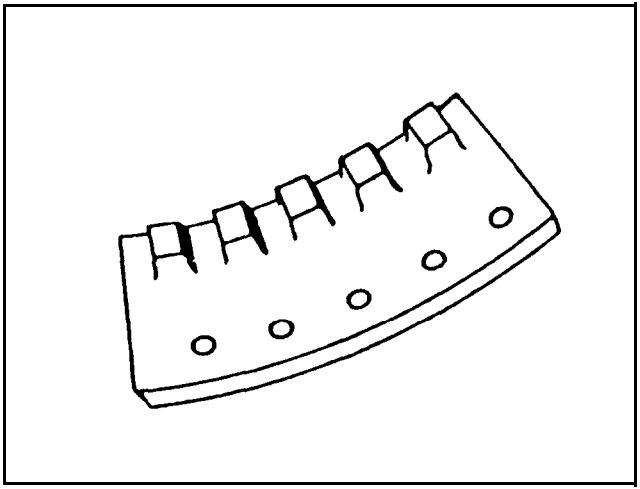

FIGURE 2-40. Hard-Facing Ditcher Drive Segments

**DITCHERS AND HOLE AUGERS** (Continued)

Ditcher Rolls

Carbon Steel

Primary Electrode: Page 1-24

Alternate Electrodes: Pages 1-5 or 1-3

Welding Procedures: Construct jig so roller can be turned (Figure 2-4 1). Apply weld metal to face and to flange where necessary. Grind high spots.

Cast Iron Rollers - Preheat to 1000- 1200°F and maintain. Use electrode on page 1-14 in wide transverse beads. Slow cool.

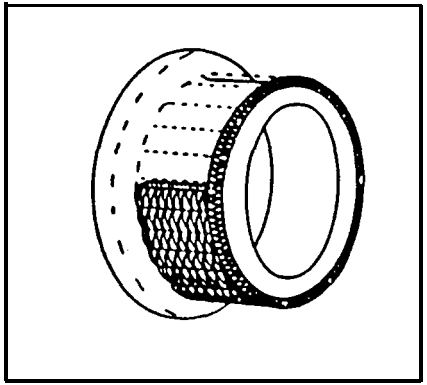

**FIGURE 2-41. Hard-Facing Ditcher Rolls**

Ditcher Drive Sprockets

Carbon Steel

Primary Electrode: Page 1-24

Alternate Electrodes: Pages 1-5 or 1-3

Welding Procedures: Position for welding (Figure 2-42). Apply buildup using a template. Apply beads transversely. Grind high spots.

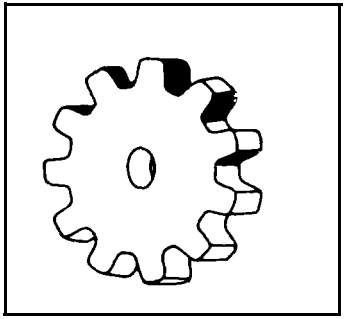

FIGURE 2-42. Hard-Facing Ditcher Drive Sprockets

Ditcher Teeth

Carbon Steel

Primary Electrode: Page 1-26

Alternate Electrodes: Pages 1-25 or 1-22

Welding Procedures: Apply above-mentioned electrodes starting at the point and extend deposits 1 in. upward (Figure 2-43).

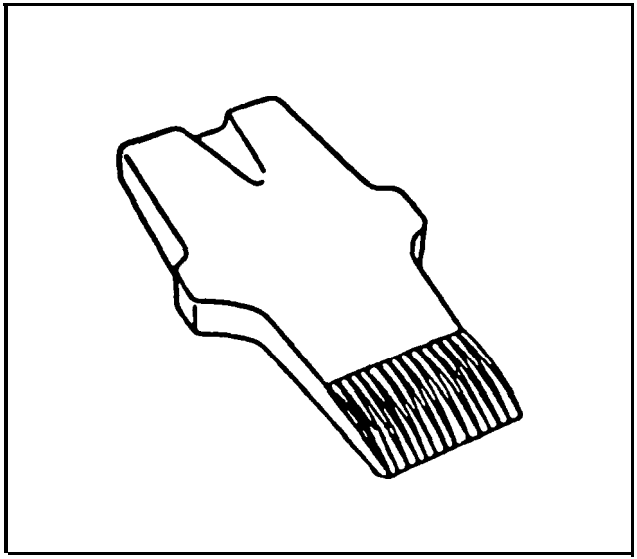

FIGURE 2-43. Hard-Facing Ditcher Teeth

**DITCHERS AND HOLE AUGERS** (Continued)

Post Hole Augers

Carbon Steel

Primary Electrode: Page 1-26

Alternate Electrodes: Pages 1-25 or 1-22

Welding Procedures: Apply above-mentioned electrodes to upper face of flight and flight periphery; hard-face top side of cutter teeth for self-sharpening action and apply hard-facing to reaming edge and cutting wings of pilot bit (Figure 2-44).

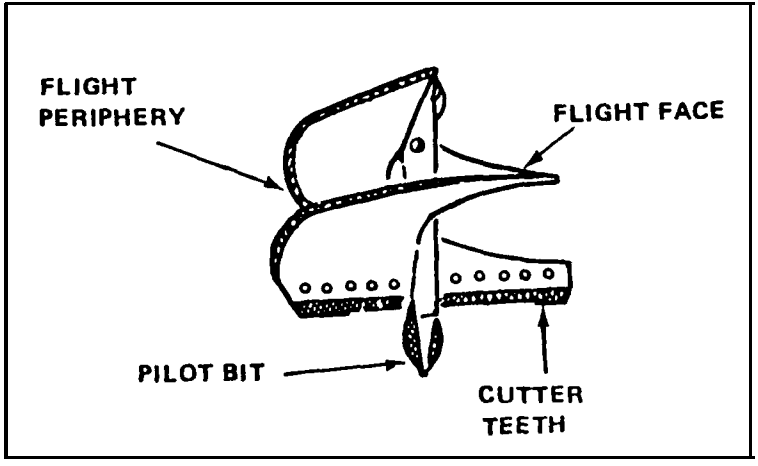


**FIGURE 244. Had-Facing Post Hole Augers**

## ASPHALT MIXERS AND PADDLES

Asphalt Mixer Paddles

Carbon Steel

Primary Electrode: Page 1-26

Alternate Electrodes: Pages 1-25 or 1-22

Welding Procedures: On weldable steel paddles hard-face outer edge and leading edge solid using above-mentioned electrodes. Apply stringers on leading face of paddle in line with material flow (Figure 2-45). Apply stringer beads around bolt hold.

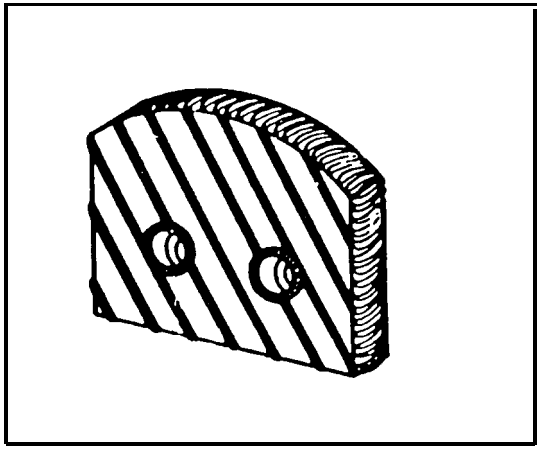

FIGURE 2-45. Hard-Facing Asphalt Mixer Paddles

Asphalt Mixer Paddle Shanks

Carbon Steel

Primary Electrode: Page 1-26

Alternate Electrodes: Pages 1-25 or 1-22

Welding Procedures: Build up leading shoulder to protect bolt; weld on suitable patch as filler. Apply hard-facing to areas shown in Figure 2-46.

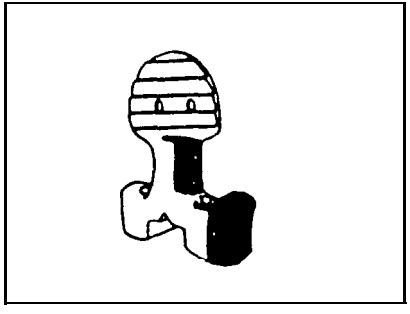

**FIGURE 2-46. Hard-Facing Asphalt Mixer Paddle Shanks**

Paving Machine Paddles

Carbon Steel

Primary Electrode: Page 1-26

Alternate Electrodes: Pages 1-25 or 1-22

Welding Procedures: Face edge and top using above-mentioned electrodes (Figure 2-47).

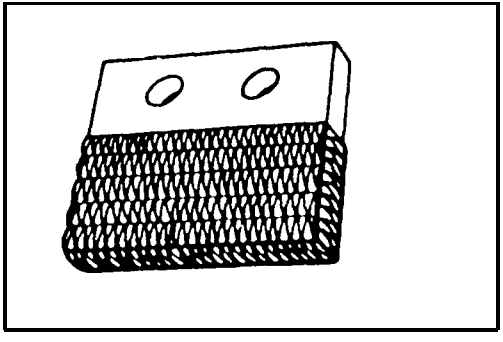

**FIGURE 2-47. Hard-Facing Paving Machine Paddles**

**ASPHALT MIXERS AND PAVERS** (Continued)

Paving Agitator Blades

Carbon Steel

Primary Electrode: Page 1-26

Alternate Electrodes: Pages 1-25 or 1-22

Welding Procedures. Apply hard-facing to top and both faces of blade (Figure 2-48).

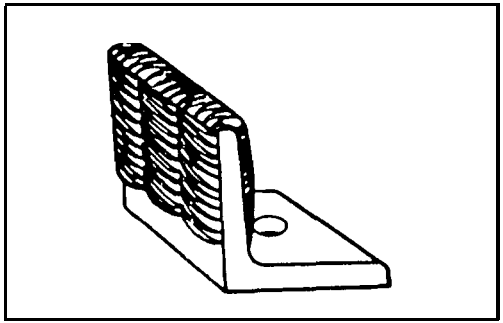

FIGURE 2-48. Hard-Facing Paving Machine Agitator Blades

Paving Screw Conveyors

Carbon Steel

Primary Electrode: Page 1-26

Alternate Electrodes: Pages 1-25 or 1-22

Welding Procedures: Apply above-mentioned electrodes where wear occurs on flight face and edges (Figure 2-49).

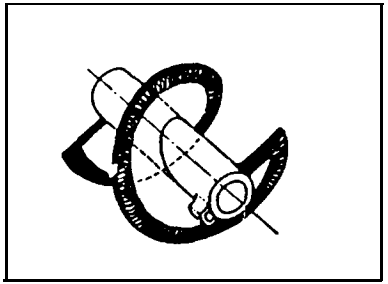

**FIGURE 249.** Hard-Facing Paving Machine Screw Conveyors

**ASPHALT MIXERS AND PAVERS** (Continued)

Scraper Cutters and Sides

Carbon Steel

Primary Electrode: Page 1-26

Alternate Electrodes: Pages 1-25 or 1-22

Welding Procedures: Remove bolt-on cutter blades from scraper before hard-facing. Overlay leading and bottom edge using above-mentioned electrodes as indicated by wear pattern (Figure 2-50). Hard-face sides with waffle pattern using electrodes on pages 1-25, 1-22, or 1-20.

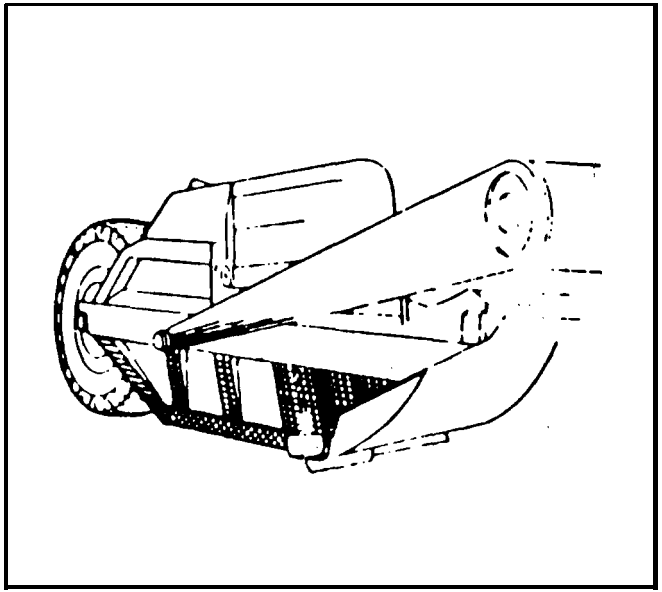

**FIGURE 2-50. Hard-Facing Scraper Cutters and Sides**

**ASPHALT MIXERS AND PAVERS** (Continued)

Scraper Blades

Carbon Steel

Primary Electrode: Page 1-26

Alternate Electrodes: Pages 1-25 or 1-22

Welding Procedures: Position blades of weldable steel in suitable prehending jig or bolt blade to scraper moldboard. Preheat to at least 400°F. Apply above-mentioned electrodes with slight weaving motion. Deposit need not exceed 1-1/2 in. width. Another method is to bolt pair of blades back-to-back and use skip-weld technique, starting at center and working toward each end, welding on the four cutting edges alternately (Figure 2-5 1).

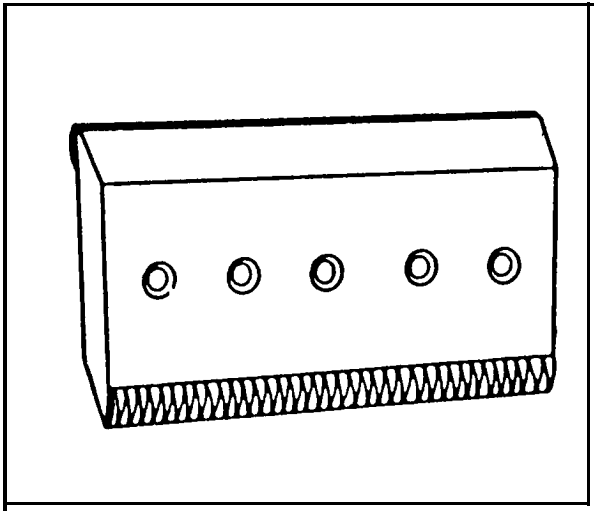

**FIGURE 2-51. Hard-Facing Asphalt Mixer Scraper Blades**

Grader Blades

Carbon Steel

Primary Electrode: Page 1-26

Alternate Electrodes: Pages 1-25 or 1-22

Welding Procedures: Position blade of weldable steel in suitable prehending jig or bolt two blades back-to-back and preheat to 500- 600°F. Apply above-mentioned electrodes in stringer beads. Use skip weld method (Figure 2-52). Start at center and work toward each end. Deposit should extend 1-2 in. up edge. (NOTE: USE ONLY 1/8 IN. DIAMETER ELECTRODE.)

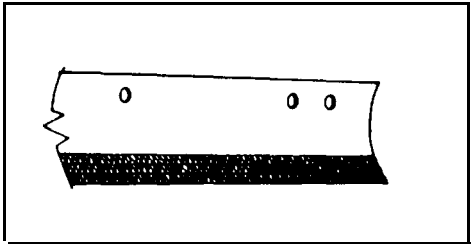

**FIGURE 2-52. Hard-Facing Grader Blades**

Grader End Bits

Carbon Steel

Primary Electrode: Page 1-26

Alternate Electrodes: Pages 1-25 or 1-22

Welding Procedures: Place grader end bit in flat position and apply beads diagonally across outer comer and along edges (Figure 2-53).

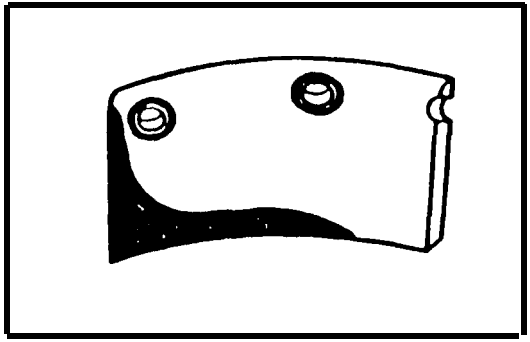

**FIGURE 2-53. Hard-Facing Grader End Bits**

Scooplift Buckets

Carbon Steel

Primary Electrode: Page l-26

Alternate Electrodes: Pages l-22 or l-20

Welding Procedures: Hard-face underside of lip (Figure 2-54). If bucket is badly worn, fabricate new lip and attach, using suitable electrodes.

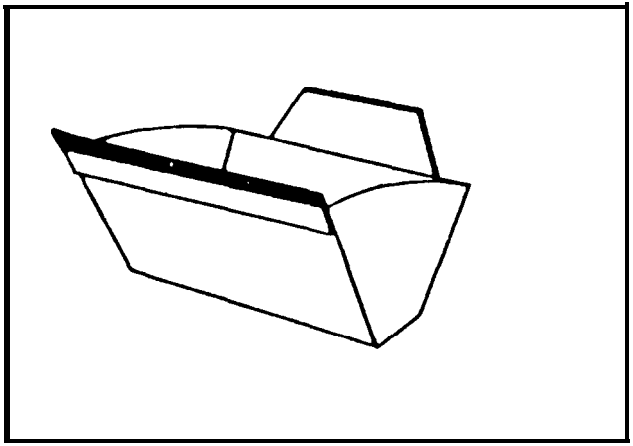

**FIGURE 2-54. Hard-Facing Scooplift Bucket Lips**

Grapple Tines

Carbon Steel

Primary Electrode: Page 1-26

Alternate Electrodes: Pages 1-25 or 1-22

Welding Procedures: Hard-face tine up about 10 in. from point with above-mentioned electrodes and deposit electrode from the point to about 4 in. up the tine (Figure 2-55).

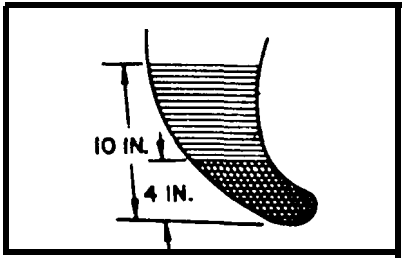


**FIGURE 2-55. Hard-Facing Grapple Tines**

Grid Compactors

Carbon Steel

Primary Electrode: Page 1-26

Alternate Electrodes: Pages 1-25 or 1-22

Welding Procedures: Raise compactor for downhand positioning. Hard-face grids (Figure 2-56).

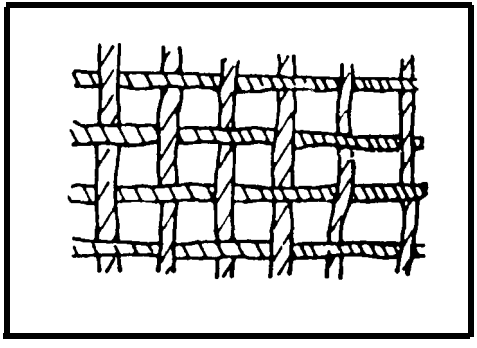

**FIGURE 2-56. Hard-Facing Grid Compactor Grids**

Sheepsfoot Tampers

Carbon Steel

Primary Electrode: Page l-26

Alternate Electrodes: Pages l-22 or l-20

Welding Procedures: Drive short lengths of old pipe to worn tamp. This can be done on round, square, or rectangular tamps. To prevent hard metal spill during hard-facing, seal the cup where it is joined to the tamp. Fill hole in ring with above-mentioned electrodes (Figure 2-57). Once welding begins, the operation should be continued until entire tamp is rebuilt.

For best service life, hard-face tamps when they are new, before putting them to work. Hard-face comers and edges with a single wash pass of electrodes on page 1-33, 1-32 or 1-29. Do not allow wear to progress more than 3/16 in. before rehard-facing.

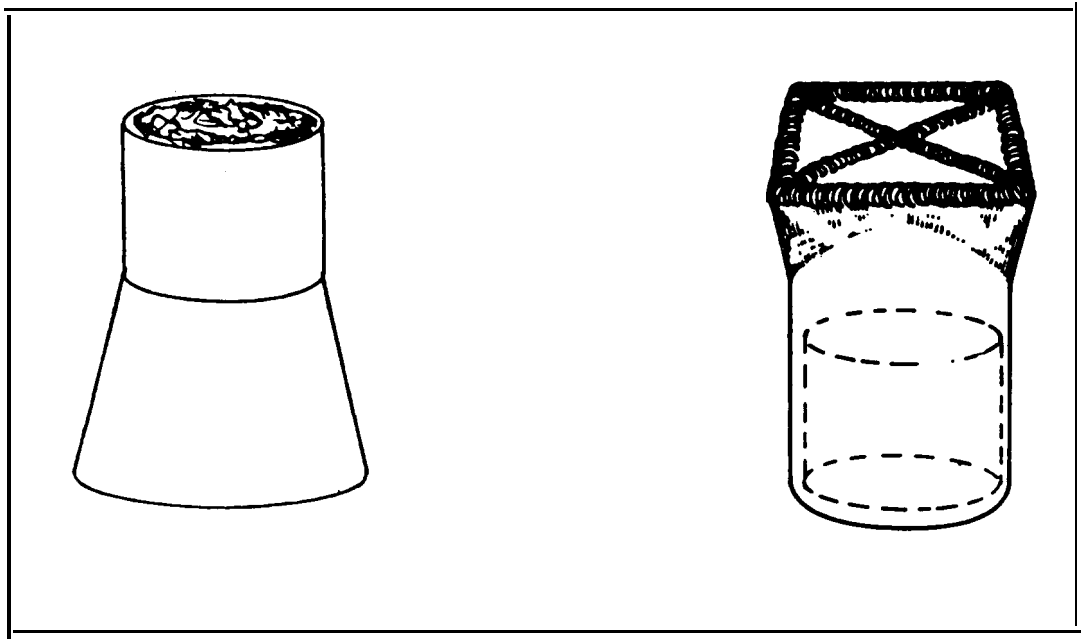

**FIGURE 2-57. Hard-Facing Sheepsfoot Tampers**

**ASPHALT MIXERS AND PAVERS** (Continued)

Curbing Machine Augers

Carbon Steel

Primary Electrode: Page 1-26

Alternate Electrodes: Pages 1-25 or 1-22

Welding Procedures: Hard-face flight faces, peripheries, and shaft with above-mentioned electrodes (Figure 2-58). Reapply hard-facing as necessary.

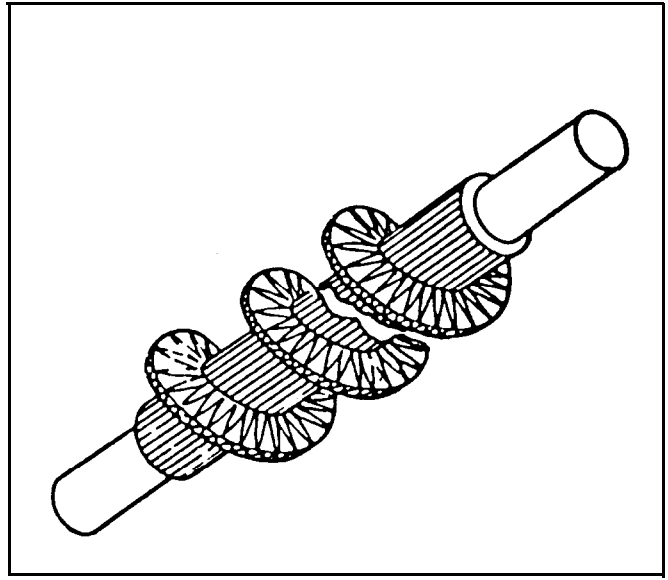

**FIGURE 2-58. Hard-Facing Curbing Machine Augers**

**ASPHALT MIXERS AND PAVERS** (Continued)

Backhoe Sidecutters

Carbon Steel

Primary Electrode: Page 1-26

Alternate Electrodes: Pages 1-25 or 1-22

Welding Procedures: Hard-face edge about 2 in. of front side of each sidecutter along edge, using above-mentioned electrodes (Figure 2-59). A perpetual self-sharpening action occurs as the unprotected bottom wears.

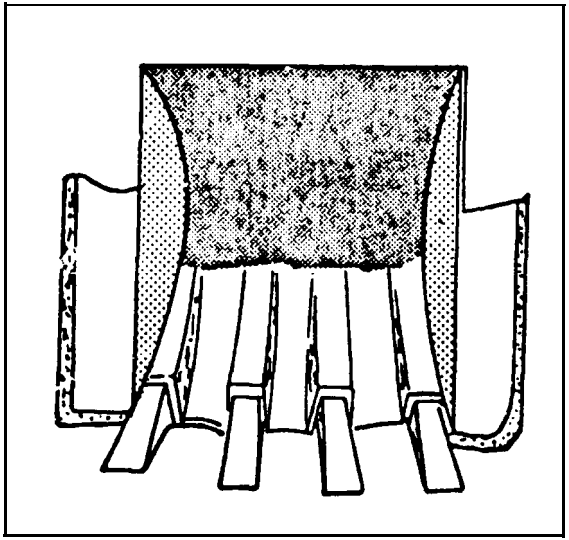

**FIGURE 2-59. Hard-Facing Backhoe Sidecutters**

**ASPHALT MIXERS AND PAVERS** (Continued)

Trencher Teeth

Carbon Steel

Primary Electrode: Page l-26

Alternate Electrodes: Pages l-25 or l-22

Welding Procedures: Hard-face edge and face of teeth, using above-mentioned electrodes (Figure 2-60).

Reapply hard-facing as necessary.

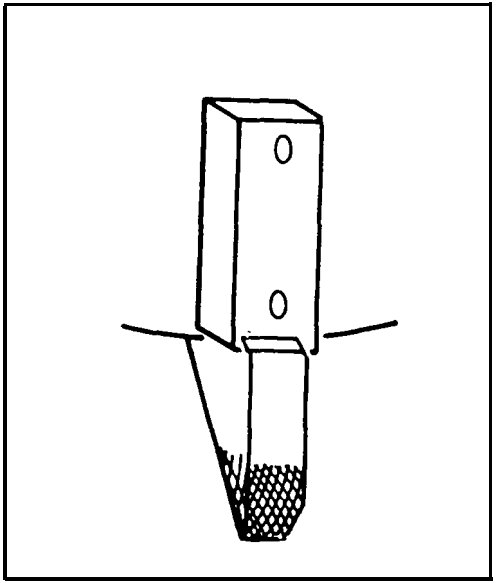

**FIGURE 2-60. Hard-Facing Trencher Teeth**

Shredding Hammers

Carbon Steel

Primary Electrode: Page 1-26

Alternate Electrodes: Pages 1-25 or 1-22

Welding Procedures: Hammers used to shred and blend top soil, clay, peat, humus compost and other abrasive materials should be hard-faced when they are new, using the above-mentioned electrodes. Apply hard metal to striking edge of hammer and lead edge of rotor plates (Figure 2-61).

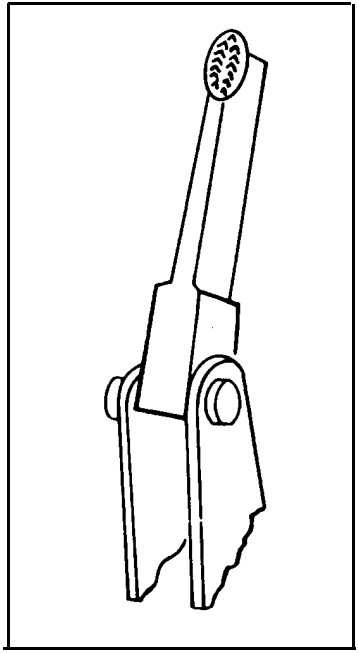

**FIGURE 2-61. Hard-Facing Shedding Hammers**

## REBUILDING AND HARD-FACING CRUSHER ROLL SHELLS

### Initial Rebuild and Hard-face of Shells

To relieve stress before hard-facing, new Manganese shells should be operated for a short period of time. After this brief initial period, during which wear should be limited to approximately 3/16 in., a regular schedule of roll upkeep should be established. If rolls are worn less than 3/1 6 in.. they can be hard-faced with recommended alloys. If excessive wear has occurred, the worn rolls must be rebuilt to size and contour before hard-facing. The amount of wear can be measured (Figure 2-62).

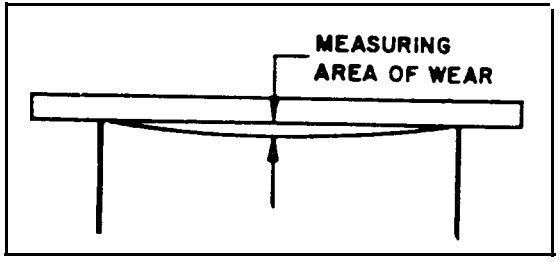


**FIGURE 2-62. Wear Measurement of Crusher Roll Shells**

### General Recommendations

There are certain procedures that are common to roll rebuilding whether welding is done manually, semi-automatically or automatically; the success of the rebuilding and hard-facing operation is as dependent upon them as upon subsequent welding techniques.

## REBUILDING AND HARD-FACING CRUSHER ROLL SHELLS (Continued)

1. Worn crusher shells should be cleaned to prevent arc interference, weld metal contamination, and possible porosity.

2. The ground should be made directly to the roll shell being welded to avoid arcing through the bearings. A rotating ground attached to the roll shaft end will provide a positive contact.

3. Cracks in the roll shell should be repaired before rebuilding. A chamfering rod can be used to gouge out any cracks down to sound metal. The crack should be filled with recommended alloys prior to rebuilding.

4. Where extensive welding is planned on one-piece shells, wedge bolts should be loosened before welding begins and retightened after the roll shell has cooled. This allows for expansion and contraction of the shell and reduces the possibility of cracking, breaking, or warping (Figure 2-63).

5. Roll shells must be kept round and both shells rebuilt to the same diameter. Out-of-round shells produce a variation in the crushing zone, resulting in unsatisfactory control of material size. In addition, unnecessary wear and strain are imposed on the bearings and shafts.

6. Weld beads are subjected to tension as they cool; to minimize surface checking or cracking, deposits are sometimes peened while hot to produce plastic flow and to change tension to compression.

7. Weld beads must not be deposited over the roll edge. Base metal cracking generally begins here. The beads should be started and stopped about 1 in. short of the roll edge (Figure 2-64), or at least far enough from the edge to allow sufficient clearance for cheek plates.

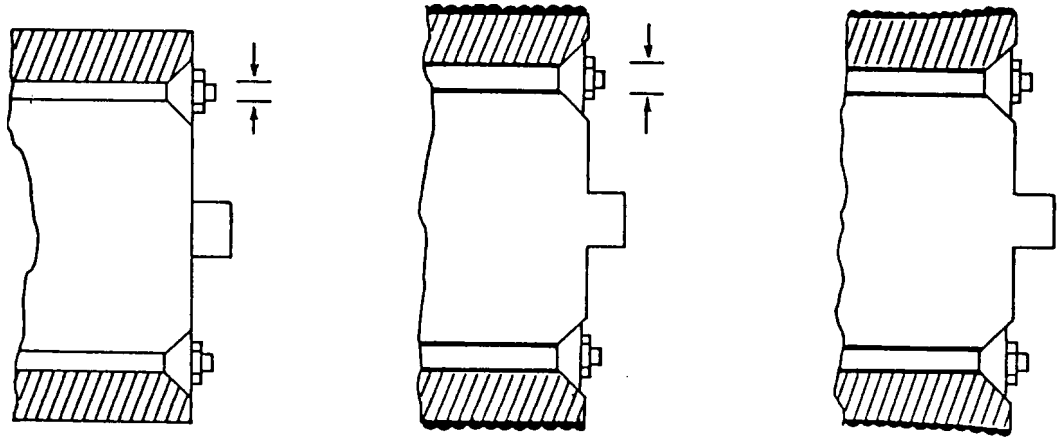

Normally tension on wedge bolts end tapered edges is exactly the same all around shell to assure positive seating.

During welding, manganese shell expands, causing wedges to pull in.

As roll contracts after welding. wedges-unless loosened prior to welding-do not back out and shell may dish or crack.

**FIGURE 2-63. Preventing Warpage of Crusher Roll Shells**

**REBUILDING AND HARD-FACING CRUSHER ROLL SHELLS** (Continued)

8. Correct amperage and stepover will insure proper bonding of weld bead to base metal. This is particularly true of high-alloy materials which, by nature, are very fluid.

   The proper combination of welding variables produces sound weld beads and provides maximum deposition rate (Figure 2-65).

9. The submerged arc process should not be used for rebuilding rolls; heat input can cause serious cracking and roll failure.

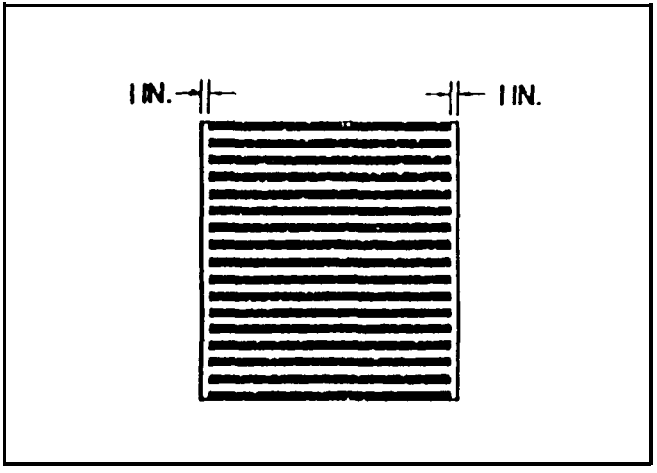


**FIGURE 2-64. Welding Limits on Crusher Roll Shells**

## REBUILDING AND HARD-FACING CRUSHER ROLL SHELLS (Continued)

When to Reapply Hard-facing

Additional hard-facing should be applied after 70-80 percent of the previous overlay has worn away, but before the base metal is exposed. Hard-facing can be repeated several times, depending on how much of the previous overlay is allowed to wear away. Generally, wear is uneven and eventually excessively thick hard metal deposits on some areas of the roll may span. When this occurs the roll should be allowed to wear until all the hard metal is gone and the shell casting has been worn 1/8 - 3/16 in. The roll can then be restored to size with recommended buildup alloys. After rebuilding the shell should be overlaid with a wear-resistant alloy. If sufficient welding time is available, all striping should be reapplied.

If time is limited, apply only every second or third gripper bead. Do not apply more welding beads to one side or section of the roll than another. This will put the roll out of round, reduce sizing efficiency, and accelerate wear on other crusher components.

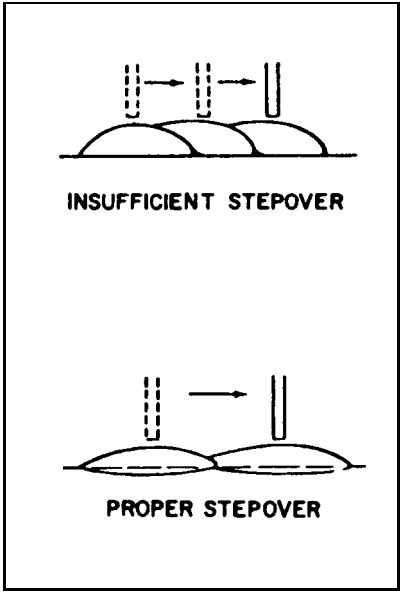


**FIGURE 2-65. Insufficient and Proper Stepover Techniques Examples**

Rebuilding Shells with the Manual Process

Always rebuild badly worn, dished rolls before hard-facing. On manganese castings, use electrodes on pages 1-22 or 1-20 with the manual process. (NOTE: NEVER USE MILD STEEL FOR REBUILDING ROLLS.)

Rebuilding Procedure

Using the skip weld process, apply transverse beads in the center section of the roll in the area of deepest wear.

Deposit three or four beads about 6 in. apart and turn the roll to a new position. Follow this pattern until weld beads are applied to the entire circumference of the roll. Continue the skip weld process until successive spaces between the original beads are gradually closed in and the entire center area of the roll is overlaid. See steps number 1 through 3 in Figure 2-66.

After the center section of this roll has been built up by this first layer, repeat the same procedure using transverse beads of longer length. See steps numbers 4 through 6 in Figure 2-66. Generally two layers are sufficient to restore roll size. If the shell is badly worn, apply additional layers. The rolls must be brought to size and correct contour before hard-facing.

A crescent weave bead of 1/2 - 3/4 in. maximum width will produce a sound deposit.

Hard-facing Crusher Shells with the Manual Process

Use electrode on page 1-25 to hard-face crusher shells. If a more abrasive resistance on the shell is desired, use electrode on page 1-26.

Welding Techniques

To assure efficient crushing, the hard metal overlay must not only be wear-resistant, it must also supply the necessary gripping action to sustain an adequate flow of material through the rolls. Maximum wear protection from any high-alloy, hard-facing overlay is provided by a two-layer deposit. DO NOT USE MORE THAN TWO LAYERS. Stacking layer upon layer will result in cracking and eventual spalling.

The best gripping and crushing action is determined by the arrangement of striping ribs on the roll face. The pattern used is determined by the type of material being crushed, the desired aggregate size, and the severity of abrasion.

One of the more popular methods of hard-facing is to cover the entire surface of the rebuilt roll shell with a single layer of hard metal, using the skip-weld procedure. After applying the first layer of hard metal, weld transverse beads of the same material across the crusher face 1-2 in. apart to provide gripping action (Figure 2-67).

Another hard-facing procedure particularly effective in crushing 3/4 in. or larger material incorporates the use of weave beads spaced 1/2 in. apart. Steps 1 through 4 (Figure 2-68) show method of application. Use the skip-weld process to stripe the center two-thirds of the roll face, first on wide spacing of about 6 in. apart, then gradually filling in areas between until the beads are no more than 1/2 in. apart.

Repeat the same procedure and skip-weld weave beads across the face of the shell directly over the first beads. Remember to start and stop welding short of the roll ends. This method of application deposits a double layer of hard metal on the center two-thirds of the roll shell, the area subjected to the most severe wear. It also results in a more uniform wear pattern across the entire roll shell surface.

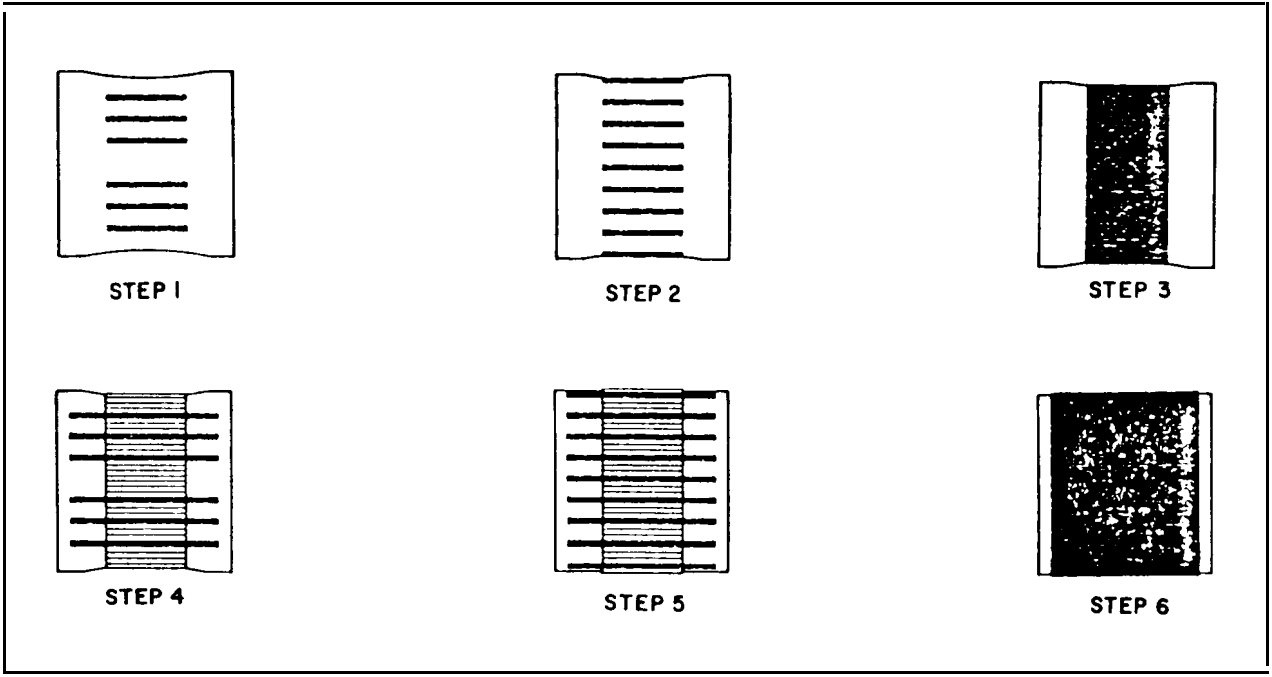


**FIGURE 2-64. Rebuilding Procedure for Crusher Roll Shells**

## REBUILDING AND HARD-FACING CRUSHER ROLL SHELLS (Continued)

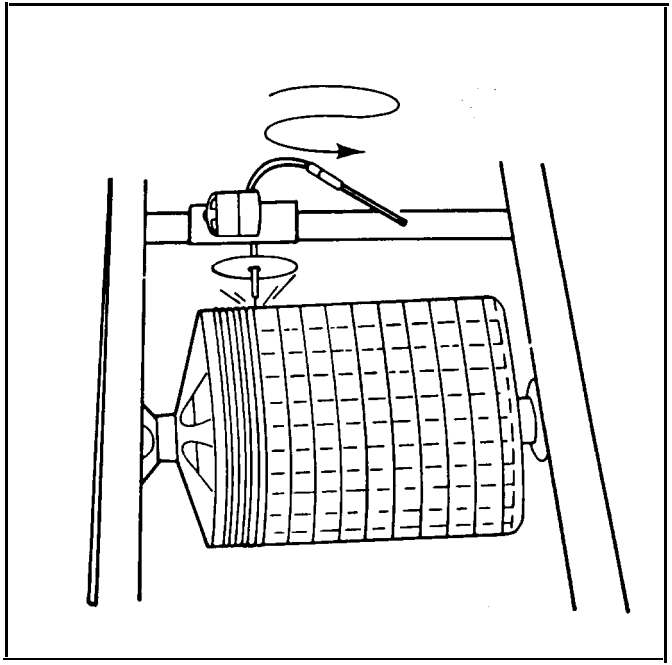

FIGURE 2-67. Hard-Facing Crusher Roll Shells

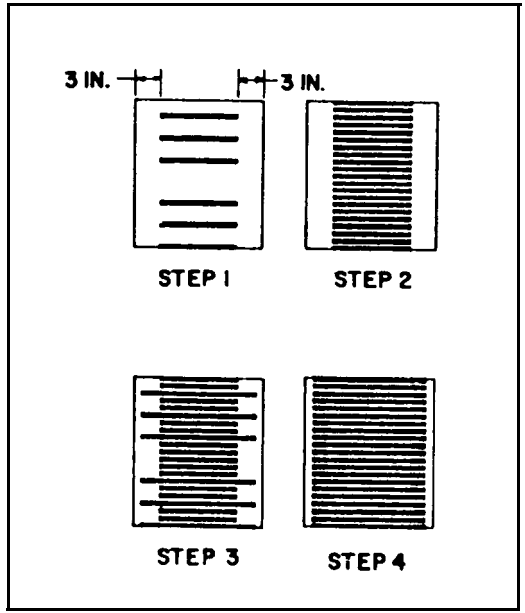


FIGURE 2-68. Crusher Roll Shell Rebuilding Technique

It is often desirable to stripe only one roll when extremely fine aggregate is being produced. A transverse deposit of hard metal is applied to the entire surface of the smooth roll, using welding procedure outlined in the section on roll rebuilding. The hard metal overlay should not be reapplied until most of the previous metal has worn off. Otherwise, severe cracking or spalling may occur.

How to Repair Cracked Manganese Rolls

The following procedures describe how to repair cracked manganese rolls (Figure 2-69).

1. Loosen all wedge bolts and wedges.

2. Vee out the crack to provide a 600 angle for welding. Remove all hard-facing adjacent to and back about 6 in. from the edges of the crack.

3. Weld heavy 4 in. angle iron 1 in. from, and parallel to, each side of the crack. Use electrode on page 1-27 to join angle iron to shell.

4. Drill or bum 1-1/8 in. holes in each angle iron on 6 in. centers to accommodate 1 in. bolts, Run bolts through angle irons and tighten nuts progressively to bring shell together.

5. Use electrodes on pages 1-22 or 1-20 to weld shell. Use weave or oscillating beads to work out all gas from molten puddle.

6. Scarf off angle iron and rehard-face where necessary.

7. Secure wedge bolts and wedges.

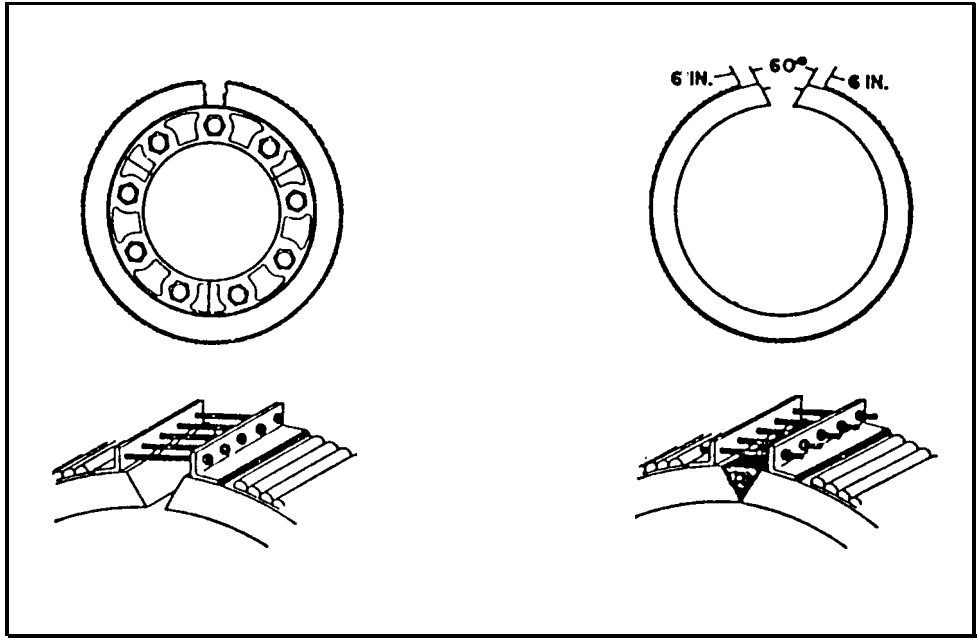


**FIGURE 2-69. Repairing Cracked Manganese Crusher Rolls**

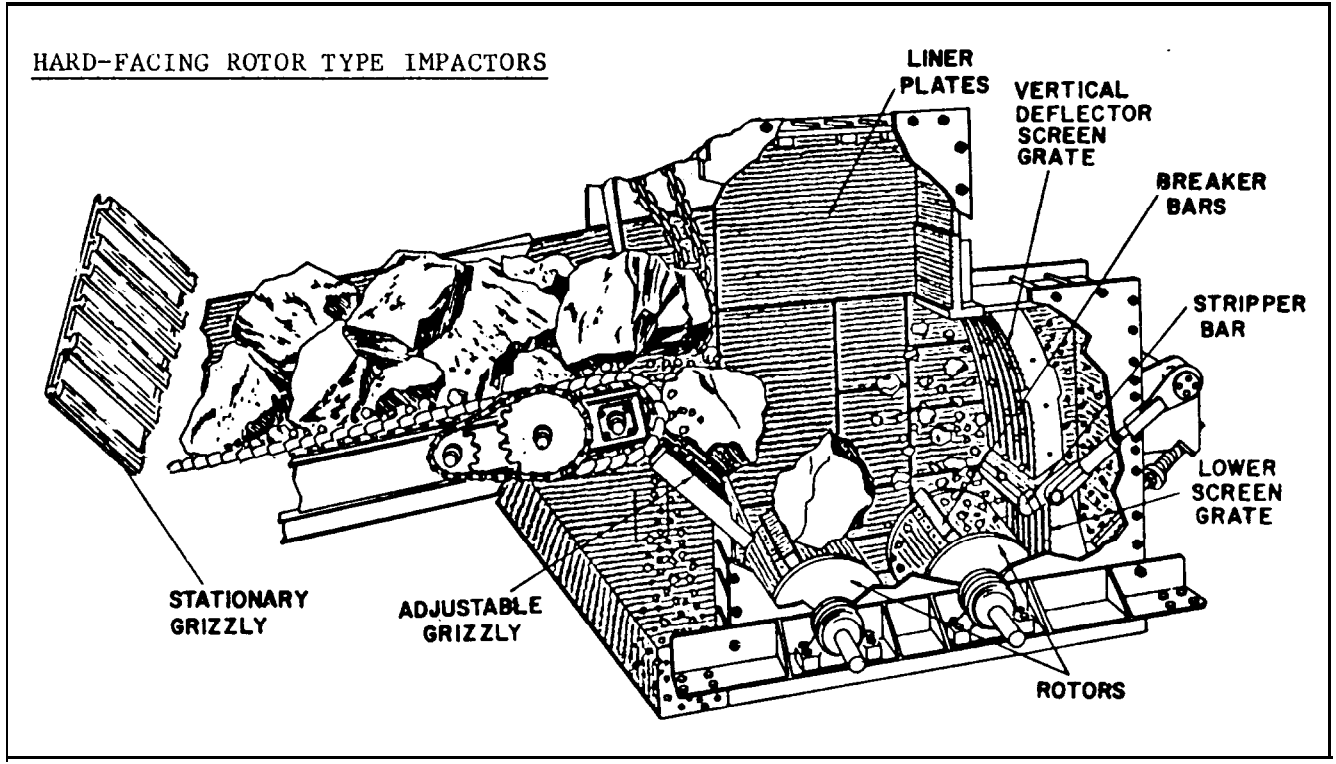


**FIGURE 2-70. Hard-Facing Rotor-Type Impactors**

**HARD-FACING ROTOR TYPE IMPACTORS**
(Continued)

Rotors and Bars

Manganese Steel

Primary Buildup Electrode: Page 1-22

Alternate Buildup Electrode: Page 1-20

Primary Hard-face Electrode: Page 1-26

Alternate Hard-face Electrodes: Pages 1-25 or 1-22

Welding Procedures: Rebuild dished rotors and bars with recommended buildup material; apply two layers of hard-facing alloy in stringer beads. When crushing materials that are extremely abrasive yet relatively easy to crumble, use electrodes on pages 1-26 or 1-25. When crushing tougher materials, and higher impact is involved, use electrodes on pages 1-25, 1-22, or 1-20.

Screen Grates

Manganese Steel

Primary Buildup Electrode: Page 1-22

Alternate Buildup Electrode: Page 1-20

Primary Hard-face Electrode: Page 1-26

Alternate Hard-face Electrodes: Pages 1-25 or 1-22

Welding Procedures: Rebuild badly worn grates with recommended buildup material and apply two layers of hard-facing alloy in transverse weld beads.

## OTHER QUARRY AND MINING EQUIPMENT

Crusher Jaws

Crusher jaws are being rebuilt and hard-faced successfully, but they represent one of the most critical applications in the crushing industry and close adherence to welding procedures is a must.

CAUTION: Do not overheat jaws made of manganese (and almost all of them are). Prevent, or at least, minimize warpage.

Welding Procedures: Pre-bend the jaw in a heavy, tilting fixture fabricated of railroad rails or equivalent (Figure 2-7 1). Skip weld to avoid overheating; do not heat jaws above 5000 for prolonged periods. Tack short manganese bars to jaws using electrodes on pages 1-22 or 1-20, as shown in Step A of Figure 2-71. Complete fillet as shown in Step B. Buildup sides of corrugations using the above-mentioned electrodes and apply two layers of electrodes on pages 1-26, 1-25, or 1-22 to top of corrugations (Step C). Complete sides with hard-facing alloy (Step D). Welding on the reverse side of jaw will normally correct minor distortion caused by shrinkage.

If you overheat the jaw or allow it to warp too much, it must be heated, straightened, reheated, and quenched - uneconomical at best.

Wobbler Feeder

This rock feeding and scalping mechanism is subject to very high impact and severe abrasion. Use electrodes on pages 1-22, or 1-20 to restore worn areas (Figure 2-72).

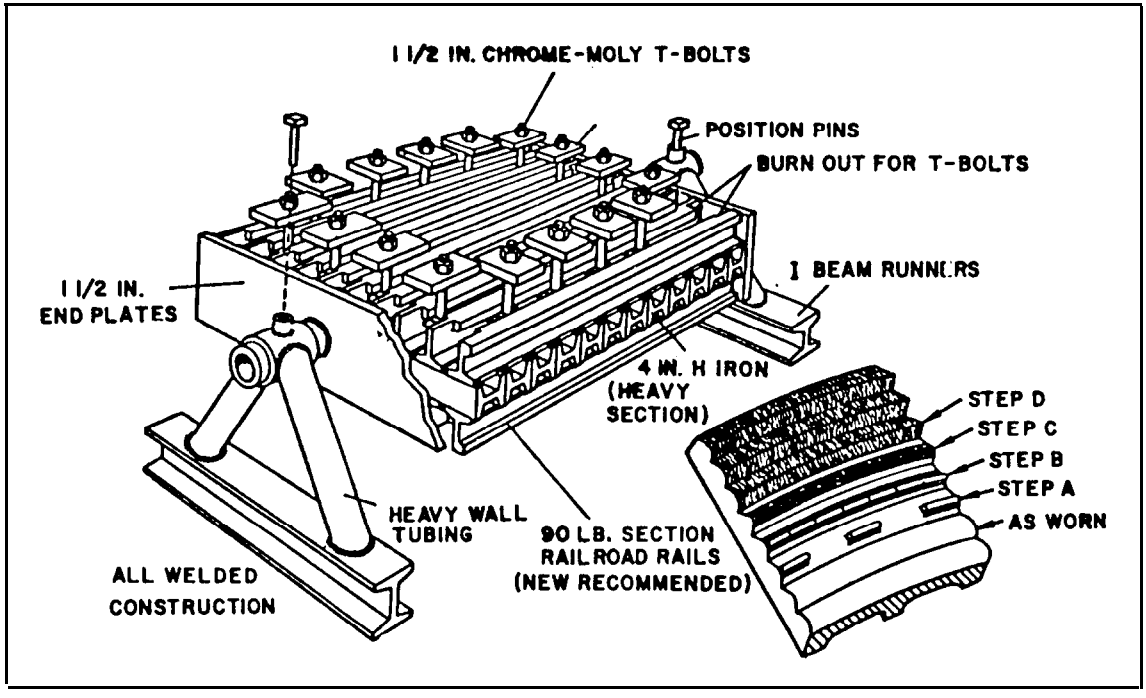


**FIGURE 2-71. Rebuilding and Hard-Facing Crusher Jaws**

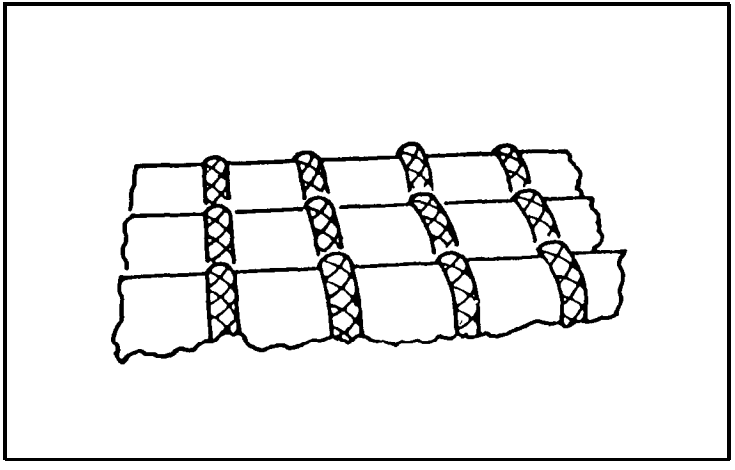

**FIGURE 2-72. Restoring Worn Areas on Wobbler Feeders**

Crusher Points

Rebuild points with electrodes on pages 1-22 or 1-20 and overlay using electrodes on pages 1-26, 1-25, or 1-22.

Scalping and Sizing Vibratory Screens

Bolt or clamp light screens to heavy plate to minimize distortion. Insert copper or carbon blocks of desired size into openings. Deposit electrodes on pages 1-22, or 1-20 around blocks. Overlay with electrodes on pages 1-26, 1-25, or 1-22 (Figure 2-73). Use same alloys on rails and screen surfaces on scalpers.

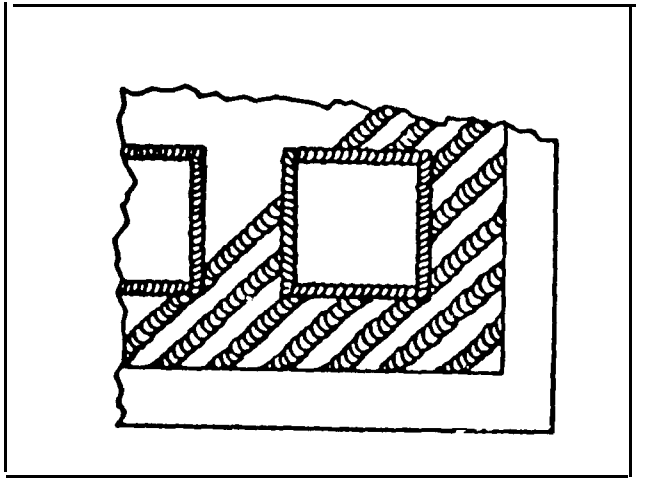

**FIGURE 2-73. Hard-Facing, Scalping, and Sizing Vibratory Screens**

Gravel Washer Auger Flights

Hard-face periphery and leading flight faces using electrodes on pages 1-26, 1-25, or 1-22 (Figure 2-74).

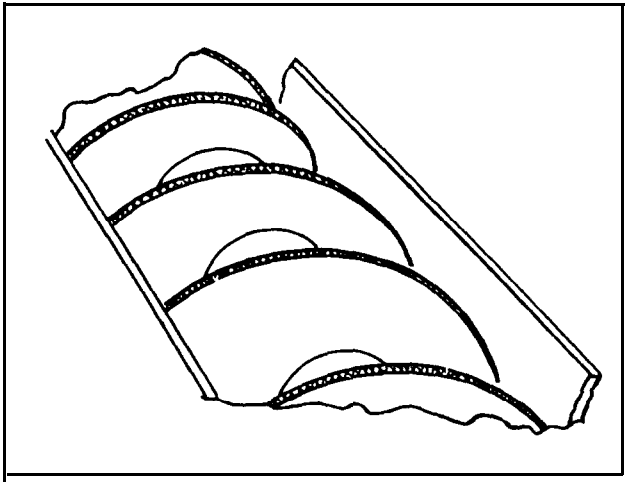

**FIGURE 2-74. Hard-Facing Gravel Washer Auger Flight**

Log Washer Paddles

Clamp copper plates to worn paddle to form proper size (Figure 2-75). Weld-cast electrodes on pages 1-22 or 1-20 to within 1/4 in. of finished size. Overlay with electrodes on pages 1-26, 1-25, or 1-22.

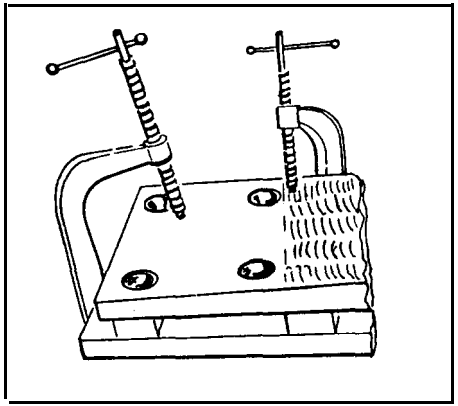

**FIGURE 2-75. Hard-Facing Log Washer Paddles**

Elevator Bucket Lips

Hard-face lips using electrodes on pages 1-26, 1-25, or 1-22 (Figure 2-76). If bucket is badly worn, fabricate new lips and attach with electrode on page 1-20 and hard-face. Hard-facing of cast iron bucket lips is not recommended.

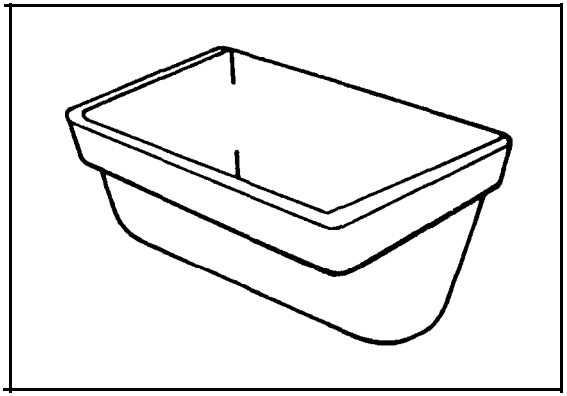

**FIGURE 2-76. Hard-Facing Elevator Bucket Lips**

**OTHER QUARRY AND MINING EQUIPMENT**
(Continued)

Quarry Drill Collars and Augers

Use electrodes on page 1-25 to hard-face flutes on drill collars. Use electrode on page 1-26 to hard-face periphery and leading flight face of drill augers (Figure

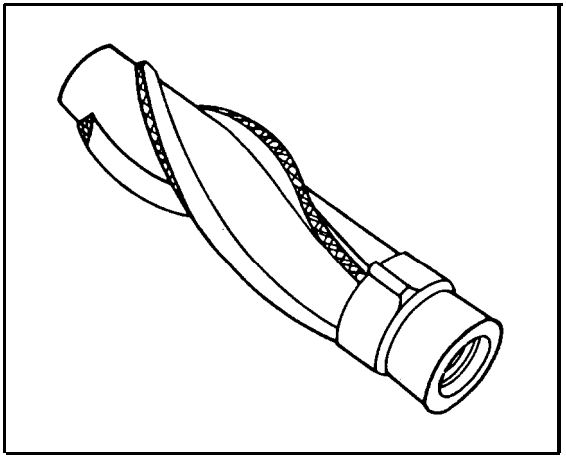

FIGURE 2-77. Hard-Facing Quarry Drill Collars and Augers

## NOTES

## NOTES

## NOTES

# Section 3. MOLECULAR METAL

## INTRODUCTION

The first part of this section contains general information about the uses, procedures, and characteristics of the Atomized Metal Repair Compound (M-41 ) used by the Department of Navy. The remainder of this section covers a more specific description of molecular metal, its uses, and usefulness.

ATOMIZED METALLIC MATERIALS KIT

NSN: 8030-01-232-1246

## COMPONENTS:

| CODE | | |
|---|---|---|
| M-41 | * 2 Units | Alloy GP Metal |
| M-42 | * 1 Unit | Smoothcoat Metal |
| M-43 | * 1 Unit | Smoothcoat Liquid Metal |
| M-44 | * 1 Unit | Rapid Metal |
| M-50 | 18 oz. | Nobond Release Agent |
| M-5 1 | 1 Pint | Cleaner/Degreaser |
| M-52 | ** 1 each | Reinforcing Bandage |
| | 2 each | Instruction Sheets |
| | 2 each | Spatulas |

* Unit = approximately 2 lbs.
** 216 square inches

This kit consists of atomized metallic materials, chemical aids and accessories for the repairs and overlays of most metals with a minimum of effort and technique. This kit costs $389.00.

## ATOMIZED METAL REPAIR COMPOUND

## (M-4l)

**ALLOY GP:**

A general purpose compound for patching, falling and bonding, and ideal for in-place repairs. Its dimensional stability allows casting to exact tolerances without machining. For example, restoring oversized bearing housings without reboring. Simply clean I.D. of housing, apply ALLOY GP close to size and insert into housing after coating proper size bearing with Nobond. Remove excess compound and allow deposit to harden.

**APPLICATIONS:**

Keyways Shafts Damaged Castings Hydraulic Rams Engine Blocks Gear Housings

**PROPERTIES:**

Coverage per one (1) unit container --------15 cubic inches
Strength begins to diminish after prolonged
exposure to temperatures over ----------225°F
Color of hardened deposits ---------- Dark Gray
Consistency of mixed compound ---------- Putty

## DIRECTIONS FOR USE

1) See general information.
2) Mix reactor (R) into Base Alloy (A) in ratios:
   By Volume -1 part A to 1 part R
   By Weight -2 1/2 parts A to 1 part R
3) Working time is approximately 25 minutes at room temperature.
4) Deposits reach handling strength in 4 to 8 hours.
5) 100% strength is attained in 16 to 24 hours.

NOTE: SURFACES TO BE BONDED MUST BE ABSOLUTELY CLEAN AND FREE OF OIL FILM OR MIST. USE CAUTION IN SELECTING CLEANING SOLVENTS. COMPRESSED AIR USED FOR DRYING MAY CONTAIN OIL OR MOISTURE.

## GENERAL INFORMATION

For maximum bonding, prepare areas to be repaired by grit blasting, machining or abrading. Clean with M-5 1 Cleaner Conditioner. Be sure areas being bonded are dry and free from moisture. Bonding and hardening are enhanced when metal surfaces are above 75 oF. In cold environments, heat parts with a flame, heat lamp or forced hot air. Be sure flame sources do not leave carbon or other deposits.

Mix Base Alloys and matching reactors to specified ratios. Variances may cause failures. Mix thoroughly until smooth lump-free consistency is achieved. Completed mix should be an even color, without streaks.

Small quantities (1 unit or less) are easily mixed by hand for 2 to 5 minutes. Large quantities should be mixed with a power paddle. A large mass will cure faster and working time is reduced. When ambient temperature or temperature of surface is below 60°F, compounds will not achieve full strength. Low temperatures may inhibit hardening. Heat deposit and part being repaired with indirect heat (lamp or warm air) to room temperature. In general, deposits harden faster when parts and deposit are heated. CAUTION: DO NOT EXPOSE DEPOSITS DIRECTLY TO FLAME.

Smooth finishes can be obtained by placing a sheet of polyethylene or waxed paper over soft deposits. Remove when hardened. Trowels or spreading tools can be moistened with water between strokes for smoother deposits when applying.

Use M-50 Nobond Wax on surfaces not to be bonded. For detailed reproductions from molds and patterns apply Nobond in several coats. Allow each coat to dry then buff before applying additional coats. Brush a thin coat of compound on mold surfaces before casting the remainder of the mix.

Use reinforcing screens and tapes to minimize warpage and to increase overall strength. When casting large, deep shapes, pour compounds in several steps, allowing prior deposits to semi-harden and cool before adding additional compound.

## ATOMIZED METAL REPAIR COMPOUND

## (M-42)

### SMOOTHCOAT

This unique alloy provides self-lubricating properties and is used to repair and protect components that have lost dimension from rubbing, sliding, galling or other frictional wear problems. Coated areas are dry, yet permanently lubricated throughout the deposit thickness. Use SMOOTHCOAT to restore and create new bearing surfaces.

APPLICATIONS:

Shafts Bearing Housings Bushings Wear Pads Slides Guides Machine Ways Pipe supports Axles Pistons Cam Followers Cams.

PROPERTIES:

Coverage per one (1) unit container --------21 cubic inches
Strength begins to diminish when exposed to
service temperature exceeding ----------250°F
Color of hardened deposits ----------Dark Gray
Consistency of mixed compound ----------Putty

**DIRECTIONS FOR USE:**

1) See general information.
2) Mix reactor (R) into Base Alloy (A) in ratios:
   By Volume -1 part A to 1 part R
   By Weight -4 parts A to 3 parts R
3) Working time is approximately 30 minutes at room temperature.
4) Deposits reach handling strength in 4 to 8 hours.
5) 100% strength is attained in 16 to 24 hours.

NOTE: SURFACES TO BE BONDED MUST BE ABSOLUTELY CLEAN AND FREE OF OIL FILM OR MIST. USE CAUTION IN SELECTING CLEANING SOLVENTS. COMPRESSED AIR USED FOR DRYING MAY CONTAIN OIL OR MOISTURE.

**GENERAL INFORMATION**

For maximum bonding, prepare areas to be repaired by grit blasting, machining or abrading. Clean with M-5 1 Cleaner Conditioner. Be sure areas being bonded are dry and free from moisture. Bonding and hardening are enhanced when metal surfaces are above 75°F. In cold environments, heat parts with a flame, heat lamp or forced hot air. Be sure flame sources do not leave carbon or other deposits.

Mix Base Alloys and matching reactors to specified ratios. Variances may cause failures. Mix thoroughly until a smooth, lump-free consistency is achieved. Completed mix should be an even color, without streaks.

Small quantities (1 unit or less) are easily mixed by hand for 2 to 5 minutes. Large quantities should be mixed with a power paddle. A large mass will cure faster and working time is reduced. When ambient temperature or temperature of surface is below 60°F, compounds will not achieve full strength. Low temperatures may inhibit hardening. Heat deposit and part being repaired with indirect heat (lamp or warm air) to room temperature. In general, deposits harden faster when parts and deposit are heated. CAUTION: DO NOT EXPOSE DEPOSITS DIRECTLY TO FLAME.

Smooth finishes can be obtained by placing a sheet of polyethylene or waxed paper over soft deposits. Remove when hardened. Trowels or spreading tools can be moistened with water between strokes for smoother deposits when applying.

Use M-50 Nobond Wax on surfaces not to be bonded. For detailed reproductions from molds and patterns apply Nobond in several coats. Allow each coat to dry then buff before applying additional coats. Brush a thin coat of compound on mold surfaces before casting the remainder of the mix.

Use reinforcing screens and tapes to minimize warpage and to increase overall strength. When casting large, deep shapes, pour compounds in several steps, allowing prior deposits to semi-harden and cool before adding additional compound.

## ATOMIZED METAL REPAIR COMPOUND

## (M-43)

**SMOOTHCOAT LIQUID:**

This is a lower viscosity compound that can either be brushed on or poured on. Deposits exhibit exceptional anti-friction properties. Deposits are self-leveling and smooth as applied. This formulation makes it ideal for fabricating holding fixtures and machining jigs as parts being held will not mar or scratch. When SMOOTHCOAT LIQUID is used to cast fixtures or patterns, detail is held to exacting tolerances. SMOOTHCOAT LIQUID is ideal for forming irregular bearing surfaces.

**APPLICATIONS:**

Anti-Friction Surfacing of all Metal Components.
Creates Bushing and Bearings without dismantling machinery.
Fabricate easy to strip Molds and Patterns.

**PROPERTIES**

Coverage per one (1) unit container --------19 cubic inches
Strength begins to diminish when exposed to
service temperature exceeding ----------250°F
Color of hardened deposits ----------Dark Gray
Consistency of mixed compound ----------Putty

**DIRECTIONS FOR USE:**

1) See general information.
2) Mix reactor (R) into Base Alloy (A) in ratios:
By Volume -2 parts A to 1 part R
By Weight -4 parts A to 1 part R
3) Working time is approximately 30 minutes at room temperature.
4) Deposits reach handling strength in 4 to 8 hours.
5) 100% strength is attained in 16 to 24 hours.

NOTE: SURFACES TO BE BONDED MUST BE ABSOLUTELY CLEAN AND FREE OF OIL FILM OR MIST. USE CAUTION IN SELECTING CLEANING SOLVENTS. COMPRESSED AIR USED FOR DRYING MAY CONTAIN OIL OR MOISTURE.

**GENERAL INFORMATION:**

For maximum bonding, prepare areas to be repaired by grit blasting, machining or abrading. Clean with M-5 1 Cleaner Conditioner. Be sure areas being bonded are dry and free from moisture. Bonding and hardening are enhanced when metal surfaces are above 75°F. In cold environments, heat parts with a flame, heat lamp or forced hot air. Be sure flame sources do not leave carbon or other deposits.

Mix Base Alloys and matching reactors to specified ratios. Variances may cause failures. Mix thoroughly until a smooth, lump-free consistency is achieved. Completed mix should be an even color, without streaks.

Small quantities (1 unit or less) are easily mixed by hand for 2 to 5 minutes. Large quantities should be mixed with a power paddle. A large mass will cure faster and working time is reduced. When ambient temperature or temperature of surface is below (60°F, compounds will not achieve full strength. Low temperatures may inhibit hardening. Heat deposit and part being repaired with indirect heat (lamp or warm air) to room temperature. In general, deposits harden faster when parts and deposit are heated. CAUTION: DO NOT EXPOSE DEPOSITS DIRECTLY TO FLAME.

Smooth finishes can be obtained by placing a sheet of polyethylene or waxed paper over soft deposits. Remove when hardened. Trowels or spreading tools can be moistened with water between strokes for smoother deposits when applying.

Use M-50 Nobond Wax on surfaces not to be bonded. For detailed reproductions from molds and patterns apply Nobond in several coats. Allow each coat to dry then buff before applying additional coats. Brush a thin coat of compound on mold surfaces before casting the remainder of the mix.

## ATOMIZED METAL REPAIR COMPOUND

## (M-43)

### RAPIDSTEEL

This Rapid Hardening Compound is ideal for emergency repairs. It will form water-tight seals on copper, aluminum, steel or any material used for fluid piping and storage. Even the most severely corroded pipes can be restored to better than new condition. To repair large areas or badly damaged sections , apply a thing coating of RAPIDSTEEL directly to surfaces, then wrap tightly with reinforcing bandage (available in various sizes). Apply a cover coat of compound and spread to desired shape.

### APPLICATIONS:

Tanks Vessels Radiators Condensor Coils Fuel Tanks Plumbing Pipes and Fixtures
Foundations and Retaining Walls.
For leveling pads under machine bases.

## PROPERTIES

Coverage per one (1) unit container --------14 cubic inches
Strength begins to diminish when exposed to
temperatures over ----------225°F
Color of hardened deposits ----------Dark Gray
Consistency of mixed compound ----------Putty

## DIRECTIONS FOR USE.

1) See general information.
2) Mix reactor (R) into Base Alloy (A) in ratios:
   By Volume -1 part A to 1 part R
   By Weight -2 parts A to 1 part R
3) Working time after mixing is approximately 2 to 5 minutes at 70°0F.
4) Deposits reach handling strength in 10 to 20 minutes.
5) 100% strength is attained in 8 to 12 hours.

NOTE: SURFACES TO BE BONDED MUST BE ABSOLUTELY CLEAN AND FREE OF OIL FILM OR MIST. USE CAUTION IN SELECTING CLEANING SOLVENTS. COMPRESSED AIR USED FOR DRYING MAY CONTAIN OIL OR MOISTURE.

**GENERAL INFORMATION.**

For maximum bonding, prepare areas to be repaired by grit blasting, machining or abrading. Clean with M-51 Cleaner Conditioner. Be sure areas being bonded are dry and free from moisture. Bonding and hardening are enhanced when metal surfaces are above 75°F, In cold environments, heat parts with a flame, heat lamp or forced hot air. Be sure flame sources do not leave carbon or other deposits.

Mix Base Alloys and matching reactors to specified ratios. Variances may cause failures. Mix thoroughly until a smooth, lump-free consistency is achieved. Completed mix should be an even color, without streaks.

Small quantities (1 unit or less) are easily mixed by hand for 2 to 5 minutes. Large quantities should be mixed with a power paddle. A large mass will cure faster and working time is reduced. When ambient temperature or temperature of surface is below 60°F, compounds will not achieve full strength. Low temperatures may inhibit hardening. Heat deposit and part being repaired with indirect heat (lamp or warm air) to room temperature. In general, deposits harden faster when parts and deposit are heated. CAUTION: DO NOT EXPOSE DEPOSITS DIRECTLY TO FLAME.

Smooth finishes can be obtained by placing a sheet of polyethylene or waxed paper over soft deposits. Remove when hardened. Trowels or spreading tools can be moistened with water between strokes for smoother deposits when applying.

Use M-50 Nobond Wax on surfaces not to be bonded. For detailed reproductions from molds and patterns apply Nobond in several coats. Allow each coat to dry then buff before applying additional coats. Brush a thin coat of compound on mold surfaces before casting the remainder of the mix.

Use reinforcing screens and tapes to minimize warpage and to increase overall strength. When casting large, deep shapes, pour compounds in several steps, allowing prior deposits to semi-harden and cool before adding additional compound.

# Section 4. MAPP Gas

## INTRODUCTION

Methylacetylene propadiene (MAPP) gas is a versatile, multi-purpose industrial fuel gas that offers excellent performance, safety, and economy. It is used to flame cut, flame weld, braze, solder, pre-heat, and for stress relief. The only equipment usually required to convert from acetylene to MAPP gas are new torch tips. One cylinder of MAPP gas will do the work of five acetylene cylinders.

## MAPP GAS IS SAFE

At 70°F MAPP gas can be used safely at full cylinder pressures of 94 psig (pounds-per square inch gauge). Acetylene is limited to 15 psig.

MAPP gas toxicity is rated “very slight”, but high concentrations (500 ppm) can have an anesthetic effect. Local eye or skin contact with MAPP gas vapor has caused no adverse response, but the liquified fuel may cause frost-like burns. MAPP gas is chemically inert to most common materials including steel, brass, most plastic and rubber. There is a slight possibility MAPP gas may react with copper, or alloys of more than 67 percent copper, to produce explosive acetylides when the gas is under high pressure. To be on the safe side, use steel or aluminum fixtures.

## DISADVANTAGES

Stabilized MAPP gas requires special tips for oxygen cutting. Sometimes high capacity mixers are required to convert equipment from acetylene to stabilized MAPP gas.

## BREAKTHROUGH IN PERFORMANCE

The performance of acetylene had never been equaled until the advent of MAPP gas. It has little or no backfire or flashback, even when the torch tip is placed right up against the work. On aluminum braze welds, MAPP gas will leave no spatter, carbon smutting or large areas of metal flux on the surrounding metal.

MAPP gas is excellent for selective flame-hardening. It bums efficiently at various oxygen-to-fuel ratios and port velocities, and permits a wide range of hardness depths. The stable, clean burning MAPP gas flame virtually eliminates dangerous flashback.

It is ideal for cambering large beams and other heating applications because it heats wider areas to a higher temperature faster than other fuels.

## HOW TO SET UP AND USE A WELDING OR CUTTING UNIT

The importance of setting up and using welding and cutting equipment CORRECTLY for all fuel gases cannot be understated since its improper use can be very dangerous. The following steps should be used for a safe operating procedure.

### Setting Up:

(1) Be sure cylinders are securely fastened so they will not fall over.

(2) Before attaching oxygen and fuel regulators to cylinders, crack the valve slightly to blow out dirt or dust. Stand away from valve openings.

(3) Be sure regulator inlet connections are clean. Attach regulators to cylinders and tighten connection nuts firmly. Never use oil on oxygen regulators or fittings or wear oily gloves when handling oxygen equipment.

(4) Be sure the regulator adjusting screw is backed all the way out. Crack the oxygen cylinder valve until pressure has built up, then open it all the way. Do not stand in front of or behind a regulator when the oxygen valve is open. Stand to one side.

(5) Be sure the fuel regulator adjusting screw is backed out. If it is, then open the fuel cylinder valve one turn.

**SETTTNG UP** (Continued)

(6) Connect the correct hoses to the oxygen and MAPP gas regulators. The oxygen hose is green and its fittings have right hand threads. The MAPP gas hose is red and its fittings, notched on the outside, have left hand threads.

(7) Open the torch's oxygen valve and adjust its regulator to the desired pressure. Purge the oxygen for approximately ten seconds for each hundred feet of hose, then turn its torch valve off.

(8) Open the torch's fuel valve and adjust to desired pressure; purge for ten seconds for each hundred feet of hose, then turn it off.

(NOTE: Purging procedures remove any mixture of gases from hoses that could cause a possible backlash.)

Lighting the Torch:

(1) Crack the fuel gas valve about 1/4 turn and crack the oxygen valve slightly. Light the torch with a striker.

(2) Adjust the oxygen and fuel gas in successive steps to the desired flame.

Extinguishing the Torch:

(1) Close the torch fuel valve, then close the torch oxygen valve,

(2) Close both cylinder valves.

(3) Open the torch fuel valve, bleed off the fuel gas, then close it.

(4) Open the torch oxygen valve, bleed off the oxygen, then close it. Release the oxygen last to prevent trapping fuel in the torch.

(5) Back out both regulator adjusting screws.

Use of Welding Tips with MAPP GAS

If you use a standard acetylene tip with MAPP gas and introduce enough oxygen to create what appears to be a neutral flame, it is actually an oxidizing flame. Although unsuitable for welding, this type of flame is recommended for most brazing operations. For brazing, the performance and consumption of MAPP gas has been determined to be generally equivalent to that of acetylene. MAPP gas has a slower flame propagation rate, so, to accommodate the same amount of fuel it is necessary to increase tip size by about one number.

A tip that overcomes the oxidizing effects of flames adjusted to the neutral position has been perfected. It consists of a flame curtain around the primary flame cone to protect it from atmospheric gases. This tip design is shown in Figure 4-1.

A tip that works well with MAPP gas is one or two sizes larger than a tip designed for acetylene (Table 4-1).

Counterboring is required for jobs that need a harsh yet stable flame. Table 4-2 lists the counterbore drill number for each tip drill size. In every case the depth of counterbore is 1/16 in.

The counterboring schedule (Table 4-2) is for use with welding tips only. Because of different flame requirements, different counterboring schedules are used for flame hardening heads and other equipment.

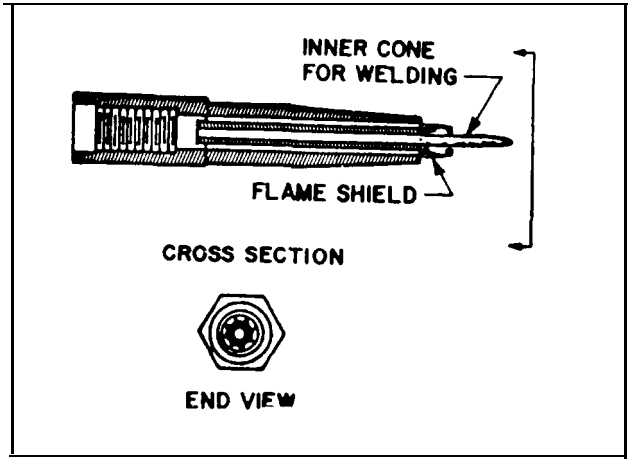


**FIGURE 4-1. MAPP Gas Torch Tip Design**

## FUSION WELDING

Flame Adjustment

A MAPP gas flame, with its characteristically longer inner cone, differs in appearance from an oxygen flame, so welders must accustom themselves to adjust the MAPP gas flame correctly. Although standard acetylene welding equipment is used to make a MAPP gas flame, a slightly larger tip is still required because of a greater gas density and a slower flame propagation rate. For welding steel, a triple deoxidized rod analyzed at 0.06-0.12 C, 1.75-2.10 Mn, 0.50-0.80 Si, 0.025 max P, and 0.4-0.6 Mo is best.

Most MAPP gas welding requires a neutral flame. Laboratory studies have shown neutral flames have a fuel-to-oxygen ratio of 1:2.3. Investigations of 1/4 in.-thick mild steel plate butt welds have shown that flame adjustment has a great effect on weld strength. Neutral flame welds had an average tensile strength of 66,000 psig, while oxidizing flame welds were as low as 35,000 psig. Welds made with a reducing flame averaged 52,000 psig.

**TABLE 4-1. Welding Tip Size and Application Using MAPP Gas**

| Drill Size of Tip | Inner Flame Length (Inches) | Regulator Pressure Range* | | MAPP Gas Consumption (cfh) | Metal Thickness (Inches) |
|---|---|---|---|---|---|
| | | MAPP Gas | Oxygen | | |
| 72-70 | 1/4 | 1-2 | 5-6 | 1-3 | UP TO 1/32 |
| 65-60 | 7/16 | 1-3 | 5-6 | 2-4 | 1/32-1/16 |
| 56-54 | 5/8 | 1-5 | 6-8 | 3-8 | 1/16-1/8 |
| 49-48 | 1 | 2-8 | 8-10 | 5-18 | 1/8-3/16 |
| 43-40 | 1 1/8 | 3-9 | 10-12 | 6-30 | 3/16-1/4 |
| 36 | 1 1/4 | 5-1o | 12-15 | 6-35 | 1/4-3/8 |

* For injector type equipment use 1-2 psig (pounds per square inch gauge) MAPP Gas and 25-30 psig oxygen for all size tips.

## Carbon Steel Welding

Carbon steel welding is done in a fixed horizontal position. Edges are prepared by machining, grinding, or flame cutting. Remove all oxidized metal with a grinder before any flame cutting welding is done. All slag, scale, rust, paint and other foreign material 1 in. from both edges, top and bottom, must be removed before welding.

The bevel must be 40 degrees on each part or 80 degrees included angle minimum. It should have a sharp edge; no land is allowed. Tack the joint at four equally spaced points with a minimum of 1/8 in. spacing. The tacks must be filed or ground to remove all oxides and tapered out to each edge of the tack. Use calibrated flow meters to keep the ratio of MAPP gas to oxygen at 1:2.7. This gas flow ratio is very critical and must be maintained. The flame will appear oxidizing.

THE PROPER WELDING TIP IS ONE SIZE LARGER THAN THAT NORMALLY USED FOR OXY-ACETYLENE WELDING.

Use the forehand method, which requires the welding to be done uphill. Hold the end of the inner cone about 1/4 - 1/8 in. from the molten puddle at an angle of 20-250 from a perpendicular line to the welding surface. Protect the molten puddle from any drafts. Apply filler metal by melting the end of the rod into the molten puddle (dip method). If a weld requires more than one pass, file or grind the preceding pass to remove all oxides. It is important that 100 percent penetration be achieved. No under cuts are permitted in the base metal at the edge of the weld. Deposit the weld metal so that it has a 1/16 - 1/8 in. reinforcement and gradually increases from the center to the edge of the weld.

Remove all oxides, scale, paint, grease, and other foreign materials before welding starts and between passes. Remove all cracks, pinholes, cold laps, and oxidized areas with a grinder before making the next pass. Preheat and/or stress relieving procedures are unnecessary except when the National Welding Code requires them.

**TABLE 4-2. Welding Tip Counterbore Schedule**

| Tip Drill Size | Counterbore Drill | Tip Drill Size | Counterbore Drill |
|---|---|---|---|
| 76 | 52 | 52 | 36 |
| 74 | 51 | 50 | 34 |
| 72 | 50 | 48 | 33 |
| 70 | 49 | 46 | 32 |
| 68 | 48 | 44 | 31 |
| 66 | 47 | 42 | 30 |
| 64 | 46 | 40 | 29 |
| 62 | 45 | 38 | 28 |
| 60 | 44 | 36 | 27 |
| 58 | 43 | 34 | 26 |
| 56 | 42 | 32 | 25 |
| 54 | 39 | 30 | 24 |

Carbon Steel Pipe Welding

Pipe welding studies comparing MAPP gas and acetylene show that they allow comparable welding speeds on pipe 2 in. or less in diameter. Oxy-acetylene welding is somewhat faster on larger pipe.

Cast Iron Welding

MAPP gas readily welds cast iron. Use a neutral flame with a welding tip that produces a bulbous pattern.

Aluminum Welding

Welding aluminum with MAPP gas requires a flame adjusted to slightly reducing. A welding tip that produces a long pointed flame is best. Use the standard procedures of precleaning, fluxing and preheating.

Copper Welding

Weld copper with an oxidizing flame. A rod meeting AWS Specification P Cu (phosphorous deoxidized copper) offers best results.

## BRAZING

A MAPP gas flame, with its deep-soaking heat characteristic, is ideal for many brazing operations. When brazing with MAPP gas, use a tip approximately one size larger than that required for acetylene to produce an oxidizing flame. Heavy braze sections usually require a tip that produces a bulbous flame. Fluxing procedures and filler rod composition are standard.

## METALLIZING

MAPP gas can be used in most common metallizing equipment to spray any material that can be sprayed using any other fuel gas. The conversion to MAPP gas can be accomplished with only minor equipment modification. It is also very suitable for applications such as preheating work pieces and fusion of powder deposits.

## FLAME HARDENING

Flame hardening is a rapid, economical method for selectively hardening specific areas on the surface of a part. The process is applied only to flame-hardenable materials, principally carbon and alloy steels, certain stainless steels, and cast irons. Flame hardening is used to harden parts to depths of 1/64 -1/4 in.

### How Flame Hardening Works

Flame hardening is any process that uses an oxy-fuel gas flame to heat carbon or alloy steel, tool steel, cast iron, or hardenable stainless steels above a certain "critical" temperature, followed by a rapid quenching. This causes the heated material to harden to some depth below its surface.

### Carbon Content and Hardness

Flame hardening seldom requires tempering because the hardening effect is shallow. Tempering also tends to reduce maximum hardness to some degree. However, insufficient heating (not up to the critical temperature, or not long enough above it), will produce a very low hardness on the workpiece surface. Most parts can be reheated after cooling to correct this problem.

Too much heat can cause low surface hardness by burning carbon out of the surface (decarburization). The workpiece will have a high carbon steel core and a soft, low-carbon iron skin. Decarburized workplaces usually cannot be reheated without cracking.

### Quenching

Cooling speed during quenching depends on the type and temperature of quenching medium used, and how fast it is agitated. Self-quenching, when a part has a sufficiently large, cool mass to draw heat away from the surface causing it to quench itself, is the slowest method and produces the lowest surface hardness.

Forced air is a mild quenchant that rapidly cools a workpiece with minimal risk of surface cracking, especially in higher-carbon steels. Oil and soluble-oil mixtures give relatively high hardness without too

Quenching (Continued)

severe a cooling rate. Water is a severe quenchant, and brine is even more so. They produce high hardness but must be used carefully to prevent surface cracking. Water gives a higher hardness than oil and can be used where surface cracking is not likely to be a problem (as it is in very high-carbon steels). Most flame hardening is done with water-cooled or water-quenching flame heads because of the extreme heat reflected from the workpiece.

Flame Hardenable Materials

Plain carbon steels for flame hardening should have at least 0.30 percent carbon. Lower carbon-steel grades can be hardened if they have first been carburized.

Cast iron can be flame hardened if it has a combined-carbon content of 0.35 percent -0.80 percent. It responds much the same way as steel of equivalent total carbon content. However, cast iron also has a lower melting point than most steels, so care must be exercised to prevent surface melting during flame hardening.

Flame Head Design

Flame head design is another important consideration in successful flame hardening. MAPP gas flame heads differ from flame heads used for other fuel gases. MAPP gas flame heads usually have No. 69 drill-size flame ports counterbored 1/16 in. deep with No. 56 drills. The rows and ports are on 1/8 in. centers and the rows are offset 1/1 6 in. Acetylene flame heads usually have No. 56 drill-size flame ports with the ports and rows on 1/4 in. centers; the ports are offset 1/8 inch, row to row.

## HOW TO FLAME CUT WITH MAPP GAS

Quality cuts are readily obtained with MAPP gas. But quality cuts require a proper balance between preheat flame adjustment, oxygen pressure, coupling distance, torch angle, travel speed, plate quality, and tip size. Fortunately, this balance is easy to achieve with the following simple operating procedures:

Preheat Flame Adjustment

MAPP gas is similar to acetylene and other fuel gases because it can be made to produce a carburizing, neutral, or oxidizing flame (Table 4-3). Flame cutting will most likely require adjustment to a neutral flame.

To adjust to a slightly carburizing flame, light the torch, then slowly increase preheat oxygen until the yellow flame turns blue with some yellow feathers remaining on the end of the pre-heat cones. To adjust to a neutral flame, twist the oxygen valve slightly until the feathers disappear and the preheat cones become sharply defined and turn a dark blue color. This flame will remain neutral, even with the addition of a small amount of preheat oxygen. To adjust to an oxidizing flame simply give the oxygen valve a further slight twist. The neutral flame will suddenly change color, from dark blue to a lighter blue, and the preheat cones will shorten. An increase in sound will also be noted (Figure 4-2).

Different fuel gases will produce different flames from the same tip. MAPP gas preheat flame cones will be at least one and one-half times longer than acetylene

**TABLE 4-3. Oxy-Fuel Ratios/ Flame Condition Comparisons**

| Flame | Oxy-MAPP Gas Ratio |
|---|---|
| VERY CARBURIZING | 2.0 TO 1 |
| SLIGHTLY CARBURIZING | 2.3 TO 1 |
| NEUTRAL | 2.5 TO 1 |
| OXIDIZING | 3.0 TO 1 |
| VERY OXIDIZING | 3.5 TO 1 |

preheat cones. Operators accustomed to acetylene and given a one-piece MAPP gas tip tend to adjust the flame as if they were using acetylene and may think the gas is too cold. In fact, such a setting with MAPP gas will not have sufficient fuel volume to produce enough heat for the job at hand.

Neutral flame adjustments are used for most cutting. Carburizing and oxidizing flames are used in special applications.

Use a “slightly carburizing” flame to stack cut light material because slag formation is minimal. If a strongly oxidizing flame is used, slag produced in the kerf may be enough to weld the plates together and slag-welded plates often cannot be separated after the cut is completed.

For cutting or piercing, use a “moderately oxidizing” flame for fast starts because it produces a slightly hotter flame temperature, and higher burning velocity than a neutral flame. An oxidizing flame is commonly used with a “high-low” device. Use a large “high” oxidizing flame to obtain a fast start. As soon as the cut is started, drop to the “low” position and continue the cut with the neutral flame.

An “oxidizing flame” may be used for beveling. When the tip is at an angle to the surface it is not using all of its preheat flames to make the bevel cut, therefore, an oxidizing flame is used to get maximum heat from the small portion of the preheat flame actually heating the critical area.

Do not use “very oxidizing” flames for fast starts. An overly oxidizing flame actually increases starting time. The extra oxygen flow does not contribute to combustion, but instead cools the flame and oxidizes the steel surface.

Oxygen Pressure

The term flame-cutting oxygen pressure always refers to the pressure at the torch, not at some remotely located regulator. Reasons for this are discussed in detail in the Oxygen Supply paragraph on page 4-23.

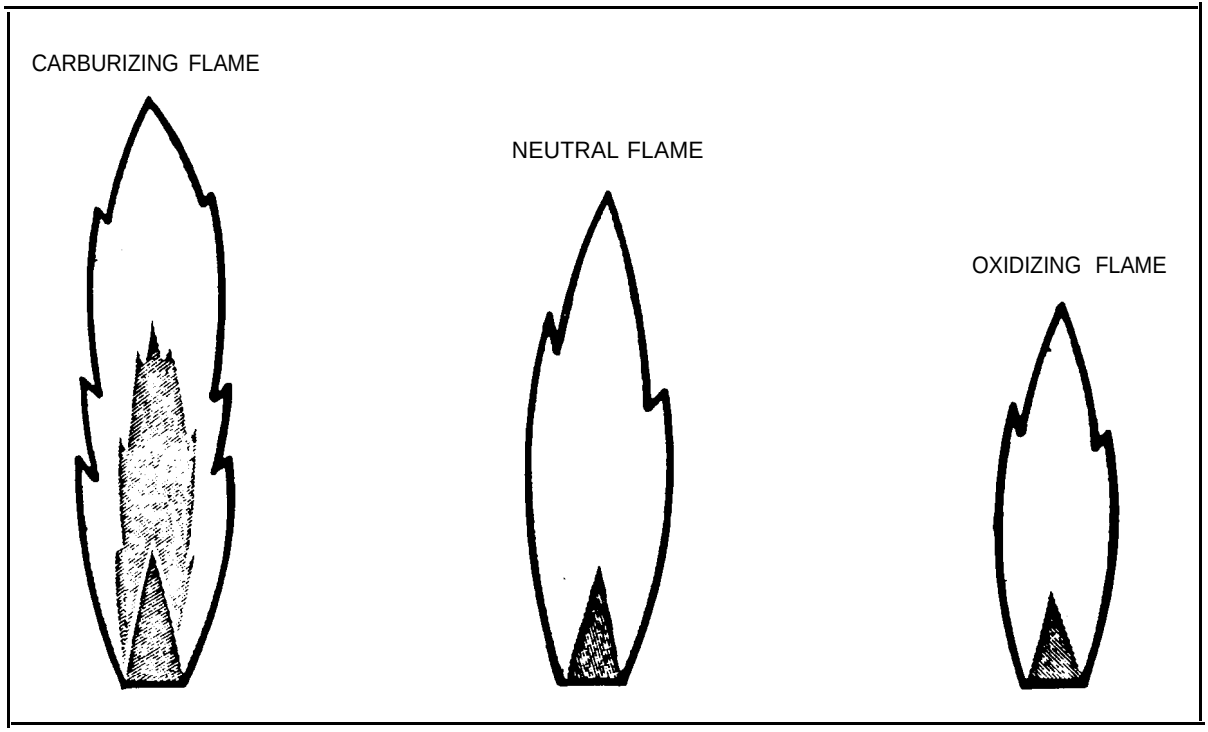


FIGURE 4-2. Preheat Flame Characteristics

Preheat Flame Adjustment (Continued)

A simple test will quickly show the best oxygen pressure to use for any given tip.

Put a low volume, soft flame on the tip, then turn the cutting oxygen on and vary the pressure to find the best looking stinger (visible oxygen cutting strewn). Low pressure gives a very short stinger, maybe two to three inches long, that breaks up at the end. Increase pressure to define and lengthen the stinger. This is the correct cutting oxygen pressure for a given tip. The long stinger will remain over a fairly wide pressure range, but as oxygen pressure is increased, the stinger returns to the short, broken form it had under low pressure. If too much oxygen pressure is used, concavity may show on the cut surface.

Too much oxygen pressure notches the cut surface because the high velocity oxygen is blowing the metal and slag out of the kerf so fast that the cut is continuously being started. If the pressure is too low, the operation will slow down too much. Excessive drag and slag dormation result, and a wide kerf maybe found at the bottom of the cut.

Cutting-oxygen pressure and travel speed affect the tendency of slag to stick to the bottom of a cut. This tendency increases as the amount of metallic iron in the slag increases.

Two things can cause high iron content in slag. Too much cutting-oxygen pressure - Oxygen forced through the kerf so fast that it blows out molten iron before it can be oxidized. Cutting speed too fast - Not enough time to thoroughly oxidize the molten iron, with the same result as high oxygen pressure.

Coupling Distance

The distance between the end of the flame cones and the workpiece is the coupling distance. Some consider the distance between tip and workpiece to be the coupling distance, however, since flame lengths vary with different fuels and flame adjustments, the distance between the end of the preheat cones and the workpiece is the preferred measure (Figure 4-3).

Coupling Distance (Continued)

Keep preheat cones about 1/16 - 1/8 in. off the surface of the work when using MAPP gas to cut ordinary plate thicknesses of 2-3 inches. Let the preheat cones impinge on the surface for faster preheating for piercing, or very fast starts. Above 6 in. plate thickness, increase the coupling distance to get more heat from the secondary flame cone as the secondary MAPP gas flame preheats thick plates far ahead of a cut. For material 12 in. thick or more, use a coupling distance of 3/4 to 1-1/4 in. long.

Torch Angle

The torch angle, or lead angle is the acute angle between the axis of the torch and the workpiece surface when the torch is pointed in the direction of the cut (Figure 4-4). When cutting light-gauge steel (up to 1/4 in. thick) a 40-50 degree torch angle allows much faster cutting speeds than a torch mounted perpendicular to the plate. Speed can be increased on plate up to 1/2 in. thick by increasing the torch lead angle to 60-70 degrees. When cutting plate over 1/2 in. thick, acute lead angles offer no advantage and should be cut with the torch perpendicular to the workpiece surface.

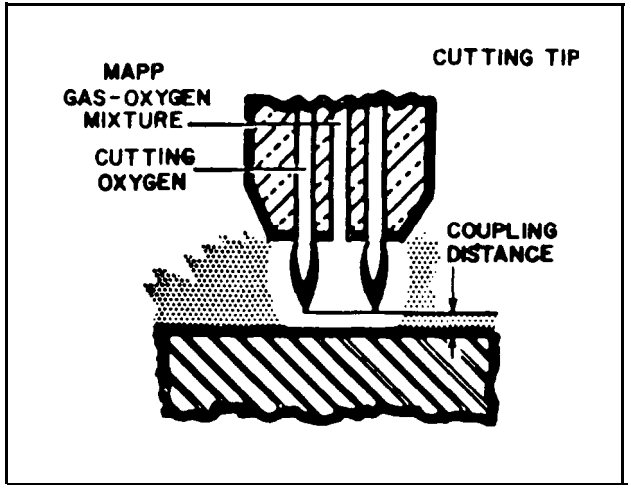


**FIGURE 4-3. Correct Measurement of Coupling Distance**

Torch Angle (Continued)

An angled torch cuts faster on thinner-gauge material. The intersection of the kerf and the surface presents a knife edge which is easily ignited. Once the plate is burning, the cut is readily carried through to the other side of the work. This avoids problems of non-drop cuts, incomplete cutting on the opposite side of the thicker plate, gouging cuts in the center of the kerf and similar problems.

Travel Speed

Each job has a best cutting speed. A high quality cut will be obtained on plate up to about 2 in. thick when there is a steady “purring” sound from the torch and the spark stream under the plate has a 15 degree lead angle; the angle made by the sparks coming from the bottom of the cut in the same direction the torch is traveling. If the sparks go straight down, or even backwards, travel speed is too high.

Nature of the Workpiece

Variations in cut quality are the result of different workpiece surface conditions or plate compositions. For example, rusty or oily plates require more preheat, or slower travel speeds than clean plates. Most variations from the ideal condition of a clean, flat, low-carbon steel plate tend to slow down cutting action.

For a very rusty plate, set as big a preheat flame as possible on the torch and run it back and forth over the line to be cut. Extra preheat passes do two things. First, they span off much of the scale that interferes with the cutting action, and they put extra preheat into the plate to allow improved cut quality and speed.

Cut a little bit slower when working with high-strength low-alloy plates (ASTM A-242 steel), or full alloy plates (ASTM A-5 14). Also, because these steels are more sensitive to notching than ordinary carbon steels, use low oxygen pressure.

Clad carbon alloy, carbon stainless, or low-carbon--high-carbon plates require a lower oxygen pressure, and perhaps a lower travel speed than straight low-carbon steel. Be sure the low-carbon steel side is

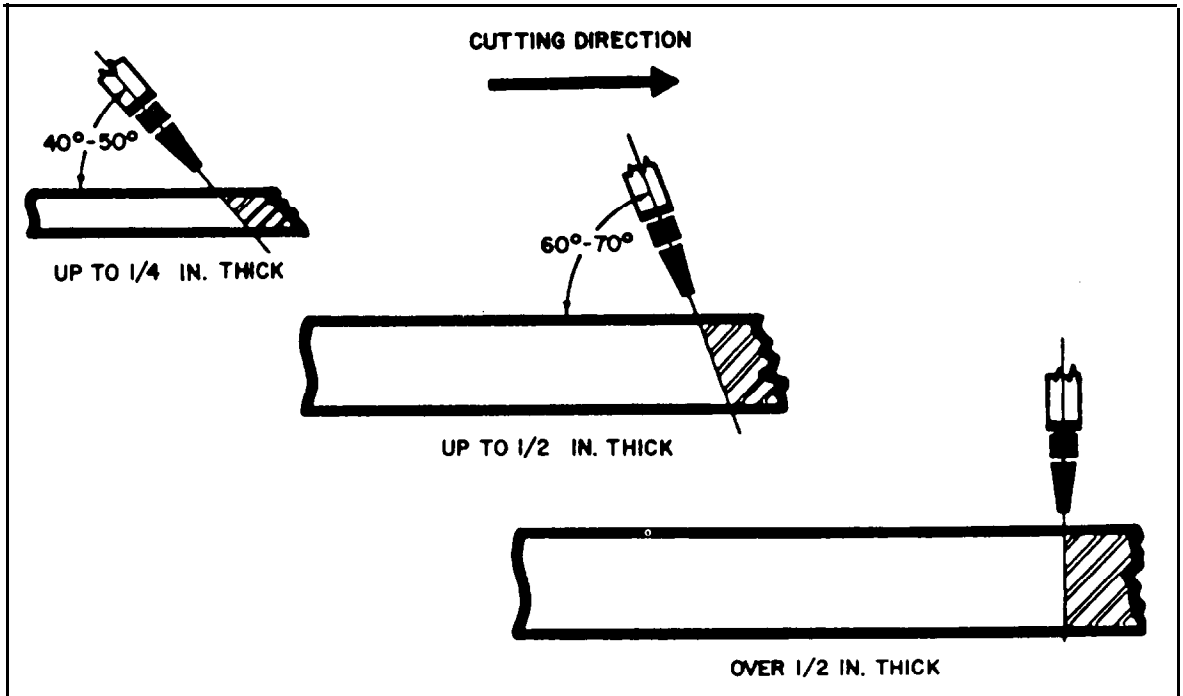


**FIGURE 4-4. Corrrect Torch Angles**

Nature of the Workpiece (Continued,

on the same side as the torch. The alloyed or higher carbon cladding does not bum as readily as the carbon steel.

By putting the cladding on the bottom, and the carbon steel on the top, a cutting action similar to powder cutting results. The low-carbon steel on top bums readily and forms slag. As the iron-bearing slag passes through the high-carbon or high-alloy cladding, it dilutes the cladding material. The torch, in essence, still bums a lower carbon steel. If the clad or high-carbon steel is on the top surface, the torch is required to cut material that is not readily oxidizable, and forms refractory slags that can stop the cutting action.

Tip Size and Style

All steel sections have corresponding tip sizes to allow the most economical operation for a particular fuel. Any fuel will burn in any tip, of course, but not as efficiently and may even overheat enough to melt the tip or cause problems in the cut.

For example, MAPP gas does not operate at peak efficiency in most acetylene tips because the preheat orifices are too small. If MAPP gas is used with a natural-gas tip, the tip will overheat and become susceptible to flashback. In an emergency, a natural-gas tip can be used with MAPP gas by removing its skirt. Similarly, an acetylene tip can be used if inefficient burning can be tolerated for a short run.

Oxygen Supply

Oxygen supply means two things - volume and pressure. Both are needed to obtain a decent stinger to provide a good quality cut. If all the oxygen volume in the world is available, and the pressure is low, the oxygen system will be deficient. Also, very high oxygen pressures will not help when only a small volume of oxygen is available over a given time.

It is as important to have a generous supply of oxygen as it is to have well-trained burners, good equipment, and a quality fuel gas. Insufficient oxygen usually

results from undersized piping coming into a plant, or regulators that do not have sufficient capacity for making heavy cuts. Deficient cutting oxygen supplies often result from very long hoses, hoses too narrow in diameter, or hoses that have been chopped up and patched together with couplings.

When depressing the oxygen lever results in a large pressure drop, something is wrong. This pressure drop is most readily seen in two-hose torches because insufficient oxygen causes the preheat flame to become very carburizing when the cutting oxygen valve is opened. Check the regulator and the oxygen piping system immediately.

Cutting oxygen is usually at least 99.7 percent pure. When lower purity oxygen gets into the lines, it is just about impossible to make a decent cut at respectable speeds. Impure oxygen is often the last thing one suspects, and is often not discovered until a cylinder change - and suddenly everything starts working the way it should.

## Starting a Cut

Cuts can be started at an edge or any other point on the surface of a plate.

There are several ways to start an edge cut, but the most common procedure is to position the tip (either by hand or by machine) so that the preheat flames heat the top comer of the plate while the cutting oxygen hole is centered over the comer. When the plate becomes bright cherry-red, turn on the cutting oxygen and start torch travel.

Another edge-starting technique is preheating the plate. Move the torch slowly back and forth along the line of cut several times for a distance equal to the plate thickness. Pull the torch slightly away from the edge, turn on the cutting oxygen and begin torch travel. A cut started with this technique allows normal cutting speeds the moment the torch reaches the plate edge.

Piercing is used to start cuts at some point away from an edge when the shape or location precludes an edge start.

When hand piercing for a start, the flames should impinge on the plate surface while the torch is moved with small circular motions over the area to be pierced. When a hot spot is formed, the cutting oxygen is turned on slowly while the torch is raised simultaneously, and travel is started along the line of cut .

A hole can be pierced in very thin plate without moving the torch, however, it is very important to raise the torch on thicker plate as travel begins. If this is not done, slag will blow out and hit the torch tip, either getting it dirty or burning it. Travel should never be directly away from the operator because slag and sparks will emerge in a direction opposite the line of cut and may cause bums.

Another hand piercing method is to make a hot spot, then rotate the torch so the tip is angled away from the direction of travel. Start the cutting oxygen, rotate the torch until the tip is perpendicular to the plate, then lift the torch and keep it moving along the line of cut.

Machine piercing starts are essentially the same as hand piercing starts. Some machines are equipped with torch lifters so that torches can be moved up as the pierce is started. Other machines have “Hi-Lo” devices with a heavy preheat flame for making a hot spot without getting the tip too close to the plate surface. Some machines also have an oxygen ease-on valve so that cutting oxygen will build up to full volume slowly. Cutting oxygen and travel should always be started simultaneously. Always protect the cutting tip from blown slag.

## SPECIAL CUTTING JOBS

### Gouging

Gouging applications include removing tack welds, defective welds, blowholes or sand inclusions in castings, welds in temporary brackets or supports, flanges from piping and heads, and old tubes from boilers. Gouging is also used in demolition work and to prepare plate edges for welding.

Gouging (Continued)

Manual gouging is a rapid metal removal method. Speeds from 12-84 ipm (inches per minute) are possible; 24 ipm across 1/4 in. plate will make a gouge 3/8 in. wide. Gouging accuracy can be controlled to width and depth tolerances of about 1/16 in., depending on the skill of the operator.

Piercing and Washing

Piercing is used to cut holes in a workpiece. An important example is rivet piercing. Rivets and similar fasteners can be removed entirely from a workpiece by burning them out. It is possible to do this without damaging the holes in the plates through which the rivets pass.

Flame piercing is used when the rivet shank cannot be removed because of poor alignment of the original holes in the mating plates. After piercing, use the oxygen stream to wash away the remaining rivet material. This method requires a high degree of skill and great care must be exercised.

Alternatively, use the cutting flame to wash a rivet head away. This leaves the rivet shank accessible to a punch and washed plates undamaged and unmarked. Merely punch the shank of the rivet out and the diameter of the hole in the plate remains unchanged. The rivet washing process has wide application when plates and rivet holes are to be reused.

Cutting Manganese Steel

Very high quality cut surfaces can be produced when MAPP gas is used to cut Hadfield's manganese (Mn) steel (approximately 13 percent manganese). With two important exceptions, cutting manganese steel is similar to cutting mild carbon steels. One, a preheat is required, and two, cutting oxygen pressure should be kept as& as possible. Without a preheat, and with too much oxygen pressure, a very rough, notched surface will result.

CAUTION: The preheat should be applied only along the line of cut since heating can destroy desirable

properties of this material. Do not preheat the entire piece since Hadfield's manganese steel becomes embrittled if heated above 500°F.

Preheating for hand cutting can be accomplished by using the torch to heat several inches ahead of the cut and then dropping back to make the cut. Preheating can also be performed with another torch.

For machine cutting, pre-heating is best accomplished by positioning the preheat torch about 3 in. ahead of the cutting tip. Use a cutting tip about the same size as the heating tip or use the MAPP H-O heating tip.

Select cutting tip size the same as when selecting tips for mild carbon steel. MAPP FS tips provide the best preheat pattern. Use only standard pressure tips since cutting oxygen pressure should be from 30-40 psig (pounds per square inch gauge).

Table 4-4 gives a few examples of the conditions used to obtain very high quality, slag free cuts with Hadfield's manganese steel.

TABLE 4-4. Hadfield's Manganese Steel Cutting Conditions

| Metal Thickness (inches) | Preheat Tip | cutting Tip | cutting Speed (ipm) |
|---|---|---|---|
| 7/16 | FS-56 | FS-61 | 30-32 |
| 3/4 | FS-56 | FS-54 | 23 |
| 3/4 | H-O | FS-54 | 25 |
| | Pressure (PSIG) | | |
| | MAPP Gas | Oxygen | |
| 7/16 | 7 | 30-40 | |
| 3/4 | 7 | 30-40 | |
| 3/4 | 7 | 30-40 | |

## OPERATION PROCEDURES - BULK-SYSTEMS

Start Up Procedure

Slowly open the globe valve located downstream from the regulator. This valve is opened slowly to prevent closing the excess flow valve in the tank. Turn on, electric power to the vaporizer.

Temporary Shutdown Procedure

Close the globe valve located downstream from the regulator.

Extended Shutdown Procedure

Close the globe valve located downstream from the regulator. Turn off electric power to vaporizer.

CAUTION: Only authorized trained personnel are to adjust the line pressure regulator and the pressure-temperature controls within the vaporizer.

## THE USE OF ANTIFREEZE IN FLASH-BACK ARRESTORS

There are some important points which should be emphasized with regard to the use of antifreeze in flashback arrestors. Use antifreeze with no water for all interior flashback arrestors. For flashback arrestors installed outdoors, use a solution of 90 percent single phase glycol-based antifreeze and 10 percent water. This will prevent freezing down to a temperature of -27°F.

The percentage of water in antifreeze should be kept to a minimum because water vapor is harmful to MAPP gas pipe lines (rust) and to MAPP gas flames (lower flame temperature).

A good grade, one phase glycol-based antifreeze should be used. The two phase (oil added) anti-freeze, such as Prestone, should not be used. Some single phase antifreezes are listed below:

(1) Weatherset Antifreeze& Summer Coolant

## THE USE OF ANTIFREEZE (Continued)

(2) Sentinel Antifreeze Coolant

(3) Factory replacement material

| | |
|---|---|
| Ford | -Fomoco or Rodunda |
| Chrysler | -Mopar |
| American | -Rambler |
| General Motors-G.M. | -1899M |

(4) Major Oil Company Products

Standard
Shell
Pure
Mobile
Other products not containing oil inhibitors

Antifreeze levels should be checked periodically, (three to six months) and changed as needed. Inspectors should check flash-back arrestors to look for signs of glycol foaming or frothing, the frost indication that antifreeze should be changed. Drain and refill antifreeze at regular intervals (two or three months) in large usage areas to prevent foam from getting into the pipeline or equipment.

## MAPP GAS AND COMPRESSED AIR BURNER

This burner, simple in design, is effective for bending rails, beams, and other steel.

Take a 4 in. pipe cap, thread a 1/2 in. pipe to its center, then (for aspirated air), drill 10 equally spaced 1/4 in. holes on a 2-7/8 in. diameter circle and 10 equally spaced 1/4 in. holes on a 3-3/4 in. diameter circle (Figure 4-5). Attach it to a burning skirt of 9 in. long, 4 in. diameter, Sch. 80 pipe. Make a No. 28 drill hole in the 1/2 in. pipe's cap for MAPP gas and compressed air. This set up should have a Y-connection with needle valves and reverse-flow checks for MAPP gas and oxygen.

Operating pressures: approximately 20 psig MAPP gas and 20 psig compressed air, Consumption: approximately 100 cfh MAPP gas with the burner adjusted to a high velocity roaring sound. An oxidizing flame should extend a short distance beyond the end of the burner.

By modifying this basic design, different size burners can be made for use with MAPP gas.

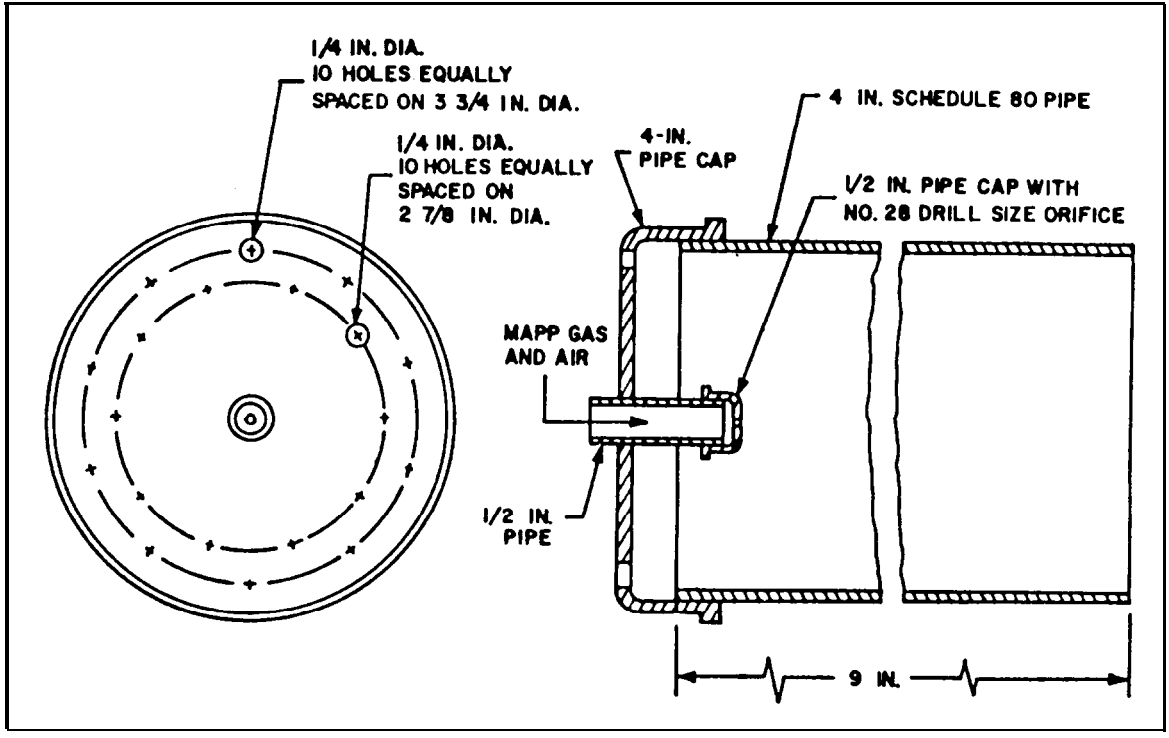


**FIGURE 4-5. MAPP Gas and Compressed Air Burner**

# NOTES

# NOTES

# NOTES

INDEX


| | Page |
|---|---|
| ASPHALT MIXERS AND PAVERS | 2-53 |
| Backhoe Sidecutters | 2-64 |
| Curbing Machine Augers | 2-63 |
| Grader Blades | 2-58 |
| Grader End Bits | 2-58 |
| Grapple Tines | 2-60 |
| Grid Compactors | 2-60 |
| Mixer Paddles | 2-53 |
| Mixer Paddle Shanks | 2-54 |
| Paving Agitator Blades | 2-55 |
| Paving Machine Paddles | 2-54 |
| Scooplift Buckets | 2-59 |
| Scraper Blades | 2-57 |
| Scraper Cutters and Sides | 2-56 |
| Sheepsfoot Tampers | 2-61 |
| Shredding Hammer | 2-66 |
| Trencher Teeth | 2-65 |
| AUGERS | 2-52, 2-63, 2-83, 2-85 |
| BUSHINGS, BONDING TO SHEET METAL | 3-6 |

Page

COMPRESSED AIR BURNER, AND MAPP GAS . . . . . 4-25

COUPLING DISTANCE . . . . . 4-15

CRACKS
Repairing Manganese Crusher Rolls . . . . . 2-76

CRUSHER ROLL SHELLS
Preventive Warpage . . . . . 2-68
Rebuilding Procedure . . . . . 2-72
Rebuilding Technique . . . . . 2-73
Wear Measure . . . . . 2-67
Welding Limits . . . . . 2-68

CRUSHING EQUIPMENT . . . . . 2-67

CRUSHING, GRINDING, AND SCREENING EQUIPMENT . . . . . 2-67
Cracked Maganese Rolls . . . . . 2-76
Crusher Roll Shells
Hardface . . . . . 2-67,2-71,2-72
Rebuild . . . . . .2-67. 2-72
Hard Facing (See HARD FACING)

Page

Rebuilding . . . . . 2-67.2-72
Rotor Type Impactors . . . . . 2-78
Rotors and Bars, Hardface . . . . . 2-79
Screen Grates, Hardface . . . . . 2-79
Welding Techniques . . . . . 2-73

DITCHERS . . . . . 2-49
Drive Segments . . . . . 2-49
Drive Sprockets . . . . . 2-50
Rolls . . . . . 2-50
Teeth . . . . . 2-51

EARTH-MOVING EQUIPMENT. . . . . 2-16

FLAME, PREHEAT CHARACTERISTICS . . . . . 4-14

GRINDING EQUIPMENT . . . . . 2-67

HARDFACING
Asphalt Mixer Paddle Shanks... . . . . 2-54
Asphalt Mixer Paddles. . . . . 2-53
Asphalt Mixer Scraper Blades. . . . . 2-57

Page

HARD FACING (Continued)
Backhoe Sidecutters . . . . . 2-64
Bulldozer Blades . . . . . 2-23
Bulldozer End Bits . . . . . 2-22
Cable Sheaves . . . . . 2-40
Clamshell Buckets . . . . . 2-43
Cross-Checking and Cracking Comparison . . . . . 2-12
Crusher Jaws . . . . . 2-80
Crusher Roller She's . . . . . 2-67
Curbing Machine Augers . . . . . 2-63
Ditcher Drive Segments . . . . . 2-49
Ditcher Drive Sprockets . . . . . 2-50
Ditcher Rolls . . . . . 2-50
Ditcher Teeth . . . . . 2-51
Dragline Chains . . . . . 2-41
Dragline Clevises . . . . . 2-42
Dragline Pins . . . . . 2-41
Drive Sprockets . . . . . 2-20
Elevator Bucket Lips . . . . . 2-84
Flame Adjustments . . . . . 2-15
Grader Blades . . . . . 2-58
Grader End Bits . . . . . 2-58

Page

HARD FACING (Continued)
Grapple Tines . . . . . 2-60
Gravel Washer Auger Flights . . . . . 2-83
Grid Compactor Grids . . . . . 2-60
Horizontal Travel Gear Teeth . . . . . 2-47
House Ring Gear Teeth . . . . . 2-48
Log Washer Paddles . . . . . 2-84
Paving Machine Agitator Blades . . . . . 2-55
Paving Machine Paddles . . . . . 2-54
Paving Machine Screw Conveyors . . . . . 2-55
Post Hole Augers . . . . . 2-52
Quarry Drill Collars and Augers . . . . . 2-85
Ripper Shanks . . . . . 2-24
Ripper Teeth . . . . . 2-21
Rock Rake Teeth . . . . . 2-25
Rotor-Type Impactors . . . . . 2-78
Scalping and Sizing Vibratory Screens . . . . . 2-82
Scooplift Bucket Lips . . . . . 2-59
Scraper Cutters and Sides . . . . . 2-56
Shafts . . . . . 2-48
Sheepsfoot Tampers . . . . . 2-61
Shovel and Dragline Buckets . . . . . 2-33

Page

HARD FACING (Continued)
Shovel Boom Heels . . . . . 2-39
Shovel Bucket Tooth Adapters. . . . . 2-35
Shovel Drive Tumblers . . . . . 2-30
Shovel House Rolls . . . . . 2-30
Shovel Idlers . . . . . 2-29
Shovel Latch Bars . . . . . 2-38
Shovel Latch Plates . . . . . 2-37
Shovel Ring Gear Teeth . . . . . 2-46
Shovel Rollers . . . . . 2-28
Shovel Teeth . . . . . 2-34
Shovel Teeth, Comparison of Hard-Facing Patterns . . . . . 2-36
Shovel Teeth, Waffle or Cross-Hatch . . . . . 2-34
Shovel Track Pads . . . . . 2-28
Shredding Hammers . . . . . 2-66
Techniques . . . . . 2-5
Top Carrier Rolls . . . . . 2-19
Track Rollers . . . . . 2-17
Tractor Grousers . . . . . 2-21
Tractor Idlers . . . . . 2-17
Tractor Rails . . . . . 2-18
Trencher Teeth . . . . . 2-65

Page

HEAVY CONSTRUCTION EQUIPMENT . . . . . 2-16

MAPP GAS . . . . . 4-1
Antifreeze in Flashback Arrestors . . . . . 4-24
Brazing . . . . . 4-4,4-9
Compressed Air Burner and MAPP Gas . . . . . 4-25
Cutting . . . . . 4-2, 4-11,4-20,4-21,4-22
Disadvantages . . . . . 4-1
Flame Cutting . . . . . 4-11
Coupling Distance . . . . . 4-15
Nature of the Workpiece . . . . . 4-17
Oxygen Pressure . . . . . 4-13
Oxygen Supply . . . . . 4-19
Preheat Flame Adjustment . . . . . 4-12
Starting a Cut . . . . . 4-20
Tip Size and Style . . . . . 4-19
Torch Angle . . . . . 4-16
Travel Speed . . . . . 4-17
Flame Hardening . . . . . 4-1o
Carbon Content and Hardness.. . . . . 4-1o
Flame Hardenable Materials.. . . . . 4-11
Flame Head Design . . . . . 4-11

Page

MAPP GAS (Continued)
Metallizing . . . . . 4-9
Operating Procedures -Bulk Systems . . . . . 4-24
Extended Shutdown Procedures . . . . . 4-24
Start Up Procedures . . . . . 4-24
Temporary Shutdown Procedure . . . . . 4-24
Performance . . . . . 4-1
Safety. . . . . 4-1
Welding
Fusion Welding . . . . . 4-8
Aluminum Welding . . . . . 4-9
Cast Iron Welding . . . . . 4-9
Carbon Steel Pipe Welding . . . . . 4-9
Carbon Steel Welding . . . . . 4-7
Copper Welding. . . . . 4-9
Flame Adjustment . . . . . 4-5
Welding and Brazing . . . . . 4-4
Welding Tips with MAPP Gas. . . . . 4-4
Welding or Cutting Unit . . . . . 4-2
Extinguishing the Torch . . . . . 4-3
Lighting the Torch . . . . . 4-3
Setting Up . . . . . 4-2

Page

MINING EQUIPMENT . . . . . .2-67, 2-80

MOLECULAR METAL . . . . . 3-1
ALLOY GP (M-41) . . . . . 3-2
Atomized Metallic Materials Kit. . . . . 3-1
Bonding . . . . . 3-2, 3-7, 3-12,3-16
Mixing . . . . . .3-3.3-7. 3-11, 3-15
RAPIDSTEEL (M-43 ) . . . . . 3-14
Repairing
Axles . . . . . 3-6
Bearing Housings . . . . . 3-6
Bushings . . . . . 3-6
Cams and Cam Followers . . . . . 3-6
Condenser Coils . . . . . 3-14
Damaged Castings . . . . . 3-2
Engine Blocks . . . . . 3-2
Foundations and Retaining Walls. . . . . 3-14
Fuel Tanks . . . . . 3-14
Gear Housings . . . . . 3-2
Guides . . . . . 3-6
Hydraulic Rams . . . . . 3-2
Keyways . . . . . 3-2

Page

MOLECULAR METAL (Continued)
Machine Ways . . . . . 3-6
Pipes . . . . . 3-14
Pipe Supports . . . . . 3-6
Pistons . . . . . 3-6
Plumbing Pipes and Fixtures.. . . . . 3-14
Radiators . . . . . 3-14
Shafts . . . . . .3-2. 3-6
Slides . . . . . 3-6
Surface Preparation . . . . . 3-3,3-7,3-11,3-15
Tanks . . . . . 3-14
Vessels . . . . . 3-14
Wear Pads . . . . . 3-6
Wetting . . . . . 3-4,3-8,3-13,3-17
SMOOTCOAT (M42) . . . . . 3-6
SMOOTHCOAT LIQUID (M-43 )..... . . . . 3-10

PIPES, JOINING DISSIMILAR DIAMETERS . . . . . 3-53

POST HOLE AUGERS . . . . . 2-52

POWER SHOVEL TRANSMISSION COMPONENTS . . . . . 2-45

Page

QUARRY AND MINING EQUIPMENT, OTHER . . . . . 2-80
Crusher Jaws . . . . . 2-80
Crusher Points . . . . . 2-82
Elevator Bucket Lips . . . . . 2-84
Gravel Washer Auger Flights . . . . . 2-83
Log Washer Paddles . . . . . 2-84
Quarry Drill Collars and Augers . . . . . 2-85
Vibratory Screen, Scalping and Sizing . . . . . 2-83
Wobbler Feeder . . . . . 2-82

QUARRY EQUIPMENT . . . . . 2-67,2-80

SCREENING EQUIPMENT . . . . . 2-67

SHOVEL PARTS AND ACCESSORIES. . . . . 2-27
Boom Heels . . . . . 2-39
Buckets, Clam Shell . . . . . 2-43
Cable Sheaves . . . . . 2-40
Clams Shell Buckets . . . . . 2-39
Bucket Tooth Adapters . . . . . 2-35
Dragline Buckets . . . . . 2-33
Dragline Chains . . . . . 2-42

Page

SHOVEL PARTS AND ACCESSORIES (Continued)
Dragline Clevis . . . . . 2-43
Dragline Pins . . . . . 2-41
Drive Tumblers . . . . . 2-30
House Rolls . . . . . 2-30
Idlers . . . . . 2-29
Latch Bars . . . . . 2-38
Latch Plates . . . . . 2-37
Rollers . . . . . 2-28
Teeth . . . . . 2-34
Track Pads . . . . . 2-28
Transmissions . . . . . 2-45
Horizontal Travel Gears . . . . . 2-47
House Rings . . . . . 2-48
Ring Gears . . . . . 2-46
Shafts . . . . . 2-48
Swing Gears . . . . . 2-47

STEPOVER TECHNIQUES . . . . . 2-71

TORCH ANGLES . . . . . 4-16

Page

TORCH TIP DESIGN, MAPP GAS. . . . . 4-5

TRACTOR PARTS AND ACCESSORIES . . . . . 2-16
Bulldozer Blades . . . . . 2-23
Bulldozer End Bits . . . . . 2-22
Drive Sprockets . . . . . 2-20
Ripper Shanks . . . . . 2-24
Ripper Teeth . . . . . 2-21
Rock Rake . . . . . 2-25
Top Carrier Rolls . . . . . 2-19
Tractor Grousers . . . . . 2-21
Tractor Idlers . . . . . 2-17
Tractor Rails . . . . . 2-18
Tractor Rollers . . . . . 2-17

WEARFACING . . . . . 2-1
Abrasion Wear . . . . . 2-11
Amperage . . . . . 2-12
Base Metals . . . . . 2-3
Buildup Materials . . . . . 2-3
Cast Iron Welding . . . . . 2-3
Corrosion Wear . . . . . 2-12

Page

WEARFACING (Continued)
Cracking . . . . . 2-12
Cross-Checking . . . . . 2-12
Flame Adjustments . . . . . 2-15
Hard-Facing/Deposits . . . . . 2-4
Hard-Facing/Oxy-MAPP . . . . . 2-13
Heat Wear . . . . . 2-11
Impact Wear . . . . . 2-11
Polarity . . . . . 2-12
Types of Wear . . . . . 2-11
Abrasion . . . . . 2-11
Corrosion . . . . . 2-12
Heat . . . . . 2-11
Impact . . . . . 2-11
Welding on Cast Iron . . . . . 2-3
Workpiece Positioning . . . . . 2-4
WorkPiece Preparation . . . . . 2-1

WELDING MATERIALS . . . . . 1-1
Aluminum . . . . . 1-16, 1-17
Application Guides . . . . . 1-34
Brazing . . . . . 1-7,1-9,1-10

Page

WELDING MATERIALS (Continued)
Buildup . . . . . 1-21
Cast Iron . . . . . 1-1, 1-12, 1-13, 1-14
Chamfering . . . . . .1-27
Gouging . . . . . .. .1-27
Graphite . . . . . 1-28
Holding and Heat Resisting . . . . . 1-32
Mild Steel . . . . . ... 1-1, 1-2
Overlay . . . . . 1-22, 1-25, 1-26
Silver Brazing . . . . . 1-10
Solder . . . . . 1-29, l-25,1-26
Stainless . . . . . 1-20
Steel . . . . . l-3, 1-4, 1-5, 1-6,1-8
Surface Hardening . . . . . 1-33
zinc . . . . . 1-19

WOBBLER FEEDERS, RESTORING WORN AREAS . . . . . 2-82