INCH-POUND

MIL-HDBK-1025/10
1 DECEMBER 1998

SUPERSEDING
NAVFAC P-1060
DATED JULY 1990

DEPARTMENT OF DEFENSE
HANDBOOK

SAFETY OF ELECTRICAL TRANSMISSION AND DISTRIBUTION SYSTEMS

AMSC N/A AREA FACR

DISTRIBUTION STATEMENT A. Approved for public release; distribution is unlimited.

FOREWORD

This handbook is approved for use by the Department of the Navy and is available for use by all Departments and Agencies of the Department of Defense.

This handbook has been developed from selection of the best safety practices of the Naval Facilities Engineering Command (NAVFACENGCOM), other Government agencies, and the private sector. This handbook was prepared using, to the maximum extent feasible, national professional society, association, and institute standards. Deviations from this criteria cannot be made without prior approval of NAVFACENGCOM Criteria Office. This handbook is for guidance only. This handbook cannot be cited as a requirement. If it is, the Contractor does not have to comply.

Beneficial comments (recommendations, additions, deletions) and any pertinent data that may be of use in improving this document should be addressed to: Commander, Attention NAVFAC Criteria Office, Naval Facilities Engineering Command, 1510 Gilbert Street, Norfolk, VA 23511-2699.

DO NOT USE THIS HANDBOOK AS A REFERENCE IN A PROCUREMENT DOCUMENT FOR FACILITIES CONSTRUCTION. IT IS TO BE USED IN THE PURCHASE AND PREPARATION OF FACILITIES PLANNING AND ENGINEERING STUDIES AND DESIGN DOCUMENTS USED FOR THE PROCUREMENT OF FACILITIES CONSTRUCTION (SCOPE, BASIS OF DESIGN, TECHNICAL REQUIREMENTS, PLANS, SPECIFICATIONS, COST ESTIMATES, REQUEST FOR PROPOSALS, AND INVITATION FOR BIDS). DO NOT REFERENCE IT IN MILITARY OR FEDERAL SPECIFICATIONS OR OTHER PROCUREMENT DOCUMENTS.

CONTENTS

PAGE

Section 1 **INTRODUCTION**
1.1 Scope 1
1.2 Cancellation 1
1.3 Handbook Presentation 1
1.3.1 Tabular Method 1
1.3.2 Nontabular Method 1
1.3.3 Warnings, Cautions, and Notes 1
1.4 Handbook Content 2
1.4.1 Applicable Documents 2
1.4.2 Definitions 2
1.4.3 General Safety Practices 2
1.4.4 Work on De-energized or Energized Line Safety Requirements 2
1.4.5 Substations and Switchgear 2
1.4.6 Overhead Lines and Associated Electrical Components 2
1.4.7 Underground Cables, Structures, and Associated Electrical Components 2
1.4.8 Shore-to-Ship Electrical Power Connections 2

Section 2 **APPLICABLE DOCUMENTS**
2.1 General 3
2.2 Government Documents 3
2.3 Nongovernment Publications 3

Section 3 **DEFINITIONS**
3.1 Abbreviations and Acronyms Used in This Handbook 5
3.2 Definitions 6

Section 4 **GENERAL SAFETY PRACTICES**
4.1 Safety 7
4.1.1 Use 7
4.1.2 Construction 7
4.1.3 Qualifying Personnel 7
4.1.4 Application 7
4.1.5 Unique Requirements 7
4.2 Job Hazards 7
4.2.1 Accessibility 7
4.2.1.1 Inside Work 7
4.2.1.2 At Grade Work 7
4.2.1.3 Aerial Work 8
4.2.1.4 Underground Work 8

PAGE

4.2.2 Work Area Protection 8
4.2.3 Normal Environmental Impacts 8
4.2.3.1 Work in Elevated Positions or Near Waterways 8
4.2.3.2 Work in Confined or Enclosed Spaces 8
4.2.3.3 Noise Control 8
4.2.3.4 Lighting 8
4.2.4 Hazardous Environmental Impacts 8
4.2.4.1 Asbestos 9
4.2.4.2 Polychlorinated Biphenyls (PCB) 9
4.2.4.3 Sulfur Hexafluoride (SF_6) 9
4.2.4.4 Wood Product Preservative Treatments 9
4.2.5 Explosive or Hazardous Vapors 9
4.3 Reminder of Electrical Hazards in the Field 10
4.3.1 Dangers From Electric Shock 10
4.3.2 Danger From Arcs and Blasts 11
4.4 Protection Against Hazards 11
4.4.1 General Body Protection 11
4.4.2 Safety Equipment and Tools 14
4.4.2.1 Rubber Protective Equipment 14
4.4.2.2 Plastic Guard Equipment 14
4.4.2.3 Live-Line Tools 14
4.4.2.4 Other Safety Requirements 15
4.5 General Safety Observances 15
4.6 Worker/Crew Responsibilities 15
4.6.1 Levels of Responsibility 15
4.6.2 Qualifications 15
4.6.2.1 Qualified Workers 15
4.6.2.2 Unqualified Workers 15
4.6.3 Mishap Handling 16
4.6.3.1 Knowing What To Do 16
4.6.3.2 Work Injuries and Mishap Reports 18
4.6.3.3 Rescue Operations 18
4.7 Lockout/Tagout/Tryout of Hazardous Energy Sources 18
4.8 Training 19
4.8.1 Programs 20
4.8.2 Standard Operating Procedures/Job Hazard Analysis 22

Section 5 **WORK ON DE-ENERGIZED OR ENERGIZED LINE SAFETY REQUIREMENTS**
5.1 Electrical Aspects Affecting Safety 23

..... **PAGE**
5.1.1 Safe Working Distances 23
5.1.2 Work Methods in Relation To Worker's Safety 25
5.1.2.1 De-energized Electrical Line Work 25
5.1.2.2 Energized Electrical Line Work 25
5.1.2.3 Number of Qualified Workers Per Hazard Exposure 26
5.1.3 Verifying Electrical Systems and Equipment Provisions 27
5.1.4 Safety Hazard Detection Devices 27
5.1.4.1 Potential Differences 28
5.1.4.2 Phasing Testers 28
5.1.4.3 Combustible Gas/Oxygen Detectors 28
5.1.4.4 Aerial-Lift Bucket Truck Leakage-Current Monitoring 28
5.2 De-energized Line Work Prescheduling 28
5.2.1 Preparation Responsibility 29
5.2.2 Safety Basics 29
5.2.2.1 Hazardous Energy Elimination 29
5.2.2.2 Lockout/Tagout/Tryout Instructions 30
5.2.2.3 Lock and Tag Color Coding 31
5.3 Grounding Provisions 31
5.3.1 Why Temporary Grounds are Necessary 32
5.3.2 Equipotential (Single Point) Grounding 32
5.3.3 Placement of Grounds 33
5.3.3.1 Approach Distances 33
5.3.3.2 Potential Differences 33
5.3.4 Temporary Grounding System Components 34
5.3.4.1 Grounding Clamps 34
5.3.4.2 Grounding Cable 34
5.3.4.3 Grounding Ferrules 35
5.3.4.4 Grounding Cluster Bars 35
5.3.5 Temporary Grounding of Aerial Lines 36
5.3.6 Temporary Grounding of Substation Current-Carrying Equipment Components 36
5.3.7 Aerial Lift Truck Vehicle Grounding 39
5.3.8 Temporary Grounding of Underground Lines 40
5.3.9 Opening or Splicing De-energized Conductors 40
5.3.10 Grounding for Stringing and Removing Lines 41
5.4 Energized Electrical Line Work 43
5.4.1 Permitted Electrical Line Work Methods 43
5.4.2 Voltage Levels and Approved Work Methods and Equipment 43
5.4.2.1 Rubber Goods 44
5.4.2.2 Insulating Tools 44

..... **PAGE**
5.4.2.3 Insulating Guards 45
5.4.3 Prework Procedures 46
5.4.4 General Job-in-Progress Procedures 47

Section 6 **SUBSTATIONS AND SWITCHGEAR**
6.1 System Familiarity 49
6.1.1 Diagrams and Schematics 49
6.1.2 Engineering Guidance 49
6.1.3 System Operation 49
6.1.3.1 Protective Devices 49
6.1.3.2 Alarms 49
6.1.3.3 Interlocking 49
6.1.4 Abnormal Conditions 50
6.1.5 Defective Equipment 50
6.2 Substation Work Area Control 50
6.2.1 Previsit Briefing 50
6.2.2 Clearance Access 51
6.2.3 De-energizing Work Areas 51
6.2.3.1 Switching 51
6.2.3.2 Lockout/Tagout/Tryout 51
6.2.3.3 Barriers and Barricade Tape 51
6.2.3.4 De-energizing Proof Testing 52
6.2.3.5 Work Area Grounding 52
6.2.3.6 Adjacent Energized Equipment Protection 52
6.2.3.7 Worker Protection 52
6.2.4 Working Area Housekeeping Checks 52
6.2.5 Installation Precautions 53
6.3 Checklist for Safety 53
6.3.1 Communication Channel Availability 53
6.3.2 Lighting Level 53
6.3.3 Working Period 53
6.3.4 Personnel Requirements 53
6.3.5 Equipment Preparation 53
6.4 Testing Safety 53
6.5 Switching Safety 54
6.5.1 Air Switches 54
6.5.1.1 Disconnect Switches 54
6.5.1.2 Airbreak Switches 55
6.5.1.3 Interrupter Switches 55
6.5.1.4 Inching 56

..... **PAGE**
6.5.2 Oil Switches 56
6.5.3 Similar Switching Sections 56
6.6 Fusing Safety 56
6.6.1 Fuse Handling 56
6.6.2 Operation of Energized Fuses 56
6.6.3 Open Fuse Holder 57
6.6.4 Closed-Position Fuse Locking 57
6.6.5 Bypassing 57
6.7 Energy-Storing Protective Device Safety 57
6.7.1 Surge Arresters 57
6.7.1.1 Surge Arrester Contact 57
6.7.1.2 Disconnecting Surge Arresters 57
6.7.2 Choke Coils 58
6.7.3 Capacitors 58
6.7.3.1 Capacitor Discharge Circuits 58
6.7.3.2 Coupling Capacitors 58
6.8 Instrument Transformer Safety 58
6.8.1 Voltage (Potential) Transformers 59
6.8.1.1 Fuse Replacement 59
6.8.1.2 Supervisory Requirements 59
6.8.2 Current Transformers 60
6.8.2.1 Circuit Opening 60
6.9 Power Transformer and Regulator Safety 60
6.9.1 Power Transformers 60
6.9.2 Voltage Regulators 61
6.10 Metal Clad Switchgear Safety 61
6.10.1 Before Circuit Breaker Drawout Requirements 61
6.10.2 Circuit Breaker Maintenance 62
6.10.3 Safety Precautions After Circuit Breaker Maintenance 62
6.11 Network Protector Safety 62
6.11.1 Closing Network Protectors 63
6.11.2 Network Protector Maintenance Safety 63
6.11.3 After Network Protector Maintenance 64
6.12 Storage Battery Safety 64
6.13 Requirements for Safely Phasing or Connecting of Circuits 65

Section 7 **OVERHEAD LINES AND ASSOCIATED ELECTRICAL COMPONENTS**
7.1 Pole Line Work Environment 66

..... **PAGE**
7.2 Aerial Lifts 66
7.2.1 Operation of Aerial Lift Equipment Near Energized Electrical Facilities 67
7.2.2 Types of Aerial Lifts 67
7.2.3 Aerial Lift Manufacturing Requirements 67
7.2.4 Aerial Lift Safety 68
7.2.5 Other Aerial Lift Requirements 69
7.2.6 Bucket Safety Precautions 70
7.2.7 Insulated Buckets 71
7.2.8 Aerial Lift Maintenance 71
7.3 Pole Handling Operations 72
7.3.1 Direction of Aerial Lift for Installations 72
7.3.2 Pole Contact Precautions 72
7.3.3 Facility Receipt 72
7.3.4 Ground Handling 73
7.3.5 Temporary Pole Storage 74
7.3.6 Hauling Poles 74
7.4 Pole Installation Requirements 75
7.4.1 Pole Holes 75
7.4.2 Digging Holes 75
7.4.3 Hole Covers 75
7.4.4 Setting Poles 76
7.4.4.1 Pike Pole Method 76
7.4.4.2 Winch Line Method 77
7.4.4.3 Gin Pole Method 78
7.4.4.4 Pole Setting Truck Precautions 78
7.4.4.5 Energized Line Precautions 78
7.4.4.6 Backfilling Around Poles 79
7.5 Dismantling Poles 79
7.5.1 Minimum Pole Support 79
7.5.2 Additional Pole Support 79
7.5.3 Truck Restraining 79
7.5.4 Pole Removal 80
7.6 Climbing and Working on Poles 80
7.6.1 Before Climbing Precautions 80
7.6.2 Type of Pole 81
7.7 Pole Climbing Equipment 81
7.7.1 Climbing Safety Equipment 82
7.7.2 Wood-Pole Climbing Equipment 82
7.7.2.1 Climber Requirements 83
7.7.2.2 Climber Defects 83

PAGE

7.7.2.3 Leather Treatment 83
7.7.2.4 Storing Climbing Equipment 84
7.7.2.5 Conditioning Climbing Equipment 84
7.7.2.6 Prohibited Climber Wearing Areas 85
7.7.3 Concrete/Steel Pole Climbing 85
7.7.3.1 Fall Arresting Device Considerations 85
7.7.3.2 Fall Arresting Anchor Point 85
7.7.3.3 Fall Arresting System Provisions 86
7.7.3.4 Climbers' Tools 86
7.8 Pole Climbing and Work Precautions 86
7.8.1 More Than One Climber 86
7.8.2 Wood-Pole Climbing Precautions 86
7.8.3 Concrete/Steel Pole or Tower Climbing Precautions 87
7.8.4 General Pole Climbing Precautions 87
7.8.5 Precautions While Working on Poles 88
7.8.6 Materials Precautions While Working on Poles 89
7.9 Crossing Pole Structures 89
7.9.1 Crossing Open Air Switches on Poles 90
7.9.2 Balancing Support on Pole Structures 90
7.9.3 Climbing H-frame Pole Structures 90
7.10 Stringing or Removing De-Energized Conductors 90
7.10.1 Line Work Precautions 90
7.10.1.1 Adjacent to Energized Lines 90
7.10.1.2 Over, Under, or Across Energized Lines 91
7.10.2 Other Work Precautions Affecting Aerial Lines 91
7.10.2.1 Fallen Wires 91
7.10.2.2 Fire 91
7.10.2.3 Vehicular Protection 91
7.10.3 De-Energized Line Grounding 91
7.10.3.1 Permanent Ground Wires 91
7.10.3.2 Common Neutral Systems 92
7.10.3.3 Protective Grounding Equipment 92
7.10.4 Handling and Stringing Guidance 92
7.10.4.1 Reels 92
7.10.4.2 Conductors 92
7.10.4.3 Conductor Grounding 92
7.10.5 Primary Line Installation 92
7.10.5.1 Stringing Primary Line Wires 93
7.10.5.2 Clipping In or Tieing Primary Line Wires 93
7.10.6 Secondary Line Installation 93

..... **PAGE**
7.10.6.1 Stringing Secondary Line Wires 94
7.10.6.2 Protecting Secondary Lines 94
7.10.7 Removing Lines 94
7.10.8 Guying 95
7.10.8.1 Guy Installation 95
7.10.8.2 Removal of Guys 96
7.10.9 Insulators 96
7.11 Street Lighting 96
7.11.1 Street Lighting Precautions 96
7.11.2 Multiple Street Lighting Circuits 96
7.11.3 Series Street Lighting Circuits 96
7.11.4 Climbing Space 97
7.11.5 Time Switches 97
7.12 Working On or Around Pole-Mounted Equipment 97
7.12.1 Aerial Surge Arresters 97
7.12.2 Aerial Switches and Fuses 97
7.12.3 Aerial Capacitors 97
7.12.4 Aerial Power Transformers and Voltage Regulators 97
7.12.4.1 Aerial Energized Work 98
7.12.4.2 Aerial Installation 98
7.12.4.3 Aerial Connection 98
7.12.4.4 Aerial Inspection and Maintenance 99
7.12.4.5 Aerial Fusing 99
7.12.4.6 Aerial Service Connections 99
7.12.4.7 Aerial Testing 100
7.13. Tree Trimming and Brush Removal 100
7.13.1 Tree Trimming Training Qualifications 100
7.13.2 Tree Trimming Public Safety 100
7.13.3 Tree Trimming Tool Safety 100
7.13.4 Working On Trees Near Energized Lines 101
7.13.5 Climbing and Working On Trees 101
7.13.5.1 Tree Climbers 101
7.13.5.2 Tree Work 101
7.13.6 Power Trimming Equipment 102
7.13.6.1 Operating Power Trimming Equipment 102
7.13.6.2 Chain Saws 103
7.13.6.3 Right-of-Way Brush Removal 103

..... **PAGE**

Section 8 **UNDERGROUND CABLES, STRUCTURES, AND ASSOCIATED ELECTRICAL COMPONENTS**

8.1 Underground Work 105
8.2 Underground Work Area Protection 105
8.2.1 Underground Work Area Protection Methods 105
8.2.2 Impact of Vehicular Traffic Flow 105
8.2.3 Work Space Considerations 105
8.2.4 Barricades and Warning Precautions 105
8.2.4.1 Devices 106
8.2.4.2 Flagmen 106
8.2.4.3 Barriers and Barricade Tape 106
8.2.4.4 Caution and Danger Signs 107
8.2.4.5 Manhole Work Areas 107
8.2.4.6 Excavation, Trenching, and Backfilling 107
8.2.4.7 Cable Pulling Protection 109
8.3 Existing Obstruction Protection 109
8.3.1 Locating Buried Facilities 109
8.3.2 Direct-Burial Electrical Cable Work 109
8.3.3 Digging Restriction 110
8.3.4 Handling Damage To Existing Utility Lines 110
8.4 Excavation Practices and Procedures for Damage Prevention 111
8.4.1 Preplanning of the Excavation Project 111
8.4.2 All Projects Preplanning 111
8.4.3 Large Project Preplanning 111
8.4.4 On the Job Site Procedures 111
8.4.5 Excavating in Areas of Utility Locations 112
8.4.6 Backfilling in Areas of Utility Locations 113
8.4.7 If Damage Does Occur to Existing Utilities 113
8.4.8 Accountability for Excavator Error 114
8.5 Preparation for Work in Underground Structures 114
8.5.1 Removing a Manhole Cover 114
8.5.2 Testing Before Entering Underground Structures 117
8.5.2.1 Hazardous Conditions in Underground Structures 117
8.5.2.2 Testers for Underground Structures 117
8.5.2.3 Elimination of Combustible or Toxic Gases 118
8.5.2.4 Structure Condition Change Retesting Requirements 119
8.5.2.5 Emergency Entrance Into Underground Structures 119
8.5.3 Ventilation of Underground Structures 119
8.5.3.1 Forced Air 119
8.5.3.2 Sail Method 119
8.5.3.3 Natural Method 119

..... **PAGE**
8.6 Work Inside Underground Structures 120
8.6.1 General Inside Structure Safety 120
8.6.2 Precautions Before De-Energizing Underground Lines 121
8.6.3 De-energizing Underground Cables and Equipment 122
8.6.3.1 Isolation of Underground Lines…..……122
8.6.3.2 Underground Cable and Equipment Grounding 122
8.6.4 Requirements for Working on Underground Cables and Apparatus 122
8.6.4.1 Underground De-energized Work 122
8.6.4.2 Protection Against Energized Parts 122
8.6.4.3 Underground Working Procedures…….123
8.6.4.4 Grounding Switch Operation 123
8.6.5 Cutting of Underground Cables 124
8.7 Heating Materials 125
8.7.1 Eliminating Heating Material Hazards 125
8.7.2 Heating Materials Work Precautions 125

Section 9 **SHORE-TO-SHIP ELECTRICAL POWER CONNECTIONS**
9.1 Connect/Disconnect Performance Responsibilities 127
9.2 Ship's Main Electrical Service Components 127
9.2.1 Shore Medium-Voltage Distribution System 128
9.2.2 Pier Substations 128
9.2.3 Ship-to-Shore Pier Electrical Outlet Assemblies 128
9.2.4 Ship-to-Shore Power Cables and Connectors 128
9.3 Relation of Ship's Electrical Service Components 134
9.3.1 Equipment Physical Relationships 134
9.3.2 Electrical Circuit Arrangement 134
9.3.2.1 General Electrical System Safety 134
9.3.2.2 Specific Shore-to-Ship Electrical System Safety 135
9.4 Unusual shore-to-Ship System Hazards 136
9.4.1 Split Personnel Responsibilities 137
9.4.2 Portable Power Cable and Outlet Safety Assurance 137
9.4.3 Electrical Equipment Accessibility and Working Space 137
9.4.3.1 Readily Accessible 137
9.4.3.2 Working Space 138
9.4.4 Ship's Electrical Power Input Safety 138
9.4.5 Parallel Operation 139
9.5 Supporting Shore-to-Ship Safety Requirements 139
9.5.1 Specialized Shore-to-Ship System Training 139
9.5.2 Specific SOP's 139
9.5.2.1 SOP Preparation Responsibility 139
9.5.2.2 Specific Organization Requirements 140

..... **PAGE**
9.5.2.3 Priorities 140
9.5.2.4 Normal Procedures 143
9.5.2.5 Emergency Procedures 143
9.6 Portable Shore Power Cables and Receptacles 143
9.6.1 Low-Voltage (480-Volt) Power Cable Specification 143
9.6.2 Medium-Voltage (4,160-Volt) Power Cable Specification 144
9.6.3 Power Cable-in-Use Insulation Resistance Values 144
9.6.3.1 Shore Criteria for Cable Assemblies 144
9.6.3.2 Ship Criteria for 480-Volt Service Cable 144
9.6.3.3 Explanation of Criteria Differences 144
9.6.4 Low-Voltage Receptacles, Plugs, and Protective Circuit Breakers 144
9.6.4.1 Shipboard Connection 144
9.6.4.2 Pier Low-Voltage (480-Volt) Electrical Outlet Assemblies 145
9.6.4.3 Low-Voltage (480-Volt) Receptacle Protective Circuit Breakers 145
9.6.5 Medium-Voltage (4,160-Volt) Receptacles, Plugs, and Protective Circuit Breakers 145
9.6.5.1 Shipboard Connections 146
9.6.5.2 Pier Medium-Voltage (4,160-Volt) Electrical Outlet Assemblies 146
9.6.5.3 Medium-Voltage (4,160-Volt) Receptacle Protective Circuit Breakers 146
9.7 Ship Connection Procedures Before Ship Docks 146
9.7.1 Laying, Inspecting, and Testing Power Cable Assemblies 147
9.7.1.1 Laying Power Cable Assemblies 147
9.7.1.2 Moving Power Cable Assemblies on Pier 147
9.7.1.3 Inspecting and Testing Power Cable Assemblies 148
9.7.2 Checking Shore Receptacles 149
9.7.2.1 Inserting Cable Plugs Into Receptacles 150
9.8 Shore-to-Ship Power Cable Rigging After Ship Docks 151
9.9 Ship's Transfer to Shore Power 151
9.10 Ship's Transfer Back to the Ship's Generator 151
9.11 Shores Disconnection of Cable Plugs and Removal of Cable Assemblies 152

FIGURES

Figure 1 Ground Potential Gradient 10
2 Current Path Flow 10
3 Current Single-Point Ground 36
4 Incorrect Multipoint Ground 36
5 Substation Temporary Grounding 37

PAGE

6 Insulated and Uninsulated Aerial Lift Vehicle Grounding Connections... 39
7 Using a Conductive or Insulating Platform for Opening/Closing De-Energized Overhead Conductors ... 41
8 Composite Stringing/Removing the Temporary Protective Grounds on Overhead Conductor Lines ... 42
9 Pike Pole Method ... 76
10 Winch Line Method ... 77
11 Steps in Removing a Manhole Cover ... 115
12 Sail Method of Manhole Ventilation ... 120
13 Shore-to-Ship Portable Power Cable Location Diagram ... 134
14 Preferred Ship-to-Shore Circuit Arrangement ... 135
15 Procedures in Safely Energizing a Ship From a Shore Electrical Circuit ... 136
16 Low-Voltage (480-Volt) Shore Receptacle ... 145
17 Medium-Voltage Shore Receptacle ... 146

TABLES

Table 1 Effects of 60-Hertz Current on Humans ... 11
2 Apparel and Body Protection Requirements ... 12
3 ASTM F 18 Rubber Goods ... 14
4 General Safety Observances ... 16
5 Significant Unsafe Actions and Conditions ... 17
6 Levels of Safety Accountability ... 17
7 Knowing What To Do ... 18
8 Lockout/Tagout/Tryout Control Program Development ... 19
9 Required Training ... 21
10 SOP/JHA Procedures ... 22
11 Qualified Worker Minimum Working Distances ... 24
12 Unqualified Worker Minimum Approach Distances ... 25
13 Jobs Requiring Two Electrical Workers ... 26
14 Jobs Working in Confined Spaces Requiring Additional Workers ... 26
15 Jobs Generally Acceptable for One Electrical Worker ... 27
16 Switching Order Outage Package Documents ... 29
17 Hazardous Energy Control ... 30
18 Sequence of Lockout/Tagout/Tryout Steps ... 30
19 Tag Requirements ... 31
20 Causes of Hazardous Induced Potential Differences ... 32
21 Temporary Grounding Connection/Removal Procedures ... 33
22 Maximum Fault Current Capability for Grounding Cables ... 35

PAGE

23 Temporary Ground Rod Minimum Requirements 35
24 Substation Protective Grounding Procedure 37
25 Grounding of Substation Equipment..... 38
26 Grounding of Equipment During Oil Handling..... 39
27 Procedures for Grounding Insulated and Uninsulated Aerial Lift Trucks 40
28 Stringing/Removing Conductor Ground Locations 41
29 Conductor Ground Location After Pulling..... 42
30 Categories of Electrical Line Maintenance Work 43
31 Approved Energized Work Methods by Voltage Class 44
32 Insulating Tools for Electrical Workers 45
33 Common Classification for Plastic Guards 45
34 Insulating Plastic Guards/Platforms for Electrical Workers 46
35 Prework Procedures..... 46
36 Energized Work Precautions 47
37 Voltage Level Work Procedures..... 47
38 Average Size of Crew Required to Raise Poles of Different Lengths by Piking..... 77
39 Shore-to-Ship Electrical Connect Responsibilities..... 127
40 Shore-to-Ship Electrical Disconnect Responsibilities 127

PICTURES **PAGE**

A. Electrical Connection Outlet Assembly With a 15-kV Receptacle 129
B Inside a Pier Vault Housing a Substation 129
C A Skid-Mounted Substation 130
D A Skid-Mounted Substation With Camlock Connections 130
E A 480-Volt Pier Electrical Outlet Assembly Without Cable Connections..... 131
F A 4.16-kV Pier Electrical Outlet Assembly and Outlets 131
G A 480-Volt Pier Electrical Outlet Assembly And Cable Connections..... 132
H A 480-Volt Shore-Cable to Ship-Cable Splice Connection in Place..... 132
I A 480-Volt Shore-Cable to Ship-Cable With Camlock Connection 133
J A 480-Volt Shore-Cable to Ship-Cable Plug and Receptacle Connection in Place 133
K A Cable Being Reeled by a Boom Truck..... 141
L Cable Protection Safety Barricades..... 142
M Effective Vault Rescue 142

INDEX ……..153

(THIS PAGE INTENTIONALLY LEFT BLANK)

Section 1. INTRODUCTION

1.1 **Scope.** This handbook is directed to the safety concerns of operators, electricians, and supervisors who perform and supervise operation and maintenance work on electrical transmission and distribution systems. This handbook is for guidance only. This handbook cannot be cited as a requirement. If it is, the Contractor does not have to comply.

1.2 **Cancellation.** This handbook cancels and supersedes NAVFAC P-1060, Electrical Transmission and Distribution Safety Manual, of July 1990.

1.3 **Handbook Presentation.** This handbook presents safety concerns in two ways.

1.3.1 **Tabular Method.** Worker concerns dealing with safe and unsafe practices both to general hazards and electrical hazards applying to de-energized and energized line work are considered best covered by summarizing them as tabular lists or rules. The tables remind the worker of general actions that apply to the normal conduct of electrical service work and are intended to indicate necessary instructions in a simplified manner or standard operating procedures (SOP's).

1.3.2 **Nontabular Method.** Worker concerns dealing with safe and unsafe practices on the specific hazards applying to the type and location of equipment and lines (such as substations and aerial and underground systems) are considered best covered by providing expanded instructions. Instructions are intended to clarify facilities SOP's or to provide a basis for generating a job hazard analysis (JHA).

1.3.3 **Warnings, Cautions, and Notes.** The following definitions apply to "Warnings," "Cautions," and "Notes" found throughout the handbook.

WARNING

An operating procedure, practice, or condition, etc., that may result in injury or death if not carefully observed or followed.

CAUTION

An operating procedure, practice, or condition, etc., that may result in damage to equipment if not carefully observed or followed.

Note

An operating procedure, practice, or condition, etc., that is essential to emphasize.

1.4 **Handbook Content.** A brief description of the contents of each section is presented below.

1.4.1 **Applicable Documents.** Section 2 lists the documents that form a part of this handbook to the extent referenced.

1.4.2 **Definitions.** Section 3 lists abbreviations and acronyms used in this handbook.

1.4.3 **General Safety Practices.** Section 4 covers general safety observances and hazards associated with electrical work.

1.4.4 **Work on De-energized or Energized Line Safety Requirements.** Section 5 covers the electrical aspects affecting safety dependent upon the energy hazard.

1.4.5 **Substations and Switchgear.** Section 6 covers the specifics for equipment found or used in substations including medium-voltage switchgear.

1.4.6 **Overhead Lines and Associated Electrical Components.** Section 7 covers the specifics for poles and structures and the aerial lines they support along with their necessary pole-mounted equipment. Such specifics cover pole handling and erection, climbing and working on poles, stringing of lines, working requirements around pole-mounted lighting, equipment and tool handling, and tree and brush trimming required for foliage that impinges upon aerial line right-of-ways.

1.4.7 **Underground Cables, Structures, and Associated Electrical Components.** Section 8 covers the specifics for manholes, vaults, and handholes; duct lines and trenches; cables; and ground-mounted and underground equipment associated with underground electrical lines.

1.4.8 **Shore-to-Ship Electrical Power Connections.** Section 9 covers the general safety hazards and specific procedures affecting safety for connecting electrical service cable assemblies from shore power receptacles to supply the ship’s electrical bus.

Section 2. APPLICABLE DOCUMENTS

2.1 **General.** The documents listed below are not necessarily all of the documents referenced herein, but are the ones that are needed to fully understand the information provided by this handbook. Other documents have the titles listed after their reference and if they are listed more than once are included in the listing below.

2.2 **Government Documents.** Unless otherwise indicated, copies of federal and military specifications, standards, and handbooks are available from the Standardization Documents Order Desk (ATTN: DSP), 700 Robbins Avenue, Building 4D, Philadelphia, PA 19111-5094.

CODE OF FEDERAL REGULATIONS (CFR)

29 CFR 1910 – Occupational Safety and Health, General Industry Standards.
29 CFR 1926 – Occupational Safety and Health, Safety and Health Regulations for Construction.

DEPARTMENT OF THE NAVY

NAVFAC 11300.37	Energy and Utilities Policy Manual
NAVFAC 5100.11	NAVFACENGCOM Safety and Health Program.
OPNAV 11310.3	Operation and Maintenance of Shore-to-Ship Power
OPNAVINST 5100.23	Navy Occupational Safety and Health (NAVOSH) Program Manual
OPNAVINST 5100.24	Navy System Safety Program
OPNAV P-45-117-6-98	Electrical Safety Field Guide

2.3 **Nongovernment Publications.** Application for copies should be addressed to the name and address given for the source.

AMERICAN NATIONAL STANDARDS INSTITUTE (ANSI)
West 42nd Street, New York, NY 10036
ANSI C2 – National Electrical Safety Code (NESC)

AMERICAN SOCIETY FOR TESTING AND MATERIALS (ASTM)
1916 Race Street, Philadelphia, PA 19103-1187
ASTM F 18-Series – ASTM Standard on Electrical Protective Equipment for Workers.

NATIONAL FIRE PROTECTION ASSOCIATION (NFPA)
One Batterymarch Park, P.O. Box 9101, Quincy, MA 02269-9101
NFPA 70 – National Electrical Code (NEC).

Section 3. DEFINITIONS

3.1 Abbreviations and Acronyms Used in This Handbook

a. ANSI - American National Standards Institute

b. ASTM - American Society for Testing and Materials

c. AWG - American Wire Gage

d. CDL - Commercial Drivers License

e. CFR - Code of Federal Regulations

f. CPR - Cardiopulmonary Resuscitation

g. dB(A) - Decibels Adjusted

h. dc - Direct Current

i. EO - Electrical Officer

j. EPA - Environmental Protection Agency

k. ES - Electrical Supervisor

l. FRP - Fiberglass Reinforced Plastic

m. ft - Feet

n. Hz - Hertz

o. ICEA - Insulated Cable Engineers Association

p. In. - Inch

q. JHA - Job Hazard Analysis

r. kV - Kilovolts

s. LEL - Lower Explosive Limit

t. LOGREG - Logistics Requirement

u. LTC - Load-Tap-Changing

v. m - Meter

w. MSDS - Material Safety Data Sheets

x. NAVFACENGCOM - Naval Facilities Engineering Command

y. NAVOSH - Navy Occupational Safety and Health

z. NEC - National Electrical Code

aa. NESC - National Electrical Safety Code

bb. NFPA - National Fire Protection Association

cc. OSHA - Occupational Safety and Health Administration

dd. PCB - Polychlorinated Biphenyls

ee. PVC - Polyvinyl Chloride

ff. PWC - Public Work Center

gg. SCBA - Self-Contained Breathing Apparatus

hh. SF_6 - Sulfur Hexafluoride

ii. SOP - Standard Operating Procedure

jj. V – Volts

3.2 **Definitions.** Definitions for terms used in this handbook are contained in IEEE 1000, The IEEE Standard Dictionary of Electrical and Electronics Terms.

Section 4. GENERAL SAFETY PRACTICES

4.1 **Safety.** To prevent mishaps, facilities engineer and electrical maintenance personnel are required to have a general understanding of electrical safety and an awareness of electrical hazards in transmission and distribution maintenance work.

4.1.1 **Use.** Use the information to remind you of the safety requirements of the Occupational Safety and Health Administration (OSHA), NAVFAC 5100.11, NAVFACENCOM Safety and Health Program, OPNAVINST 5100.23, Navy Occupational Safety and Health (NAVOSH) Program Manual, and OPNAVINST 5100.24, Navy System Safety Program. Also refer to OPNAV 11310.3, Operation and Maintenance of Shore-to-Ship Power and NAVFAC 11300.37A, Energy and Utility Policy Manual.

4.1.2 **Construction.** All Naval activities are required to comply with the latest OSHA standards of 29 CFR 1926, Subpart V, Power Transmission and Distribution.

4.1.3 **Qualifying Personnel.** All personnel working on or near Naval activities' electrical power generation, control, transformation, transmission, and distribution lines and equipment should demonstrate a complete working knowledge of all elements of the applicable sections of OSHA standard 29 CFR 1910.269, Electric Power Generation, Transmission, and Distribution.

4.1.4 **Application.** In following the safety precautions of this handbook and of OSHA or other references herein, the most stringent requirement will apply.

4.1.5 **Unique Requirements.** All workers qualified to provide shore power to Navy ships are required to comply with shore-to-ship safety requirements. Ship's services are ungrounded systems that meet the design requirements of OSHA standard 29 CFR 1910.304 Design Safety Standards for Electrical Systems.

4.2 **Job Hazards.** Awareness of job hazards is the key to mishap prevention.

4.2.1 **Accessibility.** The more accessible and protected the work area the less hazards that will confront the worker. Where access items are required comply with OSHA standard 29 CFR 1910.269(h), Ladders, Platforms, Step Bolts, and Manhole Steps.

4.2.1.1 **Inside Work.** Inside work may require special protective apparel, especially if hazardous substances are present. Ladders or scaffolds may be used and workers should then conform to applicable elevated position work requirements.

4.2.1.2 **At Grade Work.** At grade work may require protection from the weather and also work area protection from the public if not suitably fenced or otherwise guarded.

4.2.1.3 **Aerial Work.** Aerial work may be on poles, trees, or aerial lift bucket trucks.

4.2.1.4 **Underground Work.** Most underground work will be considered work in a confined space and should meet those protective requirements. Openings need to be guarded against accidental entry. Additional ventilation and auxiliary pumping may be necessary. Energized lines in the immediate vicinity of the work need to be tagged so that the worker is aware of their proximity.

4.2.2 **Work Area Protection.** Improper work area set up, that is, poor signs, traffic control or security could result in an accident. Vehicle operators should watch out for obstacles such as a high-voltage pole and also for pedestrians. Activity regulations, federal regulations and safe working procedures should be followed. Planning should be tailored to the work site. Adequate barriers, warning signs, traffic cones, and lights, should be located on approaches to and at the work areas, excavations, open manholes, parked equipment, and other hazards. Flagmen are necessary if there is any doubt that the warning devices are not adequate as controls.

4.2.3 **Normal Environmental Impacts.** Potential mishaps can result from the environment where the work is to be done.

4.2.3.1 **Work in Elevated Positions or Near Waterways.** It is required that a safety lanyard be attached to a full body harness when a worker is in an elevated position above 1.2 meters (4 feet). Another danger of work in an elevated position is the possibility of dropping materials or tools that might endanger others in the work area. Prevent others from passing underneath by providing approved signs or guards in suitable locations. Provide supporting devices for workers, tools, and materials where a falling hazard exists. Provide flotation devices for workers where the falling hazard is near a waterway.

4.2.3.2 **Work in Confined or Enclosed Spaces.** A confined space is an enclosed space with restricted access and insufficient ventilation such as vaults, manholes, and tanks.

4.2.3.3 **Noise Control.** Protection against the effects of noise exposure should be provided for facility workers whenever the sound level equals or exceeds 85 dB(A) decibels adjusted continuous level pressure or 140 decibels peak sound level pressure for impulse or impact noise, regardless of the duration of exposure.

4.2.3.4 **Lighting.** Safety requires adequate illumination of the working area. Where natural or installed artificial illumination is not sufficient, then temporary lighting should be provided. The use of matches or open flames to provide such illumination is forbidden.

4.2.4 **Hazardous Environmental Impacts.** When dealing with hazardous substances, become familiar with their material safety data sheets (MSDS) by requesting them from your foreman or supervisor. Verify from the MSDS what allergic reactions may be expected and how such reactions should be treated.

a. Bodily harm can result from contact with asbestos, polychlorinated biphenyls (PCB), and sulfur hexafluoride (SF_6). All are classified as hazardous substances and should be treated in accordance with Environmental Protection Agency (EPA) regulations.

b. Preservative treatments for wood products also require special handling.

4.2.4.1 **Asbestos.** Asbestos is no longer being installed for insulation or fire protection purposes or used as a conduit or piping material. Cutting existing asbestos materials can release asbestos fibers to the atmosphere. If fibers are suspended in the air in significant quantities, respiratory harm may be caused by their inhalation.

Note: Employees who are not qualified to work with asbestos are not to handle or remove materials containing asbestos fibers. Refer to *29 CFR 1015.1001(Asbestos*) for worker qualifications and requirements for handling asbestos containing materials.

Precautionary steps for prevention to asbestos exposures

1.Have unknown material tested for asbestos. 2.Keep unknown fibers off clothing. Wear disposable coveralls.	3.Wear proper respiratory protection: either full face or half face respirators with P-100 Filter if working with fibrous materials. 4. After working with materials, wash hands prior to eating, drinking or taking a break.

4.2.4.2 **Polychlorinated Biphenyls (PCB).** Oil-filled equipment such as transformers or regulators, circuit breakers, and capacitors with PCB insulating fluid should have been removed to meet NAVFAC directives or at least be identified as PCB-contaminated to meet EPA regulations.

4.2.4.3 **Sulfur Hexafluoride (SF_6).** In its pure state, SF_6 is a colorless, odorless, tasteless, nonflammable, nontoxic, and noncorrosive gas shipped in a liquid form. Since it is five times heavier than air it can act as an asphyxiant and in a liquid state it can cause tissue freezing similar to frost bite. Its decomposition products, which can result from electric arcs or faults, are toxic.

4.2.4.4 **Wood Product Preservative Treatments.** Creosote and water-borne or oil-borne preservatives used to treat wood products can only be used by certified pesticide applicators. Only copper naphthenate preservative treatment does not require certification for its use.

4.2.5 **Explosive or Hazardous Vapors.** Battery rooms should be located in a ventilated corner of the control room because of the potentially explosive hydrogen gas released. Combustible gases can accumulate in transformer vaults and manholes. A spark or flame, such as smoking in the vicinity, can ignite these gases. Carbon monoxide may occur from cable faults or

combustion engine exhausts. Hydrogen chloride can result from faults or fires involving polyvinyl chloride (PVC) conduits or PCB oils. Adequate oxygen may be unavailable when the atmosphere is displaced by heavier-than-air gases.

4.3 **Reminder of Electrical Hazards in the Field.** Always identify the electrical hazards applying to the work being done. Rules, apparel, tools, and tests, if correctly used, will protect you from the destructive effects of electric shocks, arcs, and blasts and the hazards of elevated and confined workplaces.

4.3.1 **Dangers From Electric Shock.** Electric shock results from setting up an electric current path within the human body. The current flows because there is a potential gradient (voltage difference) between an energized object and the grounded worker. Figure 1 shows potential gradients and the safe area or equipotential zone, which has no potential gradient. Figure 2 indicates current flow paths. Table 1 indicates the effects of 60-hertz current on humans.

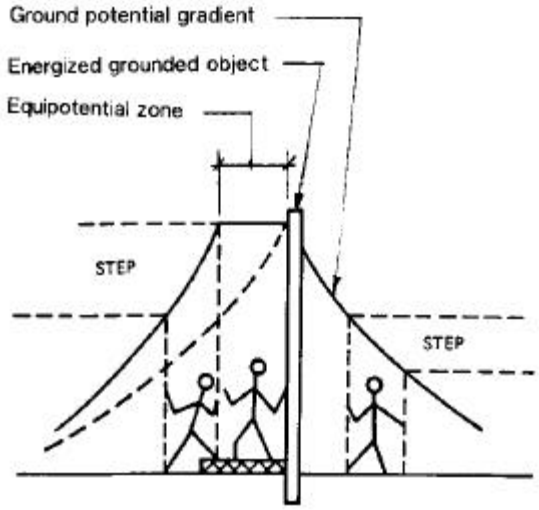

Figure 1
Ground Potential Gradient

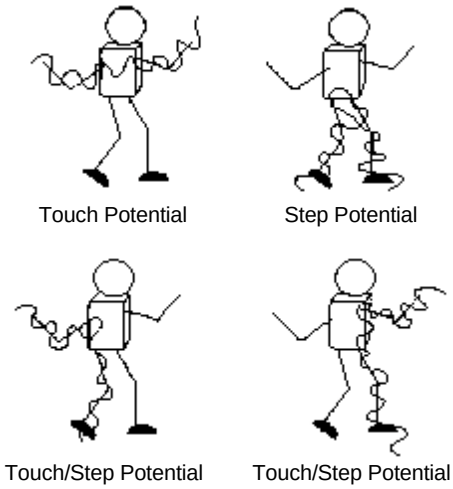

The current path will determine which tissues and organs will be damaged or destroyed. The pathway is differentiated into three groups: touch potential, step potential, and touch/step potential.

Figure 2
Current Path Flow

Table 1
Effects of 60-Hertz Current on Humans

Effect	Milliamperes	
	Men	Women[1]
Slight sensation on hand	0.4	0.3
Perception threshold	1.1	0.7
Shock, not painful and muscular control not lost	1.8	1.2
Painful shock, painful but muscular control not lost	9	6
Painful and severe shock, muscular contractions, breathing difficult	23	15
Ventricular fibrillation, threshold	75	75
Ventricular fibrillation, fatal (usually fatal for shock duration of 5 seconds or longer)	235	235
Heart paralysis (no ventricular fibrillation), threshold (usually not fatal; heart often restarts after short shocks)	4,000	4,000
Tissue burning (usually not fatal unless vital organs damaged)	5,000	5,000

[1]The current values for women are lower because women typically have less body mass than men.

4.3.2 **Danger From Arcs and Blasts.** Arcs result from the passage of electric current through air. The air fails as an insulator but serves as a conducting medium for ionized gases. Blasts result when the metal at the arc site expands and vaporizes. Arcs can reach temperatures up to four times the temperature of the sun's surface. Water expands 1,670 times when it becomes steam; copper expands 67,000 times when it vaporizes. High-energy arcs can be fatal even at distances of 3 meters (10 feet).

4.4 **Protection Against Hazards.** Personal safety equipment prescribed by the activity Safety Office should be used. It includes general body protection and safety tools and equipment. Comply with OSHA standard 29 CFR 1910.269(i), Hand and Portable Power Tools.

4.4.1 **General Body Protection.** Always wear personal protective clothing as required by your supervisor and as appropriate to the work area, work methods, and site hazards. Wear these items because it is impossible or impractical to totally eliminate all work site hazards and they will reduce your chance of injury or illness. OSHA standard 29 CFR 1926 Subpart E, Personal Protective and Life-Saving Equipment covers this protection and indicates where it is required. An example is where confined spaces or hazardous gases mandate respirators. A summary of apparel requirements for general body protection is given in Table 2.

Table 2
Apparel and Body Protection Requirements

I. Clothing:

A. Around nonelectrical industrial activities wear full length work pants and shirts with at least short sleeves.

B. Around machinery you may not wear or have dangling sleeves, neckties, or unsecured long hair.

C. Around vehicular traffic or on the flightline wear safety color fluorescent clothing with approximately 0.33 square meters (3.5 square feet) of reflective area above the waste.

D. On or near energized lines/equipment wear long-sleeved apparel with no acetate, nylon, polyester, or rayon alone or in blends; no metallic items (fasteners); no jewelry items; and no celluloid items. Flame-resistant clothing is required where arc blast hazards are identified. See Table 11.

Table 2 (Continued)
Apparel and Body Protection Requirements

II. Head Areas

A. Wear an ANSI Z89.1, Protective Headwear for Industrial Workers type B or type E hard hat that has a rating of 20,000 volts, 60 hertz for 3 minutes, provides a suspension to 38 millimeters (1.5 inches) above the head, and can include an optional cold weather liner and chin strap. Wear where exposed to energized lines/equipment and falling objects such as exterior substations, overhead and underground lines, construction sites, fuse changing, voltage readings, and maintenance of batteries and medium-voltage equipment.

B. Wear ANSI Z87.1, Occupational and Educational Eye and Face Protection eye and face protection with impact-resistant lenses and side shields. Contact lenses do not provide eye protection. Face shields do not provide impact eye protection. Filter lenses are required for radiant energy protection.

C. Use ear plugs or inserts in ear canals that provide 25 to 30 decibel attenuation or ear caps and muffs or muffs that go over ear canals and provide 22 to 27 decibel attenuation. A combination of both can provide 35 to 37 decibel attenuation. All need careful fitting.

D. Respiratory protection needs to be provided per the confined space entry plan and/or the hazardous material regulated area requirement. Use NIOSH certified device if the hazard type has a NIOSH performance requirement. Use for emergencies only; correct hazardous atmospheric conditions with ventilation. Requires special training and fitting.

III. Other Body Areas

A. Apply appropriate protective ointment to skin if needed for exposed areas. Ointment should not be damaging to rubber goods.

B. Use rubber gloves where required in other chapters of this handbook. Use leather palm gloves for protection when rubber gloves are not required. Use welders' gloves when welding.

C. Wear ANSI Z41, Protective Footwear, P591, C75 or I75 shoes rated for 34 kilograms (75 pounds) crushing strength and having no heel or toe plates or hobnails. Use electrically insulated shoes for de-energized line work within 3 meters (10 feet) of grounded items. Use conductive shoes where needed for protection from static discharges.

4.4.2 **Safety Equipment and Tools.** When working around electrical lines and equipment, temporary protective insulation is provided by using the insulating properties of rubber goods, plastic guard equipment, and live-line tools. Platforms and aerial lift bucket trucks provide insulated supports for positioning a worker.

4.4.2.1 **Rubber Protective Equipment.** Equipment consists of gloves, sleeves, blankets, covers, and line hose. All items should meet or exceed requirements of the applicable ASTM F 18 series specification and be suitable for the working voltage level (Table 3). Rubber goods should be visually inspected before use. An air test of gloves is also required. Workers should periodically review ASTM F 1236, Guide for Visual Inspection of Protective Rubber Products. Electrically retest rubber goods issued for service based on work practice and test experience intervals. Retesting intervals should not exceed 6 months for rubber gloves and 12 months for rubber sleeves and blankets. Retest any rubber goods where there may be a reason to suspect the electrical integrity of the equipment. Electrically retest items that have been removed from storage for issue for service, unless they were electrically tested at the time of placement into storage and storage time does not exceed 12 months.

Table 3
ASTM F 18 Rubber Goods[1]

Maximum use, ac volts	Class	Color label	Proof test ac volts	Minimum distance[2] millimeters (inches)
1,000	0	Red	5,000	25 (1)
7,500	1	White	10,000	25 (1)
17,000	2	Yellow	20,000	50 (2)
26,500	3	Green	30,000	75 (3)
36,000	4	Orange	40,000	4 (100)

[1]Wear leather protectors over rubber gloves.
[2]Minimum length of exposed rubber glove above the leather protector.

4.4.2.2 **Plastic Guard Equipment.** This equipment is rated for momentary (brush) contact protection. Guards include those installed on conductors; connecting covers used over lines, insulators, buses, and structures; and apparatus guards used over poles, crossarms, cutouts, and switchblades. See Tables 33 and 34 in section 5. Electrically retest plastic guard equipment based on work practice and test experience. Electrically retest items where there may be a reason to suspect the electrical integrity of the equipment.

4.4.2.3 **Live-Line Tools.** Comply with the requirements of OSHA standard 29 CFR 1910.269(j), Live-Line Tools. ANSI/IEEE 935, Guide on Terminology for Tools and Equipment

to be Used in Live-Line Working covers the live-line tools used to hold, move, operate, and test equipment. Tools are only as safe as their continued care and inspection make them. Try to always use a fiberglass tool as it is impervious to oil-borne materials and solvents, is stronger, and is a better insulator than wood. Live-line tools should be wiped clean and visually inspected before use each day. Do not use tools in rain or heavy fog, except in an emergency where directed by your foreman/lead electrician. In any case, never use tools when weather conditions allow formation of rivulets of water along the tool. Hang tools on hand lines or approved tool hangers, never on conductors or ground (bond) wires.

4.4.2.4 **Other Safety Requirements.** Use of energy hazard detection devices, equipment for positioning workers safely (aerial lift bucket trucks and fall protection), and temporary grounding cables are covered in later sections. Always use fiberglass ladders around electrical lines.

4.5 **General Safety Observances.** Observing presite job requirements, avoiding prohibited actions, and reporting unsafe worker indications as given in Table 4 will prevent personnel injury and equipment damage. Table 5 summarizes significant unsafe actions and conditions.

4.6 **Worker/Crew Responsibilities.** All personnel are responsible for safety at all times, for prompt mishap handling, and conducting before each job a program in accordance with OSHA standard 29 CFR 1910.269(c), Job Briefing.

4.6.1 **Levels of Responsibility.** Operation and maintenance of electrical distribution systems are a single group responsibility. The same personnel will frequently perform both functions. Safety accountability duties are given in Table 6.

4.6.2 **Qualifications.** Qualifications for electrical workers are normally established locally. Workers are classified as Qualified or Unqualified.

4.6.2.1 **Qualified Workers.** Persons who by training and demonstration are familiar with the skills and techniques for: (1) distinguishing exposed live parts from other parts of electric equipment; (2) determining the nominal voltage of exposed live parts; and (3) maintaining minimum clearance distances corresponding to the voltages to which that person will be exposed.

4.6.2.2 **Unqualified Workers.** Persons not meeting the requirements for Qualified Worker. However, to be on the job these persons should be trained in all electrically related practices that are necessary for their safety.

Table 4
General Safety Observances

I. Presite job requirements
- A. Regular safety meetings
- B. Job hazard analysis if required
- C. Written work procedures covering existing conditions
- D. Tailgate briefings

II. Prohibited actions while working
- A. Taking chances
- B. Playing jokes
- C. Carelessness
- D. Smoking
- E. Use of intoxicants or drugs
- F. Throwing material
- G. Quarreling
- H. Disobedience
- I. Unnecessary talking or noise
- J. Working while ill or under emotional stress

III. Unsafe worker conditions
- A. Lacks information
- B. Lacks skills
- C. Lacks experience
- D. Unaware of safe practices
- E. Doesn't realize danger

4.6.3 **Mishap Handling.** Each worker should know what to do when a mishap occurs. Additionally, each worker should know how to report injuries and other mishaps.

4.6.3.1 **Knowing What to Do.** Table 7 summarizes the first aid knowledge required of each worker. As a preplanning aid, an emergency telephone number list should be prepared to include the location and telephone numbers of the nearest ambulance or emergency medical treatment responders, the nearest hospital with an emergency room, the nearest helicopter evacuation service, and the nearest burn trauma center.

Table 5
Significant Unsafe Actions and Conditions

I. Unsafe actions

A. Operating without authority; failure to secure or warn others
B. Operating or working at unsafe speeds
C. Making safety devices inoperative without proper authorization
D. Using unsafe equipment (hands instead of equipment) or equipment unsafely
E. Taking unsafe positions or postures
F. Working on moving or dangerous equipment
G. Distracting, teasing, abusing, startling
H. Failing to use safe attire or personal protective devices
I. Failing to lock-out energized circuits

II. Unsafe conditions

A. Improperly guarded facilities
B. Defects of facilities
C. Hazardous arrangement or procedure
D. Improper ventilation
E. Improper illumination
F. Unsafe dress or apparel

Table 6
Levels of Safety Accountability

Title	Electric safety accountability
Activity commander	Ultimate safety responsibility
Public works officer	Base systems safety responsibility
Electric supervisor (if assigned)	Systems safety responsibility
Foreman/lead electrician	Systems safety and specific work task safety responsibilities
Crew members	Crewmembers' safety responsibility is limited to doing only work for which they are qualified.

Table 7
Knowing What To Do

First Aid	How to control bleeding and apply artificial respiration and cardiopulmonary resuscitation (CPR). How to provide pole top and manhole rescues of mishap victims. Familiarity with electric shock symptoms.
Medical provisions	Location, contents, and use of first aid kits and where located in electric line and aerial lift vehicles. How to get medical assistance.

4.6.3.2 **Work Injuries and Mishap Reports.** Report injuries, even minor ones, to your immediate supervisor in accordance with OPNAVINST 5100.23. Additionally, every mishap involving personnel injury, property damage, or near misses should be investigated to determine the cause and the corrective action needed to prevent recurrence. Base safety personnel conduct investigations. Local safety staff should be notified of all mishaps that involve personnel injuries or property damage. Mishaps should be investigated and reported through safety channels.

4.6.3.3 **Rescue Operations.** Rescue operations will vary with the individual situation. A good rule of thumb is never to touch any live parts or any person in contact with live parts without using an insulating medium. Always wear personal protective equipment. Before rendering any assistance, the rescuer should make an emergency call to the dispatcher on the two-way radio or the nearest telephone. He/she should quickly pinpoint the location of the mishap, describe the problem, and the assistance required.

4.7 **Lockout/Tagout/Tryout of Hazardous Energy Sources.** OSHA standard 29 CFR 1910.269(d), Hazardous Energy Control (Lockout/Tagout/Tryout), and (m), De-energizing Lines and Equipment for Employee Protection require that the following safety precautions be observed when working on lines and equipment rated over 50 volts. Sections of lines or equipment to be de-energized should be clearly identified and isolated from all energy sources. The designated employee should ensure that all switches and disconnecting devices have been de-energized, opened, tagged, and locked out to indicate people are working on the circuit downstream. After all disconnecting devices have been opened, tagged, and locked out, visual inspection or tests with a voltmeter or other instrument should be conducted to insure that the equipment or lines are de-energized. Finally, protective grounds should be placed on the disconnected lines or equipment to be worked on in accordance with 29 CFR 1910.269(n), Grounding for Protection of Employees. In summary, all Naval activities are required implement the requirements of Table 8 in developing an equipment energy control program.

Table 8
Lockout/Tagout/Tryout Control Program Development

I. Equipment

A. Employ additional means to ensure safety when tags rather than locks are used by instituting an effective program.

B. Ensure that new or overhauled equipment can be locked.

C. Obtain standardized locks and tags that indicate the identity of the employee using them, and which are of sufficient quality and durability to ensure their effectiveness.

II. Procedures

A. Identify and implement specific procedures (generally in writing) for the control of hazardous energy including preparations for shutdown, equipment isolation, lockout/tagout/tryout application, release of stored energy, and verification of isolation.

B. Institute procedures for release of lockout/tagout/tryout including machine inspection, notification and safe positioning of employees, and removal of the lockout/tagout/tryout device.

C. Adopt procedures to ensure safety when equipment should be tested during servicing, when outside contractors are working at the site, when a multiple lockout/tagout/tryout is needed for a crew servicing equipment, and when shifts or personnel change.

III. Inspection and training

A. Conduct inspections of equipment and lockout/tagout/tryout control procedures at least annually.

B. Train employees in the specific equipment lockout/tagout/tryout control procedures with training reminders as part of the annual control inspections.

4.8 **Training.** OSHA standard 29 CFR 1910.269(a), General requires training in safety-related work practices, safety procedures, and other safety requirements that pertain to electrical workers performing their work assignments including determinations of existing conditions. Training and recertification in cardiopulmonary resuscitation (CPR) and first aid are required. Refer to OSHA 29 CFR 1926.269(b), Medical Services and First Aid. Crews generally

work in pairs or a team. Each crewmember should be trained to go to a crewmate's rescue if the person appears to need help, providing the helper is not in any danger whatsoever.

4.8.1 **Programs.** Ensure that all the topics of Table 9 are included in an activities training program. The use of safety posters, mockups (or actual equipment), pictures, and other aids are essential in conducting successful safety meetings. Enthusiasm is always desirable. Training seminars should be held in-house at Public Work Centers (PWCs) or other activity locations. Supplementary training from commercial sources such as that by equipment manufacturer or by training institutes should be scheduled as required.

Table 9
Required Training

I. Basic job training

A. General safety practices, awareness of potential hazards, attitude towards the job.

B. Proper attire, use of general body protection (see Table 2) and inspection, maintenance, and test of tools and equipment.

C. Regulations and proper procedures for operation of tools, equipment, and protective devices.

D. Teamwork and communication, including supervisory interface with team.

E. Use of this handbook and references given in Section 2.

II. Specific job training

A. Use of standard operating procedures/job hazard analysis. See Table 10.

B. On the job training.

C. Lockout/tagout/tryout procedures.

D. Rescue operations including CPR.

III. Safety topics

A. Safety rules, methods, and hazards connected with the work in progress.

B. Unsafe practices.

C. A thorough discussion of any accidents that may have occurred recently.

D. Safe driving and safe use of motorized equipment (for example - aerial lift bucket trucks, line trucks, and trailers).

E. Accident reports, safety bulletins, posters, and other material furnished by the installation safety director.

F. Work in underground (confined space training) facilities.

G. Work on or near machinery, or work in elevated positions.

H. Grounding systems.

4.8.2 **Standard Operating Procedures/Job Hazard Analysis.** Written SOP/JHA's should be prepared for unusual or complicated work activities that involve more than working on nonhazardous materials in accessible locations where the equipment can be de-energized. These procedures may be prepared generally but also need to include specifics applying to the existing conditions and work location. Provide procedures covering the items given in Table 10.

Table 10
SOP/JHA Procedures

I. General

A. Description of work to be done.

B. Specific hazards and how to minimize or eliminate them by use of specific safety equipment.

C. Instructions covering special working area practices on grounding, unusual equipment or tools, and any particular first aid requirements for hazardous materials.

D. Sequence of major steps or a detailed step-by-step work listing.

II. Specifics (if not included above)

A. Work location.

B. Nominal line voltages.

C. Maximum switching transient voltages.

D. Possible hazardous induced voltages.

E. Condition of protective grounds and equipment grounding conductors.

F. Conditions of environment relative to safety (poles, traffic, need for additional protective equipment such as fall protection or flotation devices).

G. Locations of other lines including communication and fire protective signaling circuits not involved in the work.

Section 5. WORK ON DE-ENERGIZED OR ENERGIZED LINE SAFETY REQUIREMENTS

5.1 **Electrical Aspects Affecting Safety.** Working on or near normally energized lines or parts requires observance of rules applying to safe working distances, work methods related to whether the line has been de-energized or left hot, and recognition of work hazards that require more than one worker for safety.

5.1.1 Safe Working Distances

WARNING

Only workers qualified by electrical training may work in areas on or with unguarded, uninsulated energized lines or parts of equipment operating at 50 volts or more (refer to subsection 4.6.2). All electric lines and equipment will be treated as energized unless de-energized and grounded. Maintain the minimum clearances of Tables 11 and 12 based on the voltage range. The flash protection boundary distance requires the wearing of flame-resistant clothing (see Table 2).

Table 11A
Limits of Approach

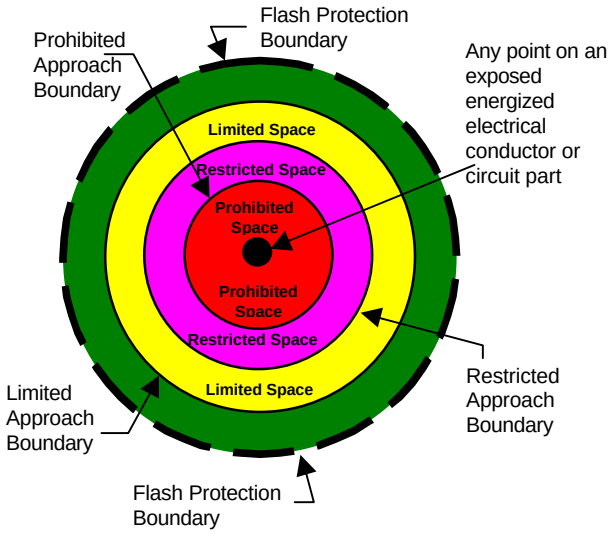

Safe Working Procedures

1. PROHIBITED approach that allows for space between the worker and the live equipment large enough to prevent flashover, due to disturbance of electrical fields.
2. RESTRICTED approach between the worker and the live conductor that provides space to allow for inadvertent action or reflex jerk movement of the body.
3. LIMITED approach with space for qualified workers to position.
4. FLASH PROTECTION BOUNDARY approach distance beyond which flash protection (flame-resistant clothing) is required.

These boundaries are all created for the qualified worker. It also defines flash protection boundary.

Table 11B
Qualified Worker Minimum Working Distances

1	2	3	4	5		6
Nominal System Voltage Range.	Flash Protection Boundary	Limited Approach Boundary		Minimum Working Distance [1] and Clear Hot Stick Distance [2] Includes Standard Inadvertent Movement Adder		Prohibited Approach Boundary Includes Reduced Inadvertent Movement Adder
	From Phase to Phase Voltage	Exposed Movable Conductor	Exposed Fixed Circuit Part	Phase To Phase [3]	Phase To Ground [4]	
50 V to 300 V	3ft 0in	10ft 0in	3ft 6in	Avoid Contact		
301 V to 750 V	3ft 0in	10ft 0in	3ft 6in	1ft 0in	1ft 0in	0ft 1in
751 V to 2 kV	4ft 0in	10ft 0in	4ft 0in	2ft 3in	2ft 2in	0ft 3in
2.001 kV to 15 kV	16ft 0in	10ft 0in	5ft 0in	2ft 3in	2ft 2in	0ft 7in
15.001 kV to 36 kV	19ft 0in	10ft 0in	6ft 0in	2ft 10in	2ft 7in	0ft 10in
36.001 kV to 48.3 kV	21ft 0in	10ft 0in	8ft 0in	2ft 10in	2ft 10in	1ft 5in

1- Distance between energized parts and grounded objects without insulation, isolation, or guards.
2- Between worker's hand and working end of stick.
3- Work on three-phase delta systems, and on more than one phase of three-phase wye systems.
4- Work on single-phase systems, and work on one phase only of three-phase wye systems.

Table 12
Unqualified Worker Minimum Approach Distances

Voltage to ground	Distance
50 kV or below	3 m (10 ft)

5.1.2 **Work Methods in Relation to Worker's Safety.** All work will be done de-energized unless energized line work has been specifically authorized.

5.1.2.1 **De-energized Electrical Line Work.** Follow the lockout/tagout/tryout procedures. Remember electric lines are considered energized even though de-energized and isolated if they have not been provided with proper protective grounding.

5.1.2.2 **Energized Electrical Line Work.** Work on energized lines and equipment only when authorized by the Public Works Officer or other designated authority (per local organization) based on the need to support a critical mission, to prevent injury to persons, or to protect property. Insulating means should be provided to isolate workers from a source of potential difference. When authorized, perform energized line work. Barehand liveline work is prohibited.

5.1.2.3 **Number of Qualified Workers Per Hazard Exposure.** OSHA standard 29 CFR 1910.269 requires more than one worker where the hazard exposure of the work is considered to be significantly reduced by the presence of additional workers. Tables 13 and 14 cover these requirements. Table 15 indicates acceptable work where only one worker is needed. These tables cover the minimum number of workers required; more workers may be necessary to provide safe working conditions in some circumstances.

Table 13
Jobs Requiring Two Electrical Workers

Hazard exposure	Working on
Installation, removal, or repair when working on or near lines or parts energized at more than 600 volts ac or 250 volts dc	I. Energized lines II. De-energized lines with possible energized parts contact III. Equipment with possible energized line contact IV. Mechanical equipment operation (except insulated aerial lifts) near energized parts V. Other work with equal or greater hazard exposure

Table 14
Jobs Working in Confined Spaces
Requiring Additional Workers

Hazard exposure	Additional worker requirement
Installation, removal, or repair when working in a confined space. Manhole or vault requirements are generally classified as confined spaces.	1. An attendant with first-aid and CPR training will be available on the surface in the immediate vicinity. 2. If a hazard exists within the space, or a hazard exists or is created because of traffic patterns outside the space, the attendant may not enter the confined space. 3. If the restrictions of Item 2 above do not apply, the attendant may enter the confined space to provide assistance, but only for a brief period (other than in an emergency). For extended periods of assistance, a second worker in addition to the attendant is required.

Table 15
Jobs Generally Acceptable for One Electrical Worker

I. Work on de-energized systems with nominal system voltages of 600 volts ac or 250 volts dc, or less.

II. Routine electrical measurements on energized systems with nominal system voltages of 600 volts ac or 250 volts dc, or less.

III. Routine operation of metal-enclosed switchgear with nominal system voltages of 600 volts ac or 250 volts dc, or less.

IV. Routine electrical measurements or switching using gloves and live-line tools if the worker is positioned out of reach or possible contact with energized parts.

V. Emergency repair work to safeguard the general public, if previously authorized.

5.1.3 **Verifying Electrical Systems and Equipment Provisions.** Check out the equipment needed such as insulating tools, hot sticks, and grounding cables. Have necessary safety hazard detection devices at the work site.

Note

Be familiar with the electrical system you are working on by reviewing the system's single line diagram.

5.1.4 **Safety Hazard Detection Devices.** Potential differences, induced voltages on lines, accidental short circuiting, leakage current across insulated protective equipment, and combustible gas accumulation can create safety hazards if not detected by the use of proper test devices. Typical test devices include:

WARNING

Operate safety hazard detection devices according to manufacturers' operating instructions.

5.1.4.1 **Potential Differences.** Voltage detectors are used to determine whether the line or device is energized. Low-voltage detectors often use neon glow lamps or solenoid plunger testers. Glow lamps are not recommended as they can pick up stray induced voltages and give a false indication that the line is energized. Medium- and high-voltage detectors are proximity and direct-contact types. Direct-contact type detectors may not be effective on circuits not connected to ground, and proximity-type detectors may not be effective where magnetic fields can cancel (such as cable potheads). Proximity-type detectors cannot detect nonalternating (dc) voltages. Never use portable multimeters for measurements on medium- and high-voltage systems. Always check a voltage detector for proper operation using the "hot-dead-hot" method: first, check the detector on a known energized circuit, then check the desired line or device for voltage, and last, check the detector on a known energized circuit.

5.1.4.2 **Phasing Testers.** Phasing testers are used to determine the phase relationship of energized lines. Short circuits occur when different phases are tied together. A phasing tester can use two high-resistance units on hot sticks connected by a phasing-out voltmeter. Where voltage transformers are available, a voltmeter can be connected between one side to the other side. If lines are in phase, the voltmeter will register zero. If performing a phasing check at a generator disconnect, the maximum voltage rating of the phasing tester should be at least two times the nominal rated voltage of the circuit to be tested.

5.1.4.3 **Combustible Gas/Oxygen Detectors.** Portable monitors provide visual and audible warnings of explosive atmospheres and/or low oxygen levels that often occur in confined spaces. A continuous reading is given of any gas concentration ranging from 0 to 100 percent of the lower explosive limit (LEL) and 0 to 25 percent of the oxygen level. A detector can be used to check battery rooms where ventilation is suspect. Determine if a hazardous atmosphere exists before entering a confined space. Hazardous atmospheres include: a contaminant concentration 10 percent or more of its lower explosive limit; oxygen concentration less than 19.5 percent by volume; contaminant concentrations exceeding specific OSHA standards (lead, asbestos, cadmium, and like substances); and oxygen concentration more than 23 percent by volume, particularly if oil mist or other combustible materials are present.

5.1.4.4 **Aerial-Lift Bucket Truck Leakage-Current Monitoring.** Leakage current flows along the surface of tools or equipment due to the properties of the device's surface and surface deposits. The permissible leakage current on aerial lifts is one microampere per kilovolt ac or 0.5 microamperes per kilovolt dc. Adverse weather conditions derate the normal dielectric quality of air that results in a greater leakage current. Periodic testing is required. The use of a monitor on an aerial lift bucket truck providing a continuous display of leakage current is recommended. The monitor should sound an alarm at a pre-set leakage current level to alert workers to danger.

5.2 **De-energized Line Work Prescheduling.** De-energized line work requires an electrical outage done in accordance with the facilities switching order package. Table 16 lists the items that need to be developed for outage packages.

5.2.1 **Preparation Responsibility.** Depending on the size of the naval facility the items listed in the Table 16 may utilize standard forms or provide a standard operating procedure indicating data to be provided. An employee in charge will initiate the request for utility operation as shown on Table 16. The rest of the documents of Table 16 will be provided by the authorized authority for power dispatching switching order outage packages.

5.2.2 **Safety Basics.** The basics of safety for every outage consists of the lockout/tagout/tryout procedures that can be simplified as providing a recognition of energy hazards, a sequence of lockout/tagout/tryout steps for every energy hazard and correctly locking and tagging the necessary devices.

Table 16
Switching Order Outage Package Documents

I.	Request for utility interruption.
II.	PWC/EFD scheduled interruption of utility services notice
III.	Notes concerning the outage
IV.	Switch out switching orders
V.	Switch back switching orders
VI.	Lockout/tagout/tryout fact sheet
VII.	Distribution one-line diagrams
VIII.	Outage safety briefing memo
IX.	Switch operator briefing memo
X.	Clearance notice

5.2.2.1 **Hazardous Energy Elimination**

WARNING

Eliminate any source of hazardous energy affecting the work by controlling electrical and nonelectrical energy hazards as shown in Table 17.

Table 17
Hazardous Energy Control

I. Electrical systems/equipment

A. Isolating by control operation such as open switching devices; lockout/tagout/tryout if possible; pull plugs or fuses; block interlock feedbacks.

B. Stored energy release such as disconnect and discharge capacitors, choke coils, and surge arresters; discharge static electricity; temporarily short to ground induced voltage from adjacent lines, static charges, accidental connections, and incorrect disconnections; provide shielding for possible contact with energized parts

C. Verify by testing there is no voltage on de-energized system/equipment.

II. Nonelectric energy hazards

A. Check for chemical, electromagnetic, mechanical, pneumatic, thermal, and ultraviolet energy.

B. Isolate by blocking valve operations or other control operations for the above systems.

C. Discharge trapped energy by releasing pressure or by draining/purging lines and verify lack of rotation or dangerous temperatures.

5.2.2.2 **Lockout/Tagout/Tryout Instructions**

WARNING

Each lockout/tagout/tryout instruction for a specific job should cover all the steps given in Table 18. Provide tags in accordance with Table 19.

Table 18
Sequence of Lockout/Tagout/Tryout Steps

I. De-energizing steps

A. Notify all affected workers of hazards, their control, and any possible stored energy.

B. Shut down the system by isolation of energy sources. System is rendered inoperative.

C. Secure all energy source shutdowns by lockout/tagout/tryout of controls.

D. Release all stored energy and verify such release.

E. Verify by testing there is no voltage.

F. Provide temporary grounding (refer to par. 5.3).

Table 18 (Continued)
Sequence of Lockout/Tagout/Tryout Steps

II. Re-energizing steps

A. Inspect the work area for an operationally intact system and remove nonessential items.
B. Notify all affected workers of system re-energizing. Warn them to stand clear.
C. Remove temporary grounding.
D. Remove the lockout/tagout/tryout devices.
E. Visually determine that all affected workers are clear of the circuit.
F. Proceed with restoring service.

Table 19
Tag Requirements

Color	Warning	Use for	Do not use for
RED	DANGER HOLD	Tagout for de-energizing a circuit or equipment	Notes, cautions, warnings, or tagging grounds
YELLOW	CAUTION	Informs personnel about an unusual condition. Use for notes, warnings, or cautions.	Tagging out an energy isolating device.
	REPAIR	Identifies equipment, which is defective and needs repair. Use for notes, warnings, or cautions.	
GREEN	GROUND PLACEMENT	Indicates placement of a ground on a circuit or equipment	For red or yellow tagging out requirements

5.2.2.3 **Lock and Tag Color Coding.** In the process of lockout/tagout/tryout, the color coding RED for danger, YELLOW for caution, and GREEN for ground placement will always be used as covered in Table 19. RED locks are used to prevent the operation of a hazardous energy control device, generally a switching device. All RED locks are keyed individually; that is they have no master key. Spaces on the tags are provided for defining the hazard, the caution, and the ground placement. These spaces should be filled in. The reverse side may contain additional data, including the name of the individual responsible for the tag.

5.3 **Grounding Provisions.** Comply with the requirements of OSHA standard 29 CFR 1926.269(n), Grounding and Protection of Employees. Grounding is used to limit dangerous potentials. Permanent grounding is provided as a part of any

electrical system to meet safety and design requirements. A ground system consists of a grounding connection, a grounding conductor, a grounding electrode, and the earth (soil) that surrounds the electrode or some conductive body which serves instead of the earth (an airplane's frame). A jumper connects conductors so that continuity is maintained. Bonding is the joining of metallic parts to form a conductive path. Temporary grounds are used so that work may be safely done on parts of the system that are temporarily isolated and cleared (de-energized). To be safe when working on a de-energized circuit it should always be de-energized, tested dead; isolated, tested dead; locked out and tagged; and grounded.

5.3.1 **Why Temporary Grounds Are Necessary.** Energized lines over 50 volts which have been opened and checked as showing no voltage should be considered as hot if they have not been grounded. Potential differences can occur on de-energized lines from any of the factors described in Table 20. Temporary grounding is essential for safety.

Table 20
Causes of Hazardous Induced Potential Differences

I. Potential differences caused by various line effects (such as induced voltages from adjacent energized lines and electrostatic build-up from wind action).

II. Lightning strikes anywhere in the circuit.

III. Fault-current feed-over from adjacent energized lines.

IV. Connection to an energized source through switching equipment, either by equipment malfunction or human error.

V. Accidental contact of the de-energized line with adjacent energized lines.

VI. Residual charge from power-factor correction capacitors or surge arresters.

5.3.2 **Equipotential (Single Point) Grounding.** Whenever possible install temporary grounding to provide an equipotential zone at the work site. An equipotential zone provides a zero ground potential gradient across a worker's body, thus preventing a harmful electrical current through the worker. Figure 1 shows the voltage gradient around a grounded energized object when a ground fault occurs. Figure 2 shows the current path across the worker's body that flows when there is a potential difference between two different points or an individual's contact with the ground or a grounded structure. Table 21 indicates where grounds are provided in the sequence of de-energized lockout/tagout/tryout steps.

WARNING

Follow these procedures in sequence.

Table 21
Temporary Grounding Connection/Removal Procedures

I. Select a ground electrode using either an established ground at the structure or a temporarily driven ground rod. The selection should minimize impedance and not introduce a hazardous potential difference.

II. Test the de-energized line/equipment for voltage by an approved tester, verified immediately before and after use as to its good working condition.

III. Visually inspect ground equipment. Check mechanical connections for tightness. Clean clamp jaws and conductor surfaces. Clean not earlier than 5 minutes before connection using a wire brush attached to a hot-line tool. Use of self-cleaning equipment is also acceptable.

IV. The ground end clamp of each grounding cable should always be the first connection made and the last to be removed. Hot sticks will be used if the grounded system and worker are at different potentials.

V. The conductor-end clamps of each grounding cable will always be connected last and removed first by hot sticks. Apply to the nearest conductor first and proceed outward and/or upward until all phases have been connected. Remove in reverse order. The practice of holding the cable near the base of the hot stick to lighten the load on the head of the stick is strictly prohibited. Instead, a co-worker should assist in installing heavy cables by holding the cable with another hot stick, or by using a “shepherd hook” with a pulley and a nonconductive rope to hoist the grounding cable into position.

5.3.3 **Placement of Grounds.** Grounds will be installed as close as possible to the work. Temporary grounding connection/removal procedures will be in accordance with Table 21.

5.3.3.1 **Approach Distances**

WARNING

Never approach closer than working distances given in Table 11 until after the line/equipment has been isolated, de-energized, tested, and properly grounded. Afterwards, avoid coming closer than 3 meters (10 feet) to minimize the hazard from step and touch potentials. This minimizes step and touch potential differences.

5.3.3.2 **Potential Differences.** Such potential differences occur from items such as down guys, ground rods, maintenance vehicles, and structure legs or ground wires

during the period in which they are bonded to temporary grounds. When it is absolutely necessary to work on or near these features, workers should use bonded conductive or insulated platforms, or approved insulated shoes to minimize the hazard from step and touch potentials. Bond separately grounded systems together if they can be simultaneously contacted.

5.3.4 **Temporary Grounding System Components.** Use grounding application (overhead, underground, substation) sets with ASTM F 855, Temporary Grounding Systems to be Used in De-energized Electric Power Lines and Equipment, grounding jumpers (clamps, ferrules, and clear 600-volt jacketed elastomer flexible cable) to the maximum possible extent.

5.3.4.1 **Grounding Clamps.** Use the alloy (copper or aluminum) matching the conductor or device to which it is attached and meeting or exceeding the current-carrying capacity of the associated cable. Use smooth jaw clamps on buses to avoid surface marring. Use serrated clamp jaws to bite through corrosion products for attachment to conductors or metal products. Self-cleaning jaws are recommended for use on aluminum. Never use hot-line clamps for grounding.

5.3.4.2 **Grounding Cable.** Cables will be preferably ASTM F 855, Type I of a minimum 2/0 AWG copper selected to meet the fault current necessary as given for 15-cycle substation duty and 30-cycle line use. See Table 22.

a. Derate these fault current by 10 percent when using multiple ground cables (which should all be of the same size and length).

b. Handle cables to avoid conductor strand breakage from sharp bends or excessive continuous flexing.

c. Avoid excessive cable length because an increased resistance can elevate potential differences and twisting or coiling reduces the cable’s current-carrying capacity.

d. Avoid very low temperatures; the clear jacket which allows checking for strand breakage will stiffen at low temperatures and split or shatter.

e. Cables prepared by facility personnel for grounding applications should be highly flexible but rugged.

Table 22
Maximum Fault Current Capability for Grounding Cables[1]

Cable size (AWG)	Fault time (cycles)	Root-mean-square amperes (copper)
2/0	15	27,000
	30	20,000
3/0	15	36,000
	30	25,000
4/0	15	43,000
	30	30,000

[1]These current values are the "withstand rating" currents for grounding cables and cables as per *ASTM F 855*. These values are about 70 percent of the fusing (melting) currents for new copper conductors. They represent a current that a cable should be capable of conducting without being damaged sufficiently to prevent reuse.

5.3.4.3 **Grounding Ferrules.** Use ASTM F 855, Type IV (threaded stud copper base compression type) when installed on grounding cables by facility personnel. Ferrules should have the filler compound vent hole at the bottom of the cable so that workers can visually check that the cable is fully inserted into the ferrule. Heat shrink or springs should be installed over a portion of the ferrule to minimize strand breakage caused by bending. In all cases, the manufacturer's recommendations should be followed. Do not use aluminum alloy ferrules as they will not provide a lasting snug fit. Check for tightness periodically.

5.3.4.4 **Grounding Cluster Bars.** Use to connect phase and neutral conductor jumper cables to the selected method of providing a ground electrode (pole ground wire, temporary ground rods, substation ground grid). Cluster bars should have an attached bonding lead. Provide temporary ground rods as given in Table 23.

Table 23
Temporary Ground Rod Minimum Requirements

I. Single rod installed to a depth of 1.5 meters (5 feet) below grade.

A. A minimum 16-millimeter (5/8-inch) diameter bronze, copper, or copper-weld rod at least 1.8 meters (6 feet) long.

B. A 1.8-meter (6-foot) long, screw-type ground rod, consisting of a minimum 16-millimeter (5/8-inch) diameter copper-weld shaft with a bronze auger bit and bronze T-handle, tightly connected to the rod.

II. Additional rods to provide additional 1.5 meters (5 feet) lengths below grade where required.

A. Install 1.8 to 2.4 meters (6 to 8 feet) apart while maintaining the 3-meter (10-foot) step and touch potential clearance.

B. Bond all rods together prior to installing other electrode connections.

5.3.5 **Temporary Grounding of Aerial Lines.** Ground by installing an overhead distribution grounding set. The grounding set provides a parallel low-level (milliohm) resistance path that limits the current flow through the worker to a very low (safe) value (milliamperes) thus limiting the potential across the worker to a safe value. If the ground resistance were in series with the worker life-endangering currents could flow through the worker under fault conditions. Avoid any ground connection that could provide violent whipping from wind action.

a. Figure 3 shows a single-point ground. Double-point grounds are sometimes utilized but single-point (equipotential) grounding is the preferred method. If double-point grounding is necessary, install the temporary grounds at least one span away from the work site because the grounding cables may violently move during a fault condition.

b. An incorrect multi-point ground is shown on Figure 4.

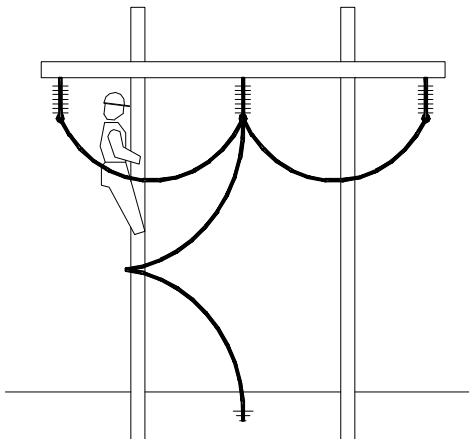

Figure 3
Correct Single-Point Ground

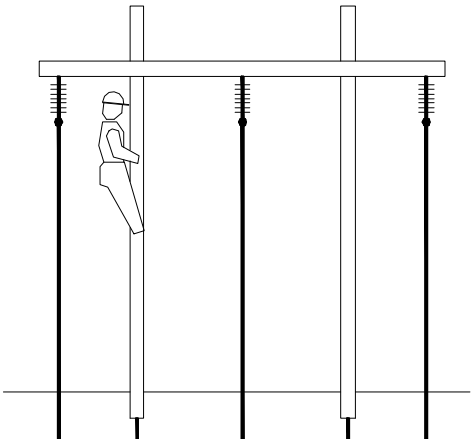

Figure 4
Incorrect Multi-Point Ground

5.3.6 **Temporary Grounding of Substation Current-Carrying Equipment Components.** Ground de-energized current-carrying components of substation equipment before approaching them within working clearance distances given in Table 11. Grounds should be placed as close to the equipment as practical (see distance D1 on Figure 5) to minimize the inductive voltage loop (see distance D2 on Figure 5) formed by the ground cable and the worker. See Tables 24 and 25. Special precautions are needed during oil handling (Table 26) to prevent the buildup of hazardous electrical charges.

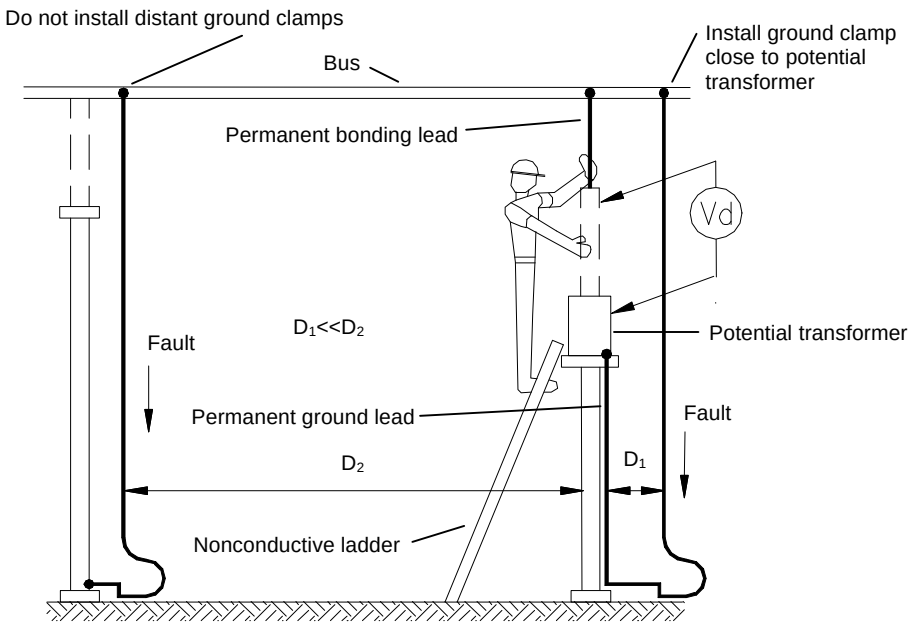

Figure 5
Substation Temporary Grounding

Table 24
Substation Protective Grounding Procedures

I. Check validity of permanent equipment grounds.

II. Install a protective ground cable and bond to a grounded structure member or to a common copper equipment bushing lead for equipment being worked on.

III. Apply personal protective grounds before working within Table 11 clearance distances on substation equipment including:

- A. Bushings
- B. Buses
- C. Capacitors
- D. Circuit breakers
- E. Instrument transformers
- F. Power transformers
- G. Switches
- H. Surge arresters

Table 25
Grounding of Substation Equipment

I. Tanks. Grounds should be in place (see Table 26) before a tank is opened and the insulating medium (oil/gas) is changed. This does not apply to sampling.

II. Ground switches. No type of switch may be used to maintain personal ground continuity.

III. Capacitors.

A. Allow at least 5 minutes between opening of the capacitor switching devices and the closing of the ground switch on a fully charged capacitor bank.

B. Allow at least 5 minutes after the ground switch is closed before installing protective grounds.

C. A capacitor bank should remain de-energized for at least 5 minutes before it is re-energized.

D. The time required for these maneuvers should be explicitly expressed in switching orders involving capacitor banks.

IV. Surge arresters. Surge arresters should be disconnected and discharged using grounding cables.

V. Grounding transformers. Grounding transformers should not be worked on unless de-energized and properly grounded. Phase reactors should be isolated from all energized sources and grounded before being worked on.

VI. Bushings.

A. Bushing leads may be disconnected from bushing terminals as necessary to permit equipment testing that requires the equipment to be ungrounded.

B. Use a hot stick to connect test equipment and re-establish the ground as soon as the test is completed.

C. Following an applied potential test ("Hi-Pot"), ensure the ground remains in place for a period at least two times the duration of the test period.

D. Work clearances and grounding instructions for the test equipment will be in accordance with the manufacturer's recommendations.

VII. Separate grounds. Install separate grounds for each isolated section of the de-energized circuit if a hazard exists when working in a de-energized area of a substation where there is one or more physical breaks in the electrical circuit.

Table 26
Grounding of Equipment During Oil Handling

I. Oil system.

A. Bond apparatus tanks, conductive hoses, pumping or filtering equipment, drums, tank cars, trucks, and portable storage tanks to the station ground mat.

B. Connect the supply end first and disconnect it last to prevent possible arcs near the source such as oil trunks, tank cars.

II. Equipment conductors. Bond exposed conductors, such as transformer or circuit breaker bushings, or coil ends or transformers where bushings have been physically removed, to the same grounding point.

5.3.7 **Aerial Lift Truck Vehicle Grounding.** Ground vehicles prior to conductor bonding, if at all possible. If not, use a hot stick to remove or install vehicle grounds on a grounded system bonded to the conductor. Ground in accordance with Figure 6 and Table 27.

WARNING

Do not begin work on overhead lines until vehicle is grounded/bonded.

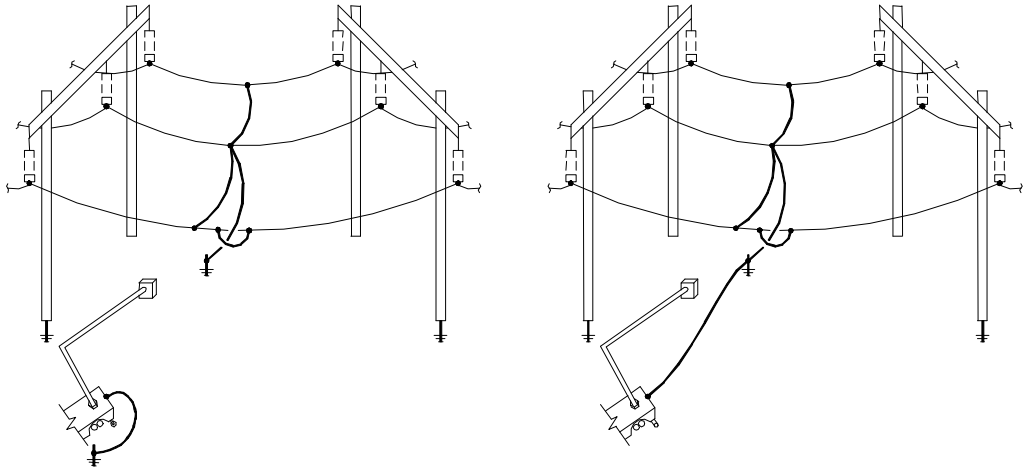

Insulated aerial lift Uninsulated aerial lift

Figure 6
Insulated and Uninsulated Aerial Lift Vehicle Grounding Connections

Table 27
Procedures for Grounding Insulated and Uninsulated Aerial Lift Trucks

I. Insulated boom vehicles

A. Bond the vehicle to a separate driven ground rod located about midway on one side and as close to the vehicle as practical.

B. If possible, keep insulated vehicles and their ground rods at least 3 meters (10 feet) away from the structure grounding system to minimize step and touch potentials.

C. If workers can simultaneously contact two or more separately grounded systems, the systems will be bonded together.

II. Uninsulated boom and other electrical work vehicles. Bond the uninsulated boom and all other vehicles directly involved in electrical work to the grounded system. Use a grounding cable rated for the maximum available fault current.

III. Tensioning vehicles

A. Vehicles used to pull and hold tension on the conductor or overhead ground wire should be properly bonded to a structure ground or a temporary ground rod.

B. Stay on the vehicle or at least 3 meters (10 feet) away from the vehicle ground when possible.

5.3.8 **Temporary Grounding of Underground Lines.** Ground all possible sources of power (including transformer backfeed). Omission of grounds will be permitted only if their application decreases the work hazard. Install protective grounds at equipment terminations or ground cables by spiking (using an approved tool) prior to work on cables

5.3.9 **Opening or Splicing De-energized Conductors.** Conductors may be spliced at ground level, from aerial lift equipment utilizing ground mats (uninsulated aerial lifts), or from insulating platforms (insulated aerial lifts). Grounding for conductive or insulating platforms is shown on figure 7. Install all grounding jumpers with hot sticks. Steps in providing safe grounds are given in Table 11. Remove in reverse order as installed. Ground any mobile equipment. Stay 3 meters (10 feet) away from grounded items and step onto equipment or platforms as quickly as possible to minimize any adverse step and touch potentials.

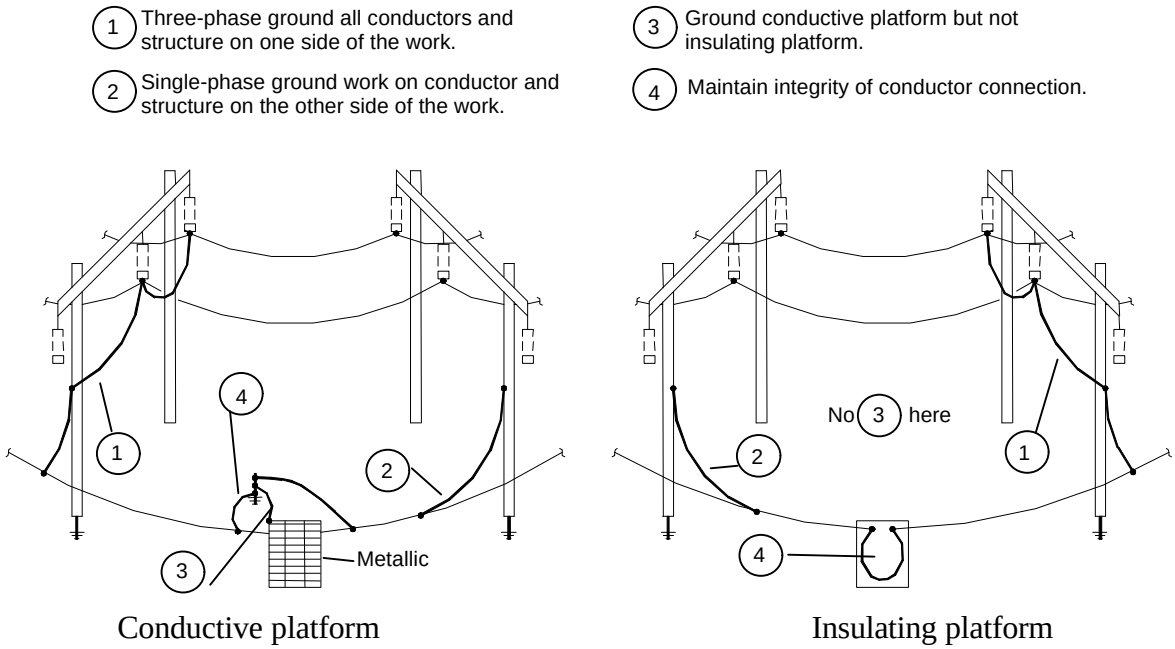

Figure 7
Using a Conductive or Insulating Platform for Opening/Closing De-energized Overhead Conductors

Table 28
Stringing/Removing Conductor Ground Locations

I. General.

A. Ground all stringing equipment such as reel stands, pullers, tensioners, and other devices.

B. Provide a safety barrier around the equipment.

II. Running ground. Install a running ground between pulling and tensioning equipment and their adjacent structures.

III. Stringing blocks.

A. Ground stringing blocks at first and last structures, and at least every 3.2 kilometers(2 miles) in between.

B. Ground stringing blocks at each structure on both sides of an energized circuit being crossed.

C. If the design of the circuit interrupting devices protecting the lines so permits, the automated reclosing feature of those devices should be made inoperative.

5.3.10 **Grounding for Stringing and Removing Lines.** Locate grounds to meet requirements of Table 28 and Figure 8. After conductor pulling, locate grounds in accordance with Table 29.

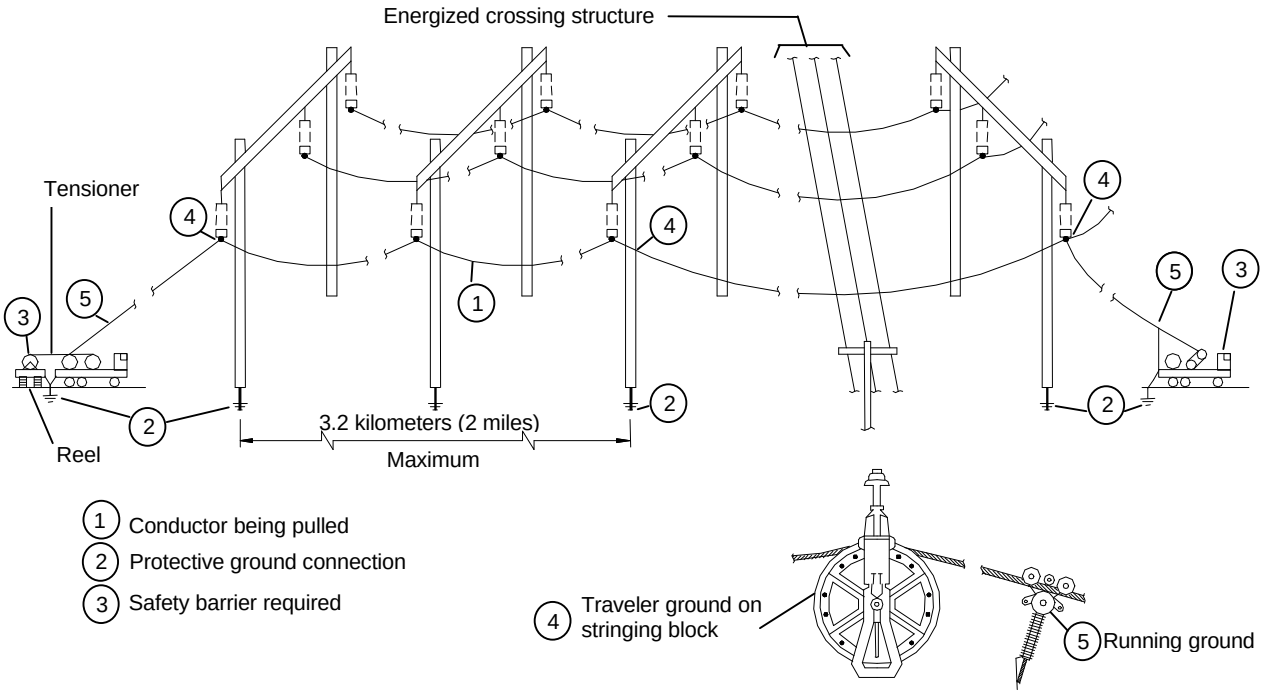

Figure 8
Composite Stringing/Removing the Temporary Protective Grounds on Overhead Conductor Lines

Table 29
Conductor Ground Location After Pulling

I. Structure grounds A. Ground at each structure next to intermediate deadends of the stringing operation. B. Ground at each structure where and while work (including clipping-in) is being performed on or near the conductor. **II. Removal.** Remove grounds as the last phase of finished aerial installation.

5.4 Energized Electrical Line Work

WARNING

Energized line maintenance should have been approved by the Public Works Officer or other designated authority (per local designation) and considered necessary to support a critical mission, prevent human injury, or protect property. Observe approved work methods, equipment prework procedures, and general job-in-progress procedures. No work may be performed during adverse weather conditions (ice storms, high winds, electric storms) unless there is an emergency and the work has been approved. See Tables 13, 14, and 15 for number of qualified workers.

5.4.1 Permitted Electrical Line Work Methods

WARNING

Only the approved methods given in Table 30 can be used by facility line workers in performing electrical line maintenance.

Table 30
Categories of Electrical Line Maintenance Work

Line potential[1]	Worker insulation	Worker protective methods	Approved for use
Ground	None	De-energize, isolate, lockout/tagout/tryout, and ground[2]	Always
Intermediate	Isolated from grounded objects by insulating means	Use insulated aerial lifts/supports and insulated tools on energized lines	Requires specific approval
Line	Insulated from ground	Bonded to energized line for barehand work	Prohibited

[1]Refer to ANSI/IEEE 516, IEEE Guide for Maintenance Methods on Energized Pole-Lines for definitions.
[2]When lines are not grounded they are considered energized.

5.4.2 Voltage Levels and Approved Work Methods and Equipment

WARNING

Use the approved energized work methods given in Table 31 while maintaining the working distance requirements given in Table 11.

Table 31
Approved Energized Work Methods by Voltage Class[1]

Nominal ac voltage level	Work method
Up to 600 volts	Gloving by conventional work position or by structure mounting (ground potential)
0.601 to 7.5 kilovolts	Gloving from structure mounting or in an aerial lift bucket (ground potential)
7.6 to 15 kilovolts	Gloving from electrically insulated aerial lift bucket or platform (intermediate protection) or gloving and use of live-line tools from structure mounting or an aerial lift bucket (ground potential)
15.1 to 36 kilovolts	Gloving and use of live-line tools from an electrically insulated aerial lift bucket (intermediate potential)

[1]Applies to de-energized line work until lines have been grounded.

5.4.2.1 **Rubber Goods.** Use insulating (rubber) goods meeting the requirements of ASTM F 18 standards with color coding meeting the requirements of Table 3. Use leather protectors over rubber gloves.

Note

Inspection of rubber protective goods should be in accordance with ASTM F1236, Guide for Visual Inspection of Protective Rubber Products.

5.4.2.2 **Insulating Tools.** Use insulating tools meeting the requirements of Table 31 and ASTM F711, Specification for Fiberglass Reinforced Plastic (FRP) Rod and Tube Used in Live-Line Tools, and IEEE Std 978, Guide for In-Service Maintenance and Electrical Testing of Live-Line Tools. Use approved gloves and rubber insulating sleeves with hot-line tools. The use of hot-line tools without gloves to detect tool deterioration is prohibited. Complete instructions and regulations detailing correct use and maintenance of such tools/equipment should be available and reviewed as a part of the work procedures. At least two workers, fully qualified for the voltage range (including other conductors within reach) should be available.

Table 32
Insulating Tools for Electrical Workers

Minimum test values			
Tool material	OSHA acceptance[1]	IEEE in-service[2]	Use
FRP	0.3 meters (100 kV/foot)	0.3 meters (75 kV/foot)	Preferred[3]
Wood	0.3 meters (75 kV/foot)	0.3 meters (50 kV/foot)	Phase-out[4]

[1]Test values manufacturers should certify for acceptance by buyer.
[2]Test values required after acceptance and tested after use in the field. Electrically test at intervals of not more than 6 months for tools in frequent use. Electrically test at intervals of not more than one year for tools stored for long periods of time.
[3]All new tools will be FRP.
[4]Replace wood hot line tools with FRP tools.

5.4.2.3 **Insulating Guards.** Use insulating plastic guard equipment meeting the requirements of Tables 33 and 34; ASTM F712, Test Methods for Electrically Insulating Plastic Guard Equipment for Protection of Workers; ASTM F 968, Specification for Electrically Insulating Plastic Guard Equipment for Protection of Workers; and ASTM F 15684, Specification for Structure Mounted Insulating Work Platforms for Electrical Workers.

Table 33
Common Classification for Plastic Guards

Common classifications for plastic guards			
Installation	Conductors	Structure/apparatus	Special
Attached hot stick Eye for removable hot stick Rope loop or equivalent for gloving or hot stick	Line guards Line guard connectors Insulator covers Deadend covers Bus guards Bus “T” guards	Pole guards Ridge pin covers Switchblade covers Arm guards Cutout covers Crossarm guards	Shape Size Attachment More stringent electrical requirements

Table 34
Insulating Plastic Guards/Platforms for Electrical Workers

Class	Guard rating for accidental brush contact					Criteria
	Maximum use rating kV (60 Hz)		Proof test withstand voltage (in-service testing)			
	Phase-to-phase[1]	Phase-to-ground	Phase-to-ground kV 60 Hz	dc	Duration, minutes	
2	14.6	8.4	13.0	18	1	No flashover other than momentary as a result of too close spacing of electrode
3	26.4	15.3	24.0	34	1	
4	36.6	21.1	32.0	45	1	
5	48.3	27.0	42.0	60	0.5	
6	72.5	41.8	64.0	91	0.25	

[1]Cover-up materials are tested at values greater than the 60 Hz use maximum phase-to-ground values. The maximum use phase-to-phase values relate to guarded-phase-to-guarded-phase. The units are not rated for bare-phase-to-guarded-phase potentials.

5.4.3 Prework Procedures

WARNING

Do not start work until the requirements of Table 35 have been completed.

Table 35
Prework Procedures

I. Work Approval. Obtain energized work approval.

II. SOP/JHA preparation.
- A. Determine existing condition.
- B. Determine the voltage rating of circuits to be worked on, distances to other energized lines, and location of work.
- C. Evaluate the following:
  1. If aerial lift equipment can be used.
  2. What personnel qualifications are needed for the work.
  3. If special equipment, tools, or hazard protection are needed.

III. Before starting work
- A. Review work and safety precautions with the crew before work begins (including tailgate briefing).
- B. Inspect tools/equipment before starting work.

5.4.4 General Job-in-Progress Procedures

WARNING

Observe the precautions given in Table 36 before proceeding with the procedures given in Table 37.

Table 36
Energized Work Precautions

C. Check that circuit automatic reclosing devices have been made inoperative while work is being performed.

D. All items of a voltage class lower than required for the work should not be available to the workers at the work site.

E. Exercise special care when working in the proximity of equipment such as fuses, surge arresters, and similar equipment, or where conductor checks indicate burns or other defects in conductors, tie wires, and insulators. Procedures may require that some equipment be bypassed for the duration of the work.

F. Comply with adverse weather and number of qualified worker requirements.

Table 37
Voltage Level Work Procedures

G. Voltage levels, 600 volts and below

H. Ground vehicles and aerial lifts in the vicinity of the work site.

I. Cover with approved protective equipment, or isolate with suitable barriers, energized phase and neutral wires, ground wires, messengers, and guy wires in the vicinity of the work. Apply covering to the nearest and lowest conductor first and remove in reverse order. See Tables 24, 25 and 26.

J. See Table 31 for work methods. Rubber gloves with leather protectors will be worn when entering a glove-required area and removed only after leaving that area.

K. Observe the working distance requirements of Table 11.

L. Protective equipment and vehicle grounds will be removed at the end of each workday.

M. Perform work on only one conductor at a time.

N. Tape or otherwise protect splices. Secure loose ends of conductors.

Table 37 (Continued)
Voltage Level Work Procedures

O. Voltage levels, 601 to 15,000 volts

P. Ground vehicles and aerial lifts in the vicinity of the work site.

Q. Cover with approved protective equipment, or isolate with suitable barriers, energized phase and neutral wires, ground wires, messengers, and guy wires in the vicinity of the work. Apply covering to the nearest and lowest conductor first and remove in reverse order. See Tables 24, 25 and 26.

R. Use approved live-line tools where required by Table 31. Rubber will be worn when entering a glove-required area and removed only after leaving that area.

S. Observe the working distance requirements of Table 11.

T. Protective equipment and vehicle grounds will be removed at the end of each workday.

U. Work performed should be under the direct supervision of a qualified work leader devoting full time and attention to the workers and the safety of their work.

V. Perform work on only one conductor at a time, although it is recognized that three-phase lifting tools may be used.

W. When moving an energized conductor with live-line tools, stay below the conductor until it is firmly secured in a safe working position

X. Do not raise, move, or lower conductors more than 0.45 meters (1.5 feet) when energized at 7,500 to 15,000 volts. Do not move conductors energized at more than 15,000 volts.

Y. Voltage levels, above 15,000 volts

Z. Except for the replacement of fuses and switching, work on energized lines or apparatus at this voltage range should be performed by qualified contract personnel. Follow the requirements of Table 31.

AA. Do not move conductors energized at more than 15,000 volts.

BB. Live-line work above 36,000 volts will be done by qualified contract personnel.

Section 6. SUBSTATIONS AND SWITCHGEAR

6.1 **System Familiarity.** Comply with the requirements of OSHA standard 29 CFR 1926.269(u), "Substations." A substation provides a protected area where equipment and lines permit switching power circuits and may allow transforming power from one voltage to another. A substation presents a potential safety hazard because usually only portions of the apparatus concerned can normally be de-energized. For safe operation, a thorough knowledge of the system, including aerial and underground line connections, is necessary. Systems are designed to be safe to operate if maintained properly. Operating safely requires maintenance to be done in a manner that eliminates risks and requires knowledge of the work area, its hazards, and its design operating rationale.

6.1.1 **Diagrams and Schematics**. Electrical diagrams and schematics of the substations should be available at the facility's engineering office and should be continuously updated. Diagrams and schematics should be studied to understand the operation of the systems and the location and connections of all circuits. Protective devices, alarms, and interlocking circuits all operate to protect the system. The worker should understand where, why, how, and when blocking protective devices will maintain safe working conditions. However, only a supervisor can authorize blocking.

6.1.2 **Engineering Guidance.** Diagrams and schematics should be kept up to date under the supervision of the facility's engineering staff. Staff guidance should be sought when performing maintenance on complex systems. Staff input is mandatory if the maintenance work involves additions or changes to the power and control systems involved.

6.1.3 **System Operation.** System single line diagrams should be permanently mounted at each substation. When lockout/tagout/tryout switching operations are performed, mimic buses on switchgear are helpful as a visual indication of the lines or equipment served.

6.1.3.1 **Protective Devices**. Protective devices within the system, such as relays and fuses, which are to be worked on or replaced, should retain respectively their correct coordination settings or be of the proper size and type. Always record previous data so that changes in system coordination are not made.

6.1.3.2 **Alarms.** System alarms, if blocked during maintenance, should be returned to their correct operating conditions.

6.1.3.3 **Interlocking.** Interlocking is provided to maintain proper electrical operation in the case of a circuit loss or switching change. Interlocking provisions should be known so as to eliminate any dangers of electrical feedback from another source, possible paralleling of two unsynchronized sources, or other unsafe operations.

6.1.4 **Abnormal Conditions.** Any maintenance done after fault conditions have interrupted normal service, imposes more than normal maintenance risks. Faulty energized equipment and lines should always be de-energized before any work is done. All abnormal operating equipment and electrical components should be de-energized and tagged.

6.1.5 **Defective Equipment**. If an apparatus, which is to be worked on, is found to be in a dangerous condition or not working properly, it should be removed from service immediately and tagged. Then, a complete report of the condition of the equipment should be provided by the worker to his/her foreman or supervisor the same day.

a. Defective equipment removed from service, such as distribution, potential, and current transformers; capacitors; and surge (lightning) arresters should be positively identified by the supervisor before they are put in storage. Any existing defective equipment in storage or at any other location should also be identified.

b. Identify defective equipment by painting a large red X on the body, not on the top of the equipment. The red X should remain on such equipment until it has been repaired or until it has been properly disposed of.

c. It should be considered gross neglect of duty and willful disobedience of instructions for a worker to deface in any way the red X on defective equipment or to place such equipment in service while so identified. The worker in charge of repairing any piece of defective equipment should be the only person authorized to remove such identification and then only after all repairs have been made and the equipment has met all necessary tests.

d. In cases where defective or reclaimed equipment is repaired and tested by electrical facility workers, they may then remove the defective identification marking.

6.2 **Substation Work Area Control.** Control of the work area is essential for accident prevention. Procedures for specific maintenance may vary but certain rules are basic to all work.

WARNING

Guidance in the following section is basic to all work, do not deviate from this guidance unless specific rules are developed that are at least as protective as those presented above.

6.2.1 **Previsit Briefing.** A previsit briefing should be carried out to familiarize workers with the work area. The briefing will include the status of the equipment, what part if any is energized, location of grounds, what the limits of the working space are, what open switches disconnect the equipment from any source of supply, and system

operating aspects. If for any reason there is an interruption in the work, or conditions change, another conference briefing will be conducted to familiarize all of the workers with the new conditions.

6.2.2 **Clearance Access.** When entering an attended station, workers not regularly employed in the station should report immediately to the operator in charge, stating their names, offices, purpose of the visit, and their planned activities. For unattended stations, workers should be escorted by installation personnel. Unattended substations should always be kept closed and locked. The station key should be kept by an authorized person.

6.2.3 **De-energizing Work Areas.** When it is necessary to work on or near any electrical circuits or apparatus, the procedures in Section 5, as well as pertinent rules given in this section, should be carefully followed.

6.2.3.1 **Switching.** Station operators should notify maintenance workers before doing any switching that affects their work.

6.2.3.2 **Lockout/Tagout/Tryout.** Lockout/tagout/tryout and tagout all power sources and circuits to and from the equipment and circuits in the work area. All controls will be made nonoperative and all feedback circuits, such as from potential transformers or other sources, will be cleared.

6.2.3.3 **Barriers and Barricade Tape.** Approved temporary barriers will be placed between the space occupied by workers and the nearest energized equipment, both as a protection and as a reminder of the limits of the safe working space. The individual in charge of lockout/tagout/tryout is responsible for barricade locations and barricades are to be moved only under that person's direction. After the work is finished, that person will remove the barriers prior to releasing the completed work.

a. It is recommended that barricade tape be used to enclose work areas and to isolate temporary hazard areas. Only active workers may enter taped areas until the hazard has been corrected. A temporary hazard could be a faulty but energized line.

b. Tape should completely enclose the work area, be visible from all approach areas, and be at an effective barrier level. The area enclosed should be large enough to provide worker safety and arranged so any test equipment can be operated outside the taped area.

c. Temporary barriers and barricade tape will not be used as a substitute for guard railings, for work platforms, or for protection from holes in the floor. Information tags or other warning devices will be provided to identify a hazard that is not obvious.

6.2.3.4 **De-energizing Proof Testing.** All lines and equipment on which de-energized work is to be performed will be tested to be sure they are de-energized before protective grounds are applied.

6.2.3.5 **Work Area Grounding.** After indication that all circuitry in the work area is de-energized, provide protective grounds as covered in Section 5. Place grounds so that each ground is readily visible to at least one member of the crew. Stay clear of cables and connecting devices while grounds are being applied.

6.2.3.6 **Adjacent Energized Equipment Protection.** When work is to be done on or near energized lines, all energized and grounded conductors or guy wires within reach of any part of a worker's body will be covered with rubber protective equipment. Bare communications conductors will be treated as energized lines and will be protected accordingly.

a. Flexible blankets will not be used at grade level without protecting them from physical damage and moisture by means of a tarpaulin, canvas, or protective mat.

b. To avoid corona and ozone damage, rubber protective equipment will not be allowed to remain in place on energized lines or apparatus overnight or for more than one 8-hour period, unless approved by the supervisor in charge.

6.2.3.7 **Worker Protection.** Personal protective apparel will be worn as deemed necessary by the supervisor or foreman in charge, as required by standard operating procedures, as recommended by the manufacturer for the tool being used, or as otherwise directed in this handbook. Protective tools will be used as appropriate to the work being done.

6.2.4 **Working Area Housekeeping Checks.** Check the working area to assure safe conditions and eliminate or protect against such hazards as described below.

a. Equipment hazards such as lack of guards or safety devices.

b. Material hazards such as sharp, worn, slippery, corroded, or rough items or areas.

c. Work station weather hazards such as wind, rain, ice, or dust.

d. Arrangement hazards such as congestion, unsafe storage in place, or improper workers' tool provisions and storage.

e. Lack of fire prevention and first aid equipment and inadequate working equipment and tools.

f. Insufficient testing equipment, protective apparel and equipment, and safety forms and tags.

6.2.5 **Installation Precautions.** All apparatus and lines should be legibly marked for identification and to match diagrams and schematics before any work is done. Markings should not be placed on removable parts. Where permanent markings are not provided, temporary markings may be utilized on the understanding that follow-up permanent markings will be provided for all devices and circuits operating at voltage levels above those used for control circuitry.

6.3 **Checklist for Safety**

WARNING

The following minimum requirements are mandatory to ensure worker or equipment safety.

6.3.1 **Communication Channel Availability.** Some method of communication to summon emergency personnel or medical assistance should be provided and should be functional through the period during which work is performed.

6.3.2 **Lighting Level.** The lighting level will be sufficient for safe work. Temporary self-contained lighting systems will be provided where normal natural or installed lighting is not sufficient, available, or safe.

6.3.3 **Working Period.** Normally no worker will work more than a standard 8-hour period with suitable breaks. Under emergency conditions a maximum of 12 hours may be necessary but the work period will be preceded and followed by a minimum of 8 hours off.

6.3.4 **Personnel Requirements.** On all cases of specialized work a qualified person will provide technical direction. No one should work alone. Workers should be qualified to do the work in question; should be fully cognizant of all safety procedures and equipment conditions; and should be alert and in good health.

6.3.5 **Equipment Preparation.** Check that all control power has been de-energized and all stored-energy mechanisms have been discharged. All stationary (bolted or plug-in) nondrawout type circuit breakers should be de-energized on both the line and load side. All drawout circuit breakers should be checked to be sure that interlocks (which prevent the circuit breaker from being withdrawn in the closed position) have not been defeated or bypassed.

6.4 **Testing Safety.** Comply with the requirements of OSHA standard 29 CFR 1926.269(o), Testing and Test Facilities. When performing electrical tests at any

voltage the person in charge of the testing should, in addition to other applicable instructions in this handbook, take the following precautions:

a. Use only devices that have been checked and found to be properly calibrated both immediately before and immediately after the test.

b. When testing live circuits or equipment, all temporary leads used in testing should be securely supported to prevent interference with other workers or injury to the tester. Protect testing personnel and others (particularly their eyes) from flashovers.

c. When performing mechanical tests, keep the operating personnel and others at a safe distance or in a safe location by means of barricades, to prevent injury resulting from the failure of the equipment being tested.

d. Use an approved voltage detector when testing for blown fuses on low-voltage circuits. Do not use fingers as the test for blown fuses.

e. A test indicating absence of voltage on the secondary side of a transformer or regulator should not be considered as a positive indication of the absence of voltage on the primary side.

6.5 **Switching Safety.** Opening/closing a power switch may expose the operator to some degree of hazard. An accident may occur if a switch is closed when a fault is still present on the line. The supervisor, before writing the switching orders, should prepare the switching sequence and all load isolation requirements. All switches operated in the switching sequence should be correctly identified and the instruction manuals of the switches should be provided. The worker should read the instruction manual to be familiar with the switch operation. All safety steps listed in the instruction manual should be followed before opening/closing a switch.

WARNING

Switches may fail during switching operations, creating arc blast hazards. Wear fire resistant clothing and/or switching suits during these operations in accordance with Table 11 distances.

6.5.1 **Air Switches.** Most switches today are airbreak switches. Many switches cannot be opened if there is a load on the line, if there is a large transformer magnetizing current from transformer, or if there is a heavy charging current from an unloaded transmission line. Always know the interrupting capabilities of the switch you are opening or closing.

6.5.1.1 **Disconnect Switches.** Disconnect switches of the nonloadbreak type will not be used to interrupt loads and magnetizing currents, unless specific approval has been given that the disconnect will interrupt the current safely or unless the switch is of the

loadbreak type. Switch sticks providing the minimum working and clear hot stick distance are used to manually operate switches. They should be used for no other purpose. Always assume that disconnect switches are not of the loadbreak type, unless you have positive proof otherwise and then operate on the following basis.

a. Disconnect switches may be used with care to open a live line, but not under load.

b. Disconnect switches should be used with caution to open sections of de-energized lines, where these lines parallel other medium- or high-voltage lines. Under certain conditions induced voltages can build up in the de-energized line and can be dangerous to switching operations.

c. Be aware of dangers when using disconnect switches to open a tie line or to break two parallel medium or high voltage lines.

6.5.1.2 **Airbreak Switches.** Gang-operated airbreak switches equipped with arcing horns may be suitable for loadbreak operation, or they may be only capable of interrupting the magnetizing current of transformers, the charging current of lines, or to make and break line parallels. Airbreak switch use should be specifically stated. The handle of the switch should be of the permanently insulated type and be effectively grounded when operated.

a. Ground mats should be provided for the operator to stand on with both feet. Either fixed or portable small iron-mesh mats should be used. The mats should be electrically connected to the operating rod and the substation ground grid to equalize the ground gradient and prevent any potential differences in case of insulation failure or flashover. Rubber gloves should be worn by the operator.

b. The hinges of airbreak switches should be sufficiently stiff (and kept in this condition) so that when the blades have been turned into the open position they will not accidentally fall back on their line-side energized clips.

c. The switch should be inspected after it has been opened to see that all blades have opened the proper distance. Single-throw airbreak switches should be opened to the maximum amount. Double-throw airbreak switches should be opened so that the blades clear both sides of the switch by the same amount.

d. Locks will be provided for all airbreak switch operating mechanisms and they will always be kept locked, except when opening or closing the switch.

6.5.1.3 **Interrupter Switches.** Some interrupter switches are designed to be opened under load. Metal-enclosed loadbreak switches are used in place of circuit breakers as a more economical switching method.

6.5.1.4 **Inching.** Inching is an unauthorized method of opening manually-operated nonloadbreak disconnects in a gradual manner, when the operator believes there is no load current. Inching is dangerous and this practice is prohibited.

6.5.2 **Oil Switches.** The consequences of operating a faulty oil switch or closing into a faulted circuit with an oil switch are likely to be devastating and possibly fatal. Switching procedures should be developed at each facility to make sure that no energized oil switch is operated while workers are in the vicinity.

a. Unless the switch has been equipped to operate from a remote location at least 6 meters (20 feet) away, the switch should be completely de-energized before switching. Switch position and grounding conditions should be verified before operation. Many manufacturers recommend that no medium-voltage oil switch is to be operated unless routine maintenance, including oil testing, has been performed within the past year.

b. Oil switches should incorporate a mechanical stop to prevent inadvertent operation to ground. Any abnormalities or defects discovered in any oil switch should be reported to the supervisor.

6.5.3 **Similar Switching Sections.** When switch bays, cells, or compartments are similar to adjacent sections, the separation barrier between sections should be painted an appropriate color to prevent the possibility of pulling the wrong blade.

6.6 **Fusing Safety.** Always remember that a fuse is a single-phase device. Fuses can be subject to partial melting or damage by currents that may not be of sufficient magnitude to blow the fuse.

WARNING

Fuses may fail during handling if energized, creating arc blast hazards. Wear fire resistant clothing and/or switching suits when changing energized fuses in accordance with Table 11 distances.

6.6.1 **Fuse Handling.** Fuses should normally not be handled, except when they need to be replaced. Remove them completely and as speedily as possible. When replacing fuses in primary fuse cutouts, do not use your free arm to shield your eyes from possible flashes. Always use safety glasses. The person changing the fuses should stand firmly on a level surface and, where operating in an elevated position be secured with a safety harness to prevent a slip and fall if there is a flash. Fuse sticks should be used in all instances.

6.6.2 **Operation of Energized Fuses.** Open all lines protected with energized fuses in the same manner as for air switches. De-energize nonloadbreak installations. For loadbreak installations provide a time delay after fuse replacement, in order to allow the

fuse to interrupt any fault condition that was not corrected at the time of the fuse replacement.

6.6.3 **Open Fuse Holder.** Do not leave outdoor fuse holders open for an extended period of time, as water damage or warpage from the elements may make closing them dangerous or degrade their protective ability.

6.6.4 **Closed-Position Fuse Locking.** Follow the fuse and/or switch manufacturer's instructions, as appropriate, to be sure that the fuse is securely locked, latched, and held fast in a closed position.

6.6.5 **Bypassing.** Do not bridge fuses or fuse cutouts internally. Where it is necessary to bypass fused conductors, use plainly visible external jumpers and remove them as soon as possible.

6.7 Energy-Storing Protective Device Safety

CAUTION

Protective devices such as surge arresters, choke coils, and capacitors store electrical charges as a byproduct of their protective mechanism. This stored charge should be discharged to ground before such devices are to be considered de-energized. Always wear eye protection when de-energizing or energizing these devices.

6.7.1 **Surge Arresters.** A surge arrester limits overvoltages and bypasses the related current surge to a ground system that absorbs most of the energy. The overvoltage condition can be caused by a fault in the electrical system, a lightning strike, or a surge voltage caused by switching loads. All surge arrester equipment should be considered as loaded to full circuit potential, unless it is positively disconnected from the circuit. Be sure the permanent ground conductor is intact before any work is done.

6.7.1.1 **Surge Arrester Contact.** Substations with grade level surge arresters should always be provided with screens or fences to prevent possible contact while parts of the surge arresters may be alive. The screen or fence should have a gate large enough to permit the removal of individual units. The gate should be provided with a lock and the key should be kept by an authorized person. Surge arresters should never be touched, unless they are completely disconnected from all live lines and live equipment and until all parts have been discharged to ground and effectively grounded.

6.7.1.2 **Disconnecting Surge Arresters.** Horn gap switches should be fully opened and completely separated from all live lines and equipment, whenever it is necessary to work near a surge arrester. If the first attempt to disconnect a surge arrester

is unsuccessful, wait 2 or 3 minutes before making a further attempt so as not to cause an internal fault.

6.7.2 **Choke Coils.** Choke coils are inductors that operate in a manner similar to surge arresters, except that they operate on overfrequency rather than overvoltage.

6.7.3 **Capacitors.** Capacitors consist of electrical condensers housed in suitable containers. Power capacitors provide for power factor correction. Coupling capacitors are used for coupling communication circuits to metering circuits. Because capacitors can hold their charge, they are not electrically dead immediately after being disconnected from an energized line. Capacitors on electric lines should be provided with discharge devices for draining the electrical charge to 50 volts or less in 5 minutes, after the capacitors have been completely disconnected from the circuit.

6.7.3.1 **Capacitor Discharge Circuits.** The operation of these discharge units should not be depended upon for safety, since they may be burned out or otherwise not functioning as designed. Line capacitors removed from service for any purpose should be considered at full voltage or higher, until the terminals have been short circuited and discharged to ground by an approved method. Do not short circuit terminals until capacitors have been de-energized for at least 5 minutes.

a. It is not safe to use fuses or disconnect switches to disconnect large capacitor banks of 60 kilovolt-reactive single-phase, 180 kilovolt-reactive three-phase, and larger. Circuit breakers should be used.

b. After disconnecting all capacitor banks, wait 5 minutes. Short-circuit and ground all terminals. All operations should be performed using rubber gloves or a hot stick or both. On wye-connected banks, the neutral may or may not be floating. In either case, it should be grounded.

c. Safe practice requires that the ground and short-circuit placed on capacitors be left on until work has been completed. When working on or testing capacitors in the shop, the work area should be barricaded as a safety measure for other workers.

6.7.3.2 **Coupling Capacitors:** A little known characteristic of coupling capacitors makes them especially hazardous to personnel if not properly grounded. This characteristic is their extremely high resistance, which results in a long discharge period. During shipping or storage a coupling capacitor should always have a shorting wire. During maintenance, a grounding wire should be connected to each exposed metal terminal that anyone can contact. Grounding wires should be left in place for the entire duration of maintenance to ensure discharge.

6.8 **Instrument Transformer Safety.** Instrument transformers reproduce a primary circuit voltage or current in a low-voltage secondary circuit for use in metering or relaying the primary circuit.

6.8.1 **Voltage (Potential) Transformers.** These units provide a means of obtaining low voltage from a higher voltage circuit. To serve their intended purpose they are designed and selected within certain accuracy limits and burdens. Units procured as replacements should have characteristics identical with the original units. There are certain hazards inherent in the maintenance and removal of these units. A voltage transformer has a constant voltage maintained on both the primary and secondary, although there is a fixed difference between the two voltages. If by accident the secondary is short circuited, a very high current will flow in both windings, causing the windings to overheat very quickly. The case and one of the windings of the low-voltage side of voltage transformers should be grounded before energizing the transformer.

6.8.1.1 **Fuse Replacement**

CAUTION

Replacing a blown primary-winding fuse is potentially dangerous when the circuit to the voltage transformer is energized. The secondary fuses should be removed to prevent the possibility of energizing the voltage transformer from the secondary side. A thorough investigation should be made in either case to determine the probable cause of the trouble, before attempting to install a new primary-winding fuse. Ordinarily, trouble in the voltage transformer is apparent from visual evidence in the form of a smoked or burned case, damaged bushing, or the condition of the fuse.

a. Also, before any inspection or replacement is done, be sure the service to the primary side of the voltage transformer is disconnected.

b. A dark lamp, connected on the low-voltage side of a voltage transformer, is not a positive indication of the condition of the high voltage side. Voltmeters, in addition to lamps, should be connected to the low-voltage side. Lamps should first be connected while the voltmeter is used as an extra check.

c. On most modern switchgear a drawout arrangement usually automatically disconnects and grounds the transformers, when access to the fuses is necessary.

6.8.1.2 **Supervisory Requirements.** A supervisor should give instructions for replacing a blown primary winding fuse on a distribution-potential voltage transformer located within switchgear, or where it is impossible to use a standard 1.8-meter (6-foot) long puller. Whenever a circuit breaker or a sectionalizing switch is not provided to isolate the voltage transformer, the worker should report the situation to his/her supervisor immediately. The supervisor should arrange for a feeder breaker opening. Replacing primary fuses when the potential transformer is energized is not authorized.

6.8.2 **Current Transformers.** These units provide a method of obtaining a lower amperage at a low-voltage from a higher-voltage circuit. Current transformer cases and secondaries should be grounded before energizing any current transformer.

CAUTION

The main risk involved with the maintenance of current transformers occurs when the secondary side is unintentionally opened while the primary side is energized. Opening the secondary side causes a very high voltage to be set up in the secondary winding, which stresses the insulation and presents a serious personnel hazard.

6.8.2.1 **Circuit Opening.** The secondary circuit of a current transformer should not be opened while the primary side is energized. Before opening the secondary circuits of any current transformer, the secondary leads should be short-circuited and grounded at some point between the current transformer and the location at which the secondary circuit is to be opened.

6.9 **Power Transformer and Regulator Safety.** Power transformers change voltage levels. Voltage regulators apply needed control for variations in loads whose effect on line-voltage drop exceeds that which is acceptable. Both require regular servicing but their protective and circuit disconnecting means are not necessarily similar. Refer to Section 7 for additional power transformer safety requirements.

6.9.1 **Power Transformers.** Consider all transformers energized and at full voltage, unless they are disconnected from primary and secondary wires, or unless they are disconnected from the primary wires and then short circuited and grounded. The secondary neutral will be considered a sufficient ground, provided there is a grounding conductor that is interconnected with the common neutral, the transformer case, and a ground electrode. Always check continuity of this ground connection. When removing transformers, the case and neutral grounds should be disconnected last.

WARNING

Under no conditions should transformer covers or handhole plates be removed, nor should any work be done on the inside of transformers until these instructions have been complied with.

a. When transformers are installed or replaced, the secondaries will be checked for correct voltage and, where applicable, for phase rotation.

b. When transformers are installed, and before they are energized, the ground connection will first be made to the case and to the neutral when applicable.

c. When working on or in the vicinity of any three-phase wye-connected transformer bank, check whether the transformer neutral is grounded. If not grounded then the neutral is floating and it is possible to have full phase-to-ground voltage on the neutral.

d. Unless transformers are load-tap-changing (LTC) type, tap changers should be operated only when the transformer is de-energized. When re-energizing, maintain a safe distance of at least 6 meters (20 feet) away to assure that internal switching was successful.

e. When relieving pressure on transformers, the pipe plug, pressure relief device, or inspection cover plate will be loosened slowly, so that the internal pressure of the transformer will dissipate gradually. Pressure relief valves will not be opened when there is precipitation or high humidity, except on failed transformers and when re-fusing.

f. Transformers or tanks will not be entered unless forced ventilation or an air supply containing a minimum of 19.5 percent oxygen is present and maintained in the work area.

g. Energized pad-mounted transformers and equipment will be locked or otherwise secured when unattended.

h. Properly control connected leads or jumpers before transformers are raised, lowered, or repositioned.

6.9.2 **Voltage Regulators.** Voltage regulators are installed with bypass and disconnect switches.

WARNING

Never open or close a regulator bypass switch, unless the regulator is set on its neutral position and the control switch is open, or automatic control is otherwise inactivated in accordance with the manufacturer's recommendations. When regulators are maintained as spares in substations, their bushings should be short-circuited and grounded.

6.10 **Metal Clad Switchgear Safety.** Metal clad switchgear is inherently safe to maintain so long as manufacturer's instructions and the following rules are adhered to.

6.10.1 **Before Circuit Breaker Drawout Requirements.** Prior to the drawout of a circuit breaker:

a. De-energize switchgear (including control power) and ground as much of the switchgear as permitted by operating conditions.

b. Trip the circuit breaker open and discharge the stored-energy mechanism if provided.

c. Check that protective interlocks are functioning to protect against closed-position circuit breaker drawout.

d. Ensure that all crew members know you are racking out.

6.10.2 **Circuit Breaker Maintenance.** Access to switchgear terminals through portholes in circuit breaker cells will be limited to the following:

a. When both sets of portholes in a cell are de-energized, that is line and load or bus to bus.

b. After both are de-energized, the access to switchgear terminals through the portholes will be permitted for cleaning, inspecting, and maintenance of terminals and bushings.

c. Use an approved ground and test device for access to terminals. Such access may be for application of protective grounds, phase identification on de-energized circuits, and phasing tests on live circuits. The use of a ground and test device positively and easily grounds the incoming cables and the switchgear bus. It also permits easy external connection points to the bus or cable for testing.

6.10.3 **Safety Precautions After Circuit Breaker Maintenance.** After providing required maintenance of the racked-out mechanism, the following precautions will be taken as a minimum.

a. Check that the cubicle is free of foreign objects.

b. Check that control circuits are de-energized by pulling fuses on control circuits.

c. Ensure that the drawout mechanism is in the open position.

d. Ensure that all crew members are aware of that you are racking in.

e. Close the cubicle door before closing the circuit breaker

6.11 **Network Protector Safety.** A secondary network system provides a high degree of continuity of service in heavy-load density areas. A grid of interconnecting low-voltage cables is supplied by two or more medium-voltage feeders through transformers having secondary network protectors. Network protectors are used in large buildings with heavy loads since the loss of one point of supply does not cause loss of service.

6.11.1 **Closing Network Protectors**

WARNING

Do not close a network protector manually, unless specifically instructed to do so, and then only when it is certain that the medium-voltage feeder is in service and that the transformer is energized and in the proper phase relation. When closed by relay, the operation should be performed only by a worker properly qualified in maintenance of network protectors.

6.11.2 **Network Protector Maintenance Safety.** To ensure your safety follow these rules.

a. Always perform appropriate electrical tests using a three-phase network protector test kit, before performing any installation or operation of the network protector.

b. Network protectors are designed to operate within the current and voltage limitations given on their nameplates. Do not apply these units to systems with currents and/or voltages exceeding these limits.

c. To perform work on network protectors requires personnel with training and experience on energized equipment. Only qualified electrical workers, familiar with the construction and operation of such equipment and the hazards involved should be permitted to work on network protectors.

d. There are several interlocks on a network protector. They are for personnel and/or equipment protection. Under no circumstances should they be made inoperative.

e. Roll out the network protector's removable element before making any adjustments or doing maintenance of any nature.

f. Never energize the network protector without its arc chutes and barriers in place.

g. Always be sure that all network protector hardware is in place and bolted tightly before placing a network protector into its housing for operation.

h. Since network protectors are used where a large amount of power is distributed to heavy-load density areas, any short circuit at any point in the system involves very high fault currents. Extreme care should be exercised when installing or working on an energized network protector.

i. The extensive use of barriers and interlocks as a part of the network protectors, provides greater safety to maintenance personnel. Keep barriers in place and immediately replace any that have been broken. Although barriers and interlocks are provided, insulated tools and/or insulated gloves are required to remove the rollout unit from the enclosure, and to remove fuses, or at the initial installation of the network protector on the system.

j. Before performing maintenance or removing a network protector from service, de-energize the network protector.

6.11.3 After Network Protector Maintenance

Note

On the first trial operation, or on the first operation of a network protector after repairs have been made on its mechanism or circuit breaker, the door of the network protector should be closed, when practicable. Always have a network protector blocked open, when installing or removing secondary fuses, to prevent the possibility of the network protector closing automatically.

6.12 Storage Battery Safety

CAUTION

Electric storage batteries emit hydrogen and oxygen, particularly while being charged. This forms a highly explosive mixture.

a. Storage batteries are most often lead acid type but nickel-cadmium batteries are also used. Flood-cell (vented) technology or valve-regulated technology may also be installed. These different types have different charging/discharging characteristics and their hazardous emissions require different handling operations. NAVFAC MO-200, Chapter 14 covers their maintenance and operating requirements.

b. Smoking or the use of any open flame, such as torches, will not be permitted around batteries. When soldering or lead burning is done, the battery room should be well ventilated, the battery cell vent plugs should be removed, and the excess gas above the electrolyte should be blown out of those cells near the work area.

c. Cleaning batteries or terminals with brushes or other devices that may short out the cell will not be permitted. (The ignition of the hydrogen-oxygen mixture in cells by a spark from a short on terminals has caused cells to explode).

d. When making up electrolyte for storage batteries, a worker should always pour acid into the water. The reverse may cause an explosion.

e. When doing work on batteries where contact with the electrolyte can be made, a container with baking soda and water should be provided for workers to neutralize the electrolyte on hands and tools. A working eye wash should be available close to the batteries. If none is present or if the one provided is inoperable, a portable eye wash will be immediately provided for the workers' use.

f. Acidproof gloves, sleeves, aprons, and goggles should be worn by personnel while repairing batteries.

g. Do not store sulfuric acid in places where freezing temperatures can occur.

h. For further information on servicing and maintaining storage batteries, see the manufacturer's instructions.

6.13 **Safety Requirements for Phasing or Connecting of Circuits.** Use phasing testers when it is desired to tie two or more circuits together. Never tie two circuits together without first checking their phase relations on all phases.

Section 7. OVERHEAD LINES AND ASSOCIATED ELECTRICAL COMPONENTS

7.1 **Pole Linework Environment.** Comply with the requirements of OSHA standard 29 CFR 1926(q) “Overhead Lines.” The majority of the work will be done in an elevated position above ground level. Climbing aerial line structures such as poles may be required. Situations with limited structure access can prevent use of an aerial lift bucket truck. The structure design may not accommodate positive fall protection load requirements. Only workers who meet "Qualified Climber" requirements should be permitted to do work which requires climbing poles or trees. Each facility should establish “qualified climber” requirements both for facility personnel and for contract personnel. They should apply to all persons whose work involves climbing.

a. Physical fitness required for climbing should be documented not only by an annual physical, but also be validated by supervisory observation.

b. Climbing duties should be a part of routine job activities, not an occasional occurrence.

c. A minimum of 2 years of documented climbing training should be completed. Experience should include hazard recognition and hands-on-training incorporating appropriate safe climbing practices and rescue training.

d. Demonstrated proficiency is required on structure types similar to those that are to be climbed and should show that these structures have been climbed on a routine basis within the last 5 years.

e. A worker in training may function as qualified only when working under the direct supervision and observation of a "Qualified Climber."

7.2 **Aerial Lifts**

Note

Aerial lifts as defined in this handbook refer to electrically insulated bucket trucks. Aerial lifts should be constructed to meet the requirements of OSHA standard 29 CFR 1910.67, Aerial Device. Provide aerial lift safety as required by facility and OSHA safety practices.

7.2.1 **Operation of Aerial Lift Equipment Near Energized Electrical Facilities**

Note

Electrical workers may operate aerial lift equipment between the distances specified in Table 11 and the distances specified in Table 12 if all of the following conditions are met:

a. A job hazard analysis has been done.

b. A hot line order has been obtained.

c. The activity is being performed under the direct supervision of a designated person who is trained and competent in this type of work.

d. The distances between energized parts and the aerial lift equipment is monitored while the aerial lift equipment is being moved and/or repositioned.

e. The aerial lift equipment is grounded.

f. No one, other than necessary workers, are within 3 meters (10 feet) of the equipment during its operation. Workers are to perform their work while on the equipment; not from a position on the ground.

7.2.2 **Types of Aerial Lifts.** Aerial lifts include the following types of vehicle-mounted aerial devices used to elevate personnel to job-sites above ground.

a. Extensible boom platforms.

b. Aerial ladders.

c. Articulating boom platforms.

d. Vertical towers.

e. A combination of any of the above.

7.2.3 **Aerial Lift Manufacturing Requirements.** Aerial equipment may be made of metal, wood, fiberglass reinforced plastic (FPR), or other material; may be powered or manually operated; and are deemed to be aerial lifts whether or not they are capable of rotating about a substantially vertical axis.

Note

Aerial lifts may not be "field modified" unless such modification is certified by the manufacturer.

7.2.4 Aerial Lift Safety

CAUTION

Comply with safety precautions.

a. Aerial ladders will be secured in the lower traveling positions by the locking device on top of the truck cab and the manually operated device at the base of the ladder, before the truck is moved for highway travel.

b. Lift controls will be tested each day prior to use to determine that such controls are in safe working condition.

c. Only authorized persons will operate an aerial lift.

d. Belting off to an adjacent pole, structure, or equipment while working from an aerial lift will not be permitted.

e. Workers will always stand firmly on the floor of the bucket and will not sit or climb on the edge of the bucket or use planks, ladders, or other devices for a work position.

f. A body harness will be worn and a lanyard attached to the boom or bucket while working from an aerial lift.

g. Boom and bucket load limits specified by the manufacturer will not be exceeded.

h. The brakes will be set and outriggers, when used, will be positioned on pads or a solid surface. Wheel chocks will be installed before using an aerial lift on an incline, provided they can be safely installed.

i. Generally, an aerial lift truck will not be moved when the boom is elevated in a working position with workers in the bucket.

j. Articulating boom and extensible boom platforms, primarily designed as personnel carriers, will have both platform (upper) and lower controls. Upper controls will be in or beside the platform within easy reach of the operator. Lower controls will provide for overriding the upper controls. Controls will be plainly marked as to their function. Lower level controls will not

be operated unless permission has been obtained from the worker in the lift, except in case of emergency.

k. Climbers will not be worn while performing work from an aerial lift.

l. The insulated portion of an aerial lift will not be altered in any manner that might reduce its insulating value.

m. Before moving an aerial lift for travel, the boom(s) will be inspected to see that equipment is properly cradled and outriggers are in the stowed position.

7.2.5 Other Aerial Lift Requirements

CAUTION

Observe the following safety requirements.

a. The operating and maintenance instruction manuals issued by the manufacturer will be followed.

b. Shock loading (sudden stops or starts) of the equipment will be avoided.

c. When a boom should be maneuvered over a street or highway, necessary precautions will be taken to avoid accidents with traffic and pedestrians.

d. The operator will always face in the direction in which the bucket is moving and will see that the path of the boom or bucket is clear when it is being moved.

e. Workers will not ride in the bucket while the truck is traveling. (Exceptions: Workers may ride in the bucket for short distances at the work location if the bucket is returned to the cradled position for each move and the workers face the direction of travel.)

f. When workers are in the bucket of an aerial lift, the emergency brake of the vehicle will be set. Wheel chocks or outriggers will be used to provide added protection. When the vehicle is on an incline, wheel chocks will be used regardless of whether or not outriggers are used. The truck should sit approximately level when viewed from the rear.

g. Workers will not stand or sit on the top or edge of the bucket or on ladders placed in the bucket. Workers' feet will be on the floor of the bucket the entire time they are in it.

h. When two workers are in the bucket or buckets, one of them will be designated to operate the controls. One worker will give all signals, which will be thoroughly understood by all persons concerned.

i. When two workers are working from the bucket, extreme care will be taken to avoid one worker contacting poles, crossarms, or other grounded or live equipment while the second worker is working on equipment at a different potential.

j. In no case will more than one energized conductor or phase be worked on at a time.

k. The aerial lift, including workers in the bucket and all tools and equipment will be maintained at proper clearances from unprotected energized conductors. Safety requirements governing the use of hot-line tools, rubber goods, personal protective equipment, and general safe practices will also apply to work done from aerial buckets.

l. When using pneumatic or hydraulic tools in a bucket, the operator will be sure that hoses or lines do not become entangled in the operational controls or contact adjacent energized conductors.

7.2.6 Bucket Safety Precautions

Note

Safety will be maintained by observing daily the following requirements before any work is done.

a. Remove water accumulation from the bucket. The bucket interior should be dry during use.

b. Wipe exposed insulation of bucket and boom clean with a dry cloth at the start of each day.

c. Inspect visible hydraulic hoses for chafing and then inspect hoses and fittings for leaks with the system under pressure.

d. Inspect wire cables for frayed strands and secure attachment.

e. Inspect the bucket safety harness assembly for good condition.

f. Verify that the most recent dielectric test for the bucket and arm occurred within the last 6 months.

g. Examine the exposed insulation of an insulating boom for cuts, unusual discoloration, or other signs of damage prior to use or at any time damage is suspected.

h. Inspect the remaining portions of booms, sheaves, cables, fittings, bucket, and bucket liner for defects.

7.2.7 **Insulated Buckets**

Note

Insulated buckets are required for work in accordance with Table 31. An insulated bucket of an aerial lift is provided with a conductive bucket liner.

a. The liner, usually a metallic screen, should completely surround the bucket walls and floor to provide electrostatic shielding for the occupant. Tools and other equipment carried in the bucket should be stowed carefully to avoid damaging the liner.

b. Insulated buckets should be subjected to Electrical Insulation tests in accordance with the requirements set forth in: the equipment manufacturer's technical manuals/instructions; NAVFAC P-300, Management of Transportation Equipment, Section 4.11.5; and American National Standards Institute ANSI A92.2, Vehicle-Mounted Elevating and Rotating Aerial Platforms. Insulation tests should also be conducted each time a higher voltage (than the insulated bucket is certified for) is worked, and when conditions indicate a need for insulated tests. Records of all tests should be maintained. Work operations will be suspended immediately upon any indication of a malfunction in the equipment.

7.2.8 **Aerial Lift Maintenance**

Note

Perform periodic maintenance in accordance with the manufacturer's operations and maintenance manual. Perform electrical tests on insulation no less than every 6 months.

7.3 Pole Handling Operations

CAUTION

Precautions are necessary in handling poles safely. Poles are long, heavy, and preservative-treated, thus they pose hazards to the workers involved in installation and dismantling operations. Any mistreatment of poles during installation will degrade their ability to meet service requirements and endanger those workers who climb them.

7.3.1 **Direction of Aerial Lift for Installations.** The foreman should direct the handling of poles and give all signals when poles are being lifted or handled. Poles should, whenever possible, be handled starting from the top and the end of the stack. Workers should roll poles away from them using cant hooks or bars. Poles should not be caught with cant hooks while in motion. Whenever possible, carrying hooks should be used when carrying poles.

7.3.2 Pole Contact Precautions

WARNING

Creosote, which is usually applied to poles as a preservative, can cause skin burns on contact. The following precautions should be taken to avoid burns.

a. Never roll up sleeves when handling poles.

b. Always wear gloves, and keep your neck well covered with a collar or a handkerchief.

c. Always keep trousers well down over your ankles as much as practical.

d. Never rub your eyes or wipe perspiration from your face with your hands or shirt sleeves when they have been exposed to creosote.

e. Where direct contact with creosote is apt to occur, the hands, arms, and face may be rubbed with a preparation made up of one part gum acacia or gum tragacanth and three parts lanolin. If this preparation cannot be obtained, satisfactory protection can be provided by petroleum jelly (Vaseline). First aid treatment should be obtained immediately if you come in body contact with creosote.

7.3.3 **Facility Receipt.** Poles are usually shipped to the facility's pole storage yard on flatbed cars, on which they are secured with skids, stakes, slings, and bindings. Shipping removal

is safe if done properly. The principal objective is to unload poles so that none are broken and so that the poles do not roll onto any worker.

a. Skids, rope lines, and slings should preferably be wire rope having a diameter of 12.5 to 16 millimeters (1/2-inch or 5/8-inch). These should be inspected to ensure they are sufficiently strong enough for the operation.

b. All binding wire, stakes, and other fastenings will be inspected for weakness or breakage before unloading.

c. Always place necessary lines to restrain loads when stakes and binding wires are cut.

d. The supervisor will determine that all possible persons are safely in the clear before binders or stakes are cut.

e. Binding wires should be cut with long-handled wire cutters. Never cut binders from the top of the load.

f. Only one person should be permitted on top of a loaded car at a time. No one should be allowed on top of a carload of poles to cut wires or after any wires or braces have been cut or removed.

7.3.4 **Ground Handling**

CAUTION

Once on the ground the poles can be positioned by the use of cant hooks. Special precautions should be taken while using these hooks.

a. Hooks should be sharp and should be protected when not in use.

b. The hook bolt should be inspected occasionally to detect wear. When a worn hook bolt breaks in use, a sudden and severe fall can result.

c. Injuries may result when the handle breaks or the hook comes out. Therefore, make sure the hook is firmly set in the pole.

d. The cant hook is a one-worker tool and frequently breaks when two workers double up. If the job requires two workers, two cant hooks should be used.

e. Before moving the pole, make sure that there are no tripping hazards behind any workers.

f. Stand so the pole is rolled away from you. Pulling the pole toward you can allow the pole to roll on your foot or even crush your leg. Also watch to see that the pole does not roll up a hump, as the pole could roll back when the grip and position of the hook is changed.

7.3.5 **Temporary Pole Storage.** Storage of poles should ensure that they will not deteriorate because of mishandling.

a. Poles that are stored for considerable periods should be stacked above the ground on racks that provide sufficient ventilation and can be properly blocked to keep them from shifting or rolling.

b. Poles should never be stored with cross-arms, braces, steps, and hardware attached.

c. Poles should be stored according to size to make them as accessible as possible.

d. An area of at least 3 meters (10 feet) around stored poles should be kept free of grass and weeds. There should be sufficient space under the poles to permit removal of leaves and debris. The foreman is responsible for these activities.

e. Poles stored temporarily on or near roadways, before erection or removal, should be placed as close as possible to the curb or edge of roadway as is safe. Never store poles at points in the road where there are sharp turns. Place each pole so that its top faces the direction of traffic. Poles stored on highways should not have crossarms attached.

7.3.6 **Hauling Poles.** Pole hauling should be done so as not to endanger workers and/or the public.

a. Poles, after being loaded on a vehicle, should be secured in at least two places and in a manner that ensures poles will not be released in traveling over rough terrain. Never use a chain smaller than 9.5 millimeters (3/8 inch) in diameter.

b. A minimum of at least two people (a driver and a helper) should be assigned to haul a load of poles. The helper should assist the driver by watching traffic both from the sides and the rear. The helper should also see that there is ample clearance when turning corners, entering highways, or crossing intersections. If necessary, the helper should act as flagman to warn and guide traffic.

c. Poles should not be hauled at night except in emergencies.

d. Poles extending more than 1.2 meters (4 feet) beyond the back of a truck or trailer will have warning devices attached. Provide a red flag by day and a red light by night to the rear end

of the poles being hauled. The red flag or light should be visible in any direction. State highway regulations should be observed when poles are transported on state highways.

e. Poles temporarily dispersed along streets and highways should be laid near the curb or in parkways between the curb and sidewalk, where they will not interfere with traffic, driveways, or walkways. When laid on an incline, poles should not be placed where they will interfere with drainage. The foreman should decide whether or not danger signs by day and red lights at night are required.

f. When moving a pole by hand, with a pole cart or with the truck derrick, warn those nearby who might be struck accidentally. Station a worker with a red flag to warn or stop traffic as necessary.

7.4 **Pole Installation Requirements.** Poles will normally be installed for new aerial line construction by contract workers. However, facility-installed poles may be needed for short line replacements of storm-damaged lines or because of pole decay. These poles may be installed by either Navy or contract workers. Remember that poles and guys should be located relative to local facility property line requirements.

7.4.1 **Pole Holes.** If new poles are to be set adjacent to existing poles to be dismantled, new holes should be dug. Power tools are available for digging, such as power borers or augers and should be used by qualified personnel. Rock cutting drills are available, as a safer alternative to the use of explosives, where rock is encountered. Most facility-provided pole holes will probably be dug by hand when power diggers are unavailable or cannot be used.

7.4.2 **Digging Holes.** Digging pole holes does not involve any great hazard, but does contribute to a great number of minor injuries, such as eye injuries from flying dirt and rocks; blisters on hands from the use of hand tools (blisters can be partially eliminated by using gloves); and foot and leg injuries resulting from falling over tools left too close to the pole hole, particularly shovels that have been left turned up.

7.4.3 **Hole Covers.** Hole covers should be at least 750 millimeters (30 inches) in diameter. Covers may be made of 25 millimeters (1-inch) thick lumber with two cross braces not smaller than 25 by 100 millimeters (1 inch by 4 inches) in cross section. Four or five shovels of soil should be put on the cover after it is placed over the hole. Casings may be required in sand or swampy soil to prevent the sides of a hole from caving in. Casing covers are required if pole setting is not done immediately.

Note

Cover all open pole holes as soon as they are dug, except when the pole is to be set into the hole immediately after digging.

7.4.4 **Setting Poles**

CAUTION

Pole setting is a hazardous job even with the best equipment and experienced personnel. The methods authorized for setting poles are by piking, using the winch line method, or using a gin pole.

7.4.4.1 **Pike Pole Method.** Figure 9 illustrates the pike pole method. This is the earliest method of raising poles and should be employed when a truck cannot be brought in. A jenny initially supports the pole and a cant hook keeps the pole from rolling. The bumpboard protects the wall of the hole from being caved in by the pole butt. Pikers, lift the line pole, by punching into the pole the steel spikes of the pike poles.

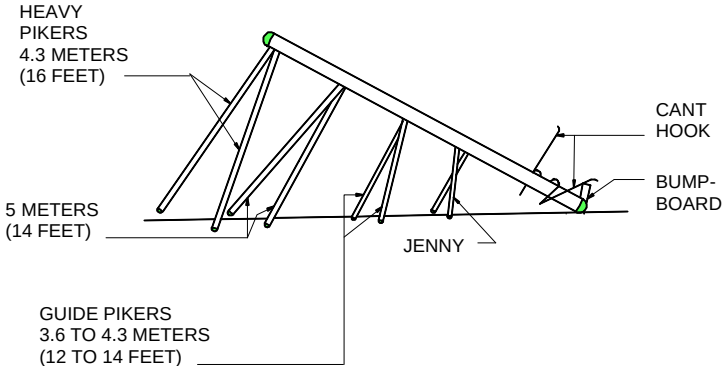

Figure 9
Pike Pole Method

a. Before setting a pole the foreman should ensure a clear working space and verify that all movable obstacles are removed from the area. Personnel should not wear safety harnesses and climbers when setting poles. Tools or other items may not be substituted for bumpboards. Always use a jenny to support the pole until it is high enough to use pikes. Only experienced workers should use the jenny. The angle of contact between the pole and jenny should be maintained as close to 90 degrees as possible.

b. At least three experienced pikers should be used in addition to the supervisor. The number of pikers required increases with the pole length as shown on Table 38. One person should handle the butt of the pole and a minimum of two side pikers are needed. Inexperienced workers used in this work should be thoroughly instructed on the hazards involved. A two-

legged jenny should be used. It is the responsibility of the supervisor to assure that all pole-lifting tools are always in good condition.

Table 38
Average Size of Crew Required to Raise Poles of Different Lengths by Piking

Pole length in Meters (feet)	Size of crew	Number of pikers	Number of jennymen	Number of people at butt
7.5 (25)	5	3	1	1
9.0 (30)	6	4		
10.5 (35)	7	5		
12.0 (40)	8	6		
13.5 (45)	9	8		
15.0 (50)	10	8		

7.4.4.2 **Winch Line Method.** Figure 10 shows the winch line method.

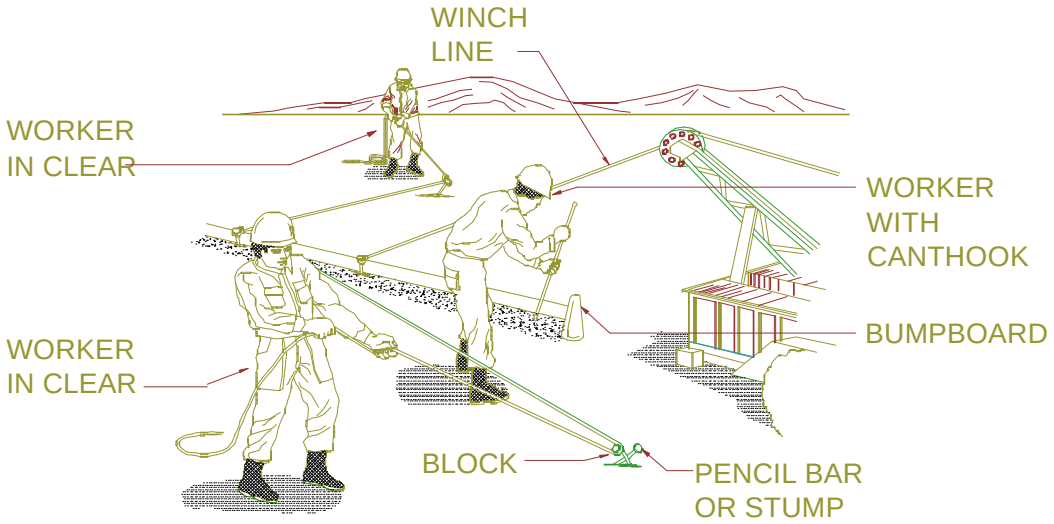

Figure 10
Winch Line Method

a. When erecting poles by truck winch and winch line, rig as shown with all workers in the clear. At least three experienced workers should be used in addition to the supervisor. For safe erection, the gins or maneuverable rigging assembly should have enough teeth to handle the pole. Pikes should not be used in combination with a winch.

b. Side guys used in setting poles or structures are attached to pencil bars driven into the ground. Tie lines or other guy lines should never be wrapped around any worker's body. The supervisor should concentrate on supervising the work to assure that it is being safely performed.

7.4.4.3 **Gin Pole Method.** In setting extra-heavy poles or those of 12.5 meters (45 feet) or longer, use a tackle block attached to another pole (either existing or specially set for the purpose of raising the new pole) rather than the pike pole method. The pole used as a gin (maneuverable rigging point) to raise the new pole, should be guyed sufficiently with not less than 16-millimeter (5/8-inch) diameter rope to hold it erect under the strain of the load. When the new pole is raised by car or truck, the temporary guy should be run from a snatch block at the bottom of the gin pole to a substantial anchor. This prevents the gin pole from slipping at the ground line. Otherwise the gin pole should be set in a hole 0.3 to 0.6 meters (1 or 2 feet) deep.

7.4.4.4 **Pole Setting Truck Precautions.** Pole setting trucks should be parked, when practicable, so that the steel boom will not be closer than 3 meters (10 feet) to energized overhead conductors. When the work is to be done around energized conductors and it is impossible to lower the boom sufficiently to be in the clear, the conductors should be de-energized before work is begun. When work is being done with the boom close to energized conductors, all personnel should not touch the pole and should keep away from the frame of the truck. Never touch (with bare hands or with any part of the body) a pole that is being set in an energized line. A cant hook or dry rope around the butt of the pole may be used to guide it into the hole.

7.4.4.5 **Energized Line Precautions**

WARNING

A lineman should be used to guide poles through energized conductors should have been qualified by training for this job.

WARNING

When a pole of any type is being set or removed between or near conductors energized at more than 600 volts, the pole, winch cable, and truck frame should be effectively grounded with protective grounds. Lines should be covered with rubber protective equipment to prevent poles from touching energized parts and, workers should use rubber gloves. Attach a protective ground to the frame of all winches. If the pole is to be erected by hand (pikes), the protective ground should be attached to the pole (using an approved grounding band) approximately 4.5 meters (15 feet) from the butt end. In all cases, exercise extreme care to keep the pole from contacting conductors.

a. Wood poles should not be considered as providing insulation from energized lines.

7.4.4.6 **Backfilling Around Poles.** Backfill the hole after the pole has been placed. Use the pikes to align the pole while backfilling. Pikes should not be removed until sufficient tamping has been done to prevent the pole from falling.

7.5 **Dismantling Poles**

WARNING

Many people have been fatally injured or permanently crippled from accidents during improperly performed pole dismantling.

7.5.1 **Minimum Pole Support.** Each pole should be guyed in at least three different directions by guy ropes before any work proceeds on the pole using the following procedure:

a. Make two turns around the pole with a sling and tie securely.

b. Tie three guy lines around the sling at the proper angles.

c. Insert pike poles under two sides of the sling well up the pole.

d. Snub off securely by pencil bars driven into solid ground or by any other substantial snub.

7.5.2 **Additional Pole Support.** Always check the pole to see if additional support may be necessary because of pole conditions or strains.

a. Determine the condition of the pole butt before removing guys or wires and support with additional pike poles or temporary guys if necessary.

b. When an old or reinforced pole is to be dismantled, guy the pole sufficiently to withstand any altered strain on it and to support the weight of personnel who are to work on it.

c. When changing the strain on a pole, the foreman should see that it is sufficiently guyed to stand the altered strain. The foreman should not permit workers to climb a pole that is under an abnormal strain. The foreman should be responsible for the placing of guys to prevent any pole from falling.

7.5.3 **Truck Restraining.** A truck equipped with an "A" frame and backed up to the pole can be used to restrain the pole. The top of the "A" frame can be tied by the winch line to the pole. The pole at the groundline level can be securely tied off to the truck.

7.5.4 **Pole Removal**

WARNING

When a pole is being removed, dismantle the pole before beginning excavation around the butt. Dismantling consists of removing all equipment and devices such as crossarms and insulators mounted on the pole. In locations where poles cannot be lowered with a rope or derrick, a guideline should be attached so that the pole falls in the desired direction. All members of a crew, who are not actually engaged in removal of a pole, should stand clear to avoid possible injury if the pole should fall. Where necessary, stop all pedestrians and traffic during pole removal.

7.6 **Climbing and Working on Poles.** Workers should be familiar with general rules for climbing poles and approaching the overhead work area; the impacts of climbing wood poles as opposed to steel towers; and the dangers of crossing structures from one side to another.

7.6.1 **Before Climbing Precautions**

WARNING

Except in emergencies or when unavoidable, do not work at the base of a structure or a pole while people are at work above. Before climbing a pole the worker should first determine and ensure:

a. What circuits are energized and at what voltage.

b. Any unusual conditions which might pose a hazard.

c. Types and positions of circuits and the direction of feeds.

d. The best climbing space to avoid all live wires, grounded wires, and signal circuits.

e. That there is an ample supply of rubber protective equipment on hand to completely protect the worker on the pole from all live wires, grounded wires, and signal circuits.

f. That not more than one worker will descend a pole at the same time. The first worker should be in place on the pole or down on the ground before the next worker ascends or descends the pole. When it becomes necessary for one worker to work above the other, they will exercise extreme care.

g. Before climbing poles, ladders, scaffolds, or other elevated structures; riding span wires, messengers or cables; or entering cable cars, boatswain chairs or similar equipment; the worker will first verify that said structure or device is strong enough to safely sustain his/her weight.

7.6.2 Type of Pole

WARNING

The type of pole to be climbed will affect the precautions that the worker should take in regard to climbing equipment and procedures. However all types of poles should be safe to climb, in terms of being strong enough to bear the weight of particular climbers and their tools and in providing adequate climbing space. Before allowing anyone to climb on a pole, the supervisor will ensure the pole is inspected and that it can be safely climbed based on the following determinations:

a. Age, treatment, and physical condition of each pole should be tested in accordance with the applicable provisions of MO-200, Facilities Engineering, Electrical Exterior Facilities. Poles unsafe for climbing should be reported to the foreman so that they may be braced or guyed before climbing.

b. Configuration of conductors or equipment on the pole should provide adequate climbing space.

c. Changes in stress resulting from removal of supporting conductors or guys do not affect the safety of workers.

d. Poles to be climbed are in such condition and are supported in such a way as to safely support workers on such poles. Pikes will not be used as a support method while personnel are working on poles.

7.7 Pole Climbing Equipment

WARNING

Usually pole climbing will be done on wood poles rather than on concrete or steel poles. The two major differences between these types of poles are that wood poles are not grounded poles (although they should not be counted as providing protective insulation) and climbing wood poles (along with trees) requires climbers (gaffs) rather than step bolts or ladders. All workers need to be provided with body harnesses and safety straps when climbing and while working more than 1.8 meters (6 feet) above ground level. Positive fall protection may also be appropriate.

7.7.1 Climbing Safety Equipment

Note

A full set of climbing equipment should be supplied to each worker who is authorized to climb. Never loan or borrow a set of climbing equipment.

a. Climbing equipment should be carefully inspected daily. Leather should be checked for cuts, cracks, and enlarged buckle tongue holes. Metal parts should be checked for cracks, wear, or loose attachments. Climbers (gaffs) should be regularly checked for proper cutting edges, length, and shape.

b. The foreman, or a properly delegated worker, will inspect all tools, safety devices, and other equipment weekly. Any item that is not considered safe will be condemned, regardless of ownership, and should not be used.

c. Body harnesses, meeting the requirements of OSHA Standard 1926.959, “Lineman’s Body Belts, Safety Straps, and Lanyards,” with straps or lanyards, should be worn to protect personnel working at elevated locations on poles, towers, or other structures. Body belts should not be used for fall arrest protection but may be used if the system is rigged as a part of a positioning device body harness system that limits the free fall to 0.6 meters (2 feet). If such use creates a greater hazard to the safety of the workers, other safeguards should be employed. Body harnesses and straps should be inspected before use each day to determine they are in safe working condition.

d. Positive fall protection. Provide positive fall protection where the strength of the pole (steel/concrete) permits meeting OSHA requirements. Exceptions are ascending or descending by a qualified climber or situations where a job hazard analysis so warrants. On wood structures consider adding position fall protection when transitioning obstructions, if a job hazard analysis indicates a fall arresting point will provide adequate strength.

7.7.2 Wood-Pole Climbing Equipment

Note

Equipment sets each consist of a body harness, a pole strap, and climbers (an assembly of gaffs, leg straps, and pads). The Edison Electric Institute provides an excellent document entitled "Use and Care of Pole Climbing Equipment" which should be used as part of the training for pole climbing certification.

7.7.2.1 **Climber Requirements.** Climbers should meet the following requirements:

a. Leg iron (shank) to be made of spring steel.

b. Gaff (spur) to be forged from tool steel.

c. Leg iron length, sizes range from 380 to 460 millimeters (15 to 18 inches) from instep to end of shank.

d. Leather straps, two each of 26 millimeters (1-1/4 inches) wide, at least 560 millimeters (22-inches) long.

e. Pads, for protection of calves.

7.7.2.2 **Climber Defects.** Climbers and pole straps or other leather items that have any of the following defects should not be used until repaired:

a. Cracked, dry, or rotten leather.

b. Leather which is worn thin.

c. Cuts or worn places which are of sufficient depth to weaken the leather.

d. Broken stitches or loose rivets at buckles, D-rings, or snaps.

e. Snaps which have weak springs behind the tongue, or loose rivets which hold the tongue.

f. Loose tongues in buckles.

g. Buckles, D-rings, or snaps that show considerable wear or which have been cracked or bent.

7.7.2.3 **Leather Treatment.** Leather equipment should be cleaned and dressed every 3 months. This period should be shortened when equipment is frequently wet from rain, perspiration, or covered with dirt or mud.

a. Wipe off all surface dirt and mud with a sponge dampened (not wet) with water. Never use gasoline or other cleaning fluids as they tend to dry out and harden the leather.

b. Wash leather with a clean sponge in clear lukewarm water, and a neutral soap (free from alkali), preferably Castile soap. Thoroughly wash the entire length of the leather and work the lather well into all parts. Place in a cool area to dry.

c. Leather should be oiled about every 6 months. Use a small quantity, about 20 milliliters (4 teaspoonfuls) of pure neatsfoot oil per set of equipment, and apply it gradually with the hands, using long light strokes while the leather is still damp from washing. Leave in a cool place to dry for 24 hours, and then rub the leather vigorously with a soft cloth to remove all excess oil.

7.7.2.4 **Storing Climbing Equipment.** When safety harnesses and straps are not in use, they should be stored in proper compartments on the electric truck or in other suitable places to protect them from being damaged. When stored, climbers should be wrapped in pairs and fastened with their straps.

7.7.2.5 **Conditioning Climbing Equipment.** Climbers, straps, and pads should be kept in good conditions at all times. Gaffs should be at least 26 millimeters (1-1/4 inches) long, measured from the point of the gaff to the point of contact with the stirrup on the under side. Sharpen climbers using a gaff shaping bit as follows:

a. Place the climber between wood in a vise with the leg iron horizontal and the gaff on the top side.

b. Use a smooth cut file and finish with a sharpening stone. Never grind with an emery wheel, as this takes the temper out of the metal.

c. File only at and toward the point of the gaff and only on the outside. Never file the front or flat side except for a slight touching up.

d. Do not file a long sharp point. The sharp part of the point should be about 3 millimeters (1/8 inch) long.

e. Never use a climber with a gaff shorter than 26 millimeters (1-1/4 inches) long, as measured on the flat side.

7.7.2.6 **Prohibited Climber Wearing Areas**

CAUTION

Climbers should not be worn when:

a. Working on the ground

b. Traveling to and from a job

c. Piking poles

d. Walking through underbrush or rough terrain

e. Riding in motor vehicles.

7.7.3 **Concrete/Steel Pole Climbing**. OSHA standard 29 CFR1926, Subpart M, Fall Protection requires fall protection for certain working heights above grade. Generally fall protection has been accepted as the use of a body harness. However with the development of positive fall protection devices, a positive fall protection system should be provided whenever the anchor point strength requirement can be met.

WARNING

Positive fall protection should always be considered.

7.7.3.1 **Fall Arresting Device Considerations.** A fall arresting device should always be considered whenever the worker will be working more than 1.8 meters (6 feet) above ground level on line or substation structures/equipment where a feasible anchor point is available. Workers should be secured for fall arrest, while climbing or changing work positions, and for position security while working in place. Where both hands are required for working from a ladder, the requirements for either fall arrest, position security, or both, will be applied dependent upon the working height.

7.7.3.2 **Fall Arresting Anchor Point.** A proper anchor point should be identified and evaluated by qualified personnel before an appropriate system can be selected. OSHA regulations indicate that pad eyes, bolt holes, and other sturdy structures, capable of supporting 2,200 kilograms (5,000 pounds) per attached worker, are acceptable.

7.7.3.3 **Fall Arresting System Provisions.** Positive systems all have in common an anchor point independent of the support method, a harness to hold the worker, and a connecting device between the anchor point and the harness.

a. Harnesses should only be used for the personal protective purpose for which they are designed. Their misuse could result in serious injury or death. In addition to fall-arrest harnesses, there are fall-arrest/positioning, fall-arrest/suspension, fall-arrest/retrieval, and retrieval/positioning harnesses.

b. The use of a harness over a belt is because of its impact limits. A belt provides only increased for impact forces up to 400 kilograms (900 pounds) while a harness has a higher force level of up to 800 kilograms (1,800 pounds). All items of the complete fall arrest system should be taken into account, not just the harness.

c. Manufacturer's instructions in regard to height and weight should be followed for sizing of the harnesses and their connecting devices and for inspection and maintenance of the complete systems. All equipment should be taken out of service and inspected for damage after being subjected to a fall impact.

7.7.3.4 **Climbers' Tools.** Workers authorized to climb should have a complete set of approved tools. The number of tools carried in tool belts should be kept to a minimum.

7.8 **Pole Climbing and Work Precautions.** Only after determination of the pole's safety, collection of necessary climbing equipment and work tools, and assurance that the line is de-energized and grounded, or that hot-line work is authorized to be carried out, can the worker start climbing.

CAUTION

Protect hands and arms by wearing gloves and long sleeve shirts.

7.8.1 **More Than One Climber.** If more than one worker needs to work on the pole at the same time, the first worker should reach working position before the next worker leaves the ground. Ordinarily, no worker is to work directly under another worker on the same pole, except in emergencies. When this condition is necessary, take extreme care to prevent tools or other objects from being dropped on the worker below.

7.8.2 **Wood-Pole Climbing Precautions.** Always proceed as follows

a. Seat the gaffs securely. Be especially vigilant when the pole is ice or sleet covered.

b. Use pole steps whenever they are available, but only after checking that they can be used safely.

c. Use the climbers carefully on the pole to avoid injury to another worker on the pole.

d. Every precaution should be taken to avoid weather cracks, checks, knots, shakes, rots, and hard places, which might cause gaffs to cut out. Remove any tacks or nails which may impede safe climbing.

7.8.3 **Concrete/Steel Pole or Tower Climbing Precautions.** Workers may be required to climb concrete/steel poles with the same equipment as wood poles. Climbing towers to work on obstruction lights, marker lights, and similar devices may be required. Before climbing the situation should be surveyed to get a good idea of what work is to be done and where the climbing will take place. Ice or wet weather conditions increase the hazards. Always make sure that gloves and shoe soles are in good condition and free from grease or other inhibitors. Rough cord sole shoe or boots are recommended. Careful inspection and attention should be given to the safety harness's condition and positioning, as steel or concrete surfaces can cause a harness to wear out or break due to cutting action. Climbing safety devices should be used where installed.

WARNING

The great majority of falls are due to slick work gloves or slick shoe soles.

7.8.4 **General Pole Climbing Precautions.** The pole climber will observe the following rules.

a. Both hands should be free for climbing.

b. The worker should not stand on mail boxes, signs, fire alarm boxes, or similar equipment which may be attached to the pole or located near it.

c. Racing up and coasting down poles is positively prohibited.

d. Safety straps should not be attached to the pole while climbing or descending the pole except in conditions of high winds or severely inclement weather when emergency work is justified.

e. When climbing over slippery or ice-coated crossarms or timbers, where the hands are apt to slip off, two safety straps should be used. The use of rope safeties is prohibited.

f. All signs should be removed from a pole before any worker climbs or does any work above them on a pole. It is not desirable to have signs on poles, but street signs may be necessary at times. Where street signs are removed they should be replaced after all work is completed.

g. Climb on the high side of a raked or leaning pole if possible, but do not climb on the side where the ground wire is attached. Avoid grasping pins, brackets, crossarms, braces, or other attachments that might pull lose and cause a fall.

h. Never slide down any type of pole or any guy wire. If it is impossible to use climbers for ascending and descending such places, ladders or other means should be used.

i. Do not ride overhead guys or cables. (This does not apply to cables installed for river crossings or otherwise intended to support workers in suitable conveyances.)

7.8.5 **Precautions While Working on Poles.** Observe the following safety precautions. Safety harnesses should be used by workers at all times while handling wires or apparatus on a pole or structure. The following measures should be taken:

a. Be careful in attaching snaps to D-rings. Visually ensure that the snap keeper is fully closed in the correct ring before any weight is applied to the safety strap.

b. Always be sure that safety straps are not twisted while in use.

c. Never depend on a crossarm or crossarm pins and braces for support.

d. Never attach safety straps above the crossarm in the top gain or around insulator pins, crossarm braces, transformer hangers, pole steps, or guy wires. If there is no crossarm in the top gain, the strap should not be placed closer to the top of the pole in a manner that assures there is at least 0.6 meters (2 feet) to the top of the pole. In this case take precautions to assure that the strap does not slip off. Ideally the strap should be below the top pole attachment, except where that attachment is above eye level.

e. Do not permit any worker to fasten both safety harness snaps in the same D-ring in order to reach out farther on the pole. An extension safety strap should be used or the safety harness let out so that work can be performed with the safety harness snaps fastened one in each D-ring.

f. Workers should not attach metal hooks, or other metal devices to body harnesses. Metal chains and keepers should not be used. Use leather straps or rawhide thongs with hard wood or fiber keepers. Care should be taken to prevent the snaps on the safety harnesses from coming in contact with anything that may open a snap. The tongue of the snap on the safety harness should face away from the body.

WARNING

Never change the amount of strain on a pole by adding or removing wires until you are sure that the pole will stand the altered strain. If in doubt, consult your foreman.

7.8.6 **Materials Precautions While Working on Poles**

CAUTION

Take the following precautions when hoisting or lowering materials:

a. Junked material that cannot be lowered safely may be dropped only if there is no danger to workers or the public.

b. Workers engaged in hoisting tools and materials should be positioned so that they will not be injured by an accidental dropping of the tool load.

c. Materials and tools should not be left in an insecure overhead position. Large objects should be securely lashed.

d. Minimize the number of tools carried in tool belts. Secure tools returned to a tool belt. Keep all other tools on the ground until they are required. Then tools should be raised and lowered by means of a canvas bucket attached to a handline. If a tool is too large to be safely raised in this manner, it should be raised by means of just a handline.

e. Carry a handline up a pole uncoiled with one end attached to the rear of the worker's body harness. When climbing with a handline, take care to prevent the handline from fouling on any pole attachments.

7.9 **Crossing Pole Structures.** When it is necessary to climb half-way across a crossarm to inspect middle phase insulators, the worker may climb the rest of the way across, provided that, a safety harness can be kept strapped around a timber as a safeguard. To get from one side of a double-pole supported structure to the other, the worker should descend to the ground and go up the other pole unless there are adequate handholds and adequate clearances from live parts to allow safe crossing along the structure.

7.9.1 **Crossing Open Air Switches on Poles**

WARNING

Never cross through an open air switch, one side of which is energized. Energized portions of the structure should be blocked off with barriers and, if advisable, another worker should be stationed to warn anyone approaching about the danger zone.

7.9.2 **Balancing Support on Pole Structures.** Never hold onto air switch arcing horns for support in walking timbers, as these horns break easily and a fall might result.

7.9.3 **Climbing H-Frame Pole Structures.** Never walk along an H-frame crossarm with the line energized.

7.10 **Stringing or Removing De-energized Conductors.** Before stringing or removing de-energized conductors a briefing should be held to discuss the plan of operation, the type of equipment to be used, any adjacent energized lines, needed grounding devices and procedures, use of crossover methods, and the authorization required. Overhead ground wires require the same safety precautions.

7.10.1 **Line Work Precautions.** Observe the following work precautions for stringing or removing lines and for all aerial line work.

7.10.1.1 **Adjacent to Energized Lines.** When pulling wire over or near energized conductors, the worker attending the payout reel should wear rubber gloves and be positioned on an insulated stand of a size equivalent to or larger than a standard rubber blanket. The payout reel should be grounded. Any deviation on grounding payout reels requires special permission from the supervisor.

a. A bull rope of dry polypropylene rope not smaller than 19 millimeters (3/4 inch) diameter is used in stringing. Handlines are not strong enough. The bull rope should be placed in position to pull the wire before attempting to string it. The bull rope should be of sufficient length to reach the distance the wire is to be pulled. Fasten the wire to the end of the bull rope and pull it into position.

b. A car or truck should be used to pull the wire so that the driver can see the signals of the reel operator. Both in pulling in the wire and in sagging it, the pulling should be slow and steady to prevent swinging the wires into the energized conductors. The wire should be watched carefully to prevent its hanging up on tree limbs, weeds, and other obstructions. No workers should be permitted to touch any conductors or wires on the ground without rubber gloves.

7.10.1.2 **Over, Under, or Across Energized Lines.** When wires are strung and sagged over, under, or across conductors carrying a voltage of 5,000 volts or less, personnel handling the wire should wear rubber gloves and use other necessary protective devices. Conductors carrying more than 5,000 volts should be positively and constantly grounded during the stringing operation. As soon as the wire is ready to be deadended, it should be grounded with standard grounding devices.

7.10.2 **Other Work Precautions Affecting Aerial Lines.** Electrical charges may appear on the line from a lightning strike or from induced static charges from a very dry atmosphere. Discontinue operations when there is any indication of lightning in the surrounding area.

7.10.2.1 **Fallen Wires.** All personnel should look for fallen wires. A worker finding a fallen wire will stand by it to protect all street and highway traffic and pedestrians from the hazards. As soon as possible, another worker should be directed to telephone the facilities engineer or the appropriate superintendent to have the wire de-energized. The worker finding the fallen wire should not leave until instructed by the supervisor in direct charge.

7.10.2.2 **Fire.** All electric lines close to a fire should be de-energized immediately to protect the firemen. The electric lines should not be re-energized until all danger has been removed. Where electric lines were located close to the fire, the electric lines, ground wires, and guying should be inspected carefully. Inspect insulators for cracks and crossarms and poles for charring before the electric lines are restored to service.

7.10.2.3 **Vehicular Protection.** Wires being strung along or across streets or highways should be kept sufficiently elevated to eliminate vehicular collisions. The supervisor should delegate a competent person to act as flagman. Traffic should be blocked when this line elevation is not possible.

7.10.3 **De-energized Line Grounding.** Requirements for grounding of de-energized lines are covered in Section 5. Other grounding requirements should be as follows:

7.10.3.1 **Permanent Ground Wires.** Permanent ground wires are installed to protect workers. Remember that the metallic case, covering, or mounting support of any energized piece of electrical equipment should be considered energized at full voltage if it is not properly grounded. All permanent grounds should be installed in accordance with the requirements of the NFPA 70, The National Electrical Code (NEC) or the ANSI C2, The National Electrical Safety Code (NESC) as applicable.

a. Ground wires should be installed clear of all metallic line equipment (except that which is normally grounded), hardware, or streetlighting fixtures.

b. Ground wires on distribution wood poles should be protected with wood molding for the entire working length of the pole and protected to prevent guy wires from cutting the ground wires. The entire working length of the pole is from the point where ground wire terminates near the top of the pole to 1.5 meters (5 feet) below the lowest crossarm or bracket, and from the ground line to 2.5 meters (8 feet) above the ground line.

c. Never cut an overhead ground wire or neutral wires of any kind because of the need for line or equipment replacement, unless specifically instructed by your supervisor to do so. Also, avoid opening a joint in such a wire without first bridging the joint with wire of a suitable size.

7.10.3.2 **Common Neutral Systems.** Fuses of all transformers should be opened before work can be done on a transformer bank where the grounded neutral wire is used for both primary and secondary neutrals. The connections from the transformer to the grounded neutral should be made before the connection from the transformer to the phase wire is made. The connection from the transformer to the grounded neutral wire should never be disconnected while the transformer is energized.

7.10.3.3 **Protective Grounding Equipment.** Protective grounding equipment should be maintained in good condition and should be inspected prior to each use. Use only approved screw-type ground clamps. Grounding equipment should connected to ground point first, then to the item to be grounded. (See Table 21.)

7.10.4 **Handling and Stringing Guidance.** ANSI/IEEE 524, Guide to the Installation of Overhead Transmission Line Conductors, provides general recommendations on the methods, equipment, and tools used for the stringing of overhead line conductors and ground wires. The following safety precautions are mandatory.

7.10.4.1 **Reels.** Adequate braking should be used to stop all payout reels. Personnel should not otherwise touch or attempt to stop the revolving reel.

7.10.4.2 **Conductors.** The inside end of the coil wire, where accessible, should be securely fastened to the reel to prevent the wire from getting loose when the wire has been played out. If the inside end of the coil cannot be secured, a tail rope should be fastened securely to the wire before the end is reached to prevent its getting loose.

7.10.4.3 **Conductor Grounding.** Bond and ground all stringing equipment, such as reel stands, trailers, pullers, or tensioners. (See Figure 6 and Table 28.)

7.10.5 **Primary Line Installation.** Lines should be strung to clear the ground by an amount not less than that specified in the rules of the NESC. These minimums depend upon whether the line is above a street (consider its street traffic classification), above a pedestrian way, or over or near other structures. Wire and guys that are being strung should be kept clear of any

possible interference with public traffic of any type. Where it is necessary to block traffic temporarily while wires and guys are being installed, one or more members of the crew should be assigned to direct traffic.

7.10.5.1 **Stringing Primary Line Wires.** Stringing by facility personnel will normally be done by the tension method, since this keeps the conductor clear of energized conductors and clear of obstacles that might cause surface damage to the wire. Slack stringing may be appropriate for new short line extensions. In either case lines should be sagged to meet the requirements of the NESC.

a. In stringing wires, care should be taken not to put kinks into any part of the line. Kinks reduce the strength of the wire and may result in fallen wires later.

b. Before changing the strains on a pole by adding wires, engineering guidance should be requested to ensure that the pole will safely stand the altered strain.

7.10.5.2 **Clipping in or Tying Primary Line Wires.** This involves the transferring of sagged conductors from their stringing travelers to their permanent insulator positions where they may either be clamped or tied to insulators.

a. Wires should be securely tied-in at all tie-in type insulators to prevent the possibility of wires becoming loose at points of support and falling to the ground. Where double arms are provided, line wires should be well tied-in to insulators on each arm. This applies to pin- and post-type tie-top insulator work. Clamp-type insulators should have the clamps tightened to meet the manufacturer's requirements.

b. When it is necessary to connect two parallel circuits at one or more points on the line, the phase wires should be tested with a potential transformer or other means, to make sure that the phase wires of one circuit are being connected to the corresponding phase wires of the other circuit.

c. Care should be taken to see that phase wires are not crossed when turning the vertical angle on three-phase lines, that is, phase wires should take the same position leaving an angle as coming into it.

7.10.6 **Secondary Line Installation.** Secondary lines should be installed to meet line clearance requirements of the NESC. Lines may be single or triplexed wires. Secondary lines with insulation should be handled with the care insulated wire requires. Workers should be particularly careful in stringing secondary services, to avoid any undue hazard in close proximity to primary lines. Locations where the service wires might fall across conductors of a higher voltage are not permitted.

7.10.6.1 **Stringing Secondary Line Wires.** Before stringing secondary wires, nearby or adjacent energized lines should be de-energized and grounded. As an exception, service wires may be installed near overhead energized lines provided the following operations are carried out in the following order.

a. Connect service wires to the building; attach a handline to the other end of each wire and carefully raise the wire to its position on the pole; and then attach service wires to the bracket or crossarm.

b. While these operations are being performed, workers should wear rubber gloves and use insulation to prevent shock from unintentional contact between the service wires and the primary lines.

c. Personnel on the ground should not attempt to install meters or other secondary connections while these operations are being performed.

7.10.6.2 **Protecting Secondary Lines.** In the handling and stringing of weatherproof-covered wires, care should be taken not to injure the weatherproof covering.

7.10.7 **Removing Lines.** Removing or salvaging wires requires the same general precautions as stringing wires. However, where practicable, the wire to be removed should be pulled out and laid flat on the ground before any attempt is made to coil the wire by hand or on a nonpower-driven reel.

Note

A worker should never change the strains on a pole by removing wires until certain that the pole will safely stand the altered strain. Where a pole will be weakened by the removal of the wires, it should be guyed before these wires are removed. All wires should be lowered with a handline. If this is not possible, before cutting a wire aloft care should be used to avoid contact with other wires.

a. Lines which are being cut or rearranged should not be allowed to sag on, or be blown against other electric power lines, signal lines, signal equipment, metal sheaths of cables, metal pipes, ground wires, metal fixtures on poles, guy wires, and span wires.

b. Wires which have been cut, or which are being rearranged, should not be allowed to fall near or on a roadway where there is danger to traffic. Where it is impossible to keep these wires clear of the roadway by at least 3 meters (10 feet) or more, (depending upon the voltage of the adjacent lines) all traffic should be blocked. All persons working on lower levels of poles,

where cutting is taking place, and all personnel on the ground should be notified well in advance of the cutting so that they may stand clear.

7.10.8 **Guying**

Note

Engineering guidance should be obtained prior to the installation or removal of guys.

7.10.8.1 **Guy Installation.** Install guys to meet the following requirements.

a. When insulators are used they should be connected into the guy wire line before the guy wire is set in place. In new work, guys should generally be installed before line wires are strung. In reconstruction work, guys should be installed before any changes are made in the line wires and care should be taken not to place excessive pull on the pole and wires already in position.

b. Guys should be installed so that there is minimal interference with the climbing space and guys should clear all energized wires.

c. Guy strain insulators should be provided, wherever necessary, to secure the required amount of insulation in accordance with applicable codes.

d. Guys should be installed to the correct tension. Where necessary, a guy hook may be used to prevent the guy from slipping down the pole. These hooks should be so located that they do not interfere with climbing and so placed that they will not be used as steps. Where guys are liable to cut into the surface of a pole, the pole should be protected by a guy plate at the point where the guy is attached. The plate should be well secured to the pole to prevent the possibility of injury to a worker climbing up or down the pole.

e. All guys should be installed so that they do not interfere with street or highway traffic. Guys located near streets, or highways, should be equipped with traffic guards. Traffic guards are sometimes called "anchor shields". Guy guards (traffic shields or anchor shields) should be yellow.

f. Guy wires should be installed so that they will not rub against messenger or signal cables.

g. Guy wire containing snarls or kinks should not be used for line work. It is preferable to use guy wires of the correct length to avoid unnecessary splices.

7.10.8.2 **Removal of Guys.** Before guys can be removed, the condition of the pole should be determined. If the pole is weak, it should be securely braced before any changes in pole strains are made.

a. Where the removal of guys from a pole will change the strain and present a dangerous condition, the pole should be braced temporarily to make such a changed condition safe.

b. Where it is not possible to install side guys, poles may need to be braced to be self-supporting. The pole bracing should be installed so that it will not interfere with climbing or with street or highway traffic. Pole braced guys should not be used on poles which will be climbed.

7.10.9 **Insulators.** Pick up insulators by their tops to avoid cutting gloves or hands on insulator petticoats. Do not screw down insulators too tightly because their tops may break off, cutting gloves or hands.

7.11 **Streetlighting.** Streetlighting circuits can be either low-voltage multiple circuits or medium-voltage series circuits. It is important that the type of circuit be identified because of the voltage level differences. There should be no reason that streetlighting circuits cannot be de-energized for daytime work.

7.11.1 **Streetlighting Precautions.** Streetlighting line wires and streetlighting fixtures and wires, not under construction or grounded, should be considered energized and should always be worked with rubber protective equipment, unless de-energized and grounded. The voltage of streetlighting circuits should be treated as that of the highest voltage occupying one or more poles on which the streetlighting circuit is run. This is necessary because streetlighting wires sometimes become crossed with live voltage wires during a fire or during the day when not in use.

7.11.2 **Multiple Streetlighting Circuits.** Multiple streetlighting circuits should be considered to be at the same voltage as the circuits to which they are connected, unless the circuit is on the same structure with a higher voltage wire, in which case it should be considered to be at the higher voltage level.

7.11.3 **Series Streetlighting Circuits.** Before a series streetlighting circuit is opened and work is performed, the following procedures will be followed:

a. A circuit should be disconnected from the source of supply by opening disconnecting switches or other absolute voltage cutouts, and lockout/tagout/tryouts attached to such disconnects or cutouts. Do not depend on time switches or other automatic devices.

b. A circuit should be properly jumpered to avoid an open-circuit condition.

c. In replacing lamp globes in series streetlighting brackets, there is danger of an arc developing and causing serious damage and possible injury if the spring clips in the receptacle do not make contact. These springs may have been heated to the extent that they have lost their temper, or for some other reason do not close the circuit when the lamp socket is pulled out. Approved changers with at least 1.8-meter (6-foot) handles will be used for replacing lamps on series streetlighting circuits. Workers should wear rubber gloves when removing or installing lamps where lamp changers cannot be used.

7.11.4 **Climbing Space.** Maintain safe access by hanging streetlighting fixtures clear of the climbing space. All bolts, lag screws, and other hardware used in securing the fixtures will be carefully trimmed.

7.11.5 **Time Switches.** When winding time switches, or working on automatic time switches, workers should not trip the switch "on" without first pulling the transformer disconnects or making sure that streetlighting circuits will not be energized. On time clocks with medium-voltage connections, workers should always wear rubber gloves in winding, resetting, and otherwise maintaining the clock.

7.12 **Working on or Around Pole-Mounted Equipment.** See Section 6 for various precautions that apply to basic equipment safety for equipment that is mounted above grade. Be aware that some state safety orders do not permit grounding of transformer enclosure cases on wood poles, if there is a possibility that an accidental contact with bare aerial lines might occur. Transformers connected to an energized circuit should be considered as being energized at the full primary voltage unless they are adequately grounded.

7.12.1 **Aerial Surge Arresters.** Check that the permanent ground connection is intact before any work is done. Do not climb or strap off to surge arresters. Wear eye protection when connecting, disconnecting, or discharging surge arresters.

7.12.2 **Aerial Switches and Fuses.** The maintenance of switches and fuses may require temporary line modifications to permit repairs where service continuity needs to be maintained. Both sides of fuses should be de-energized in order for repair work to proceed. Engineering guidance is required in preparing a step-by-step modification procedure.

7.12.3 **Aerial Capacitors.** Refer to Section 6 for discharging capacitors. Individual capacitor banks should be grounded if insulated capacitor mounting racks are not used. Provide in accordance with the manufacturer's instructions.

7.12.4 **Aerial Power Transformers and Voltage Regulators.** Check poles and crossarms before installing a transformer or regulator on an existing pole. Consider that the following transformer requirements apply to regulators where applicable. Only qualified personnel should climb poles to fuse, inspect, and test transformers and equipment. When

transformers are installed or replaced, their secondaries should be checked for voltage and phase rotation when necessary. When distribution transformers are installed and before they are energized, the ground connections should be made to the case, secondary neutral, and then to the primary neutral when used, in the order named.

7.12.4.1 **Aerial Energized Work.** Except for testing, replacement of fuses, and switching, work on energized pole-mounted transformers and lines is prohibited.

7.12.4.2 **Aerial Installation.** To meet these requirements, engineering guidance may be necessary.

a. All frames and tackles used in erecting pole-type transformers should be carefully inspected each time before use. Defects should be repaired before the frames and tackles are used.

b. Wherever possible, junction poles, subsidiary poles, and streetlighting poles should not be used as transformer poles. When it is necessary to install transformers on junction, subsidiary, or streetlighting poles, take care to maintain proper climbing space and to avoid crowding of wires and equipment.

c. Transformers should be installed only on poles strong enough to carry their weight. Transformer poles should be straight and, where necessary, guyed to prevent leaning or raking of the pole after the transformer is hung.

d. When transformers are raised or lowered, all crew members should stand clear and traffic should be detoured if necessary. In congested traffic, the pole space should be roped off. Personnel on the pole should place themselves on the opposite side from that on which the transformer is being raised or lowered. Pole steps and other obstructions in the path of ascent/descent of large transformers should be removed.

e. When transformers are installed, the pole climbing space should be carefully maintained so that it will not be necessary for climbing workers to come too close to the transformer case.

7.12.4.3 **Aerial Connection.** Pole-type transformers should not be installed until they are supplied with a sufficient amount of good quality oil.

a. When a three-phase bank of pole-type transformers is replaced, the new transformers should be carefully checked for phase rotation before service is restored, so that the new service connections will be the same as before the change. If incorrect phase rotation results, any connected motorized equipment will be dangerous as it will revolve in the wrong direction.

b. Rubber gloves or hot sticks should be used when installing a pole-type transformer. First connect the primary leads from the transformer to the primary cutouts; second, make sure that secondary leads from the transformer are in the clear; third, make connections from cutouts to primary line; fourth, close primary cutouts; fifth, make polarity tests on secondaries and connect permanently. When removing transformers, open cutouts and disconnect secondaries to prevent danger of "backfeed".

c. Where one or more transformers feed into a common secondary or are paralleled on the low-voltage side, caution should be exercised in re-fusing, as the higher voltage terminals will be energized by stepping up the secondary voltage that is supplied by the other transformer.

7.12.4.4 **Aerial Inspection and Maintenance.** Only "Qualified Climbers" should be allowed to climb poles to inspect and test pole-type transformers. Never stand on or otherwise contact transformer cases, while working on or near energized circuits.

a. Before changing or replenishing oil, all energized connections to transformers should be disconnected from all live circuits.

b. When opening transformers, do not use lighted matches or open flames of any kind.

7.12.4.5 **Aerial Fusing.** When installing fuses, workers should be careful to avoid contact with any live lines, or with any grounded surfaces (grounded lines, the casings of grounded transformers, streetlighting fixtures, signal lines, signal equipment, the metal sheathing of cables, metal conduits, span wires, and guy wires).

a. Before installing fuses in new cutouts, replacing fuses, or opening disconnects, workers should protect their eyes by wearing goggles and faceshields. They should not use their arms to protect their eyes and faces from any flashes or arcs that may occur. It is mandatory for the workers to wear rubber gloves or to use a "hot stick" as appropriate to the voltage level. Workers should secure themselves to the pole with their safety harnesses.

b. When fuses are taken out of the circuit they should be removed entirely from the fuse enclosures or cutouts.

c. In phasing out a transformer or in testing it for polarity, small size fuses should preferably be used.

7.12.4.6 **Aerial Service Connections.** Do not string service wires from a transformer pole if it is at all possible to install them at some other location. Service wires should never be installed on transformer poles, unless a minimum separation meeting code requirements can be maintained between the service wires and the energized primary conductors or apparatus.

a. Two workers should be used in stringing services from a transformer pole where primary jumpers energized at 5,000 volts or more extend below the secondary wires.

b. When a worker is making connections to secondary buses, the neutral wire should be connected first and energized wires connected last. The procedure should be reversed when disconnecting services.

7.12.4.7 **Aerial Testing.** Testing of transformers, autotransformers, and similar equipment should be performed by qualified personnel under appropriate engineering guidance. All temporary leads used in testing, such as secondary leads of potential transformers, thermometer leads, and recording voltmeter leads, should be securely supported on the pole and should clear all traffic. The positions of these leads should not interfere with the climbing space or with maintenance work which may be required while the testing is in progress.

7.13 Tree Trimming and Brush Removal

Note

Comply with the requirements of OSHA standard 29 CFR 1926.296r, Line Clearing, Tree Trimming Operations. Tree trimming and brush removal is done to maintain the integrity of electric lines and apparatus and provide right-of-way clearance.

7.13.1 Tree Trimming Training Qualifications

WARNING

Live-line tree trimming should not be done. If live-line tree trimming needs to be performed, and is authorized by the Public Works Officer or other designated authority (per local designation), provide and ensure the use of appropriate protective barriers and comply with the requirements of OSHA standard 29 CFR 1910.269(r), Line Clearance Tree Trimming Operations. The worker should be qualified to do tree trimming.

7.13.2 **Tree Trimming Public Safety.** Erect suitable signs and barriers to prevent the public from passing under trees in which personnel are working and to prevent stumbling over brush on the ground. Brush should not be piled on sidewalks nor left on streets and highways overnight.

7.13.3 **Tree Trimming Tool Safety.** Raise and lower tools with a handline. Only saws and pruning knives or shears are used for cutting limbs. Do not carry unnecessary tools up the tree. Tools should not be hung or stored on tree limbs.

7.13.4 Working on Trees Near Energized Lines

WARNING

Be aware that lines may not always be de-energized for tree trimming operations. Review the rules for live-line safety and for climbing and working on a pole especially in regard to being knowledgeable of the energized lines in the area and the relevant dangers. Workers in trees should use harnesses and safety straps. When working near energized lines, arrange your safety line so that a slip or fall will carry you away from the energized lines.

7.13.5 Climbing and Working on Trees

WARNING

Climbing trees should be avoided unless ladders or aerial lift bucket trucks will not provide the necessary access. Workers in trees should use every precaution to prevent contact with aerial electric and telephone wires, and damage thereto. Ensure that the following precautions are taken.

7.13.5.1 **Tree Climbers.** If tree climbers are used, ensure the equipment is approved for the bark thickness of the tree being climbed. Never use pole climbers.

a. Use a harness and safety strap or life line. Place the strap around a tree limb of sufficient size to hold the worker's weight, but never around the tree limb being cut.

b. Do not stand on tree limbs too small to support your weight. Extreme care should be exercised when working in trees that have brittle wood.

7.13.5.2 **Tree Work.** Before felling trees inspect tools to be used (such as ropes, tackle, ladders, and chain saws) to ensure they are in proper condition.

a. Place signs warning pedestrian and vehicular traffic of the danger from work being performed. Station flagmen where necessary.

b. Inspect each tree for possible dangers (conductors and fences) in the line of fall. Have energized conductors de-energized if possible.

c. Check each tree for dead or broken tree limbs when climbing. Remove unsound tree limbs during the climb.

d. Lower cut-off tree limbs with a rope. Falling tree limbs can cause injury and property damage.

e. Trees greater than 7.5 meters (25 feet) tall and 200 millimeters (8 inches) in trunk diameter should have ropes attached before felling. Assign workers to the ropes to guide the tree as it falls.

7.13.6 **Power Trimming Equipment**

WARNING

Chain-saw operators will follow the manufacturer's operating instructions and will carefully inspect and maintain their saws prior to use. Chain saws are very dangerous. Observation of the following operation and maintenance safety precautions will assist in the avoidance of injury.

7.13.6.1 **Operating Power Trimming Equipment.** Operate only if authorized and observe these operator precautions. Before starting to cut, the operator should clear away brush or other material that might interfere with cutting operations.

a. Operators will wear personal protective equipment as prescribed by the designated authority. Eye, ear, hand, foot (safety shoes) and leg protection are required as a minimum unless specifically waved by the designated authority.

b. The idle speed will be adjusted so that the chain does not move when the engine is idling.

c. The operator should be sure of his/her footing before beginning cutting operations.

d. The operator should hold the saw with both hands during all cutting operations. Grip the chain saw properly. Place one hand on the top handle with the thumb curled under the handle. Place the other hand on the control handle.

e. The operator should stand to the side of the chain saw, not directly behind it, to keep the body away from the path of the guide bar if kickback occurs. Be alert to conditions that can cause the chain saw to kick back. Kickback occurs when a solid object (such as a tree limb above the cutting area) contacts the chain at the guide bar nose. This causes the saw to be thrown violently up and back toward the operator.

f. The chain saw should never be used to cut above the operator's shoulder height.

g. The operator should shut off the saw when carrying it over slippery surfaces, through heavy brush, and when adjacent to personnel. The saw may be carried running (idle speed) for short distances of less than 15 meters (50 feet) as long as it is carried to prevent contact with the chain or muffler.

h. Never operate a chain saw when physically tired or under the influence of alcohol, medication, or other drugs.

i. When felling a tree clear a path of retreat while assuring that the fall does not damage anything.

7.13.6.2 **Chain Saws.** Chain saws should be kept clean and sharp at all times, and kept in sound mechanical condition with all guards, spark arresters, mufflers, handles, and other items properly installed and adjusted. Observe these equipment precautions

a. Fuel for chain saws should be stored in approved vented containers that are marked to show their contents. Never store the fuel near flammable materials. Keep the containers clean. Always wipe the spout clean before filling the chain-saw tank. Filtering the fuel mixture will ensure continued smooth engine operation.

b. Make sure that a proper mixture of fuel (gasoline and oil) is used. Check the fuel tank and chain oiling reservoir for proper levels before use. The filler caps for the fuel tank and chain oiling reservoir should be clearly marked and securely attached during operation and storage.

c. The chain saw should not be started within 3 meters (10 feet) of a fuel container.

d. The chain saw should not be fueled while running, hot, or near an open flame.

7.13.6.3 **Right-of-Way Brush Removal.** Brush clearance should be performed as part of electrical maintenance work only to clear right-of-ways. Wear personal protective equipment as covered for power trimming equipment. Recognize the hazards from poor work practices to workers and to the environment and observe the following rules.

a. Cutters felling heavy brush or small trees should give sufficient warning to other personnel. Never work so close that one worker could injure another with a swinging ax or hook.

b. Brush chippers should be operated only if authorized and by standing to the side of the chipper chute while feeding the butt end of brush into the chipper first. Use the automatic shut-off/stop control at the operator's station in an emergency.

c. Tools such as saws, axes, bush hooks, pruning shears, scythe blades, and pitch forks, should not be hung in bushes or small trees nor stored hidden from easy view of other workers.

d. Personnel assigned to remove or pile brush should stay a safe distance behind workers using cutting tools.

e. When burning brush, be careful at all times to see that the fire and sparks are under control. Cover hot ash piles with dirt or douse them with water. Obey local laws concerning open fires. The burning of poison ivy, poison oak, and poison sumac is prohibited. Smoke from burning these plants is very toxic; even the windward side of the fires may not be safe.

f. Workers assigned to right-of-way cutting should be taught to recognize poison ivy, poison oak, and poison sumac. Some people are very susceptible to the poison from these plants and should keep away from the vines and leaves. If workers do contact these poisonous plants, they should report to the foreman who will immediately render appropriate first-aid treatment to prevent a rash from breaking out on the worker's skin. A first-aid kit should always be at hand.

g. Workers should always be on the alert for snakes when cutting right-of-way. A standard snake bite kit should be carried on every such job.

Section 8. UNDERGROUND CABLES, STRUCTURES, AND ASSOCIATED ELECTRICAL COMPONENTS

8.1 **Underground Work.** Comply with the requirements of OSHA standard 29 CFR 1926.269(t), "Underground Electrical Installations." Underground work may pose unique safety problems where the work is accessible by the public or where the work has to be done in a confined space.

8.2 **Underground Work Area Protection.** Work area protection is the safeguarding or protecting of pedestrians, motorists, facility workers, and equipment by the use of barriers, warning signs, lights, flags, traffic cones, barricade rope, and flagmen. Protection is required for approaches to work areas, excavations, open manholes, and parked equipment. An approved fire extinguisher in good operating condition and immediately accessible for underground work is mandatory.

8.2.1 **Underground Work Area Protection Methods**. Work area protection methods should provide safety for workers, equipment, and the public without excessively impeding public traffic.

a. During any period in which apparatus needs to be left open and energized, a suitable enclosure should be erected around the apparatus, or a qualified worker should be stationed at the location, to ensure the safety of the public.

b. All temporary cable installations should be made in a manner providing safety for workers and the public.

8.2.2 **Impact of Vehicular Traffic Flow.** The amount and speed of the traffic will influence the work planning. Where work will require excavation in roads and highways, the appropriate traffic authority should be consulted in order to maintain safe traffic flow. The public should be warned in advance, then regulated and guided safely through or around the work area.

8.2.3 **Work Space Considerations.** The extent of the work and the lineup of traffic will effect scheduling, which should be done to cause the least interference to traffic and, minimize the possibility of accidents. Good housekeeping in the storage and equipment space necessary for the work should always be an ongoing concern but especially wherever it impinges on public right-of-ways. It is of the utmost importance that the work area be properly identified and that warning devices clearly convey the appropriate message to the traveling public, well in advance of arrival at the work area. This same good housekeeping applies to protection of workers.

8.2.4 **Barricades and Warning Precautions.** Traffic control requires the use of barricades and warning precautions.

8.2.4.1 **Devices.** Only those signs, standards, barricades, flags, and cones that conform to state or local codes will be used. All state and local traffic codes will be followed when providing work area protection.

a. During night operations or in periods of reduced visibility, special precautions will be taken. Adequate warning equipment will be used including flashing lights, flares, or area illumination.

b. Warning devices and equipment will be removed as soon as the hazard is eliminated.

c. Warning devices and equipment not in use will be stored in a proper manner or removed from the work area.

d. Barricades of materials having protruding nails will not be permitted.

8.2.4.2 **Flagmen.** Flagmen or other appropriate traffic controls will be used whenever there is any doubt that the use of signs, signals, and barricades is ineffective.

a. Flagmen will wear a red or orange warning vest or garment. Warning garments worn at night will be of a reflectorized material.

b. Flagmen using hand signaling equipment will ensure signals provide sufficient warning to protect themselves and the work site. Signal flags will be red and at least 60 centimeters (24 inches) square. Sign paddles (Stop and Slow) will be on a 1.8-meter (6-foot) staff. In periods of darkness or reduced visibility, red lights will be used.

c. Flagmen will place themselves in a protected position to reduce possibility of injury from traffic.

d. Flagmen will ensure that they can fully observe the operation and will guide vehicular traffic in such a manner as to minimize the possibility of accidents or injury.

e. When flagmen are used at both ends of a job site, reliable communications or prearranged signals will be used to insure proper traffic flow.

f. Flagmen will face traffic when giving signals.

g. Flagmen will give positive, direct signals that leave no doubt as to their meaning.

8.2.4.3 **Barriers and Barricade Tape.** Refer to Section 6.

8.2.4.4 **Caution and Danger Signs.** The following are approved signs:

a. Danger, High Voltage -- Various sizes

b. Danger -- Keep Away -- 300 by 600 millimeters (12 by 24 inches)

c. Danger -- Personnel Working Overhead -- 300 by 350 millimeters (12 by 14 inches).

d. Wear Goggles When Grinding -- Various sizes

e. Danger, Drive Slowly -- Personnel Working -- 380 by 380 millimeters (15 by 15 inches).

f. Danger -- Blasting -- 380 by 380 millimeters (15 by 15 inches).

g. Caution -- Check for Feedback -- 140 by 50 millimeters (5.5 by 2 inches).

8.2.4.5 **Manhole Work Areas**

Note

Preparing a manhole work area requires proper use of warning devices.

a. During the time that manholes or vaults at the sidewalk or street level are open, suitable barricades, traffic cones, warning signs, flags, and lights will be used and maintained.

b. When working in vehicular traffic areas manholes, traffic cones should be used to guide traffic around the danger area. Great care should be exercised not to obstruct traffic. In addition, a blinking light may be used on the traffic side of the hole, as well as sawhorse type barricades around the hole.

c. For sidewalk manholes and vaults, the barricades should provide pedestrians and onlookers positive protection against falling over material or into the manhole. At night all open manholes should be outlined with either flashing or nonflashing lights.

8.2.4.6 **Excavation, Trenching, and Backfilling**. Comply with the requirements of OSHA standard 29 CFR 1926, subpart P, Excavations. Work in increments to minimize open trenches. On a daily basis, remove spoil to an area where it will not constitute a safety hazard.

a. All equipment and materials, stored where pedestrian or vehicular traffic might be endangered, should be marked with red flags by day and red lights by night, or both. Do not store equipment or materials where they will obstruct fire alarm boxes, hydrants, or fire apparatus.

b. Keep tools, stones, and dirt away from the edge of a trench. Excavated material removed from trenches in streets should be kept on the traffic side of trenches, whenever possible, until it can be used for fill or removed.

c. Carefully refill excavations until such time as permanent paving can be done. See that all refilling is well tamped.

d. Provide ditching machines with suitable walkways, footboards, railings, and proper safeguards over gears, chains, and other moving parts. Do not stand near digging buckets while the machine is in operation.

e. Protect all open holes along streets and highways or other frequented places by suitable covers.

f. In excavations which workers may be required to enter, excavated or other material will be kept at least 0.6 meters (2 feet) or more from the edge of the excavation.

g. When workers are required to be in trenches 1.2 meters (4 feet) deep or more, at least two separate and adequate means of exit, such as ladders or steps, will be provided and located requiring no more than 7.5 meters (25 feet) of lateral travel.

h. Sides of trenches 1.5 meters (5 feet) or more in depth will be shored, sloped, or otherwise adequately supported to protect those working within them.

i. Suitable gloves will be worn when using any equipment or tools to excavate, expose, or handle direct-burial cables.

Note

Excavations 4 or more feet deep require daily inspections by a competent person as defined in OSHA standard 29 CFR 1926, Subpart P, Excavations.

8.2.4.7 **Cable Pulling Protection**

WARNING

Workers will not handle pull-wires or pulling-lines within reaching distance of blocks, sheaves, winch drums, and take-up reels. Workers should not remain in a manhole during pulling operations.

a. Wire rope will not be used to pull cable in a duct already occupied by conductors.

b. A nonmetallic duct fishing wire or device will be used when fishing ducts containing energized conductors.

c. Ducts will always be fished in the direction that presents the least hazard. A worker will be stationed at each end when required.

d. Avoid parking tool carts and reels on inclined streets. Where this cannot be avoided, equipment should be placed at a slight angle to the curb so that the curb serves as a chock. Chock all wheels with blocks or other suitable items and install a well-fastened upright brace at both the front and rear of the vehicle. Where more than one reel is parked at the same location, lag the reels together. Place and fasten chock blocks and braces so that they cannot be easily dislodged.

8.3 **Existing Obstruction Protection.** When obstructions such as existing utilities are encountered in digging, the supervisor should be notified immediately, so that damaging or hazardous contact with energized cables may be avoided. Excavation practices and procedures for damage prevention to existing utilities are covered in 8.4.

8.3.1 **Locating Buried Facilities.** Use area utility maps to locate existing utilities as accurately as possible.

8.3.2 **Direct-Burial Electrical Cable Work**

WARNING

Extreme care will be used in excavating near or exposing direct-burial electric underground cables. Before excavating the location of the cables should be determined. If the depth of all direct-burial cables is definitely known, power digging equipment may be used for excavating all but the last 300 millimeters (12 inches) of cover over the cables. The remaining cover will be removed by use of shovels with wooden handles or similar hand-digging tools. Where the depth of direct-burial cables is not established, power digging equipment should not be used, except to break and remove the surface pavement.

a. Probe rods or bars will not be used to locate any underground direct-burial cables.

b. When uncovering direct-burial cables, extreme care should be observed to avoid damaging the cable insulation.

c. All exposed cables in a work area will be protected against damage by boards or other nonconductive materials. When it is necessary to weld adjacent to cables, suitable nonflammable protective material will be utilized.

d. Under no conditions will workers stand, sit, kneel, or lean on unprotected direct-burial cables.

8.3.3 **Digging Restriction**

CAUTION

Mechanical excavating equipment will be used only in areas where there is no known danger of contacting or damaging buried utilities. Elsewhere excavation will be done only by hand digging.

8.3.4 **Handling Damage to Existing Utility Lines.** If any existing utility lines are damaged then certain steps should be taken dependent upon the type of line.

a. If electric cables are damaged the facility should de-energize the damaged line and take immediate steps to repair it.

b. Environmentally hazardous lines, such as sewer, fuel, and oil, will be handled in accordance with the applicable health and safety hazard requirements. Environmental cleanup will be initiated as soon as possible.

c. If health and safety hazard lines such as gas, steam, or hot water are damaged, the hole will be left open until any utility line flow has been dissipated safely. All possible sources will be shut off. Any workers or residents of the area will be warned, when necessary, and the public will be kept out of the area. The local fire department and the appropriate maintenance facility will be notified immediately.

WARNING

Extreme care will be taken to eliminate the possibility of igniting any escaping gas.

d. Other lines, such as communication, water, or storm drainage, will be repaired as soon as possible by the appropriate maintenance department.

8.4 Excavation Practices and Procedures for Damage Prevention

WARNING

The major reason for accidents and damages caused by excavation work results from a lack of knowledge on the location of existing underground utilities. Preplanning will locate any such obstructions and ensure that correct excavation and backfilling procedures are followed in existing underground utility locations.

8.4.1 **Preplanning of the Excavation Project.** The most important step is to identify underground utilities.

8.4.2 **All Projects Preplanning.** Pre-mark proposed excavation area with white paint prior to notifying the utilities locating service.

a. Obtain the work order or excavation package and document the location request number. Acquire and retain the sketch of the utility location if supplied by the facility owner.

b. Make sure request numbers are valid and that customer information is correct.

c. If there is a “high priority” facility line in the excavation area, make arrangements for the utility locator to be on the job site during the excavation (that is, high pressure gas, fiber optic, medium voltage electric, major pipe and water lines). If the utility locator or facility owner refuses to be present, then document this response on the work order or excavation package.

d. Ensure that all known underground utilities owners have been contacted.

8.4.3 **Large Project Preplanning.** Conduct a pre-construction meeting with facility owners to review excavation area.

a. Obtain as-builts/maps from facility owners.

b. Have sub-surface facility engineering performed if feasible.

c. Photograph the area to be excavated for future reference.

8.4.4 **On the Job Site Procedures.** Once on the job site, begin job preparation by reviewing the list of underground utility/facility owners that are in your excavation area and make

sure that location marks for all facilities are present. Provide a color chart listing each utility with a different color if necessary to ensure all facilities have been located. Have color charts in the hands of all excavators to ensure all known facilities have been shown.

a. If a "high priority" facility is in the excavation area, make sure the locator is on site. If not, consult the color chart for the facility contact numbers and call the facility company and document the response.

b. Account for all utility connections to houses or buildings before you excavate. You should be able to see them above ground or marked on the ground.

c. Identify or locate all private facilities that have not already been located. This includes propane and private lines, sprinklers, and other such lines. Look for sewer vents on the roof of the house, look for sprinkler heads, turn on the system if necessary. Look for physical evidence that facilities have not been located.

d. Sketch the location and document the depth of all public and private facilities on your work order for future reference. If no sketch exists of all other facilities, draw a sketch of marks with measurements of fixed objects if possible for future reference.

e. Expose all facilities that you will be crossing. When possible, all major facilities (that is, high pressure gas, fiber optic, medium voltage electric, major pipe and water lines) should be exposed every 30 meters (100 feet) if parallel within 1.5 meters (5 feet) of the excavation area.

f. If there are no utility locations, if marks are incomplete, or if exposing indicates utility locations are not accurate, DO NOT DIG. Contact the facility owner to complete the utility location.

g. Once you have verified the location of all lines and you have completed the Job Check List, you can begin to excavate. Remember to document the sketch of your excavation site before you start excavating.

8.4.5 Excavating in Areas of Utility Locations

WARNING

Carefully follow all shoring and safety standards, including support of exposed underground facilities.

a. Hand dig within 1.5 meters (5 feet) of any pedestal, closure, riser guard, pole (with riser), meter, or other structure. Hand dig within 0.6 meters (2 feet) of any and all other utility location marks.

b. If it is necessary to use mechanical equipment within 0.6 meters (2 feet) of a mark you should expose the line first.

c. If you are paralleling a line, expose every 30 meters (100 feet) to verify the location and depth of the line. If the utility location is not accurate, contact the facility owner immediately.

d. If using a boring machine, bore away from all facilities. If it is necessary to cross a facility, expose the line to verify location and depth. This may require changing the bore route or depth to avoid a facility. Contact your supervisor to approve route changes.

e. Never place excavated dirt or street plates on top of utility location marks. Keep marks visible and fresh at all times.

8.4.6 **Backfilling in Areas of Utility Locations**

Note

Prior to backfilling, contact facility owners to inspect exposed facilities.

a. All lines exposed during excavation should be supported to prevent stretching, kinking, or other damage.

b. "Shade" all lines, meaning clean, good fill dirt placed around the lines to prevent possible damage.

c. All backfill dirt should be "clean fill" free of large rocks, sharp objects, and large chunks of hard packed dirt or clay.

d. No cable or personal trash and no abandoned lines, or pieces of lines, may be backfilled into the trench.

8.4.7 **If Damage Does Occur to Existing Utilities.** Complete a Construction Facility Damage Report as provided by your activity construction office and submit to your supervisor.

a. If the damage involves a potential risk to life, health or significant property damage, the excavator should call 911 or the local emergency response number.

b. All damages, including kinking or sheath damage, however slight, should be reported immediately to a supervisor and to the facility owner or operator.

c. Photographs should be taken and reports completed to help document the damage and assist in resolving any claim that may be filed.

d. If a water line, other than a main is damaged, you should attempt to stop the flow of water if possible.

e. If a gas or power line is damaged, it may be necessary to leave the area immediately and notify others in the area. REMEMBER, SAFETY FIRST!!! FOLLOW LOCAL SAFETY STANDARDS AND PROCEDURES.

8.4.8 **Accountability for Excavator Error.** Obtain and learn the laws and regulations that pertain to excavating in your city or state. Everyone should incorporate these procedures into their daily routine. By utilizing these procedures, it will increase your productivity and efficiency, not to mention the obvious safety benefits. Consider disciplinary action, suspension, or termination in any of the following situations.

a. Digging without obtaining utility locations.

b. Excavating, including hand digging, without utility locations for any or all facilities or private lines.

c. Any “at fault” damage.

d. Failure to check paperwork or equipment before leaving the shop.

e. Failure to utilize the job check list provided.

8.5 **Preparation for Work in Underground Structures.** Underground structures consist of manholes, handholes, and vaults. Where the word manhole is used it applies to the other structures as appropriate to their size and access. Before entering a manhole, place all warning signs needed for protection of those working in and around the manhole, for drivers of vehicles, and for pedestrians.

WARNING

Before entering the manhole test for oxygen deficiency and dangerous gases. If there is an oxygen deficiency, or if any toxic or combustible gas is entering the manhole, provide adequate ventilation while there are workers in these structures. Smoking is not permitted in manholes.

8.5.1 **Removing a Manhole Cover**. Two persons, each with a manhole cover hook, may be required to remove a cover. They should lift the cover with the leg and arm muscles, and

with their feet placed so that they will be clear if the cover should be accidentally dropped. Figure 11 shows the methods and steps for removing a circular manhole cover.

WARNING

A manhole cover may weigh from 90 to 160 kilograms (200 to 350 pounds).

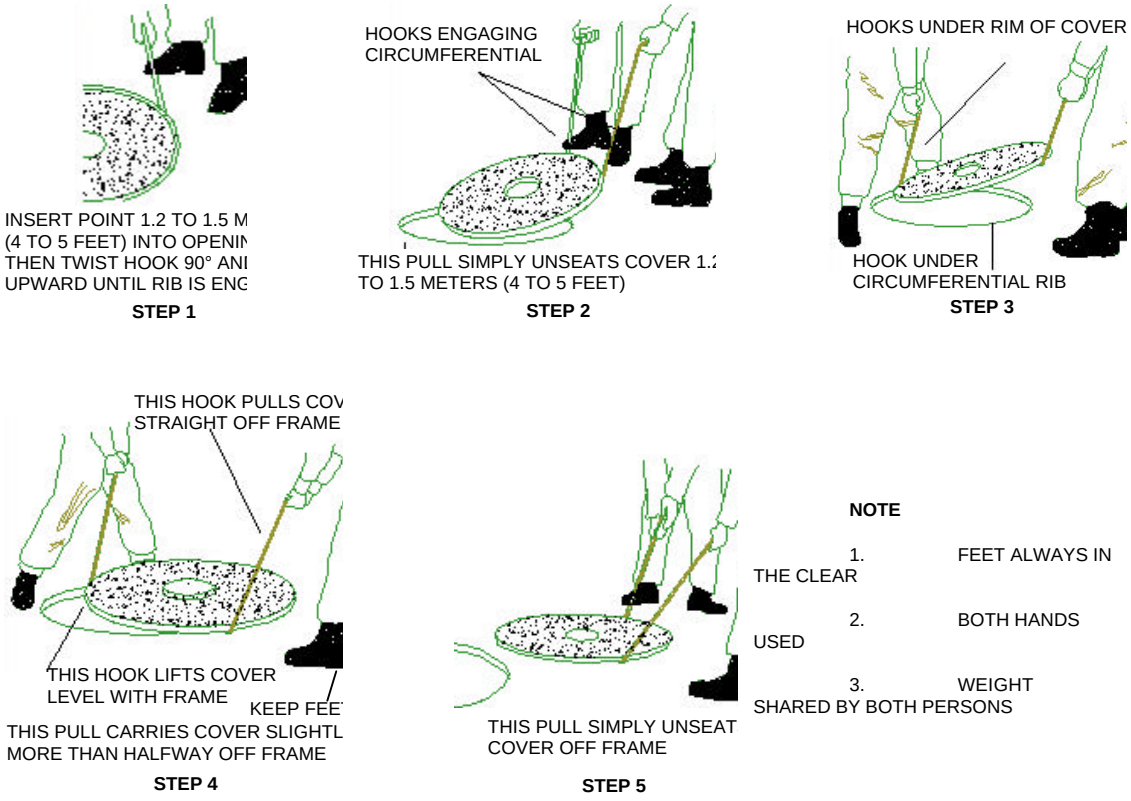

Figure 11
Steps in Removing a Manhole Cover

a. If the manhole cover does not lift readily, first check to be sure the cover is not secured by a locking device. If a locking device is not holding the manhole cover, loosen the cover by placing a block of wood on the cover near the rim and striking the wood with a heavy hammer. Insert a manhole hook into one of the manhole cover holes. Pry the cover while the block of wood is being struck at several different points around the circumference of the cover.

b. If snow, ice, or other surface conditions cause insecure footing around the manhole cover, either clear the working area with a shovel or broom, or spread sand or other suitable material around the cover to ensure firm footing. Do not strike the manhole cover with a steel or iron tool. Use a hardened bronze cold chisel to remove ice from a cover. A bronze cold chisel

will not produce sparks in striking the manhole cover Do not use an open flame or salt to thaw ice around or over the cover. An open flame may cause an explosion if a combustible gas mixture is present in the manhole. A salt solution seeping into the manhole may contribute to cable corrosion. Make test holes in the ice to locate the edge of the manhole cover.

c. A line or cable locator is useful in finding manhole cover locations when records are inadequate or when marking points are covered with ice and snow. If the exact location of the manhole is not known, a small channel may be cut from the outer edge of the general location to the center of the area where the cover should be. If the manhole cover is icebound, use enough hot water to melt the ice around the edge of the cover.

d. Do not leave a manhole cover in a location where it will present a hazard. If the cover cannot be left near the manhole opening, skid the cover to a safe location. If necessary, place a warning device near the removed cover.

e. Before removing a manhole cover, mark the cover and the frame with a piece of chalk so the manhole cover may be replaced in its original position. Improper alignment of the cover within the frame may cause considerable noise when vehicles cross over the covers. When the noise condition does exist, place a thin layer of oakum (or similar material) in the cover seat of the frame.

f. In a traffic area, the manhole cover is removed in a direction that will prevent personnel from falling into the path of traffic should the manhole cover hook slip during the cover removal. The removal position should permit observation of oncoming traffic. When possible, insert manhole cover hooks in the hook holes on the side away from moving traffic. Place the covers of opened manholes on the side away from traffic, when conditions permit. In case of two section covers, place one section on each side of the opening.

g. When this is not practical, insert the manhole cover hooks in the holes that permit the cover to be moved in the direction of traffic. Keep the oncoming traffic under careful observation.

h. Replace manhole covers with the same care as used for removing them. Be careful that manhole covers are properly seated when replaced. The bearing surfaces should be free from dirt or ice which might prevent them from fitting properly.

8.5.2 Testing Before Entering Underground Structures

WARNING

The structure should be tested to ensure that the atmosphere is safe for workers. Entering a manhole with an oxygen deficiency can cause sudden unconsciousness and death by hypoxia (blood starvation). Manholes containing less than 19.5 percent oxygen are not to be entered without a supplemental oxygen supply.

8.5.2.1 Hazardous Conditions in Underground Structures

WARNING

Toxic or combustible gases may be present or there may be a lack of oxygen in unventilated subsurface structures.

a. Toxic or combustible gases. Since subsurface structures are subject to the accumulation of combustible or toxic gases, they should be considered hazardous until proven clear by test. Combustible gases found in manholes or vaults are usually natural gas or hydrocarbon fuels. Toxic gases usually encountered are hydrogen sulfide, carbon dioxide, or mangrove gas (southern coastal areas).

b. Lack of oxygen. No one is permitted in unvented vaults or manholes unless forced ventilation is provided or the atmosphere is found to be safe by testing for both oxygen deficiency and the presence of explosive gases or fumes. Provisions should be made for a continuous supply of air when necessary.

8.5.2.2 Testers for Underground Structures

WARNING

The manhole or unvented vault should be tested in accordance with Navy or local confined space entry program requirements. Testing should be made only by trained technicians with approved testers prior to entering, after the technician first determines that the instrument is in proper working order and correctly calibrated. These tests will be made as soon as the manhole cover is removed.

a. Oxygen deficiency tests should be performed with an approved and calibrated oxygen deficiency indicator. Operation of the indicator instrument should be in accordance with the manufacturer's instructions.

b. For the detection of "toxic gases," one of the simple effective colormetric detectors (color changes to indicate concentration) may be used. Hydrogen sulfide can be detected at concentrations as low as one part in 1,000,000. These detectors can be obtained commercially, and a universal test kit is available which will detect concentrations of carbon monoxide, hydrogen sulfide, and numerous other gases. An approved portable unit should be used to measure the amount of combustible and toxic gases in the manhole atmosphere.

8.5.2.3 **Elimination of Combustible or Toxic Gases**

WARNING

Never enter a manhole until test results indicate that the manhole is free of combustible or toxic gases.

a. If tests made upon removing the manhole cover indicate that the atmosphere is satisfactory, the manhole or vault may be entered and worked in. Additional tests should be made when each crew begins work; the test interval should not exceed 8 hours. When the manhole is covered with a tent or tarpaulin, the test interval should not exceed 2 hours. Place the tent or tarpaulin so that an opening is left in the covering for ventilation.

b. If more than the allowable trace of gas is found on the initial test, ventilate the manhole or vault with a power blower for a minimum of 10 minutes, then make a second test with the blower running. If the test is satisfactory, the manhole or vault may be entered. Make this test away from the direct blast of the blower. If gas is again found on the second test, continue to ventilate the manhole with a power blower until the test is satisfactory.

c. Work can then be started in the manhole, provided adequate power blower ventilation is continued. There should be enough ventilation to hold the quantity of gas in the manhole to an allowable value until the work has been completed and the cover is replaced. While working in a manhole being ventilated with a power blower because of previous gas detection, test the atmosphere every hour. If the blower stops, leave the manhole at once and do not re-enter until ventilation has been restored and the atmosphere test is satisfactory. Operate the blower outside of a manhole tent or tarpaulin.

8.5.2.4 **Structure Condition Change Retesting Requirements**

WARNING

Pumping out structure water or removing duct line plugs can allow gas into the structure.

a. After a manhole has been pumped, the removal of the water may permit gas to flow into the manhole. Make the test just above any open ducts. If a test indicates that gas is entering, ventilate the manhole.

b. Immediately upon the removal of the duct plugs, make a test just above the opened duct. If gas is entering, ventilate the manhole.

8.5.2.5 **Emergency Entrance Into Underground Structures**

WARNING

If, in an emergency, it becomes necessary for a worker to enter a manhole or vault where gas is present, the worker will use an approved self-contained breathing apparatus (SCBA) and a safety harness with an attached life line attended by another worker stationed at the manhole or vault opening.

8.5.3 **Ventilation of Underground Structures.** There are three methods that can be used to ventilate a structure. They are the forced air, natural, and sail methods.

8.5.3.1 **Forced Air.** The forced air method consists of a power blower, blowing air into the manhole. The blower hose is placed into and on the bottom of the manhole, forcing fresh air to circulate and oxygen-deficient air to be forced out. This is the best method of ventilating a manhole.

8.5.3.2 **Natural Method.** This method consists of taking the manhole cover off and letting the internal air escape as much as it can. This method of venting a manhole is the least effective because a gas heavier than air could remain in the bottom of the manhole. Use this method of venting a manhole only as an emergency measure.

8.5.3.3 **Sail Method.** The sail method (figure 12), ventilates the manhole by using the wind. A piece of plywood or some other material is placed over the manhole. The edge of the plywood facing the wind is lifted up until the plywood forms about a 45 degree angle with the manhole opening. The wind enters the manhole, forcing possible contaminated air out of the manhole.

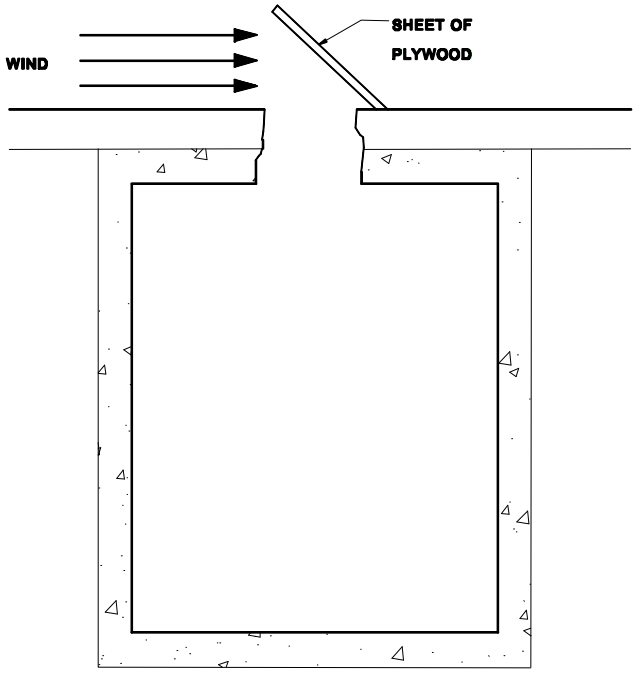

Figure 12
Sail Method of Manhole Ventilation

8.6 **Work Inside Underground Structures.** Work inside underground structures requires special attention to general safety, familiarity with the cable and equipment being worked on, and safety aspects applying to such underground work.

8.6.1 **General Inside Structure Safety.** All work should be done in a manner that observes the following precautions

a. Continuous adequate ventilation is required.

b. While work is being performed in manholes or vaults, a worker should be available on the surface in the immediate vicinity to render emergency assistance if required.

c. A ladder will always be used when entering or leaving a manhole or vault. Climbing into or out of manholes or vaults by stepping on cables or cable supports is forbidden. Manhole ladders, when not in use, should be placed so as not to be a hazard to workers, pedestrians, or vehicular traffic.

d. Use only flashlights or facility approved lighting units for illumination in manholes.

e. Tool handling should be done in a manner that protects the workers and work area. Always place tools or materials a safe distance from manhole openings, where they will not cause

a stumbling hazard or come in contact with energized conductors or equipment. Do not throw tools or materials into or out of manholes. Use canvas buckets or hand lines for lowering tools or equipment into and removing them from manholes. Warn workers before lowering tools. Always provide a windless handcrank subsurface worker rescue or an approved retracting lifeline system.

f. Before starting work, an inspection should be made to determine if there are any dangerous conditions such as burnt or cut cables or loose or defective ladders. Use of portable ladders is preferred. Ladders in manholes, if provided, may have rusted and become unsafe. Before using open flames in manholes or excavations where combustible gases or liquids may be present, such as near gasoline service stations, the atmosphere should be again retested and found safe or cleared of the combustible gases or liquids. When open flames need to be used in manholes, extra precautions should be taken to provide adequate ventilation.

g. Low-voltage (less than 600 volts) equipment is especially hazardous in or around subsurface structures. Motor frames and equipment cases may be energized by electrical conductors with frayed or damaged insulation. The faults may occur only momentarily or may be prolonged through high-resistance grounding paths. Contact with energized equipment surfaces and the damp and well-grounded floors and walls often results in electrocution. It is recommended that only pneumatic tools and low-voltage (24-volt) lighting systems be used in maintaining subsurface vaults and facilities.

8.6.2 Precautions Before De-energizing Underground Lines

WARNING

The worker should be familiar with the system before proceeding to any necessary tagging of cable and equipment. Every possible precaution will be exercised to correct identity (voltage, circuit, and phase) of cable or apparatus to be worked upon.

a. Be sure cables are properly identified before beginning any work. All cables should be tagged, but in the event that they are not or that tags have become illegible or lost, obtain specific instructions rather than take a chance. Retagging is required before work can begin.

b. The external appearance of medium-voltage and low-voltage cables is often similar. For this reason, a very careful check should be made of duct locations and tag numbers before starting work. Any errors found in the tagging of cables or in the manhole records or maps should be immediately reported to the supervisor. Work should not continue until permission is given by the supervisor. Under no circumstances should an identification tag be removed or placed on a circuit without direct permission from the supervisor.

8.6.3 **De-energizing Underground Cables and Equipment.** Working on cable and equipment should normally be done after de-energizing the cable or apparatus to be worked on, whenever possible, and consistent with facility mission requirements.

8.6.3.1 **Isolation of Underground Lines**

WARNING

Provide complete isolation of cable and protection against premature energizing by grounding the cable. An absolute check to ensure that no potential exists should be made prior to cutting into any cable. Remove the cable (lead or other) sheathing and test for voltage. Use only approved voltage detectors.

8.6.3.2 **Underground Cable and Equipment Grounding.** Grounding can be done by the cable spike method which uses a wire tong or C-clamp device attached to a hot stick to provide a proven ground. Do not use a pike pole as a spike for this grounding method as the pike does not have the rating of a hot stick. Care should be exercised to ensure the cable has been grounded for a sufficient length of time to drain off any static charges.

WARNING

The item will be grounded from all possible sources of power (including transformer secondary backfeed) and positively traced from the grounded point to the work location.

8.6.4 **Requirements for Working on Underground Cables and Apparatus**

WARNING

All workers should maintain the work distance given in Table 11 as appropriate to the voltage level and whether the item being worked on is energized or de-energized. Be aware of what items are de-energized and what items are energized.

8.6.4.1 **Underground De-energized Work.** All cable and apparatus should be tagged properly.

8.6.4.2 **Protection Against Energized Parts.** When a worker is in proximity to live parts, rubber blankets or other suitable insulating barriers should be placed in the correct position to prevent accidental contact.

8.6.4.3 **Underground Working Procedures.** Avoid hazards by observing the following procedures.

a. The secondary voltage of any transformer fed from a de-energized feeder cable should be checked. The cable should be grounded on each side of the work location.

b. Neutral conductors should not be opened without the prior installation of suitable bypass conductors.

c. Avoid moving energized underground cables. If cables must be moved, they will be moved with extreme care to avoid damage to the cable insulation. Moving will be done only at the discretion of the foreman in charge. Lead-sheathed underground cables will be moved only when approved by the supervisor. Prior to moving energized electric underground cables, they will be examined for any defects that might result in failure if the cable is moved. No energized cable may be moved where such movement requires changing bends. All energized cables will be handled with rubber gloves or hot-line tools as appropriate to the voltage level.

d. Before separating or connecting a dead-break type separable connector, the circuit should be de-energized and tested dead utilizing the associated capacitive test point and an approved test device. Only suitable live line tools will be utilized in separating or connecting these separable connectors, unless the circuit is tested de-energized and grounded.

e. Avoid sparks in connecting or disconnecting cables, apparatus, or switching devices.

8.6.4.4 **Grounding Switch Operation**

WARNING

Before operating a primary grounding switch, the authorized operator should make certain of the following:

a. Personnel are at the correct location.

b. The tags on the feeder cable and equipment in the vault or manhole bear the same number as shown on single line drawings.

c. Network protectors are in the open position or, in the case of radial transformers, which the secondary fuses have been removed and transformer secondaries are dead.

8.6.5 Cutting of Underground Cables

WARNING

All cable to be cut should be positively identified and de-energized before each cut. Before making an opening in or removing a part of the sheath or sleeve of a cable, the line will be grounded at the first possible grounding point on each side of the work location. Perform all medium and high voltage cable cutting remotely from topside using a guillotine cutter and permit no workers to remain in the space during the cutting. This will isolate workers by a safe distance in the event of an accidental arc-blast when the cut is made. If guillotine cutting is not feasible due to cable configuration, location, or other complications, hand-cutting may be required.

a. Always wear rubber gloves when sawing into a cable or removing the sheathing. Install a metallic jumper between two sides of the location where a cable sheath is to be removed or cut.

b. When a medium-voltage cable is to be cut, a short section of the shielding, if any, will be removed completely from around the cable. Tests will be made with two statiscopes or other approved testing devices, to determine whether or not the cable is de-energized. If no indication of a live cable is obtained, the worker may proceed with the work.

c. When opening a splice in a medium-voltage cable, the sleeve over the splice will be cut completely around near the splice and then cut lengthwise and removed. No effort will be made to remove the compound. Workers will then test over each side of the conductor with two statiscopes or other approved testing devices. If no indication of a live cable is obtained, the compound will be removed. If shielding tape is then encountered, it will be removed and another test made over each side of the conductor with two statiscopes or other approved testing devices. If no indication of a live cable is then obtained, the splice will be cut through until the saw touches one of the conductors. Before sawing further a statiscope test will be made on the blade of the saw.

d. When cutting or opening splices on low-voltage cables, the same procedure as outlined above for medium-voltage cables will be followed, except in testing. To determine whether the cable is energized the insulation will be cut away to the conductor and tested with an approved tester. On multiple-conductor cables, only one conductor will be cut into a time and tests made on at least two conductors before proceeding with the work.

8.7 **Heating Materials.** Heating materials and equipment used in splicing cable will be heated in such manner as to prevent any hazard to the those working in manholes or vaults and to vehicular or pedestrian traffic.

8.7.1 **Elimination Heating Materials Hazards**

WARNING

Observe the following precautions to protect yourself, others, and the workplace.

a. Gloves will be worn while heating or working with hot insulating compound.

b. Furnaces and tanks containing liquefied petroleum gas, such as butane or propane, will not be placed in a manhole or vault.

c. Heating pots for solder, oil, or compound will be safely positioned so that the contents cannot enter the vault or manhole in the event of spillage.

d. Torches or furnaces should be kept at a safe distance from flammable materials.

8.7.2 **Heating Materials Work Precautions**

WARNING

The following work rules apply to the use of torches, furnaces, pots, and soldering devices. Only workers who are familiar with the use of torches and furnaces will be allowed to use them.

a. Only approved soldering pots, furnaces, and ladles in good condition will be used.

b. Keep lighted furnaces or torches 1.2 meters (4 feet) or more from manhole openings wherever practicable and where they will be the least possible hazard to property, workers, and the public. If necessary to use torches or furnaces in manholes, adequate ventilation should be provided to support combustion and provide sufficient air for workers.

c. Solder ladles should be heated before use. Be sure that scraps of cold solder are dry before remelting. Moisture and molten metal should never come in contact with one another because this will cause a splash of hot metal. Bars or pigs of solder, tools, and ladles should be heated over the furnaces before being put into a pot of hot solder. (New workers should be cautioned about this hazard.)

d. Furnaces should be lighted carefully and guarded with a three-sided windshield at all times when burning in public places. Never light or burn furnaces in dangerous locations and never leave them unattended. Lighted or hot torches or furnaces should not be transported in trucks or other moving vehicles.

e. Always take special care not to splash solder on any person or equipment. Soldering pots should not be placed on furnaces without a pot guard. Never attempt to do soldering unless a fellow worker is stationed on the ground as a guard. If necessary, rope off a safe distance. Before lowering hot solder or compound into a manhole, warn those in the manholes to stand clear. Do not lower anything until given instructions from below to do so.

f. If compound kettles have no breathers, punch holes through the top crust of the compound to the bottom before heating so that air and moisture can escape. Heat the compound slowly.

g. Do not allow paraffin to reach a temperature exceeding 198 degrees C (390 degrees F). Procedures for use of bottled liquid fuels. Follow the manufacturer's instructions for all operations, such as installing the torch on and removing it from fuel cylinder, lighting the torch and using it, and cleaning the torch orifice. Always remove the torch from the fuel cylinder after the job is completed and it is no longer needed. Operate only in well-ventilated areas. Do not store full cylinders near heat or fire, or in living spaces.

h. Place compound kettles on the hoods or plates provided and never directly on top of the furnaces.

Section 9. SHORE-TO-SHIP ELECTRICAL POWER CONNECTIONS

9.1 **Connect/Disconnect Performance Responsibilities.** Electrical shore facilities are utilized to provide dockside electrical service to ships operating in a cold iron mode. The shore's electrical supervisor (SHORES ES) is responsible for the power provision of cables connected to shore receptacles in pier electrical outlet assemblies and rigged to the ship. The ship's electrical officer (SHIPS EO) is in ultimate charge in providing cable connections to the ship's electrical bus fed by the ship's generators and dictating when shore electrical power is energized or de-energized to supply this bus. General steps and performance responsibilities are given in Tables 39 and 40 for ship connects and disconnects with references to specific subsections for step-by-step procedures.

Table 39
Shore-to-Ship Electrical Connect Responsibilities

I. Ships logistic requirements sent to shore before docking by SHIPS EO. (Refer to par. 9.5.2.2.)

II. Shore provision before ship docks by SHORES ES.

   A. Laying, inspection, and testing cable assemblies on dock. (Refer to par. 9.7.1.1.)

   B. Checking shore receptacles. (Refer to par. 9.7.1.2.)

   C. Inserting cable plugs into shore receptacles. (Refer to par. 9.7.1.3.)

III. Shore-to-ship cable rigging after ship docks by SHORES ES. (Refer to par. 9.8.)

IV. Ship's transfer from ship's generators to shore electrical power by SHIPS EO. (Refer to par. 9.9.)

Table 40
Shore-to-Ship Electrical Disconnect Responsibilities

I. Ships transfer from shore electrical power back to the ship's generator by SHIPS EO. (Refer to par. 9.10.)

II. Shore provision of disconnecting cable plugs and unrigging and removing cables by SHORES ES. (Refer to par. 9.11.)

9.2 **Ship's Main Electrical Service Components.** The specific safety requirements given apply to the cable assemblies from the pier's electrical outlet assemblies (turtlebacks) to the ship's electrical bus. There are other components of the shore's medium-voltage electrical distribution system which are used to supply substations that in turn supply the pier electrical

outlet assemblies. The safety requirements for the pier electrical outlet assemblies which supply line side components are covered by earlier sections. However since they are provided for ships power in addition to permanent pier electrical loads they are described for a clearer understanding of the dockside electrical distribution system.

9.2.1 **Shore Medium-Voltage Distribution System.** The facility's primary electrical distribution system normally operates in the medium-voltage range between 5 kV and 35 kV. For permanent pier service dual primary feeders from the shore's primary system is preferred. Pier systems may also be furnished with single feeders. These feeders serve substations which stepdown the distribution system's primary voltage to the required secondary voltage for ships electrical service of either 4.16 kV or 480 volts.

9.2.2 **Pier Substations.** Substations may consist of above ground substations of the nonfixed type installed on the top of a pier or units of the fixed type installed in vaults located under the pier. Fixed substations are fed by primary cables installed in duct lines. Nonfixed substations are skid-mounted and fed from a shore installation substation consisting of a medium-voltage disconnect assembly. Nonfixed substations are supplied by primary cable assemblies installed on the pier and are connected to the electrical distribution system source and the substation by primary voltage pier coupler plugs and receptacles in electrical connection outlet assemblies. Both types of substations contain primary switch(es), the step-down transformer, and secondary circuit breakers supplying the pier electrical outlet assemblies for ship-to-shore power cables. Pictures A, B, C, and D show these component elements.

9.2.3 **Ship-to-Shore Pier Electrical Outlet Assemblies.** Ships service is from pier electrical outlet assemblies which contain multiples of three-pole, 500-ampere receptacles rated either for 450-volts ships service or 4.16-kV ships service as appropriate to the pier's ship electrical service requirement. Receptacles are interlocked with their associated substation secondary circuit breaker for safety reasons. Pictures E and F show outlet assemblies for 480-volt and 4.16-kV services respectively.

9.2.4 **Ship-to-Shore Power Cables And Connectors.** Portable shore-to-ship power cables are rated for operating at either medium voltage (rated at 601 to 5000 volts, three-phase, three-wire, ac) or low voltage (450 volt, three phase, three-wire ac). All shore-to-ship power circuits operate ungrounded between the shore enclosure and the ship.

Note

Splices are not allowed in 4.16-kV power cables. Pictures G, H, I, and J show examples of cables in place and various connections.

Picture A. **Electrical connection outlet assembly with a 15-kV receptacle.**

Picture B. **Inside a pier vault housing a substation**

Picture C. **A skid-mounted substation**

Picture D. **A skid-mounted substation with camlock connections.**

Picture E. **A 480-volt pier electrical outlet assembly without cable connections.**

Picture F. **A 4.16-kV pier electrical outlet assembly and outlets.**

Picture G. **A 480-volt pier electrical outlet assembly and cable connections.**

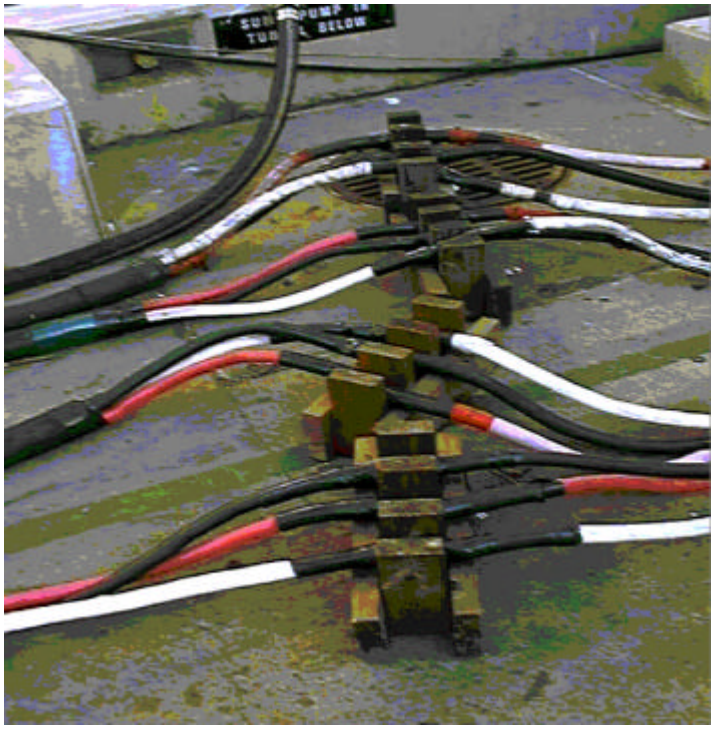

Picture H. **A 480-volt shore-cable to ship-cable splice connection in place.**

Picture I. **A 480-volt shore-cable to ship-cable with camlock connection.**

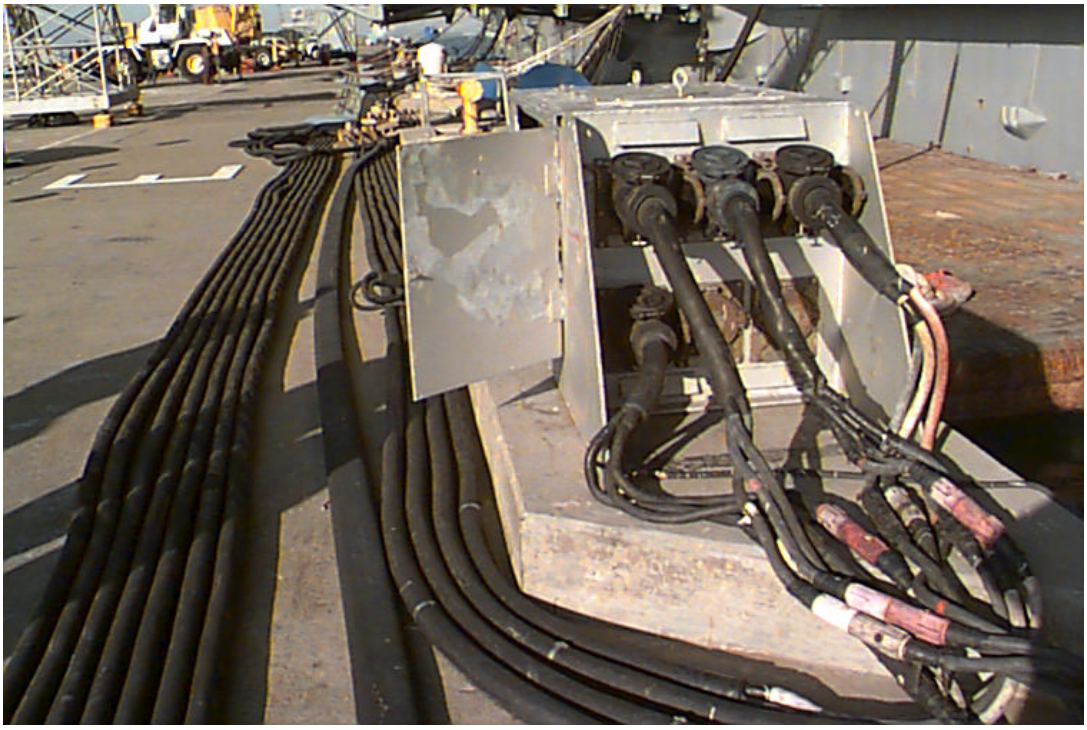

Picture J. **A 480-volt shore-cable to ship-cable plug and receptacle connection in place.**

9.3 **Relation of Ship's Electrical Service Components.** An understanding of the physical and electrical arrangements of these components is necessary in understanding the safety problems involved in the basics of utilizing portable power cables to feed shore electrical power to a ship's electrical bus.

9.3.1 **Equipment Physical Relationships.** Figure 13 indicates diagrammatically the physical relation of the ship and its power cable connections to the pier electrical power service. Ships may have one, two, or three service ports requiring connections to pier electrical outlets. Power cables need to be positioned to be of equal length and without sharp bends. Power cables may need protection as covered later.

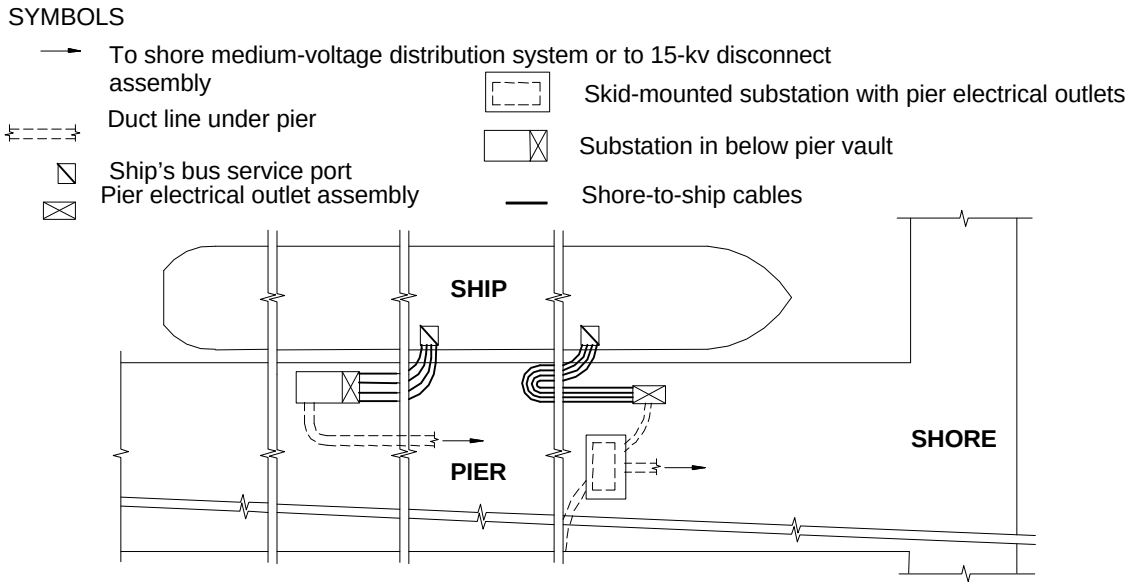

Figure 13
Shore-to-Ship Portable Power Cable Location Diagram

9.3.2 **Electrical Circuit Arrangement.** Figure 14 shows a simplified one-line diagram covering the ship's main electrical service components. Service components consist of those whose safety aspects are generally covered by Sections 6 and 8 and those that are covered specifically in this section. A vault substation is shown. Circuit is similar for skid-mounted substations except without vault requirements. Pier outlet assembly may be part of a skid-mounted substation. Primary selective system shown is preferred system but is not always provided.

9.3.2.1 **General Electrical System Safety.** The maintenance and operation safety aspects of the medium-voltage distribution system, substations, vaults, and low-voltage cables in duct lines is covered in previous sections.

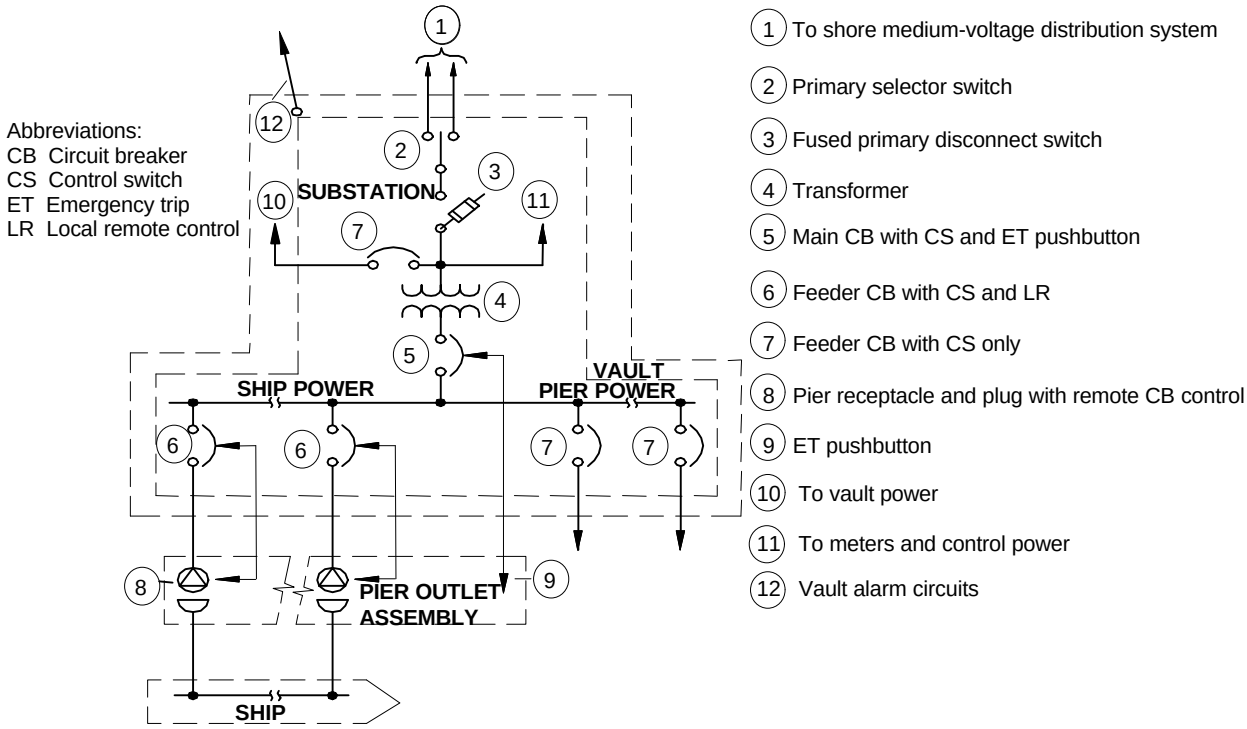

Figure 14
Preferred Ship-to-Shore Circuit Arrangement

9.3.2.2 **Specific Shore-to-Ship Electrical System Safety.** This section covers connection of portable power cables to shore electrical receptacles and ship electrical buses. Connection is a divided responsibility as covered by Table 38.

Note

Always follow the procedures given in Figure 15 to ensure that energizing the ship is done in a safe manner.

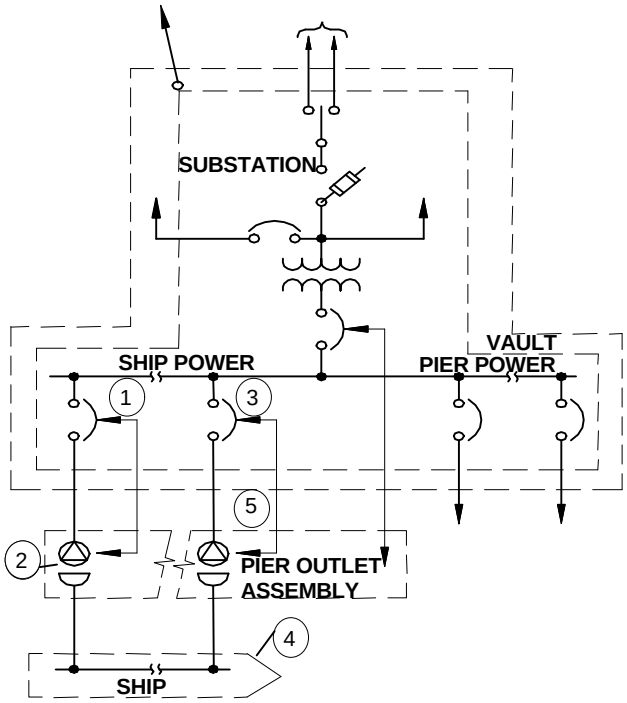

Notes on order of procedure

1. Switch to local control when working at the substation and when plugging in shore-to-ship cable plugs
2. After receiving clearance from the ship's electrical officer, seat the power plug correctly which mechanically makes up the microswitch that allows the plug's circuit breaker to be closed.
3. Switch circuits to remote control at the pier outlet assembly.
4. This connection will be made by ship's personnel with the circuit breaker open.
5. Do not close circuit breaker by remote control unless directed by the ship's electrical officer.

Figure 15
Procedures in Safely Energizing a Ship From a Shore Electrical Circuit

9.4 Unusual Shore-to-Ship System Hazards

CAUTION

The additional risks posed by shore-to-ship power cable connections involve:

a. Split personnel shore/ship responsibilities.

b. Portable power cable and outlet safety assurance.

c. Electrical equipment accessibility and working space.

d. An ungrounded, adequate and correctly phased electrical power input.

e. Minimizing any parallel operations.

9.4.1 Split Personnel Responsibilities

Note

It cannot be overemphasized how important standard operating procedures are in eliminating the hazards of split responsibilities between shore and ship. Use of this section will result in Navy-wide standard training of both shore and ship personnel in safely connecting and disconnecting cables between a pier and a ship.

9.4.2 Portable Power Cable and Outlet Safety Assurance

WARNING

Harsh waterfront environments provide salt spray, high humidity, and cold temperature conditions. All these result in more rapid deterioration of permanent installations. Portable power cables, if not adequately barricaded are subject to abuse from the wheels of vehicles used in industrial operations. Families welcoming Naval personnel home from the sea and even Naval personnel and contractor personnel working on piers have no understanding of the dangers from a damaged energized power cable which is installed in a position accessible to the public.

9.4.3 Electrical Equipment Accessibility and Working Space

WARNING

Electrical equipment in underground vaults is not readily accessible and may not meet current NEC working space requirements.

9.4.3.1 Readily Accessible

WARNING

The NEC defines ready accessible as capable of being reached quickly for operation, renewal, or inspections, without requiring those to whom ready access is requisite to climb over or remove obstacles or to resort to portable ladders, chairs, or other such devices. Therefore all workers in vaults need to meet the confined space requirements of Section 8.

9.4.3.2 **Working Space.** The NEC defines working space as sufficient access provided and maintained about all electric equipment to permit ready and safe operation and maintenance of such equipment.

a. Working space in vaults has been provided in accordance with the NEC requirements applying at the time the vault was built.

b. As with all safety aspects affecting both the public and workers, safety requirements have, over the years, become more rigorous.

c. Although NEC current requirements do not apply to vaults built to previous NEC editions, in line with Naval safety requirements, the NEC current requirements should be compared by each activity with actual working space provisions.

d. Each activity should evaluate the comparisons as to their effect on workers safety and provide SOP's as necessary to assure safe working conditions.

9.4.4 **Ship's Electrical Power Input Safety**

Note

Ship's electrical input cables will provide an ungrounded correctly-phased, correctly-cable-oriented system providing an adequate number of power cables to serve the ship's load.

a. The ship's hull serves as the ground for the ship's electrical service. A ground connection between the shore ground and the ship's ground can result in damaging circulating currents.

b. Improper matching of phase rotation will result in the ship's motors operating in the wrong direction. Connecting two or more power cables to a ship requires that all the same phase cables be connected together.

c. The number of power cables should meet the ship's electrical officer's request that is based upon the ship's activity in port. When more than one feeder cable is required, all cables will be of the same length and size (within plus or minus 10 percent) to minimize unequal load distribution. Low-voltage receptacles have a power supply capability of 386 kVA. (Per NEC Table 310-17, 75 degree C for 500 kcm at 450-volts for continuous service or 620 amperes x 450 volts x 1.732 x 0.80 ÷ 1,000 = 386 kVA). Medium-voltage outlets have a power supply capability of 2075 kVA. (Minimum cable rating is 360 amperes or 360 amperes x 4,160 volts x 1.732 x 0.80 ÷ 1,000 = 2,075 kVA).

9.4.5 **Parallel Operation**

WARNING

Parallel operation of the ship and shore systems may be done only as given below.

a. Parallel operation of the ship generators and the shore power system is prohibited except for short periods of time to allow for load transfer to or from shore power. Transfer time should not exceed 10 seconds.

b. Paralleling shore transformers through the ship's electrical bus without prior activity approval is a violation of safety practices and may result in circulating currents, overheated cables, unbalanced loads, and excessive shore circuit current which could damage property and result in personal injury.

9.5 **Supporting Shore-to-Ship Safety Requirements.** The previous sections cover the general electrical safety requirements for operating and maintaining shore electrical distribution systems. The unique power cable connection/disconnection operations for shore-to-ship electrical power service requires specialized training and appropriate SOP's.

9.5.1 **Specialized Shore-to-Ship System Training.** Qualifying for this work requires training that addresses the operation, maintenance, and testing of the power cable/connector assemblies; the ability to connect cable extensions; and the understanding of cable phasing and paralleling checking methods. Workers should also be able to lay and protect cables on piers and to operate cable rigging devices at both the ship's cable access ports and at the cable storage areas. They should be familiar with operating the ungrounded electrical connection required to be compatible with the ship's electrical system. Workers should be qualified for working on and be familiar with the safety requirements for medium-voltage distribution systems supplying substations and electrical power outlet assemblies supplying shore-to-ship electrical power.

9.5.2 **Specific SOP's**

Note

SOP's applying to this work should be based on requirements given herein as adjusted for the activity's operating procedures. The SOP's should address the following areas and be used in the day-to-day pre-job briefing.

9.5.2.1 **SOP Preparation Responsibility.** The activity responsible for shore-to-ship electrical service should prepare general SOP's with space for each individual organization

requirement correctly filled in for each specific ship's service and for each service period. SOP's will be distributed to all personnel involved.

9.5.2.2 **Specific Organization Requirements.** The names of shore personnel and their responsibilities will be listed. The name of the ship and the docking location will be given. The ship's specific requirements as to the following will be noted.

a. Voltage of the estimated ampere load requirements including supershore electrical power.

b. Number of ship-to-shore power cables required.

c. Type of cable terminations, in-line connections, jumpers, as required.

d. Identification of any interface problems.

e. Special paralleling requirements if any longer than 10 seconds for ship-to-shore paralleling or paralleling between shore transformers.

9.5.2.3 **Priorities**

Note

Determine if there are any unusual job hazards. Identify the power cable rigging device (boom trucks, cranes, fork lifts) and whether their location requires structural approval by a facility engineer of their proposed location. Verify that any construction work will not interfere with power cable placing and rigging. Determine special safety provisions. (See picture K.)

Picture K. **A cable being reeled by a boom truck.**

a. Power cable protection may require barricades to protect them from damage. (See picture L.) Contractor work may require crossing power cables with vehicular equipment of sufficient weight to cause cable damage. Welcoming crowds at a ship's homecoming may require crowd control from security forces to maintain safe approach distances (see Table 12). Identification of cable voltage and other appropriate safety hazard information should be provided on all cables in conformance with activity requirements.

b. If there is any possibility that pier vault access is required emergency rescue equipment will be readily available (see Picture M).

Picture L. **Cable protection safety barricades.**

Picture M. **Effective vault rescue.**
(Courtesy of DBI/Sala)

9.5.2.4 **Normal Procedures.** List purpose of the SOP, potential energy sources, tools and personal protective equipment, references to other SOP's, this handbook's sections, and OSHA sections and procedures, as applicable. The procedures may be broken down into individual SOP's such as the following activities.

a. Reel truck operation.

b. Boom truck operation.

c. Moving power cables on pier.

d. Setting up berths for shore electrical power.

e. 480-volt ship connect.

f. 480-volt ship disconnect.

g. 4160-volt ship connect.

h. 4160-volt ship disconnect.

i. Shore power location of accidental grounds on ship's service electrical power called in by ships.

j. Remote operation of shore circuit breakers from the pier electrical outlet assembly.

k. Shore power cable assembly.

l. Operating camlock vulcanizers.

9.5.2.5 **Emergency Procedures.** Emergency procedures should be set up for mishap reporting and summoning medical aid as covered in Section 4. Foul weather conditions requiring changes to normal procedures will be covered.

9.6 **Portable Shore Power Cables and Receptacles.** Portable shore power cables and receptacles conform to specific specification requirements.

9.6.1 **Low-Voltage (480-Volt) Power Cable Specification.** Cable will be three-conductor, flexible, unshielded, 600-volt, type THOF-500 kcm complying with MIL-C-915, Cable and Cord Electrical, for Shipboard Use for 450-volt three-phase, 60-hertz ungrounded ship's service power (order number THOF-500-NSN 6154-01-008-4568). Single-conductor cables may be used at some installations but is not recommended.

9.6.2 **Medium-Voltage (4,160-Volt) Power Cable Specification.** Cable will be three-conductor, 8000-volt with an overall ethylene propylene jacket designed for continuous flexing service and operation in severe environments. Cable should be similar to SHD-GC commercial mining cable without the ground or ground-check conductors. Comply with NEMA WC-8 (ICEA S-68-516), Ethylene-Propylene-Rubber-Insulated Cable for the Transmission and Distribution of Electrical Energy. Cable will be rated for at least 360 amperes.

9.6.3 **Power Cable-in-Use Insulation Resistance Values**

WARNING

The insulation resistance of each cable should be tested before each use.

9.6.3.1 **Shore Criteria for Cable Assemblies.** Cables having insulation readings below 1 megohm for 480-volt service cables and 5 megohms for 4,160-volt service cables will not be placed in service. Shop testing and repair will be initiated for cable not meeting these requirements.

9.6.3.2 **Ship Criteria for 480-Volt Power Cable.** Ship's service voltage is a 480-volt system using 600-volt cable. Insulation resistance should not be less than 280 megohms per meter (920 megohms per foot) in warm ambient temperature or 1,676 megohms per meter (5,500 megohms per foot) in cold ambient temperature. A warm ambient temperature is defined as a climate or a condition in which the entire cable is in a heated space and not in contact with the ship's hull. A cold ambient temperature is defined as a cold climate or a condition in which most of the cable is in an unheated space or in contact with the ship's hull.

9.6.3.3 **Explanation of Criteria Differences.** The shore criteria is based on a cable assembly of 38 meters (125 feet) plus or minus 7.6 meters (25 feet).

9.6.4 **Low-Voltage Receptacles, Plugs, and Protective Circuit Breakers.** The system provides a 480-volt, three-phase, three-wire, ungrounded 60-hertz source to the ship.

9.6.4.1 **Shipboard Connections.** Generally use a MIL-C-24368 "Connector Assemblies, Plug Assembly, Power Transfers, Shore-to-Ship and Ship-to-Ship," type 1 connector (plug) in accordance with DOD-STD-1399, "Interface Standard for Shipboard Systems, Section 300, Electrical Power Alternating Current," Figure E15 except as follows.

a. Portable shore power cable jumper supplied by the ship where piers do not have MIL-C-24368, Type 2 receptacle and plug assemblies or

b. Cables serving submarines will have MIL-C-24368, Type 5 outboard plug connection permanently attached to the shipboard end.

c. In-line connection (used only where operationally necessary) may be single-pole connectors (MIL-C-24368 type 4) or three-pole connectors (Cage 90129 male and female).

9.6.4.2 **Pier Low-Voltage (480-Volt) Electrical Outlet Assemblies.** The assembly utilizes a MIL-C-24368, type 1 three-pole 500-ampere 480-volt receptacle with matching plug. Details of units are shown on NAVSEA Electric Plant Installation Standard Methods (EPISM) Section 2, Group E, sheets 13 through 19 with sheets 14 and 15 determining shore power phase rotation. (See figure 16.)

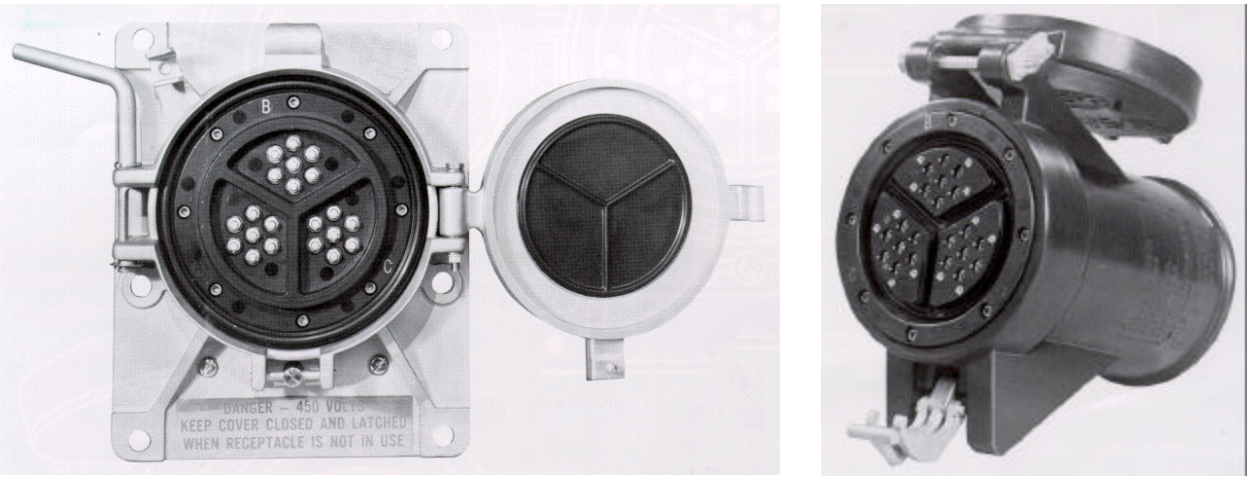

Male receptacle Female plug

Figure 16
Low-Voltage (480-Volt) Shore Receptacle
Courtesy Crouse-Hinds Incorporated

9.6.4.3 **Low-Voltage (480-Volt) Receptacle Protective Circuit Breakers.** These low-voltage, metal-enclosed drawout type power circuit breakers are air-magnetic, electrically-operated, with 120-volt ac close, 48-volt dc trip and have current limiting fuses. Circuit breakers are interlocked with their associated receptacles so that the circuit breaker will trip automatically if an attempt is made to remove the assembly plug or open the receptacle cover. A remote close/trip of the circuit breaker is provided at the receptacle assembly.

9.6.5 **Medium-Voltage (4,160-Volt) Receptacles, Plugs, and Protective Circuit Breakers.** The system providers a 4,160-volt, three-phase, three-wire, ungrounded, 60-hertz source.

9.6.5.1 **Shipboard Connection.** Generally use a MIL-E-16366, Terminal, Electrical Lug and Connector Splices, Crimp Style, two-hole bolted lug type terminals.

9.6.5.2 **Pier Medium-Voltage (4,160-Volt) Electrical Outlet Assemblies.** The assembly utilizes a three pole, 500-ampere, 4,160-volt receptacle with a matching plug. Units have the Mine Health Safety Administration approval, are provided with a safety interlock, and have been modified to remove a ground cable connector. (See Figure 17.)

Female socket

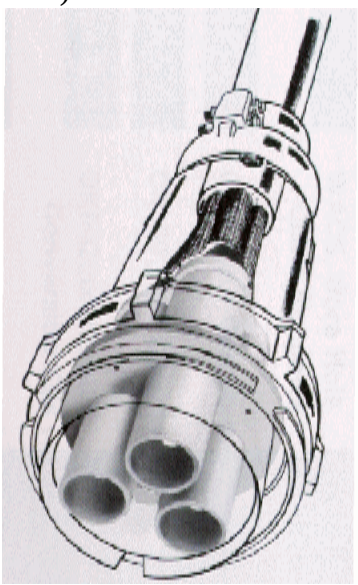

Male plug

Figure 17
Medium-Voltage Shore Receptacle
Courtesy Adalet-PLM

9.6.5.3 **Medium-Voltage, (4,160-Volt) Receptacle Protective Circuit Breakers.** These medium-voltage, 4,160-volt, air or vacuum type, circuit breakers have a long time trip set at 400 amperes and are key-interlocked with their associated receptacles to prevent insertion/removal of the receptacle connector unless the circuit breaker is open.

9.7 **Ship Connection Procedures Before Ship Docks.** A Logistics Requirement (LOGREQ) message, which describes power and general berthing requirements, will normally be received from the arriving ship prior to entering port. This information, in conjunction with the berthing assignment received from Waterfront Operations, will allow the Shore-to-Ship Group to prepare the berth prior to the ship's arrival.

9.7.1 **Laying, Inspecting, and Testing Power Cable Assemblies.** Power cables should be removed from shore storage and transported to the pier where the ship will dock. Qualified personnel should proceed as follows for each cable assembly connection.

9.7.1.1 **Laying Power Cable Assemblies.** This procedure involves moving the power cables from the storage place to where it is laid out on the pier.

a. The only vehicles authorized to drag power cables on the piers are a shop mule, a line truck, a reel truck, or a boom truck. Operators should have a valid state commercial drivers license (CDL), should have a current medical examination, and should be physically and mentally fit to operate the vehicle. In addition, boom truck operators should have a valid category 4 crane operator's license.

b. Perform vehicle use SOP.

c. Check pier area for obstructions that may prevent the shore power set up. If obstacles are present contact your work leader or foreman to inform them of the problem.

d. Place vehicle in position. Whenever possible, use a second person when backing up or placing in tight space.

e. Whenever loading or unloading the operator should ensure:

(1) The vehicle is operated safely in accordance with training procedures.

(2) Barriers are set to proper distance.

(3) Wheel chocks are placed down.

(4) Sets of cables are connected together.

(5) No unauthorized persons are in the area that may be struck from swinging or falling cable.

(6) For boom trucks, outriggers are not blocked by any obstructions and are not set on top of vault covers, steam covers, or manholes. The boom should not swing forward of the outriggers.

(7) For reel trucks, place stabilizer jacks.

9.7.1.2 **Moving Power Cable Assemblies on Pier.** Be sure each set of power cables is dragged as a unit.

a. Cables should not be permitted to lay on sharp or ragged objects such as gunwales. Sharp bends should be avoided. The cables should lay in wooden saddles or be wrapped in canvas. Splices and connectors should be raised from the deck or pier for protection against water contamination. Ensure cables are of sufficient length to allow enough slack for the rise and fall of the tide, but not of sufficient length to permit them to dip into the water or become wedged between the ship and pier.

b. Lay out the cables between the supplying shore power outlet and the ship's cable port. Lay out excess cable in a manner so as to minimize damage and abuse from vehicle and pedestrian movement.

c. Never use feet to hold the cable in place as this may result in a foot or leg injury.

d. Keep vehicles off cable.

e. Ensure cables are of proper length and visually appear to be arranged neatly and safely.

f. Ensure ends of cables are not connected to any shore or vehicle device.

9.7.1.3 **Inspecting and Testing Power Cable Assemblies**

WARNING

Connecting, energizing, and testing shore power cable assemblies should be under the direct supervision of the ship's electrical officer, a qualified leading electrician's mate, and shore activity personnel.

a. Test shore power cable assemblies with voltage tester to ensure cables are de-energized prior to handling.

b. Lay out and visually inspect shore power cable assemblies for any sign of defects such a cracks, bulges, or indications of overheating. Inspect cable sheath for cuts, nicks, and gouges. When required, strip insulation from any existing cable splice(s) and inspect for cleanliness, tightness, and good surface contact. Repair all defects and reinsulate. When required, splice and insulate 3 meters (10 feet) of cable length with a plug to each cable of a shore power cable assembly.

c. Open shore power cable assembly covers. Clean covers and cable plugs. Inspect cover gaskets for cuts, tears, cracks, and deformation. Inspect each plug conducting surface for pitting, corrosion, and evidence of overheating. Inspect cable connectors for pitting, corrosion, and evidence of overheating. Apply a light coat of approved grease to cable connectors.

d. Use a megohmeter to measure the insulation resistance between cable assembly conductors and each conductor and ground. A 500-volt megohmeter can be used for 450-volt cables but a 5,000-volt megohmeter should be used for 4,160-volt cables. Record insulation resistance values. Record lowest acceptable value on ship connect/disconnect form. If the cable does not meet insulation resistance requirements (refer to par. 9.6.3) it should be replaced. Initiate shop testing and repair for such cables.

e. Use the megohmeter to verify phase identification markings of the cable assembly to ensure proper orientation.

f. Tag shore power cable assembly with "DANGER-HIGH VOLTAGE" signs. Barricade the work area surrounding the ship's shore power receptacles. Hang plugs on the pier electrical outlet assembly to which they will be connected.

9.7.2 Checking Shore Receptacles

WARNING

Tag out shore power receptacle circuit breakers in accordance with below listed tag out procedures or local activity prepared procedures. Disconnect equipment such as meters or indicating lights that could be damaged by a megohmeter test or cause a false reading.

a. Remove indicator light and phase meter fuses. Ensure multimeter is in proper operating condition by testing the meter on a known energized source before testing shore receptacle power terminals.

b. Open access cover to each shore power receptacle and use a multimeter to test terminals in each shore power receptacle to ensure that they are de-energized. Clean each cover and receptacle. Inspect each cover gasket and each receptacle gasket for cuts, tears, cracks, and deformation. Inspect each receptacle conducting surface for pitting, corrosion, and evidence of overheating. Operate each receptacle interlock switch manually; movement should be smooth with no binding or sticking.

c. Use a suitable megohmeter and test the insulation resistance between each receptacle terminal and between each terminal and ground. Minimum insulation resistance is one megohm for 480-volt receptacles and 5 megohms for 4,160-volt receptacles. Reinstall indicator light and phase meter fuses. Close shore power receptacle access covers. Remove "DANGER" from shore power circuit breakers and receptacle circuit breakers and replace with "CAUTION" tags in accordance with tag out procedures. Indicate on 'CAUTION" tags that if shore receptacle power interlock and/or power control power transformer fuses are removed or blown, shore receptacle

power cover safety interlock will be inoperative and warn that high voltage will be present if interlock fails.

d. Test shore power receptacle cover interlock switches and indicator lights as follows:

(1) Close shore power receptacle circuit breakers.

(2) Shore power receptacles should be energized.

(3) Ensure indicating lights are illuminated.

(4) Open shore power receptacle access cover; receptacle circuit breaker should trip and indicating light should extinguish.

(5) Use an approved potential difference tester (see 5.1.4.1) and ensure it is in proper operating condition by checking the tester on a known energized source before testing shore power receptacle terminals.

(6) Test shore power receptacle with the tester to ensure it has been de-energized.

(7) Close shore power receptacle access cover.

(8) Open shore power receptacle circuit breakers.

(9) Remove “CAUTION” tags and attach “DANGER” tags to shore power circuit breakers in accordance with tag out procedures.

9.7.2.1 **Inserting Cable Plugs Into Receptacles**

WARNING

Connections are to be made from the ship’s electric bus toward the shore power receptacle. When distance from ship’s electric bus to the shore power receptacle requires splicing of two or more cables, splicing should be completed prior to making any ship or shore power receptacle connections.

a. Use an approved potential difference tester and ensure it is in proper operating condition by testing the meter on a known energized source before testing shore power receptacle terminals.

b. Open shore power receptacle access covers.

c. Use the tester to test the terminals in shore power receptacles to ensure they are de-energized.

d. Insert shore power cable plugs into the shore power receptacle.

9.8 **Shore-to-Ship Power Cable Rigging After Ship Docks.** Upon ship's arrival contact ship's electrical officer, determine cable connection time, provide necessary personnel, and receive ship connect/disconnect form.

a. Check all cable assemblies for proper phase rotation.

b. Check all cable assemblies for proper cable orientation.

c. Check all cables to ensure they are still de-energized.

d. Load cable assemblies from shore to ship for extension by ship's personnel to ship's electrical bus connection.

e. The ship's electrical officer should give permission to shore personnel that shore personnel are to energize shore power at a stated time. At that time after checking that electrical power is supplied to the ship's electrical bus the ship's electrical officer will transfer the ship's electrical load within 10 seconds of shore power input.

9.9 **Ship's Transfer to Shore Power**

WARNING

After the ship has notified that transfer has been completed, the "DANGER" tags will be removed and necessary forms filled out and signed. During the times cables are energized they are prohibited from being moved.

9.10 **Ship's Transfer Back to the Ship's Generators**

WARNING

De-energizing and disconnecting shore power cable assemblies should be under the direct supervision of the ship's electrical officer, a qualified leading electrician's mate, and shore activity personnel.

a. The ship's electrical officer should give permission to shut down shore power at a stated time after the ship's generators have been started, synchronized, and have assumed the electrical load. Paralleling of ship's generators and shore power should be limited to 10 seconds or less.

b. The ship's electrical officer should receive notification that all shore power receptacle circuit breakers are open and that "DANGER" tags have been attached on shore power receptacle circuit breakers in accordance with tag out procedures.

9.11 Shores Disconnection of Cable Plugs and Removal of Cable Assemblies

WARNING

Ensure shore power receptacle circuit breakers are open and tagged, shore power energized indicting lights are extinguished, and shore power cable assemblies disconnected at the source.

a. Disconnect cable assemblies by removing plugs from shore power receptacles.

b. Close shore power receptacle access covers.

c. Remove "DANGER" signs.

d. Lower cable assemblies from the ship onto the pier and reel for shipment to the cable storage area.

e. Notify the ship that all connections have been removed and necessary forms signed and filled out.

INDEX

	PARAGRAPH	PAGE
Aerial lifts	7.2	66
Bucket safety precautions	7.2.6	70
Direction for installations	7.3.1	72
Grounding	5.3.7	39
Insulated buckets	7.2.7	71
Leakage current monitoring	5.1.4.4	28
Manufacturing requirements	7.2.3	67
Maintenance	7.2.8	71
Operation near energized electrical facilities	7.2.1	67
Other requirements	7.2.5	69
Safety	7.2.4	68
Types	7.2.2	67
Climbing and working on poles	7.6	80
Before climbing precautions	7.6.1	80
Crossing pole structures	7.9	90
Balancing support on poles	7.9.2	90
Climbing H-frame pole structures	7.9.3	90
Crossing open air switches on poles	7.9.1	90
Pole climbing and work precautions	7.8	86
Concrete/steel pole or tower climbing precautions	7.8.3	87
General pole climbing precautions	7.8.4	87
Materials precautions while working on poles	7.8.6	89
More than one climber	7.8.1	86
Precautions while working on pole structures	7.8.5	88
Wood-pole climbing precautions	7.8.2	86
Pole climbing equipment	7.7	81
Climber defects	7.7.2.2	83
Climber requirements	7.7.2.1	83
Climbers' tools	7.7.3.4	86
Climbing safety equipment	7.7.1	82
Concrete/steel pole climbing	7.7.3	85
Conditioning climbing equipment	7.7.2.5	84
Fall arresting system provisions	7.7.3.3	86
Leather treatment	7.7.2.3	83
Prohibited climber wearing areas	7.7.2.6	85
Storing climbing equipment	7.7.2.4	84
Wood-pole climbing equipment	7.7.2	82
Type of pole	7.6.2	81

	PARAGRAPH	PAGE
De-energized line work prescheduling	5.2	28
Hazardous energy elimination	5.2.2.1	29
Lock and tag color coding	5.2.2.3	31
Lockout/tagout/tryout instructions	5.2.2.2	30
Lockout/tagout/tryout of hazardous energy sources	4.7	18
Preparation responsibility	5.2.1	29
Safety basics	5.2.2	29
Electrical aspects affecting safety	5.1	23
Combustible gas/oxygen detectors	5.1.4.3	28
De-energized electrical line work	5.1.2.1	25
Energized electrical line work	5.1.2.2	25
Number of qualified workers per hazard exposure	5.1.2.3	26
Phasing testers	5.1.4.2	28
Potential differences	5.1.4.1	28
Safe working distances	5.1.1	23
Safety hazard detection devices	5.1.4	27
Verifying system and equipment provisions	5.1.3	27
Work methods in relation to worker's safety	5.1.2	25
Energized electrical line work	5.4	43
General job-in-progress procedures	5.4.4	47
Insulating guards	5.4.2.3	45
Insulating tools	5.4.2.2	44
Permitted electrical line work methods	5.4.1	43
Prework procedures	5.4.3	46
Rubber goods	5.4.2.1	44
Voltage levels and approved work methods and equipment	5.4.2	43
Energy-storing protective device safety	6.7	57
Capacitor discharge circuits	6.7.3.1	58
Capacitors	6.7.3	58
Choke coils	6.7.2	58
Coupling capacitors	6.7.3.2	58
Disconnecting surge arresters	6.7.1.2	57
Surge arrester contact	6.7.1.1	57
Surge arresters	6.7.1	57
Fusing safety	6.6	56
Bypassing	6.6.5	57
Closed-position fuse holder	6.6.3	56
Fuse handling	6.6.1	56
Open fuse holder	6.6.3	56
Operation of energized fuses	6.6.2	56

	PARAGRAPH	PAGE
Grounding provisions	5.3	31
Approach distances	5.3.3.1	33
Equipotential (single point) grounding	5.3.2	32
Grounding cable	5.3.4.2	34
Grounding clamps	5.3.4.1	34
Grounding cluster bars	5.3.4.4	35
Grounding ferrules	5.3.4.3	35
Grounding for stringing and removing lines	5.3.10	41
Opening or splicing de-energized conductors	5.3.9	40
Placement of grounds	5.3.3	33
Potential differences	5.3.3.2	33
Temporary grounding of aerial lines	5.3.5	36
Temporary grounding of substation current-carrying equipment components	5.3.6	36
Temporary grounding of underground lines	5.3.8	40
Temporary grounding system components	5.3.4	34
Why temporary grounds are necessary	5.3.1	32
Heating materials	8.7	125
Eliminating heating material hazards	8.7.1	125
Heating materials work precautions	8.7.2	125
Instrument transformer safety	6.8	59
Caution	6.8.2.1	60
Circuit opening	6.8.2.1	60
Current transformers	6.8.2	60
Fuse replacement	6.8.1.1	59
Supervisory requirements	6.8.1.2	59
Voltage (potential) transformers	6.8.1	59
Job hazards	4.2	7
Accessibility	4.2.1	7
Aerial work	4.2.1.3	8
Asbestos	4.2.4.1	9
At grade work	4.2.1.2	7
Explosive or hazardous vapors	4.2.5	9
Hazardous environmental impacts	4.2.4	8
Inside work	4.2.1.1	7
Lighting	4.2.3.4	8
Noise control	4.2.3.3	8
Normal environmental impacts	4.2.3	8
Polychlorinated biphenyls (PCB)	4.2.4.2	9

	PARAGRAPH	PAGE
Reminder of electrical hazards in the field	4.3	10
Danger from arcs and blasts	4.3.2	11
Dangers from electric shock	4.3.1	10
Sulfur hexafluoride (SF_6)	4.2.4.3	9
Underground work	4.2.1.4	8
Unusual shore-to-ship system hazards	9.4	136
Electrical equipment accessibility and working space	9.4.3	137
Parallel operation	9.4.5	139
Portable power cable and outlet safety assurance	9.4.2	137
Readily accessible	9.4.3.1	137
Ship's electrical power input safety	9.4.4	138
Split personnel responsibilities	9.4.1	137
Working space	9.4.3.2	138
Wood product preservative treatments	4.2.4.4	9
Work area protection	4.2.2	8
Work in confined or enclosed spaces	4.2.3.2	8
Work in elevated positions or near waterways	4.2.3.1	8
Metal clad switchgear safety	6.10	61
Before circuit breaker drawout requirements	6.10.1	61
Circuit breaker maintenance	6.10.2	62
Safety precautions after circuit breaker maintenance	6.10.3	62
Network protector safety	6.11	62
After network protector maintenance	6.11.3	64
Closing network protectors	6.11.1	63
Network protector maintenance safety	6.11.2	63
Pole linework environment	7.1	66
Dismantling Poles	7.5	79
Additional pole support	7.5.2	79
Minimum pole support	7.5.1	79
Pole removal	7.5.4	80
Truck restraining	7.5.3	79
Pole handling operations	7.3	72
Direction of aerial lift for installation	7.3.1	72
Facility receipt	7.3.3	72
Ground handling	7.3.4	73
Hauling poles	7.3.6	74
Pole contact precautions	7.3.2	72
Temporary pole storage	7.3.5	74
Pole installation requirements	7.4	75
Backfilling around poles	7.4.4.6	79

	PARAGRAPH	PAGE
Digging holes	7.4.2	75
Energized line precautions	7.4.4.5	78
Gin pole method	7.4.4.3	78
Hole covers	7.4.3	75
Pike pole method	7.4.4.1	76
Pole holes	7.4.1	75
Pole setting truck precautions	7.4.4.4	78
Setting poles	7.4.4	76
Winch line method	7.4.4.2	77
Working on or around pole-mounted equipment	7.12	97
Aerial capacitors	7.12.3	97
Aerial connection	7.12.4.3	98
Aerial energized work	7.12.4.1	98
Aerial fusing	7.12.4.5	99
Aerial inspection and maintenance	7.12.4.4	99
Aerial installation	7.12.4.2	98
Aerial power transformers and voltage regulators	7.12.4	97
Aerial service connections	7.12.4.6	99
Aerial surge arresters	7.12.1	97
Aerial switches and fuses	7.12.2	97
Aerial testing	7.12.4.7	100
Portable shore power cables and receptacles	9.6	143
Explanation of criteria differences	9.6.3.3	144
Low-voltage (480-volt) power cable specification	9.6.1	143
Low-voltage (480-volt) receptacle protective circuit breakers	9.6.4.3	145
Low-voltage receptacles, plugs, and protective circuit breakers	9.6.4	144
Medium-voltage (4,160-volt) power cable specification	9.6.2	144
Medium-voltage receptacles, plugs, and protective circuit breakers	9.6.5	145
Medium-voltage, (4,160-volt) receptacle protective circuit breakers	9.6.5.3	146
Pier low-voltage (480-volt) electrical outlet assemblies	9.6.4.2	145
Pier medium-voltage (4,160-volt) electrical outlet assemblies	9.6.5.2	146
Power cable-in-use insulation resistance values	9.6.3	144
Ship criteria for 450-volt service cable	9.6.3.2	144
Shipboard connection	9.6.4.1	144
Shipboard connections	9.6.5.1	145
Shore criteria for cable assemblies	9.6.3.1	144
Protection against hazards	4.4	11
General body protection	4.4.1	11

	PARAGRAPH	PAGE
Live-line tools	4.4.2.3	14
Other safety requirements	4.4.2.4	15
Plastic guard equipment	4.4.2.2	14
Rubber protective equipment	4.4.2.1	14
Safety equipment and tools	4.4.2	14
Relation of ship's electrical service components	9.3	134
Electrical circuit arrangement	9.3.2	134
Equipment physical relationship	9.3.1	134
General electrical system safety	9.3.2.1	134
Specific shore-to-ship electrical system safety	9.3.2.2	135
Safety	4.1	7
Application	4.1.4	7
Checklist for safety	6.3	53
Communication channel availability	6.3.1	53
Equipment preparation	6.3.5	53
Lighting level	6.3.2	53
Personnel requirements	6.3.4	53
Working period	6.3.3	53
Construction	4.1.2	7
General safety observances	4.5	15
Power transformer and regulator safety	6.9	60
Power transformers	6.9.1	60
Voltage regulators	6.9.2	61
Qualifying personnel	4.1.3	7
Switching safety	6.5	54
Air switches	6.5.1	54
Airbreak switches	6.5.1.2	55
Disconnect switches	6.5.1.1	54
Inching	6.5.1.4	55
Interrupter switches	6.5.1.3	55
Unique requirements	4.1.5	7
Use	4.1.1	7
Requirements for safely phasing or connecting of circuits	6.13	65
Storage battery safety	6.12	64
Testing safety	6.4	53
Worker/crew responsibilities	4.6	15
Knowing what to do	4.6.3.1	16
Levels of responsibility	4.6.1	15
Mishap handling	4.6.3	16
Qualifications	4.6.2	15

	PARAGRAPH	PAGE
Qualified workers	4.6.2.1	15
Rescue operations	4.6.3.3	18
Unqualified workers	4.6.2.2	15
Work injuries and mishap reports	4.6.3.2	18
Streetlighting	7.11	96
Climbing space	7.11.4	97
Multiple streetlighting circuits	7.11.2	96
Series streetlighting circuits	7.11.3	96
Streetlighting precautions	7.11.1	96
Time switches	7.11.5	97
Stringing or removing de-energized conductors	7.10	90
Adjacent to energized lines	7.10.1.1	90
Clipping in or tieing primary line wires	7.10.5.2	93
Common neutral systems	7.10.3.2	92
Conductor grounding	7.10.4.3	92
Conductors	7.10.4.2	92
De-energized line grounding	7.10.3	91
Fallen wires	7.10.2.1	91
Fire	7.10.2.2	91
Guy installation	7.10.8.1	95
Guying	7.10.8	95
Handling and stringing guidance	7.10.4	92
Insulators	7.10.9	96
Line work precautions	7.10.1	90
Other work precautions affecting aerial lines	7.10.2	91
Over, under, or across energized lines	7.10.1.2	91
Permanent ground wires	7.10.3.1	91
Primary line installation	7.10.5	92
Protecting secondary lines	7.10.6.2	94
Protective grounding equipment	7.10.3.3	92
Reels	7.10.4.1	92
Removal of guys	7.10.8.2	96
Removing lines	7.10.7	94
Secondary line installation	7.10.6	93
Stringing primary line wires	7.10.5.1	93
Stringing secondary line wires	7.10.6.1	94
Vehicular protection	7.10.2.3	91
Substation work area control	6.2	50
Adjacent energized equipment protection	6.2.3.6	52

	PARAGRAPH	PAGE
Barriers and barricade tape	6.2.3.3	51
Clearance access	6.2.2	51
De-energizing proof testing	6.2.3.4	51
De-energizing work areas	6.2.3	51
Installation precautions	6.2.5	53
Lockout/tagout/tryout	6.2.3.2	51
Previsit briefing	6.2.1	50
Switching	6.2.3.1	51
Work area grounding	6.2.3.5	52
Worker protection	6.2.3.7	52
Working area housekeeping checks	6.2.4	52
Supporting shore-to-ship safety requirements	9.5	139
Connect/disconnect performance responsibilities	9.1	127
Emergency procedures	9.5.2.5	143
Normal procedures	9.5.2.4	143
Priorities	9.5.2.3	140
SOP preparation responsibility	9.5.2.1	139
Specialized shore-to-ship system training	9.5.1	139
Specific organization requirements	9.5.2.2	140
Specific SOP's	9.5.2	139
Ship connection procedures before ship docks	9.7	146
Checking shore receptacles	9.7.2	149
Inserting cable plugs into receptacles	9.7.2.1	150
Inspecting and testing power cable assemblies	9.7.1.3	148
Laying power cable assemblies	9.7.1.1	147
Laying, inspecting, and testing power cable assemblies	9.7.1	146
Moving power cable assemblies on pier	9.7.1.2	147
Ship’s main electrical service components	9.2	127
Pier substations	9.2.2	128
Ship-to-shore pier electrical outlet assemblies	9.2.3	128
Ship-to-shore power cables and connectors	9.2.4	128
Shore medium-voltage distribution system	9.2.1	128
Ship’s transfer back to the ship’s generator	9.10	151
Ship’s transfer to shore power	9.9	151
Shores disconnection of cable plugs and removal of cable assemblies	9.11	152
Shore-to-ship power cable rigging after ship docks	9.8	151
System familiarity	6.1	49
Abnormal conditions	6.1.4	50
Alarms	6.1.3.2	49

	PARAGRAPH	PAGE
Defective equipment	6.1.5	50
Diagrams and schematics	6.1.1	49
Engineering guidance	6.1.2	49
Interlocking	6.1.3.3	49
Protective devices	6.1.3.1	49
System operation	6.1.3	49
Training	4.8	19
Programs	4.8.1	20
Standard operating procedures/job hazard analysis	4.8.2	22
Tree trimming and brush removal	7.13	100
Chain saws	7.13.6.2	103
Climbing and working on trees	7.13.5	101
Operating power trimming equipment	7.13.6.1	102
Power trimming equipment	7.13.6	102
Right-of-way brush removal	7.13.6.3	103
Tree climbers	7.13.5.1	101
Tree trimming public safety	7.13.2	100
Tree trimming tool safety	7.13.3	100
Tree trimming training qualifications	7.13.1	100
Tree work	7.13.5.2	101
Working on trees near energized lines	7.13.4	101
Underground work	8.1	105
Excavation practices and procedures for damage control	8.4	111
Accountability for excavator error	8.4.8	114
All projects preplanning	8.4.2	111
Backfilling in areas of utility locations	8.4.6	113
Excavating in areas of utility locations	8.4.5	112
If damage does occur to existing utilities	8.4.7	113
Large project preplanning	8.4.3	111
On the job site procedures	8.4.4	111
Preplanning of the excavation project	8.4.1	111
Existing obstruction protection	8.3	109
Digging restriction	8.3	109
Direct-burial electrical cable work	8.3.2	109
Handling damage to existing utility line	8.3.4	110
Locating buried facilities	8.3.1	109
Preparation for work in underground structures	8.5	114
Elimination of combustible or toxic gases	8.5.2.3	118
Emergency entrance into underground structures	8.5.2.5	119
Forced air	8.5.3.1	119

	PARAGRAPH	PAGE
Hazardous conditions in underground structures	8.5.2.1	117
Natural method	8.5.3.3	119
Removing a manhole cover	8.5.1	114
Sail method	8.5.3.2	119
Structure condition change retesting requirements	8.5.2.4	118
Testers for underground structures	8.5.2.2	117
Testing before entering underground structures	8.5.2	116
Ventilation of underground structures	8.5.3	119
Underground work area protection	8.2	105
Barricades and warning precautions	8.2.4	105
Barriers and barricade tape	8.2.4.3	106
Cable pulling protection	8.2.4.7	109
Caution and danger signs	8.2.4.4	107
Devices	8.2.4.1	106
Excavation, trenching, and backfilling	8.2.4.6	107
Flagmen	8.2.4.2	106
Impact of vehicular traffic flow	8.2.2	105
Manhole work areas	8.2.4.5	107
Underground work area protection methods	8.2.1	105
Work space considerations	8.2.3	105
Work inside underground structures	8.6	120
Cutting of underground cables	8.6.5	124
De-energizing underground cables and equipment	8.6.3	122
General inside structure safety	8.6.1	120
Grounding switch operation	8.6.4.4	123
Isolation of underground lines	8.6.3.1	122
Precautions before de-energizing underground lines	8.6.2	121
Protection against energized parts	8.6.4.2	122
Requirements for working on underground cables and apparatus	8.6.4	122
Underground cable and equipment grounding	8.6.3.2	122
Underground de-energized work	8.6.4.1	122
Underground working procedures	8.6.4.3	123

CUSTODIAN
NAVY – YD2

PREPARING ACTIVITY
NAVY – YD2

PROJECT NO.
FACR-5001

STANDARDIZATION DOCUMENT IMPROVEMENT PROPOSAL

INSTRUCTIONS

1. The preparing activity must complete blocks 1, 2, 3, and 8. In block 1, both the document number and revision letter should be given.

2. The submitter of this form must complete blocks 4, 5, 6, and 7.

3. The preparing activity must provide a reply within 30 days from receipt of the form.

NOTE: This form may not be used to request copies of documents, nor to request waivers, or clarification of requirements on current contracts. Comments submitted on this form do not constitute or imply authorization to waive any portion of the referenced document(s) or to amend contractual requirements.

I RECOMMEND A CHANGE:	1. DOCUMENT NUMBER MIL-HDBK-1025/10	2. DOCUMENT DATE *(YYMMDD)* *981201*

3. DOCUMENT TITLE : Safety of Electrical Transmission and Distribution Systems

4. NATURE OF CHANGE *(identify paragraph number and include proposed rewrite, if possible. Attach extra sheets as needed.)*

5. REASON FOR RECOMMENDATION

6. SUBMITTER

a. NAME *(Last, First, Middle Initial)*	b. ORGANIZATION	
c. ADDRESS *(Include Zip Code)*	d. TELEPHONE *(Include Area Code)* (1) Commercial (2) DSN *(If applicable)*	7. DATE SUBMITTED: *(YYMMDD)*

8. PREPARING ACTIVITY

a. NAME COMMANDER NAVAL FACILITIES ENGINEERING COMMAND ATTN CRITERIA OFFICE	b. TELEPHONE (*Include Area Code*) (1) Commercial: (757) 322-4208 (2) DSN: 262-4208
c. ADDRESS *(Include Zip Code)* 1510 GILBERT STREET NORFOLK, VA 23511-2699	**IF YOU DO NOT RECEIVE A REPLY WITHIN 45 DAYS, CONTACT:** Defense Quality and Standardization Office 5203 Leesburg Pike, Suite 1403, Falls Church, VA 22041-3466 Telephone (703) 756-2340 DSN 289-2340