```
+)))))))))))))))))))))))))))))))))))))))))))))))))))))))))))))))))))))))),
* CCB Application Notes:                                                 *
*                                                                        *
* 1. Character(s) preceded & followed by these symbols (. -) or (+ ,)  *
*    are super- or subscripted, respectively.                            *
*    EXAMPLES:  42m.3-  =  42 cubic meters                               *
*               CO+2,   =  carbon dioxide                                *
*                                                                        *
* 2. All degree symbols have been replaced with the word deg.            *
*                                                                        *
* 3. All plus or minus symbols have been replaced with the symbol +/-. *
*                                                                        *
* 4. All table note letters and numbers have been enclosed in square   *
*    brackets in both the table and below the table.                     *
*                                                                        *
* 5. Whenever possible, mathematical symbols have been replaced with   *
*    their proper name and enclosed in square brackets.                  *
.)))))))))))))))))))))))))))))))))))))))))))))))))))))))))))))))))))))))-
```

MIL-HDBK-1025/4
30 SEPTEMBER 1988
Superseding
DM-25.4
JULY 1981

MILITARY HANDBOOK

SEAWALLS, BULKHEADS, AND QUAYWALLS

AMSC N/A

DISTRIBUTION STATEMENT A. APPROVED FOR PUBLIC RELEASE: DISTRIBUTION IS UNLIMITED

AREA FACR

ABSTRACT

Basic criteria for the design of seawalls, bulkheads, and quaywalls is presented for use by experienced engineers. The contents cover general topics including selection factors, as well as detailed design considerations for various types of seawalls, bulkheads, and quaywalls. A discussion of special considerations is included.

PAGE iii INTENTIONALLY BLANK

FOREWORD

This handbook has been developed from an evaluation of facilities in the shore establishment, from surveys of the availability of new materials and construction methods, and from selection of the best design practices of the Naval Facilities Engineering Command (NAVFACENGCOM), other Government agencies, and the private sector. This handbook was prepared using, to the maximum extent feasible, national professional society, association, and institute standards. Deviations from this criteria, in the planning, engineering, design, and construction of Naval shore facilities, cannot be made without prior approval of NAVFACENGCOM Headquarters (Code 04).

Design cannot remain static any more than can the functions it serves or the technologies it uses. Accordingly, recommendations for improvement are encouraged and should be furnished to Commander, Atlantic Division, Naval Facilities Engineering Command, Code 04A4, Norfolk, Virginia 23511-6287; phone commercial (804) 444-9970.

THIS HANDBOOK SHALL NOT BE USED AS A REFERENCE DOCUMENT FOR PROCUREMENT OF FACILITIES CONSTRUCTION. IT IS TO BE USED IN THE PURCHASE OF FACILITIES ENGINEERING STUDIES AND DESIGN (FINAL PLANS, SPECIFICATIONS, AND COST ESTIMATES). DO NOT REFERENCE IT IN MILITARY OR FEDERAL SPECIFICATIONS OR OTHER PROCUREMENT DOCUMENTS.

WATERFRONT CRITERIA MANUALS

Criteria Manual	Title	PA
MIL-HDBK-1025/1	Piers and Wharves	LANTDIV
MIL-HDBK-1025/2	Dockside Utilities for Ship Service	LANTDIV
MIL-HDBK-1025/3	Cargo Handling Facilities	LANTDIV
MIL-HDBK-1025/4	Seawalls, Bulkheads, and Quaywalls	LANTDIV
MIL-HDBK-1025/5	Ferry Terminals and Small Craft Berthing Facilities	LANTDIV
MIL-HDBK-1025/6	General Criteria for Waterfront Construction	LANTDIV

NOTE: Design manuals, when revised, will be converted to military handbooks.

This handbook is issued to provide immediate guidance to the user. However, it may or may not conform to format requirements of MIL-HDBK-1006/3 and will be corrected on the next update.

SEAWALLS, BULKHEADS, AND QUAYWALLS

CONTENTS

			Page
SECTION	1	INTRODUCTION	
	1.1	Scope	1
	1.2	Cancellation	1
SECTION	2	PROTECTIVE WATERFRONT STRUCTURES	
	2.1	Definitions	2
	2.1.1	Seawall	2
	2.1.2	Bulkhead	2
	2.1.3	Quaywall	2
	2.2	Selection of Type of Facility	2
	2.2.1	Bulkheads vs. Seawalls	2
	2.2.2	Bulkheads vs. Quaywalls	3
SECTION	3	SEAWALLS	
	3.1	Types of Construction	4
	3.2	Selection Factors	4
	3.2.1	Exposure	4
	3.2.2	Foundation Condition	4
	3.2.3	Beach Scour	4
	3.2.4	Overtopping	4
	3.3	General Design	10
	3.3.1	Forces to be Considered	10
	3.3.2	Wave Pressures and Suctions	10
	3.3.2.1	Height and Period of Incident Waves	10
	3.3.2.2	Critical Depth for Breaking of Incident Waves	10
	3.3.2.3	Pressure Due to Breaking, Broken, and Nonbreaking Waves	10
	3.3.2.4	Maximum Forces and Moments	10
	3.3.3	Tidal Lag	10
	3.3.4	Allowable Stresses	11
	3.4	Design Details	11
	3.4.1	Scour	11
	3.4.1.1	Width of Toe Armor	11
	3.4.1.2	Depth to Toe Wall	11
	3.4.2	Overtopping	11
	3.4.3	Joints	14
	3.4.4	Compartmentation	14
	3.4.5	Drainage	14
	3.4.6	Inundation of the Backfill	14
	3.4.7	Passive Resistance of Soil	14
	3.4.8	Inclined Face Designs	15
	3.4.9	Elevation of Top of Wall	14
	3.4.9.1	Inclined Face Designs	14
	3.4.9.2	Vertical or Curved Face Designs	15

Page

SECTION 4 BULKHEADS
4.1 Types of Construction 16
4.2 Selection Factors - Type of Construction. 16
4.2.1 Cantilever Wall 16
4.2.2 Anchored Wall With Single Level of Anchorage. 16
4.2.3 Relieving Platform 16
4.2.4 Batter Piles in Lieu of Anchor System 16
4.2.5 Hard Bottom 28
4.2.6 Soft Bottom 28
4.3 Special Measures 28
4.3.1 Use of Lightweight Material 28
4.3.2 Multiple Levels of Anchors 28
4.3.3 Use of Non-Domestic or Built-up Sections 28
4.3.4 High-Strength Sheet Piling 28
4.3.5 Modification of Characteristics of Soil Behind Wall. 28
4.3.6 Fixation of Tops of Sheet Piling 35
4.3.7 Methods to Reduce Wave Action 35
4.4 Types of Front Wall 35
4.5 Selection Factors - Types of Front Wall 35
4.5.1 Sheet Piling 35
4.5.2 Soldier Pile Wall 35
4.5.3 Soldier Beams and Lagging 35
4.5.4 Close-Pile Wall 42
4.5.5 Double Wall 42
4.6 Materials for Front Wall Construction 42
4.6.1 Aluminum 42
4.6.2 General 42
4.7 Types of Anchorage 42
4.8 Selection Factors - Types of Anchorage 42
4.9 Allowable Stresses 42
4.9.1 Front Wall Materials 42
4.9.2 Tie Rods, Fittings, Connections, and Anchor Wall . . 42
4.9.3 Deck Framing 46
4.9.4 Vertical Load on on Sheet Piling 46
4.9.5 Construction Conditions 46
4.10 Applicable Method of Design 46
4.10.1 Toe of Wall Embedded in Soft to Medium Fine Grained Soil. 46
4.10.2 Toe of Wall Embedded in Loose Sand - Sand Behind Wall 46
4.10.3 Toe of Wall Embedded in Medium to Compact Coarse Grained Soil 46
4.10.4 Toe of Wall Embedded in Stiff, Nonsensitive Fine Grained Soil 49
4.11 Detailed Design Considerations. 49
4.11.1 Deadmen and Sheet Pile Anchors. 49

Page

	4.11.2	Pile Supported Anchors	49
	4.11.3	Wales	49
	4.11.4	Tie Rods	49
	4.11.5	Protection Against Impact of Berthing Vessels	50
	4.11.6	Wall Movements	50
	4.11.7	Scour at Toe	50
	4.11.8	Future Dredging	50
	4.11.9	Drainage of Backfill	50
	4.12	Construction Procedures	50
	4.13	Appurtenances	51
SECTION	5	QUAYWALLS	
	5.1	Types of Construction	52
	5.2	Selection Factors	52
	5.2.1	Water Depth	52
	5.2.2	Maintenance	52
	5.2.3	General	52
	5.2.4	Special Considerations Relative to Filled, Cellular Construction.	52
	5.2.4.1	Cohesive Soils.	52
	5.2.4.2	Hard or Boundary Soils	52
	5.3	Detailed Design	52
	5.3.1	General Requirements.	52
	5.3.2	Structural Design Criteria	52
	5.3.3	Filled, Cellular Construction	66
	5.4	Appurtenances	66

FIGURES

1	Types of Seawalls (Examples A thru C)	5
2	Types of Seawalls (Examples D thru F)	6
3	Types of Seawalls (Examples G thru I)	7
4	Seawalls - Details to Accommodate Movement (Example A).	8
5	Seawalls - Details to Accommodate Movement (Example B).	9
6	Effect of Tidal Lag	12
7	Sample Computation - Estimating Magnitude of Tidal Lag on Bulkhead Wall.	13
8	Types of Bulkheads (Example A)	17
9	Types of Bulkheads (Examples B thru D).	18
10	Types of Bulkheads (Example E).	19
11	Bulkheads - Actual Constructions (Examples A thru D).	20
12	Bulkheads - Actual Constructions (Examples E thru G).	21
13	Bulkheads - Actual Constructions (Examples H and I)	22
14	Bulkheads - Actual Constructions (Examples J and K)	23
15	Bulkheads - Actual Constructions (Examples L and M)	24
16	Anchored Wall With Single Level of Anchorage	25
17	Relieving Platform	26
18	Reduction in Pressure on Closure Wall Due to Wall Friction (Examples A and B)	27

Page

19 Construction in Soft Material (Examples A thru D) 29
20 Use of Lightweight Material (Example A) 30
21 Use of Lightweight Material (Example B) 31
22 Special Types of Bulkhead Sheeting (Examples A thru C) 32
23 Special Types of Bulkhead Sheeting (Examples D and E) 33
24 Sand Dike and Sand Blanket 34
25 Sheet Piling With Fixed Ends 36
26 Methods of Reducing Wave Action on Bulkhead 37
27 Types of Front Wall (Examples A thru C) 38
28 Types of Front Wall (Examples D thru F) 39
29 Silo Walls 40
30 Types of Anchorage (Examples A thru D) 43
31 Types of Anchorage (Details 1 thru 3) 44
32 Types of Anchorage (Detail 4) 45
33 Deflection Curve for Bulkhead Sheeting 47
34 Penetration in Stiff, Nonsensitive Fine-Grained Soil 48
35 Types of Quaywalls (Examples A thru C) 53
36 Types of Quaywalls (Example D) 54
37 Types of Quaywalls (Examples E and F) 55
38 Types of Quaywalls (Examples G and H) 56
39 Quaywalls - Actual Constructions (Examples A thru 57
40 Quaywalls - Actual Constructions (Example 58
41 Quaywalls - Actual Constructions (Example 59
42 Quaywalls - Actual Constructions (Examples F thru 60
43 Quaywalls - Actual Constructions (Examples J and 61
44 Quaywalls - Actual Constructions (Examples L and 62
45 Quaywalls - Actual Constructions (Example 63
46 Quaywalls - Actual Constructions (Example 64
47 Quaywalls - Actual Constructions (Example 65
48 Filled Cellular 67

TABLES

1 Recommended Thicknesses of Wood Lagging 41

REFERENCES 68

GLOSSARY..... 69

Section 1: INTRODUCTION

1.1 Scope. This military handbook contains general criteria for the design of seawalls, bulkheads, and quaywalls, with emphasis on type, construction, and material selections.

1.2 Cancellation. This handbook, MIL-HDBK-1025/4, Seawalls, Bulkheads, and Quaywalls, supersedes NAVFAC DM-25.4, dated July 1981.

Section 2: PROTECTIVE WATERFRONT STRUCTURES

2.1 Definitions

2.1.1 Seawall. A seawall is a soil retaining or armoring structure whose purpose is to defend a shoreline against wave attack. It differs from a breakwater in its capacity as a soil retention structure. Seawalls are forms of shore protection and are not intended for use as berthing facilities (refer to NAVFAC DM-26.2, Coastal Protection).

2.1.2 Bulkhead. A bulkhead is a soil retaining wall structure comprised of vertically-spanning sheet piles or other flexural members. Bulkheads derive their stability through mobilization of passive earth pressures between the mudline and embedded tip, and, in most cases, from a lateral restraint system installed between Mean Low Water (MLW) and top of the wall top. Bulkheads are installed to establish and maintain elevated grades along shorelines in relatively sheltered areas not subject to appreciable wave attack, and are commonly used as berthing facilities.

2.1.3 Quaywall. A quaywall is a gravity wall structure having the dual function of providing shore protection against light to moderate wave attack and a berthing face for ships. Its function is similar to a bulkhead but should be chosen when overall height requirements or wave environment severity exceed the practical capabilities of typical bulkhead constructions. Quaywalls differ from bulkheads and wall-type seawalls in that they do not necessarily retain a soil backfill.

2.2 Selection of Type of Facility. The boundaries of functional application between basic structure types are not well defined. Within the general definitions of each, there exists a wide variety of construction types and techniques, resulting in considerable overlap in wave resistance capacity and applicability. In general, selection among the basic forms for a particular application depends upon the severity of the wave environment, the physical requirements of the berth of the ship, if applicable, and the relative construction costs associated with each in the geographic area under construction.

2.2.1 Bulkheads vs. Seawalls. The terms "bulkhead" and "seawall" are frequently and inappropriately interchanged, and bulkheads are sometimes installed to serve as seawalls. The forces imposed by breaking or broken waves can be considerable and can prove to be irresistible to the flexible, multi-jointed sheet element construction inherent to bulkheads.

Seawalls are required along exposed shorelines subject to attack by wave spectra defined by significant wave heights of 5 ft (1.52 m) or more. For shorelines exposed to lesser degrees of wave action, the decision between seawall and bulkhead construction will be based upon economics and land-use considerations. Where maximization of waterfront real estate is required, the vertical-wall construction of bulkheads is preferable. The finished grade elevation of the retained backfill can be established at or above the extreme high water line, and maintained immediately up to the shoreline. Where development of the waterfront is not anticipated and the lateral extent required by revetment or rubble-mound types of seawalls is acceptable, these typed should be considered.

2.2.2 Bulkheads vs. Quaywalls. If a harbor is properly sited, protected, and designed, the contained berthing facilities will not be exposed to excessive wave action. Modern bulkhead construction techniques have extended their applicability into areas that, in the past, required quaywall installation. As such, bulkheads have virtually eliminated the necessity for quaywalls in most harbors. However, there remain situations for which bulkheads are inappropriate. The maximum wall height that can be realistically accommodated by bulkhead construction is approximately 40 ft (12.1 m). Therefore, whenever the combination of dredge depth and backfill freeboard approaches or exceeds this general limitation, quaywall construction should be considered. Also, not all harbors are sited or protected adequately to preclude the possibility of moderate to severe wave attack. At these sites, quaywalls remain the most viable solution wheve a combination of berthing and shore protection is required.

Section 3: SEAWALLS

3.1 Types of Construction. (See Figures 1, 2, and 3.)

3.2 Selection Factors

3.2.1 Exposure. If location is subject to heavy wave attack (6 feet or greater significant wave height before breaking), select vertical wall, curved face, or rubble mound types. For locations subject to moderate wave attack (3 to 6 ft [.91 to 1.83 m]) significant wave height before breaking), use any type of seawall. For locations subject to light wave attack (4 ft [1.22 m] or less significant wave height before breaking), use any type of seawall or use a bulkhead.

3.2.2 Foundation Condition. For fair to good foundation conditions, any type of seawall is applicable provided that provision is made to prevent undermining due to scour. For poor foundation conditions, flexible types are applicable such as revetments and rubble mounds which can accommodate substantial settlement, pile supported designs such as stepped-face walls which are independent of settlement and soil strength, and lightweight, sloped constructions which minimize shear stress in the supporting soil. Where hard bottom (rock, hardpan) is located at reasonable depth, gravity structures, including curved face walls, should be considered. Seawalls supported on piles may be detailed to accommodate lateral movement as shown in Figures 4 and 5.

3.2.3 Beach Scour. Since a seawall is often located between the extreme high and extreme low tide marks or in shallow water, it is subject to scour from breaking waves. In deeper water, reflection from a vertical face wall may be expected to cause scour at the foot of the wall. Prevention of scour from breaking waves requires use of a toe blanket or a cutoff wall, which lets the scour occur but prevents undermining. The scoured volume normally fills again after the storm, but if scour, albeit temporary, is to be permitted, check stability of the wall under condition of maximum scour. The prevention of scour due to wave reflection (which implies water of sufficient depth at the face of the wall to prevent breaking of waves) can be facilitated by the use of rubble mound or stepped-face designs. For guidance in estimating depth of scour, refer to para. 3.4.1.

3.2.4 Overtopping. Vertical face and curved (concave) face walls tend to throw the reflected waves into the air where an onshore wind can carry a considerable quantity of water ashore. Wave run-up on paved slopes, such as concrete block revetment, also can result in a large quantity of water overtopping the wall. Where overtopping is a serious problem, rubble mound, stepped face, and similar energy-dissipating designs with or without a parapet wall at the top of the slope, or devices such as those shown in Figure 2, should be considered. A slight nose at the top of the wall helps to return the uprushing waves. A pronounced projection should be avoided.

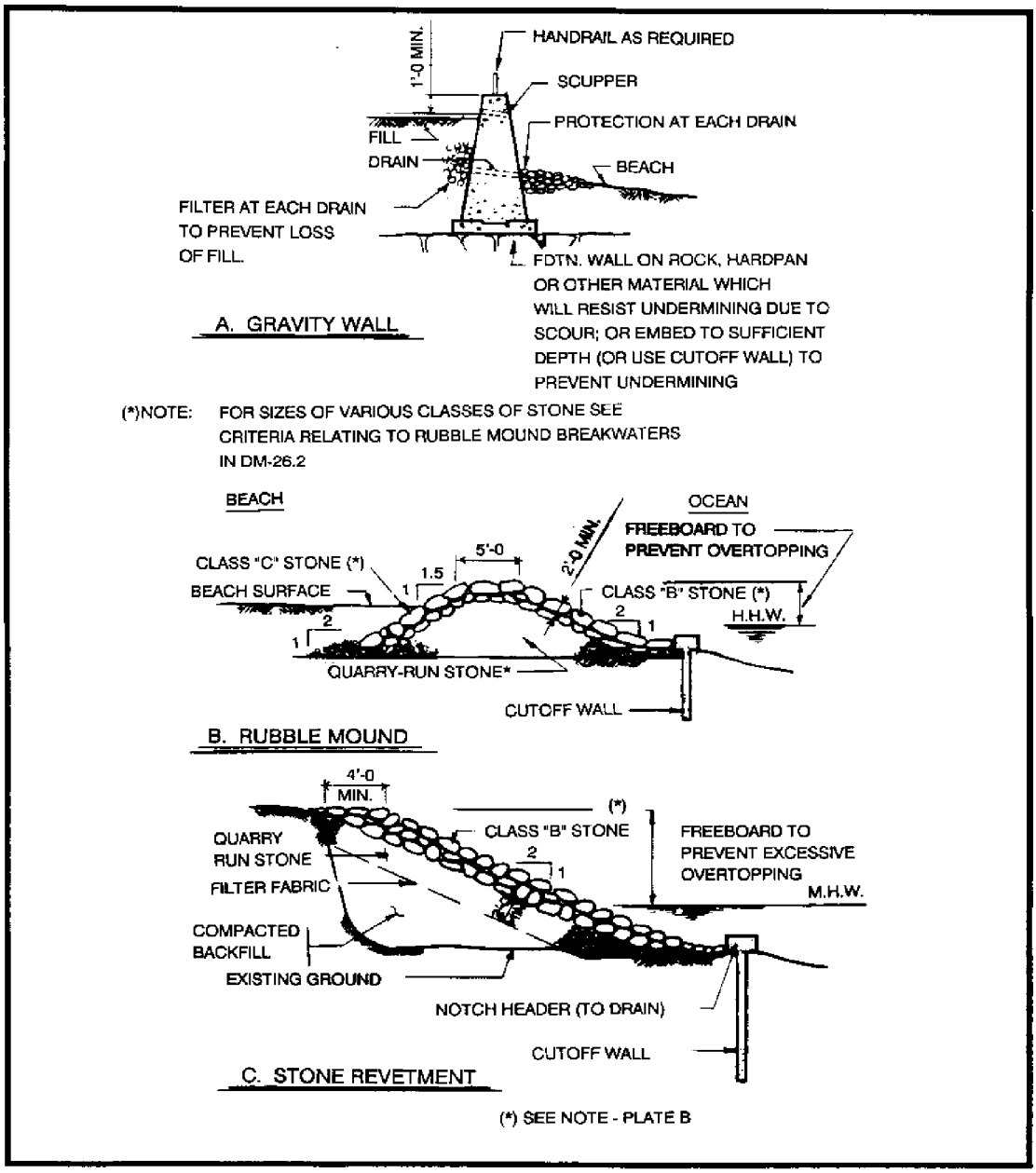

Figure 1
Types of Seawalls (Examples A thru C)

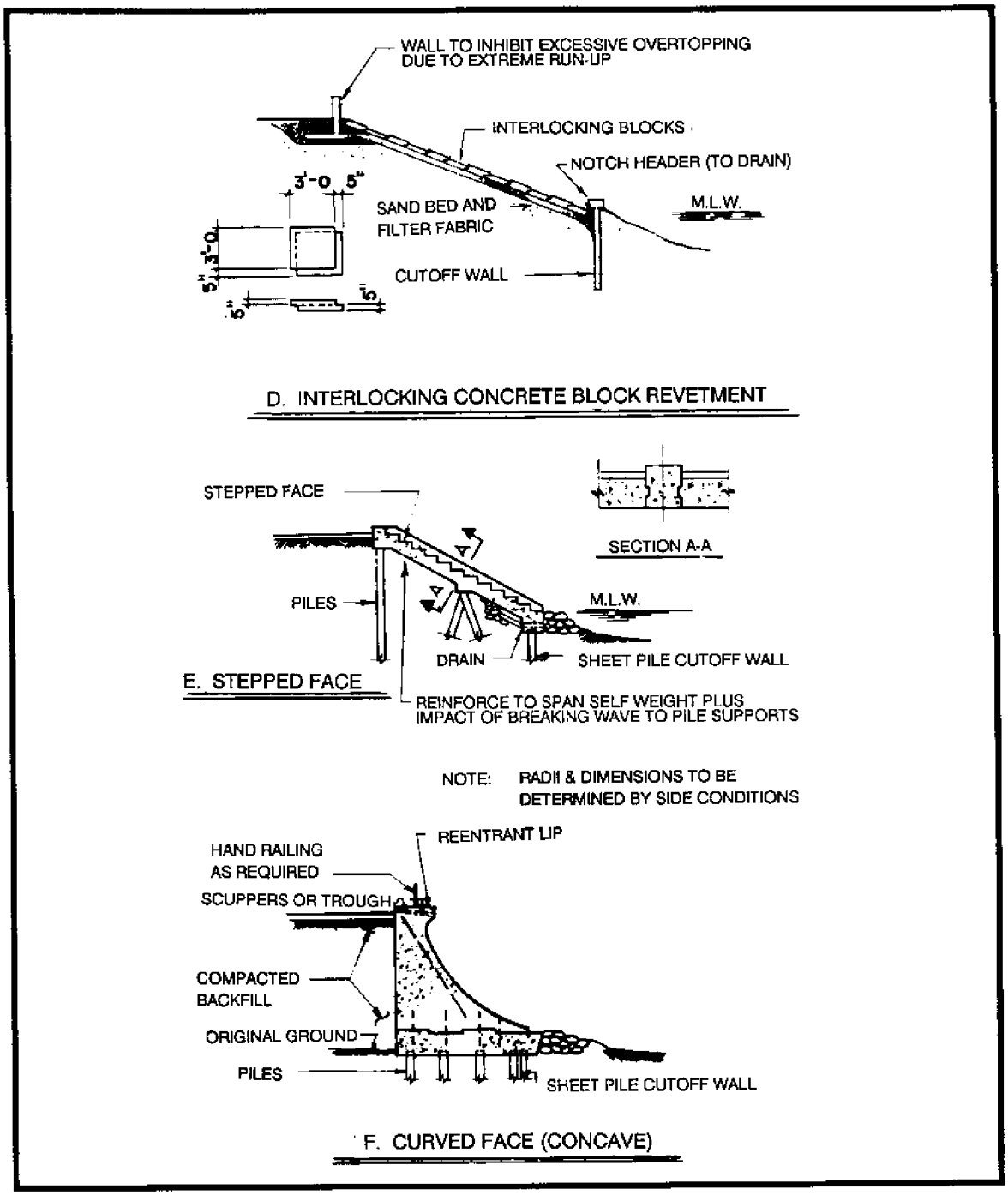

Figure 2
Types of Seawalls (Examples D thru F)

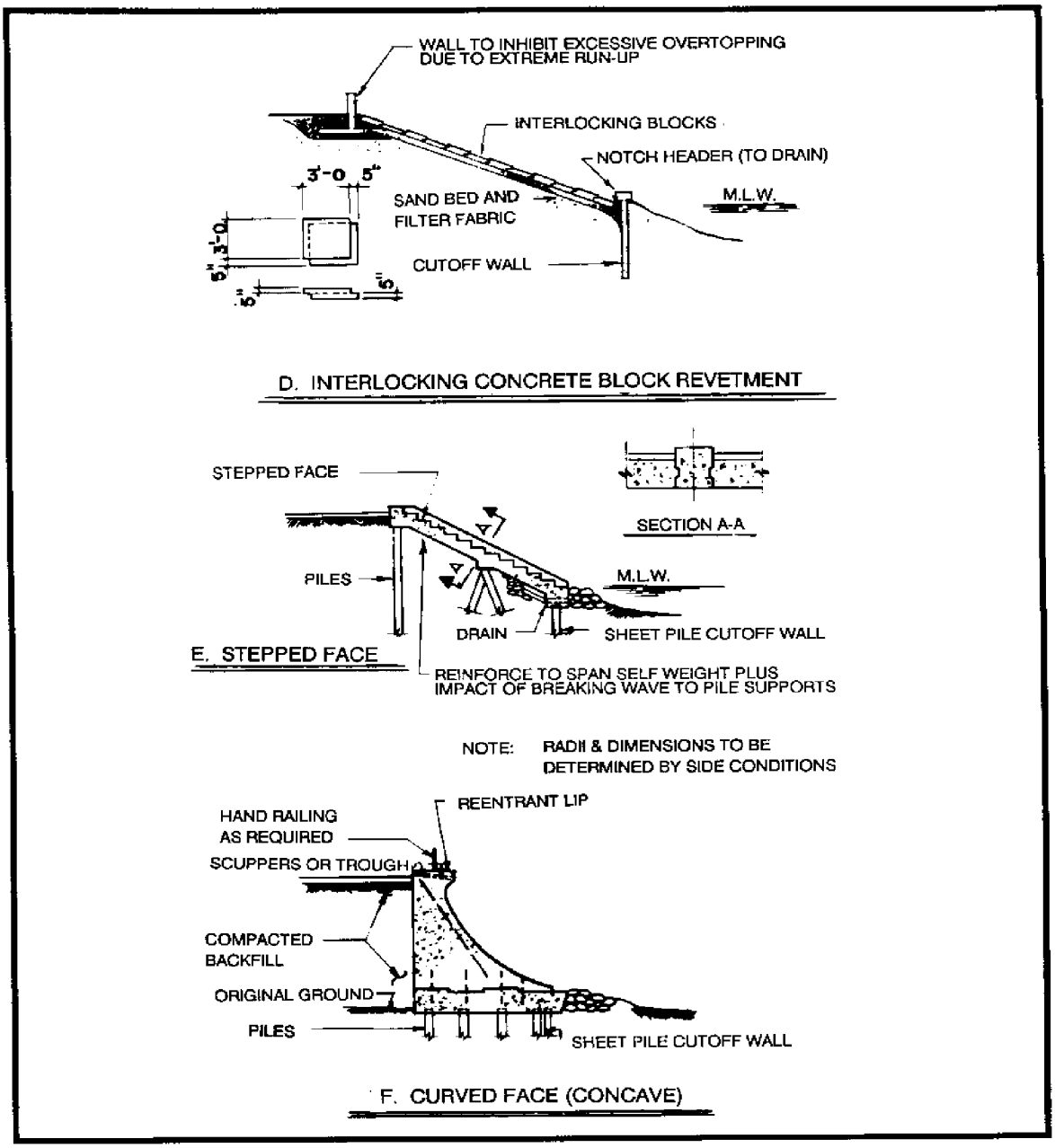

Figure 2
Types of Seawalls (Examples D thru F)

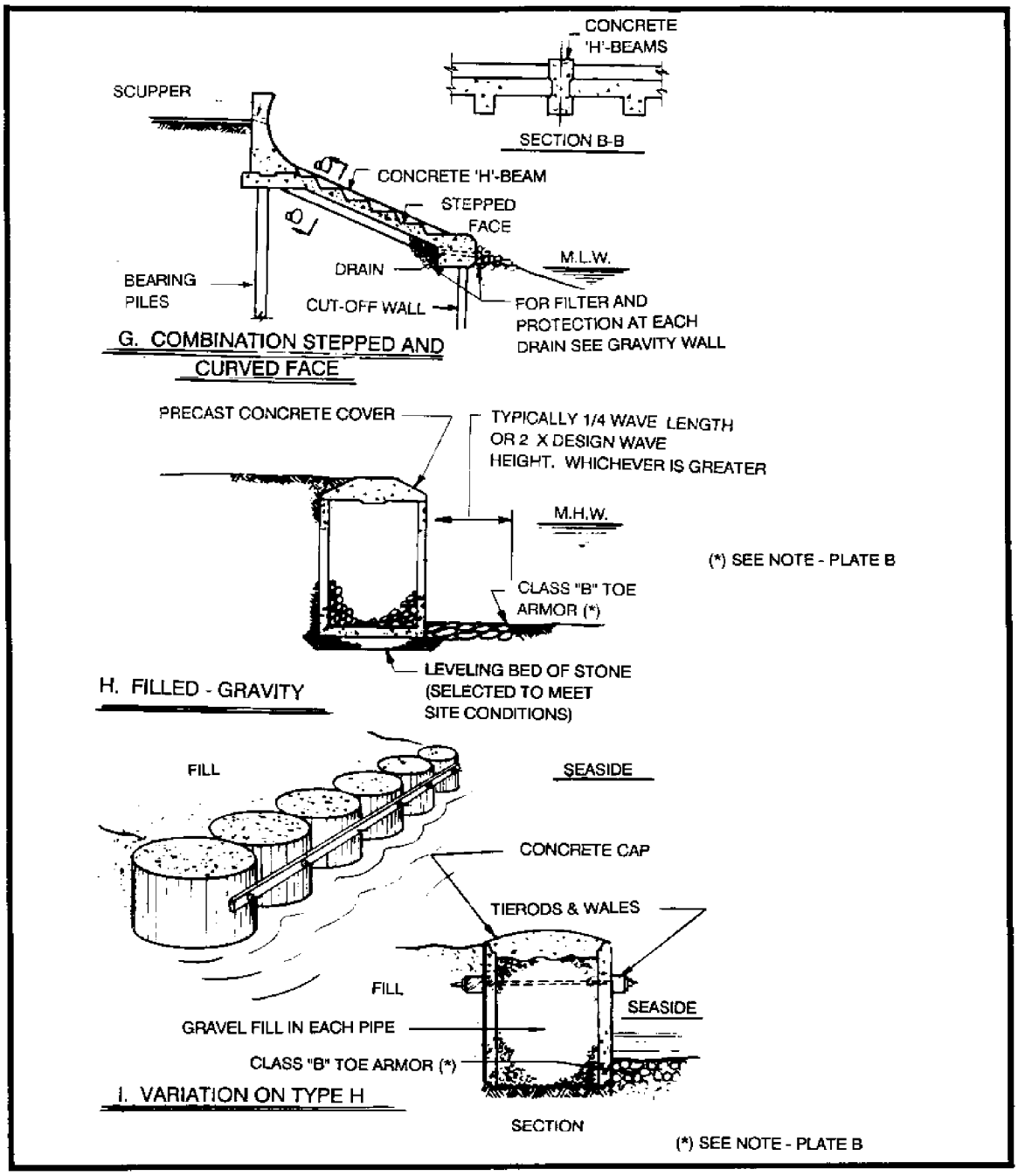

Figure 3
Types of Seawalls (Examples G thru I)

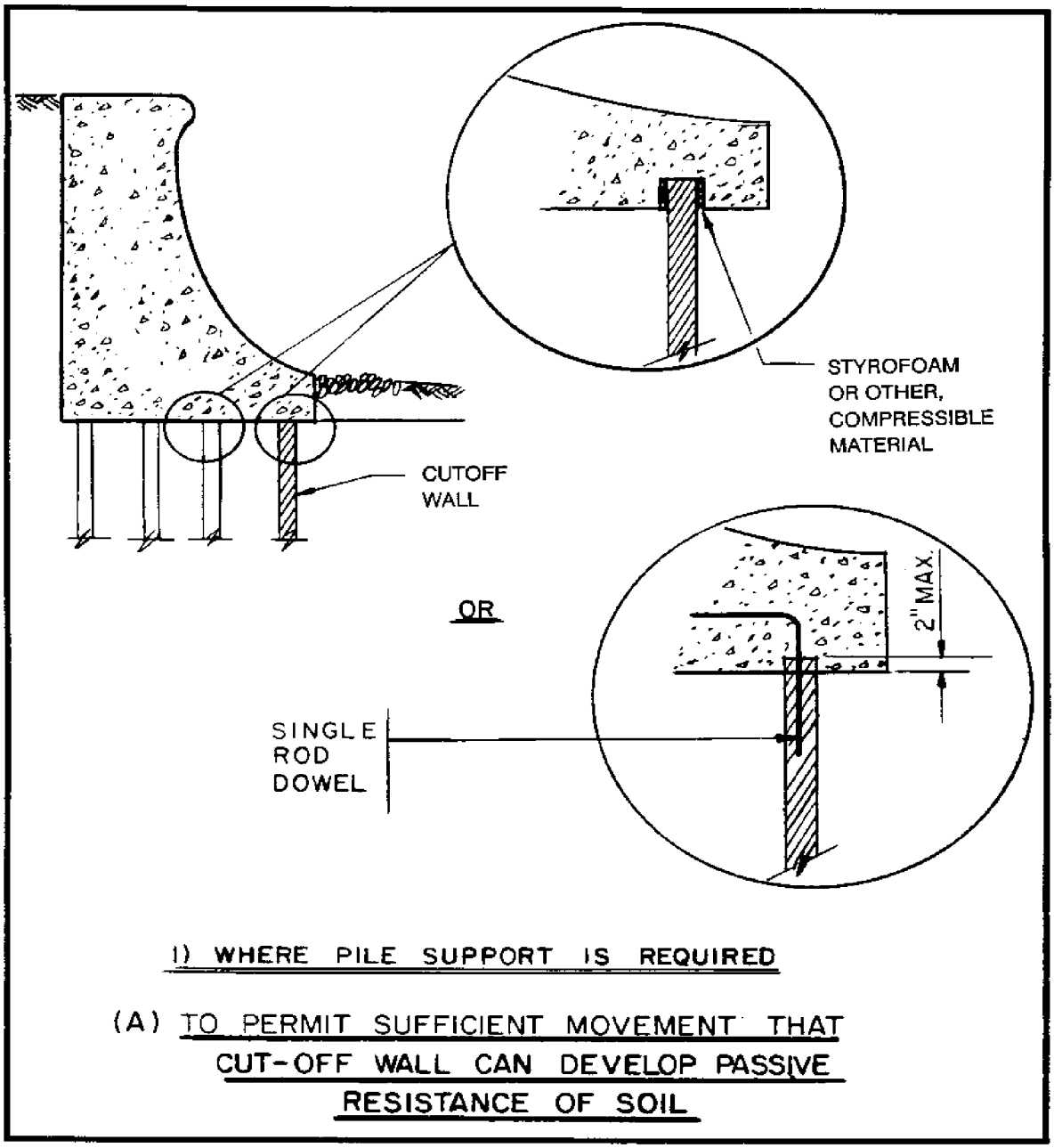

Figure 4
Seawalls - Details to Accommodate Movement (Example A)

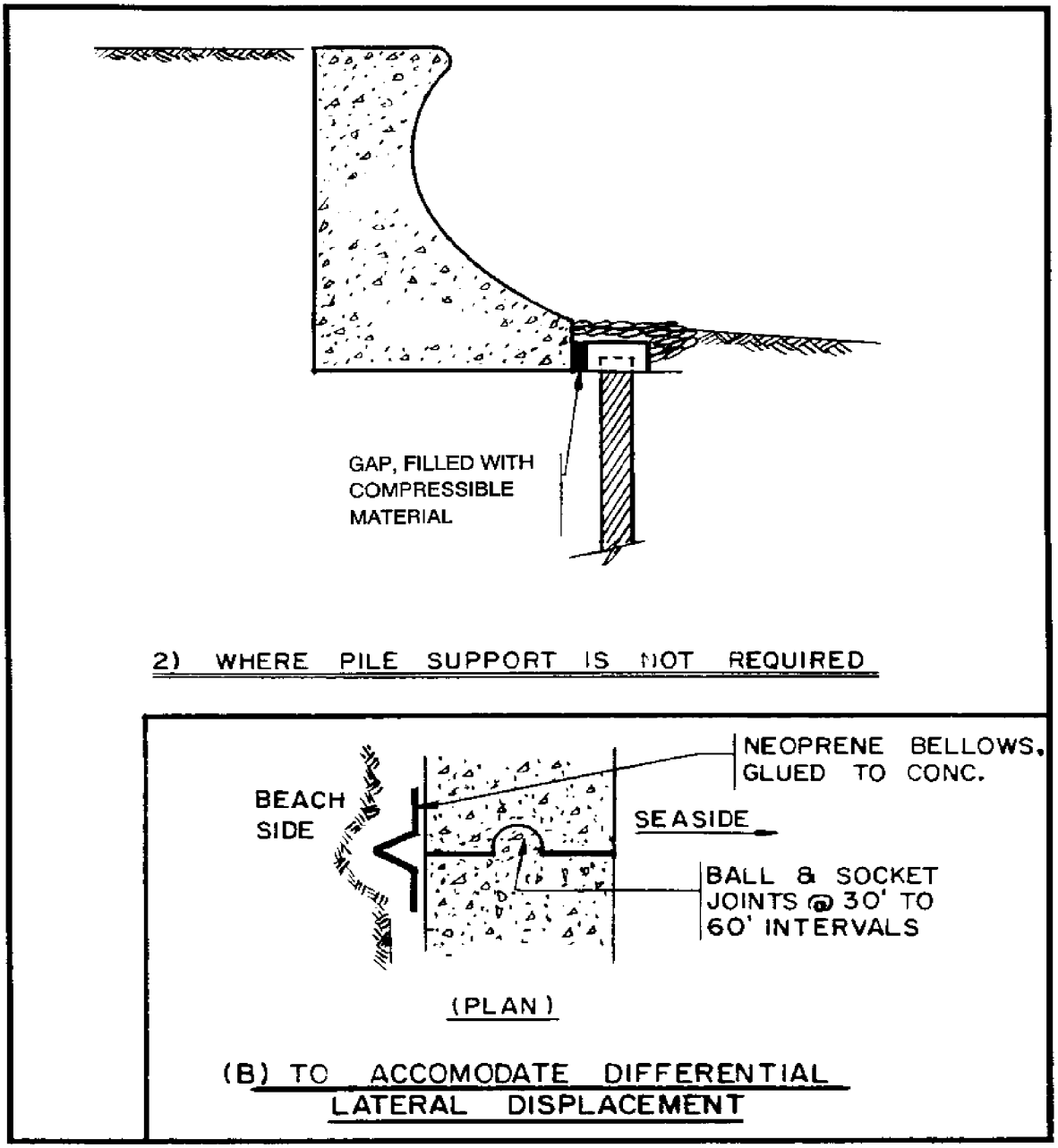

Figure 5
Seawalls - Details to Accommodate Movement (Example B)

3.3 General Design

3.3.1 Forces to be Considered

a) Self-weight, weight of fill, and applied live load, in general.

b) Lateral earth pressure (refer to DM-7.01, Soil Mechanics, and DM-7.02, Foundations and Earth Structures).

c) Wave pressures and suctions.

d) Hydrostatic pressure due to tidal lag.

e) Surcharge.

f) Buoyancy.

3.3.2 Wave Pressures and Suctions

3.3.2.1 Height and Period of Incident Waves. (Refer to procedures in DM-26.2.)

3.3.2.2 Critical Depth for Breaking of Incident Waves. (Refer to DM-26.2.) Where the critical value of the ratio db:Ho (determined from the charts) approximates the actual value db:Ho at the wall, design the wall for pressures due to "breaking" waves. Where the actual depth-height ratio is less than the critical ratio, design the wall for pressures due to a "broken" wave. Where the actual depth-height ratio is greater than the critical value, the wall will be subject only to pressures due to "nonbreaking waves."

3.3.2.3 Pressure Due to Breaking, Broken, and Nonbreaking Waves. (Refer to DM-26.2.)

3.3.2.4 Maximum Forces and Moments. Analyze several incident wave conditions (combinations of height and period) to determine the maximum forces and moments.

3.3.3 Tidal Lag. At high tide, the water level in the fill behind a bulkhead, seawall, or quaywall rises, but, because of the limited permeability of the fill, not as fast as the tide rises. Similarly, as the tide falls, the water level in the fill also falls, but not as fast. The lag in rise of the water level in the fill is of no concern as regards design of the wall. However, the lag in fall of the water level creates an unbalanced water pressure which must be resisted or accommodated by the structure. Therefore, where the wall stands seaward of the high-high water mark, design for tidal lag is as follows:

a) For permeable structures such as rubble mounds and for structures with permeable backfill (coefficient of permeability greater than one foot per minute), positive drainage of the backfill, and weep holes at or near the ground line at the front of the walls, assume zero tidal lag.

b) For structures backed by impermeable fill (coefficient of permeability of 10.-3- ft/min or less), assume tidal lag equal to one-half the mean tidal range.

c) For structures backed by fill material having a permeability between 10-3 and one ft/min:

1) If the wall is of low permeability (sheet piling and few or no weep holes), assume tidal lag equal to one-half the mean tidal range.

2) If the wall is permeable (lagging, with spaces between the boards, gravel chimneys connected to weep holes or similar devices [see Figure 6]), treat the water load (saturation level above low water level) as a surcharge. The curves of Figure 6 assume semi-diurnal tides. For diurnal tides, the effects of tidal lag will be less. See Figure 7 for a sample computation illustrating the use of the curves of Figure 6.

d) These allowances for tidal lag do not consider the effects of inundation of the backfill due to overtopping. If overtopping is anticipated and positive provisions have not been made to drain the overflow water away from the wall and to prevent its penetration into the backfill design for an assumed ground water level at the top of the wall. Allow 50 percent overstress (or reduce overall load factor to 1.2) for all loading combinations which include this assumption.

e) Add the tidal lag effect with low water condition on the outboard face.

3.3.4 Allowable Stresses. For Service Classification B, use allowable stresses given in MIL-HDBK-1002/2, Loads.

3.4 Design Details

3.4.1 Scour. Except in deep water, scour at the toe of a seawall during severe storms is inevitable. Provide a toe wall or toe armor to prevent undermining. The following may be used for guidance in detailing toe protection.

3.4.1.1 Width of Toe Armor. (See Figure 3, type H.)

3.4.1.2 Depth to Toe Wall. Assume scour depth below the natural seabed equal to the maximum unbroken wave height consistent with the depth of water at face of wall. For attack by broken waves, and for conditions of progressive shoreline erosion in general, refer to method in Section 5.28 of the Shore Protection Manual, U.S. Army Coastal Engineering Research Center.

Design to ensure the stability of the wall in the scoured condition and provide excess toe armor or toe stone in rubble mounds of revetments to allow for the inevitable settlement and displacement during heavy wave attack.

3.4.2 Overtopping. Overtopping of a seawall in a severe storm is difficult to prevent. If substantive erosion of the upland due to the fall and wash of the water cannot be tolerated, the upland adjacent to, and a distance back of, the wall must be armored against erosion. Pavement close to the wall is required to resist the fall of the water thrown into the air by the impact of waves on the wall. If the upland slopes inshore, provisions must be made to collect and transport the overtopping water and to prevent erosion due to the run-off of said water. Plantings in lieu of pavement seldom work well. Use devices described in para. 3.2.4 to reduce overtopping.

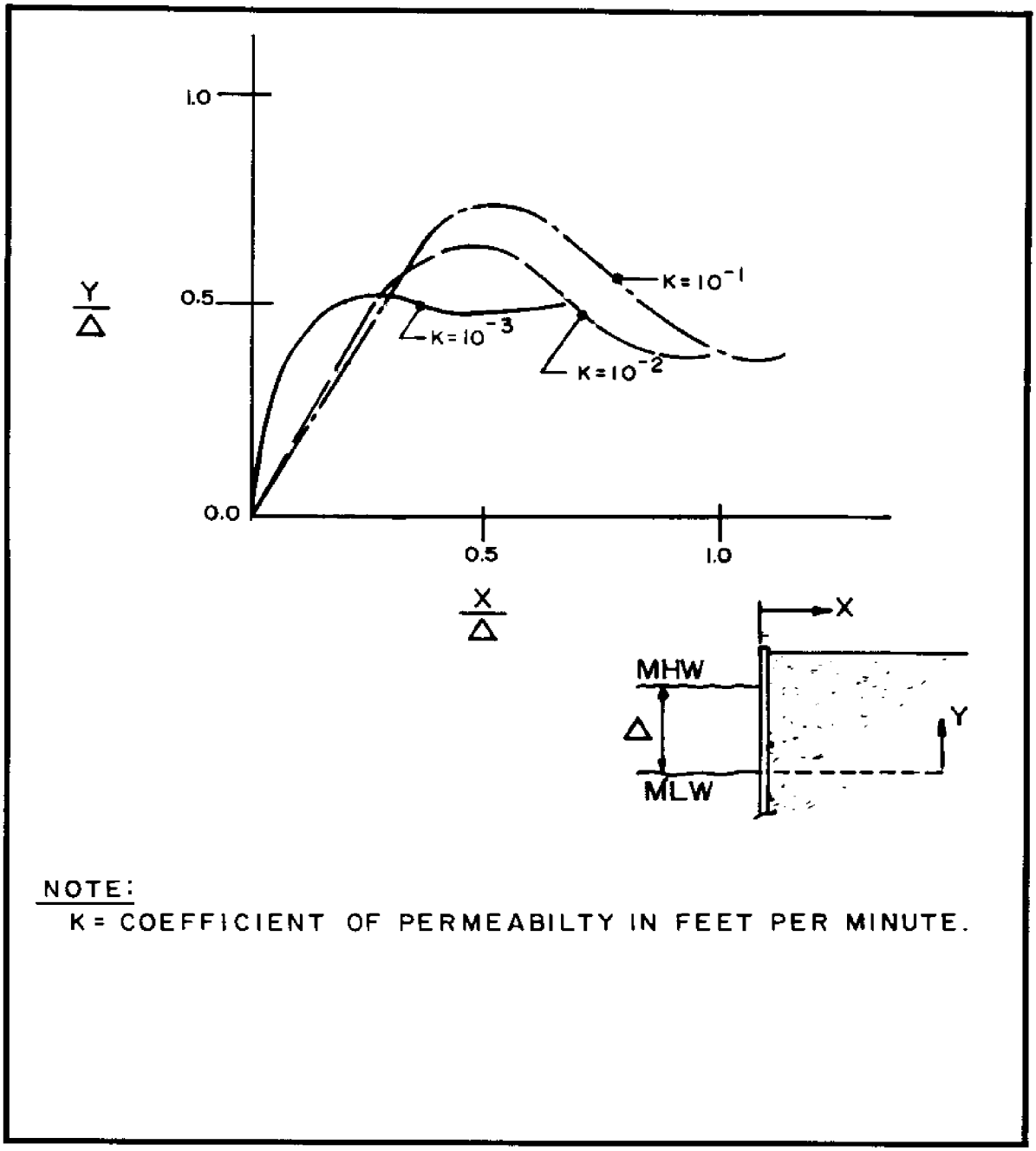

Figure 6
Effect of Tidal Lag

I. Given Conditions

1. Semi-diurnal tide
2. Amplitude (Δ) = 6 ft.
3. Permeable wall
4. Coefficient of permeability (K) of fill material behind the wall = 10^{-2} ft. per minute.

II. Computation of Tidal Lag

1. Maximum hydrostatic pressure on wall is generated when tide level drops to MLW.
2. Immediately behind wall:

$$X = 0, \quad \frac{X}{\Delta} = 0$$

From Figure 3:

$$\frac{Y}{\Delta} = 0, \quad Y = 0,$$ and tidal lag effect is 0.

3. At a section one foot back of the wall:

$$X = 1, \quad \frac{X}{\Delta} = 0.167$$

From Figure 3:

$$\frac{Y}{\Delta} = 0.32, \quad Y = 1.92 \text{ ft.}$$

or water pressure is that of 1.92 ft. of head.

4. Maxium tidal lag effect occurs, approximately, at $\frac{X}{\Delta} = 0.5$, or 3ft. behind the wall. For this section:

$$\frac{Y}{\Delta} = 0.67, \quad Y = 4 \text{ ft.}$$ or the wall should be designed for a tidal lag of about 4 ft. (above MLW).

Figure 7
Sample Computation -
Estimating Magnitude of Tidal Lag on Bulkhead Wall

3.4.3 Joints. A seawall should be as tight and free of cracks and joints as can be economically justified. The repeated action of the waves seeks out and exploits any weakness. This is the reason that sheet pile structures tend to show poor performance if subject to heavy wave attack. Similarly, assemblages of small precast units such as the concrete block revetment shown in Figure 2, type D, and the precast stepped walls shown in Figure 2, type E, and Figure 3, type G, should be limited in use to cases of light to moderate attack. In all cases the joints between precast units should be grouted. Joints in concrete sheet piling should be flushed before grouting. Timber sheet piling should be tongue-and-groove or splined, but not shiplap. Handling holes in precast units and in steel sheet piling should be plugged and splices should be sealed. Openings around utility lines must be tightly caulked. Weep holes require protection at the outlet to minimize wave penetration and require a filter at the inlet end to prevent effusion of fines. Provide shrinkage control by controlling water-cement ratio, careful curing, and placing sequence.

3.4.4 Compartmentation. Design on the assumption that a long run of seawall may be breached. Provide diaphragms perpendicular to the run of the wall at 100 to 200 foot intervals, depending upon the intensity and sensitivity of the upland development. Provide returns at the ends of the wall to prevent flanking.

3.4.5 Drainage. Provide drainage of the backfill behind impervious walls to prevent buildup of hydrostatic pressure. (See details in Figures 1, 2 and 3.)

3.4.6 Inundation of the Backfill. The provisions for drainage described in para. 3.4.5 are not intended to be sufficient to prevent inundation of the soil behind the wall due to overtopping or insufficient surface drainage, should the upland be graded to drain to the wall. Pavement and scuppers should be provided wherever possible to prevent the infusion of surface water into the backfill, whether due to surface drainage or due to overtopping. If not prevented by positive means, assume that the backfill will be inundated at some time during the service life of the seawall. Assume also that the rate of inundation will exceed the discharge capacity of chimney drains and weep holes (which will be submerged at the time of overtopping). Design as described in para. 3.3.3 d) for lateral pressures incident to ground water level behind the wall.

3.4.7 Passive Resistance of Soil. Discount passive resistance to depth of anticipated scour at toe of wall. Be aware also that the development of passive resistance requires movement of the wall which, in general, is greater than the deflections which can be accommodated by bending of the structure. For example, the elastic deflection in flexure of a cutoff wall or of piles, where present, normally is incompatible with the displacement required for development of passive resistance on said wall. Due to such incompatibility, the two resistances may not be added. The design must be detailed to accommodate these displacements and must consider that, since the soil is not uniform, the displacements will not be uniform. Examples of details to accommodate movement are shown in Figures 4 and 5.

3.4.8 Inclined Face Designs. In stepped face or other construction utilizing a slab-on-grade, design the slab to support self-weight plus the impact of breaking waves spanning over local voids or weak spots in the subgrade. Where applicable, also design to resist hydrostatic uplift due to inundation of the backfill.

3.4.9 Elevation of Top of Wall

3.4.9.1 Inclined Face Designs. Minimize overtopping of seawalls and erosion of upland areas by setting the elevation of the wall top above the level of breaking wave rush-up. Generally, it is not economically feasible to prevent overtopping completely, but it is desirable that the top of walls be located approximately at the limit of run-up for the design wave. For approximate determination of run-up (swash height), refer to NAVFAC DM-26.2. For rates of overtopping, refer to the Shore Protection Manual.

3.4.9.2 Vertical or Curved Face Designs. The top of these walls should be set at least twice the incident significant wave height above still water level (elevated for storm surge).

Section 4. BULKHEADS

4.1 Types of Construction. General types of construction are shown schematically in Figures 8, 9, and 10. Examples of actual constructions are shown in Figures 11, 12, 13, 14, and 15.

4.2 Selection Factors - Types of Construction

4.2.1 Cantilever Wall. This type of wall tends to creep "out of line" because of variations in soil properties (active pressure and passive resistance). To a degree, this can be compensated for by the use of a heavy cap to stiffen the wall and to increase the radii of curvature of the differential movements which occur. Alternately, consider increasing embedment of the toe in order to reduce total movement, or limit use of a cantilever wall to areas having compact, granular soils. Whatever is done, however, a straight line is unlikely to be maintained. Some "sinkage" of the upland should be expected as the ground settles to fill the void resulting from the wall movement.

Increased depth of embedment of the sheet piling is required with accompanying increase in cost and difficulty in driving. As a result, a cantilever wall often is less economical than an anchored wall, particularly if a simple deadman anchorage can be used.

The principal advantage of a cantilever wall often is minimum property encroachment and minimum interference with adjacent constructions.

4.2.2 Anchored Wall With Single Level of Anchorage. This is the usual form of bulkhead (see Figure 16).

4.2.3 Relieving Platform. This type of construction is used to reduce the lateral pressure acting on the sheeting. In essence, the surcharge and a portion of the weight of the fill are carried as vertical load to a deep level where they do not have an influence on the sheeting (see Figure 17). This allows deeper walls to be built and heavier loads to be supported within the strength limitations the strength limitations of the sections of sheet piling which are commercially available.

There is an additional effect of the relieving platform in reducing the lateral pressures acting on the bulkhead wall. This is the screening effect of the piles supporting the platform. For granular soils, tests indicate that where the ratio of pile diameter to pile spacing (ba) is greater than or equal to 0.5, the screening effect is complete and none of the lateral pressure goes to the front wall. For ba=0 (when no piles are used), full pressure goes to the front wall. For intermediate values of ba, interpolation would be appropriate; however, the bearing piles must be designed to resist the lateral pressures incident to the screening effect.

With regard to reduction in pressure on the closure wall due to wall friction (see Figure 18).

4.2.4 Batter Piles in Lieu of Anchor System. (See Figure 9, type D.) Consider batter piles when there is a need to limit property acquisition or where nearby structures would interfere with an anchor system and depth (height of wall) is excessive for use of cantilever wall.

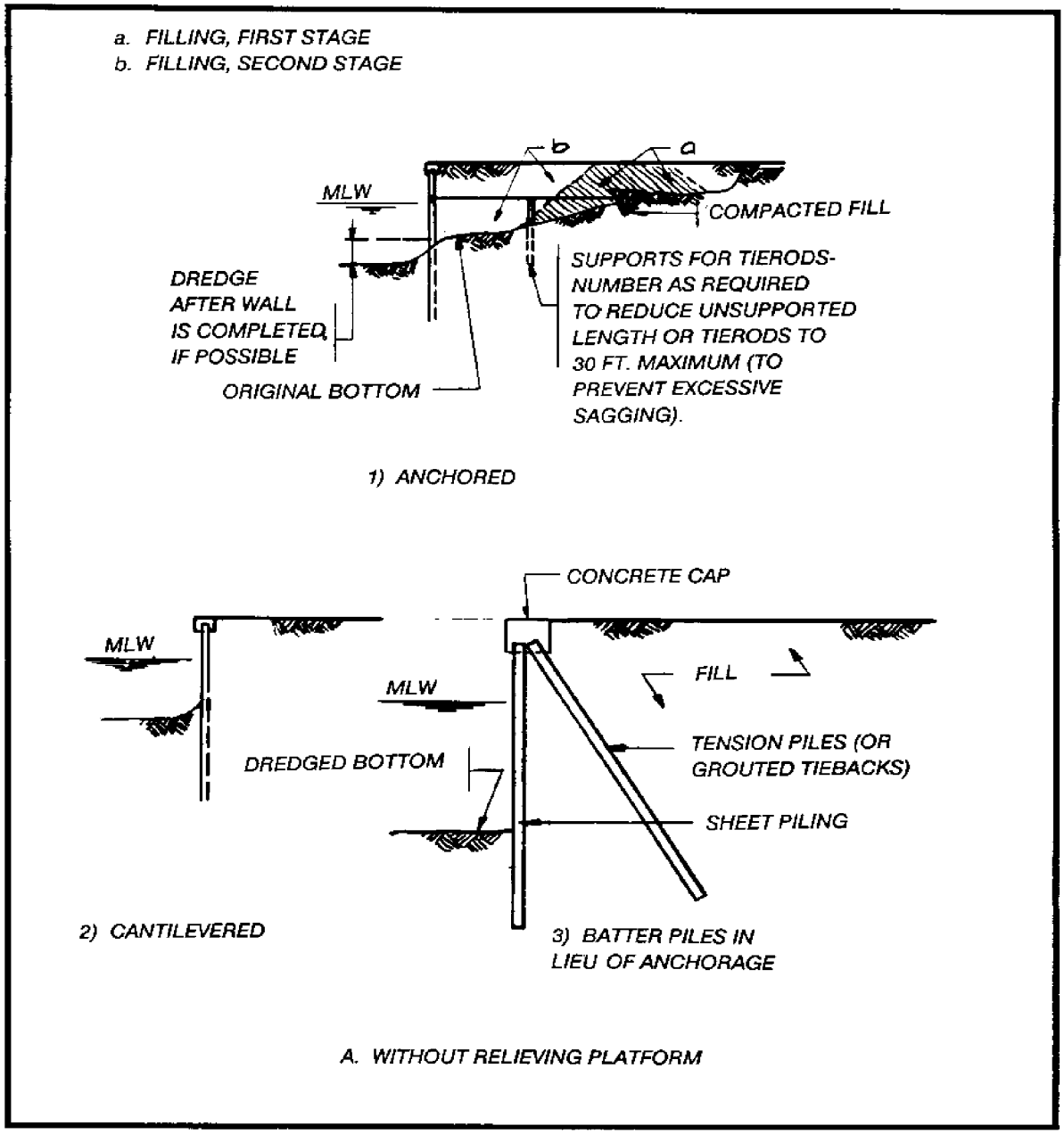

Figure 8
Type of Bulkheads (Example A)

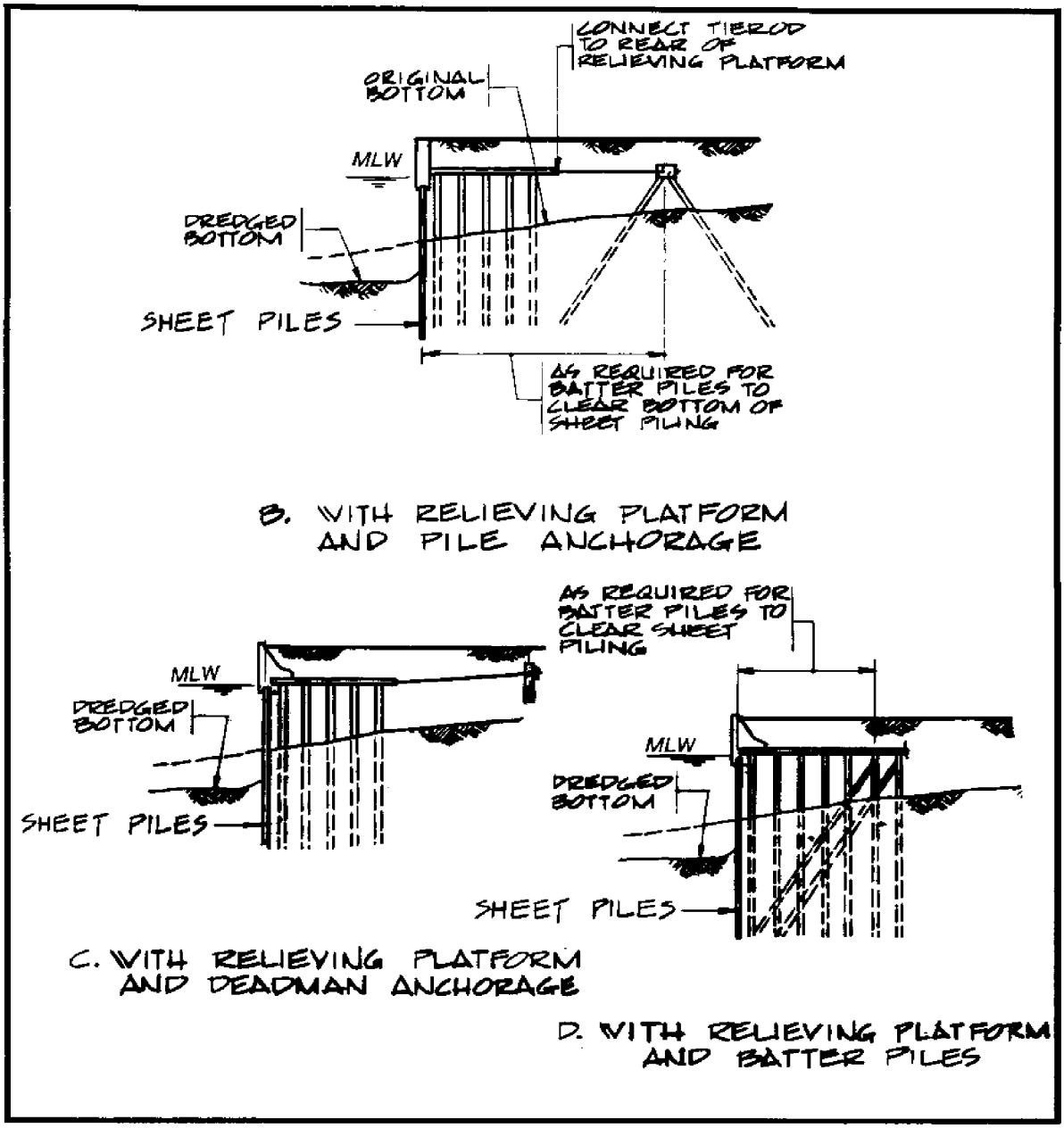

Figure 9
Types of Bulkheads (Examples B thru D)

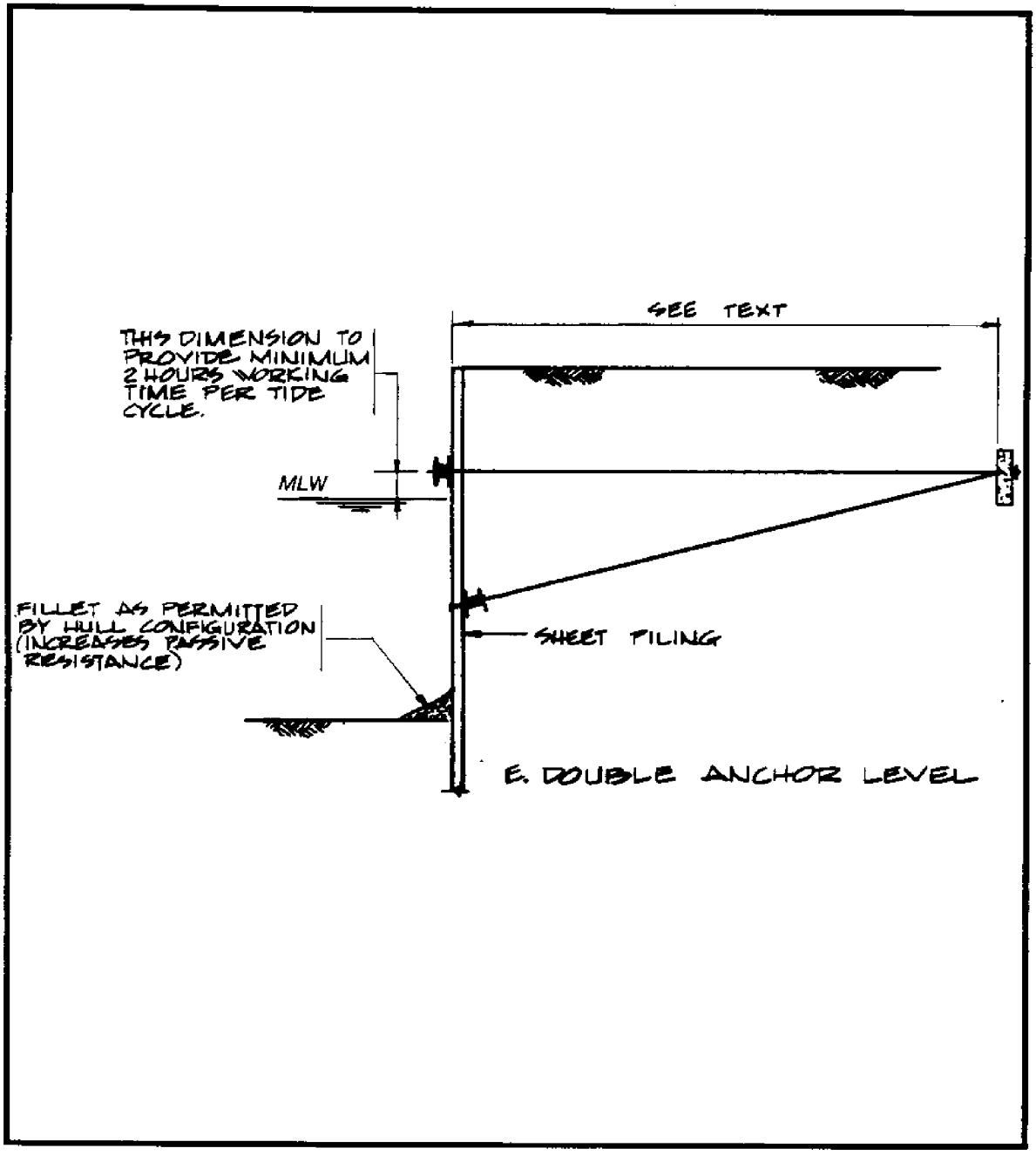

Figure 10
Type of Bulkheads (Example E)

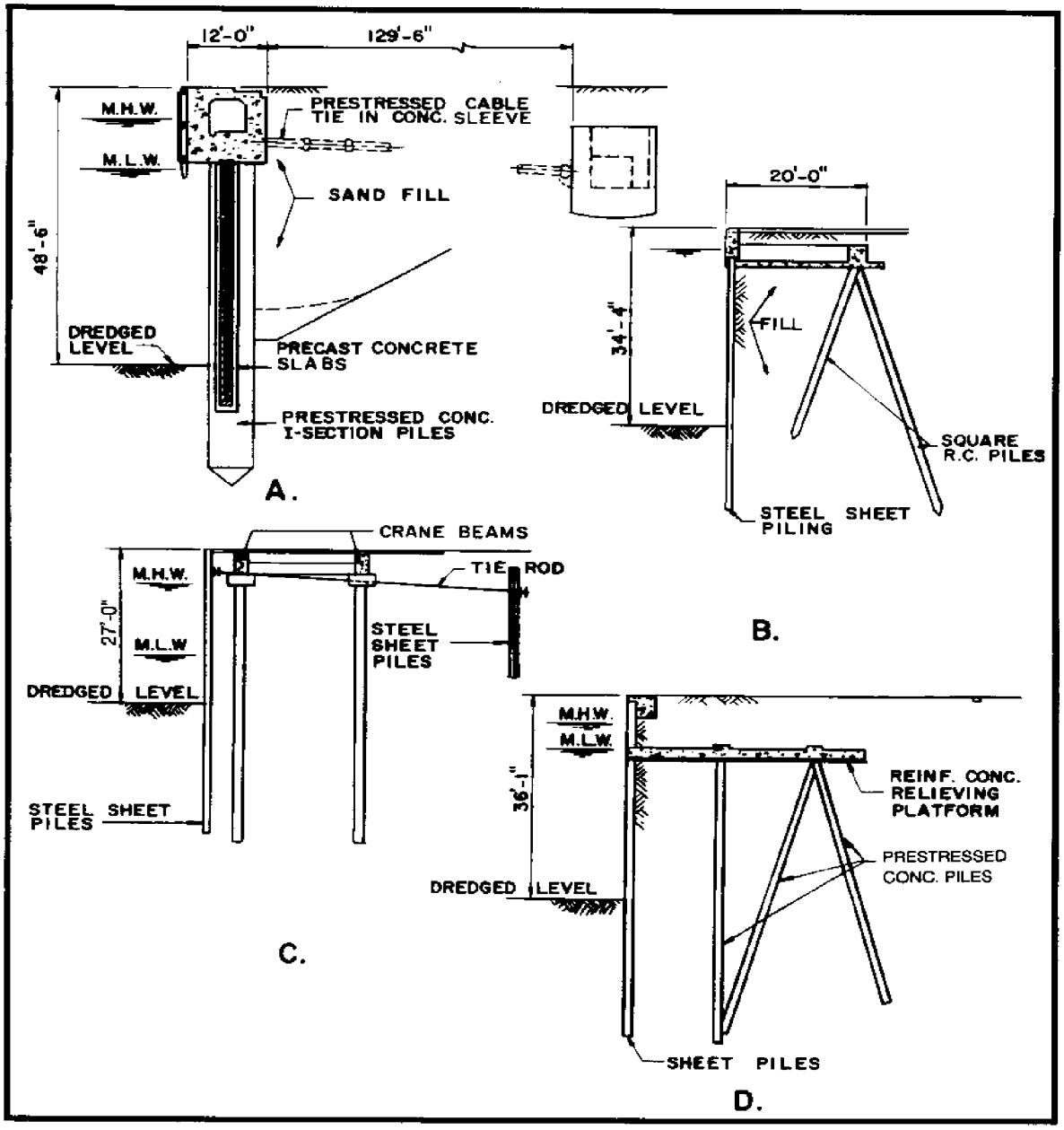

Figure 11
Bulkheads - Actual Construction (Examples A thru D)

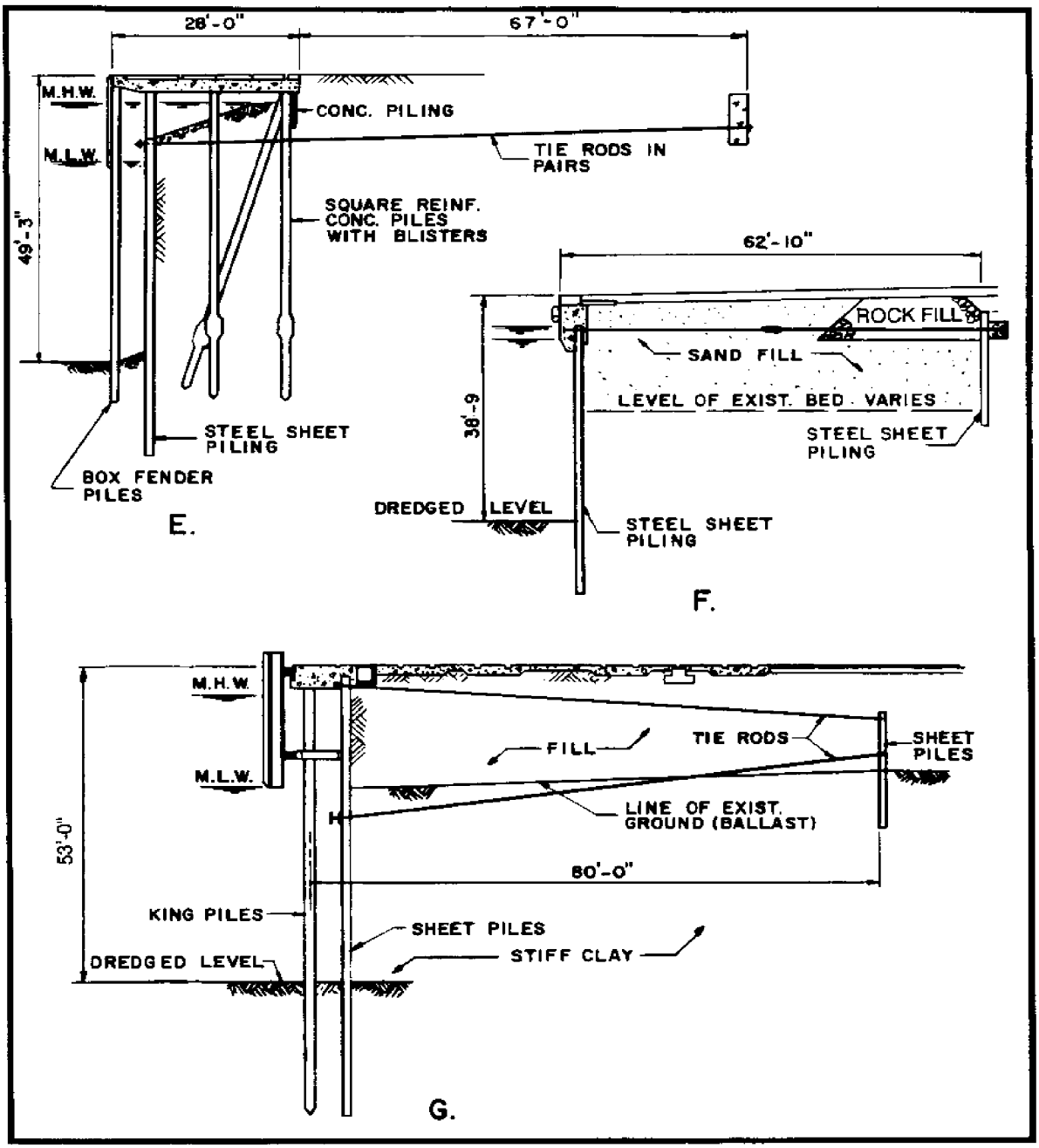

Figure 12
Bulkheads - Actual Constructions (Examples E thru G)

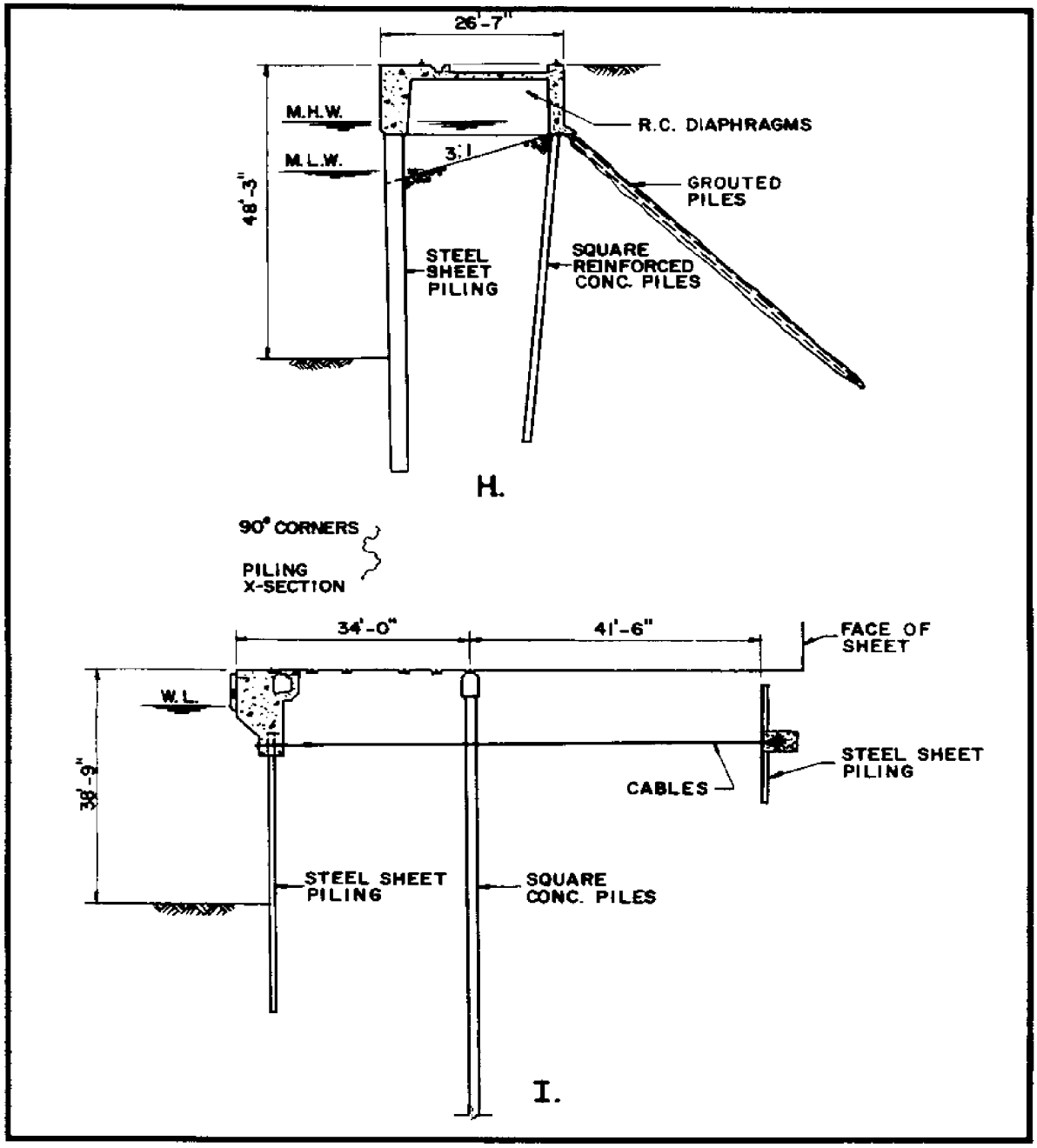

Figure 13
Bulkheads - Actual Construction (Examples H and I)

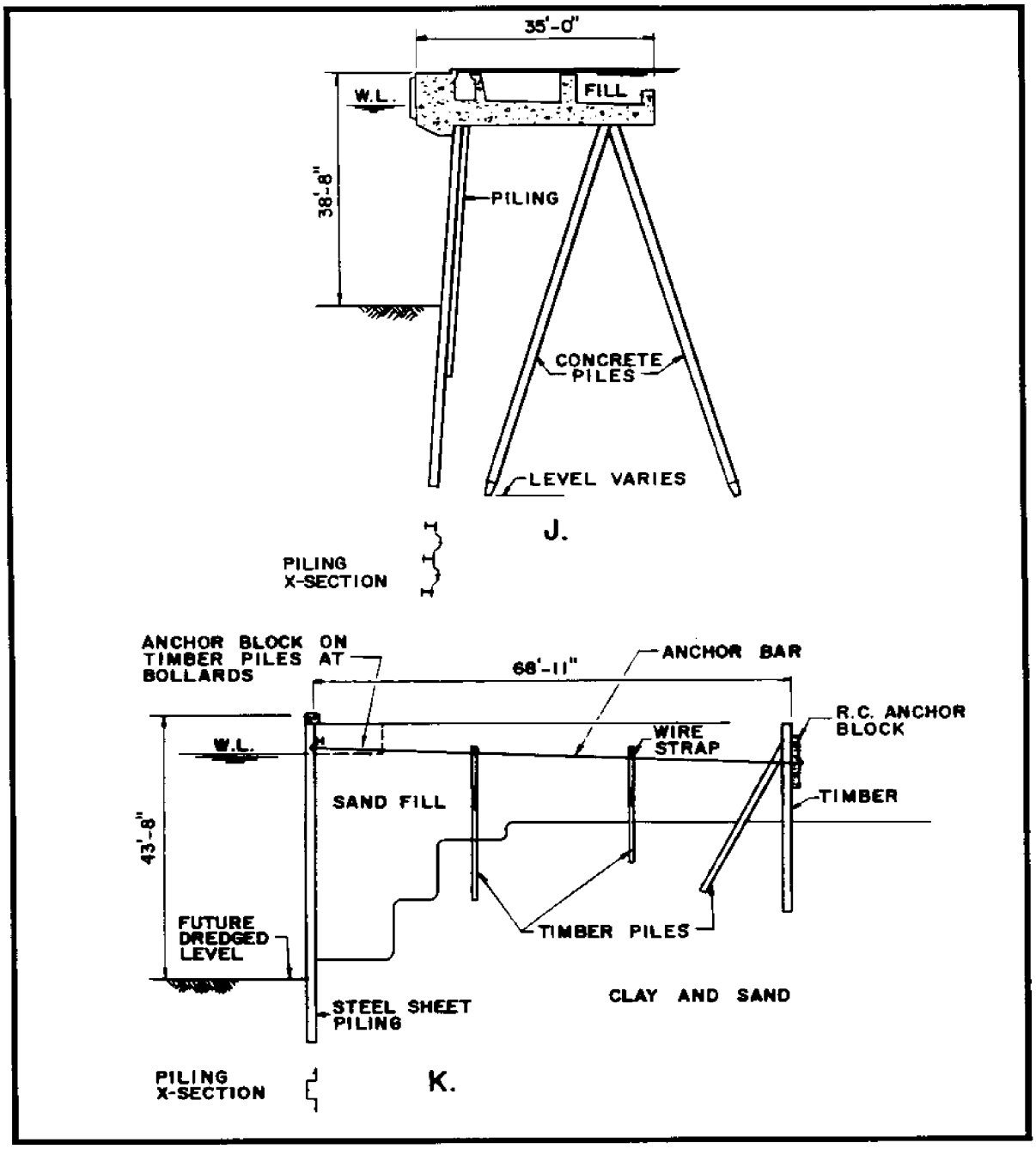

Figure 14
Bulkheads - Actual Constructions (Examples J and K)

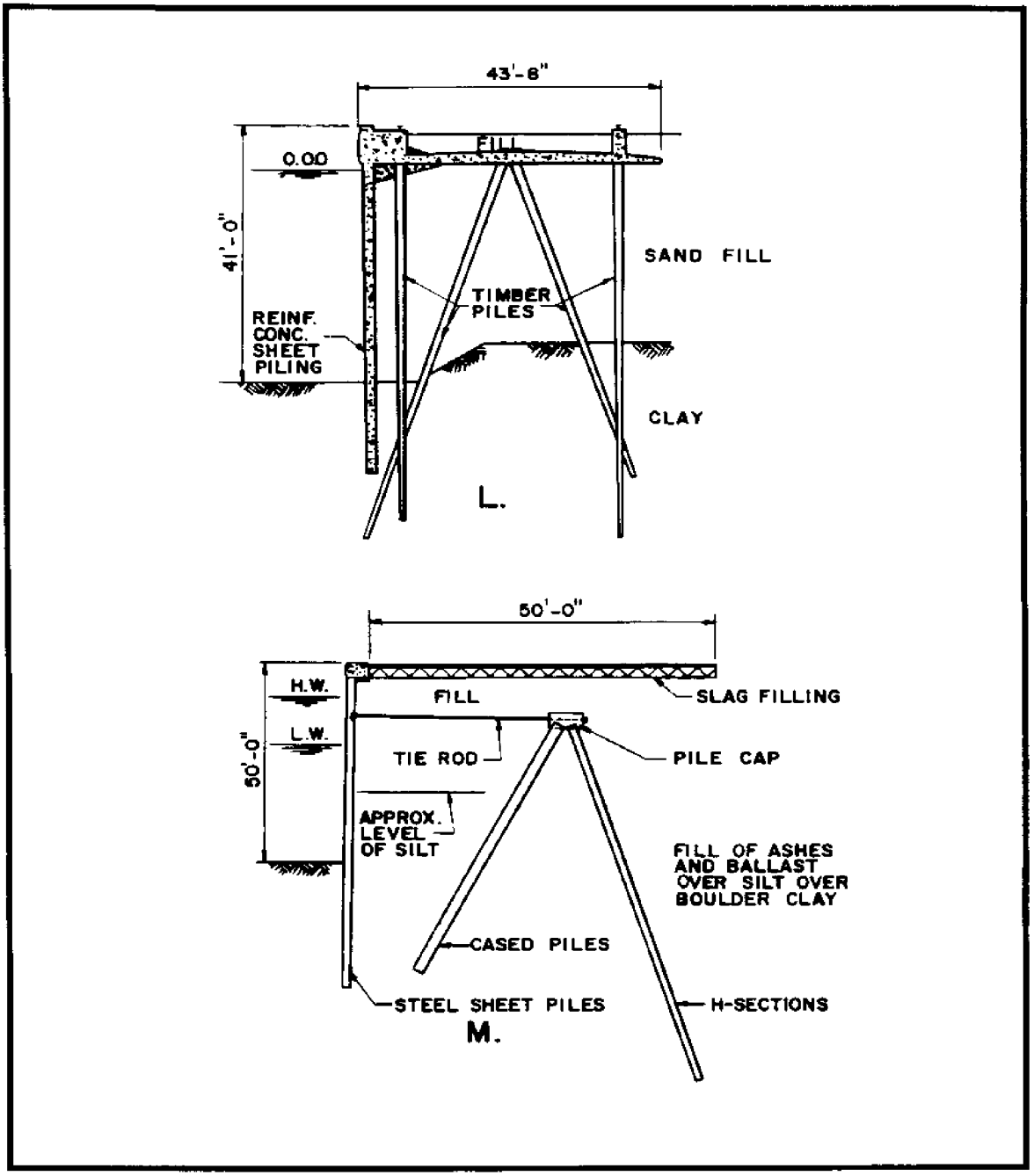

Figure 15
Bulkheads - Actual Constructions (Examples L and M)

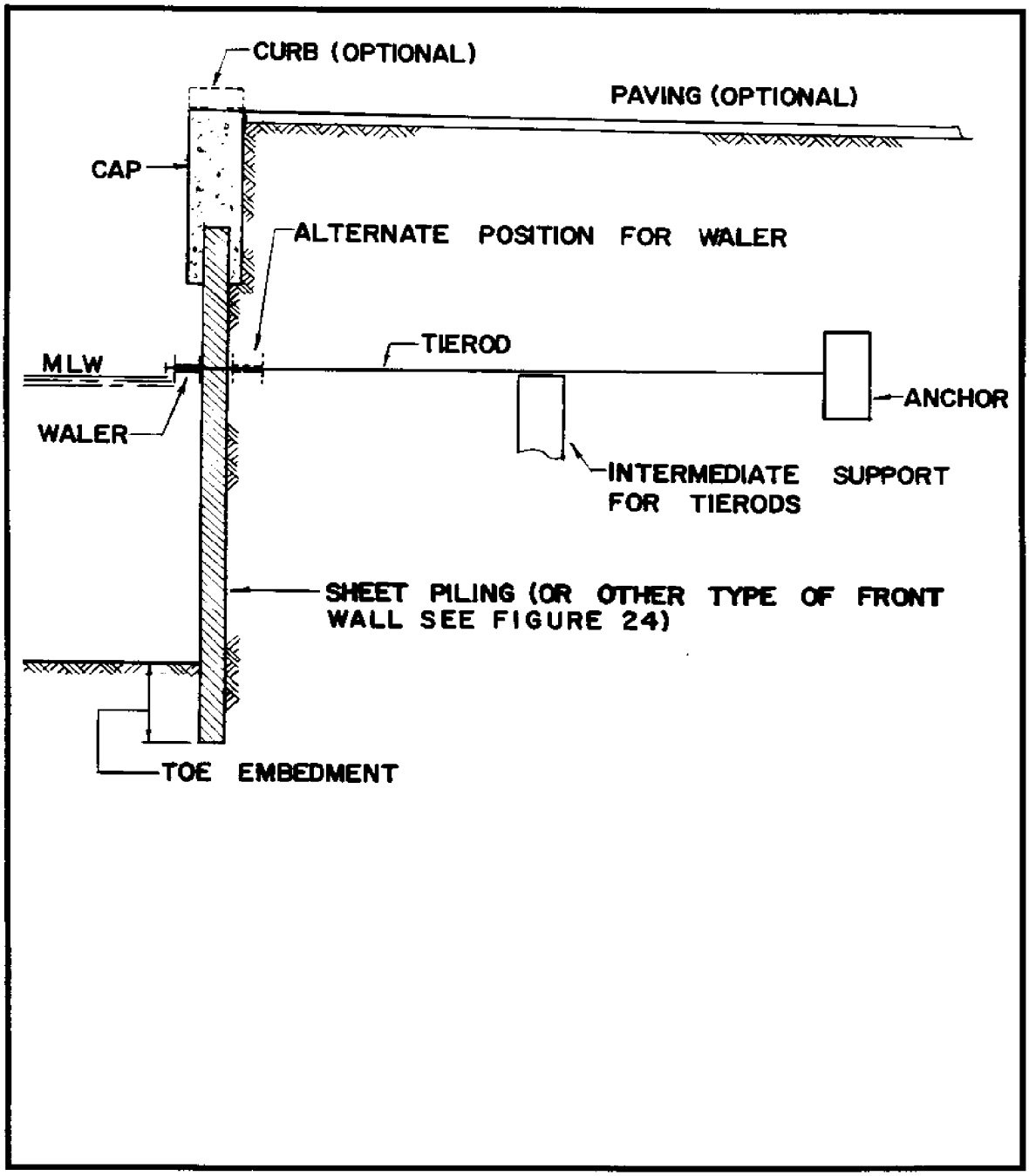

Figure 16
Anchored Wall With Single Level of Anchorage

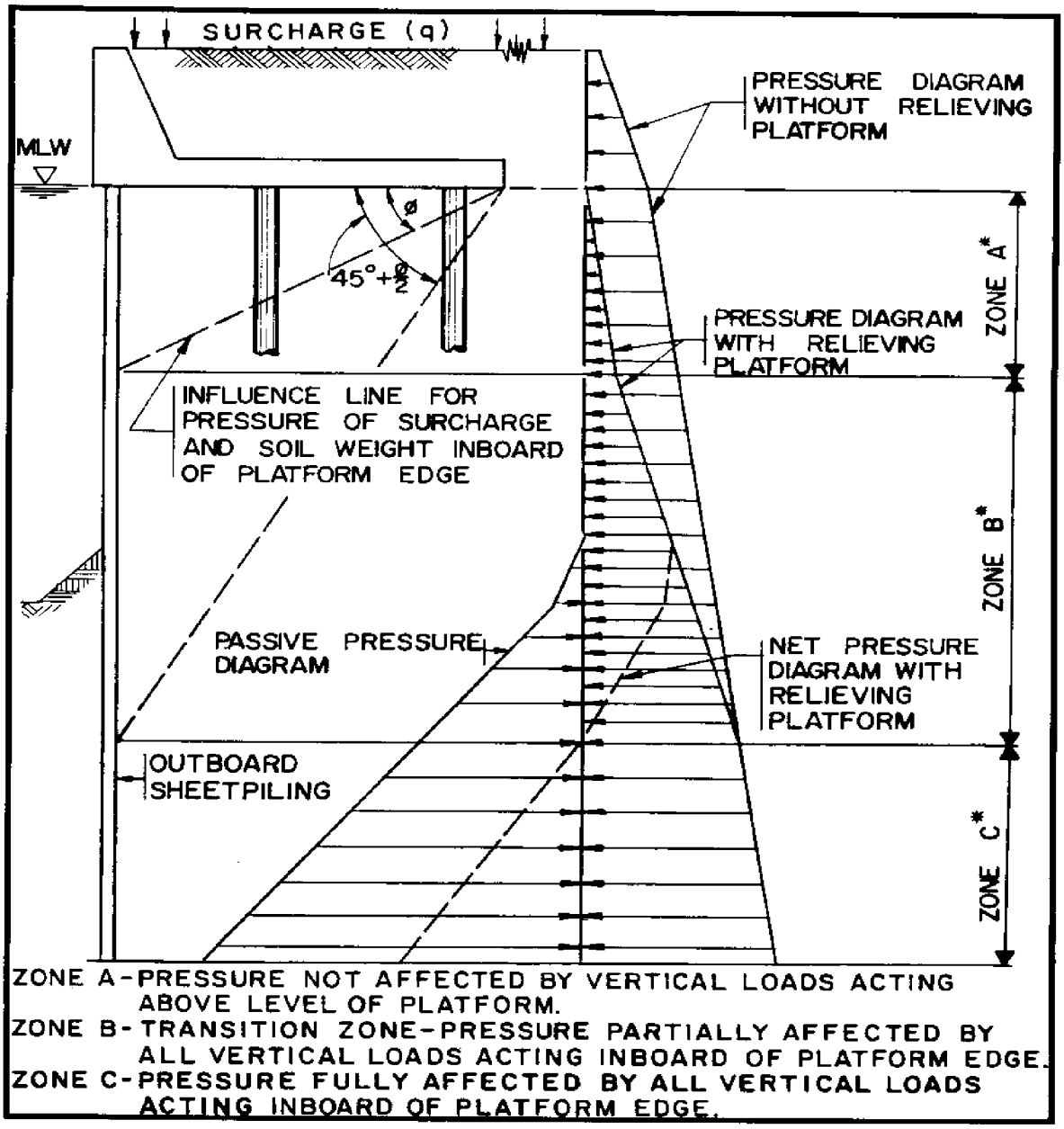

ZONE A - PRESSURE NOT AFFECTED BY VERTICAL LOADS ACTING ABOVE LEVEL OF PLATFORM.
ZONE B - TRANSITION ZONE - PRESSURE PARTIALLY AFFECTED BY ALL VERTICAL LOADS ACTING INBOARD OF PLATFORM EDGE.
ZONE C - PRESSURE FULLY AFFECTED BY ALL VERTICAL LOADS ACTING INBOARD OF PLATFORM EDGE.

Figure 17
Relieving Platform

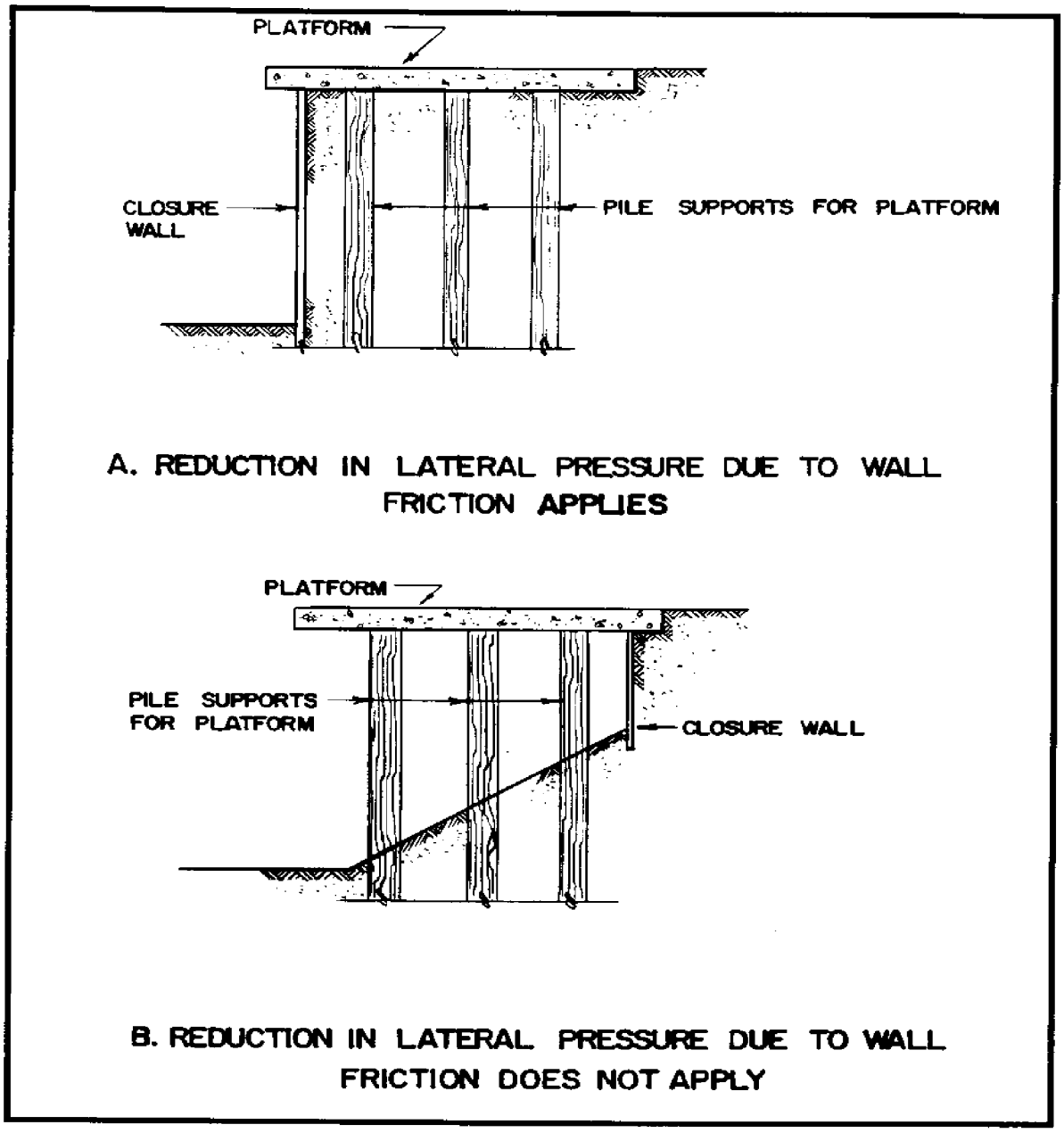

Figure 18
Reduction in Pressure on Closure Wall Due to Friction
(Examples A and B)

4.2.5 Hard Bottom. Where impenetrable material exists at shallow depth such that sufficient toe resistance cannot be developed in the overlying soil, consider the use of soldier piles drilled into the hard bottom or set sheeting into a trench, blasted the hard bottom or set sheeting into a trench, blasted out of hard material. For reasons of incompatibility of strains, passive resistance in the hard material normally may not be added to the passive resistance of the looser overlying material. Similarly, the keying effect which can be attained by driving steel piling to refusal into the hard material should not be considered as adding to the passive resistance of the looser overlying material.

4.2.6 Soft Bottom. (See Figure 19.) Where a soft bottom creates problems with developing adequate toe resistance, consider excavating and replacing the soft material or strengthening the material by the use of:

a) sand blanket,

b) sand drains (with surcharge and waiting period),

c) compaction piles, or

d) heavy rock fill which will penetrate the soft material.

4.3 Special Measures. Where a high (deep) wall, heavy surcharge, or poor soil conditions require exceptional bending strength of the front wall, consider the special measures as described in paras. 4.3.1 through 4.3.7.

4.3.1 Use of Lightweight Material. Slag or shell, for example, when used as fill behind the wall, reduces the lateral pressure acting on the wall (see Figures 20 and 21).

4.3.2 Multiple Levels of Anchors. (See Figure 10, Example E.) This requires the use of divers to bolt sheets to lower wales which is facilitated by use of inside wales. The capacity of the sheeting should be estimated by plastic analysis as yield conditions are likely to occur locally in both sheeting and wales. The basic reason is that the sheeting will not be plumb nor will the wales be straight. Excess toe resistance and anchor rod capacity is required to compensate for the uncertainty of the distribution of lateral resistances. Special care is required to equalize the tension in the tie rods.

4.3.3 Use of Non-Domestic or Built-up Sections. Figures 22 and 23 illustrate some steel sections which are available from non-domestic sources and some devices for strengthening commercially available domestic materials.

4.3.4 High-Strength Sheet Piling. Steel sheet piling with yield strengths of 50,000 psi (14.66 x 107 kg/mm2) or greater, are commercially available.

4.3.5 Modification of Characteristics of Soil Behind Wall. The characteristics of the upland fill may be modified by interposing a dike or blanket of better materials (see Figure 24).

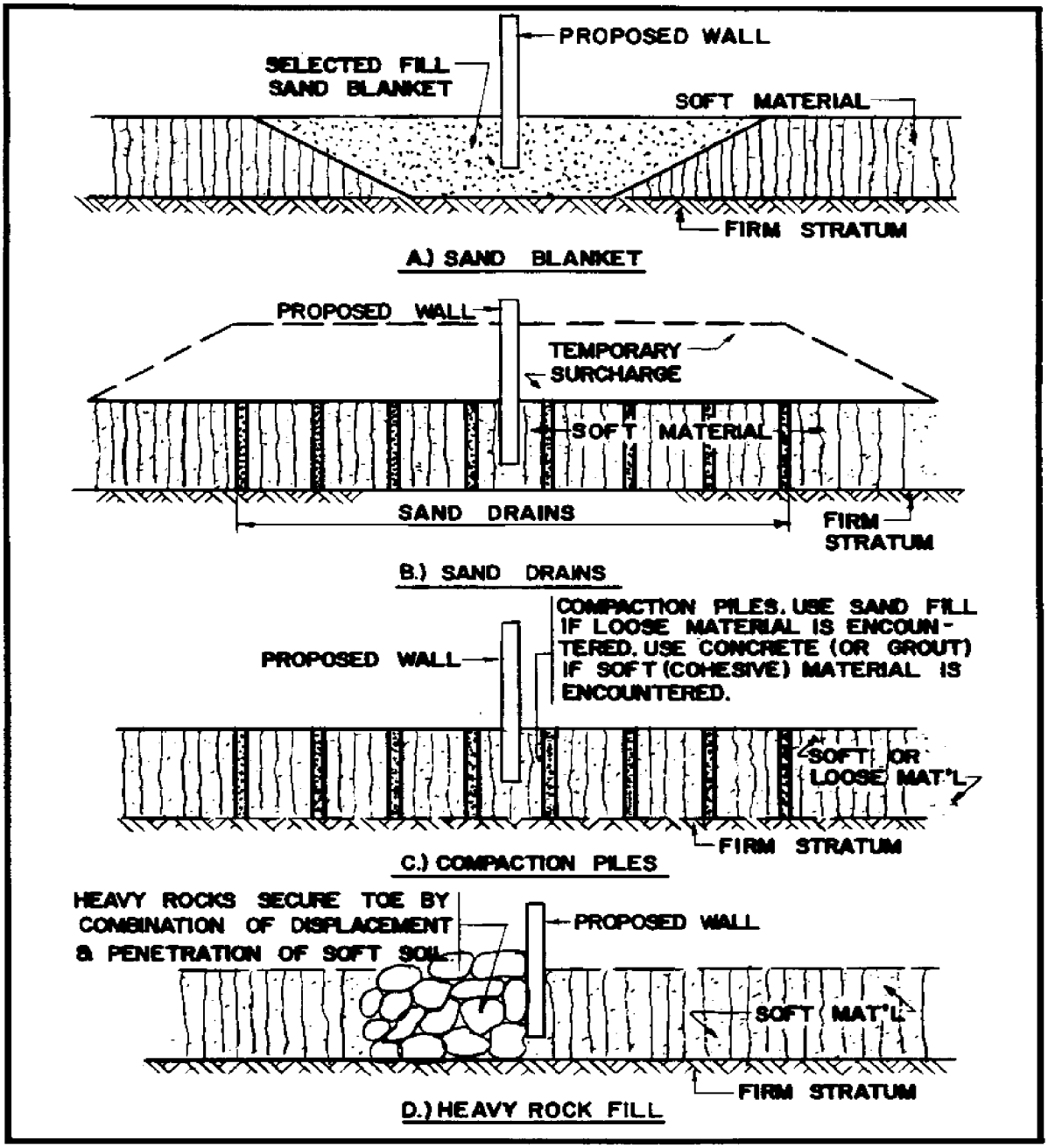

Figure 19
Construction in Soft Material (Examples A thru D)

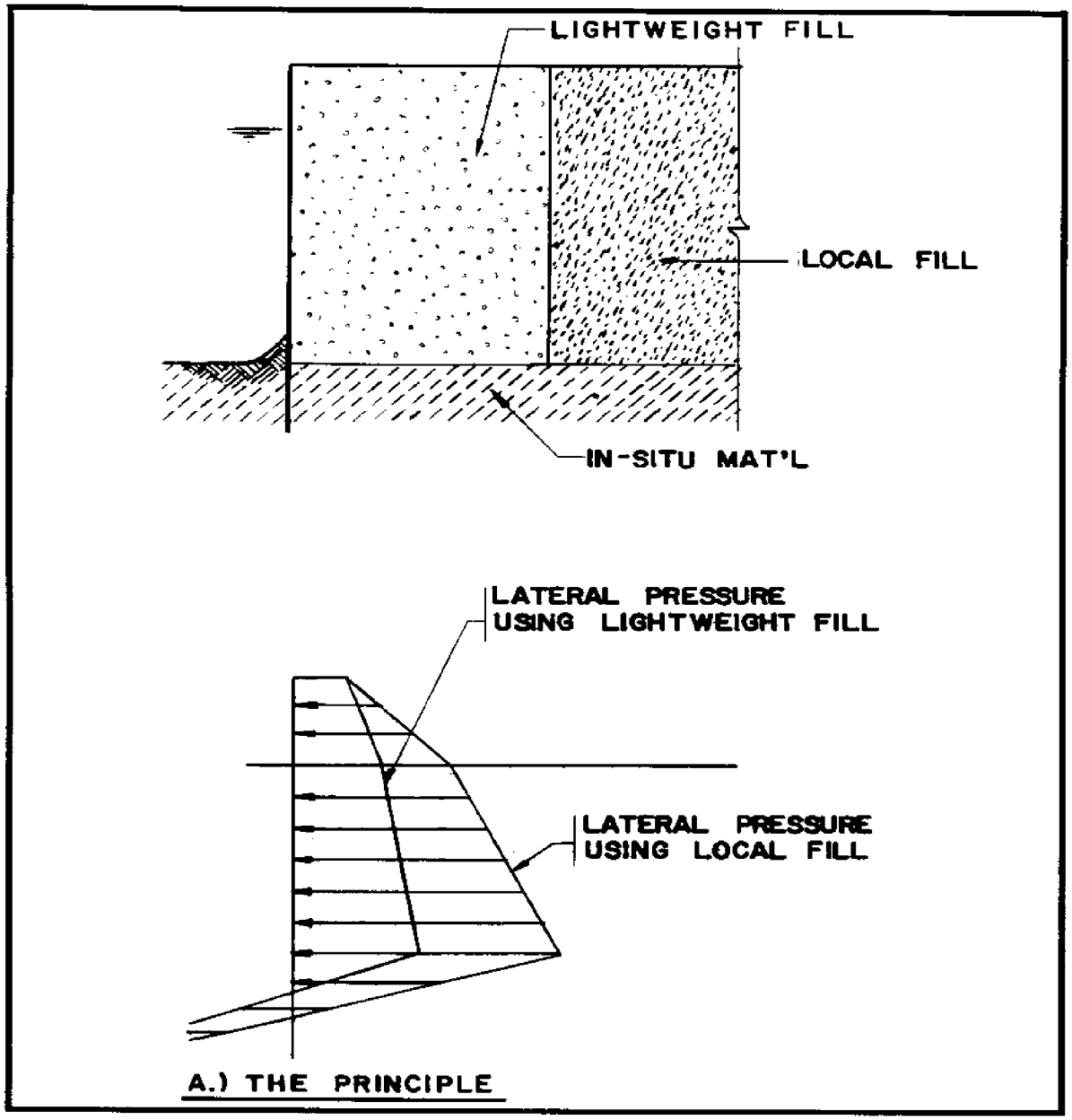

Figure 20
Use of Lightweight Material (Example A)

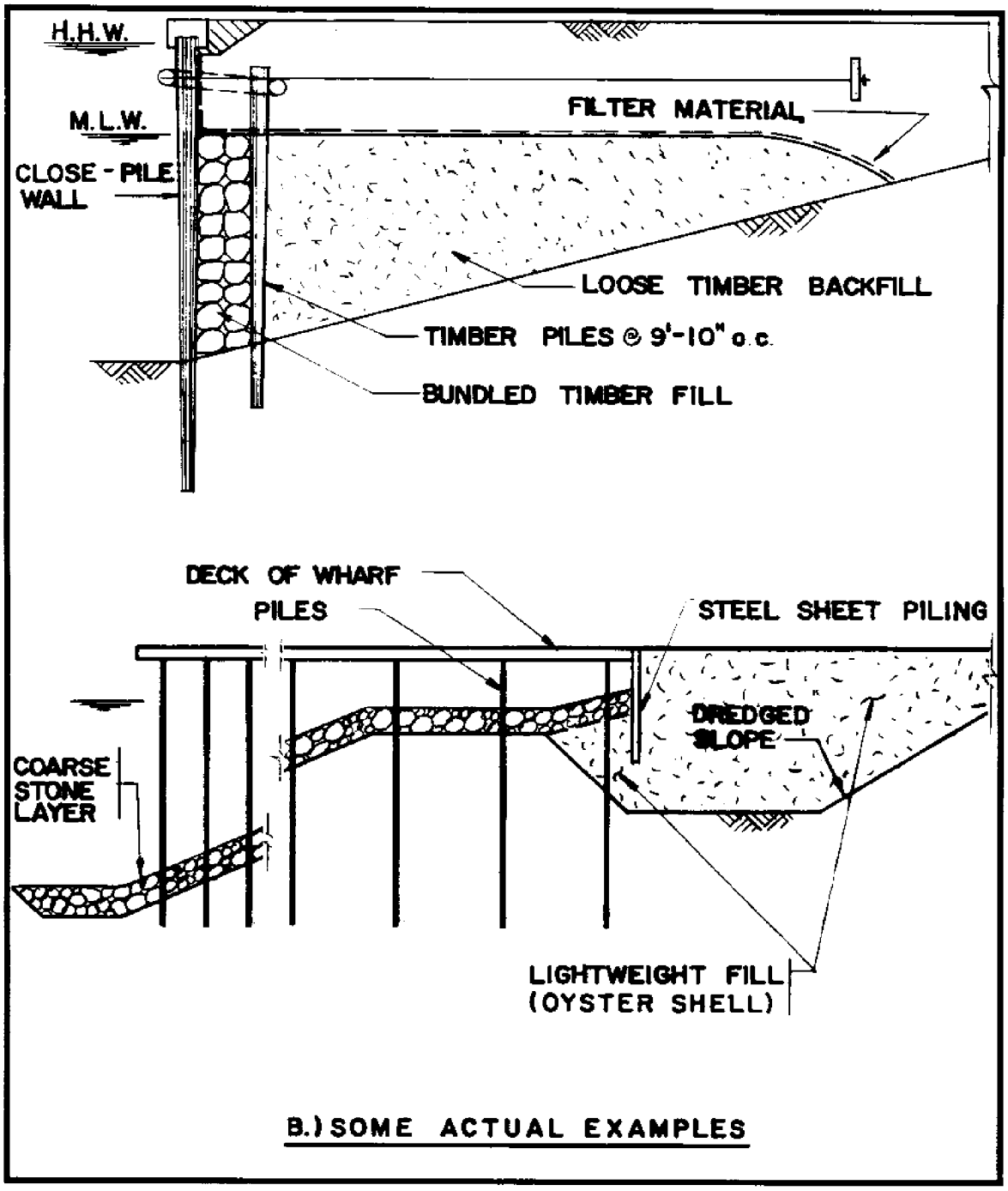

Figure 21
Use of Lightweight Material (Example B)

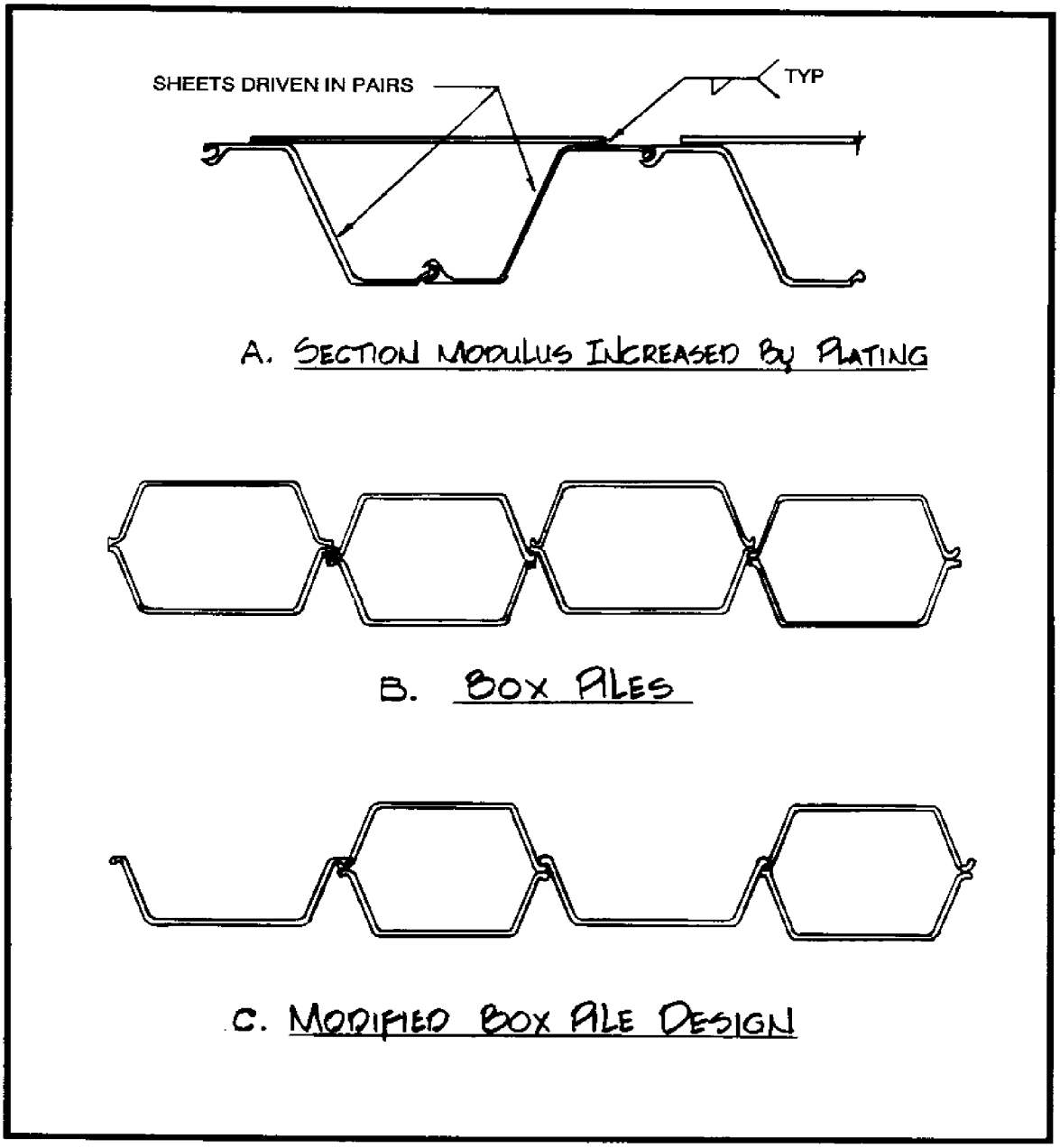

Figure 22
Special Types of Bulkhead Sheeting (Examples A thru C)

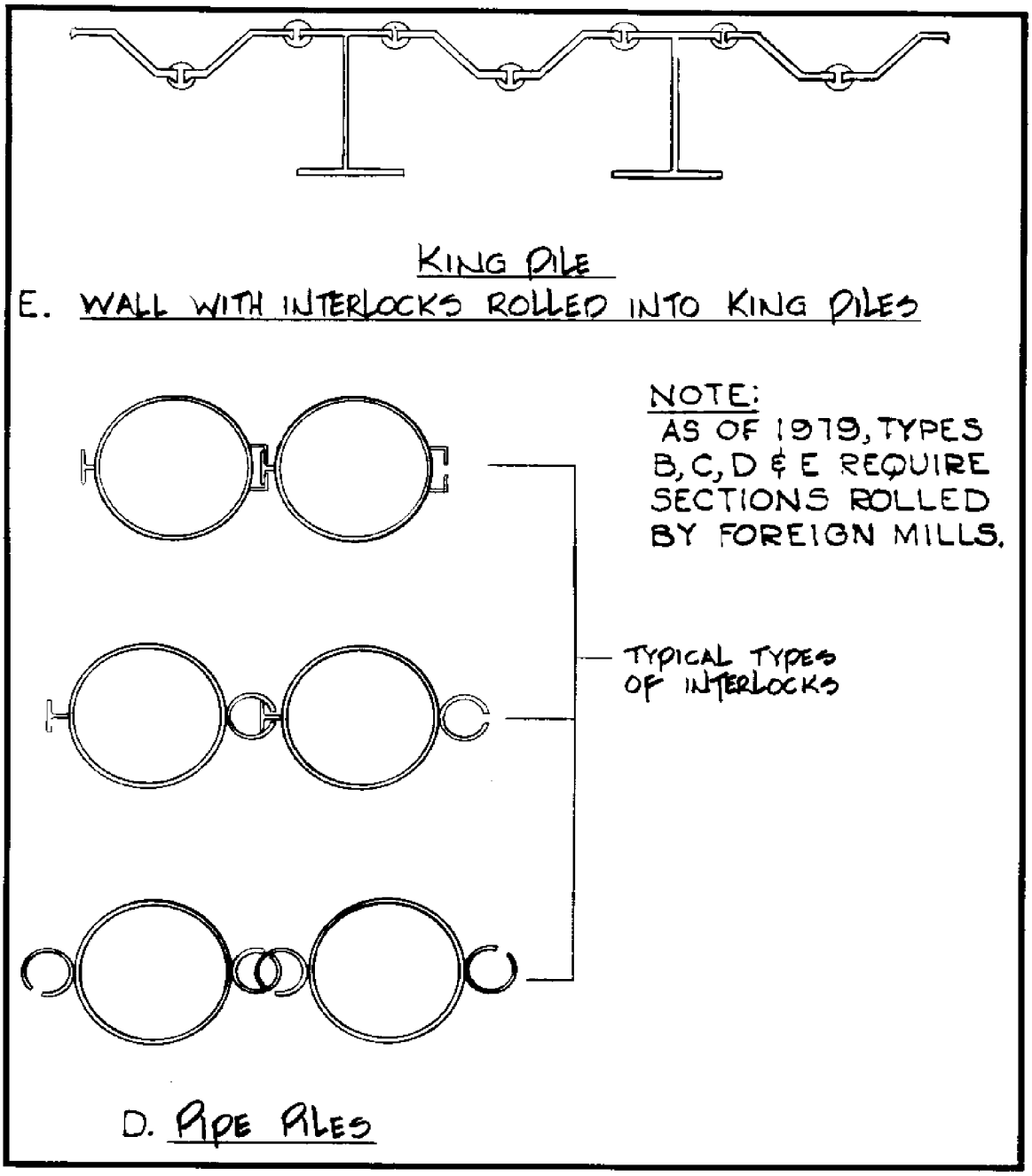

Save for Figure 23
Special Types of Bulkhead Sheeting (Examples D and E)

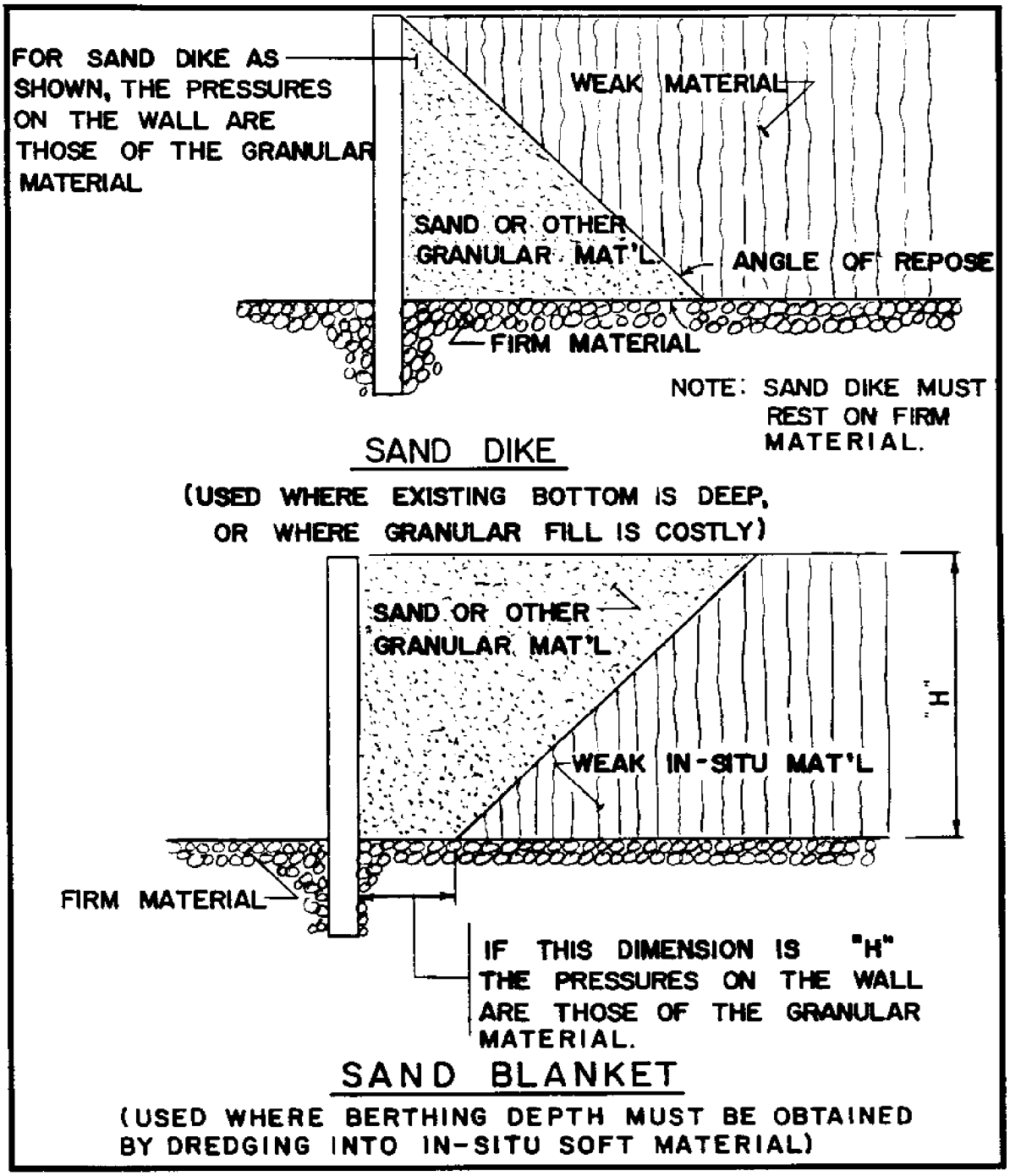

Figure 24
Sand Dike and Sand Blanket

4.3.6 Fixation of Tops of Sheet Piling. (See Figure 25.) This scheme reduces the moment in the sheet piling by fixing the upper end as well as the lower end. In effect it creates a fixed-end beam.

4.3.7 Methods to Reduce Wave Action. (See Figure 26.)

4.4 Types of Front Wall. (See Figure 27.)

4.5 Selection Factors - Types of Front Wall

4.5.1 Sheet Piling. (See Figure 27, Examples A, B, and C.) This type of construction is the usual selection and should be given primary consideration even if the use of cover plates to strengthen available rolled sections is required, the selection of steel, timber, or concrete (for low walls, aluminum, fiberglass, and corrugated asbestos may be considered) is a matter of relative cost. For concrete or timber sheet piling, which displace a large volume of soil during installation, consideration must be given to achieving the required toe penetration without excessive driving and damage to the sheets. Jetting often is required.

4.5.2 Soldier Pile Wall (also called "King" Pile Wall). Where the strength of available sections of sheet piling is insufficient for the proposed height of wall and loading, consider a soldier pile wall (Figure 28, type D). By using heavy soldier beams, large bending capacities can be achieved. The sheeting between the soldier piles is draped to act as a catenary (in tension). In the case of the PZ, PDA, and PMA sections, pure catenary action is not achieved. The fill "arches" between the soldier beams so that the sheeting gets little load. The sheeting is not "designed." For normal spacing of the soldier piles (about 6 to 12 ft) (1.83 to 3.66 m), and assuming the soil behind the wall does not consist of soft clay or silt, minimum commercial sections of sheet piling are adequate.

4.5.3 Soldier Beams and Lagging. Sometimes a bulkhead can be constructed in the dry. An example is when dredging is to be done after the wall has been completed. In such a case, use of soldier beams and lagging often is a more economical solution than the use of sheet piling. One of the reasons is that the lagging can be virtually any material. Timber, concrete, aluminum, galvanized steel, and corrugated fiberglass have all been used.

As with the soldier pile wall, arching between the soldier beams reduces the pressures acting on the lagging so that the lightweight sections can be employed. Theories as to pressure acting on lagging vary from an assumption of full arching wherein pressures may be estimated by considering the soldier beams as a series of silo walls (see Figure 29) to assumptions of partial arching. In its simplest form, partial arching is estimated by applying a reduction factor (often 13 to 12) to the basic trapezoidal pressure diagram. For timber lagging, assuming the use of commercial lumber and not stress graded lumber, the recommendations in Table 1 may be followed.

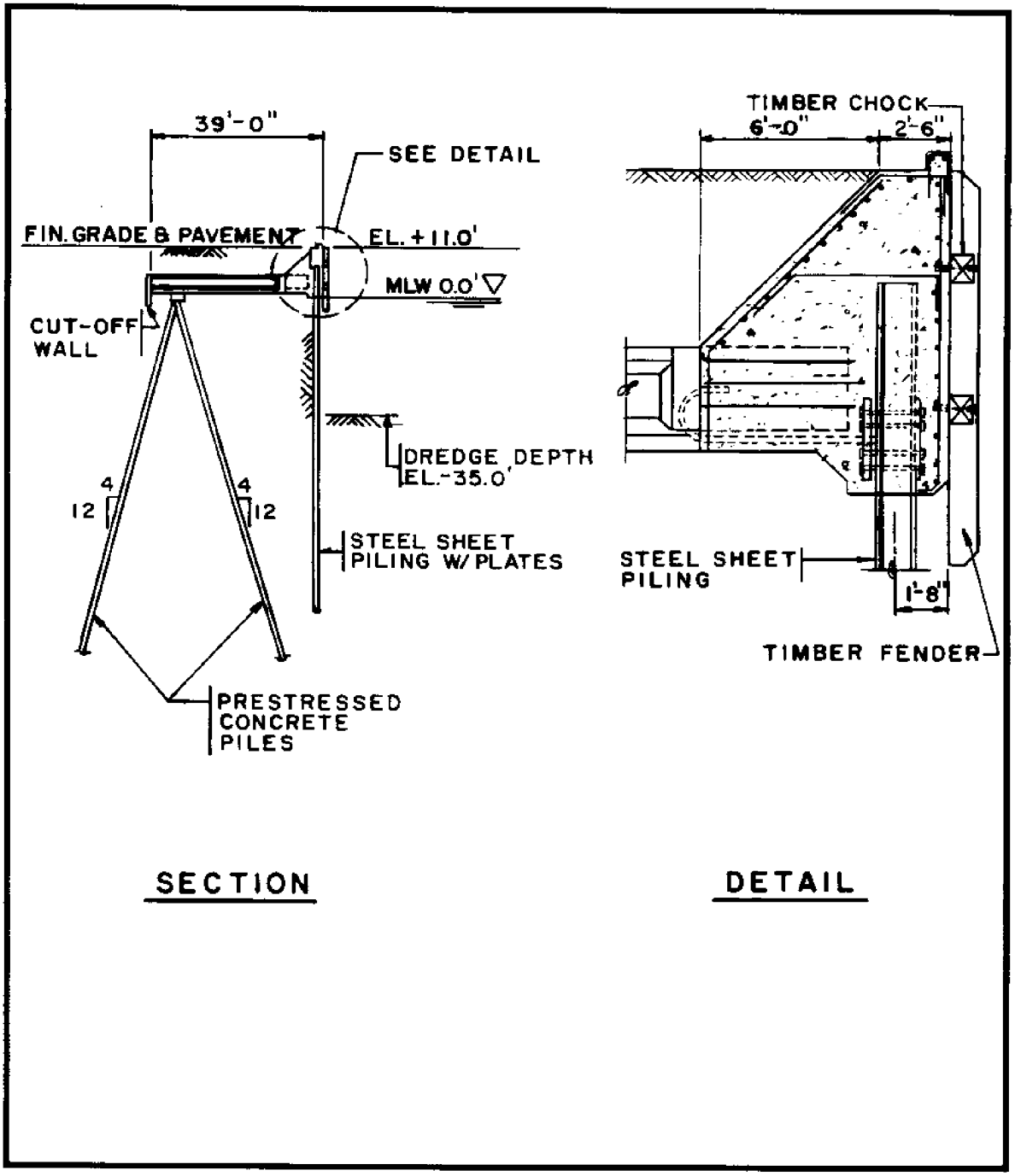

Figure 25
Sheet Piling With Fixed Ends

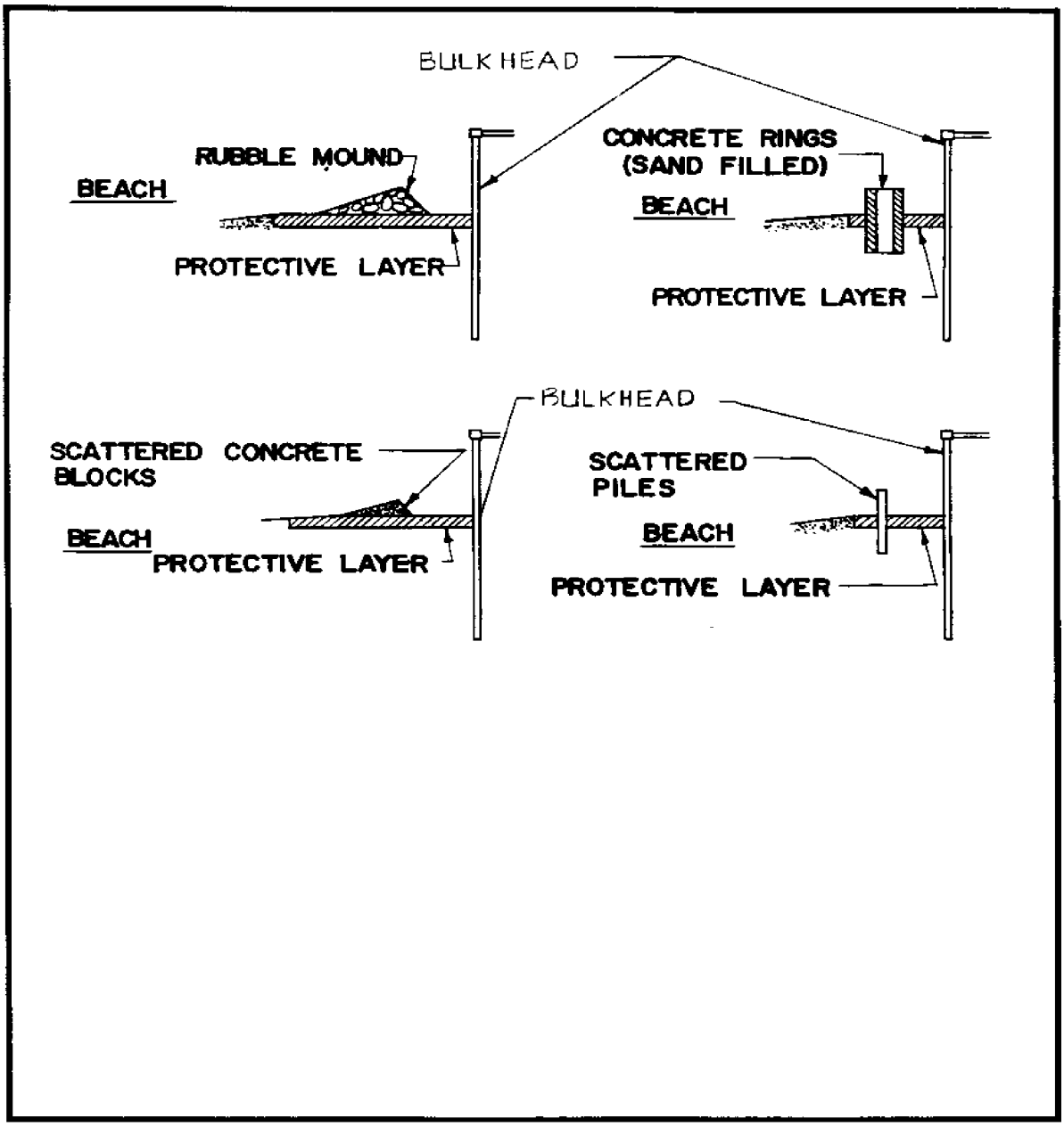

Figure 26
Methods of Reducing Wave Action on Bulkhead

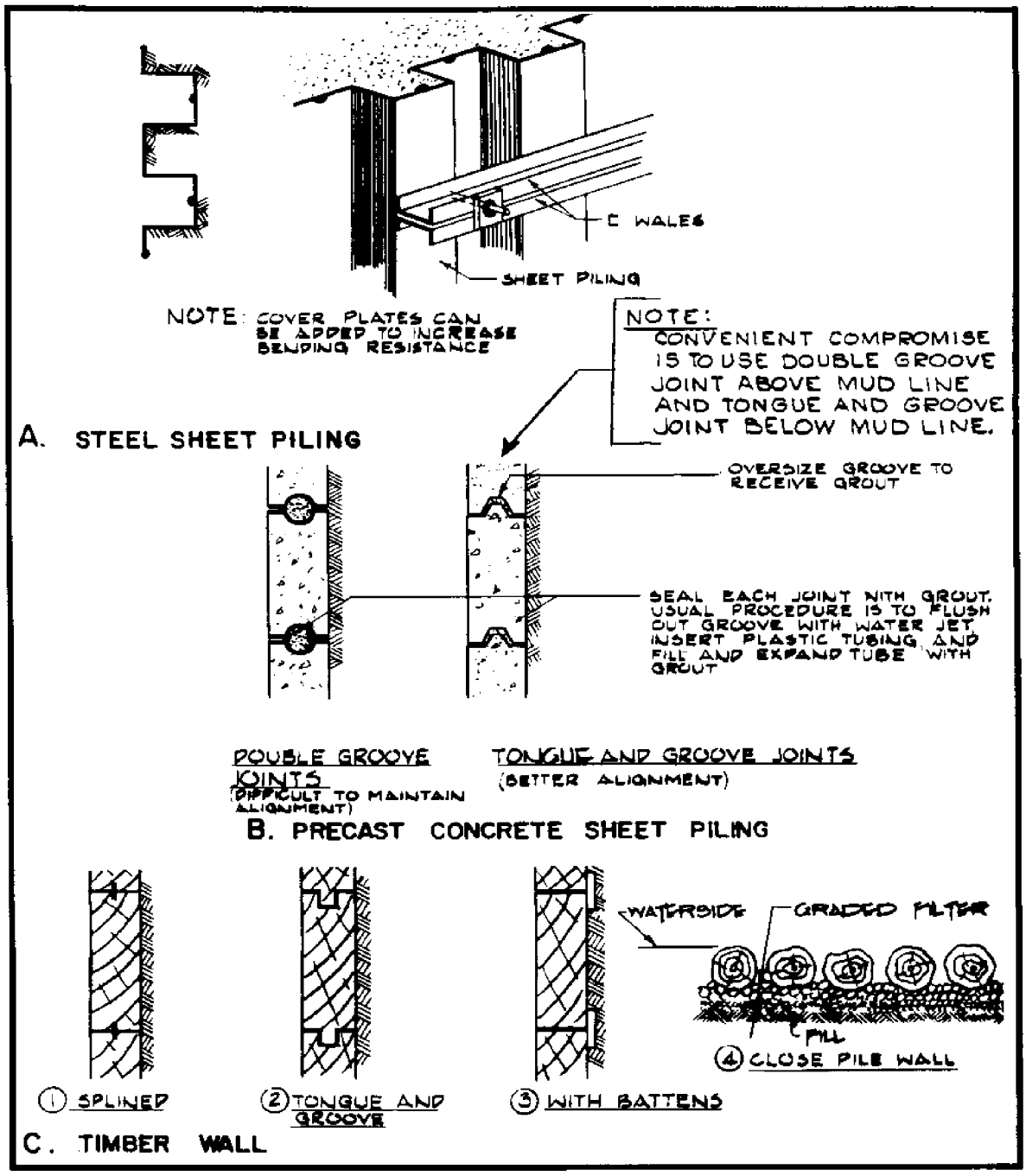

Figure 27
Types of Front Wall (Examples A thru C)

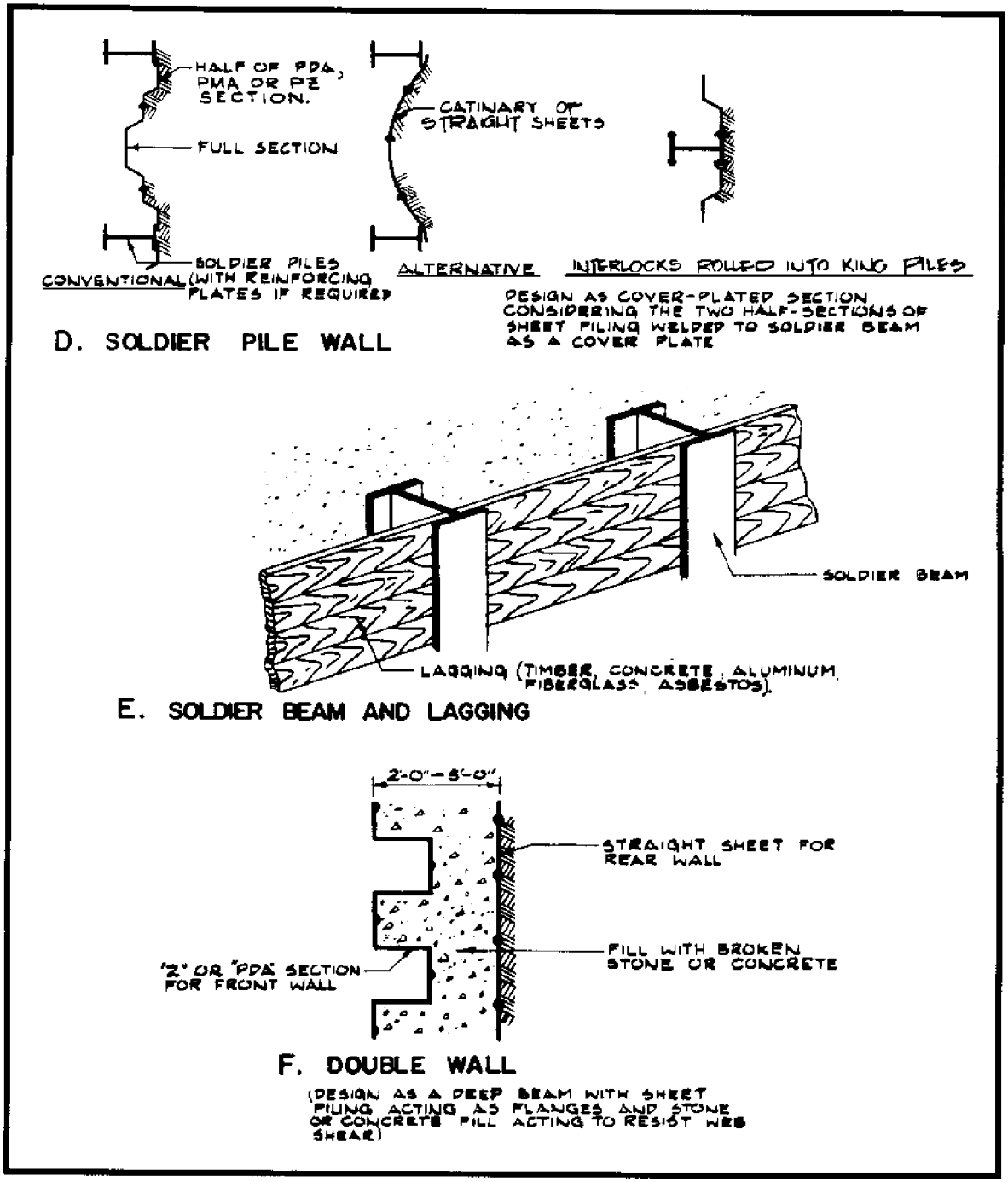

Figure 28
Types of Front Wall (Examples D thru F)

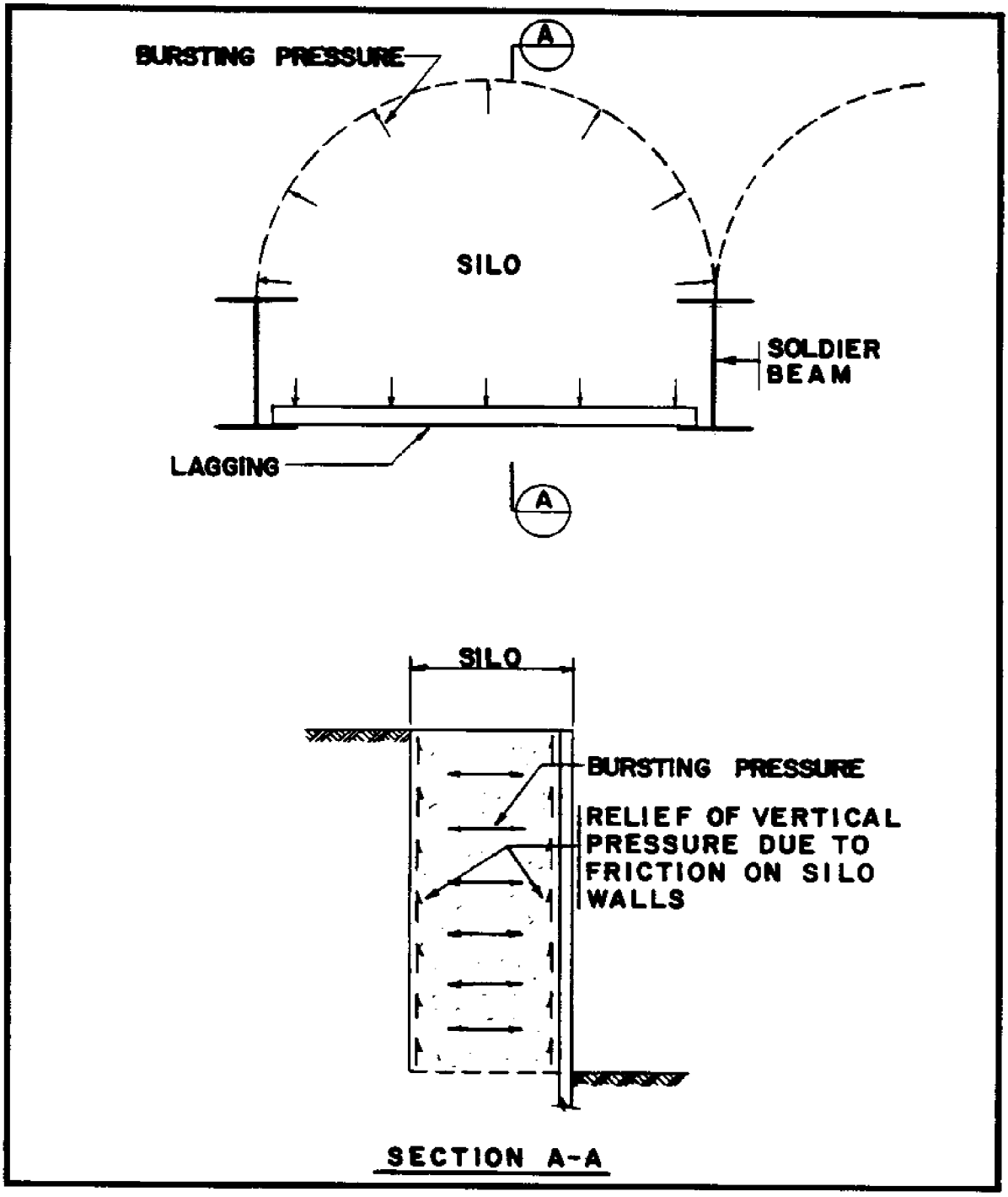

Figure 29
Silo Walls

Table 1
Recommended Thickness of Wood Lagging

Soil Description	Unified Classification	Depth	Recommended Thicknesses of Lagging (roughcut) for Clear Spans of: 5'	6'	7'	8'	9'	10'
COMPETENT SOILS								
Silts or fine sand and salt above water table.	ML SM-ML							
Sands and gravels (medium dense to dense).	GW, GP, GM, GC, SW, SP, SM	0' to 25'	2"	3"	3"	3"	4"	4"
Clays (stiff to very stiff); non-fissured.	CL, CH	25' to 60'	3"	3"	3"	4"	4"	5"
Clays, medium consistency and [gamma]H/S[mu] < 5.	CL, CH							
DIFFICULT SOILS								
Sands and silty sands, (loose).	SW, SP, SM							
Clayey sands (medium dense to dense) below water table.	SC	0' to 25'	3"	3"	3"	4"	4"	5"
Clays, heavily overconsolidated fissured.	CL, CH	25' to 60'	3"	3"	4"	4"	5"	5"
Cohesionless silt or fine sand and silt below water table.	ML; SM-ML							
POTENTIALLY DANGEROUS SOILS								
Soft Clays [gamma]H/S[mu] > 5.	CL, CH	0' to 15'	3"	3"	4"	5"	-	-
Slightly plastic silts below water table	ML	15' to 25'	3"	4"	5"	6"	-	-
Clayey sands (loose), below water table	SC	25' to 35'	4"	5"	6"	-	-	-

Note: In the category of "potentially dangerous soils," use of lagging is questionable.
From Lateral Support Systems and Underpinning, FHWA-RD-Report 75-128.

4.5.4 Close-Pile Wall. (See Figure 27, type C4.) This type of front wall construction once was common and still is economical where logs can be inexpensively obtained. The problem is that the logs (piles) do not fit well together and, despite the best efforts to seal the openings in the wall with various kinds of filters and sheathing, experience demonstrates that loss of backfill is a virtual certainty.

4.5.5 Double Wall. (See Figure 28, type F.) This variation of the soldier pile wall can develop great strength.

4.6 Materials for Front Wall Construction. Use of steel, concrete, and timber is common. General criteria for use in the design and detailing of such construction are presented in para 4.9, and MIL-HDBK-1025/6, General Criteria for Waterfront Construction. Other materials in occasional use include galvanized corrugated sheet metal, corrugated fiberglass, and corrugated aluminum.

4.6.1 Aluminum. Theoretically, aluminum should not be a durable sheeting material. Below the dredge line and on the filled face, the lack of oxygen should inhibit the formation of the usual protective oxide. However, the material reportedly has been used to construct thousands of feet of bulkhead. No special problems have been reported.

4.6.2 General. In general, experience with all of these materials is too limited to define their long-term durability. Under proper conditions, an adequate service life could be realized and their use may be considered. Design should be based on load factors as described in para. 4.9. The limited strength of available sections prevents their use as vertical sheeting in all but low walls. When used as lagging, they find application potential in medium and high walls as well.

4.7 Types of Anchorage. (See Figures 30, 31, and 32.)

4.8 Selection Factors - Type of Anchorage. Use simple concrete wall or sheet pile deadman wherever feasible. A pile supported anchorage, in general, is used only where it is necessary to provide support for the wall before the fill behind the wall can be built up to the anchor level. This occurs when the location is too close to the wall (see Figure 31, Detail No. 4). For usual criteria for locating anchorage, there is ample room to provide for simultaneous development of anchorage resistance with build-up of pressure on the front wall.

4.9 Allowable Stresses

4.9.1 Front Wall Materials. For vertical sheeting, use allowable stress = 1.2f, where f is allowable stress given in MIL-HDBK-1002/2 for Service Classification B, or alternatively, reduce overall load factor by 25 percent. Refer to para. 4.5.3. for lagging.

4.9.2 Tie Rods, Fittings, Connections, and Anchor Wall. Use allowable stress = 0.75f, where f is allowable stress given in MIL-HDBK-1002/2 for Service Classification B, or alternatively, increase overall load factor by 33 percent.

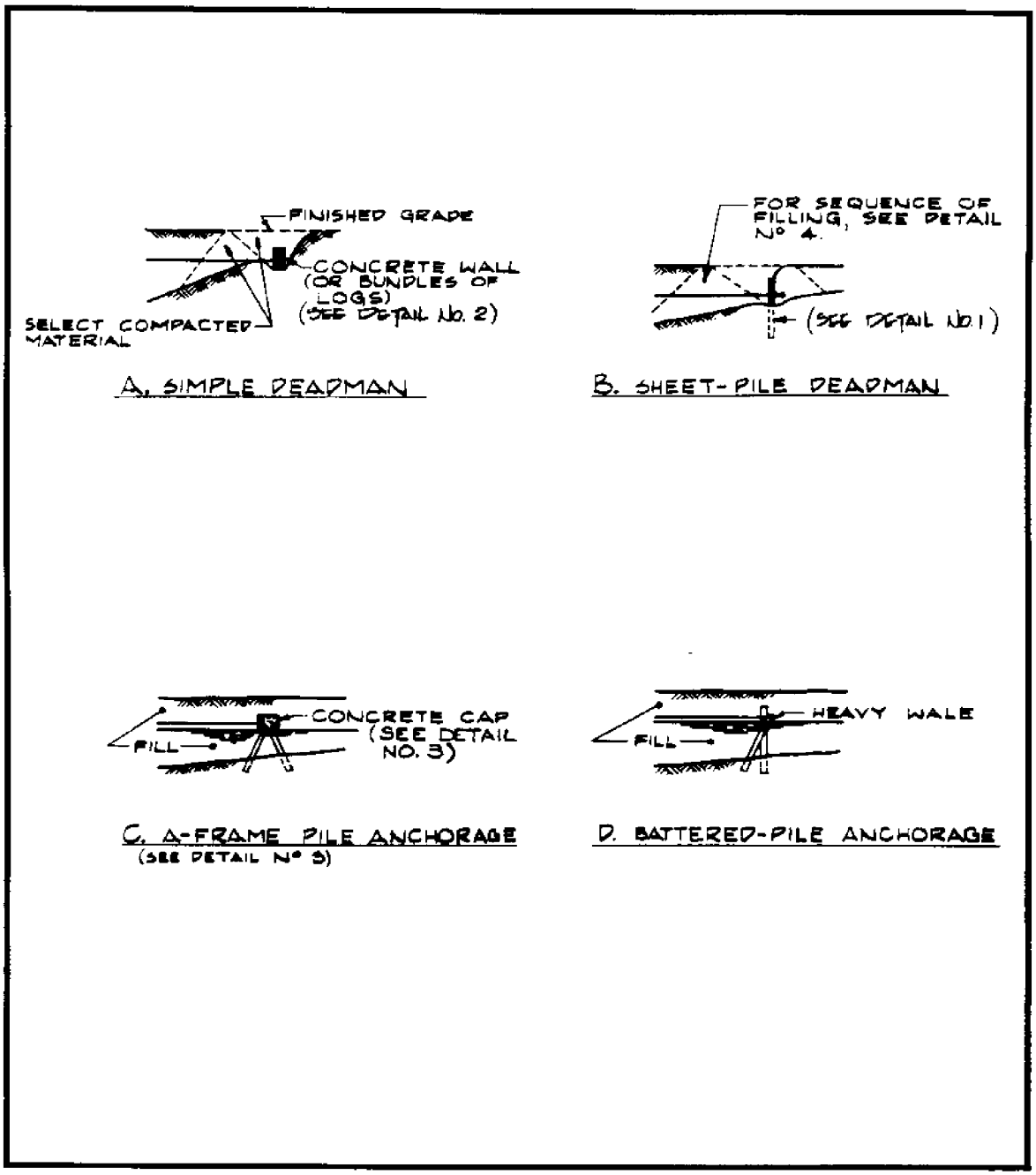

Figure 30
Types of Anchorage (Examples A thru D)

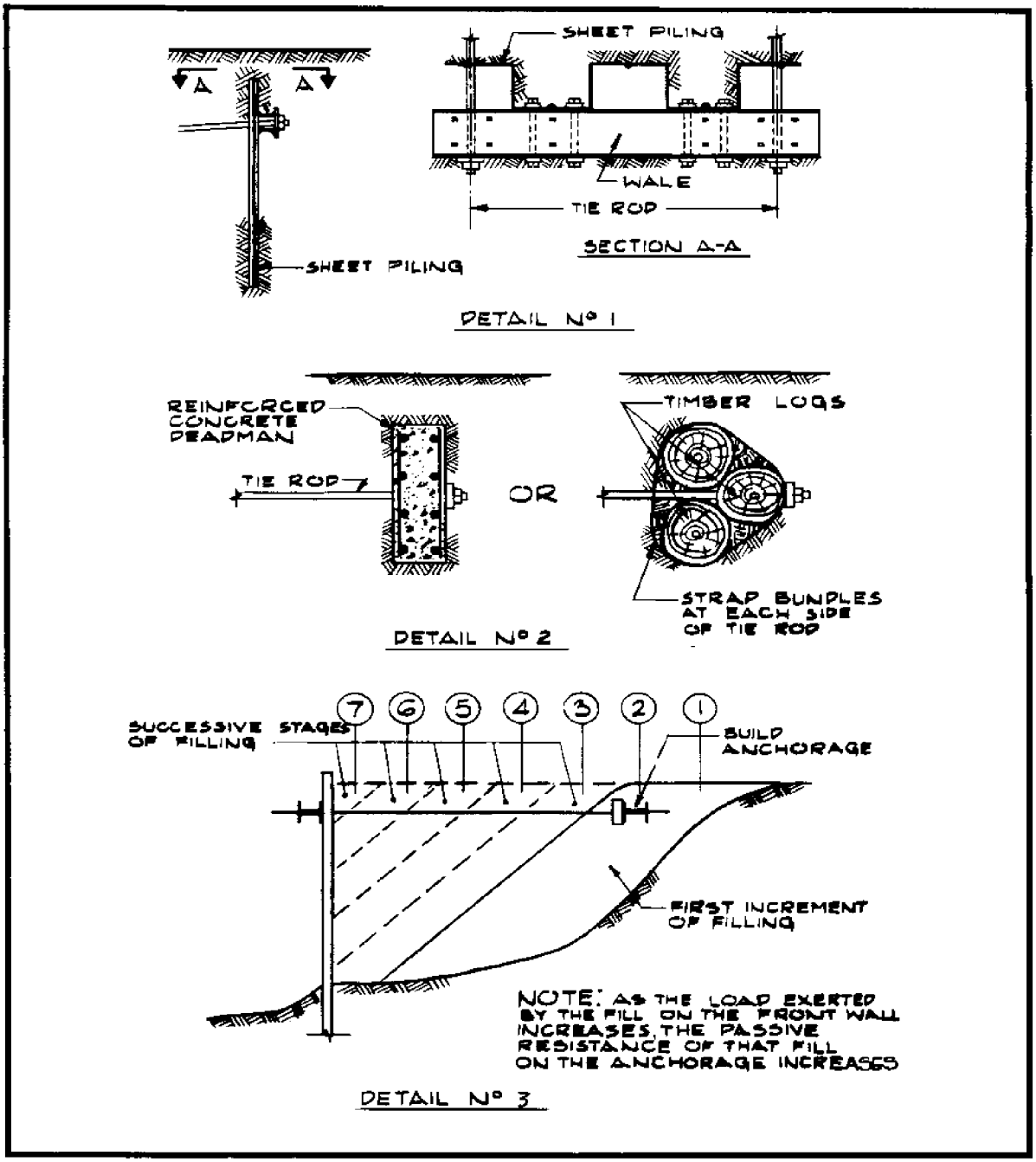

Figure 31
Types of Anchorage (Details 1 thru 3)

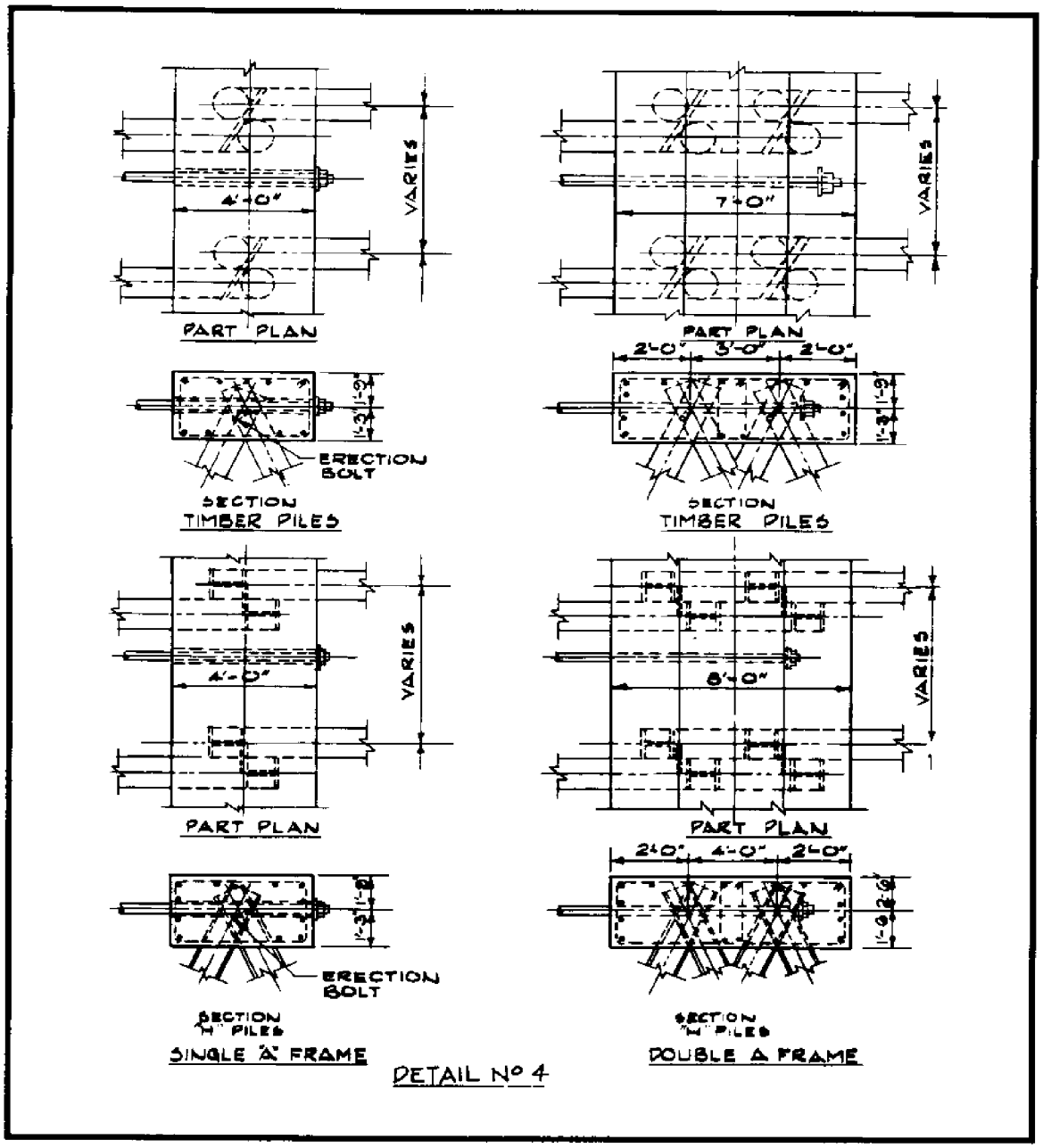

Figure 32
Types of Anchorage (Detail 4)

Numerous examples of failures of the components of a bulkhead anchor system and of failure due to displacement of the toes of the sheet piles have been reported. No instances of failure due to flexure of the sheeting are known to the authors. In general, it appears that if a bulkhead has ample embedment of the toe and a reserve of strength in the anchorage, it can tolerate substantial deterioration and overstress in the sheeting. Therefore, the toe embedment of the wall and the design of the anchorage should provide a load (safety) factor of 2.0.

4.9.3 Deck Framing. Deck framing, track beams, or other members which function as direct supports for crane, railway, or truck loading shall be designed for Service Classification A. Other elements of support, wherein the impact effect is dissipated into a mass of soil (buried portions of piling, for example), shall be designed for Service Classification B criteria.

4.9.4 Vertical Load on Sheet Piling. (Refer to MIL-HDBK-1025/6.)

4.9.5 Construction Conditions. Allowable stresses under temporary construction loads shall be 20 percent greater than the values indicated above.

4.10 Applicable Method of Design. The various common methods (theories) of the design of bulkheads differ in how they estimate the level of the lower point of inflection in the front wall (see Figure 33). For example, in the free-earth support method no lower point of inflection is assumed. In the fixed-earth support method (and the several empirical variations thereof), a lower point of inflection is assumed to occur at various levels at, and below, the level of the mudline in front of the wall. In a specific case, these different methods can yield vastly different results (see Figure 34).

The following text suggests the limits within which each method is applicable, and it is intended to apply where the factor of safety against displacement of the toe of the wall is 2.0. If greater embedment is provided, a lower inflection point may develop even for cases where the free-earth method normally would be applicable. The free-earth support method is the most conservative and may be followed in cases of doubt. For details of these methods, reference is made to DM-7.02 on the design of earth-retaining structures. It is not intended that the discussion of these methods preclude recourse to other design procedures such as Danish Rules where applicable, or to any rational method of design which considers arching and creep effects.

4.10.1 Toe of Wall Embedded in Soft to Medium Fine Grained Soil. Use the free-earth support method.

4.10.2 Toe of Wall Embedded in Loose Sand - Sand Behind Wall. For dredged wall use free-earth support method with moment reduction for flexibility. For backfilled wall, use free-earth support method without moment reductions.

4.10.3 Toe of Wall Embedded in Medium to Compact Coarse Grained Soil. For steel or timber wall, assume hinge at the dredge line. For the case where medium to compact material is overlaid by shallow depth of soft or loose material, assume hinge at top of medium to compact material. For a concrete wall, use the free-earth support method.

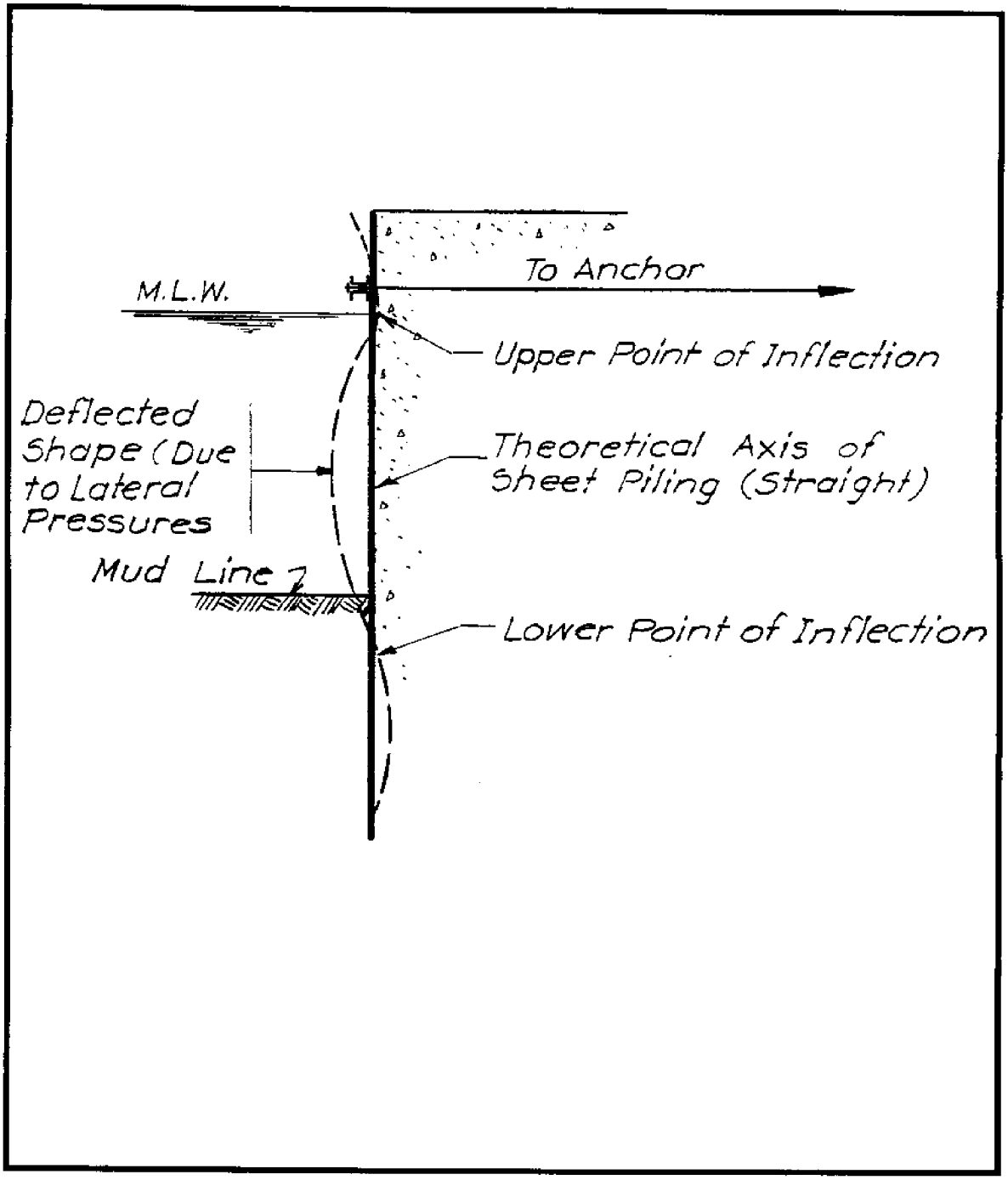

Figure 33
Deflection Curve for Bulkhead Sheeting

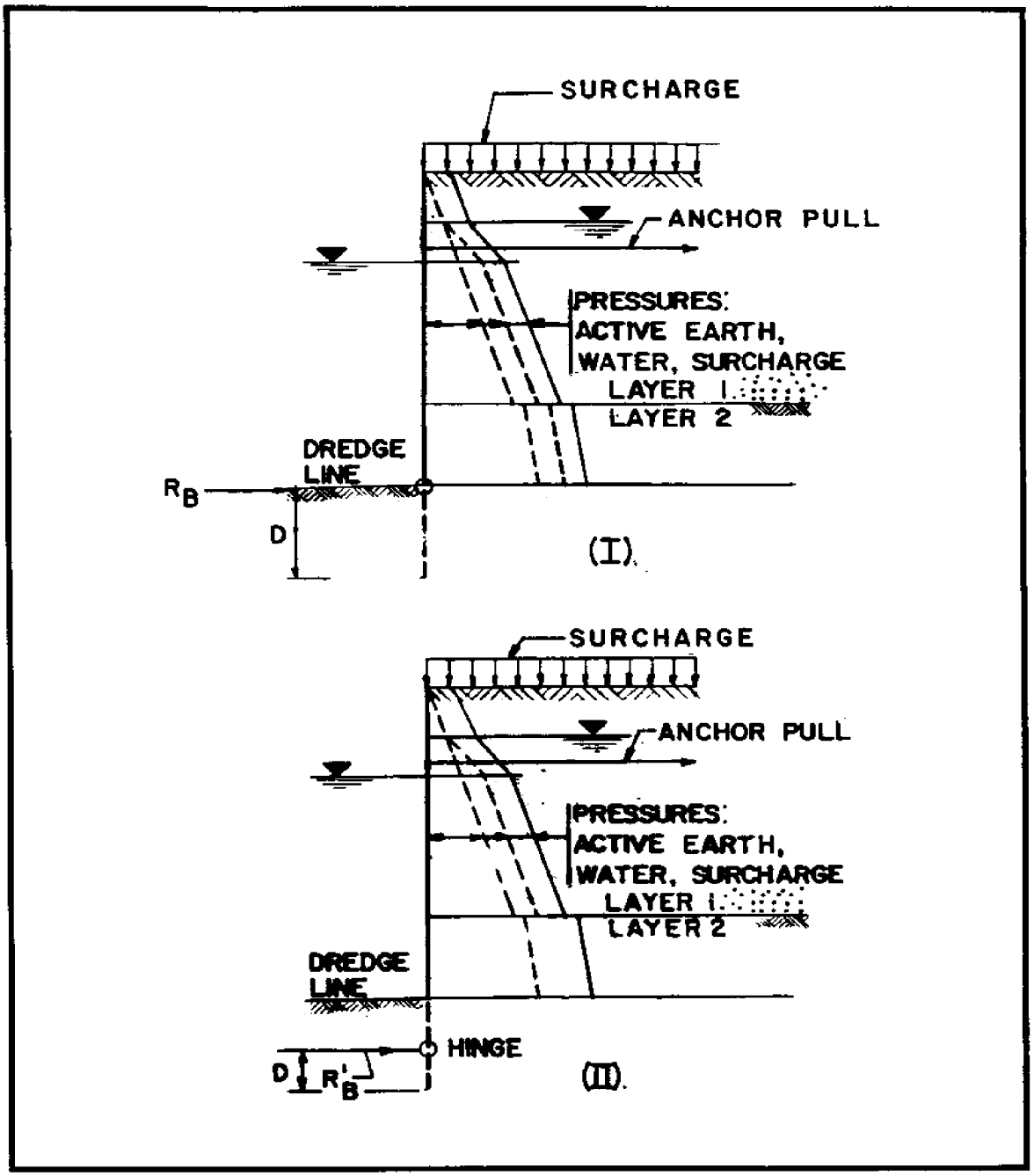

Figure 34
Penetration in Stiff, Nonsensitive Fine-Grained Soil

4.10.4 Toe of Wall Embedded in Stiff, Nonsensitive Fine Grained Soil. Locate hinge (by trial and error) so that the value of:

Equation: $\frac{C \times D}{R'+B,}$ or $\frac{C \times D}{R+B,} > 4.7$ (1)

Where: C = Shear strength of the soil below drainage level.
D = Depth below hinge.
R+b, = or R'+B, = Reaction at hinge.

This method is limited to cases where the vertical effective pressure at the dredge line is less than 2C (see Figure 34).

4.11 Detailed Design Considerations. General details of design shall conform to the requirements of MIL-HDBK-1025/6.

4.11.1 Deadmen and Sheet Pile Anchors. Design according to the requirements of DM-7.02.

4.11.2 Pile Supported Anchors. Design shall conform to the requirements of DM-7.02.

4.11.3 Wales. Wales should be located at a level which minimizes the moment in the sheet piling. Usually, this means as low a level as is economical. Generally, the wales are set at mean low water, as a compromise between the cost of installing the anchor system and the cost of (moment in) the sheet piling.

An advantage of setting the wales near mean low water is that the tie rods are in permanently saturated ground. This reduces the corrosion rate in the portions of the tie rods behind the wall. However, the wales, the projecting end of the tie rods and the bolts, plates, and washers on the outside face of the wall are in a zone of active corrosion and should be sized generously.

Wales may be set at lower levels where required, but levels more than 2 ft (0.61 m) below mean low water require installation by divers. (Refer to Section 4, para. 4.3.2.

4.11.4 Tie Rods. Threaded portions of tie rods should be upset.

Tie rods and appurtenances shall be protected against corrosion in accordance with the requirements of NAVFAC Guide Specification NFGS-09809, Protection of Buried Steel Piping and Steel Bulkhead Tie Rods. If this is done, experience suggests that cathodic protection is not required unless special circumstances of chemical activity or stray current exist. Deterioration of the tie rods is concentrated in the 3- to 5-ft (0.914 to 1.52 m) section adjacent to the bulkhead, and special protection should be provided in that location. In general, do not use wire rope for tie rods.

Where tie rods are long, vertical intermediate supports shall be provided at maximum 30-ft (9.14 m) centers to prevent sagging. Consider use of a box over the tie rod to avoid loading the rod as the subsoil consolidates.

4.11.5 Protection Against Impact of Berthing Vessels. Where berthing is to be provided at a bulkhead, wales should be located on the inboard face of the piling. If located on the outboard face, exercise special care to assure protection against damage due to collision. If vessels with protruding propeller guards or stern planes (such as submarines) are to be berthed against a bulkhead, they must be fended off by camels or by a projecting cap, or other means so that the protuberances do not contact the front wall.

4.11.6 Wall Movements. Some wall movement after construction should be anticipated. Accommodations for these movements should be made. In general, wall movement is small and occurs shortly after completion of construction. In the case of a cantilever wall, movements will be progressive and may for several years (refer to para. 4.2.1).

4.11.7 Scour at Toe. Consider possible removal of material at toe of wall by propeller swash or scour.

4.11.8 Future Dredging. A bulkhead design is sensitive to increase in the height of the exposed face. Possible future dredging requirements must be carefully considered as it is difficult to strengthen a bulkhead once it has been built.

4.11.9 Drainage of Backfill. Where the tidal range exceeds 4 ft (1.22 m), provide a blanket of drainage fill behind bulkhead sheeting, 2 in. (0.51 mm) weep holes for every other sheet, or about 30 in. (9.62 mm) spacing, and graded filter material behind each weep hole.

4.12 Construction Procedures

a) Where removal of soft material is contemplated, dredging should precede the driving of sheet piling.

b) Where existing material behind the bulkhead is to remain in place, it is advisable to dredge in front of the bulkhead after completion of the structure. This emphasizes arching in the material behind the wall and reduces bending stresses. Dredging adjacent to sheet piling after completion should be done in two or three vertical stages to avoid rapid changes and load differentials.

c) Fill behind wall in areas of broad extent do that the concentration of lateral pressure does not cause differential alignment along the length of the wall.

d) Consider compaction pressure due to the driving of support piles (relieving platform or track supports) behind the front wall. If dredging in front of the wall is done after the piles are driven, deflection of the wall will tend to relieve these pressures. Specify the driving sequence for such piles in order to avoid a progressive increase of the wedging effect.

e) Tie rods shall be pretensioned as uniformly as is practicable. It is emphasized, however, that uniform load in the tie rods is an unlikely occurrence. The provisions relating to allowable stresses in the anchor system are intended to provide for this situation. The implications are more general, however. The anchor system must be able to deform inelastically.

Concrete wales and anchor walls should be reinforced on both faces and not simply in accordance with the theoretical moment diagram. The use of high steel in tie rods should be approached with caution to assure that the steel is capable of several percent elongation without fracture.

f) Where the anchorage depends on passive earth pressure, place and compact backfill around anchorage before filling against the bulkhead.

g) In the filling of a relieving platform-type structure, the area at the back end of the platform should be filled to deck level, the deck placed over the batter piles, and filling continued to grade. This will provide load on the batter piles to assist in resisting the tension which will be caused by the tension in the tie rod. The deck area adjacent to the sheets may then be placed and fill completed.

h) When placing hydraulic fill, the discharge line should be located on or in front of the anchorage line. Drainage openings should be provided in sheet piles at about 100 ft (30.5 m) intervals.

4.13 Appurtenances. Fender system, fittings, utility services, aids to navigation, and other appurtenances shall be provided. References in this handbook list applicable sources.

Section 5: QUAYWALLS

5.1 Types of Construction. General types of construction are shown schematically in Figures 35, 36, 37, and 38. Examples of actual construction are shown in Figures 39, 40, 41, 42, 43, 44, 45, 46, and 47.

5.2 Selection Factors

5.2.1 Water Depth. Theoretically, there is no upper limit to the depth of water in which a gravity structure can be constructed except that the height of a sheet pile cellular structure is limited by the tensile strength of the sheets and of the interlocks (bursting strength). However, with modern high strength materials, high capacity interlocks, and using a clover leaf form, depths greater than 50 ft (15.2 m)can be accommodated.

5.2.2 Maintenance. Steel sheet piling is subject to corrosion. Reinforced concrete may develop corrosion of the reinforcement. Timber is subject to attack by borers. Concrete is subject to sulphate and other forms of chemical attack. Masonry structures require repointing of joints. In general, however, concrete and masonry require the least maintenance.

5.2.3 General. Assuming adequate protection of timber (cribs) against borer attack, the factors cited above (water depth and maintenance) are minor. Selection is based on minimum first cost, with life-cycle cost an additional consideration when the use of steel sheet piling is contemplated.

5.2.4 Special Considerations Relative to Filled, Cellular Construction

5.2.4.1 Cohesive Soils. Generally a filled, cellular structure is a poor selection if the fill in cells must consist of soft, cohesive soil. The reason is that high bursting pressures are developed. A second case is where the sheets are driven through soft, cohesive soils. If such soils are not removed from inside the cell, again a high bursting pressure is developed, but if said soil is removed from inside the cells, an inward pressure is developed which is likely to require a heavy internal bracing system.

5.2.4.2 Hard or Boundary Soils. Generally a filled, cellular structure is a poor selection if sheets must penetrate hard or bouldery soils in order to reach required tip elevations, resulting in a tendency for sheets to drive out of interlock or to tear.

5.3 Detailed Design Considerations

5.3.1 General Requirements. (Refer to MIL-HDBK-1025/6.)

5.3.2 Structural Design Criteria. Deck framing, track beams, or other members which function as direct supports for crane, railway, or truck loading shall be designed for Service Classification A. Other elements of support wherein the impact effect is dissipated into a mass of soil (buried portions of piling, for example), shall be designed for Service Classification B criteria.

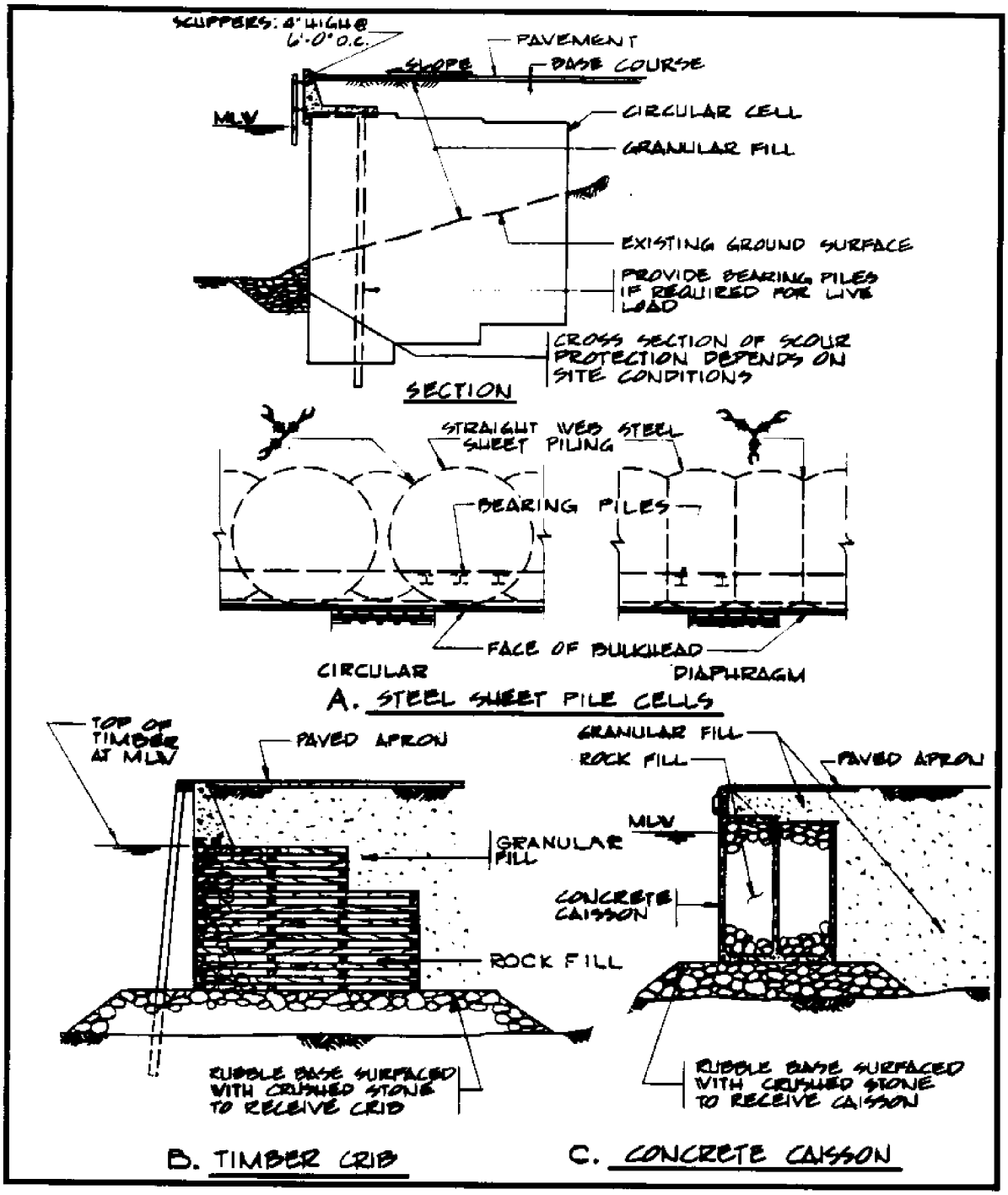

Figure 35
Types of Quaywalls (Examples A thru C)

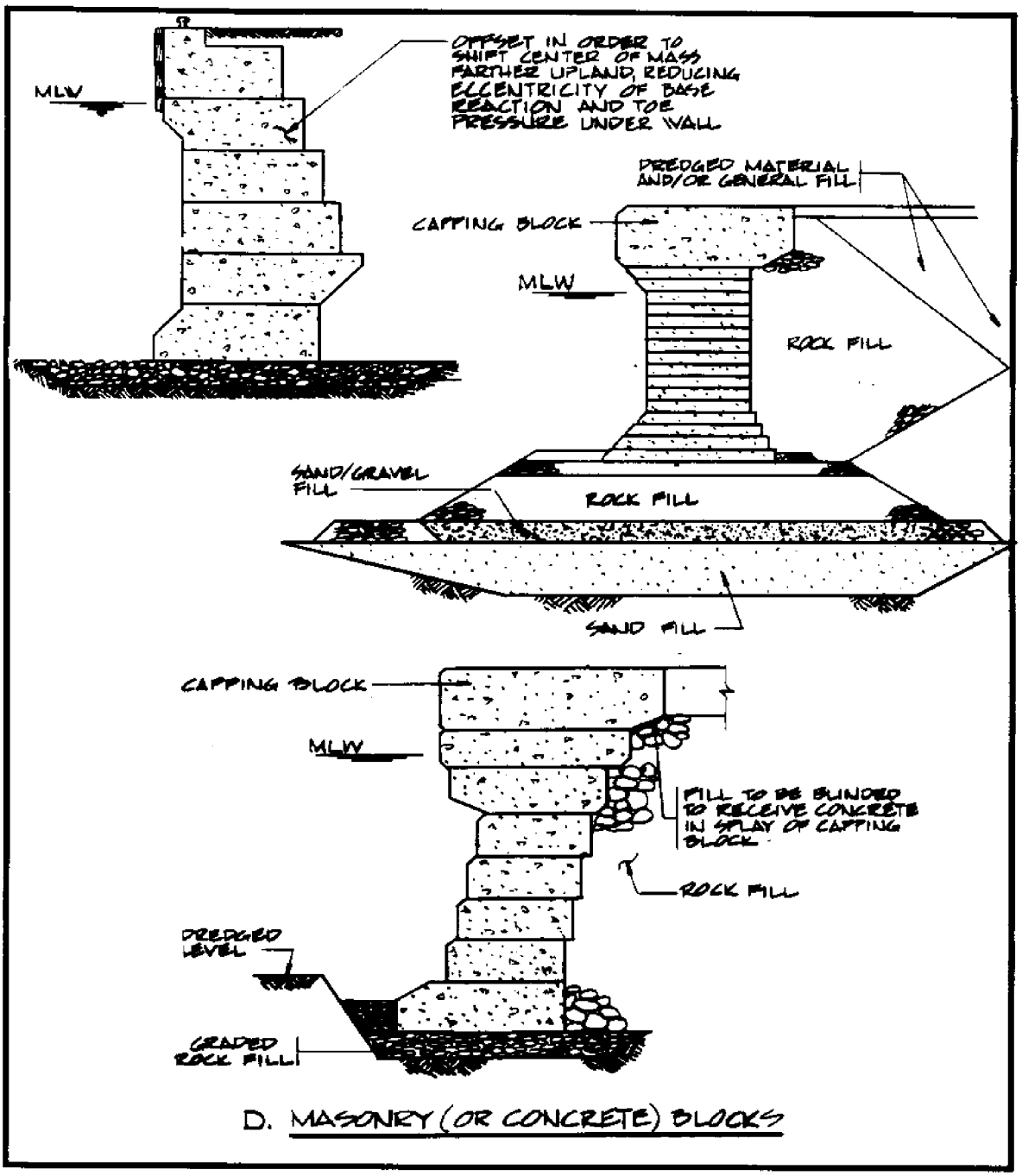

Figure 36
Types of Quaywalls (Example D)

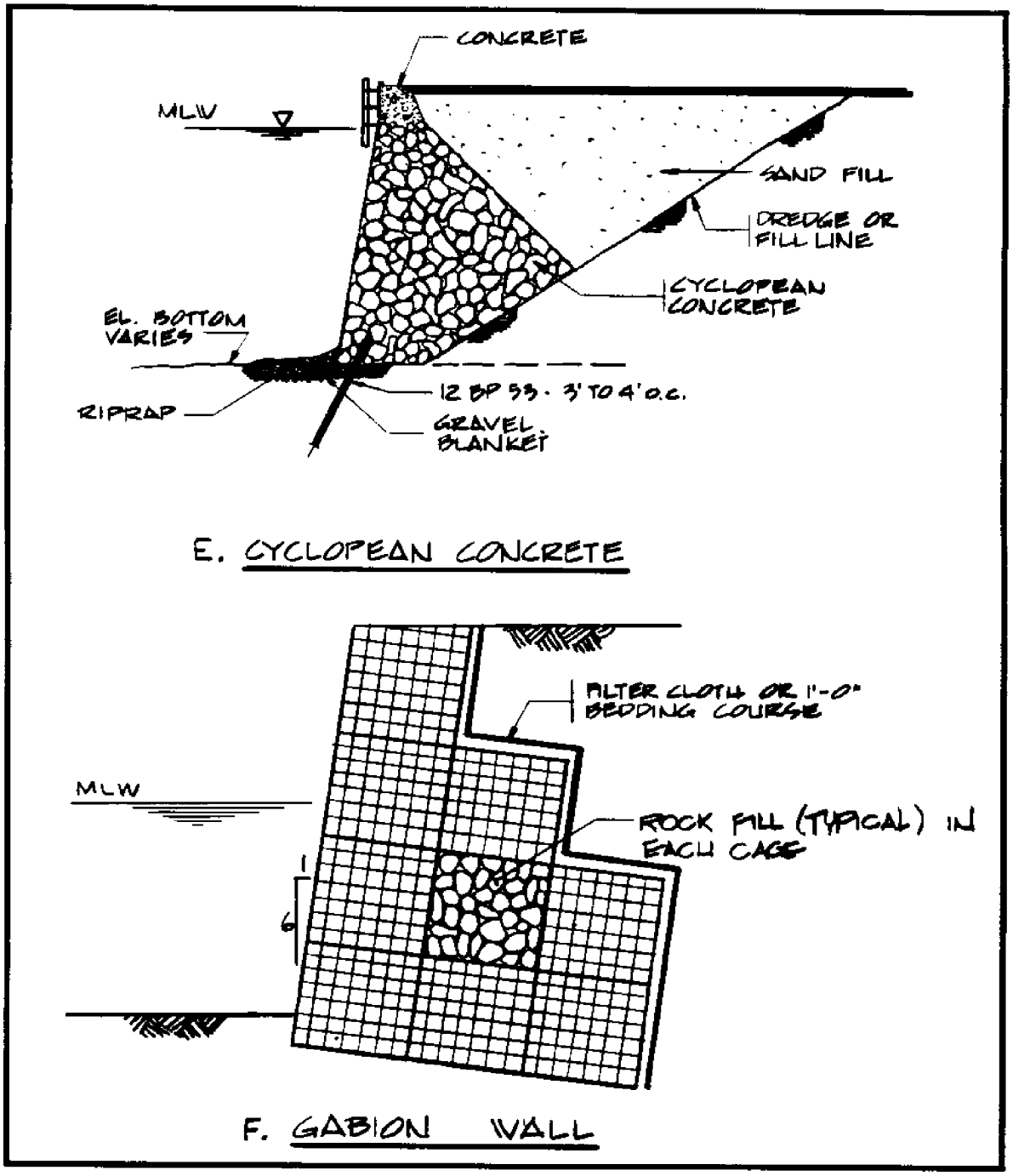

Figure 37
Types of Quaywalls (Examples E and F)

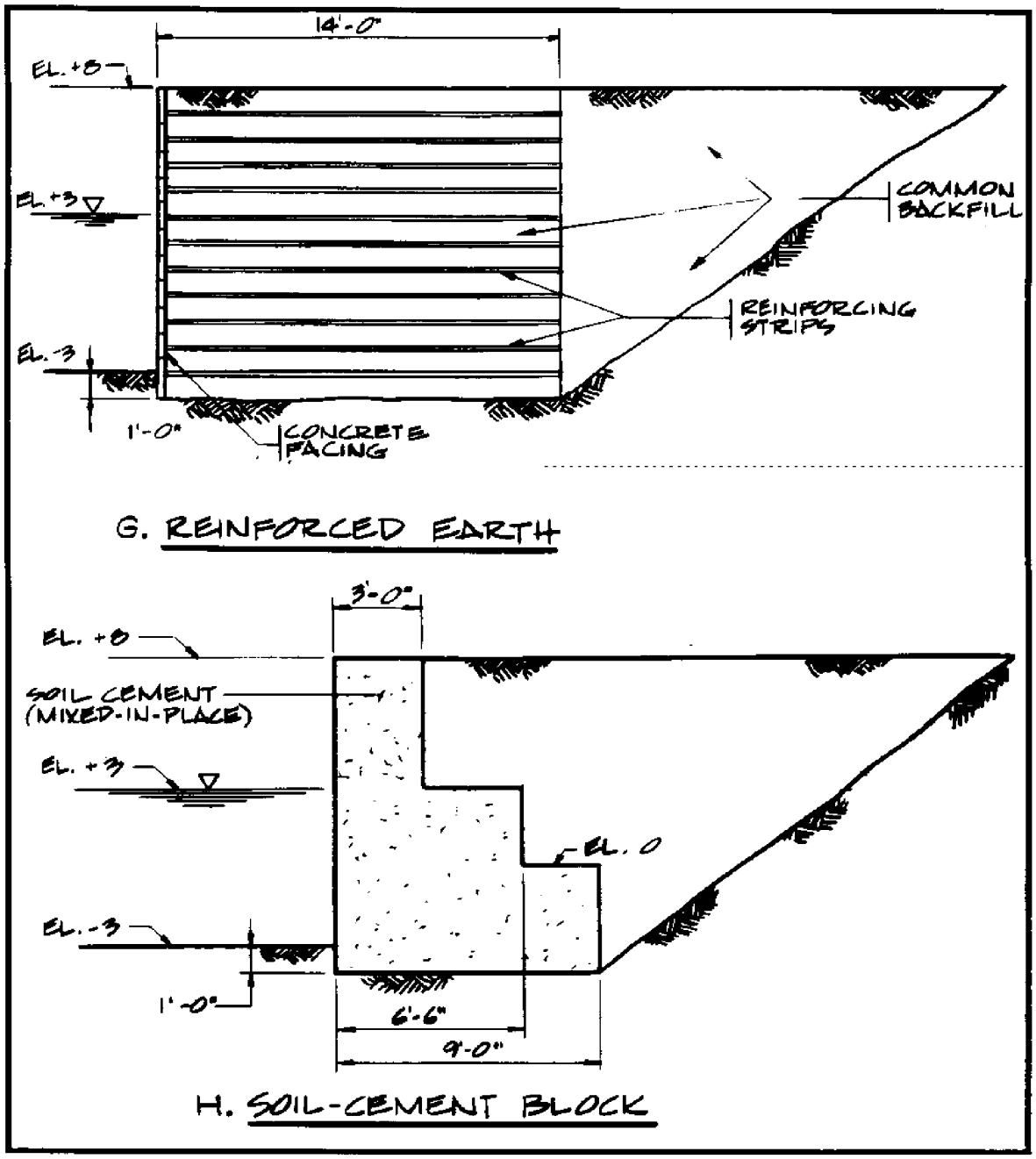

Figure 38
Types of Quaywalls (Examples G and H)

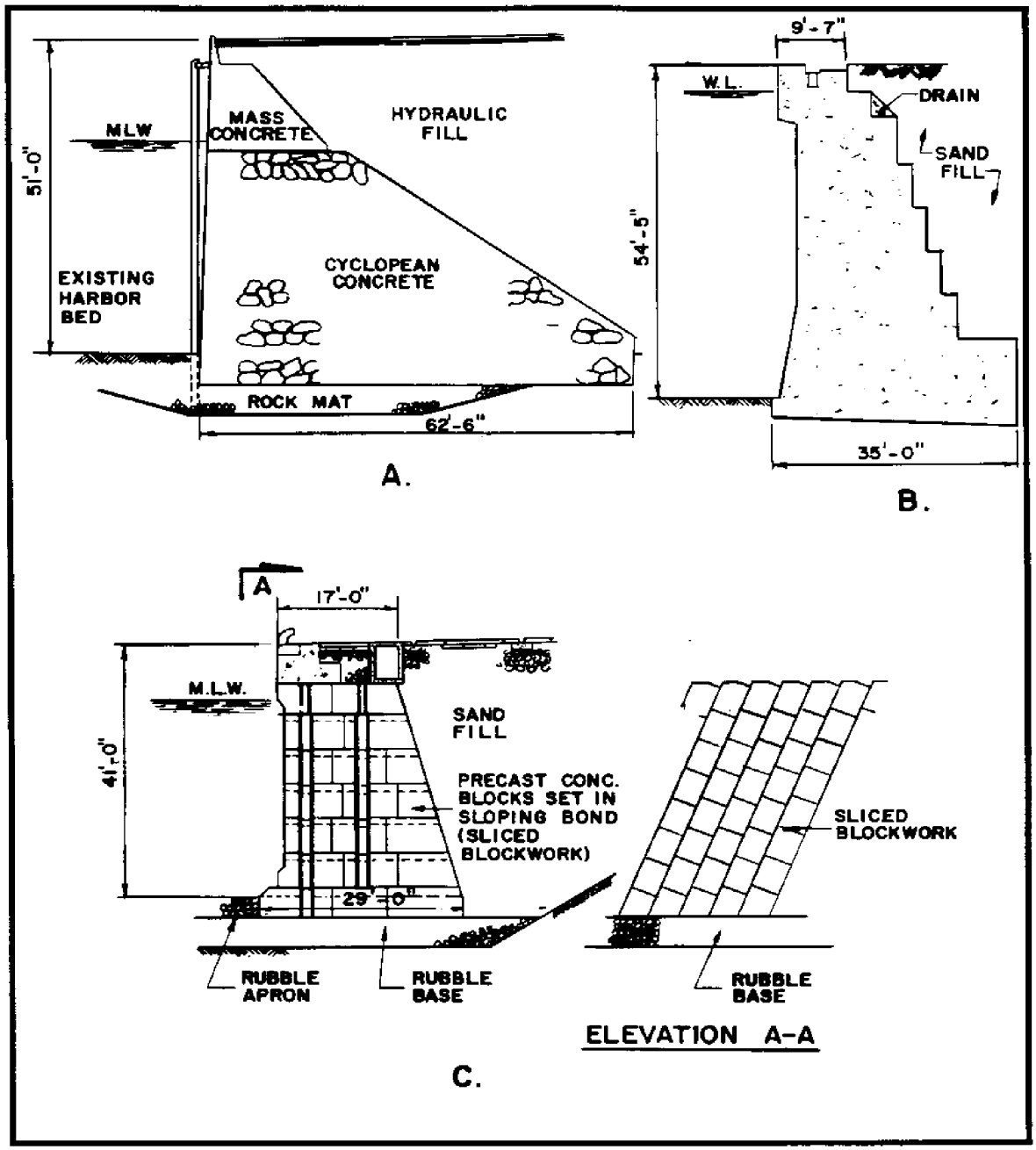

Figure 39
Quaywalls - Actual Constructions (Examples A thru C)

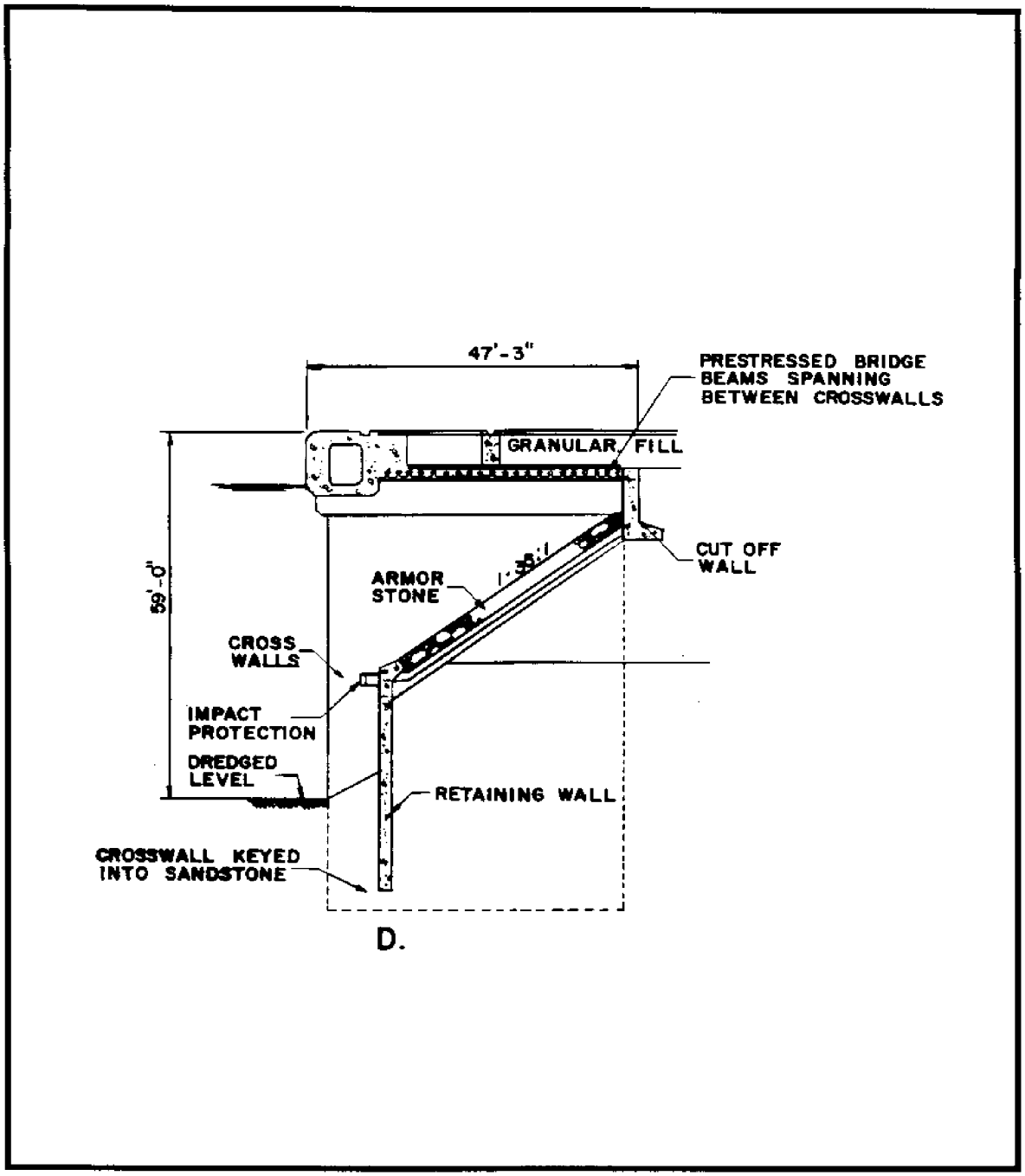

Figure 40
Quaywalls - Actual Constructions (Example D)

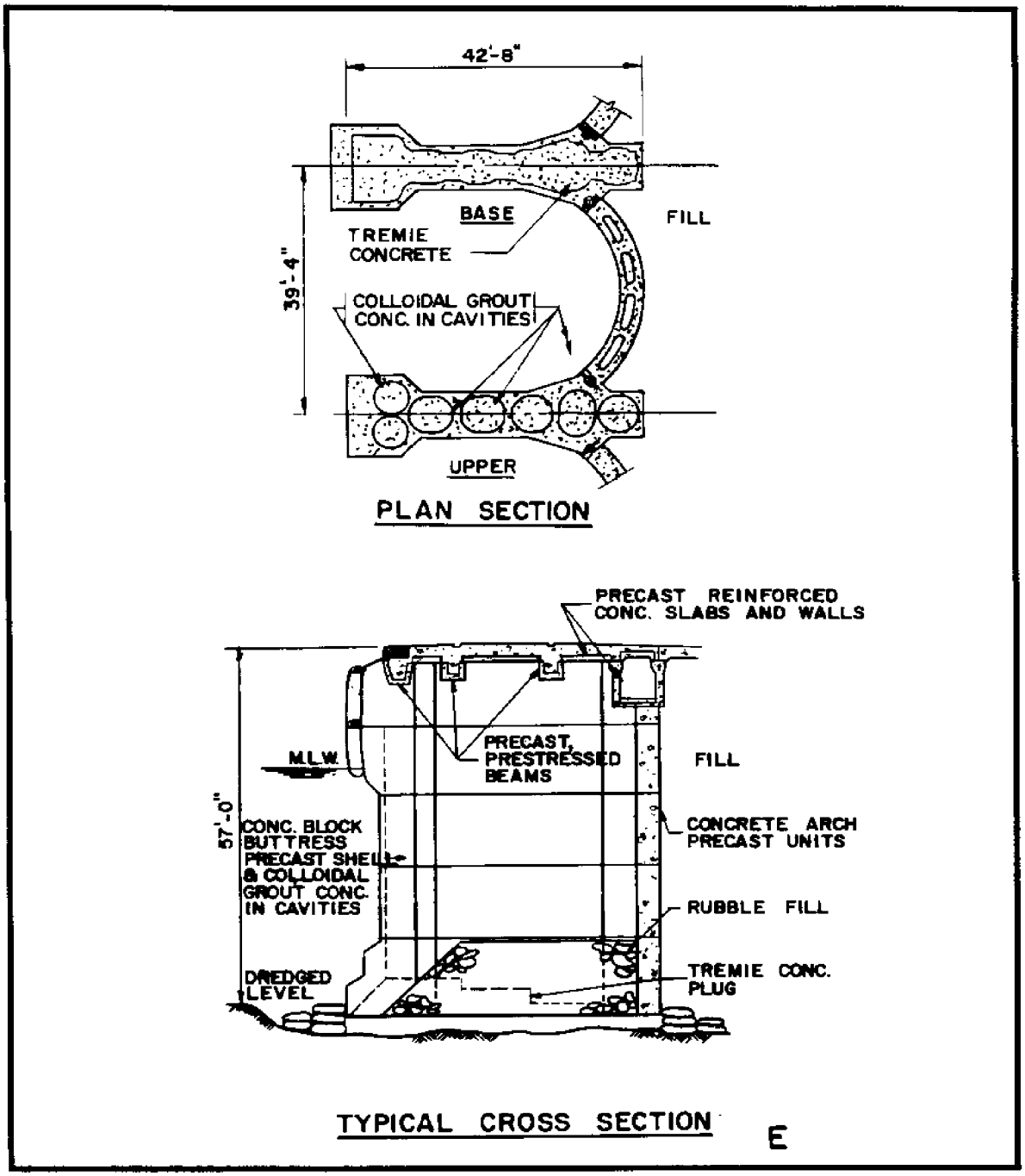

Figure 41
Quaywalls - Actual Constructions (Example E)

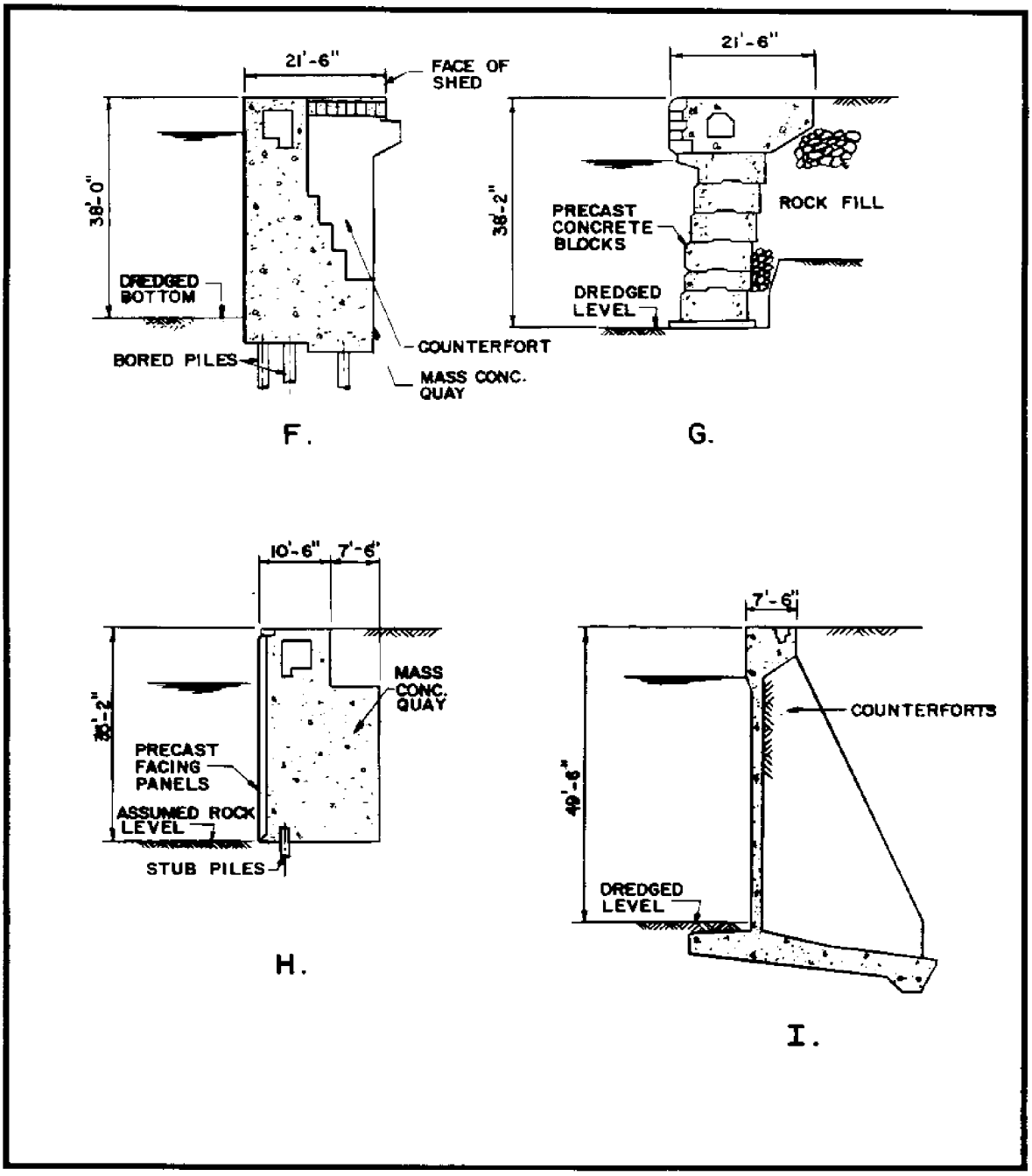

Figure 42
Quaywalls - Actual Constructions (Examples F thru I)

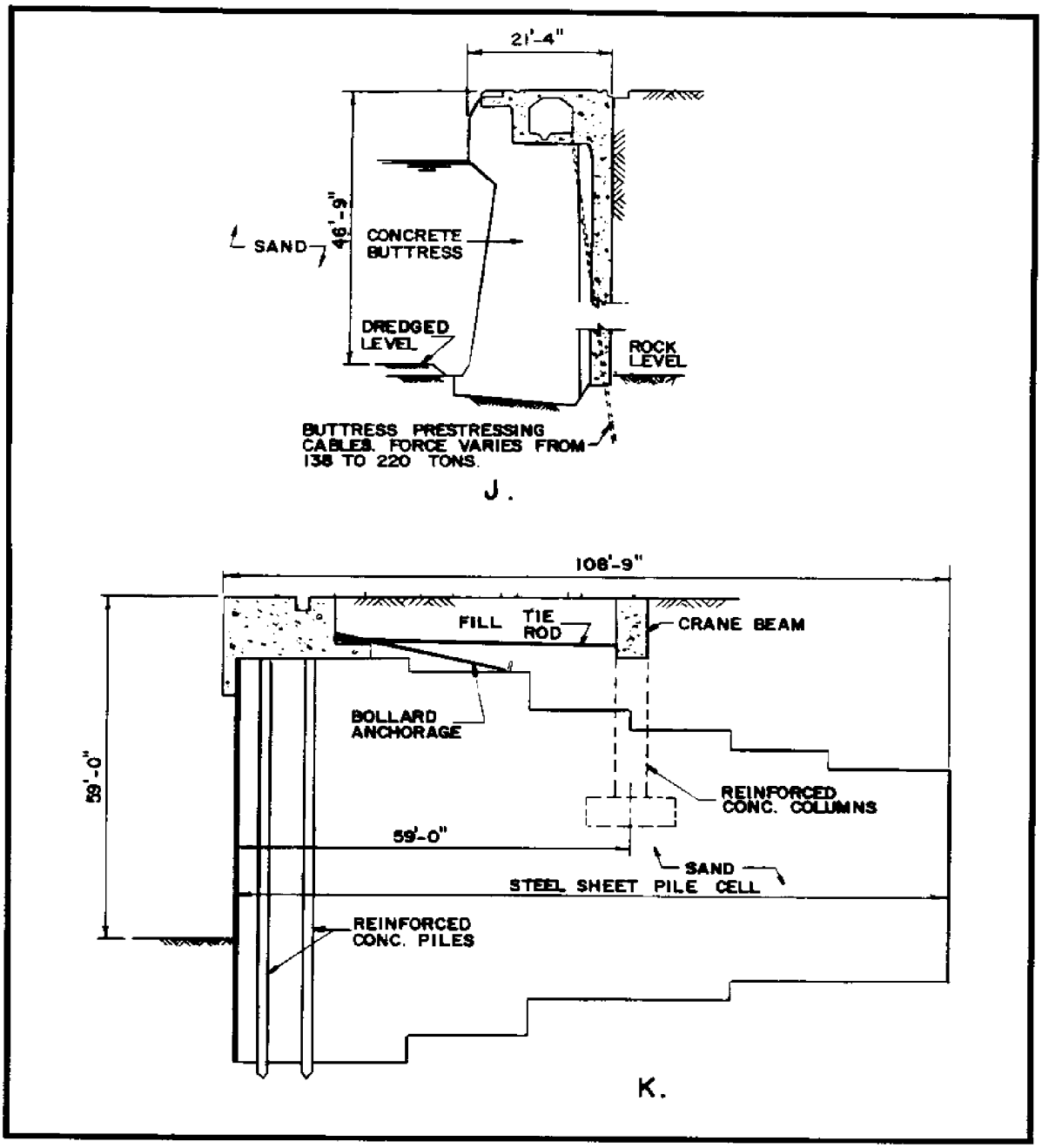

Figure 43
Quaywalls - Actual Constructions (Examples J and K)

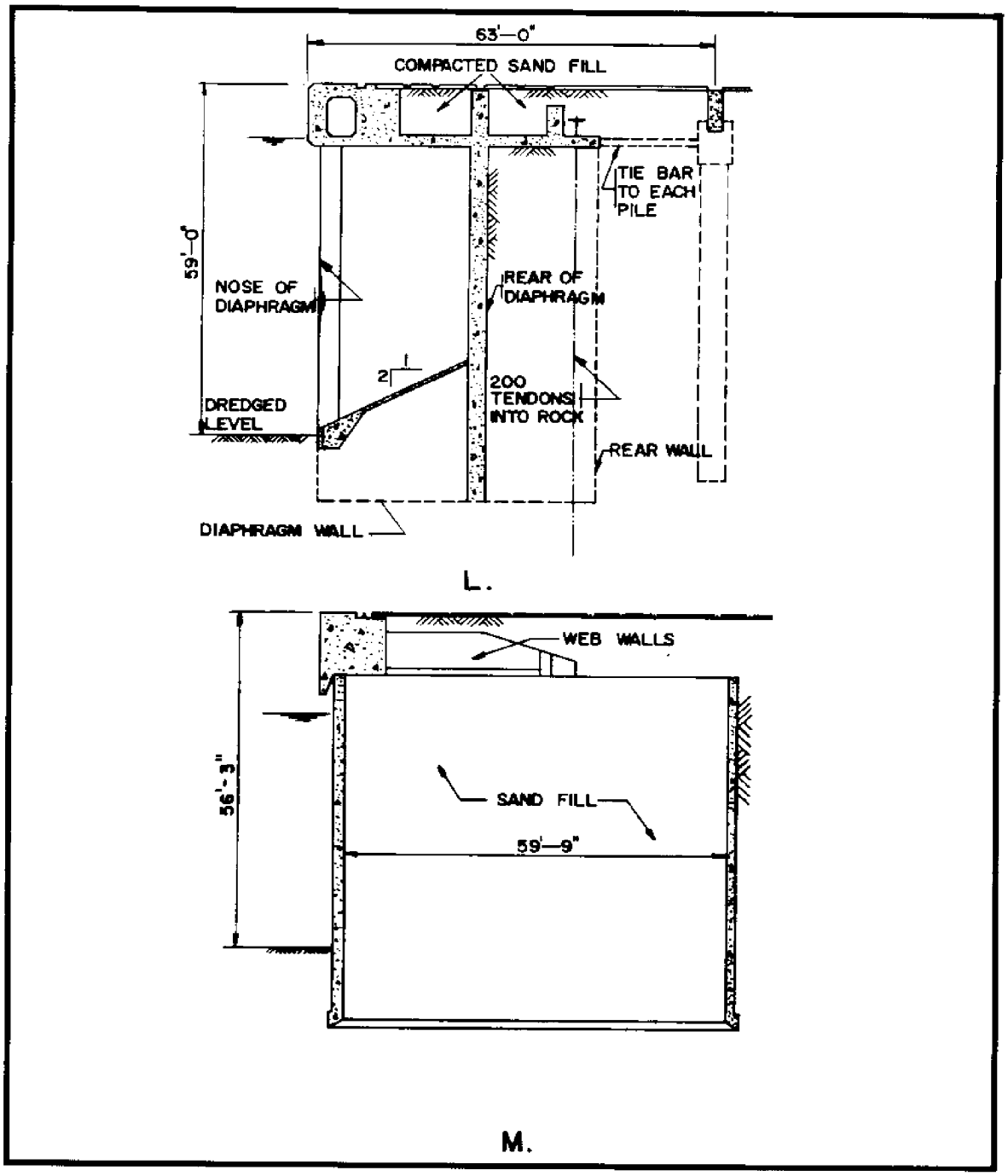

Figure 44
lls - Actual Constructions (Examples L and M)

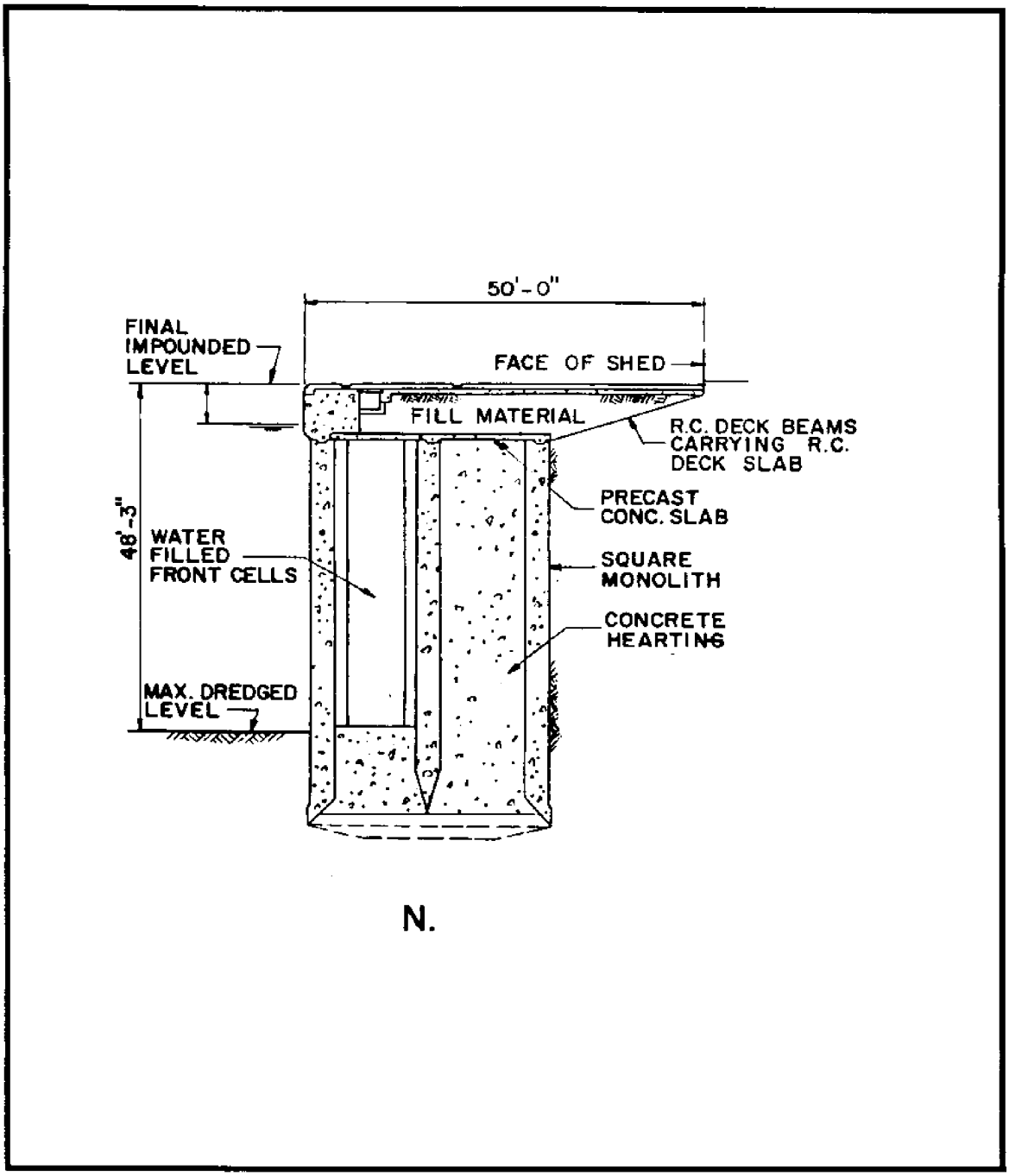

Figure 45
Quaywalls - Actual Constructions (Example N)

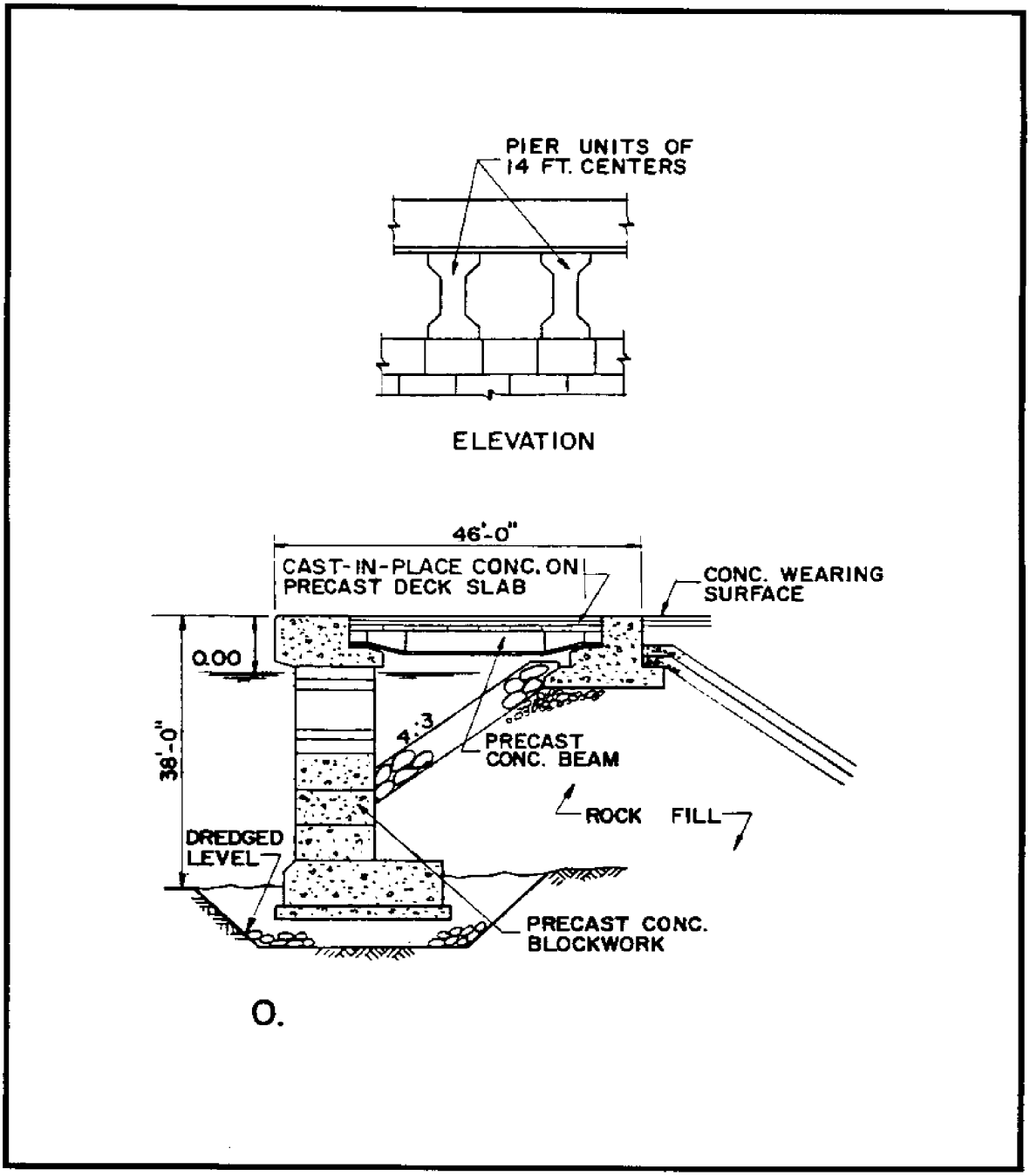

Figure 46
Quaywalls - Actual Constructions (Example O)

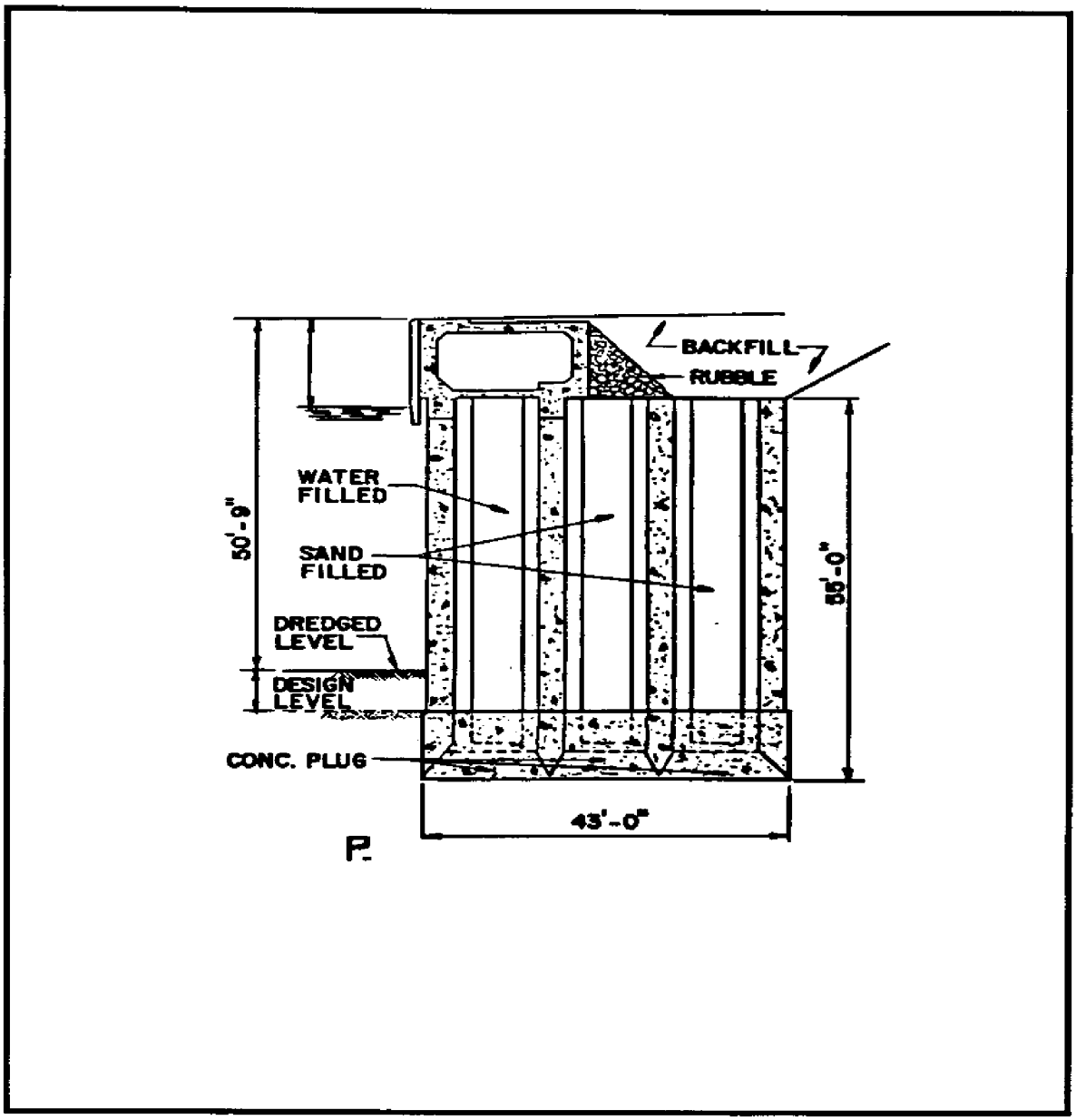

Figure 47
Quaywalls - Actual Constructions (Example P)

5.3.3 Filled, Cellular Construction

a) Stiffen cells by capping sheet pile walls with concrete (see Figure 48).

b) Do not rely on fill in cells to support slab. Fill in cells will settle and will settle differentially.

c) Be cautious about driving displacement-type piles inside cells for support of trackage, utilities, or other purpose. Use non-displacement types.

d) Be cautious about densifying soil in cells by use of compaction piles or vibrators.

5.4 Appurtenances. Fender systems, fittings, and other appurtenances are to be provided as described for piers and wharves in MIL-HDBK-1025/1, Piers and Wharves. Utility services are to be provided as described for dockside utilities in MIL-HDBK-1025/2, Dockside Utilities for Ship Service. Aids to navigation are to be provided as described for harbors in DM-26.1, Harbors.

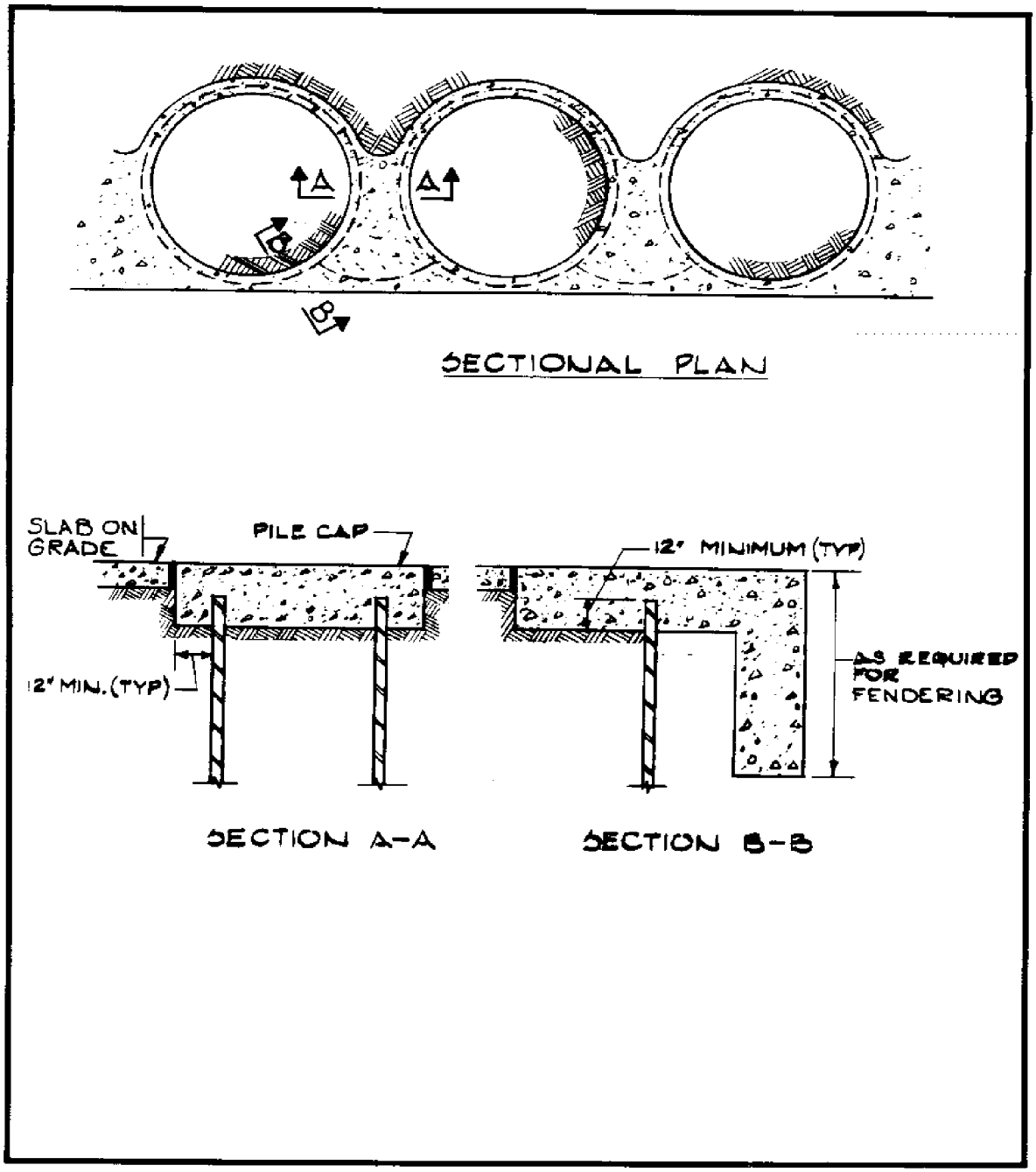

Figure 48
Filled Cellular Construction

PAGE 68 INTENTIONALLY BLANK

REFERENCES

Lateral Support Systems and Underpinning, FHWA-RD-Report 75-128, Federal Highway Administration, Offices of Research and Development, Washington, DC 20590. Available to the public through National Technical Information Service, Springfield, VA 22161.

NAVFACENGCOM Design Manuals and Military Handbooks. Government agencies and the private sector may obtain standardization documents (specifications/ handbooks) from the Commanding Officer, Naval Publications and Forms Center, 5801 Tabor Avenue, Philadelphia, PA 19120. Government agencies must order design manuals/P-pubs using the Military Standard Requisitioning and Issue Procedure (MILSTRIP) system from NPFC. The private sector must write to NPFC, Cash Sales, Code 1051, 5801 Tabor Avenue, Philadelphia, PA 19120.

MIL-HDBK-1002/2	Structural Engineering - Loads
DM-7.01	Soil Mechanics
DM-7.02	Foundations and Earth Structures
MIL-HDBK-1025/1	Piers and Wharves
MIL-HDBK-1025/2	Dockside Utilities for Ship Service
MIL-HDBK-1025/6	General Criteria for Waterfront Construction
DM-26.1	Harbors
DM-26.2	Coastal Protection
NFGS-09809	Protection of Buried Steel Piping and Steel Bulkhead Tie Rods

Shore Protection Manual, Volumes I, II, and III, U.S. Army Coastal Engineering Research Center, 1984, available at the U.S. Government Printing Office, Washington, DC 20402.

THIS PAGE IS INTENTIONALLY BLANK

GLOSSARY

Apron. Clear area around perimeter of a dock for parking, work area, access, and storage.

Bent. Transverse pile framing in the substructure of a pier or wharf.

Berthing Basin. Area of harbor set aside for berthing vessels at docks and open anchorages.

Bottom. The ground or bed under any body of water; the bottom of the sea.

Breaking Out. Setting up; preparing.

Bulkhead. Refer to Section 2, para. 2.1.2.

Bulkhead Lines. Lines which establish limits outside of which continuous solid-fill construction is not permitted.

Caisson. (1) A watertight box used to surround the works involved in laying the foundation of a bridge or other structure below water.

(2) A watertight box used as a closure for graving dock entrances.

Camel. Floats placed between vessel and dock, or between vessels, designed to distribute wind and current forces acting on the vessel.

Chock. (1) A horizontal component of a fender system used to brace the vertical piles or fenders.

(2) A mooring fitting having curved ends for guiding lines.

Cofferdam. A temporary wall serving to exclude water from any site normally under water so as to facilitate the laying of foundations or other similar work.

Controlling Depth. The least depth in the navigable parts of a waterway, governing the maximum draft of vessels that can enter.

Cover. The thickness of concrete between the outer surface of any reinforcement and the nearest surface of the concrete.

Current. A flow of water.

Dap. Notches in timber to provide flat bearing surface.

Deadman. Concrete, plate, or other anchorage for a land or water tie.

Diaphragm. (1) Short transverse member connecting to longitudinal stringers.

(2) Transverse piling in sheet-pile cofferdam.

Dock. A pier or wharf used for berthing vessels and for transfer of cargo or passengers.

Dolphin. A structure usually consisting of a cluster of piles. It is placed near piers and wharves or similar structures, or alongshore, to guide vessels into their moorings or to fend vessels away from structures, shoals, or the shore.

Draft. Depth of vessel hull below the waterline.

Dredge Line. Line establishing limit of dredging.

Ebb Tide. The period of tide between high water and the succeeding low water; a falling tide.

Fender. A device or framed system placed against the edge of a dock, to take the impact from berthing or berthed vessel.

Flood Tide. The period of tide between low water and the succeeding high water; a rising tide.

Freeboard. Distance between the weather deck of a floating vessel and the water line.

Harbor. In general, a sheltered arm of the sea, easily accessible to maritime routes in which ships may seek refuge, transfer cargo, and undergo repair.

Harbor Lines. Lines which control the location of shore structures in or adjacent to navigable waters.

Hurricane. An intense tropical cyclone in which winds tend to spiral inward toward a core of low pressure, with maximum surface wind velocities that equal or exceed 80 mph (70 knots) for several minutes or longer at some points. Tropical storm is the term applied if maximum winds are less than 80 mph.

Lagging. Horizontal timber sheeting commonly used in bulkhead walls.

Lee. (1) Shelter, or the part or side sheltered or turned away from the wind or waves.

(2) The quarter or region toward which the wind blows (chiefly nautical).

Mean High Water (MHW). The average height of the high water over a 19-year period. For shorter periods of observations, corrections are applied to eliminate known variations and reduce the results to the equivalent of a mean 19-year value.

Mean Low Water (MLW). The average height of the low waters over a 19-year period. For shorter periods of observations, corrections are applied to eliminate known variations and reduce the results to the equivalent of a mean 19-year value.

Mean Sea Level. The average height of the surface of the sea for all stages of the tide over a 19-year period, usually determined from hourly readings.

Mole. A massive land-connected, solid fill structure of earth (generally revetted) masonry, or large stone. It may serve as a breakwater or pier.

Pier. A dock that is built from the shore out into the harbor and used for berthing and mooring vessels.

Pierhead Lines. Lines which establish the outboard limit for open pier construction.

Quarry Run Stone. Stone as it is excavated from the quarry with no screening.

Quaywall. Refer to Section 2, para. 2.1.3.

Relieving Platform. A platform supported by piles, employed in wharf construction, to relieve lateral pressures from surcharge.

Revetment. A facing of stone, concrete, or other form of armor built to protect a scarp, embankment, or shore structure against erosion by wave action or current.

Rigid Frame. A rigid joint structure in which moments and shears in joints maintain the equilibrium of the structure.

Riprap. A layer, facing, or protective mound on stones randomly placed to prevent erosion, scour, or sloughing of a structure or embankment; also the stone so used.

Scuppers. Openings for drainage of water off a pier, wharf, or bridge deck.

Seawall. Refer to Section 2, para. 2.1.1.

Shoreline. The intersection of a specified plane of water with the shore or beach (e.g., the highwater shoreline would be the intersection of the plane of mean high water with the shore or beach). The line delineating the shoreline on National Oceanic and Atmospheric Administration nautical charts and surveys approximates the mean high water line.

Significant Wave Height. The average height of the one-third highest waves of a given wave group. Note that the composition of the highest waves depends upon the extent to which the lower waves are considered. In wave record analysis, the average height of the highest one-third of a selected number of waves, this number being determined by dividing the time of record by the significant period.

Slip. A space between two piers for berthing a vessel.

Soldier Beam. Vertical beam used to resist lateral pressure through cantilever action.

Sponson. Overhanging section of vessel deck.

Stringer. A longitudinal member in a structural framework.

Swell. Wing-generated waves that have traveled out of their generating area. Swell characteristically exhibits a more regular and long period, and has flatter crests than waves within their fetch.

Tidal Prism. The total amount of water that flows into a harbor or estuary or out again with movement of the tide, excluding any freshwater flow.

Tidal Range. The difference in height between consecutive high and low waters.

Tide. The periodic rising and falling of the water that results from gravitational attraction of the moon and sun and other astronomical bodies acting upon the rotating earth.

Wale. A horizontal component of a fender system generally placed between the vertical fenders and the pier structure and used for horizontal distribution of forces from a vessel.

Waterline. A juncture of land and sea. This line migrates, changing with the tide or other fluctuation in the water level.

Wave. A ridge, deformation, or undulation of the surface of a liquid.

Wave Height. The vertical distance between a crest and the preceding trough (see also significant wave height).

Wharf. A dock, oriented approximately parallel to shore and used for berthing or mooring vessels.

CUSTODIAN
NAVY - YD

PREPARING ACTIVITY
NAVY - YD

PROJECT NO.
FACR-0268