SYSTEM
INTERNATIONAL

MIL-HDBK-1027/1B
31 JANUARY 1998

Superseding
MIL-HDBK-1027/1A
31 JULY 1994

DEPARTMENT OF DEFENSE
HANDBOOK

FIREFIGHTING SCHOOL FACILITIES

AMSC N/A

AREA FACR

DISTRIBUTION STATEMENT A. Approved for public release; distribution is unlimited.

ABSTRACT

This handbook provides basic design guidance developed from extensive reevaluation of facilities necessary to support new firefighting devices. It is intended for use by experienced architects and engineers. The contents cover the technical and environmental requirements of the structures that house them.

FOREWORD

This handbook has been developed from an evaluation of facilities in the shore establishment, from surveys of the availability of new materials and construction methods, and from selection of the best design practices of the Naval Facilities Engineering Command (NAVFACENGCOM), other Government agencies, and the private sector. This handbook was prepared using, to the maximum extent feasible, national professional society, association, and institute standards. Deviations from these criteria cannot be made without prior approval of the NAVFACENGCOM Criteria Office.

Design cannot remain static any more than can the functions it serves or the technologies it uses. Accordingly, recommendations for improvement are encouraged and should be furnished to Commanding Officer, Atlantic Division, Naval Facilities Engineering Command (LANTNAVFACENGCOM), Code 403, 1510 Gilbert Street, Norfolk, VA 23511-2699; telephone (757) 322-4243.

DO NOT USE THIS HANDBOOK AS A REFERENCE DOCUMENT FOR PROCUREMENT OF FACILITIES CONSTRUCTION. IT IS TO BE USED IN THE PURCHASE OF FACILITIES ENGINEERING STUDIES AND DESIGN (FINAL PLANS, SPECIFICATIONS, AND COST ESTIMATES). DO NOT REFERENCE IT IN MILITARY OR FEDERAL SPECIFICATIONS OR OTHER PROCUREMENT DOCUMENTS.

TRAINING FACILITIES CRITERIA MANUALS

Criteria Manual	Title	Preparing Activity
MIL-HDBK-1027/1	Firefighting School Facilities	LANTDIV
MIL-HDBK-1027/2	General Training Facilities (Proposed)	SOUTHDIV
MIL-HDBK-1027/3	Range Facilities and Miscellaneous Training Facilities Other Than Buildings	SOUTHDIV
MIL-HDBK-1027/4	Aviation Training Facilities	SOUTHDIV

FIREFIGHTING SCHOOL FACILITIES

CONTENTS

			Page
Section 1		INTRODUCTION	
	1.1	Scope	1
	1.2	Application	1
	1.2.1	Types of Trainers	2
Section 2		DESIGN CRITERIA	
	2.1	Site Development	3
	2.1.1	Flooding Considerations	3
	2.1.2	Prevailing Wind	3
	2.1.3	Drainage	3
	2.1.4	Circulation Patterns	3
	2.1.5	Support Facilities	3
	2.1.6	Security	3
	2.1.7	Setbacks and Clearances	3
	2.1.8	Pollution Permits	4
	2.1.9	Contaminated Soil	4
	2.1.10	Design for Accessibility of Physically Handicapped Personnel	4
	2.1.11	Energy Conservation	4
	2.1.12	Design Similarity	4
	2.2	Utility Design	5
	2.2.1	General	5
	2.2.1.1	Service	5
	2.2.1.2	Design for Simultaneous Operation	5
	2.2.1.3	Freeze Protection and Snow	5
	2.2.1.4	Breathing Air	6
	2.2.1.5	Fire Department	6
	2.2.1.6	Electromagnetic Interference (EMI)	6
	2.2.2	Equipment Outages	6
	2.2.2.1	Standby	6
	2.2.2.2	Emergency Power	7
	2.2.2.3	Emergency Water	7
	2.2.2.4	Lightning Protection	7
	2.2.2.5	Lighting	7
	2.2.3	Fuel	8

		Page
2.2.3.1	Propane	8
2.2.3.2	Natural Gas	21
2.2.3.3	Oil and Gasoline	21
2.2.4	Water	22
2.2.4.1	Potable Water	22
2.2.4.2	Water Storage	23
2.2.5	Wastewater	23
2.2.6	Electrical Power	23
2.3	Supporting Facilities	24
2.3.1	Utilities Building	24
2.3.2	Storage and Refill	25
2.4	Other Facilities	26
2.4.1	P-250 Demonstration	26
2.4.2	Wild Hose	27
2.4.3	Smoke House	27
2.4.4	Hose Drying Area	27
2.4.5	Maintenance Contractor Area	28
2.4.5.1	Room Provisions	28
2.5	Interfaces	28
2.5.1	General	28
2.5.2	Device Contractor	29
2.5.3	Facility Contractor	30
2.5.3.1	Electric	30
2.5.3.2	Data Terminal Cabinet (DTC)	30
2.5.3.3	Fuel	31
2.5.3.4	Fireplace	31
2.5.3.5	APC Extinguishing Agent Simulation	31
2.6	Device	31
2.7	Gas Chamber	32
2.7.1	General	32
2.7.2	Training	32
2.7.3	Site Development	33
2.7.4	Architectural	33
2.7.4.1	Layout	33
2.7.4.2	Decontamination Station	33
2.7.4.3	Storage Locker	34
2.7.4.4	Collateral Equipment	34
2.7.5	Plumbing	34
2.7.6	Mechanical	34

Page

2.7.7 Electrical..... 35
2.7.8 Tear Gas Characteristics..... 35

Section 3 TRAINING STRUCTURE
3.1 Training Courses..... 36
3.2 General..... 37
3.2.1 Heat Protection..... 37
3.2.2 Personnel Spacing..... 37
3.2.3 Weather and Freeze Protection..... 37
3.2.4 Drainage..... 38
3.2.4.1 Drainage Piping Material..... 38
3.2.5 Escape Trunks..... 38
3.2.6 Consumables..... 39
3.2.7 Burner Rooms..... 39
3.2.8 Obstructions..... 39
3.2.9 Separation Chamber and Piping Traps..... 39
3.2.10 Fireplace Compartment Dimensions..... 40
3.3 Repair or Crash Lockers..... 40
3.4 Doors and Hatches..... 41
3.4.1 Watertight Doors..... 41
3.4.2 Hollow Metal Doors..... 41
3.4.3 Wire Mesh Doors..... 42
3.4.4 Automatic Closing (Ellison) Doors..... 42
3.4.5 Large Hatch..... 42
3.4.6 Small Hatch..... 42
3.5 Ladders..... 42
3.5.1 Inclined Ladders..... 42
3.5.2 Vertical Ladders..... 43
3.6 Lighting and Electrical..... 43
3.6.1 General Lighting..... 43
3.6.2 Special Compartment Lighting..... 44
3.6.3 120-Volt Alternating Current (Vac) Convenience Outlets..... 44
3.6.4 Electrical Interlocks in Crawl Space and Burner Rooms..... 44
3.6.5 Alarm for Loss of Electrical Power..... 47
3.7 Floors..... 47
3.7.1 Training Floor..... 47
3.7.2 Crawl Space Floor..... 48

Page
3.7.3 Staging Floor..... 49
3.7.4 Maintenance Floor..... 50
3.7.5 Computer Floor..... 50
3.7.6 Grating Floors and Platforms..... 50
3.8 Walls..... 50
3.8.1 Wall System..... 50
3.8.2 Windows..... 51
3.8.3 Cool Down..... 51
3.9 Roofs and Ceilings..... 52
3.9.1 Training Compartment Ceilings..... 52
3.9.2 Staging Area Roofs..... 52
3.10 Instructor's Station and Electrical Space..... 53
3.10.1 Air Conditioned Space..... 53
3.10.2 Temperature and Relative Humidity..... 53
3.10.3 Fire Protection..... 53
3.10.4 Window Glass..... 53
3.10.5 Plugged Tap..... 53
3.11 Ventilation..... 54
3.11.1 General..... 54
3.11.2 Purge..... 54
3.11.3 Combustion Air..... 55
3.11.4 Exhaust..... 55
3.11.5 Dilution Air..... 56
3.11.6 Equipment..... 56
3.11.6.1 Louvers..... 56
3.11.6.2 Dampers..... 56
3.11.6.3 Fan..... 58
3.11.7 Control..... 61
3.11.8 Preheat..... 61
3.11.9 Other Rooms..... 62
3.11.9.1 Burner and Electrical Rooms..... 62
3.11.9.2 Escape Trunks..... 62
3.11.10 Safety..... 63
3.11.10.1 Fuel Sensors..... 63
3.11.10.2 24-Hour Propane Alarm..... 63
3.11.10.3 Fan Interlock..... 63
3.11.10.4 Insulation or Shielding..... 64
3.12 21C12 and 21C12A Structures..... 64
3.12.1 General..... 64

Page
3.12.2 Siting..... 64
3.12.3 Architectural..... 64
3.12.3.1 Layout..... 64
3.12.3.2 Fireplace Compartment..... 65
3.12.3.3 Crawl Space..... 66
3.12.3.4 Staging Areas..... 66
3.12.3.5 Burner Room..... 66
3.12.3.6 Bulk Storage..... 66
3.12.3.7 AFFF Fill Station..... 67
3.12.3.8 CO2 Extinguisher Fill Station..... 68
3.12.3.9 Repair Lockers..... 68
3.12.3.10 Ceilings..... 68
3.12.3.11 Doors..... 68
3.12.3.12 Fireplaces..... 69
3.12.3.13 Instructor's Station..... 70
3.12.3.14 Miscellaneous..... 70
3.12.4 Mechanical..... 70
3.12.4.1 Use Rate..... 70
3.12.4.2 Firefighting Agents..... 70
3.12.4.3 Ventilation for 21C12 and 21C12A Structures..... 73
3.12.4.4 Air Conditioning and Heating..... 75
3.12.4.5 Cooling Spray..... 75
3.12.4.6 Breathing Air..... 76
3.12.5 Electrical..... 77
3.12.5.1 Power..... 77
3.12.5.2 Lighting..... 77
3.12.6 Propane Alarm System..... 77
3.12.6.1 Central Control Panel..... 78
3.12.6.2 Audible Alarms..... 78
3.12.6.3 Propane Warning Signs..... 79
3.12.7 Manual Pull Stations..... 79
3.12.8 Auxiliary Control Stations.....79
3.12.9 Intercom System..... 80
3.13 19F1A and 19F1B Structures..... 80
3.13.1 General..... 80
3.13.2 Architectural..... 80
3.13.2.1 Layout..... 80
3.13.2.2 Ceilings..... 81

Page
3.13.2.3 Doors and Hatches..... 81
3.13.2.4 Fireplaces..... 81
3.13.2.5 Enclosures..... 83
3.13.2.6 Instructor's Station..... 84
3.13.2.7 Miscellaneous..... 84
3.13.3 Mechanical..... 85
3.13.3.1 Use Rate..... 85
3.13.3.2 Firefighting Agents..... 85
3.13.3.3 Ventilation..... 88
3.13.3.4 Air Conditioning..... 89
3.13.4 Electrical..... 89
3.14 19F3 and 19F3B Structures..... 90
3.14.1 General..... 90
3.14.2 Architectural..... 91
3.14.2.1 Bilge Fire Building (19F3 and 19F3B)..... 91
3.14.2.2 Galley/Berthing Fire Building..... 92
3.14.2.3 Pit Fire Building..... 92
3.14.2.4 Doors..... 93
3.14.2.5 Fireplaces..... 93
3.14.2.6 Instructor's Station..... 93
3.14.3 Mechanical..... 93
3.14.3.1 Use Rates..... 93
3.14.3.2 Ventilation..... 95
3.14.3.3 Air Conditioning..... 95
3.14.4 Electrical.....100
3.15 19F3A and 19F3C Structures.....101
3.15.1 General.....101
3.15.2 Architectural.....101
3.15.2.1 Layout.....101
3.15.2.2 Doors and Hatches.....102
3.15.2.3 Fireplaces.....103
3.15.2.4 Instructor's Station.....103
3.15.2.5 Miscellaneous.....103
3.15.3 Mechanical.....105
3.15.3.1 Use Rate 105
3.15.3.2 Firefighting Agents.....108
3.15.3.3 Ventilation.....109
3.15.3.4 Air Conditioning.....109
3.15.4 Electrical.....109

Page
3.15.4.1 Power.....109
3.15.4.2 Lighting.....109
3.16 19F4 and 19F4A Structures.....109
3.16.1 General.....109
3.16.2 Architectural.....110
3.16.2.1 Layout.....110
3.16.2.2 Foam Deck.....112
3.16.2.3 Crash Lockers.....113
3.16.2.4 Instructor's Station.....113
3.16.2.5 Doors.....113
3.16.2.6 Structural Features.....114
3.16.2.7 Miscellaneous.....115
3.16.3 Mechanical.....115
3.16.3.1 Use Rate.....115
3.16.3.2 Firefighting Agents.....118
3.16.3.3 Ventilation.....118
3.16.3.4 Air Conditioning.....119
3.16.3.5 Miscellaneous.....119
3.16.3.6 Foam Proportioning.....119
3.16.4 Electrical.....119
3.16.4.1 Power.....120
3.16.4.2 Lighting.....120
3.17 19F5 and 19F5A Structures.....120
3.17.1 General.....120
3.17.2 Architectural.....120
3.17.2.1 Layout.....120
3.17.2.2 Ceilings.....120
3.17.2.3 Doors.....120
3.17.2.4 Fireplaces.....120
3.17.2.5 Instructor's Station.....121
3.17.2.6 Egress Chamber.....121
3.17.2.7 Miscellaneous.....122
3.17.3 Mechanical.....123
3.17.3.1 Use Rate.....123
3.17.3.2 Firefighting Agents.....123
3.17.3.3 Ventilation.....126
3.17.3.4 Air Conditioning.....126
3.17.4 Electrical.....127
3.17.4.1 Power.....127
3.17.4.2 Lighting.....127

Page

Section 4 AGENTS AND APPARATUS
4.1 General....128
4.2 Aqueous Film-Forming Foam (AFFF)....128
4.2.1 Substitute....128
4.2.2 Handling System....130
4.2.3 Portable AFFF Fire Extinguishers 131
4.3 Potassium Bicarbonate....132
4.4 Carbon Dioxide (CO_2)....133
4.5 Halon....135
4.6 Aqueous Potassium Carbonate (APC)....135
4.7 Nozzles....135
4.8 Oxygen Breathing Apparatus (OBA)....135
4.9 Hose Stations....135
4.9.1 Hose Station 1 (HS1)....136
4.9.2 Hose Station 2 (HS2)....136
4.9.3 Foam Station (FS)....137
4.9.4 Foam Reel (FR)....137
4.9.5 Stand Pipe (SP)....138
4.9.6 Submarine Hose Station 1 (SHS1)....138
4.9.7 Submarine Hose Station 2 (SHS2)....139
4.9.8 Submarine Hose Station 3 (SHS3)....139
4.9.9 Combined Submarine Hose Station (CSHS)....139
4.9.10 PKP Fire Extinguisher (PFE)....140
4.9.11 Twin Agent Reels (TAR)....140

Section 5 PROTECTION OF THE ENVIRONMENT
5.1 Permits....141
5.2 Air....141
5.2.1 PKP....141
5.2.2 Artificial Smoke....151
5.2.3 Benzene....151
5.3 Wastewater....151
5.3.1 General....151
5.3.2 Separation Chamber....154
5.3.3 Pretreatment....154
5.3.4 Recovery....156

Page

APPENDICES

Appendix A	General	158
B	19F1A and 19F1B Structures	197
C	19F3 and 19F3B Structures	203
D	19F3A and 19F3C Structures	211
E	19F4 and 19F4A Structures	216
F	19F5 and 19F5A Structures	223
G	21C12 and 21C12A Structures	226
H	Gas Chamber	253
I	Carbon Dioxide (CO2)	256
J	Propane	264

TABLES

Table 1	Main Ventilation Air for Fireplace Compartment of 21C12 and 21C12A Structures	60
2	21C12 and 21C12A Structures	71
3	Dimensions of Burn Areas for 19F1A and 19F1B Structures Figures	82
4	19F1A and 19F1B Structures	86
5	19F1A and 19F1B Ventilation Air	90
6	Dimensions for 19F3 and 19F3B Structures Fireplace Locations	94
7	19F3 and 19F3B Structures	96
8	19F3 and 19F3B Ventilation Air	100
9	Dimensions for 19F3A and 19F3C Structures Fireplaces	104
10	19F3A and 19F3C Structures	106
11	19F3A and 19F3C Ventilation Air	110
12	19F4 and 19F4A Structures	116
13	19F5 and 19F5A Structures	124
14	19F5 and 19F5A Ventilation Air	127
15	Typical Air Emissions Requirements	142
16	Wastewater Characteristics	143
17	Wastewater Surcharge Limits	153

REFERENCES.....277

GLOSSARY.....284

Section 1: INTRODUCTION

1.1 Scope. This military handbook prescribes design criteria necessary to support new firefighting training devices and to outline technical and environmental requirements of structures which house them.

1.2 Application. Training facilities covered by this handbook as identified by the devices contained within are as follows:

a) 19F1A and 19F1B - Advanced Shipboard Firefighting Trainers

b) 19F3 and 19F3B - Basic Shipboard Firefighting Trainers, which consist of four training structures:

(1) B1 - Engine Room - Bilge Fire Trainer

(2) B2 - Galley/Berthing Fire Trainer

(3) B3 - Pit Fire Trainer

(4) B4 - Pit Fire Trainer

c) 19F3A and 19F3C - Combined Basic/Advanced Shipboard Firefighting Trainers, which consist of a 19F1A portion and 19F3-B3 trainers

d) 19F4 and 19F4A - Basic Shipboard Aircraft Firefighting Trainers

e) 19F5 and 19F5A - Basic Recruit Shipboard Firefighting Trainers

f) 21C12 and 21C12A - Submarine Firefighting Trainers

g) Gas Chamber - Chemical Warfare Trainer

h) Seawolf

1.2.1 Types of Trainers. There are two types of trainers: warm and cold weather designs. Cold weather design is applicable to sites in climates where annual heating degree days are 1100 or greater. Warm weather design is applicable to sites in climates where annual heating degree days are less than 1100.

Section 2: DESIGN CRITERIA

2.1 Site Development

2.1.1 Flooding Considerations. When planning the site for a new 21C12 and 19F series facility, the finished floor area of the crawl space should be high enough to preclude flooding during a 100-year storm. The training device equipment that will be installed in the crawl space is expensive and would be destroyed if the crawl space were flooded.

2.1.2 Prevailing Wind. Prevailing wind direction should be one of the first considerations in selecting a site. Heat and products of combustion may be objectionable to adjacent buildings located downwind. Show prevailing wind direction on drawings.

2.1.3 Drainage. Rainwater should be channeled away from device structures because water that enters the structure should be first treated and then disposed of in the sanitary sewer. Since firefighting agents are collected in the structures, surface runoff can be disposed of in the storm system without treatment.

2.1.4 Circulation Patterns. Design the site layout to allow for personnel circulation patterns between each of the various support facilities and trainers.

2.1.5 Support Facilities. There are various support facilities that must be provided with the 19F and 21C12 series trainers. Provide classroom space, restrooms, showers, and changing area to support the students and instructors. In addition, provide a maintenance area, utilities space, storage area, and wastewater treatment system. Design initial planning to allow for bulk deliveries of fuel and dry storage.

2.1.6 Security. Fence the grounds around a firefighting school to restrict entry of unauthorized personnel. Fence each fuel and CO_2 storage area, and exterior doors to firefighting school facilities should be of the lockable type.

2.1.7 Setbacks and Clearances. The exterior of firefighting structures should have a clearance of 16 m away from any

obstruction, trees, building, structure, etc., to allow free access of natural ventilation air to the crawl space, and to allow access for snow and ice removal.

2.1.8 Pollution Permits. The preliminary design should include the initiation of air and water pollution permit applications.

2.1.9 Contaminated Soil. As a result of several firefighting trainer sites having contaminated soil, evaluate selected firefighting trainer sites for soil and groundwater contamination during the planning stage of the project. Permits may be required for the site cleanup.

2.1.10 Design for Accessibility of Physically Handicapped Personnel. Provisions for physically handicapped personnel are not required in firefighting training facilities. Firefighting trainers are required to be designed for able-bodied naval personnel.

2.1.11 Energy Conservation. Normal building energy conservation measures are not a consideration in the firefighting facilities because of the facilities application, i.e., because heat is generated by the fires, energy conservation measures are not feasible. Energy studies are not required to be performed for firefighting trainers because the trainers are the same as trainers at other locations, and each trainer has the same mechanical and electrical systems. The one area of the firefighting facilities that will have conditioned air is the instructor station and the electrical room, which should be designed to conserve energy in compliance with the latest techniques and applicable standards. Refer also to MIL-HDBK-1190, Facility Planning and Design Guide.

2.1.12 Design Similarity. Design and construct firefighting training structures the same from site to site (i.e., firefighting training structures should have the same internal dimensions, internal arrangements, similar functions, similar equipment, etc.). Design similarity is required to ensure that all naval personnel are exposed to similar training environments.

2.2 Utility Design

2.2.1 General

2.2.1.1 Service. The various services, water, fuel, 100 percent foam (surrogate) concentrate, and, possibly, compressed air should be routed to each training structure by underground pipe. Each service should include a manual shutoff valve for maintenance purposes. The valves to a given structure should be grouped together in a valve pit with a cover small and light enough to be lifted by two men. No cover should weigh more than 57 kg and each cover should have lifting handles. The propane valve should be in a separate pit.

2.2.1.2 Design for Simultaneous Operation. Design and size utilities for the firefighting training school to allow for training structures to operate simultaneously.

2.2.1.3 Freeze Protection and Snow. Firefighting facilities should be protected against freeze damage. Because training structures are not usually heated, interior and exterior water-based utilities located aboveground should be protected. Large valve pits with many valves should also include protection for freezable utilities. Refer also to pars. 3.2.3 and 3.11.8 for additional requirements. Methods of freeze protection include drain-down, heat tracing, and air purge. The following criteria applies to this handbook:

a) When a drain-down system employs some method of automatically sensing ambient temperature and controlling a valve, install a manual valve in parallel with the automatic valve. The manual valve will provide an added measure of protection.

b) Provide freeze protection at any location where there is the possibility of freezing temperatures. Sites as far south as Mayport, Florida, should have freeze protection.

c) In those locations subjected to regular snow accumulations, ensure that the design will not impede the operation of exterior equipment. Design facilities to accommodate snow removal procedures.

d) Since the foam stations and foam reels cannot be adequately drained they should be freeze-protected by a removable, insulated and electrically heated cover. The cover should be completely removable so that during training the hose stations maintain a shipboard appearance.

2.2.1.4 Breathing Air. The quality standard for compressed air to be used for breathing air is Federal Specification (Fed. Spec.) BB-A-1034, Compressed Air, Breathing. Breathing air is not a requirement in surface fleet training facilities; however, it is a requirement for submarine fleet trainers. Refer to par. 3.12.4.6 for requirements. Breathing air for instructors by the use of personal "SCOTPAK" units is not covered by this handbook.

2.2.1.5 Fire Department. Training facilities are designed on the basis that experienced instructors with adequate fire control equipment will be present at--all times that training is being conducted. The fire suppression capability will be supplemented by a municipal or military fire department whenever possible, with fire department notification provided by properly spaced exterior fire alarm boxes, fire telephones, or other approved means. Provide fire hydrants at each firefighting school site in accordance with the National Fire Protection Association (NFPA) 24, Installation of Private Fire Service Mains and Their Appurtenances.

2.2.1.6 Electromagnetic Interference (EMI). Test firefighting project sites for EMI to determine required EMI protection for trainers. EMI testing should be accomplished by the Naval Air Warfare Center Training Systems Division (NAWCTSD) during preliminary design to determine cost impact. If NAWCTSD test results indicate EMI shielding is required, NAWCTSD should determine if the device equipment can be shielded. If device EMI shields are determined to be inadequate, then NAWCTSD should notify the Engineering Field Division (EFD) or Engineering Field Activity (EFA), NAVFACENGCOM, and LANTNAVFACENGCOM of facility EMI shielding requirements.

2.2.2 Equipment Outages

2.2.2.1 Standby. There is no requirement for standby equipment in excess of full design capacity for the systems supporting a firefighting training facility. Critical support

systems, those whose downtime would affect a large portion of the training, should be designed with parts totaling full capacity, e.g., two 50 percent fans or two 50 percent pumps. Then while a piece of equipment is not operating and being repaired, the second piece of equipment can be carrying 50 percent of the load. In all cases, critical equipment should be designed to provide as much reliability and maintainability as possible.

2.2.2.2 Emergency Power. Emergency power is generally not a requirement for firefighting facilities. The fuel and CO2 systems are required to be failsafe, shutting off fuel and CO2 when electrical power is lost. Without a continuous source of fuel, there can be no fire, because there is no combustible material inside a training structure. For this reason the propane entry station consisting of the "block and vent" (Appendix J, Figure J-2) should be located outside of the training structure.

The availability of electricity at most training facilities is reliable enough that periodic outages will not adversely affect training. In the event of electrical power outage at a trainer, provide a battery backup annunciation and alarm at the 24-hour duty desk and at the instructor's station. Provide capability to silence the alarm at both locations.

2.2.2.3 Emergency Water. Emergency water should be water supplied under sufficient pressure to fight fires without the use of electrical energy. Water flow tests should be performed to determine the adequacy of the water supply system. A separate emergency water system is not necessary for the 19F series trainers for the same reasons stated above under emergency power. The Navy's portable gasoline powered P-250 pumps and the Municipal Fire Department are available for non-trainer structure fires.

2.2.2.4 Lightning Protection. As a minimum, the requirements of NFPA 78, Lightning Protection Code, should be followed. Lightning protection is not required for the propane tanks.

2.2.2.5 Lighting. The fenced-in grounds and parking area around the firefighting facility should be lighted to provide general security.

2.2.3 Fuel

2.2.3.1 Propane. Propane should be the fuel for the 19F and 21C12 series trainers. It has a standard and reliable chemical composition as opposed to natural gas which is a blend of chemicals. Propane gives the desirable flame characteristics and has been tested for environmental acceptability in the training situation. Complete stoichiometric burning of propane requires 23 cubic meters (cu. m) of air for each cubic meter of fuel at atmospheric pressure. The following criteria is provided pertaining to propane as outlined in NFPA 58, Storage and Handling of Liquefied Petroleum Gases:

a) Properties and characteristics of liquefied petroleum (LP) gases. Propane has certain properties and characteristics which must be understood by the persons handling and processing these products.

(1) They are normally gases but are changed to liquid state by the application of moderate pressure. At atmospheric pressure commercial propane boils at minus 42.2 degrees C. It is evident that at normal atmospheric temperatures and pressures, propane will be in a gaseous form. Propane in liquid state and open to the atmosphere will evaporate (not boil) although the atmospheric temperature may be below its boiling point.

(2) LP gases contain no toxic components such as carbon monoxide. However, the vapors should not be inhaled as serious accidents could occur from ignition of gases contained in the lungs.

(3) LP gases are heavier than air. With air equal to 1.0, the specific gravity of propane is 1.52. LP gas will, therefore, collect in low places but will eventually diffuse into the atmosphere.

(4) The explosive range of propane-air mixture is lower and narrower than with other fuel gases and is 2.15 (lower explosive limit) to 9.6 (higher explosive limit) percent in air. The lower explosive limit is the limit at which combustion of propane can be sustained. The higher explosive limit is the limit at which the combustion of propane cannot be sustained.

(5) In accordance with requirements of NFPA 58, LP gases are effectively odorized to positively indicate presence of gas down to concentration in air of not over one-fifth the lower explosive limit.

(6) The pressure exerted by propane gas in a container is entirely dependent upon the temperature of the contents. Excessive pressure may be relieved by discharging gas from above the liquid thus reducing the temperature of the liquid or by application of a cooling agent to the outside of the container. In the interest of safety, it is preferable to reduce the temperature of the liquid rather than permit the escape of high pressure gas with resultant potential hazard.

b) Propane data as listed in NFPA 58:

Total heating value after vaporization:	25 140 kJ/L (liquid)
	92 430 kJ/cu. m
	50 000 kJ/kg

.271 cu. m of vapor per L of liquid at 15.56 degrees C

Vapor pressure in kPa at:

20 degrees C	895
40 degrees C	1482
55 degrees C	1980

Specific gravity of liquid at 15.56 degrees C:	0.504
Initial boiling point at 1.00 atmosphere, degrees C:	-42

Flammability limit, percent of propane gas in air:

Lower	2.15
Upper	9.60

c) The design of the fuel system should be in accordance with NFPA 54, National Fuel Gas Code and NFPA 58 and NAVFAC Design Manual DM-22, Petroleum Fuel Facilities. NFPA 58 covers the LP gas system including the container, the vaporizer,

the unloading station, and tank and pipe appurtenances up to the double block and bleed valve at each building. NFPA 54 covers any part of the system where the propane gas pressure is less than 1370 kPa.

d) Fuel should be stored in a single location which provides easy access for tank trucks. This is to facilitate inventory taking, reduce installation costs, and increase safety. Use a minimum of two tanks to store the fuel. This allows for tank maintenance without interruption to the training. The total storage should equal 30 days' consumption. Design a full storage tank to contain 80 percent liquid equivalent to 30 days' storage and 20 percent vapor. The vapor space allows for thermal expansion and must never be used for liquid storage. Fence the storage area to restrict pedestrian and vehicular traffic. The fence should have a main entrance gate and a second gate on the opposite fence from such gate for emergency exit. At fence openings, provide a remote shutoff station for the emergency shutoff valves, refer to subpar. o). The fence area should have anti-vehicle barricade posts to protect tanks from an accidental collisions from vehicles or trucks. In accordance with NFPA 58, the storage area should not have walls, barricades, curbed areas, etc., which would prevent access and lateral ventilation from flushing the area. Provide the tanks in accordance with the American Society of Mechanical Engineers (ASME), Boiler and Pressure Vessel Code, Section VIII, unfired pressure with a minimum working pressure of 2100 kPa. Propane storage tanks should have an American Society of Mechanical Engineers stamp of approval on the tanks. No used tanks are allowed. Tank foundations should be proper for the soil bearing conditions and the weight of the tank plus its full weight of water because of the future hydrostatic testing of each tank. Tank exterior shells should be coated with proper corrosion protective material where the tank shell rests on the foundation. This may be accomplished with a properly saturated pad. The tank should be adequately grounded.

e) The tank valves and other appurtenances should be listed and approved for LP gas use by Underwriters Laboratories, Inc. (UL), Factory Mutual Research Corporation (FM), or other qualified testing facility. The tank pressure relief valves should be in accordance with the specifications of UL or ASME. The vent outlet from such valves should be a minimum of 2150 mm

in height and should discharge vertically upward. The discharge vents should be equipped with a loose rain cap so that it will not restrict the flow of propane vapor through such vent. The rain cap or end of the vent should be installed to direct the discharge vertically upward only. It is preferable to install the pressure relief valves on a multiport manifold so that one valve at a time can be shut off for repair or replacement while the tank is properly protected by the remaining valve or valves which are still in service and cannot be shut off, thus, ensuring full required relieving capacity. The vertical discharge of propane vapor 2150 mm above the top of the container assists in dispersing propane in a general safe manner.

f) Storage tank liquid and vapor operating connections are to be equipped with internal valves. These internal valves function as a primary shutoff valve and have built-in excess flow protection. The valves are to be operated manually at the installed location, or from a remote location via pneumatic actuator. Provide a fusible plug at the valve location to close the valve in the event of fire.

g) The water drain discharge opening of the pressure relief valves must be equipped with a diverter to deflect any product flow when the valve operates away from impingement on the tank or an adjoining tank. This is necessary to prevent a hot spot and a possible tank shell failure if such discharge would become ignited.

h) Each connection to the storage tank should be equipped with an excess flow valve or a backflow check valve as required in NFPA 58 except for the pressure relief valve and openings of 1 mm or smaller. The container should also be equipped with a pressure gauge.

i) Liquid piping between shutoff points should be equipped with a hydrostatic pressure relief valve to relieve the pressure caused by an increase in the liquid temperature resulting in an increase in pressure when the shutoff valves are in a closed position.

j) Accuracy in filling the tanks is important because of the expansion of the liquid as its temperature rises. The

amount of propane that can be placed in a tank over 4550 L water capacity as shown in Table 4-5.2.1 of NFPA 58 is 45 percent of the water weight capacity of the container. Then Table 4-5.2.3(b) shows that at 15.9 degrees C temperature the container can be filled to 88 percent. It is, thus, important to have accurate gauging devices. Such tanks generally have a variable gauge for general inventory control. The gauging devices are generally a float magnetic gauge with an indicator dial to show the percentage full of the contents at different temperatures; however, the gauging devices are not accurate enough to use them for maximum fill control because the float arm may become bent or other malfunction may occur that throws off the accuracy. As a result, a fixed liquid level gauge is required. This is a tube into the tank with the tube length made to extend down to the proper liquid level of 88 percent. There is a small valve with a restricted opening at the outer end. On filling of the container, the operator opens this valve and vapor will flow out during loading until the liquid reaches the bottom of the tube where a white cloud will appear at the outlet valve. This is not liquid propane but rather it is a water vapor cloud which is created when liquid propane expands to vapor and resulting refrigeration condenses the moisture in the air and creates the white cloud as fog. When this occurs, the operator should immediately shut off the flow of propane into the container and then shut off the gauge valve. Generally, at firefighting schools, transport trucks will be used.

k) Propane will be delivered to the containers by transport truck or, in some cases, by tank car. Generally at firefighting schools, truck transport will be used. Truck transports are generally 30 000 to 42 000 L capacity. Usually, such transports are equipped with an unloading pump. In such cases, the unloading hose is connected to the storage unloading station liquid line for unloading. The vapor return hose is also connected to the storage tank vapor line. This connection assists in the liquid transfer as it prevents a buildup of vapor pressure in the receiving tank. The transport might be equipped with a vapor compressor instead of a pump to use for off-loading. Off-loading involves vapor being drawn off the storage tank and discharged into the transport tank which creates a higher pressure differential in the transport tank and thus forces the liquid to flow into the storage tank. When the

liquid has been off-loaded from the transport to the storage, there will be some residual propane vapor in the transport. The vapor is recovered by switching the compressor valving so that it will then draw vapor from the transport and discharge it into the storage tank. This vapor piping to the storage tank should discharge into the liquid of the tank and not into the vapor space. This assists in condensing the vapor to liquid and thus speeds up the transfer. The recovery of the vapor results in an economic benefit.

l) Propane or water may be delivered to the storage by tank cars. In such cases, a proper tank car unloading facility must be installed. The facility should be a platform facility adjacent to the tank car unloading location. The facility should be equipped with liquid and vapor pipe lines and a hose connection at the platform. The hose connection should be of proper length to properly reach the tank car valve dome. There will be two liquid hoses so that a connection can be made to both liquid eduction valves on the tank car. These will be connected to the platform liquid piping at a three-way fitting. At the hose connection to this fitting, a backflow check valve should be installed at each hose connection to prevent backflow into the tank car. The tank car liquid education and the vapor openings on the manhole cover plate are equipped with excess flow valves on the underside of the manhole cover. Hose connections are also equipped with shutoff valves in the protective dome. A pressure relief valve is installed in the center of the protective dome with an opening in the dome cover above the relief valve. The tank car is equipped with a sampling tube extending down from the manhole cover to the sump at the tank bottom so that a sample of the propane or water may be drawn off. There is also a thermometer well extending into the car tank. The thermometer well have an antifreeze solution in it to a height of about 310 mm to provide conductivity of propane liquid temperature to the thermometer when it is inserted in the well.

m) The transport trucks or tank cars should always have the wheels blocked by chock blocks to prevent movement while parked and especially while unloading. The transport truck or tank car unloading point must be equipped with an emergency shutoff valve to prevent a discharge from the storage

tank(s) in case of a pullaway or break of the unloading hose or other equipment. Refer to NFPA 58. The emergency shutoff valve should be installed in the fixed piping between the tank and a substantial bulkhead with hose or swivel-type piping connections on the opposite side of the bulkhead from the emergency shutoff valve.

n) The bulkhead should be substantial and should be of concrete. The piping should be fully anchored to the bulkhead not just by inserting the pipe through a sleeve.

o) Provide emergency shutoff with three modes of operation: manually; remote control; and thermally. A preferable installation can be made which provides both thermal and remote control. The installation entails the running of plastic tubing to strategic points in or near the storage and unloading points pressurized with air, carbon dioxide (CO_2), etc., so that the pressure holds the valve open. Then if there is a fire, the plastic will melt, thus, enabling the valve to be closed. Install the plastic tubing so that it will be activated at all potential points of a flame. Install the tubing at a point where the emergency valve will be activated if there is a flame downstream beyond the bulkhead. For remote control, there may be a snap action release valve at several strategic locations in the tubing so that activation of valves releases the pressure and closes the emergency shutoff valve. The plastic tubing must be tied to the unloading hose so that a pullaway of the hose will break the tubing. In this way, a pullaway of the hose will activate the emergency shutoff valve and close the discharge from the tank storage. The excess flow valves in the transport piping should stop the flow from its tank. If it is a pullaway break, the transport tank valves should always have been closed before moving the vehicle.

p) After unloading the liquid from either a transport truck or a tank car, bleed the liquid propane from the connection after shutting off the valve at both the hose end and at the unloading piping. Many accidents have occurred because such bleeding has not been done. There should be a bleed attachment built into the unloading equipment for this purpose. If the attachment is not provided then bleeding can be done by only partially disconnecting the hose, thus, creating some additional hazards.

Remote shutoff control should be located at the 24-hour duty station and at each fence opening. The truck unloading station emergency shutoff should have a dual control of cable release and remote shutoff.

q) Normally vapors for use will be drawn off of the container from the vapor space above the liquid. Propane boils from a liquid to a vapor at a liquid temperature of minus 42.2 degrees C or above and thus replaces the vapor being used. However, this evaporation creates heavy refrigeration which cools down the temperature of the liquid. If the draw is heavy enough it will result in insufficient vaporization thus requiring the use of a vaporizer to convert the liquid to vapor.

r) There are two basic types of vaporizers. One is the indirect type which is heated by a heating unit remote from the vaporizer. The indirect type should furnish heat by steam, hot water, or other heating medium. The other is a direct-fired type. The standards for vaporizers is detailed in NFPA 58. Many times a pump is necessary to provide the necessary flow from the storage tank to the vaporizer because if the vapor pressure in the storage tank gets low, the proper quantity of liquid will not flow to the vaporizer, thus the need for the liquid pump. The installation should be in accordance with NFPA 58 and should have the electrical equipment in accordance with NFPA 70, National Electrical Code. Waterbath and indirect-fired vaporizers are both acceptable for use at firefighting training facilities. Use an indirect-fired vaporizer when there is a sufficient sized central steam or high temperature hot water heating plant or system available. In this case, the indirect-fired vaporizer would be less expensive than the waterbath vaporizer. Use a waterbath vaporizer when there is no central heating plant or system available. In this case, the waterbath vaporizer would be less expensive than an indirect-fired vaporizer and a new heating plant. No direct-fired vaporizers other than the waterbath type are to be used.

s) When using indirect-fired vaporizers, NFPA 58 applies. FM Loss Prevention Data, Section 7-55/12-28, Liquefied Petroleum Gas apply. In addition, install and design the waterbath vaporizer in accordance with the following:

(1) Waterbath vaporizers should be FM approved.

(2) Waterbath vaporizers should be located to maintain the space clearances as required by FM.

(3) Provide emergency shutoff valves with fusible links. Provide the following emergency shutoff valves in accordance with NFPA 58 and FM Loss Prevention Data:

(a) Liquid propane supply from the truck unloading station to the storage tank.

(b) Liquid propane supply from the storage tank to the vaporizer.

(c) Gas propane supply from the vaporizer. Regardless of which type of propane vaporizer is used, the truck unloading station should be located 23 m minimum from the tank and vaporizer. Refer to Appendix J, Figure J-1.

t) Indirect-fired vaporizers can be located indoors in specially designed vaporizer rooms. Refer to NFPA 58 for requirements. If a vaporizer room is provided then provide a separate propane alarm detection system for the room. This alarm detection system should provide an alarm (sound and flashing warning sign) in the instructor's station at the 24-hour duty desk, and locally at the vaporizer room entrance. Provide a 24-hour battery backup.

In addition to the alarm detection system, for propane vaporizers installed indoors, provide the following safety features:

(1) The exhaust fan should be located near the floor and should vent to the outside with high and low intakes in the door. The exhaust fan should be energized by an on-off switch located outside of the room.

(2) Doors with panic hardware.

(3) A leak detector readout with the readout outside.

(4) A leak detector kit located outside.

u) A totalizing, vapor type meter should be provided at the tank installation, at the vaporizer discharge, to record fuel used at the facility. The fuel system should be sized by

adding the demand rates listed herein for each trainer to be constructed. Flow meter should be a turbo meter with temperature and pressure compensation. Provide meter with digital interface connections.

(1) The propane will be delivered to the individual structures by underground pipe with a single entry to each structure. The propane piping at the site should be routed in a closed loop so as to maintain a constant supply pressure. Do not use galvanized steel pipe for underground installation. Underground pipe and fittings should be carefully coated for protection from corrosion and should be equipped with cathodic protection.

(2) The propane entry should consist of the apparatus and piping as shown in Appendix J, Figure J-2. Install a totalizing consumption meter on the structure side of the "house valve" to record the amount of propane used by that building. The device contractor will tie into the propane entry as shown in Appendix J, Figure J-2. Provide the propane entry outside. A list of valves, fixtures, appurtenances, and controls required for the propane system are shown in Appendix J, Figures J-3 through J-7.

(a) Provide underground piping located under roadways, parking areas, etc., in a vented protective conduit in accordance with API 2510, Design and Construction of LP Gas Installations at Marine and Pipeline Terminals, Natural Gas Processing Plants, Refineries, Petrochemical Plants, and Tank Farms.

(b) Propane piping should be welded and should be provided in accordance with ANSI B31.3, Chemical Plant and Petroleum Refinery Piping, and should be Schedule 80. On existing facilities, propane piping with threaded fittings should be back-welded.

(3) In addition to the above, provide a bank of two gaseous propane strainers with isolation valves at the propane entry for each training structure. The strainer bank should be located upstream from the isolation valve serving the flow meter. Each strainer should be sized and designed as follows:

(a) The propane demand flow rate, L/s.

(b) Stainless steel 1000 kPa basket type in-line strainer with flanged connections and ASME code stamp.

(c) Provide with a 30 micron filter screen.

(d) Support large basket strainers on outside reinforced structural concrete pads. Provide fence with locked gate and warning sign displaying "WARNING - PROPANE. NO SMOKING WITHIN 15 M."

(e) Designed for outside use.

(f) Provide means for cleaning including relieving propane pressure prior to opening the strainer.

(g) A potential manufacturer who can provide this strainer is Stream-Flow-Strainers, Inc., Buffalo, NY, (800) 263-8251, or Haywood Industrial Products Inc., Elizabeth, NJ (201) 351-5400. Other manufacturers are also available.

v) Safety precautions to be observed in handling LP gases:

(1) Smoking and open flames are prohibited in areas of storage tanks, unloading stations, and vaporizer.

(2) Motor vehicles are prohibited from entering the storage area. Motor vehicles should be prohibited from entering or leaving unloading area while transport trucks or tank cars are being unloaded.

(3) Test for leaks with soapsuds and a pressure drop test.

(4) Connect ground wire to tank cars and truck trailers before any unloading or loading operation is started.

(5) Wear rubber (neoprene) gloves when gauging tank cars, truck trailer, and storage tanks and when performing other operations.

(6) Keep vapor or liquid off skin and clothing. Liquid in contact with skin produces the same injury as a freeze burn.

(7) Thorough ventilation is required in buildings, especially at floor level.

(8) Use spark proof tools and explosion proof flashlights.

(9) Open valves slowly. If excess flow valves are closed, they may be opened by closing the line discharge valve for a few minutes, thus permitting pressure above and below excess flow valve to equalize internally through the small hole provided for this purpose, enabling the excess flow valve disk to drop into the open position.

(10) The coefficient of thermal expansion of the liquefied gas is high, therefore, liquid should not be confined in any isolated section of pipe except where a pressure relief valve is provided.

(11) Do not overfill storage tanks. The maximum allowable fill is 80 percent full, refer to NFPA 58 for exact fillage amounts.

(12) Do not pressurize tank cars above the safety valve setting as stenciled on the car. If faulty equipment on the car prevents normal unloading do not loosen or remove car valves under any circumstances. Fill in "Bad Order Tag" and attach to defective car part. Inform firefighting school supervisor of defective car and await further instructions on disposition of the car.

(13) Bleed vapor and liquid unloading and loading hoses before uncoupling from tank cars or truck transports.

(14) Bleed pressure from vapor compressor crankcase before removing oil fill plug.

(15) Before undertaking repairs the container or section of pipe to be repaired must be isolated by closing valves or physically disconnecting the involved section from communicating lines, as the situation warrants, followed by thorough purging with CO2.

(16) Hoses and fittings must be maintained in good order. Damaged or unsafe hoses must be removed from unloading area and must not be used for any purpose.

w) The propane interconnection at the device contractor tie-in point will be a block and vent propane entry as shown in Appendix J, Figure J-2. This interconnection will then meet the requirements set forth in NFPA 54 and also the FM insurance requirements.

x) The two most hazardous events associated with the gaseous fuel burning trainers are the fuel handling operations and the accumulation of unburnt fuel in the trainer. The risk of fuel handling operations is mitigated by strict adherence to NFPA 58, DM-22, and this handbook. The risk should be further reduced by having the receiving and storage systems maintained by the device maintenance contractor or someone experienced with large propane systems. The danger from accumulated unburnt fuel in the trainer is adequately eliminated during the occupied period by a system of ventilation, sensors, and interlocks. During the unoccupied period, the risk is reduced by natural ventilation and the proper operation of the key operated Hands-Off Automatic (HOA) switch in the instructor's station. Proper operation requires air flushing and purging the crawl space prior to energizing the crawl space electrical circuits. (Refer to par. 3.6.4)

y) The maximum fill level (fixed liquid level) gauge on the top of the tank is inconvenient at times to read. Thus, a backup variable liquid level rotogauge may be installed in the center of the tank head. If the float type liquid level gauge is not operating or if you want to check its accuracy, the rotogauge may be used. The rotogauge has a manually operated arm which traces the inside circumference of the tank. When

installed and maintained properly, the rotogauge will give you a true reading.

z) The firefighting training facility will have a 24-hour propane detection system provided by the device contractor. Refer to par. 2.6.a). The facility contractor is required to interface with the detection system via the data terminal cabinet (DTC) as follows:

(1) For 19F series trainers, provide an alarm system to alarm by sound and flashing warning sign at the quarterdeck or other 24-hour duty station. The warning sign should state "DANGER - PROPANE ALERT."

(2) For 21C12 series and Seawolf trainers, refer to par. 3.12 for requirements.

(3) In addition to propane alarms, the 24-hour duty station should be equipped with remote shutoff capability of propane from storage tanks and vaporizers.

2.2.3.2 Natural Gas. Natural gas is largely methane but includes ethane, propane, and butane. It has two disadvantages in regards to its use as a fuel for 19F series devices. First, the device would have to be modified. Natural gas has less than one-half of the Btu content of propane based on heating value of 93 MJ/cu. m of propane and 37 MJ/cu. m of natural gas. Therefore, pipes, nozzles, and other components, would have to be larger to accommodate the increased flow rate. The flame characteristics so important to realism also would be different. Additionally, natural gas is lighter than air, with air having specific gravity equal to 1, natural gas has a specific gravity between .58 and .70. Trainer architectural and safety aspects would have to be redesigned for this lighter than air hazard. Second, tests have not been run to determine the effect that using natural gas would have on the training environment. Therefore, natural gas cannot be used for the device training fires. Natural gas, however, can be used as heating fuel.

2.2.3.3 Oil and Gasoline. Oil and gasoline are no longer preferred as firefighting school fuels. These liquid hydrocarbon fuels produce many kinds of air and water pollution which can only be partially treated at great cost and may not be

acceptable by the local, State, or Federal environmental regulations.

2.2.4 Water

2.2.4.1 Potable Water. Potable water should meet the following criteria:

a) Firefighting facilities based on the 19F and 21C12 series trainers should use fresh water throughout. Salt water cannot be used because of the corrosive effect on the expensive device.

b) Recycled water can be used. Previous tests have indicated that wastewater treatment would be required to provide recycled water. The training structure effluent contains a large chemical oxygen demand (COD) that would have to be removed before delivering it back to the fire field. Refer to par. 5.3.3 for wastewater characteristics.

c) Water delivered to the site should be metered and supplied through a backflow preventer in accordance with AWWA C506, Backflow Prevention Devices--Reduced Pressure Principle and Doublecheck Valve Types. The pressure drop of this equipment must be considered when calculating the availability of water.

d) The range for water or foam pressure at the hose nozzle for the 19F series trainers is 820 to 965 kPa). Submarine trainers (21C12) should also require a minimum nozzle pressure of 820 to 965 kPa. The total discharge head of each pump should allow for hydraulic losses and wear.

e) The water system should be sized by summing the demand and consumption listed herein for each 19F and 21C12 series trainer.

f) During the development of the project, the EFD Code 16 (Utilities Division) should verify a reliable source of potable water. Water usage rates should be determined based on a once-through water system. Water flow tests should be conducted to determine the adequacy of the water supply system.

g) Other than the firefighting water, potable water for drinking and cool-down showers should be supplied to each device structure. The drinking fountain should be a pipe which shoots the water in an arch to a drain and the shower should be an emergency shower. Eyewash showers are not required.

h) Emergency water is defined as water delivered under pressure, over 700 kPa during a power outage. Emergency water is not required for the 19F and 21C12 series trainers because water could not extinguish the fire in an emergency.

i) Due to previous problems of piping failure from bursting under pressure, do not use PVC or other plastic materials for firefighting water piping. Piping should be suitably rated for 2100 kPa.

2.2.4.2 Water Storage. Sufficient water storage should be provided to ensure that the water demand can be met under all operating conditions without starving the pump suction. Water storage should be available on the site or in the vicinity. Water storage should be sufficient to supply the facility needs such that once a class is started (including classroom time), it can be finished. Design the water storage tank in accordance to AWWA standards. Tank should include the following: level gauge, automatic means for filling, vent, manways, OSHA approved ladders, etc.

2.2.5 Wastewater. Effluent from the training structures should be collected in an equalization tank, treated, and pumped at a metered rate into the sanitary sewer system. The ultimate disposal of the effluent should be through a biological treatment process. If the public owned treatment works (POTW) does not incorporate that degree of treatment, the fire facility should biologically treat the wastewater prior to discharging it (refer to Section 5).

2.2.6 Electrical Power. Provide sufficient electrical power in underground conduit to each structure to meet the needs of the building and device equipment, including the computer. Demand quantities are listed herein. Provide spare capacity in both power and control conduits. Separate conduits should be

used for power and control wiring. Spare conduits for the device contractor's use are identified under the respective trainer's requirement.

2.3 Supporting Facilities. Firefighting facilities should have a utilities building and a bulk storage building with an agent bottle refill.

2.3.1 Utilities Building. The utilities building design should conform to the following criteria:

a) The utilities building should have a minimum floor area of 232 sq. m.

b) The utilities building should include water pumps, foam concentrate mixing station, motor control centers, wastewater treatment monitoring equipment, central utility annunciator panel, and a maintenance area.

c) Provide a minimum of two pumps piped in parallel to supply 965 kPa water to the farthest hose. For submarine trainers, provide one full-sized pump for standby when existing potable water pressure is sufficient; when potable water pressure is low, provide two full-sized booster pumps in parallel. Design the pumping system as an industrial process system and not to meet normal fire protection requirements. Provide a flow sensor to turn on the second pump, based on demand. The second pump should be protected from short cycling with a timer which keeps the pump running for at least 10 minutes, regardless of demand. Each pump should be rated for continuous duty and should include a non-slam check valve. The design of the water system should be such that the pumps are protected from "dead head" during erratic demand variations experienced at a firefighting training facility. The method of relieving "dead head" pressure should ensure that the pump cannot overheat during this condition. The pressure relief should be by diaphragm relief valve. Provide a manual lead pump select switch and the lead pump should be started manually. Process water piping serving the hose stations should be painted red. Provide pumps with mechanical seals.

d) Aqueous film-forming foam (AFFF) are concentrates, based on fluorinated surfactants plus foam stabilizers, usually

diluted with water to a 3 to 6 percent solution. The foam formed acts both as a barrier to exclude air or oxygen, and to develop an aqueous film on the fuel surface capable of suppressing the evolution of fuel vapors. The foam produced with AFFF concentrate is dry chemical compatible and thus is suitable for combined use with dry chemicals. At firefighting training facilities, an AFFF surrogate is used in lieu of real AFFF for cost and environmental reasons. The foam surrogate concentrate, Calsoft, Ultrawet K, or equivalent, will be delivered and stored in bulk form. Refer to par. 4.2 for details on AFFF. It will be pumped to the utilities building concentrate mixing tank where it will be diluted with potable water to a strength equal to 100 percent AFFF concentrate. A batch process should be used and provisions for mixing should be included to prepare the solution. The method chosen for mixing should consider the potential foaming problem. The 100-percent solution will be pumped as required to each proportioner holding tank on the fire field. It will also be used to fill 19 L foam concentrate cans for use in the training structures. Carbon steel cannot be used for piping and storage of AFFF surrogates. Acceptable materials are stainless steel and copper piping. AFFF concentrate piping tanks and appurtenances should be painted green. All 6 percent and 3 percent AFFF piping should be painted green and red striped. AFFF pumps should be positive displacement type with internal relief and mechanical seals.

e) An electrical room should be provided in the utilities building to house electric controls and utilities related motor control centers, such as, water, fuel, chemicals, waste pumps, and others.

f) Utility system information, such as pressures, temperatures, liquid levels, run status, and flows should be brought to a central annunciator panel. The fuel information should be sensed indirectly so that no fuel is piped inside the building. Tanks and reservoirs should have level indicator devices.

2.3.2 Storage and Refill. Storage and refill facilities should meet the following criteria:

a) Provide a minimum floor area of 232 sq. m for bulk storage for all trainers, except the 21C12 trainer which should have a minimum of 111 sq. m of floor area.

b) Provide bulk storage for large CO_2 bottles, palletized purple potassium powder (PKP) containers, 19 L cans of foam concentrate, PKP and CO_2extinguishers, and OBA canisters. This storage should be kept from freezing and kept dry. The maximum temperature should not exceed 54.2 degrees C. The layout should consider the handling of material by fork truck. A minimum of 9.2 sq. m of well ventilated space should be provided for filling empty PKP and CO2 fire extinguishers. This area should contain scales and support jigs to facilitate the filling operation which should be done in accordance with NAVSHIPS Technical Manual, Chapter 55, Section 555-4.1.

c) Additional storage may be required for storing of collateral equipment and spare parts. Contact the using activity for requirements.

d) The dry storage and refill areas should contain floor drains which lead to the equalization tanks.

2.4 Other Facilities

2.4.1 P-250 Demonstration. Provide the P-250 demonstration with all 19F type trainers. The P-250 pump cannot be mounted on the 19F4 trainers. P-250 demonstration facilities should meet the following criteria:

a) The P-250 is a gasoline-powered, portable water pump. For demonstration, provide an in-ground sump of a minimum 4200 L along with bleachers for the trainees (see Appendix A, Figure A-15). The sump should have a drain and a 50 mm fill valve. Provide a chain rail for personnel safety. During the demonstration, the pump should take suction from the sump and discharge back to it.

b) When the installation is located inside an enclosed structure, the exhaust from the gasoline engine should be removed. The P-250 pump uses process water for bearing lubrication. This water should be discharged through the exhaust pipe. Provide an exhaust system to carry away the

exhaust including a trapped drain to carry the lubrication water to the equalization tanks. Refer to par. 5.3.3 on pretreatment and equalization tanks. For outside P-250 locations, provide means to drain the lubrication water to the equalization tanks. The lubrication water could contain small amounts of oil and gasoline. The drains serving the P-250 pump should be piped to an oil and water separator for removal of gasoline and oil from the P-250 pump lubrication water. A new P-250 pump has been introduced which eliminates oil and gasoline in the lubrication water.

2.4.2 Wild Hose. Provide the wild hose demonstration with 19F type trainers. The wild hose cannot be mounted on the 19F4 and 19F4A trainers. The wild hose demonstration area should meet the following criteria:

a) The wild hose demonstration area should include access to a 40 mm hose station, 30 480 mm of 40 mm hose, 65 mm to 40 mm adapter, another small section of 40 mm hose, and a 3048 mm high steel pipe column. A section of 40 mm hose should be strapped to the column with 2438 mm hanging loose from the top. The other end of the 40 mm hose section should be at ground level to allow coupling of the longer hose. (See Appendix A, Figure A-13.)

b) The wild hose should be installed outdoors except in extreme climate locations where an enclosed area is a necessity for year-round training. Provide enclosed areas inside training structures with Plexiglas barriers to facilitate viewing the wild hose without getting personnel wet.

Caution: The length of the free end of hose with the nozzle should always be less than the distance to the walls, ceiling, and floor to prevent damage to the structure.

2.4.3 Smoke House. A separate facility for smoke training has not been identified.

2.4.4 Hose Drying Area. Provide a rack for laying out twelve 15 000 mm lengths of hose to dry. It should be located in an open area if possible to take advantage of natural air

movement. Hoses should lay on an angle to promote drainage. Provide one rack per training structure.

2.4.5 Maintenance Contractor Area. The maintenance contractor area should be a work or office type room with a 2450 mm high ceiling to be used by the device maintenance contractor. The minimum floor areas should be as follows:

a) For 19F5, 19F5A, 21C12, and 21C12A trainers, 11 sq. m.

b) For 19F1A, 19F1B, 19F3, 19F3B, 19F3A, 19F3C, 19F4, or 19F4A trainers, 45 sq. m.

c) For other training devices, locate the maintenance contractor area at the utility building or other support building.

2.4.5.1 Room Provisions. Provide the room with the following:

a) Telephone connection

b) Air conditioning, heating, and ventilation

c) 120 volt, single phase, heavy duty electrical outlet

d) Lighting

e) Lockable door

2.5 Interfaces

2.5.1 General. Firefighting training facilities are procured through two separate contracts. The first is a construction contract which provides the training structure, the site development, the supporting facilities, and the utilities. The second is a device contract which provides the trainer, computer, and its related equipment. Everything discussed in this handbook should be provided by the facilities contractor unless indicated otherwise. Two copies of military construction (MILCON) project facility drawings and any changes thereof, and as-builts should be supplied to NAWCTSD when available.

2.5.2 Device Contractor. The device contractor should provide the following equipment:

a) Fireplace mockups

b) Nonfireplace mockups

c) Telltale and obscuration smoke systems

d) Halon and aqueous potassium carbonate (APC) agent simulators

e) Explosive gas monitoring system (propane detectors)

f) Temperature and safety monitors

g) Training and maintenance communication devices

h) Ventilation devices used by the trainee

i) Shiplike labelings

j) Power ventilation necessary to distribute smoke

k) Equipment necessary to "clean up" electrical service

l) Equipment necessary for electromagnetic shielding

m) Special compartment lighting

n) Bulkhead rib insulation (21C12)

o) Partitions in 21C12 instructor's station

p) Flush deck nozzle system (19F4)

q) Bulkhead flapper (21C12 and 21C12A)

r) Red Devil blower and adapter (21C12 and 21C12A)

2.5.3 Facility Contractor. Unless indicated otherwise, device services should be brought to a single point close to the exterior of the training structure. The device contractor should make final connections after the facility contractor leaves the site.

2.5.3.1 Electric. Electrical service designated for the device and computer should terminate in a single-fused disconnect in the electric room near the instructor's station. For those buildings without an instructor's station, the disconnect should be located in a ground-level burner room.

Power for facilities installed equipment, such as, lights and exhaust fans, should be run through a separate, fused disconnect and wired ready for use. This disconnect should be located in a ground-level burner room.

Power provided should be directly from the station or municipal grid system. If the power source needs to be modified or "cleaned up" to protect the computer equipment, the device contractor will provide the necessary equipment.

2.5.3.2 Data Terminal Cabinet (DTC). Exhaust fans, motorized dampers, and motorized valves located in, a trainer should be controlled by individual, HOA switches in the instructors station. The automatic mode should have the necessary relays to be energized by a 24-Vac, 100 mA, binary signal from the future device computer. Wire each relay to the DTC. The DTC should be located in the instructor's station, except the DTC for the 19F4 trainer should be located in the electrical space below the instructor's station. Controls which are recommended to be wired to the DTC should include the HOA switches and relay mentioned above. The 24-Vac relays associated with HOA switches wired to the DTC should be provided with arc suppression protection. The use of non-suppressed relays can produce a large voltage spike which is detrimental to the device computers.

The DTC should include a terminal strip where these controls are wired to unique lugs. Mating lugs on the terminal strip should be ready for the device contractor to tie into to complete the installation. Each lug should be identified by the

facilities contractor by the function connected to it. For typical control interface, see Appendix A, Figures A-18 through A-20D.

2.5.3.3 Fuel. Refer to par. 2.2.3.

2.5.3.4 Fireplace. Areas indicated on the floor plans as fireplace areas should have no floor grating or plate and should be free of any structural members. Acceptable tolerance should be plus or minus 6.4 mm maximum. Provisions for supporting the future device are shown in Appendix A, Figures A-9A and A-9B. Provide a temporary bolted post and chain railing around the opening for safety until the device is installed.

2.5.3.5 APC Extinguishing Agent Simulation. Provide a 40 mm fire water line to the deep fat fryer fireplace and terminate with a globe valve below the floor grating.

2.6 Device. (For information only and does not pertain to the device contract.) The device equipment provided in the trainers consist of the following:

a) Fireplaces should be computer-controlled propane burners hidden in a mockup which is designed to represent the item burning. See Appendix A, Figures A-1, A-2, and A-3. Most fireplaces will be floor-mounted and fed from the crawl space. Fireplaces which are not fed from the crawl spaces, such as: electrical panel, wire bundle, and vent duct fires, should include propane equipment in their electrical cabinets. Each of these cabinets will contain a propane sniffer which will detect any propane which has leaked into the cabinet. There will also be propane sensors on both sides of the wall underneath electrical cabinets containing burners. When activated, this sniffer will shut down its fireplace until the propane is removed from the area.

b) Design device equipment to go through a 914 mm personnel door unless other provisions are made.

c) The artificial smoke generator (provided by the device contractor) is started at the beginning of a training session and runs continuously. Air at 538 degrees C should be discharged from bypass ducts which keep the system at operating

temperature. The unit requires one-half hour at the start to attain operating temperature. When smoke is required, the chemical is injected into the hot air and ducted to the proper location. The building ventilation should remain on even during the application of smoke. The bypass duct should discharge into the ventilation system or be controlled so that no artificial smoke can exit through it. Different smoke generation rates are obtained by relieving air before the chemical is injected into it.

d) The smoke generator should be powered by propane and electricity and located on the ground adjacent to the training structure.

2.7 Gas Chamber

2.7.1 General. Use the gas chamber to provide chemical warfare countermeasures training; it is not part of the 19F and 21C12 series firefighting structure. However, the gas chamber should usually be provided with the 19F5 facility. The chemical agent to be used for training is tear gas. Use the gas chamber to train 1 class of 100 personnel at a time, 2 to 3 classes per day, and 20 classes per week.

2.7.2 Training. Recruits and instructors will enter into the gas chamber wearing the MCU2/P gas masks. Prior to their entrance in the chamber, tear gas is made on a hot plate and is subsequently exposed to the recruits as they remove their gas masks. When gas training is complete, the recruits and instructors march out of the chamber to an area where they can get fresh air. After completion of gas training, an instructor opens the emergency exit/vent doors and energizes the exhaust system to exhaust the tear gas-laden air from the gas chamber. During winter, the instructor will deenergize the heating system prior to energizing the exhaust system. When tear gas has been removed from the gas chamber, the exhaust system will be deenergized and the heating system will be energized, as required. After each use, the gas masks will be sterilized by the recruits by dipping or wiping the masks with a 2 percent iodine and 98 percent water solution. The masks are then rinsed or wiped with water and wiped dry.

2.7.3 Site Development. The gas chamber should be a separate structure and should be located at least 15 m away from any building or facility to prevent the migration of tear gas into an occupied area or building. Consideration should be given to the prevailing wind direction. The gas chamber discharge should be sited so that tear gas is not blown to occupied areas or buildings located downwind.

2.7.4 Architectural. The floor plan for the gas chamber is provided in Appendix H, Figure H-2.

2.7.4.1 Layout. Layout of the gas chamber should conform to the following criteria:

a) The gas chamber should be a 120 sq. m based on inside dimensions, one-story building consisting of a 9144 mm by 9144 mm gas chamber room, a decontamination station, a storage room, and a mechanical room.

b) The building should consist of concrete masonry unit wall construction. Ceiling should be a 2450 mm high gypsum-board type. Protective sealant should be applied to both the walls and the ceiling of the gas chamber room. Sealant should be chemically-resistant to tear gas (vapor and powder) and capable of preventing migration of tear gas and water through the walls and the ceiling of the gas chamber room. Protective sealant should be an epoxy or urethane coating system.

c) There should be means of access to the space above the ceiling, which will be used for maintenance purposes. Access to the ceiling should be via the storage locker or the mechanical room. The doors should be the insulated, hollow metal type. Each door should be provided with a clear 460 mm by 460 mm shatterproof window. There should be no windows in the walls. Provide emergency exit doors with panic hardware.

2.7.4.2 Decontamination Station. Use the decontamination station for sterilizing the gas masks. The decontamination should consist of an iodine-water solution sink for sterilizing the gas masks, a rinse water sink for rinsing the gas masks, and a drying counter or table for hand drying the masks. The sinks and counter or table should be stainless steel.

2.7.4.3 Storage Locker. Store gas masks, tear gas powder or capsules, and collateral equipment in the storage locker separated from the gas chamber. Provide built-in wall storage consisting of pigeon-hole type compartments in the storage locker for storing 200 gas masks with haversacks. See Appendix H, Figure H-2, for detail information pertaining to wall storage.

2.7.4.4 Collateral Equipment. Collateral equipment to be furnished by the station are:

a) Washdown hose and storage rack

b) Hot plates

c) Hot plate counters

d) Gas masks

2.7.5 Plumbing. Provide hot and cold water to the sinks in the decontamination station. Provide floor drains in the gas chamber room and decontamination room. Provide a 20 mm hose bib in the gas chamber room for hose washdown of floors, walls, and ceiling. Drains should connect into piping leading to equalization basin.

2.7.6 Mechanical. Provide a mechanical exhaust and winter heating system for the building (heat the building to 10 degrees C inside. Do not provide air conditioning. The mechanical exhaust system should be separate from the heating system and should be provided for the gas chamber room. The exhaust system should be sized for 60 air changes per hour. A sign should be placed on the gas chamber room wall, near the exhaust system controls, stating, "IMPORTANT - WHEN OPERATING EXHAUST SYSTEM, TURN OFF HEATING SYSTEM AND OPEN ALL DOORS." The exhaust fan should have a non-overloading wheel. The exhaust system should contain a discharge stack to disperse the tear gas high enough into the air above the building to prevent recirculation back into the gas chamber and migration to other areas and buildings. The exhaust system should contain a motorized damper which will be closed during gas training to prevent the loss of tear gas. Do not use an air heating system for heating the building. The heating system should consist of unit heaters or fin tube

radiation. The heating equipment should be designed for water cleaning by hose and should also be able to withstand the accumulation of tear gas powder.

During tear gas training, when the recruits are entering the gas chamber room, the heating will be turned off by the instructor. When recruits are in the gas chamber, the instructor will turn the heating systems back on. The exhaust system will be off throughout the gas training. After completion of gas training, the instructor will turn the heating system off in the gas chamber room, open doors, and energize the exhaust system to rid the gas chamber of tear gas. After exhausting the tear gas out of the chamber, the instructor will turn the exhaust system off and energize the heating system.

2.7.7 Electrical. Provide lighting in gas chamber rooms. Provide waterproof, surface-mounted, incandescent light fixtures in the gas chamber room. Provide three heavy-duty, waterproof wall outlets in the gas chamber room. Two of the wall outlets should be located near the hot plates. Provide a red, rotating beam light outside at the main entrance to the chamber to serve as a warning light during training. A sign should be placed on the building, near the main entrance, stating, "CAUTION - GAS TRAINING IN PROGRESS WHEN RED LIGHT IS FLASHING." Electrical power to the building should be 120/208 Vac/single phase/60 Hz.

2.7.8 Tear Gas Characteristics. Tear gas is available in two forms: powder and powder-in-capsule. Approximately 6.5 to 20 grams of powdered tear gas will be used per class for the gas chamber.

a) Chemical: alpha-chloroacetophenone, $C_6H_5COCH_2C_1$

b) Threshold Limit Value (TLV): 0.3 mg/m^3

c) Melting Point: 59 degrees C

d) Density: 1.324 gram/ml (powder)

e) Vapor Pressure: 1.6 Pa

Section 3: TRAINING STRUCTURE

3.1 Training Courses. The various 19F and 21C12 series firefighting trainers have been designed to support the following courses:

a) J-495-0418 - General Shipboard Firefighting Training Course: Taught in the 19F3 and 19F3A trainers, a 2-day course for a maximum of 108 students in the 19F3 and 60 students in the 19F3A. Students are exposed to Class A, B, and C type fires.

b) J-425-0424 - Advanced Shipboard Firefighting Team Evaluation Course: Taught in the 19F1A and 19F3A trainers, a 2-day course for a maximum of 30 students. Students should locate, identify, and extinguish the classes of fires and communicate with Damage Control Central.

c) J-495-0413 - Shipboard Aircraft Firefighting Training Course: Taught in the 19F4 trainer, a 2-day course for a maximum of 60 students. Students should conduct firefighting and rescue exercises with fixed wing and helicopter crash fires.

d) J-495-0414 - Aviation Facility Ship Helicopter Firefighting Team Training Course: Taught in the 19F4 trainer, a one-day course for a maximum of 29 students. Students should conduct firefighting exercises with helicopter crash fires.

e) J-495-0424 - Advanced Shipboard Firefighting Team Training Course: Taught in the 19F1A and 19F3A trainers, a 4-day course for a maximum of 30 students.

f) A-495-2071 - Submarine Basic Firefighting.

g) A-495-2072 - Submarine Advanced Firefighting.

h) A-495-2073 - Submarine Team Firefighting.

Subpars. f) through h):

(1) The basic course is a 2-day course: 8 hours of classroom and 8 hours of trainer instruction. Maximum class size is 25 students.

(2) The advanced course is a 2-day course: 16 hours of combined classroom and trainer instruction. Maximum class size is 12 students.

(3) The team course is a one-day course: 4 hours of trainer instruction. Maximum class size is 14 students.

3.2 General. Design the training structure to house the various 19F and 21C12 series devices and provide realistic training situations. It should be ruggedly constructed to withstand the temperature cycling from the intense heat of the flame to a stream of cold water from a hose. It should withstand the impact of a high velocity hose stream.

3.2.1 Heat Protection. Building structural components should have sufficient room for thermal expansion. The maximum flame temperature of the device is 899 degrees C when using propane fuel. Assume the products of combustion reach 349 degrees C and an individual compartment may reach 204 degrees C. Any item located in a compartment should be able to withstand the radiant heat or be shielded from it. It takes about 5 minutes for a small fireplace and about 20 minutes for a large fireplace, such as a bilge fire, to return to the starting temperature assuming 2 minutes of cooling water spray.

3.2.2 Personnel Spacing. There will be approximately 1550 mm of spacing between trainees on a hose team.

3.2.3 Weather and Freeze Protection. Weather protection of the training structure should meet the following criteria:

a) Structures should be sufficiently enclosed and heated to allow training in subfreezing weather (where this is a requirement) without adverse effects, such as, ice buildup on grating or doors. Other than for training and water freeze protection, there is no low temperature limit on the structure or associated equipment during off hours.

b) Crawl space should be heated to 4.4 degrees C during unoccupied hours to maintain the structure above freezing. Unit heaters should be used to provide heat.

c) During occupied hours, enclosed staging areas should be heated to 10 degrees C and also should be ventilated for summer heat removal. The staging area ventilation should be the forced type so the pressure there is always above the compartment pressure. This will ensure that the smoke stays in the training compartments.

d) When roof staging areas and second story emergency walkways are enclosed, a 1850 mm by 2450 mm high removable wall panel in the staging area should be provided. This will allow larger equipment to be hoisted during installation and maintenance.

e) Staging areas should drain into the structure to ensure that firefighting agents and rainwater are collected. Staging areas should be provided with trench type drains. Rainwater from roofs does not have to go to the crawl space.

3.2.4 Drainage. The area around exterior trainee entries to a fire space should be provided with an apron which slopes to a drain. The drain should lead to the wastewater treatment system. This apron will collect the firefighting agent used to cool the door prior to student entry and should be large enough for that purpose. If the apron will be subject to collecting rainwater, a pair of post indicator valves should be placed on the drain line; one should lead to the storm drain, the other should lead to the wastewater treatment. It will be the instructor's responsibility to correctly position the valves so the rainwater goes to the storm drain when the structure is not in use and the training water goes to treatment when the structure is occupied.

3.2.4.1 Drainage Piping Material. Because of exposure to heat and AFFF, the drainage piping in the training structure should be capable of withstanding 400 degrees C and should be constructed of either copper or stainless steel. When piping is not exposed to heat, PVC piping can be used.

3.2.5 Escape Trunks. Escape trunks should be 1550 mm on a side and should descend from the roof to the first floor by way of a vertical wraparound ladder. The roof entry should be a small hatch and the lower entry should be an Ellison door. A horizontal safety net should be stretched across the escape

trunk at a maximum of 2450 mm intervals. The safety net in escape trunks should be first quality parachute nylon webbing in accordance with BUSHIPS Dwg. 804-5184163. Webbing should have 800 kg test load and should be waterproof. Borders should have safety snaps for attachment to wall-mounted eyelets. The net should be fastened to the walls so it can be removed for maintenance. Provide a 900 mm by 900 mm opening in the safety net where the ladder passes through. Provide door in escape trunk for access from crawl space area for maintenance. The door should have louvers for ventilation. The escape trunk should be provided with 950 L/s mechanical ventilation with the supply air coming from the crawl space. Refer to par. 3.11.9.2.

3.2.6 Consumables. Each 19F and 21C12 series trainer was designed to handle a specified student loading as indicated herein. The training schedule and demand and consumption of consumables are also indicated. When the student loading of a proposed project differs substantially from the indicated values, the design demand and consumption may be proportioned up or down to suit the project.

3.2.7 Burner Rooms. Burner rooms should have a minimum ceiling height of 2134 mm and a floor level with the crawl space floor. The device contractor will provide necessary hardware for mounting and maintaining training components away from air intake louvers. For access into the burner room where a change in elevation occurs, provide stairs with a landing and railing.

3.2.8 Obstructions. Provide obstructions where they are indicated on the floor plan drawings in the appendices. Obstructions should be constructed of 4.8 mm steel plate, making a solid top and sides and having an open bottom. Obstructions should be bolted to the floor grating from underneath in such a way that they can be positioned anywhere in the room.

3.2.9 Separation Chamber and Piping Traps

a) Effluent coming from a fire training structure should dump into a separation chamber. The primary purpose of the chamber is to separate the propane which accumulates in the pipe peripheral air space from the remainder of the wastewater piping. The chamber should be open at the top or covered with a 150 mm diameter vent pipe. The inlet should be valved with a

lockable post indicator type valve, and should be high enough above the outlet invert so the influent can fall even in freezing weather. The inlet should be baffled. Both inlet and outlet should terminate inside the chamber with a pipe flange and sufficient room for a future pipe fitting. The outlet should be a dip tube which draws from the bottom of the chamber. A running trap should be provided in the outlet line adjacent to the chamber (see Appendix A, Figure A-16 for separation chamber detail).

b) "NO SMOKING" signs should be posted facing all directions around the separation chamber since it is a source of propane.

c) No traps should be provided in the piping leading from the crawl spaces. Floor drains leading from other spaces in the training structure should have vented traps or should tie into the wastewater line upstream of the separation chamber running trap. This precaution will prevent propane migration through the piping.

3.2.10 Fireplace Compartment Dimensions. Dimensions given for fireplace compartment sizes are inside clear dimensions. These inside clear dimensions are critical and should be maintained; allowable tolerance should be plus or minus 6.35 mm maximum. For example, if a fireplace compartment has refractory coatings and steel plate liners on the walls, then the inside clear dimensions are from liner to liner of the walls.

3.3 Repair or Crash Lockers. Each structure, except the 21C12 and 21C12A trainers, should have at least one repair locker to house the paraphernalia required for firefighting. Unless indicated otherwise, repair lockers should be 3048 mm on a side with a 2438 mm sloping roof and gutter. Repair lockers should have natural ventilation at floor and roof and should have a floor drain. Hollow metal doors should be used on repair locker entries. The following repair locker equipment should be provided by the respective training school:

a) Damage control plotting board to track status of the fire and extinguishment process

b) OBA canisters and OBA's

c) CO_2 bottles

d) PKP bottles

e) Repair parts

f) Nozzles

Crash lockers should be the same as repair lockers.

3.4 Doors and Hatches. Various types of entryways defined here are used throughout firefighting training structures. Doors used for emergency exits should be adequately marked and should have panic hardware.

3.4.1 Watertight Doors. Watertight doors should be provided in accordance with NAVSHIPS Dwg. 805-1400066, galvanized steel with three dogs unless indicated otherwise, see Appendix A, Figure A-12. Refer to NAVSHIPS Dwg. 805-1400074 for details of airtight doors. Airtight doors as shown on NAVSHIPS Dwg. 805-1400074 can be used in lieu of watertight doors since submergence in water is not a requirement. Airtight doors are a good simulation to watertight doors. No hasp assembly is required. Three dogs are used instead of eight because the door will warp when subjected to heat and many of the dogs would not work. Since the door will have to be replaced periodically because of warping, it is desired to keep the door as inexpensive as possible. Quick-acting watertight doors should be a watertight door provided with a single lever to operate the three dogs at once. Refer to Appendix A, Figure A-7. Quick-acting, airtight doors should be provided in accordance with NAVSHIPS Dwg. 805-1400074.

3.4.2 Hollow Metal Doors. Hollow metal doors should be standard exterior doors with standard door knobs. Panic hardware should be used on doors labeled "Emergency Exit." Typically, doors should be 900 mm wide except that doors to instructors' stations, burner/electrical rooms, and electrical equipment rooms should be 1200 mm minimum width doors to allow for equipment access.

3.4.3 Wire Mesh Doors. Wire mesh doors should be constructed of 38 mm angle steel with 9.5 mm by 12.7 mm steel wire mesh fastened to it.

3.4.4 Automatic Closing (Ellison) Doors. Automatic closing (Ellison) doors should be in accordance with NAVSHIPS Dwg. 803-5184129. Refer to Appendix A, Figure A-8. Ellison doors are nonwatertight, steel, balanced doors which close automatically by the action of an internal spring. Ellison doors should be shielded from the radiant heat of the fireplaces. The door should be 900 mm wide. These doors are considered to be proprietary and are provided by Ellison Bronze Co., Inc.

3.4.5 Large Hatch. A large hatch should be provided in accordance with BUSHIPS Dwg. 805-1624089. This hatch should be 900 mm by 1550 mm with six wrench-operated dogs, spring-balanced and should include a 635 mm, quick-acting, spring-balanced, raised scuttle.

3.4.6 Small Hatch. A small hatch should be provided in accordance with BUSHIPS Dwg. 803-1645097. This hatch is 900 mm by 1070 mm raised, oval, quick-acting, and spring-balanced. It should include 330 mm diameter handwheels on both sides which operate four dogs. Provide safety chains or rails around the top of hatches.

3.5 Ladders

3.5.1 Inclined Ladders. Inclined ladders should be designed in accordance with NAVSHIPS Dwg. 805-1749113. The weight of the ladder should be supported from floor beams instead of deck grating. The slope of the ladder should not exceed 60 degrees from the horizontal and unless indicated otherwise, should have landings at either end with a minimum of 1070 mm clear space. When the ladder rises more than 6100 mm of vertical height, an intermediate landing should be provided in accordance with OSHA.

a) The top tread of an inclined ladder should be 225 mm wide and start 51 mm away from the deck cowling. Other treads should be 150 mm wide. Non-slip treads, within wet conditions, should be used exclusively. Head room clearance

anywhere on the ladder should be maintained at 2150 mm in accordance with OSHA. The inclined ladder should be constructed of hot-dipped galvanized steel.

b) Where an inclined ladder passes through a crawl space, an airtight barrier should be provided so the crawl space air cannot enter the inclined ladder space.

c) Where the inclined ladder leaving Compartment 1 passes through the first floor concrete ceiling, it should be surrounded by a barrier. The barrier should be tight to the ceiling and extend into the compartment to 2150 mm above finished floor. This barrier will keep any products of combustion higher than 2150 mm from entering the inclined ladder space.

3.5.2 Vertical Ladders. Vertical ladders should be designed in accordance with NAVSHIPS Dwg. 804-1749235. Following standard shipboard design, the wraparound ladder rungs should be 177.8 mm from the wall. The rungs should be of serrated 316 stainless steel to provide a nonslip surface. A 0.83 sq. m opening should be provided in the safety net where the ladder passes through.

3.6 Lighting and Electrical

3.6.1 General Lighting. General lighting should be provided for each space in a firefighting structure using appropriate building type fixtures and switches.

The fireplace areas should use indirect lighting from the crawl space areas. The fixture should be wall mounted at 900 mm above finished floor (AFF), facing outward or with a (25 degree) stanchion. Luminaires should not be floor mounted, facing upward. Provide a fixture similar to that shown in Appendix A, Figure A-22. Specify the particular type and lamp wattage appropriate for the design (Type 1 or 2). Luminaires should meet Underwriters Laboratories Inc. (UL) 595, Marine-Type Electric Lighting Fixtures, for marine locations. A globe guard should be provided. The above requirements will: (a) protect the fixtures from heat and direct spray of the water; (b) allow for the water to drain away from the fixture; and (c) avoid letting water penetrate the fixture and conduit

system. These lighting levels are not intended for use with training personnel. The lights in the crawl spaces are only intended to aid and supplement maintenance and inspection personnel who carry individual task lighting. Provide approximately 53.8 Lx of illumination level. The light switches associated with the crawl space lights should be located outside the entryway(s) for the compartments.

It is requested that the following requirement be added to the operation and maintenance support information (OMSI) for the facility:

Perform monthly inspection of the two gaskets (ballast and globe) associated with each fixture. Replace gasket when deterioration is evident.

Staging areas should be provided with general lighting for nighttime operation.

3.6.2 Special Compartment Lighting. Special compartment lighting should be provided for use by the trainee and should be provided and controlled by the device contractor.

Every attempt should be made to minimize the length of conduit in the compartment. When conduit is run in the compartment it should be shielded from the fire and water spray and should contain wire with high temperature insulation suitable for greater than 260 degrees C. High temperature wire should be in accordance with Military Specification MIL-W-25038, Wire, Electrical, High Temperature and Fire Resistant, Type 1.

3.6.3 120-Volt Alternating Current (Vac) Convenience Outlets. The 120-Vac convenience outlets should be provided in the crawl spaces, burner rooms, and instructor's station.

3.6.4 Electrical Interlocks in Crawl Space and Burner Rooms. The electrical interlocks in crawl spaces and burner room should meet the following criteria:

a) Provide a lockable, key operated HOA switch in the instructor's station to disable lighting circuits, receptacle circuits, and power circuits in the crawl space(s) and burner room(s). The HOA switch should be wired to the DTC in the same

manner as the other HOA switches. After the device is installed, the computer will interlock these circuits with the ventilation such that they remain deenergized until after a preset purge time. The computer will deenergize these circuits again at the end of the occupied time. The HOA switch should remain locked in the automatic mode after the device is installed. Provide a minimum of one HOA switch for each burner room and crawl space; (two total) for the 19F5 or 19F5A; provide one for each 19F3 or 19F3B building (four total); (one total) for the entire 19F1A or 19F1B building. The key operated feature of this switch should prevent accidental changing of the position and the key should only be in the possession of the senior person in the instructor's station. The positions of this switch function are as follows:

(1) Hand - The fans must be operating for a preset time of 3 minutes before the power and lighting circuits noted above can be energized from this position. Prior to the installation of the trainer device, this position is used to provide light and power for construction and testing work in the crawl space. After installation of the trainer, this position can be used to provide utilities for normal maintenance work or to provide power and lighting in the event of a computer malfunction.

(2) Off - Power and lighting circuits deenergized.

(3) Automatic - The computer starts the purge cycle by operation of the ventilation fans and checks the sensors in the crawl space and central cabinets containing propane piping prior to energizing the power and lighting circuits. Exact sequence and timing of this operation is completed by NAVAIRWARCEN Training Systems Division at the time the trainer device and the computer are installed. The switch will then be locked in the automatic position.

b) Crawl space should contain propane burners, piping, valves, and regulators. As discussed above, the ventilation system will be interlocked with the main propane valve. Propane will not be introduced to the trainer until the

crawl space is purged. In addition, the crawl space will contain propane detectors (provided by the device contractor) which will prevent the introduction of propane if 10 percent of the lower explosive limit (LEL) of propane is detected in the crawl space or burner rooms.

c) Electrical receptacles, lighting fixtures, and other electrical equipment in crawl space and burner rooms should normally be deenergized and can be energized only after the above interlocks are satisfied.

d) The crawl space exhaust fan and power enable controls should include the following features:

(1) Detect fan run status via a differential pressure sensor.

(2) Detect a closed damper (with fan running) via a differential pressure sensor.

(3) Transmit the analog fan differential pressure to the device computer.

(4) Turn off fan upon detection of failure or closed damper.

(5) Indicate when fan fails to respond to a control action.

(6) Latched fan start circuit in hand control mode (upon restoration of power after a failure, fan will be off).

(7) Use the fan status in purge timer interlock with crawl space power. Timer interlocks should be provided with adjustable settings from 0 to 30 minutes, and set at 3 minutes.

(8) Indicate when crawl space power enable fails to respond to a control action.

(9) Crawl space power indicator light.

(10) Latched crawl space power enable circuit in hand control mode (upon restoration of power after a failure, crawl space power will be off).

3.6.5 Alarm for Loss of Electrical Power. (For all trainers.) Provide a battery backup annunciation and alarm at the 24-hour duty desk and the instructor's station which will activate in the event of an electrical power outage at a trainer. Capability to silence the alarm should be provided at both locations.

3.7 Floors. There should be five types of floors in a fire training device structure: a training floor, a staging floor, a crawl space floor, a maintenance floor, equipment floor, and a computer room floor. Consider Occupational Safety and Health Administration (OSHA) requirements for walking surfaces. Floors should be designed for a floor loading of 292.8 kg/sq. m except for the computer area, which should use standard computer floor design, and the deck surrounding the fireplace of the 19F4 and 19F4A. Additional support should be provided by the device contractor to mount any equipment which exceeds the indicated loading.

3.7.1 Training Floor. The training floor is the floor inside the fire compartment that the trainees walk on. This floor should be steel grating to give sure footing, good distribution of ventilation air which comes from below, and instant removal of firefighting agents. Unburned propane can be introduced into the compartment during flame suppression; therefore, even distribution of ventilation air is important to dilute it and flush it away. This floor should be supported from the crawl space floor below and the walls. Grating should be made of mild steel and should be hot-dipped galvanized with a maximum vertical depth of 25 mm and holes that are 19 mm by 50 mm maximum, from centerline to centerline. Benefits of high temperature steel grating material are not cost effective in the firefighting facilities. A nonskid surface should be provided on the grating. Grating should be sectionalized and securely fastened so it can easily be removed for maintenance. Two men should be able to handle each section. Refer to par. 3.7.6 for additional requirements for grating. The training floor should meet the following additional criteria:

a) Floor support steel should be indirectly attached to the walls and crawl space floor to allow room for thermal expansion. Connections should have slotted bolt holes to allow for thermal expansion. Floor support steel should be hot-dipped galvanized.

b) Areas designated as fireplace locations should be free of lights, equipment, flooring, and floor support members. The perimeter of the fireplace area should be designed, as shown in Appendix A, Figure A-9, to support the future device mockup around its perimeter. Fireplace support should be 70 mm below the trainer floor. Since this area will remain open until the device contractor installs the mockup, a temporary post and chain railing should be provided around the perimeter.

Design Note: Drawings should show locations of sectionalized grating. Grating sections should be dimensioned and sized on drawings. A note should be provided on drawings to indicate the contractor should use the dimensions given as a guide only. Adjoining grating sections should match and be at the same elevation.

3.7.2 Crawl Space Floor. The crawl space floor should be located directly under each training floor. Each crawl space floor should be at or above grade for safety reasons. It should be constructed of concrete. The functions of the crawl space floor are to collect agents which come through the training floor grating, to separate training compartments in the case of two-story structures and provide a platform for the maintenance of burner and sensor equipment. The crawl space floor should have chamfers where the walls meet the floors. The cants should be 150 mm high and 150 mm wide.

a) Where the crawl space floor meets any wall, provide a 150 mm high by 150 mm wide cant strip, fillet or curb. The purpose of this cant strip is to prevent propane gas from accumulating in the corners of the floor or wall interface. The cant strip will allow the propane gas to flow away from the walls.

Caution: Wastewater piping leading from a crawl space should be routed to a separation chamber prior to discharging into the piping leading to the propane in the piping. The separation chamber should be provided as shown on Figure A-15 of Appendix A.

b) There should be 1372 mm of clear space between the structure of the training floor and the crawl space floor, unless noted otherwise. This area should remain clear of obstructions to allow for burner tubes and burner equipment. The perimeter of the crawl space should be as open as possible for burner tube installation and access to ventilation air. However, for heating, ventilating, and air conditioning (HVAC) equipment placement, ductwork, and piping runs in the crawl space, should be limited to a space 600 mm wide above the louvers, along the exterior wall. Space in front of the crawl space louvers should not be used, since it is the path of the ventilation air. In addition, the heated supply air duct for cold weather trainers can be located outside.

c) Personnel access should be provided to crawl space areas. Ground level accesses should be ramped to facilitate dolly traffic.

3.7.3 Staging Floor. The staging floor is the area where the students are organized before starting a firefighting sequence. The staging floor can be made of concrete or grating. The concrete design should have generous slopes to channel away water and collect it for treatment. If the area is exposed to the rain, the collection piping should be configured to allow rainwater to bypass the treatment system. The staging floor should be designed to meet the following additional criteria:

a) A catchment should be provided by each trainee door to ensure that the agent used by the trainee to cool the door is directed to the treatment system. Rainwater should be handled as stated above.

b) When the staging area is above a fireplace compartment, as in the case of roof staging, the flooring must be separated from the heat generated in the space below. Galvanized steel grating should be provided in these areas. The grating floor should be at least 508 mm above the concrete

ceiling of the fireplace compartment. This concrete ceiling should be sloped to drains located above each fireplace compartment.

c) Trench drains should be provided.

3.7.4 Maintenance Floor. The maintenance floor is used in the electrical rooms and should be constructed of concrete with no covering.

3.7.5 Computer Floor. The computer floor is a raised computer deck conforming to MIL-F-29046, Flooring Raised, General Specification for. Twelve inches of clear space should be provided under the decking. This flooring should be used in the instructor's station(s). The adjacent electrical room does not require a raised computer deck.

3.7.6 Grating Floors and Platforms. For grating floors and platforms located outside, provide galvanized steel grating with a non-skid surface. Grating should be hot-dipped galvanized, open type, 25.4 mm by 4.7625 mm bars, welded with section modulus of 5625 cu. mm, moment of inertia of 71,552 mm^4, and maximum weight of 36.112 kg/sq. m.

3.8 Walls. Walls around training compartments should resist thermal cycling from 538 degrees C in the fire area to the coldest ambient temperature at the site, plus the effect of cold water applied during the extinguishment of the fire. Walls should not be porous because, in colder climates, the wetted wall could be damaged when the water freezes. Walls should withstand the mechanical stress of a stream of high-pressure water.

3.8.1 Wall System. Walls directly behind the cable raceway, electrical panel, trash can, storage compartment, and dryer fireplaces should not have columns in them and the crawl space directly below should also be free of columns. Holes up to 0.18 sq. m will be cut through the walls in these areas by the device contractor. Holes any larger will be structurally reinforced by the device contractor.

In addition, walls surrounding fireplaces should be lined with a steel panel. The panel and its supports should

allow for thermal expansion. Weathering steel (ASTM A588/A588M, Standard Specification for High-Strength Low-Alloy Structural Steel With 50 psi (345 MPa) Minimum Yield Point to 4 in. (100 mm) Thick or ASTM A242/A242M, Standard Specification for High-Strength Low-Alloy Structural Steel should not be used because the rust is not self-limiting in this application. Steel liners protect the refractory coating from the effects of the water spray and raise the training compartment temperature by reflecting the heat back into space.

a) The refractory system should be a one-inch thick calcium silicate board like "Westtemp" as manufactured by Fire Facilities, Inc. of Antioch, IL.

3.8.2 Windows. Windows should be provided in training compartment walls as shown on the floor plans in Appendix B, Figures B-3 and B-4; Appendix C, Figures C-2 and C-3; Appendix D, Figures D-1, D-2, and D-3. These windows provide a means for spectator viewing. Windows should be 139 sq. m be made of heat strengthened glass, and have hinged, sheet metal covers on the outside.

3.8.3 Cool Down. Walls adjacent to fireplaces will probably overheat, so a method to cool them down between training exercises should be provided. The preferred method is a water spray system consisting of nozzles and a motorized valve wired back to the data terminal cabinet, which will have manual control. The motorized valve should have a manual bypass which will be used for the trickle cooling flow control. Nozzles should be located so that water dripping from them will not detract from the training. These nozzles and their piping will require an adjustable flow rate of water to maintain a trickle to protect them from the heat.

The main purpose of the cool-down system is to provide cooling of the wall and ceiling steel plate liners after a training scenario. The spray nozzles are controlled by a solenoid valve via the DTC/device computer. There should also be manual control by the hand/off/automatic switch. Dripping is accomplished by a manual bypass globe or needle valve. This valve bypasses the solenoid. The spray nozzle should be open type, stainless steel (316 SS) with 125 degree spray pattern, 10 mm orifice. Install cooling nozzle in pendant position.

Cooling spray nozzles should be directed horizontally or 30 degrees down from the horizontal and towards the wall at the fireplace with the spray hitting ceiling and wall liners. The nozzle should not be located over fireplace openings because the constant water drip is not desired over the device equipment. A minimum flow of 1.893 L/s is used for each nozzle.

Note: NAVAIRWARCEN Training Systems Division has the final say as to the location of these nozzles. They do not want direct spray onto their device equipment. They may require some of the nozzles be relocated during their facility (construction site survey) inspections. Some of the manufacturers that can meet the above requirements are:

Spraying Systems Co., (312) 665-5000
Bete Fog Nozzle, Inc., (413) 772-0174

3.9 Roofs and Ceilings

3.9.1 Training Compartment Ceilings. Ceilings in the training compartments should be constructed of reinforced, lightweight concrete with a refractory coating of sprayed on calcium aluminate cement. No alternates are acceptable. When a steel false ceiling is required, it is to help control trainer compartment heat and to protect the refractory coating.

3.9.2 Staging Area Roofs. Roofs over staging areas should protect trainees from the elements, such as the hot sun in the south and the snow in the north. Staging areas should have a roof.

In those structures where the roof access enters the fireplace compartment directly, the access way should be shielded to impede the escape of hot gases. The shield should be constructed of steel plate which should form a rectangular box. The box should surround the inclined ladder. The bottom edge of the box should stop 2000 mm above the training floor in Compartments 1 and 2 of the 19F1A and 2750 mm above the floor in the 19F3-B1 structure. The forward side of the box should be far enough in front of the ladder so a person descending the ladder cannot bump his head. The shield should be airtight where it meets the ceiling.

3.10 Instructor's Station and Electrical Space. Each 19F series trainer has its own instructor's station which, along with the adjacent electrical space, houses most of the electronic equipment associated with the device. Operations of buildings associated with a given device are controlled from the instructor's station. A single point ground plate is required for trainers. Grounding plates are required in the instructor's station and its accompanying electrical room under the raised computer room flooring. The instructor's station and electrical space should be waterproof from the outside weather.

3.10.1 Air Conditioned Space. The instructor's station and adjacent electrical space should be designed as an air conditioned office. When the instructor's station is adjacent to a training compartment, it should be thermally insulated from it, including structural members.

3.10.2 Temperature and Relative Humidity. Environmentally control the instructor's station and the adjacent electrical room to 25.5 degrees C and 50 percent relative humidity in the summer and 20 degrees C and 30 percent relative humidity in the winter. Wintertime humidification and reheat for summertime dehumidification is not a requirement. In accordance with NAVFAC MIL-HDBK-1012/1, Electronics Facilities Engineering, dehumidification should not be provided in the air conditioning unit for an electronic equipment space. The instructor's station and adjacent electrical room should be individually controlled by independent thermostats.

3.10.3 Fire Protection. A fixed, fire protection system is not required for the instructor's station or the adjacent electrical space. However, portable CO_2 extinguishers should be provided by the facility contractor. Refer to par. 4.4 for the requirements of portable CO_2 extinguishers.

3.10.4 Window Glass. The window glass size and location should be as indicated in the specific device sections. Glass should be the insulated, shatter-resistant type. The bottom of the window should be 900 mm above the floor.

3.10.5 Plugged Tap. Each instructor's station will have an analog pressure indication for the firefighting water supplied

to the structure. Its location should be clearly indicated on the facility drawing. The sensor should provide the analog pressure signal to the gauges in the instructor's station and should have a DTC connection.

3.11 Ventilation

3.11.1 General. The facility exhaust system serves three main functions:

a) Continuously purges the structure of unburned fuel;

b) Provides the secondary air necessary for complete combustion and realistic fire characteristics; and

c) Collects products of combustion for possible treatment.

Ventilation air should be induced into each building by the exhaust fans. Provide air test ports throughout the system for testing and balancing. Burner rooms should be ventilated to control heat buildup and to cool the room for summer temperature control. Ventilation flow rates (L/s) come from NAVAIRWARCEN Training Systems Division and fleet project teams. Provide details on how to seal space around high temperature ducts at wall, floor, and roof penetrations. High temperature exhaust fans should have total enclosed fan cooled motors, when located outside in the weather.

3.11.2 Purge. Purging of the facility exhaust system should meet the following criteria:

a) Ambient air should enter the building through louvers in the crawl space perimeter. When there is a burner room adjacent to the crawl space, the crawl space perimeter should be left open to the burner room and the louvers located in the burner room exterior wall. The building design should allow free air movement in the burner room and crawl space and prohibit the possibility of any stagnant air spaces where unburned fuel could accumulate. Fuel is heavier than air and could create an explosive situation if not flushed away.

b) Purge air should flow at the full design rate.

3.11.3 Combustion Air. The exhaust system should deliver sufficient air to allow complete combustion. In the case of propane, it takes 23 parts of air for each part of fuel for theoretical complete combustion. Device burners do not provide any primary air therefore combustion air must be provided by the facility ventilation. In addition, enough excess air must be delivered to provide realistic flame characteristics. When a fuel is burned in the open, the flame induces into it approximately 10 times the air needed for perfect combustion. The trainer should be capable of providing this air to produce a natural looking fire. This excess air should enter the compartment at low velocity and not be directed at the flame.

3.11.4 Exhaust. The exhaust system should be designed to conform to the following criteria:

a) Once inside the compartment, the air should be heated, collected at the ceiling, ducted to a common point then to the exhaust fans and then to the treatment if necessary. The duct and fan layout should allow for the future addition of a pollution control device. Every attempt should be made during the design of the structure to ensure that air is collected and leaves the structure through the exhaust system. Minimize leaks. Roof entries provide another escape path for the products of combustion and should be ducted into the exhaust system through manual dampers.

b) Each training compartment should have a separate duct to carry away the products of combustion.

c) The exhaust stack should be designed to have a height of 1.4 to 2.0 times the training structure height, which would eliminate short circuiting and contamination of fresh air entering the trainer. The stack should be designed to meet the American Conference of Governmental Industrial Hygienists (ACGIH) 2080, Industrial Ventilation, A Manual of Recommended Practice.

d) A low velocity area should be provided prior to the exhaust fan inlet to allow the PKP particulate to settle

out. The duct system should have provisions for cleaning out the PKP particulate which will settle out. Access doors and low velocity areas should be used in long horizontal runs and at the base of vertical runs. Provide a 50 mm trapped drain in the duct section.

3.11.5 Dilution Air. Dilution air should be required to protect the compartment environment from a buildup of products of incomplete combustion, unburned fuel, and heat. Air specifically for dilution is not needed. This requirement is satisfied by secondary air.

3.11.6 Equipment

3.11.6.1 Louvers. Louvers should run continuously around the perimeter of crawl spaces. They should be sized for a maximum pressure drop of 25 Pa at the design "air in" flow and be a minimum of 460 mm high. Louvers should be of corrosion-resistant material and designed so they can be removed individually for maintenance. Louvers should be designed to meet the following additional criteria:

a) In areas where snow accumulation can be expected on a regular basis, the design of the louver system should prevent drifting snow from blocking the openings.

Caution: The structure should never be operated with any portion of louver openings blocking the free entrance of air. Unburned propane could easily build to the LEL in pockets if ventilation is impeded.

b) In climates where the annual heating degree days are greater than 1093 degrees C, perimeter louvers should be provided with motorized dampers. Motorized dampers allow the crawl space to be closed during unoccupied hours so the crawl space can be maintained above freezing.

3.11.6.2 Dampers. Where more than one compartment is connected to the exhaust fan system, the air from each duct should be controlled by a motorized, modulating, floating point damper from the instructor's station. In the "automatic" mode, the damper should be controlled by the device computer. In the

"hand" mode, the damper should be controlled by an open-stop-close pushbutton set. The damper should be capable of infinite positioning in either mode of operation.

a) Motorized dampers connected to the DTC in the instructor's station should be provided with a positive feedback control. Damper position status should be provided in the instructor's station. Floating point dampers should be provided with a modulating control output and the two position dampers should have binary control. See Appendix A, Figures A-18 and A-19.

b) Variable speed motor should be provided for the primary fan in each system, so the fan can be economically turned down during periods of no fire. This control would operate from reduced flushing flow to fully open when directed by the device computer. Any control used should have the following requirements:

(1) Modulation controls should have positive feedback and interface with the DTC.

(2) Exhaust fan controls should provide means to indicate in the instructor's station the following status:

Fan on-off condition
Damper position
Fan modulation - rpm (only if variable speed control is used)
Alarm air temperature
Exhaust air temperature

(3) The exhaust system should be provided with safety warning signs to indicate personnel hazard from heat of ducts.

c) A manual damper should be located in the duct leading from all compartments so the maximum exhaust flow from that space can be limited.

d) Dampers should be designed for high temperature operation at 538 degrees C. High temperature dampers should be constructed of stainless steel, same material as the ductwork.

Bronze bearings should not be used in high temperature dampers. Bronze bearings have a maximum temperature rating of 149 degrees C. Other bearing materials which should not be used in high temperature dampers are: nylon, Teflon, and stainless steel. The following bearing is acceptable for use with 538 degrees C high temperature dampers:

MATERIAL	BEARING TYPE	MAXIMUM TEMPERATURE RATING DEGREES C
Carbon and/ or Graphite	Sleeve	538

e) Dampers should be electrically operated and should be installed in the exhaust ductwork outside of the training compartment. Damper actuators for high temperature dampers should be accessible for maintenance.

f) Dampers should have a quick opening and closing time. The maximum time of operation of the dampers from any position to another position should be 15 seconds.

3.11.6.3 Fan. The exhaust system for each building should be sized to pull approximately two times the "air in" rate due to volumetric expansion of the heated air. These values are listed in Table 1 entitled "Main Ventilation Air for Fireplace Compartment" for each structure. Design temperature for flow calculations should be 315.5 degrees C. The design temperature for materials should be 538 degrees C. The fan and the exhaust system should meet the following criteria:

a) The exhaust system should consist of at least two fans totaling 100 percent of the ventilation requirement. The exhaust system should be designed for operation at 538 degrees C and should be provided with high temperature expansion joints suitable for operation at 538 degrees C in lieu of flexible duct connectors. The exhaust system ductwork should be constructed of low carbon stainless steel, 304L or 316L. Carbon steel should not be used because of high temperatures; the corrosion rate is increased and its structural strength is reduced due to the segregation of carbon. Ductwork design pressure should be noted on the drawing and should be based on the addition of the following:

(1) Maximum suction pressure of the exhaust fan at no flow conditions.

(2) Wind loads.

(3) Live load of 100 kg/sq. m on the top of horizontal exterior duct and inside horizontal duct areas of access.

(4) Interior horizontal duct loading of 14 g dust/(System L/s) equally distributed across the duct system horizontal surfaces.

(5) High temperature ductwork should be designed and constructed in accordance with Sheet Metal and Air Conditioning Contractors' National Association, Inc. (SMACNA), Industrial Duct Construction Standards and ACGIH, Industrial Ventilation Guide. Ductwork should be welded. Welding procedures should be carefully specified and should be either American Society of Mechanical Engineers (ASME) or American Welding Society, Inc. (AWS) and should incorporate pure argon shielding gas. Suitable procedures are described in AWS B2.1.005, Standard Welding Procedure Specification (WPS) for Gas Metal Arc Welding of Austenitic Stainless Steel (for austenitic stainless steel) and AWS B2.1.006, Standard Welding Procedure Specification (WPS) for Gas Metal Arc Welding of Carbon Steel to Austenitic Stainless Steel (for carbon steel to stainless steel), except use pure argon shielding gas. Procedure AWS B2.1.006 is used for welding the duct to any structural support member. Use a low carbon and low hydrogen welding rod.

b) Several factors should be considered in the selection of a fan type. The fan horsepower and energy consumption should be as low as possible. Motors for exhaust fans should be sized for the lowest outside ambient temperature. The fan should be able to ride the fan curve to 50 percent of its design flow rate without adverse effects.

c) Noise is a consideration. A fan should be chosen for quiet operation and located in a sufficiently remote area so as to not interfere with training.

d) Manually adjustable inlet dampers should be provided for flow adjustment and segregation for maintenance.

e) Provide pressure drop indication across each fire compartment exhaust fan. The analog indication signal should be routed to a remote indicator in the instructor's station and then to the DTC. In addition, a pressure switch(es) should be provided which will sense the differential pressure across each fire compartment exhaust fan. The switch should have an adjustable setpoint that when reached will shut off the fan and send a binary signal to the DTC. The setpoint should be chosen to indicate impending fan surge or to ensure that the ductwork will not implode. If the airflow is restricted too much, the switch will stop the fan before equipment is damaged.

Table 1
Main Ventilation Air for Fireplace Compartment
of 21C12 and 21C12A Structures

PROPANE DEMAND L/s	VENTILATION AIR OUT AT 315 degrees C L/s
96	34 456

Notes: 1. Fan static pressure should be determined by comparing two modes of operations:

a. During burner operation: bring 15 degrees C air through the louvers and exhausting 315 degrees C air through the exhaust system.

b. Between firefighting scenarios (burners off): bring 15 degrees C air through the louvers and exhausting 15 degrees C air through the exhaust system.

2. The fan motor should be sized for bringing the lowest ambient air temperature expected through the louvers and exhausting it at the same temperature.

3.11.7 Control. Control of the ventilation should be performed as follows:

a) Before the start of training each day, the ventilation system should be energized with motorized dampers open and doors closed (in those structures with doors) to purge the structure of any unburned fuel which may have accumulated overnight. The purge should last at least 3 minutes.

b) When treatment equipment is required, a ventilation system control scheme should be provided to satisfy the device requirements discussed above, plus the treatment equipment in an economical manner.

c) Any motorized airflow adjustment device should be controllable by the device computer. The fans should run continuously or be off if not needed for extended periods of time. Floating point motors are for future sophistication.

d) To prevent back spin during startup of exhaust fans, provide the following:

(1) Individual controls for each fan and have it interfaced with the DTC.

(2) Each fan should have a two position back spin prevention motorized damper at the fan inlet. The damper should remain closed until the fan is started.

3.11.8 Preheat. In extreme climates where the annual heating degree days is greater than 2000, the ventilation air will require preheating. In trainers where the trainee walks into the path of the ventilation air, such as, bilge, berthing, or trash can fires, the air must be preheated. Where the trainee does not walk in the air path, as in the pit fire, the preheat temperature can be reduced for energy savings. The air passing through the burner rooms in extreme climates should be preheated. The preheating system should meet the following criteria:

a) Heating equipment should be sized to heat the design airflow from the low ambient design temperature to 10 degrees C. (This temperature was chosen because the heating

design temperature is at night and only occurs during a small percentage of the time. Such a system would provide 15.5 degrees C air 95 percent of the time.)

b) Design of the preheat system should not compromise the crawl space purge requirement. The preferred preheat system is to heat outside air and to distribute air over the louver, motorized damper, and backdraft damper combination in the crawl space. Air should be heated from outside ambient temperature to a temperature hot enough to allow a mixed air temperature of 10 degrees C. Mixed air is comprised of cold outside air from the louver combination units and hot air from the preheat system. The preheat system should be designed to heat the ventilation air by adequately mixing the air coming from louver combination units and the preheat system when the fire compartment exhaust fans are either exhausting 315.5 degrees C air (burners operating) or 10 degrees C air (burners off).

3.11.9 Other Rooms

3.11.9.1 Burner and Electrical Rooms. Some training structures have separate burner and electrical rooms. These rooms should be provided with filtered ventilation air which can be discharged directly to the outside, separate from the facility ventilation system. Fans in these rooms should run continuously while training is being conducted in that portion of the building. Control for this system should be by an HOA switch wired to the DTC. When there is no propane burner in the electrical room, the ventilation is for summer heat removal and should be controlled by a local wall switch in parallel with a thermostat. This ventilation does not apply to air conditioned electrical rooms associated with the instructor's station. Doors for electrical rooms should be 1200 mm wide.

3.11.9.2 Escape Trunks. Escape trunks should be provided with an exhaust fan located just below the roof hatch. This wall mounted fan should be wired to the DTC in the instructor's station so that anytime the escape trunk becomes too hot for training, the instructor can activate the fan. The exhaust fan for the escape trunk should be thermostatically controlled and should interface with the DTC.

3.11.10 Safety

3.11.10.1 Fuel Sensors. Ventilation should be designed to eliminate the possibility of any accumulation of unburnt fuel. Because fuel settles in low unflushed areas, careful crawl space and facility ventilation design can preclude this. To monitor this condition, the device includes fuel sensors located in the crawl space and in the electrical rooms which contain burners. These sensors sample their immediate location for fuel in excess of a percentage of the LEL. If an excess is registered, they shut down the control console in the instructor's station and sound an alarm. These sensor systems, installed by the device contractor and maintained by the using activity, should be located in strategic places.

Caution: Sensors and the ventilation system should be kept in good working order to prevent an incident.

3.11.10.2 24-Hour Propane Alarm. If the trainer is not in operation and 24-hour propane sensing is in effect, a means for remote alarm activation should be provided (by device computer) at the DTC. Any alarms or other indicators are the responsibility of the facility contractor. The DTC will be the interface where the facility contractor will receive the 24 Vdc continuous signal. A 24-hour propane alarm from the DTC should be provided at the 24-hour duty watch station. Refer also to par. 2.2.3.1.

3.11.10.3 Fan Interlock. Another level of safety should be provided to prevent the danger of accumulated unburned fuel in the trainers. Danger from accumulated unburned fuel in the trainer during the occupied period can be adequately eliminated by a system of ventilation fans, sensors, and interlocks. During unoccupied periods the risk is reduced by natural ventilation and proper operation of the purge fan. Proper operation during occupied periods requires flushing the crawl space prior to energizing crawl space electrical circuits. Crawl space electrical circuits therefore, should be interlocked with main exhaust fans. At least one fan should be operating during the maintenance period before training. Fans and dampers as interlocked in the sequence in par. 3.11.9.1 should be further interlocked to include a timer relay to energize electrical circuits after a 3-minute delay from the key operated

HOA switch. The timer relay will alleviate the human error of energizing the crawl space electrical circuit prematurely. Refer to Appendix A, Figure A-20.

3.11.10.4 Insulation or Shielding. Where exhaust ducts pass from one fire compartment into the occupied space of another, they should be shielded or insulated or otherwise outfitted to ensure that personnel cannot be burned. If insulation is used, its jacket should be able to withstand the heat and force of a hose jet.

3.12 21C12 and 21C12A Structures

3.12.1 General. The 21C12 and 21C12A structures will be used to provide hands-on practical firefighting, training for submarine personnel. The structure is designed to train a class of 25 students maximum. Refer to par. 3.1, subpars. f) through h) for class types.

3.12.2 Siting. On some projects, the 21C12 and 21C12A will be combined with the 21C6, submarine damage control trainer. Criteria for the 21C6 device is maintained by NAVAIRWARCEN Training Systems Division in Orlando, Florida. The 21C6 may only be physically attached to the 21C12 and 21C12A trainers at the bulk storage room. However, access to the bulk storage room via ramp and truck platform is required. Other exterior walls of the 21C12 and 21C12A should remain exposed to the outside.

3.12.3 Architectural. Floor plans for the 21C12 and 21C12A structures are provided in Appendix G.

3.12.3.1 Layout. The 21C12 and 21C12A structures should consist of one fireplace compartment containing three fireplaces. The compartment is accessed from staging areas on either side through a submarine watertight door. There are two submarine doors in the 21C12 and 21C12A structures. All three fireplaces should be able to run simultaneously.

Mechanical Equipment Room: A 232.25 sq. m (floor area) mechanical equipment room should be provided as a second floor above the bulk storage area.

3.12.3.2 Fireplace Compartment. The fireplace compartment should meet the following criteria:

a) Bulkhead should be located to maintain a clearance from the backwall of 228 mm plus or minus 12.7 mm. One wall should simulate a curved bulkhead. There should be two 3000 mm lengths of bulkhead, 3810 mm high with a curve radius of 4572 mm supported by ribs. Bulkheads should be spaced 4572 mm apart. Each bulkhead should have three support ribs spaced 900 mm apart. Ribs should be T-shaped, 254 mm high with a 203 mm top and constructed of 6.4 mm steel plate. Bulkheads and ribs should be made of steel in accordance with ASTM A36, Structural Steel. Wall ribs will be insulated by the device contractor to give a submarine-like appearance. The wall on the opposite side should be a vertical wall because it is hidden from the trainees by a 2150 mm, steel partition. This partition should contain two emergency air breathing (EAB) outlets located in 304 stainless steel housings which will shield the EAB outlets from the fires. EAB outlet housings are designated as "EO" in Appendix G. The emergency corridor is behind this partition. The corridor is not part of the training compartment and therefore does not have to retain a submarine-like appearance. Provide a 102 mm high steel kickplate around the edge of the training floor by mockups and fireplaces at the grating floor as shown in Appendix G, Figure G-1. The kickplate should minimize the trainee's feet from slipping into mockups and fireplaces. Broom finish concrete floors located in fireplace compartments. Provide two floor drains in the emergency corridor.

b) Short masonry walls opposite the partition should support the SHS1 hose station and EAB cabinets. The main walkway and emergency corridor floors should be concrete while the 1200 mm wide walkways leading to fireplaces should be steel plate. A grating equipment floor should be 310 mm below the training floor which should be continuous under the mockup. Mockups should be mounted on the grating equipment floor. Mockups should be located within 76 mm of steel walkway to preclude someone from getting their foot caught in the void. The device contractor should provide a personnel safety barrier between the mockups to prohibit a person from falling onto the grating equipment floor.

c) The facility contractor does not have to provide a temporary railing around the walkway since the grating equipment floor will be only 310 mm below. A chain railing should be provided by the facility contractor around the bilge fireplace.

3.12.3.3 Crawl Space. There should be a crawl space below the grating portion of the training compartment which maintains a 1372 mm clear space between the equipment floor and the floor of the crawl space. The concrete crawl space floor should be approximately 1550 mm below the equipment floor. The crawl space should extend below the fireplace compartment and part of both staging areas are as shown on Figure G-1 of Appendix G. Refer to floor plans in Appendix G for additional details.

3.12.3.4 Staging Areas. Staging areas should be at the training floor elevation and should be made of concrete. Each staging area should include 1 combined SHS1 and SHS3 hose station, 1 EAB cabinet, 2 oxygen breathing apparatus (OBA) canister racks, 10 OBA cabinets, 1 shower with hot and cold potable water, 1 water cooler, and doors leading to the outside and the bulk storage area. A portion of the staging area should be set aside for storage of many fire extinguishers required during training. Broom finish concrete floors in staging areas.

a) Hose drying in the 21C12 and 21C12A should be provided in the staging areas. Hose drying consists of naturally drying the hoses on the staging area floor between training classes.

b) Staging areas should be enclosed at the sites. No artificial smoke should be introduced into the staging area. Because of the fireplace compartment ventilation, its artificial smoke should never drift into the staging area.

3.12.3.5 Burner Room. Directly behind fireplaces should be a burner room. Across from each burner is the computer electrical cabinet which operates it. The bilge fire burner will be located in the crawl space.

3.12.3.6 Bulk Storage

a) Directly adjacent to staging areas should be a bulk storage area with the same floor elevation as staging area

floors. This storage space will take bulk deliveries of consumables, store them, and prepare them for use. Extinguishers should be passed between staging and bulk storage, refilled, and returned for use. There should be at least enough extinguisher bottles for three classes.

b) The bulk storage room should include an extinguisher fill station capable of replenishing CO_2, PKP, and AFFF extinguisher bottles. A truck platform should be provided for receiving bulk materials. The configuration should suit the type of packaging expected for the consumables for a given site. Refer to Section 4 for characteristics of CO_2, PKP, AFFF, and their systems.

3.12.3.7 AFFF Fill Station. The foam fill station for the 21C12 and 21C12A structures should consist of a mixing tank, measuring tank, pump, water supply, spill containment, and drain. Foam concentrate should be delivered in 200 L gal drums. A single .631 L/s low head pump should be piped to pump concentrate from the drum to the .631 L/s measuring tank and supply the extinguisher's fill hose. The concentrate should then flow to the mixing tank by gravity. Water should be supplied to the 1137 L mixing tank through an open sight funnel. The mixing tank should have a closed top with a hinged cover, liquid level sight glass, and drain located at the bottom of the tank. A restricted bypass should ensure that there is flow through the pump during extinguisher fill operations when the trigger fill nozzle is closed. Mixing of the solution should be done manually.

a) Hoses 15 mm in diameter should be provided for concentrate suction, solution discharge, and cold water washdown.

b) The fill station should be provided with 820 kPa shop air to supply the propellant charge for the extinguishers. This air should not be supplied from the EAB system compressor but from a separate 820 kPa shop air compressor. Each AFFF extinguisher takes 2 L of air at 689 kPa for a full charge. The compressed air supply for the AFFF extinguisher fill should be

sized for a minimum airflow of 2.36 L/s at 820 kPa. Piping, a means for filling the extinguishers, and a suitably sized air receiver should also be provided.

c) The entire foam fill station should be surrounded by a containment to collect spills. Ramps should be provided for access to the containment. Floor drains should be provided in the containment and in two sites in the bulk storage area where filled bottles will be stored. A room designated as an extinguisher washdown room should be located adjacent to the fill station. The AFFF fill station should be in accordance with Appendix G, Figure G-10.

d) EAB and AFFF fill compressors are sources of loud noise and vibration and should be located to minimize noise and vibration interference with training. Noise control for these compressors should be provided.

3.12.3.8 CO_2 Extinguisher Fill Station. A CO_2 extinguisher recharging station should be provided for the 21C12, 21C12A, 19F5, and 19F5A structures. The recharging system should consist of low-pressure refrigerated bulk storage tank and system with CO_2 at -17.8 degrees C and 2100 kPa, and a manual extinguisher fill pump. The system should be insulated and should have safety valves between isolation valves. Safety valves should vent outdoors. Ensure isolation valves are operable without interference with piping insulation. See Appendix I, Figures I-1 through I-7 for CO_2 details.

3.12.3.9 Repair Lockers. Repair lockers are not required for the 21C12.

3.12.3.10 Ceilings. The ceiling in the fireplace compartment should be 2438 mm above the training floor and constructed of grating hung from the roof. Access to the space above the ceiling should be provided. The roof should be a minimum of 3658 mm above the training floor.

3.12.3.11 Doors. Doors in the training structure should be 44.45 mm, hollow, metal doors unless indicated otherwise. Submarine doors between staging areas and the training compartment should visually simulate the watertight door on a

SSB(N) 616 Class Submarine. However, the door should retain only those functions which are necessary for firefighting training. The submarine door should be mounted in a steel frame bulkhead, located in the concrete wall of the fireplace compartment. Provide stainless steel grip rails with non-slip surface above the submarine doors, on both sides of the walls. Also provide support plates for smoke curtains at the submarine doors in the trainer compartment. The using command activity should provide smoke curtains. A support and door stop should be provided to secure the submarine door when in the open position. The submarine door should be as shown on BUSHIPS Dwg. 805-1400064. The submarine door should be specified as follows:

- Watertight quick-acting (WTQA)
- 316 stainless steel material
- 103.4 kPa test pressure
- Right-hand or left-hand operation
- 457 mm by 914 mm size
- Lever operation - six rotating dogs on frame

3.12.3.12 Fireplaces. The exact dimension of the burn areas are:

FIRE TYPE	DIMENSIONS
a) Bilge/ Oil Spray Combination Fireplace	3048 mm by 1219 mm 1548 mm by 610 mm
b) Hull Insulation Fireplace	4572 mm wide by height of bulkhead (mounted between bulkheads)
c) Electrical Panel Fireplace	305 mm by 1219 mm

The bilge fireplace should be in the equipment floor of the training compartment. The hull insulation fireplace, oil spray fireplace, and electrical fireplace should be openings in the burner room wall. The oil spray fireplace should penetrate the curved bulkhead or wall behind the bilge fireplace.

3.12.3.13 Instructor's Station. A space 6706 mm by 6096 mm should be provided as a combined instructor's station, electrical, and maintenance room. A raised computer floor should be provided throughout, with 310 mm clear space below the raised floor. Lightweight partitions will be added by the device contractor. These partitions will not support any device equipment without having additional bracing provided beneath the raised floor. There should be no windows in the instructor's station. The instructor's station should be heated and air conditioned.

3.12.3.14 Miscellaneous. Artificial smoke will be introduced in the training compartment only. There will be no artificial smoke in the staging areas or in the emergency corridor.

3.12.4 Mechanical

3.12.4.1 Use Rate. Utilities for the 21C12 and 21C12A structures (see Table 2) are designed to support ten 4-hour classes of 25 students each week (2 classes per day). A class will be divided equally into two groups. Each group will go to a staging area and remain there for the class duration. Fires should be fought by the teams separately and simultaneously. However, only one fire hose will be used at a time since a majority of submarine firefighting is done with portable extinguishers. Table 2 is based on training 250 students per week, 1000 students per month, and 11,000 trainees per year.

3.12.4.2 Firefighting Agents. The 21C12 and 21C12A training structures should contain four hose stations, two stations are the combined type and the other two stations are the individual type. Each of the two combined hose stations should consist of hose stations SHS1 and SHS2. The combined hose stations are located in the staging areas. The two individual hose stations are SHS1 and SHS2 and are located in the fire training compartment. The hose stations should be served by one 40 mm angle-globe valve. Provide a bronze end hose cap with the angle-globe valve for thread ends. The valve should have male hose threads at the cap connection. The angle-globe valve should be perpendicular to the wall and should be served by piping routed in or through the wall. Refer to Section 4 regarding details of hose stations.

Fifteen-lb CO_2, 8.2 kg PKP, and 9.46 L AFFF extinguishers should also be used. Since the use rate for extinguishers will be high, ready storage is located in the staging area. After beneficial occupancy, instructors should locate the extinguishers in the trainer compartment.

Table 2
21C12 and 21C12A Structures

CLASS NO.	NO. OF CLASSES PER YEAR	NO. OF PERSONNEL
A-495-2071	288	(25 PER CLASS)
-2072	24	(12 PER CLASS)
-2073	24	(14 PER CLASS)

PROPANE USAGE

BASIC COURSE A-495-2071

CLASS OF FIRE	NO. OF FIRES/ CLASS (25 STU)	FIREPLACE TYPE	PROPANE DEMAND L/S	PROPANE USE PER FIRE (L)	TOTAL PROPANE L/CLASS
A	13	Hull insulation	49.6	8915	115 889
B	13	Bilge/Oil Spray	42	7471	97 126
C	13	Electrical	4.7	368	4783
	39 Fires per class		203		217 796/ class;

803/class

Notes:
1. Propane demand is based on a gas pressure at the bilge and hull fires of 14 kPa.
2. The design propane demand for the building is 96 L/s.
3. It was assumed that although there are more fires in the 2071 course they do not burn as long; therefore, the total consumption 217 796 L/class, based on the 2071 course, is the design maximum.

Table 2 (Continued)
21C12 and 21C12A Structures

AGENT USAGE

WATER

NO. OF FIRES/ CLASS	NO. OF HOSES/ FIRE	WATER L/s	WATER TIME/ FIRE min	WATER/4 HOUR CLASS L
36	2	13	6	27 288

EXTINGUISHERS

NO. OF FIRES/ CLASS	PKP BOTTLES/ CLASS	PKP L/CLASS	AFFF BOTTLES/ CLASS	AFFF L/CLASS	CO_2 BOTTLES/ CLASS	CO_2 kg/ CLASS
25	12	98	25	98	25	170

Notes:
1. Water is used at the design rate during an 0010 course fire.
2. Extinguisher sizes are 8.2 kg, 9.5 L, 6.8 kg for PKP, AFFF, and CO_2 respectively.
3. AFFF indicated is based on 56.6 g of 40 percent concentrate in 9.5 L of water.
4. Extinguishers are used at the design rate during an 0011 course fire.
5. PKP extinguishers will use 40 CO_2 charges per class.
6. Though water is used for firefighting, extinguishers are the primary method for fighting fires on submarines.

Table 2 (Continued)
21C12 and 21C12A Structures

TOTAL UTILITIES

	DAILY	WEEKLY	MONTHLY
Propane	305 cu. m	1525 cu. m	6098 cu. m
Water	81 864 L	272 880 L	682 200 L
AFFF Concentrate (100%)	14 L	68 L	212 L
PKP	98 kg	588 kg	2354 kg
CO_2	511 kg	2384 kg	7661 kg

Notes: 1. Daily rates assume three 4-hour classes in the trainer a day.
2. Weekly rates for water assume (10)-0010 and five -0011 classes a week; for extinguishers, assume five -0010 and (10)-0011 classes a week.
3. Monthly rates assume (25) 0010 and (25) 0011 classes.
4. AFFF Concentrate (100 percent) is 20 percent AFFF, 80 percent water.

Caution: Any extinguisher located inside the training compartment must be shielded from fires. If it were exposed to the radiant heat, pressure inside the extinguisher could build to unsafe levels.

3.12.4.3 Ventilation for 21C12 and 21C12A Structures. Ventilation for the 21C12 and 21C12A structures should conform to the following criteria:

a) The design ventilation for the 21C12 and 21C12A should be based on the simultaneous operation of all three fireplaces or 34 456 L/s "air out."

b) The training compartment should have a 330.2 mm diameter ventilation duct which should be used for training purposes. This duct should run above the main walkway and terminate with a cap above the ceiling in staging area 1. The other end should lead to the fan room above staging area 2. There should be a bulkhead flapper at both staging area wall penetrations. A 200 mm branch leading to the fire area should be fitted with a 200 mm female blower adapter to allow the trainees to connect a Red Devil blower. The blower should be used to aid in evacuating smoke from the space during the training exercise. Bulkhead flappers and blower adapter should be provided by the device contractor. The horizontal run and the elbow in staging area 2 should have access panels for cleanout. Device contractor should provide the Red Devil blower and adapter.

c) In the fan room, the trainee vent duct should connect to the main compartment exhaust system through a motorized damper and a manual damper. During a training scenario when the trainee secures the mockup compartment ventilation, the motor damper should close automatically, stopping the flow of smoke into the branch duct. Note the actual compartment ventilation should be unaffected. The fan should run continuously. When the trainee attaches the Red Devil blower to the branch duct and reactivates the trainer ventilation, the motor damper should reopen, discharging into the main exhaust duct.

d) The main ventilation system for the fireplace compartment should have intakes above the ceiling level at the bilge and hull fireplaces, above the entrance to the emergency corridor at the ceiling level at the bilge and hull fireplaces, above the entrance to the emergency corridor at the ceiling level, and at the roof level above the emergency corridor door leading to staging area 2. Each of the intake ducts should have manual dampers for volume control. The main ventilation system should be provided with a floating point damper in the main exhaust duct run serving the fireplace compartment.

e) The main ventilation system duct work should be oversized as follows:

(1) The main duct run should be sized for 100 percent of the fireplace compartment ventilation.

(2) The intake and ductwork for each of the two fireplaces, bilge and hull, should be sized for 100 percent of the fireplace compartment ventilation. The manual damper for each of the two intakes should be set to exhaust 826 m^3/min) at 316 degrees C of exhaust gases.

(3) The intakes and ductwork for the roof level and emergency corridor exhaust point should each be sized for 25 percent of the fireplace compartments ventilation. The manual damper for each of the two intakes should be set to exhaust 207 m^3/min) at 316 degrees C of exhaust gases.

(4) Ventilation exhaust equipment and systems should be designed and selected for continuous operation at 399 degrees C.

3.12.4.4 Air Conditioning and Heating. The electronic equipment in the instructor's station is expected to add 11 237 W to the air conditioning load. This can be broken down into 6629 W in the operator station and 4608 W in the electrical room. Design for five people in the instructor's station rooms. One staging area should be heated during the unoccupied times. The staging area should be designated as a hose drying area where wet hoses can be stored until the next training session.

3.12.4.5 Cooling Spray. Cooling spray nozzles should be located above the grating ceiling aimed to direct water on the mockups. The single water supply pipe leading to the nozzles should have a motorized valve with a manual bypass controlled from the DTC. The cooling will be activated between exercises whenever the training compartment becomes too hot. The cooling system should not be part of the training scenario. Each cooling spray nozzle should have a constant dripping of water to cool compartment walls. Refer to par. 3.8.3.

3.12.4.6 Breathing Air. Two types of breathing apparatus are used in the 21C12 and 21C12A structures, the OBA and EAB devices. The OBA canisters for this structure should be racked in accordance with Appendix G, Figure G-5. There should be two such racks in each staging area for a ready storage of 44 OBA canisters per team. The OBA headpiece should be stored in lockers constructed in accordance with Appendix G, Figure G-7. There should be 10 OBA lockers in each staging area. The EAB outlet housings should be constructed in accordance with Mare Island Dwgs. 612-1889964A1 and 612-1889964A2, see Appendix G, Figure G-11. Housings should have doors. There should be eight EAB outlet housings, four in the fireplace compartment, two in the emergency corridor, and one in each of two staging areas.

Caution: Care must be taken during design and construction of the breathing air system to eliminate any possibility of the air in the EAB system rising in temperature such that it would be hazardous to health. The EAB system piping should not be routed in the fireplace compartment.

a) Store EAB head gear in a cabinet in accordance with Appendix G, Figure G-6. Two cabinets must be located in each staging area and two cabinets must be located in the fireplace compartment.

b) The EAB system must be in accordance with the schematic shown on LANTDIV Sketch No. SK-M-43-86. The EAB system must be a 689 kPa system. Naval Facilities Guide Specification (NFGS) 15484, Medical Gas and Vacuum Systems, on nonflammable medical gas systems can be used; however, modify the guide specification to suit requirements of this 21C12 and 21C12A criteria.

c) The EAB system should meet: (1) Fed. Spec. BB-A-1034, Source II and (2) 29 CFR 1910, OSHA Safety and Health Standards for General Industry Grade D breathing air requirements. Delete reference to Table II. The EAB compressor should be an oil-free, breathing air compressor: single-stage, positive displacement, non-pulsating, and liquid ring type, Nash Engineering Company, Model OC-5C or equal. To meet breathing requirements, the EAB system may require use of a refrigerated

air dryer and a high purity air filter/cleaner. Fresh air intake to the EAB compressor should be located away from any potential air contamination sources.

d) Air samples taken from the completed system should be tested and approved in accordance with: (1) Fed. Spec. BB-A-1034, Source II and (2) 29 CFR 1910 Grade D breathing air requirements prior to system acceptance and twice per year. The EAB system is not required to be certified per Naval Material Command (NAVMAT) P-9290, System Certification Procedures and Criteria Manual for Deep Submergency System.

3.12.5 Electrical

3.12.5.1 Power. The power requirement for the device should be 35.5 kVA. It should be 120/208 Vac, three-phase, 60 cycle and include 21.4 kVA in the burner room and 14.1 kVA in the instructor's station.

There should be two heavy duty type electrical outlets in the training compartment located on the edge of the main walkway. One outlet should be 480-Vac, three-phase, 60 cycle and the other should be 120-Vac, single-phase service.

3.12.5.2 Lighting. The 21C12 and 21C12A structures parking lot and grounds should be lighted for nighttime operation. The training compartment should be lighted for maintenance from underneath the grating.

Emergency egress corridors should be lighted with low wall fixtures located to be shielded from the fires. Locate switches on both sides of emergency exit doors. These lights should only be used for maintenance purposes so that the lights should not interfere with training.

The device contractor should provide training compartment lighting which is remotely controlled from the instructor's station.

3.12.6 Propane Alarm System. The firefighting training facility should have a 24-hour propane detection system in the trainers. The detection system should be provided by the device contractor and monitored by device computers.

The facility contractor is required to interface with the detection system via a DTC and an alarm system. The facility contractor should provide the following:

a) A DTC for the trainer, refer to par. 2.5.3.2.

b) An alarm system with audible alarms, warning lights (backlighted signs), and manual pull stations.

The alarm system should be wired to the DTC and should consist of the following: (See Appendix G, Figure G-17 for the alarm system schematic.)

3.12.6.1 Central Control Panel. Provide a central control panel at the quarterdeck or 24-hour duty station. The panel should be wired to the DTC, should be UL listed, and should have indicating lights indicating the source of alarm from the DTC, auxiliary control stations, and manual pull stations.

a) Provide manual control on the central control panel for actuating and deenergizing the audible alarms and warning signs.

b) The DTC should be capable of energizing and deenergizing the alarm system.

c) The central control panel with the appropriate label should contain connections for future propane to the fire department.

d) A propane alarm condition can be actuated by the DTC, manual pull stations, central control panel, or auxiliary control stations. The alarm condition can be deenergized only by the DTC, central control panel, or auxiliary control stations. Audible alarms can be deenergized only by auxiliary control stations.

e) In the event of an alarm condition, appropriate warning signs, audible alarms, and the DTC should be alarmed by the central control panel.

3.12.6.2 Audible Alarms. Provide audible alarms at the following locations:

a) Classrooms and offices

b) Locker rooms and restrooms

c) Storage rooms

d) Staging and training areas

e) Quarterdeck or 24-hour duty station

f) Main corridors and vestibules

g) Mechanical and fan rooms

h) Propane storage areas

3.12.6.3 Propane Warning Signs. Provide separate propane warning signs at the following locations:

a) Front entrance

b) Loading dock

c) Quarterdeck or 24-hour duty station

d) Instructor and operator station

e) Propane storage area

Warning signs should be the backlighted type and should flash when there is an alarm condition. Propane warning signs should state "DANGER - PROPANE ALERT."

3.12.7 Manual Pull Stations. Provide separate manual pull stations which actuate an alarm condition at the following locations:

a) Outside propane tank storage area

b) Mechanical rooms

3.12.8 Auxiliary Control Stations. Provide auxiliary control stations which consist of manual pull stations. Auxiliary

control stations should be capable of deenergizing the audible alarms. Provide auxiliary control stations at the following locations:

a) Instructor and operator station

b) Quarterdeck or 24-hour duty station

3.12.9 Intercom System. Provide an intercom system to include the following:

a) Audible alarms should override the intercom system until the alarms have been secured. When audible alarms have been secured, the intercom system should be operable. Intercoms should not be provided in fireplace compartments, crawl space, and burner rooms.

b) The intercom system should have public announcement capability with speakers located in all rooms of the facility, except as noted above.

3.13 19F1A and 19F1B Structures

3.13.1 General. The 19F1A and 19F1B structures should be used to train in the Advanced Shipboard Firefighting Team Evaluation Course, J-425-0424. The structure is designed to train an 0424 class of 30 students and can train two classes or 60 students each week operating a single shift.

3.13.2 Architectural. Floor plans for the 19F1A and 19F1B structures are in Appendix B.

3.13.2.1 Layout. The 19F1A and 19F1B structures contain eight training quadrants on two floors accessible by a centrally located corridor. Staging should be done on the upper level. The structure, including the corridor, should be divided in half by a smoke tight wall allowing for separate and independent training to proceed simultaneously. To better control the products of combustion, the second floor crawl space floor should also be smoke tight. Corridor walls and the escape trunk enclosure should be continuous from the crawl space floor to the concrete ceiling over the training compartment. Provide

ventilation openings at the base of these corridor enclosures on three walls. Personnel access to the space below the corridor floor should be by removing a grating section.

Except for the aforementioned walls, the crawl spaces should remain open and clear. Partition walls should stop at the training floor. Grating should be used exclusively for the training floors in the 19F1A structure.

3.13.2.2 Ceilings. A steel barrier or false ceiling should be provided in Compartments 1 and 2 below the second floor crawl space to facilitate buildup of residual heat so the room stays hot during the whole exercise. The ceiling shields the crawl space floor above from direct radiant heat, keeping it cooler. A clearance of approximately 310 mm should be maintained between the barrier and the walls.

3.13.2.3 Doors and Hatches. The door type should be as shown on the floor plan. Exterior doors on the first and second training levels are for emergency use only. Their location may be shifted to accommodate structural requirements. Hollow metal doors should be used for non-training doors for identification purposes. During search and identification classes, the trainee should be instructed to use only watertight doors.

a) Access to the first floor from the second floor should be through a horizontal large hatch. These hatches are to be located between floors instead of on the roof because the roof location would require the roof to be 2438 mm wider. Also the hatch will get hotter located between floors which is a plus for training.

b) The heat shield for the Ellison door is a definite requirement, however, the shield restricts access to Compartment 1 from the escape trunk. For trainee safety, the bilge fire will be programmed to be off, or in the low fire position, in that corner during escape trunk training so the trainees can walk in that area of the fireplace.

3.13.2.4 Fireplaces. Exact dimensions of burn areas are given in Table 3 incrementally by compartment.

Table 3
Dimensions of Burn Areas for 19F1A and 19F1B Structures Figures

COMPARTMENT	TYPE	SIZE
Compartment 1 5791 by 5791 mm	Bilge Fire	2 rectangular areas 1524 by 3658 mm, 610 by 1524 mm
	Oil Spray	610 by 1524 mm above bilge
Compartment 2 5791 by 5791 mm	Bilge Fire	2 rectangular areas 1524 by 3048 mm, 1524 by 3048 mm
	Obstruction	914 by 1829 mm (914 mm H)
Compartment 3 4572 by 5486 mm	Clothes Dryer	1981 mm H by 1372 mm W by 1016 mm D
	Electrical Panel	305 by 1219 mm (Note 1)
	Obstruction - Laundry Table	762 mm by 1524 mm (762 mm H)
Compartment 4 4572 by 5486 mm	Deep Fat/Stack	610 by 1524 mm (Note 1)
	Wire Bundle (Cable Raceway)	3048 by 457 mm (Note 1)
Compartment 5 4572 by 5791 mm	Radar Display Console	610 by 914 mm
Trash Can		1829 by 1829 mm
	Escape Trunk (No exit)	1524 by 1524 mm
Compartment 6 4572 by 5791 mm	Weapons Fire Enclosure	2134 mm by 2134 mm by 2438 mm H
	Storage Room	2134 mm by 2134 mm by 2438 mm H

Table 3 (Continued)
Dimensions of Burn Areas for 19F1A and 19F1B Structures Figures

COMPARTMENT	TYPE	SIZE
Compartment 7 4572 by 5486 mm	Mattress Fire	2134 by 1067 mm
	Locker Fire	914 by 1067 mm
	"Dummy" Mattress Mockup	2134 by 1067 mm
Compartment 8 4572 by 5486 mm	Motor Generator	914 mm off each wall 914 by 1219 mm
	Vent Duct	3658 by 610 mm (Note 1)

Notes:
1. No hole in floor is required for these fireplaces.
2. Dimensions for fireplace compartment sizes should be clear dimensions. When compartments have refractory coatings and steel plate liners on walls, the inside clear dimension should be from liner to liner.
3. Facility to provide fireplace steel gratings. NAWCTSD will supply drawings and cost estimate to the facility architect during design phase.

3.13.2.5 Enclosures

a) The enclosure in Compartment 4 is designed to complicate the training associated with the cable raceway fire. The enclosure should be 2134 mm by 2134 mm and should have 2600 mm high steel walls, a grating floor, a wire mesh door, and no ceiling. The raceway fireplace should be located 2150 mm above the floor and should be installed by the device contractor who should cut the necessary holes in the steel walls.

b) There are two enclosures in Compartment 6. One encloses the storage room fireplace and the other is the weapons enclosure. The storage room should be 2150 mm by 2150 mm. Walls and the door should be steel frame with heavy chain link fence fabric sides. Walls should be 2438 mm high. No ceiling should be provided. The floor should be a standard fireplace floor which means it should be open until the device is installed. Provide a chain inside the door to prevent entry until the floor is installed. The 2134 mm by 2134 mm weapons enclosure should be 2438 mm high steel in front and adjacent to the storage room. No ceiling. Provide a watertight door. The floor should have a fireplace floor perimeter, however, a temporary grating floor with associated temporary supporting structure should be provided. The weapons fireplace or fire enclosure should be installed sometime in the future, therefore, a temporary floor is more appropriate than a drained entry.

3.13.2.6 Instructor's Station. The instructor's station should conform to the following criteria:

a) The instructor's station should have two personnel doors and two windows with dimensions of 2438 mm by 762 mm.

b) The instructor's station and electrical room below it should be 3048 mm wide and air conditioned. Contractors should be cautioned to seal wall penetrations airtight. Note that other maintenance areas should be ventilated only.

c) Provide a 1550 mm diameter circular stairway between the two floors. The stairway provides secondary access, is circular to save space, and is too narrow for equipment passage. The transferring of equipment can be accomplished by exterior doors and stairs.

3.13.2.7 Miscellaneous. The following are additional architectural criteria pertaining to 19F1A structures:

a) Local OBA cabinets should not be used in the 19F1A structure. The OBA's should be stored in the repair lockers.

b) An escape trunk should be provided in Compartment 1.

c) The inclined ladder leading to Compartments 1 and 2, and 3 and 4 descends greater than 4300 mm, however, no intermediate landing is required. The inclined ladder should be slip resistant.

d) The Foam Reel Station (FR) and Halon systems between Compartments 1 and 2 should be protected from the fire by 1200 mm high heat shields. Heat shields should be constructed of pipe and sheet metal and be sized so radiant heat from the fire cannot reach the firefighting equipment.

3.13.3 Mechanical

3.13.3.1 Use Rate. The 19F1A and 19F1B structures are designed to house 13 distinct fireplaces to instruct a one-day course for two ship's teams of up to 24 members per team. The ship's teams are organized inport duty section fire parties, repair parties, rescue and assistance details and at-sea fire parties (average team size is 18). Each team should be assigned a building half for training. Each side of the building should have three training exercises per hour. Each team should fight a minimum of five fires with a sixth fire as the graded exercise for the course. The graded exercise for the team should be on the opposite building half from which the team trained. A typical schedule should consist of three classes (A, B, C) per week, 108 trainees per week or 5,400 trainees per year.

3.13.3.2 Firefighting Agents. The first and second training floors should have HS1 type hose stations while HS2 hose stations should be installed on the roof staging area. In addition, one foam hose station (FS) and one FR type hose station for foam, should be installed on the roof staging area. The FS by the escape trunk should supply foam to the FR in Compartment 2 and to the FR on the roof. Provide six 6.81 kg CO_2 cylinders, four 13.6 kg PKP cylinders and one 9.08 kg PKP cylinder. These cylinders should be provided by the facility contractor and located and installed by station personnel. Halon 1301 (device contractor installed) should be simulated in Compartment 1 and a foam reel FR, should be provided in Compartment 2. Foam should be used throughout the structure from hose reels and 18.95 L cans.

Provide a 40 mm fire water line to the deep fat fryer fireplace and terminate it with a globe valve below floor grating. The water should be used for APC extinguishing agent simulation.

For propane usage, agent usage, and total utilities, see Table 4.

Table 4
19F1A and 19F1B Structures

FIRE CLASS		TIME	NO. OF FIRES
A	Wednesday	AM	12 fires
		PM	12 fires
B	Thursday	AM	12 fires
		PM	12 fires
C	Friday	AM	12 fires
		PM	12 fires

PROPANE USAGE

CLASS OF FIRES	NO. OF FIRES/ GROUP (15 MEN) 2 DAYS	FIRE TYPE	PROPANE DEMAND L/s	PROPANE USE PER FIRE L	PROPANE/ GROUP FOR 2 DAYS
A	3	Trash Can	4.75	425	1274
	3	Mattress/Locker	19.5	849	2547
	3	Steam Clothes Dryer	4.75	425	1275
	3	Storage Compartment	19.5	849	2547
	3	Vent Duct	4.75	425	1274
B	4	Bilge/Oil Spray (Note 1)	66	9905	39 620
	4	Bilge (Note 2)	83	12 395	49 582
	3	Deep Fat Fryer/ Fryer Hood	19.5	849	2547

Table 4 (Continued)
19F1A and 19F1B Structures

PROPANE USAGE (Continued)

CLASS OF FIRES	NO. OF FIRES/ GROUP (15 MEN) 2 DAYS	TOTAL FIRE TYPE	PROPANE DEMAND L/s	PROPANE USE PER FIRE L	PROPANE/ GROUP FOR 2 DAYS
C	1	Electrical Panel	2.4	212	212
	1	Motor Generator	4.75	425	425
	1	Radar Display	4.75	425	425
	1	Cable Raceway	4.75	425	425
Alternate	6	A, B, or C		849-12 395	56 600
	36 fires/group				158 763 L/ group 580 L/ group

Notes:
1. Compartment 1.
2. Compartment 2.
3. There should be 12 fires per group, 24 fires per class, 72 fires per week.
4. Propane demand is based on a gas pressure at the burner of 7 kPa except for bilge fires which are based on 14 kPa.
5. The design propane demand for the structure is 66 + 83 + 9 = 158 L/s.

AGENT USAGE

CLASS OF FIRE	NO. OF FIRES/ GROUP	NO. OF HOSES 40 mm	WATER L/s	AFFF 6% L/s	PKP FIRE kg	CO2 FIRE	TIME min
A	15	2	4.4				3-5
B	8	1		95	5-9		8-10
C	4					(2)7 kg Bottles	

Table 4 (Continued)
19F1A and 19F1B Structures

AGENT USAGE (Continued)

CLASS OF FIRE	NO. OF FIRES/ GROUP	NO. OF HOSES 40 mm	WATER L/s	AFFF 6% L/s	PKP FIRE kg	CO2 FIRE	TIME min
Deep Fat	3	1	4.4		9		3-5
Alternate	6	1		95	9		

Notes: 1. Bilge fires should be fought sometimes using AFFF and portable PKP bottles.
2. The design water demand for the structure is 4.4 + 4.4 + 6, or 15 L/s.

TOTAL UTILITIES

	DAY 3/	WEEKLY	MONTHLY
Propane	311 300 L	622 600 L	9096 L
Water	166 760 L	333 520 L	1 334 080 L
AFFF Concentrate (100%)	3032 L	6064 L	24 256 L
PKP	227 kg	454 kg	1816 kg
CO_2	114 kg	227 kg	908 kg

Notes: 1. The water category includes the water portion of AFFF (94 percent water, 6 percent AFFF for design).
2. 67 percent of water usage occurs on Tuesday and Thursday.
3. Values listed equal two times the group rates for "19F1A Propane Usage" and "19F1A Agent Usage."
4. The monthly consumption equals four times the weekly values.

3.13.3.3 Ventilation

a) There should be an exhaust duct leading from each compartment with a separately operated motorized floating point damper. These ducts should terminate at the concrete ceiling and not penetrate the ceiling liner. These ducts should come

together above the roof staging area and lead to the exhaust fan system. The collection duct can be as much as 2438 mm wide and the bottom should be no closer than 2134 mm to the staging floor.

b) The design capacity of exhaust fans should be based on the simultaneous operation of compartments or 46 256 L/s "air out." For ventilation air per compartment, see Table 5.

c) The anticipated control is by device computer and is as follows: When a fire is initiated, the building exhaust system should control from flushing to full design ventilation. The damper for the functioning compartment should open to a full design ventilation position. Dampers in nonfunctioning compartments should remain in their minimum flushing position.

d) Although smoke should not be admitted directly into corridors, roof entryways should have an exhaust duct to capture any stray smoke. The duct should discharge into the main exhaust duct through a manual damper.

3.13.3.4 Air Conditioning. Electronic equipment in the instructor's station is expected to add 5274 W to the air conditioning load. Normal occupancy should be eight people. The electronic room below the instructor's station has an air conditioning load of 9816 W due to equipment. Individual thermostatic control of each area is required.

3.13.4 Electrical. The power for the device should be 75 kVA. Provide 120/208-Vac, three-phase service. Provide four lights for each training compartment switched by compartment. Locate a switch for each compartment by the closest crawl space door and another outside by the emergency door. These light fixtures should be provided to light the training compartment by shining up. There should be six lighting circuits per crawl space.

Table 5
19F1A and 19F1B Ventilation Air

COMPARTMENT	PROPANE DEMAND L/s	VENTILATION AIR OUT AT 316 degrees C L/s
1	66	11 942
2	83	14 774
3	5	2171
4	9	4342
5	5	2171
6	9	4342
7	9	4342
8	5	2171

Notes: 1. The design ventilation is the sum of compartments or 46 256 L/s "air out." The minimum flushing ventilation should be as low as the fans can turn down but never lower than 3776 L/s "air in."
2. Fan static pressure should be determined by bringing 10 degrees C air through the louvers and exhausting 315.5 degrees C through the exhaust system.

3.14 19F3 and 19F3B Structures

3.14.1 General. The 19F3 and 19F3B structures should be used to train the General Shipboard Firefighting Training Course, J-495-0412. The structure is designed to train an 0412 class of 108 students and can train three classes or 324 students each week operating a single shift. Approximately 15,500 students can be trained in a year.

a) The location of the four buildings of the 19F3 and 19F3B trainers are flexible; however, consideration should be

given to clustering them around the instructor's station located in the bilge fire building, to minimize control wiring lengths. No building should be further than 18 m horizontally from the instructor's station.

b) Line of sight is not a requirement between the instructor's station and pit fire buildings.

3.14.2 Architectural. Floor plans for the 19F3 and 19F3B structures are in Appendix C. The 19F3 and 19F3B devices are housed in four structures: the bilge fire building, galley/berthing building, and two pit fire buildings.

3.14.2.1 Bilge Fire Building (19F3 and 19F3B). The bilge fire building should have interior dimensions of 9144 mm by 9144 mm with a ceiling height of 4600 mm. This area should house a generalized mockup of a shipboard engineering space to provide realism while exposing students to a major Class "B" bilge fire. Staging should be on the roof and at one ground level entrance. One topside entrance should include a dogged watertight door built into a vestibule, leading to an inclined ladder. Provide reinforcing of the landing to prevent swaying when six students with fire hoses are descending. The ladder should have a 1550 mm long landing midway down its length. At bilge area 1, the dimension from the corner to the shield should be 3124 mm clear. At bilge area 2, the dimension from the corner to the escape truck liner should be 7163 mm clear.

a) The bilge fire building should have a second topside entrance by way of a watertight hatch and emergency escape trunk.

b) A ground level entry with staging area should be located under the vertical ladder in the bilge fire building. The staging area should include a 4572 mm by 4572 mm OBA locker with a ground level entry. The design of the OBA locker should be similar to a repair locker.

c) A 1219 mm wide walkway should be provided around the exterior of the building to allow for emergency egress and to allow exterior viewing of the training scenario. Two sets of stairs should provide access to the roof.

d) A metal false ceiling should be provided in the B1 building to facilitate the buildup of residual heat so the room stays hot during the whole exercise.

e) The perimeter dampers on the B1 building should be 609.6 mm high.

3.14.2.2 Galley/Berthing Fire Building. The galley berthing building should have interior dimensions of 9144 mm by 9144 mm and a ceiling height of 3048 mm. It should be divided in half with one half having mockups to represent a berthing space and having a weapons fire enclosure. The other half should contain a deep fat fryer fire, a cable raceway fire, and an electrical panel fire. Staging and access to the structure should be from staging area at same level as training floor through watertight doors.

a) Provide a 40 mm process water line to the deep fat fryer fireplace and terminate it in a globe valve under trainer floor. This water line should be used for APC extinguishing agent simulation.

b) A 1219 mm wide walkway should be provided around the exterior of the structure for emergency egress and viewing.

3.14.2.3 Pit Fire Building. The pit fire building should be 9449 mm by 7620 mm and contain a 4572 mm by 4572 mm fireplace to teach basic firefighting techniques. The ceiling should be 9144 mm above the training floor. A staging area should be provided so the students enter the structure through a 6096 mm wide by 3658 mm high opening in the wall. No door is required.

a) The floor around the fireplace should be steel plate with a non-slip surface. The floor should slope to the fireplace so agents are channeled to the crawl space. The rear perimeter plate should be 610 mm wide. There is no training requirement for the decking on either side or to the rear of the B3 or B4 building.

b) Columns used to support the fireplace perimeter should be located at each corner, one on each side in the center

and two in the front and back on 1524 mm centers. A vertical barrier should be provided around the perimeter of the fireplace to prevent water from getting beyond the perimeter.

c) Students will walk on the fireplace grating but this grating must be provided by the device contractor along with the weapon mockup ramp. When a device contractor supplied weapon mockup is indicated it must be stored inside the building.

3.14.2.4 Doors. Doors leading to the fire areas of the 19F3 and 19F3B structures must be quick-acting watertight doors. Doors leading to non-fire areas must be hollow metal doors. In the galley/berthing building, the door between Compartments 1 and 2 must be watertight.

3.14.2.5 Fireplaces. Dimensions of specific fireplace locations are listed in Table 6.

3.14.2.6 Instructor's Station. An instructor's station should be located on the roof of the bilge fire building and should control the 19F3 buildings. The instructor's station should be 3658 mm by 7315 mm. Directly below the instructor's station should be an air conditioned electrical space. Window dimensions should be 2591 mm with the bottom 1219 mm above the floor.

3.14.3 Mechanical

3.14.3.1 Use Rates

a) The 19F3 and 19F3B structures are designed to house eight distinct fireplaces to instruct a 2-day course for a class of 108 trainees. The afternoon of the first day, the class is split into two groups of 54 students each. Each group goes to a deck fire building, B3 or B4, where group is further divided into two groups of 27. First group is divided into four hose teams. All four hose teams fight the fire at one time. The second group of 27 is given lectures. Each group will receive a "dropped weapon" fire demonstration at the end of their deck fires. Once fires and demonstrations are completed for each group, the two groups on each building should rotate and repeat lectures and fires.

Table 6
Dimensions for 19F3 and 19F3B Structures Fireplace Locations

Bilge fire building B1	
2 rectangular areas:	2134 x 2438 mm; 1219 x 5182 mm
3 rectangular areas:	1524 x 2438 mm; 1524 x 2438 mm; 2743 x 1524 mm
Obstructions:	610 x 3048 mm x 2438 mm H 3048 x 2743 mm x 1829 mm H
Pit fire building, B3:	4572 x 4572 mm
Pit fire building weapon, B4:	4572 x 4572 mm
Galley/berthing building, B2	2134 x 2134 mm x 2438 mm H
Mattress/locker fire	3048 x 1067 mm
Dummy mattress mockup	2134 x 1067 mm
Mattress/locker mockup	4572 x 1067 mm
Deep fat/stack hood	610 x 1524 mm (Note 1)
Electrical panel	3048 x 1219 mm (Note 1)
Cableway	3048 x 914 x 2438 mm AFF (Note 1)

Notes:
1. No hole in floor is required for this fireplace.
2. Dimensions for fireplace compartment sizes must be clear dimensions. When compartments have refractory coatings and steel plate liners on walls, the inside clear dimension must be from liner to liner.
3. Facility to provide fireplace steel gratings. NAWCTSD will supply drawings and cost estimate to the facility architect during design phase. For Buildings B-3 and B-4, facility to provide fireplace steel grating supports. NAWCTSD will supply drawings and cost estimate to the facility architect during design phase.

b) The second day the class is divided into two groups of 54 students each. Each group then goes to either the B1 or B2 structure. In the B1 building, the group is divided into two groups of 27 students. One group goes to the top level of B1 and one group goes to the bottom level of B1. The top group performs a vertical entry into the space and attacks the oil spray-bilge fire. The lower group should attack the prop shaft bilge fire alternately with the top level group. When both levels have completed fires, groups alternate from the top to the bottom and bottom to the top and repeat. In the B2 building, the group of 54 is also split into two groups of 27 each. The first group of 27 is then split into two groups and each attacks the mattress and metal storage locker fires together from two separate entrances until each member has fought a Class "Alpha" fire as a nozzleman. The second group of 27 fights the electrical panel and the wire bundle fires until each member has extinguished a Class "Charlie" fire. The second group should also watch a demonstration on the deep fat fryer and stack hood fire. Once both groups are finished with their first part of B2, they should alternate with the other group until students have completed B2.

Until completion of each building, the group from B1 should go to B2 and the B2 group should go to B1 until students have completed both buildings.

For propane usage, agent usage and total utilities, see Table 7.

3.14.3.2 Ventilation. (See Table 8). Provide an exhaust outlet above each bilge area and in each compartment. Ducts from one fireplace should not run horizontally through the compartment of another fireplace. The design capacity of exhaust fans for the B1, B2, B3, and B4 buildings should be equal to the maximum building ventilation L/s "air out."

3.14.3.3 Air Conditioning. Electronic equipment in the instructor's station is expected to add 7800 W to the air conditioning load. Normal occupancy should be six people. The electrical room below the instructor's station has an air conditioning load of 7102 W due to equipment. Individual thermostatic control is required for each area.

Table 7
19F3 and 19F3B Structures

CLASS SCHEDULE

BUILDING	MON AM	MON PM	TUE AM	TUE PM	WED AM	WED PM	THU AM	THU PM	FRI AM	FRI PM
B1			X		Y		Z			
B2			X		Y		Z		MAINTENANCE	
B3		X		Y		Z				
			2/	2/		2/				
B4		X	X	Y	Y	Z	Z			

Notes: 1. Day 1 AM, Classroom lecture
2. Day 2 PM, Demonstrations
3. Three classes: X, Y, Z

PROPANE USAGE

BLDG	CLASS OF FIRES	NO. OF FIRES/ CLASS	FIRE TYPE	PROPANE DEMAND L/s/min	PROPANE USE PER FIRE/L	TOTAL PROPANE/ CLASS L
First Day PM						
B3	B	30	Pit	186	16 725	501 759
B4	B	30	Pit	186	16 725	501 759
Second Day						
B1	B	13	Bilge Area 1	79	9509	123 614
	B	14	Bilge Area 2	187	10 584	148 207
B2	A	9	Mattress/ Locker	9	849	7641
	B	9	Deep Fat Fryer/ Fryer Hood	9	849	7641
	C	9	Elect. Panel	2	212	1924
	C	9	Cable Raceway	5	425	3821

Table 7 (Continued)
19F3 and 19F3B Structures

PROPANE USAGE (Continued)

BLDG	CLASS OF FIRES	NO. OF FIRES/ CLASS	FIRE TYPE	PROPANE DEMAND L/s/min	PROPANE USE PER FIRE/L^3	TOTAL PROPANE/ CLASS L^3
Second Day (Continued)						
B3 or B4	D	12	Pit/Weapon	186	16 725	200 704
Alternate		9	A, B, or C	89	10 584	95 258
		144 fires/class				715 000 Class for 2 Days
						43 639 Class for 2 Days

Notes:
1. Propane demand is based on a gas pressure at the burner of 6.89 kPa except for the bilge and pit fires which are based on 13.78 kPa.
2. The design propane demand for each building is:
   B1 79 + 88 or 167 L/s
   B2 9 + 9 or 18 L/s
   B3 186 L/s
   B4 186 L/s
3. The design propane demand for the four buildings together is: 168 + 19 + 186 + 186 = 559 L/s

Table 7 (Continued)
19F3 and 19F3B Structures

AGENT USAGE

BLDG	CLASS OF FIRE	NO. OF FIRES/ CLASS	NO. OF HOSES 40 mm	WATER L/s	AFFF 6% L/s	PKP/ FIRE kg	CO2/ FIRE kg	WATER TIME min
First Day PM								
B3	B	30	51	8				3
B4	B	30	51	8				3
Second Day								
B1	B	27	25	6				3
	B		25		6	114		1
B2	A	9	51	6				3
	B	9	25	6		3		3
	C	9 7.5						
	C	9 7.5	-					
63 B3 or								
B4	D	12	51		8			1
Alternate		9	25	6				3
			25		6	5		1

Notes:
1. PKP should be used in 9 of the 27 fires in the B1 building.
2. The design water demand for each building is:
   B1 (6 + 6) x 2 or 24 L/s
   B2 6 x 2 + 6 or 18 L/s
   B3 8 x 2 or 16 L/s
   B4 8 x 2 or 16 L/s
3. The design water demand for the four buildings together is:
   24 + 18 + 16 = 58 L/s
4. B1 should have nine fires/hour.
5. B2, B3, and B4 should have 15 fires/hour.
6. In B1 each team (12 men) should approach a fire from each of three entryways.
7. B1 fire heights 3048 to 3658 mm.
8. B2 fire heights 3658 to 4572 mm.

Table 7 (Continued)
19F3 and 19F3B Structures

Notes (Continued):

9. PKP and CO_2 in B2 should come from portable extinguishers; 9 CO_2 charges for PKP bottles required per class.
10. Each class should use 72 OBA canisters with each canister being used three times.
11. B3 should have foam provisions similar to B4 so they can be used interchangeably.

TOTAL UTILITIES

	CLASS DAY 2	WEEKLY	MONTHLY
Propane	1 584 800 L	4 754 400 L	69 584 L
Water	265 300 L	795 900 L	3 183 600 L
AFFF Concentrate	5738 L	4548 L	18 192 L
PKP	687 kg	545 kg	2179 kg
CO_2	64 kg	191 kg	763 kg

Notes:
1. The water category includes the water portion of the AFFF (94 percent water, 6 percent AFFF for design).
2. 70 percent of the water usage for a class occurs on the first day of class. However, since the successive classes overlap, the design daily water consumption equals the values for one 2-day class.
3. The monthly consumption equals four times the weekly values.

Table 8
19F3 and 19F3B Ventilation Air

BUILDING COMPARTMENT		MAXIMUM PROPANE DEMAND L/s	VENTILATION AIR OUT AT 315 degrees C L/s	BUILDING VENTILATION AIR OUT L/s
B1	Area 1	79	14 113	63,500
	Area 2	88	15 859	
B2	Area 1	9	4342	8685
	Area 2	9	4342	
	Area 3	2	1086	
B3		186	56 640	56 640
B4		186	56 640	56 640

Note: Fan static pressure should be determined by bringing 16 degrees C air through the louvers and exhausting 315 degrees C through the exhaust system.

3.14.4 Electrical

a) Provide 120/208 V, three-phase service to each of the structures as follows:

B1 building	70 kVA
B2 building	37.5 kVA
B3 and B4 building	25 kVA each

b) Provide the following spare conduits from the instructor's station located at the of building B1 to B2, B3, and B4 buildings as follows:

B2 Building	3 - 76 mm conduit
B3 Building	3 - 76 mm conduit
B4 Building	3 - 76 mm conduit

The above conduits should be used only by the device contractor for both power and control wiring. Power and control wiring should be run in separate conduits.

3.15 19F3A and 19F3C Structures

3.15.1 General. The 19F3A and 19F3C structures will be used to train the General Shipboard Firefighting Training Course, J-495-0412; Advanced Shipboard Firefighting Evaluating Course, A-495-0419; and Advanced Shipboard Firefighting Team Training Course, J-495-0424. The structure is designed to train in a single shift an 0412 class of 60 students and can train up to four classes or 240 students each week; an 0419 class of 30 students and can train up to one class or 30 students each week; and an 0424 class of 30 students and can train up to two classes or 60 students each week. Splitting the year evenly, this trainer can teach 6000 students the general course and 1500 students the advanced team course annually.

3.15.2 Architectural. Floor plans for the 19F3A and 19F3C structures are in Appendix D.

3.15.2.1 Layout

a) The 19F3A and 19F3C structures are a single building which includes 19F1A and 19F1B type structures and 19F3 and 19F3B-B3 buildings connected by a large covered staging area. The respective portions of the 19F3A and 19F3C structures should duplicate the 19F1A, 19F1B, 19F3, and 19F3B-B3 buildings with the exceptions presented herein.

b) Compartments in the 19F1A and 19F1B portions of the structure have been enlarged and fireplaces have been relocated to accommodate the larger General Firefighting Course classes. The 0412 students should stage at ground level and in adjacent compartments on the second floor. Students should not travel between floors during a training scenario. Trainees in the 0424 course should travel between floors and a landing should be provided midway in the inclined ladder leading to Compartments 1 and 2. Doors leading from fireplace compartments in the 19F1A and 19F1B portions should be watertight. Those used by the trainees should be quick acting.

c) The pit fire, B3, or B4 portion is the same as for the 19F3 and 19F3B structures.

d) A 4572 mm by 4572 mm locker with an exterior access should be provided for OBA storage and should be designed as a repair locker. Standard OBA cabinets should be provided in the OBA locker. A wild hose demonstration area is required for teaching in the 19F3A and 19F3C structures. Where the climate allows year around training outside, the wild hose demonstration area should be outside. Trainees would watch the demonstration from the open sides of the staging area. In severe weather locations, the wild hose area should be provided in an area enclosed on three sides with the trainee side open. Means with unrestricted visibility should be provided to protect the bleacher from the hose water spray (a Plexiglas barrier meets this requirement). Refer to par. 2.4.2. Water should come from the HS2 hose station on the opposite side of the staging area.

e) Bleachers should be required in the 19F3A and 19F3C structures and should be capable of seating 120 people.

f) Demonstrations of portable extinguishers should be conducted on the B3 side of the staging area.

g) The staging area should be constructed of concrete or steel grating with appropriate floor drains. If bulk dry storage is to be located underneath the staging area, then a waterproof construction should be used. Subsurface storage should not be considered where there is a high water table or where flooding is probable. At least one-third of ventilation air for pit fireplace exhaust fans should be supplied into staging area.

h) The ventilation system should be manifolded such that Compartments 1, 2, 5, and 6 are on a separate system served by two equal sized exhaust fans. Compartments 3, 4, 7, and 8 should be on a separate system served by one exhaust fan.

3.15.2.2 Doors and Hatches. Doors leading from Compartments 1 and 2 to the staging area should be quick acting and watertight with 180 degree swing. The door leading to Compartment 2 should be installed in a removable panel such that when the door and panel are removed, a 914 mm by 2134 mm minimum opening is

available for the transfer of large equipment. The door should be used for installation and maintenance. A 1829 mm wide, 2134 mm high door should be located in the staging area to accommodate large equipment on hand trucks. The door should have a ramp access. Forklift truck access is not required.

a) First floor burner room doors should be located at each end of the burner rooms. They should be exterior doors except for the northwest corner which should be in the extended stair column. Second floor burner room doors should be accessed from the stair columns as in the 19F1A.

b) A large hatch should be provided at the top of the inclined stairs leading from the first floor and the second floor.

3.15.2.3 Fireplaces. For exact dimensions of fireplaces incrementally by compartment, see Table 9.

3.15.2.4 Instructor's Station. The instructor's station and the electrical room below the instructor's station should be similar to the rooms of the 19F1A and 19F1B. Interior dimensions should be approximately 13 411 mm by 3048 mm. Controls for the pit fire, B3, or B4 portion should be installed in the instructor's station.

3.15.2.5 Miscellaneous

a) No hose drying area is required but provide the following two items for hose drying: an outside hose drying rack and a heated storage for rolled up 15 240 mm long hoses. Rolled hoses should be stored vertically in storage racks. Racks should be designed to hold two rolls high and be located in the OBA locker.

b) P-250 training is a part of the 0412 course; therefore, a facility is required. P-250 training is a requirement for 19F3A and 19F3C structures.

Table 9
Dimensions for 19F3A and 19F3C Structures Fireplaces

COMPARTMENT	TYPE	SIZE
Compartment 1 7620 x 6096 mm	Bilge Fire, Oil Spray	2 rectangular areas 1524 x 3658 mm, 6096 x 1524 mm
Compartment 2 7620 x 6096 mm	Bilge Fire	2 rectangular areas 1524 x 3048 mm, 1524 x 3048 mm
	Obstruction	914 x 1829 mm, 914 mm H
Compartment 3 5487 x 6096 mm	Clothes Dryer	1981 mm H x 1372 mm W x 1219 mm D
	Electrical Panel	305 x 1219 mm (Note 4)
	Obstruction-Laundry Table	762 x 1524 mm (762 mm H)
Compartment 4 5487 x 6096 mm	Deep Fat/Stack Hood	610 x 1524 mm (Note 4)
	Wire Bundle (Cable Raceway)	3048 x 457 mm (Note 4)
	Closet	1219 x 1829 mm
Compartment 5 7620 x 6096 mm	Escape Trunk (No exit)	1524 x 1524 mm
	Weapons Enclosure	2134 x 2134 x 2438 mm H
	Storage Room	2134 x 2134 x 2438 mm H
Compartment 6 20 726 x 7620 x 6096 mm	Mattress/Locker Fire	3048 x 1067 mm
	“Dummy" Mattress Fire	2134 x 1067 mm
Compartment 7 5487 x 6096 mm	Motor Generator Wall	914 mm off each wall
	Vent Duct	3658 x 610 mm (Note 4)
	Enclosed Pit Fire	4572 x 4572 mm
Compartment 8 5487 x 6096 mm	Radar Display Console	610 x 914 mm

Table 9 (Continued)
Dimensions for 19F3A and 19F3C Structures Fireplaces

Compartment 8 (Continued):	
Trash Can	1829 x 1829 mm

Notes:
1. The cable raceway fire should be mounted 2438 mm above the grated floor and should be installed in an enclosure with 2591 mm high walls.
2. Bilge fire heights - Maximum 2743 mm.
3. Pit fire heights - 3658 x 4572 mm.
4. No hole in the floor is required for these fireplaces.
5. Dimensions for fireplace compartment sizes should be clear. When compartments have refractory coatings and steel plate liners on walls, the inside clear dimension should be from liner to liner.
6. Facility to provide fireplace steel gratings. NAWCTSD will supply drawings and cost estimate to the facility architect during design phase for all compartments and pit fireplace. Facility will also provide grating supports for pit fireplace.

3.15.3 Mechanical

3.15.3.1 Use Rate. Utilities for the 19F3A and 19F3C structures (see Table 10) are designed to support four general classes of 60 trainees each week. During the first session, the class should go to the pit fire location. The class should be divided into four hose teams of 15 trainees each. Two hose teams at a time should fight the fire alternately at a rate of 15 fires per hour.

a) During the second session this class should again be divided into four groups of 15 trainees. One group should go to Compartment 1, one should go to Compartment 2, one should go to Compartments 3 and 4, and one should go to Compartments 5, 6, 7, and 8. Each group should stay at a location for one hour then rotate to a different location. Each group should go to either Compartment 1 or 2 but not both.

Table 10
19F3A and 19F3C Structures

PORTION OF BUILDING	MON AM	MON PM	TUE AM	TUE PM	WED AM	WED PM	THU AM	THU PM	FRI AM	FRI PM
Classroom	V	W				X	Y			
Pit Fire/		V	W				X	Y		
Demonstration				V	W				X	Y
Bilge Fire				V	W				X	Y

Notes:
1. The 2 day-course includes a classroom session before fire training and a demonstration session after it.
2. Demonstration should be in front of the pit fireplace, therefore during the second day, another class should not be using this area.
3. Classes, 60 trainees each, are designated as V, W, X, and Y.

PROPANE USAGE

CLASS OF FIRES	NO. OF FIRES/ CLASS (60 MEN) 2 DAYS	FIRE TYPE	PROPANE DEMAND L/s MIN.	PROPANE USE PER FIRE L	TOTAL PROPANE/ GROUP FOR 2 DAYS
First Day PM					
B	30	Pit	186	16 725	501 759
Second Day AM					
B	20	Bilge Compartments 1 and 2	83	12 395	247 908
B	32	Deep Fat Fryer/ Fryer Hood	9	849	27 168
A	24	Mattress/Locker, Trash Can, etc.	9	849	20 376
C	24	Radar Display, Elect. Panel, etc.	5	425	10 188
	130 fires/class				807 116 L/class
					22 046 L/class

Table 10 (Continued)
19F3A and 19F3C Structures

Notes: 1. Propane demand is based on a gas pressure at the burner of 7 kPa except the bilge and pit fires require 14 kPa.
2. The design propane demand for the building is: 186 + 83 + 83 + 9 + 9 = 370 L/s.

AGENT USAGE

CLASS OF FIRE	NO. OF FIRES/ CLASS	NO. OF HOSES 40 mm	WATER L/s	AFFF 6% L/s	PKP/ FIRE Kg	CO_2/ FIRE kg	WATER TIME min
First Day PM							
B	30	51	8				3
Second Day AM							
B	20	25	6				2.5
		25		6	11		1
B	32	25	6		3		3
A	24	51	6				3
C	24					3	-
	130						

Notes: 1. PKP should be used in 7 of the 20 bilge fires.
2. The design water demand is: (8) 2 + (6 + 6) 2 + 6 + (6) 2 = 58 L/s.
3. PKP and CO_2 used on the fryer and electrical fires respectively should come from portable extinguishers; 32 - CO_2 charges for PKP bottles should be required for each class.
4. Each 0412 class should use 72 OBA canisters. Each canister should be used by three students.

Table 10 (Continued)
19F3A and 19F3C Structures

TOTAL UTILITIES

	CLASS 2 DAY	MONTHLY
Propane	792 400 L	7 414 600 L
Water	197 080 L	23 376 330 L
AFFF Concentrate (100%)	432 L	21 224 L
PKP	182 kg	2633 kg
CO_2	76 kg	1226 kg

Notes:
1. The water category includes the water portion of the AFFF (94 percent water, 6 percent AFFF for design).
2. 45 percent of the water usage for a class occurs on the first day of class. However, since the successive classes overlap, the design daily water consumption equals the values for one 2-day class.
3. The greatest weekly consumption is four times that for a single class.
4. The 2-day class totals are for a 0412 class.
5. The weekly rate is four times the 2-day class rate.
6. The monthly consumption includes seven 0412 classes and six 0424 classes.

b) The following utility rates should easily support the 0419 and 0418 courses because both have fewer fires per class. The 0418 course, when it is taught in the 19F3A and 19F3C, should be similar to when it is taught in the 19F1A and 19F1B. Only one course type can be taught in the 19F3A and 19F3C at any given time.

3.15.3.2 Firefighting Agents

a) There should be a foam reel in Compartment 2 which should get its foam from the FS on the east side of the roof and a FR between the Compartment 1 and 2 exterior doors. This second FR should get its foam from the FS on the west side of

the roof. The interior FR is fed from the east FS because both stations serve the same group during 0418 training. During 0412 training, each FR should be served by a separate FS.

b) Provide six 6.81 kg CO_2 cylinders, four 14 kg PKP cylinders, and one 9 kg PKP cylinder. These cylinders should be provided by the facility contractor and located and installed by the station personnel. Halon should be simulated in Compartment 1.

3.15.3.3 Ventilation. The design ventilation less the pit fire or the 19F1A, 19F1B portion of the structure should be based on the simultaneous operation of compartments or 49 088 L/s "air out." The minimum ventilation should be 3776 L/s. The design ventilation for the pit fire, B3, or B4 portion of the structure should be 56 640 L/s "air out." For ventilation air per area, see Table 11.

3.15.3.4 Air Conditioning. The electronic equipment in the instructor's station is expected to add 6739 W to the air conditioning load. Normal occupancy should be six people. The adjacent electrical room should have an air conditioning load of 9669 W due to equipment and a two-person occupancy. Individual thermostatic control for each area is required.

3.15.4 Electrical

3.15.4.1 Power. The power for the device is 100 kVA. Provide 120/208 V, three-phase service.

3.15.4.2 Lighting. The staging area should be lighted for training after dark. When walkways and stair columns associated with the 19F1A and 19F1B portions of the structure are enclosed, they should be lighted.

3.16 19F4 and 19F4A Structures

3.16.1 General. The 19F4 and 19F4A structures should be used to train the Shipboard Aircraft Firefighting Course, J-495-0413 and the Aviation Facility Ship Helicopter Firefighting Team Training Course, J-495-0414. The structure is designed to train

two 2-day 0413 classes of 60 students and one 1-day 0414 class of 30 students a week. Approximately 6000 students can be trained a year.

3.16.2 Architectural. Floor plans for the 19F4 and 19F4A structures are in Appendix E.

Table 11
19F3A and 19F3C Ventilation Air

COMPARTMENT	PROPANE DEMAND L/s	VENTILATION AIR OUT AT 316 Degrees C L/s
1	83	14 774
2	83	14 774
3	5	2171
4	9	4342
5	9	4342
6	9	4342
7	5	2171
8	5	2171
Pit	186	56 640

Note: Fan static pressure should be determined by bringing 16 degrees C air through the louvers and exhausting 316 degrees C through the exhaust system.

3.16.2.1 Layout. The 19F4 and 19F4A structures are designed to simulate aircraft fires onboard ship. The structure consists of an open training deck measuring 34 138 mm by 20 117 mm with one fireplace. The training deck should be constructed of concrete. The fireplace should be 15 850 mm by 10 973 mm centered leaving two 9144 mm wide and two 4572 mm wide areas for staging. These 4572 mm wide areas are acceptable even though the fire should be fought from any one of the four sides. There should be no more than three to five trainees on a 40 mm hose and 7 to 10 trainees on a 65 mm hose. The remainder of the class should observe the exercise. The perimeter of the fireplace should be lined with

70 mm thick refractory and a vertical stainless steel plate in accordance with Appendix A, Figure A-9 and should be designed for a load of 295 kg per linear foot. No coaming should be required around the outside perimeter of the training deck; however, a safety rail should be provided. This rail should be constructed of 38.1 mm steel pipe with two horizontal rails. Horizontal rails should line up vertically to prevent personnel from falling off the training deck. The safety rail should not have any netting or webbing.

a) The training deck should consist of a 102 mm lightweight heat-resistant concrete topping on a 6 mil polyethylene bond breaker, on a concrete structural slab. The topping slab should be designed to be sacrificial, provided in sections, and capable of thermal expansion. Expansion joint material should consist of a ceramic fiber blanket capable of resisting temperatures of 1093 degrees C minimum. The training deck elevation should be 2438 mm above grade to allow air access to the underside of the fireplace and to allow space for the electrical, foam, and storage rooms (each with a 2134 mm minimum ceiling height) beneath. Where the training deck is located above the first floor rooms it should be waterproofed. The crawl space under the training deck should maintain 1829 mm of clear height. There should be no doors leading from the ground level rooms directly into the crawl space and utility penetrations should be sealed airtight. Stairs should be provided at three locations to afford personnel access to the training deck. Additional ground access should be provided at each foam training deck. The area under the foam decks and stairs should allow free air access to the wire mesh covered openings.

b) Walls between the first floor rooms and the crawl space should be airtight. Any utility penetrations should be sealed. This precludes propane from drifting into these rooms. The crawl space should be bounded by two walls with floor to ceiling wire mesh covered openings. The other two walls should contain 4572 mm wide air tunnels with similar wire mesh covered openings.

c) Columns used to support the perimeter of the fireplace should be no greater than 5487 mm on center. These columns should be located as indicated on the floor plan in

Appendix E. Refer to par. 3.16.2.6 for other structural features pertaining to the fireplace opening.

3.16.2.2 Foam Deck. Eight identical foam decks should be located around the perimeter of the training deck. The floor of the foam deck should be constructed of steel grating and located 1067 mm below the training deck. The foam deck should include firefighting equipment found on both a destroyer deck (DD) and an aircraft carrier deck (CV). Each deck should be configured in accordance with Appendix E, Figure E-3. Although this combined deck is not set up to duplicate a station found on ships, appropriate gear is available for use. Included should be a foam reel with 38 100 mm of 40 mm hose, two faked hose racks, with 30 480 mm of 65 mm hose each, a stand pipe (SP) hose station with 1219 mm applicator, two faked hose racks, each with 30 480 mm of 40 mm hose, an electrical foam pump start station, and a communications station. Communications should be provided by the device contractor. Foam should be delivered to the deck through a 80 mm pipe with a 40 mm branch leading to the reel through a ball valve. The 80 mm pipe should terminate in a 65 mm service valve, in accordance with NAVSHIPS Dwg. 803-1385712. Both the foam pipe and the SP hose station should be deactivated by a valve out of sight of the trainee which can be operated by the instructors. The safety rail can be used for supports for the faked 60 960 mm of 40 mm hose. The deck steel grating should be sectionalized and securely fastened so it can be easily removed for maintenance.

a) The foam station is activated by depressing the electric foam pump start button which opens the water control valve and starts the proportioning pumps pressurizing the system with proportioned (3 percent) foam. See Figure E-6 in Appendix E. The fire can then be fought with both 40 mm and 65 mm hoses. The amount of foam used for any one training exercise should be 500 gpm or two 65 mm hoses. To depressurize the system, the electric foam pump stop button should be depressed.

b) On the smaller ships the foam reel is supplied by an FS station using an FP-180 foam proportioner; however these reels are not on the flight deck. The device 19F4 is for training firefighting techniques on aircraft decks; the FP-180 training should be accomplished onboard ship.

c) Access to the foam deck should be by inclined stairs from the training deck and a vertical ladder from the ground. The foam deck should have a safety railing around its perimeter. Two safety chains should be provided at the access openings for the ladder to grade and at access to training deck. The vertical ladder should only be used as an emergency exit from the foam deck.

3.16.2.3 Crash Lockers. Adjacent to main access stairs to the training deck should be two crash lockers with dimensions 3048 mm by 4572 mm each. These lockers should be constructed the same as repair lockers. They should be used to store hoses, proximity suits, porta saws, jaws of life, etc. These items should be procured by the using activity through collateral equipment. Ventilation is required in the crash lockers at a rate of 6 air changes per hour.

3.16.2.4 Instructor's Station

a) A two-story high instructor's station should be located 15 240 mm from a corner of the fireplace. Its siting should consider the prevailing wind. It should be upwind of the fireplace and the sun should not interfere with the view of the training deck.

b) The instructor's station and electrical room below should be 3048 mm by 4572 mm, have 2743 mm high ceilings and a computer floor. A computer floor is not required for the electrical room. Access to the second floor should be by exterior stairs. The instructor's station should have a 2438 mm by 762 mm high window overlooking the training deck mounted 610 mm off the computer floor.

c) The DTC is located in the electrical room.

d) The exterior wall and windows of the instructor's station facing the fireplace should be designed to be capable of withstanding a surface temperature of 74 degrees C.

3.16.2.5 Doors. Doors associated with the 19F4 structure should be 914 mm wide hollow metal doors. This structure is not an all weather trainer. The 19F4 structure is open to the

elements and has no provisions for removal of ice and snow; however, associated liquid systems should be freeze protected.

3.16.2.6 Structural Features

a) A device contractor supplied steel framing should support the mockups and grating in the fireplace opening and at the ground storage area. The foundation for this steel framing should be provided with the facility as follows:

(1) A reinforced concrete mat foundation should be provided in the crawl space at the 15 850 mm by 10 973 mm fireplace opening and should support concentrated loads from device support columns. The concrete mat should be pile or grade supported as required by the site soil conditions. The concrete mat should be designed for the following column reactions and spacings:

Location	Column Grid Spacing	Column Reaction
Center 4877 mm by 4877 mm area	1067 mm on center	3405 kg
Remaining fireplace area	1905 mm on center	4812 kg

(2) Column bearing area should be approximately 305 mm square and should be set in a grout bed and anchored directly to the mat foundation. Minimum column distance to edge of mat should be 610 mm. The mat should be designed to give the device contractor the flexibility to locate columns anywhere on the mat subject to minimum column grid spacing, maximum column reactions, and minimum edge distance.

(3) Minimum mat thickness should be 203 mm. Provide a 13 mm minimum expansion joint at the mat perimeter isolating the mat from the remainder of the crawl space slabs. Minimize the crack control joints in the mat foundation. Slope mat from center high point to drains. Refer to Appendix E.

b) The training deck should be designed as a standard training floor, 27 kg per square foot live load. There should be no wheeled vehicles on the deck of the 19F4 structure. Aircraft carriers use a forklift truck to aid in rescuing the

pilot. The 19F4 trainer should have a 91 kg mannequin strapped in a seat 2438 mm above the deck which should be rescued using a portable ladder.

c) Some of the larger ships use a P-16, self-propelled fire truck, to fight deck fires. Because the trainer deck should be above grade due to the propane fuel, resulting size limitations prohibit the use of the P-16. Another negative aspect of P-16 use with this structure is that it would require automotive type maintenance which is not normally associated with firefighting schools.

3.16.2.7 Miscellaneous. Ordnance mockups should weigh approximately 45 kg and be positioned manually by the trainees.

3.16.3 Mechanical

3.16.3.1 Use Rate. The 19F4 structure (see Table 12) has utilities designed to support three classes of 60 trainees each week. The class should be divided into four teams of 15 trainees each with two team leaders and one center leader. Two teams at a time should fight fires alternately at a rate of three fires per hour. The structure should be used for half a day each day of the week for two 2-day classes and one 1-day accelerated class. Each class should receive 5 hours of fire exposure time.

3.16.3.2 Firefighting Agents

a) Flush deck nozzles are used on the flight deck of a ship as a countermeasure to prevent accumulation of contaminants during a chemical biological radiation (CBR) attack and with foam to aid in fighting fires. On the 19F4 structure, use deck nozzles for demonstration purposes only and supply with water only. Nozzles must be installed in the fireplace grating by the device contractor. A 152 mm water line must terminate near the edge of and below the trainer deck with a motorized valve. The water line must have a manual shutoff valve and a pressure regulator valve prior to the motor operated valve. The water pressure for the flush deck nozzles should be the fire main pressure. The tie-in point for the device contractor should be the outlet of the motorized valve.

Table 12
19F4 and 19F4A Structures

CLASS SCHEDULE

	MON		TUE		WED		THU		FRI		
	AM	PM	AM	PM	AM	PM	AM	PM	AM	PM	
Classroom	X	X					Y	Y			Z
Structure			X	X					Y	Y	Z

Note: Classes are designated as X, Y, Z.

PROPANE USAGE

CLASS OF FIRE	NO. OF FIRES/ CLASS OF 63 MEN	FIRE TYPE	PROPANE DEMAND L/s		PROPANE USE PER FIRE L^3	TOTAL PROPANE/ CLASS
First Day PM	6	Fixed Wing	2549	5/	283 000	1 698 000
B						
Second Day PM	6	Helicopter	2549	5/	283 000	1 698 000
B						
B	3	Gas Tank	34		6198	18 593
	15 Fires/ Class					3 414 593 L/ class 12 496 L/ class

Notes:
1. Propane consumption and demand for the 1-day class are the same as those for the 2-day class.
2. The design propane demand for the bldg. is 2549 L/s.
3. Propane is based on a gas pressure at the burner of 14 kPa.
4. Propane supply pressure at the trainer entry (device contractor hookup) should be 69 kPa.
5. The average propane demand is 944 L/s.

Table 12 (Continued)
19F4 and 19F4A Structures

AGENT USAGE

CLASS OF FIRE	NO. OF FIRES/ CLASS	NO. OF HOSES	AFFF 3% L/s	WATER TIME min
First Day PM				
B	6	2 - 65 mm	16	5
Second Day PM				
B	6	2 - 65 mm	16	5
B	3	2 - 65 mm	16	3

Notes: 1. The design water demand should be 8 + 8 + 16 + 16 = 48 L/s for the occasional times when two 64 mm and two 38.1 mm cooling water hoses are used together. This is the total demand for the structure. Do not add in the water for foam.
2. The maximum 3 percent foam solution demand should be 16 + 16 = 32 L/s.

TOTAL UTILITIES

	CLASS	WEEKLY
Propane	3 414 593 L	10 243 779 L
Water	136 440 L	409 320 L
AFFF Concentrate (100%)	3923 L	15 160 L
PKP	None	

Notes: 1. The water category includes the water portion of the AFFF (97 percent water, 3 percent AFFF for design) and the flush deck nozzle water.
2. 46 percent of the water usage for a 2-day class occurs occurs on the first day of class. However, since the whole course is taught in one day to the accelerated students, the design daily water consumption equals the full class value.

b) The flush deck nozzles should be controlled from the instructor's station only, by activating the motorized valve. The water demand for the 19F4 structure should not be affected by these nozzles. Deck nozzles should not be used simultaneously with other agents.

c) Agents used to fight aircraft deck fires should come from the foam deck. Foam should be used exclusively to fight aircraft fires. Water should be used to cool ordnance after the fire is out and used to wash contaminate off the deck.

d) PKP should not be used as a firefighting agent with this structure.

3.16.3.3 Ventilation

a) The wind generator should not be used because of crosswind problems, safety, noise and power consumption. Natural wind should be used to provide the air movement required. In an effort to retain the advantage of training with a upwind or downwind approach to the fire, the device should be configured so the fire can be attacked from any one of its four sides with equal realism. Foam decks are also located so the fire can be approached from any side.

b) Wire mesh covered openings bordering the crawl space should be as large as the structure will allow to provide as much air under the fireplace as possible. Louvers and backdraft dampers for the 19F4 trainers are not required since neither artificial smoke nor PKP is used.

3.16.3.4 Air Conditioning. The electronic equipment in the instructor's station is expected to add 1000 W to the air conditioning load. There is no electronic equipment (device) cooling load for the electrical space below the instructor's station. This electrical space should be cooled and heated.

3.16.3.5 Miscellaneous

a) Artificial smoke should be used to help trainees determine wind direction and to indicate, along with the sound of an explosion, ordnance that has heated beyond its cook-off point.

b) The courses taught on the 19F4 and 19F4A trainers require exposure to the wild hose facility. The wild hose may be taught on the ground adjacent to the 19F4 structure. Only one wild hose facility should be required at a firefighting school.

c) The propane supply should terminate at the side of the structure as shown in Appendix E, Figure E-1.

3.16.3.6 Foam Proportioning

a) The foam for foam decks should be proportioned in the foam room with less than 3 percent AFFF solution being piped to each foam standpipe. Concentrate should be pumped to the mixing tank in the foam room. An industrial type proportioner should take 100 percent solution from the mixing tank and produce less than 3 percent solution. A balanced pressure system should be used as shown on Figure E-6 of Appendix E.

b) The high capacity fog foam generator (HCFF) or FP-1,000 are used aboard ship to proportion firefighting foam. There are aspects of this equipment which are not conducive to firefighting training. The HCFF or FP-1,000 should not be incorporated in the 19F4 or 19F4A for training purposes. This equipment type training should be accomplished aboard ship.

3.16.4 Electrical

3.16.4.1 Power

a) Power required for the device is 85 kVA. Provide 120/208 V, three-phase service.

b) Provide eight 50 mm spare conduits from the two-story instructor's station building to the 19F4 training structure. These conduits should be used only by the device contractor for both power and control. Power and control wiring should be run in separate conduits.

3.16.4.2 Lighting. The 19F4 structure should be lighted for nighttime operation. However, provide security lighting. The crawl space should be fully lighted with switches by doors.

3.17 19F5 and 19F5A Structures

3.17.1 General. The 19F5 and 19F5A structures should be used for initial exposure or indoctrination firefighting training. The structure is designed to train one class of 160 students and can train five classes each week operating on a single shift.

3.17.2 Architectural. Floor plans for the 19F5 and 19F5A structures are in Appendix F.

3.17.2.1 Layout. The 19F5 and 19F5A structures should consist of six fireplace compartments, three on either side of a large staging area. Students should line up in the staging area in front of each compartment and fight the fire through the doorway. Fireplaces should run simultaneously.

Two storage rooms should be located off of the staging area which should provide access to the burner room. Both of the storage rooms should be permanently heated to 10 degrees C.

3.17.2.2 Ceilings. Ceilings in the fireplace compartment should be 3658 mm high. The roof over the staging area should be high enough to provide line of sight between the second story instructor's station and the compartments. The roof over the compartments should allow 2438 mm clearance for maintenance of the exhaust system and smoke generation equipment. An equipment space over the burner room may also be required. The ceiling height in the egress chamber should be 2438 mm minimum.

3.17.2.3 Doors. Doors leading to fireplace compartments and associated with the egress chamber should be quick-acting watertight doors. Other doors should be hollow metal. A 1829 mm wide by 2134 mm high door should be located in the staging area to accommodate large equipment on hand trucks. The door should have ramp access. No forklift trucks should be used.

3.17.2.4 Fireplaces. Exact dimensions of burn areas are listed in the table below by fire type. Compartments are 3048 mm by 3048 mm clear in the plan.

Trash Can	1829 mm by 1829 mm (floor opening), located 305 mm from the back wall liner
Bilge	3048 mm by 3048 mm clear (floor opening)
Electrical Panel	406 mm (wall mounted)

Fireplace compartments should have refractory lined walls and ceilings. In addition, compartment walls should have steel plate liners to protect walls from the water hose stream and to maintain compartment temperature. The bilge fireplace compartment ceiling should also have steel plate liner. The electrical panel and trash can fireplaces should have grating floors. The bilge fireplace should have a chained doorway, floor, and a fireplace support as shown on Appendix A, Figure A-9. Required compartment dimensions should be clear dimensions from refractory wall coating to steel plate wall liner. Fireplace compartments should be thermally isolated from the facility structure to allow for thermal expansion.

Note: Facility to provide fireplace steel gratings. NAWCTSD will supply drawings and cost estimate to the facility architect during design phase.

3.17.2.5 Instructor's Station. The 19F5 and 19F5A structures should include two 3658 mm by 3658 mm instructor's stations. One for each set of fireplace compartments. The 19F5 and 19F5A structures should be separated by an electrical room measuring 3658 mm by 7925 mm. All three rooms should be located on the second floor along the side of the staging area and should have a 305 mm high raised floor. Access to the instructor's stations should be by stairway or through the electrical room. Each instructor's station should have a 3048 mm by 762 mm window overlooking the staging area. The lower edge of window should be 610 mm off of the computer floor.

3.17.2.6 Egress Chamber. An emergency egress chamber should be provided which should present the trainee with a loss of light and a high temperature, smoky environment. The trainee should enter and leave the chamber through smoke filled entryways. These entryways should be designed to block light from entering

the main chamber. Ventilation should be such that no smoke is allowed to enter the staging area. Smoke should not be introduced in the main chamber.

a) Once inside the dark chamber, the trainee should follow a rope lanyard which should eventually lead him to the smoke filled exit. The main chamber should be heated to 43.3 degrees C during the training scenario.

b) Provide a watertight door in the steel partition between side 1 and side 2 of the chamber and watertight openings without doors in the steel partitions making up the entryways, refer to Appendix F, Figure F-1, for details. Walls and the ceiling should be sealed with a coating chemically resistant to triphenyl phosphate.

3.17.2.7 Miscellaneous

a) No OBA's should be used by trainees, therefore a fixed OBA disposal area is not required.

b) Provide a hose drying rack capable of storing twelve 15 240 mm lengths of hose. Once loaded, the hose drying rack should be hoisted electrically to a mezzanine located 2743 mm above the floor. The mezzanine should be accessible from the second floor. Material for the hose drying rack should be lightweight. A heavy duty wrench-hoist system should be provided.

c) The P-250 portable, gasoline engine driven water pump should be demonstrated in front of the bleacher area. Refer to the requirements stated herein. No raised platform is required.

d) Provide bleachers for seating 250 students.

e) Provide a wild hose demonstration area. The space should be approximately 6096 mm by 6096 mm by 6096 mm high with an opening facing the bleachers to allow observation from the staging area. Means with unrestricted visibility should be provided to protect the bleachers from the wild hose water spray.

3.17.3 Mechanical

3.17.3.1 Use Rate. Utilities for the 19F5 and 19F5A structures are designed to support five classes of 160 students each week. A class should be divided into two groups (A, B) of 80 men. Group A should spend the morning fighting fires in the six fireplace locations while group B watches the demonstration, e.g., wild hose, P-250 pump, portable extinguishers, etc., and goes through the emergency egress chamber. In the afternoon the two groups switch. A typical schedule should consist of five classes per week, 800 trainees for 52 weeks or 40,000 students per year. For class schedule and utilities requirements, see Table 13.

3.17.3.2 Firefighting Agents. Firefighting water entering the structure should come through a motorized valve. This valve should be controlled from the DTC and act as an emergency shutoff valve in case of an uncontrollable hose.

a) Six standpipes, two foam stations, and two foam reels should be located in the center of the staging area. Only the reels and agents should be used for training purposes. The foam proportioning equipment which feeds the reels should be operated by instructors. Therefore, it can be standard commercial. The design should allow for any two reels to operate simultaneously, one for each bilge compartment.

b) Provide a 9 kg portable PKP extinguisher outside of each bilge compartment. Provide a 6.81 kg portable CO_2 extinguisher outside of each electrical panel compartment. Additional extinguishers which should be used as replacements should be purchased as collateral equipment.

c) Hose stations in the 19F5 structure do not require the instructor operated hose station disabling valve.

Table 13
19F5 and 19F5A Structures

CLASS SCHEDULE

A	Monday	AM	240 fires
B		PM	240 fires

Note: The 2-day course includes a classroom session before the fire training.

PROPANE USAGE

CLASS OF FIRES	TOTAL NO. OF FIRES/ CLASS	FIRE TYPE	PROPANE DEMAND L/s min	AVERAGE FIRE DURATION min	PROPANE USE PER FIRE L	PROPANE/ CLASS FOR 1 DAY L
A	160	Trash Can	5	2	566	67 920
B	160	Bilge	31	2	4528	724 480
C	160	Electric Panel 480 fires/class	2	2	283	33 960 826 360/ class

Notes:
1. Each fireplace should have 10 fires/hour.
2. Maximum fires per shift is 480 fires. Classes larger than 160 students can be accommodated by reducing student fire exposure or extending the shift.
3. Great Lakes should train additional students with the same number of fires.
4. The propane demand is based on a gas pressure at the burner of 7 kPa except for the bilge fire which is 14 kPa.
5. The design propane demand for the structure is (5 + 31 + 2) x 2 = 76 L/s.

Table 13 (Continued)
19F5 and 19F5A Structures

AGENT USAGE

CLASS OF FIRE	NO. OF FIRES/ CLASS	NO. OF HOSES 40 mm FIRE	WATER L/s	AFFF 6% L/s	PKP/ FIRE kg	CO_2/ FIRE kg	WATER TIME min
A	160	2	6				2
B	160	1	6				2
		1		6	5		1
C	160	5					

Notes:
1. The design water demand is: ((6)2 + 6 + 6)2 = 48 L/s.
2. Portable PKP extinguishers should require 80 CO_2 charges per class.
3. No OBA's should be used.
4. Portable extinguishers should be used for fighting fires with PKP.

TOTAL UTILITIES

	CLASS 1 DAY	WEEKLY
Propane	820 700 L	4 103 500 L
Water	379 950 L	1 989 750 L
AFFF Concentrate (100%)	3456 L	17 282 L
PKP	73 kg	363 kg
CO_2	363 kg	1816 kg

Notes:
1. The water category includes the water portion of AFFF (94 percent water, 6 percent AFFF for design).
2. Continuous operation can be assumed for weekly and monthly consumption.

3.17.3.3 Ventilation

a) There should be an exhaust duct leading from each fireplace compartment with a separately operated motorized floating point damper. These ducts should come together above the compartment ceiling. The design capacity of exhaust fans for each side of the structure should be based on the simultaneous operation of fireplaces or 8686 L/s "air out." The minimum ventilation should be 472 L/s per fireplace or 1416 L/s for each side of the structure. For ventilation air per area, see Table 14.

b) Artificial smoke, butylated triphenyl phosphate, should be used in fireplaces and in the emergency egress chamber.

c) Each entryway of the egress chamber should be provided with 472 L/s of ventilation which should keep it under negative pressure so that the smoke should not migrate to the staging area. Exhaust grills should be located above the entry and exit on the inside and should draw air from the staging area through the doorway. Motorized dampers should be provided to allow remote adjustment of the entryway ventilation rate. A second fan should draw 472 L/s from each inner room of the egress chamber. The inner room fan should be used to clear stray smoke from inner rooms only after the exercise is complete. The inner room fan should not be on while trying to maintain 37.7 degrees C in the chamber. Interlock the fans to the entryway doors so they cannot run with the doors closed. The open door is the source of makeup air for the inner room exhaust fan. Heating of the egress chamber to 43.3 degrees C during training should be provided by the device contractor. Normal building heating should be provided.

3.17.3.4 Air Conditioning. Electronic equipment in each instructor's station is expected to add 1172 W to the air load. The air conditioning to the electric room adjacent to the instructor's station has an air conditioning load of 5860 W due to the equipment. The normal occupancy for each of the three rooms should be two people.

Table 14
19F5 and 19F5A Ventilation Air

COMPARTMENT	PROPANE DEMAND L/s	VENTILATION AIR OUT AT 316 degrees C L/s
Trash Can	5	2171
Bilge	31	5428
Electric Panel	2	1086

Notes:
1. The design ventilation for each side is 8685 L/s "air out." The minimum flushing ventilation should be as low as the fan can turn down but never lower than 1416 L/s "air in."
2. Fan static pressure should be determined by bringing 15.5 degrees C air through the louvers and exhausting 316 degrees C through the exhaust system.
3. Provide two 944 L/s fans for the egress chamber.

3.17.4 Electrical

3.17.4.1 Power. The power for the device is 50 kVA. Provide 120/208 V, three-phase service.

3.17.4.2 Lighting. The staging area should be lighted for training after dark. Fireplace compartments should be lighted for maintenance from underneath the grating. No shipboard type lighting is required in compartments of the 19F5 structure. Install guards on lights in staging area at the ceiling to protect lights from hose spray.

The egress chamber should have interior lighting for maintenance purposes only. The light switch should be exterior and away from the entry and exit doors.

Section 4: AGENTS AND APPARATUS

4.1 General. Substitute materials have been found to replace AFFF foam, PKP, and smoke. These substitutes were chosen to improve the trainee's environment, the treatability of the air and water effluents, and the economics of training. Equivalents other than brand names are acceptable as long as the substitute material meets the given chemical formula requirement.

Any reference to the use of the above agents in this document should be understood to mean the substitute mentioned below unless stated otherwise.

4.2 Aqueous Film-Forming Foam (AFFF)

a) AFFF is used extensively in the Navy for fighting fires aboard ship. Its main disadvantage in firefighting training is its toxicity to treatment plant bacteria and receiving stream oyster larva. The toxic characteristic did not respond to various treatment processes as measured by methylene-blue-active substance (MBAS). Therefore, the only two methods of disposal for AFFF contaminated waste water was hauling it away as a toxic waste or diluting it to under 200 ppm. The first option was prohibitively expensive and the latter alternative restricted the amount of foam to where it could only be used for demonstration purposes not for training.

b) Dilution is, however, the method of disposal of AFFF used by the fleet during the routine testing of shipboard firefighting equipment. When testing is done in harbor and coastal areas, the effluent is collected and stored until it can be transferred to shore. Once shoreside, it is metered into the municipal sanitary sewer system under permit.

4.2.1 Substitute

a) The substitute for AFFF is sodium dodecylbenzine sulfonate manufactured by Pilot Chemical Company of Avenel, New Jersey and marketed as Calsoft. It is also marketed by Whitco under the name Ultrawet K, by Textile Chemical Company under the name Calsoft, and by Stephan Chemical Company under the name

Nacconal 35SL. It is a common industrial surfactant. Of the many types of surfactants on the market, Calsoft was chosen because it was:

(1) Readily available in large quantities

(2) Nonflammable

(3) Disposable in effluent

(4) Biodegradable

(5) Acceptable for human health and safety

(6) Adequate in foaming action

(7) Stable at high temperature

(8) Minimally corrosive

(9) Cost effective for training

(10) Compatible with the flame control logic

b) Another substitute should not be attempted without thoroughly considering each of these characteristics.

c) Calsoft can be delivered in a wide variety of forms. The solid form comes in bags and drums. The liquid form comes in cans, drums, and by tank truck in varying concentrations. The liquid form is preferred for fire training.

d) Liquid Calsoft is sold in different concentrations because higher concentrations contain less water therefore less bulk for efficient shipping. However, 60 percent and higher concentrations of liquid Calsoft should increase handling problems for the user. In 60 percent concentrated form, Calsoft should be heated to be transferred. If 60 percent Calsoft ever cools below 10 degrees C, it should be heated and mechanically mixed before it can be used. Calsoft should be bought as a 40 percent concentrate which does not have to be kept heated except

for freeze protection. The concentrate is mixed half and half with water to make a 20 percent solution of surfactant which is referred to as 100 percent AFFF in this handbook.

e) Concentrates are diluted with water to the maximum extent practicable, consistent with maximizing realism, activating AFFF sensors, and minimizing cost. Foaming action should vary from site-to-site, based on water hardness. Experimentation at each site is required. The diluted AFFF surrogate is referred to as 100 percent AFFF in this handbook.

4.2.2 Handling System. The foam system for fire training should consist of bulk storage for concentrate, a mixing tank for preparing 20 percent solutions, a proportioning device (see hose stations), and suitable transfer means between each. Where usage rates are practical and tank truck deliveries are available, bulk tank storage may be the most economical method. The 40 percent concentration, used for the design delivery quantity should ensure that the concentrate remains pumpable without heating under possible ambient conditions. Provide spill prevention provisions around the bulk storage area. If the bulk storage tank is underground, ensure that the pump design includes a provision for pump priming.

a) If bulk tank storage is inappropriate, provisions should be made for 204 kg bulk 208 L drum storage and handling.

b) A solution tank should be provided in the utilities building for mixing the concentrate with water to make 100 percent solution (20 percent active surfactant, 80 percent inert). The tank should be sized to hold 120 percent of the maximum daily 100 percent AFFF usage. Supporting equipment should facilitate manual batch mixing. Each day the design amount of concentrate should be pumped into the solution tank from the bulk tank or from 208 L drums after which the calculated amount of water should be added.

c) The solution tank should have, but not be limited to, a graduated sight glass, a gage port, inlets and outlets, high level alarm, low level pump shutoff, drain, and a vent. Tank inlets should extend to the bottom of the tank and have expansion nozzles to reduce foaming. Aspects of the design

should consider the fluid's propensity to foam and the fluid's viscosity. Refer to Appendix A, Figures A-17 and A-18 for the AFFF viscosity characteristics curves.

d) Carbon steel cannot be used with the AFFF surrogate because the chemical picks up iron molecules. Tanks, pumps, piping, and appurtenances should not be carbon steel, irrespective of the solution concentration of the chemical. Copper piping or 316L stainless steel is an acceptable piping material.

e) From the solution tank the foam concentrate should be pumped in underground pipes to the hose station day tank. The flow rate should allow the day tank(s) to be filled in approximately 15 minutes. The concentrate distribution pump should be controlled by start-stop push-button stations at each hose station. The solution tank should include provisions for filling 19 L cans to be used with the portable foam proportioner.

f) The device sensors can distinguish between 3 percent AFFF and pure water. However, instructors feel that a 6 percent solution is more realistic in appearance. The proportioner is field adjustable. A 6 percent solution should be used for design purposes unless indicated otherwise. The 19F4 trainer uses 3 percent solution.

g) The 21C12A trainer requires a AFFF mixed solution for extinguishers of 59 ml. of 40 percent concentrate in 9 L of water.

4.2.3 Portable AFFF Fire Extinguishers. Portable AFFF fire extinguishers are only required on submarines, therefore, only used in the 21C12 and 21C12A trainers. These extinguishers are stainless steel cylinders that store 9 L of a premixed solution of AFFF concentrate and water. Cylinders are pressurized with air to 689 kPa at 21 degrees C. The AFFF is discharged from the bottom of the cylinder through the siphon tube, extinguisher valve, and discharge hose to the nozzle. The AFFF fire extinguisher weighs approximately 12 kg when fully charged and has a 55- to 65-second continuous discharge time. The AFFF

solution undergoes an expansion of 6.5 to 1 when passing through the nozzle, which produces around 61 L of expanded AFFF/water solution (foam) after discharge.

4.3 Potassium Bicarbonate. Potassium bicarbonate, PKP, is a dry chemical extinguishing agent. PKP has two main undesirable characteristics for use in fire training. It is extremely diffusive, that is it spreads in all directions like smoke and remains airborne, and it is corrosive to metal and painted surfaces.

a) Substitute. A substitute was identified as grade No. 2 sodium bicarbonate powder with an apparent density of approximately one g/cm^3. Sodium bicarbonate is similar to PKP in all respects. However, No. 2 grade powder is composed of large particles, i.e., 90 percent of the particles are larger than 44 microns whereas 90 percent of PKP particles are smaller than 44 microns. PKP has an apparent density of approximately 2 g/cm^3. Larger particles make sodium bicarbonate less diffusive. The substitute powder is coated with silicon and therefore not soluble in water. The silicon coating should breakdown in time and then the sodium bicarbonate should dissolve in the water. Sodium bicarbonate powder's chemical composition is:

COMPONENTS	WEIGHT/PERCENT
Sodium bicarbonate, No. 2 grade	93.4
Attaclay	4.0
Mica	2.0
Silicone fluid	0.6
	100.0

b) Sodium bicarbonate is available in a variety of dry containers. It should be delivered and stored in bulk quantities. Storage should be kept dry.

c) Sodium bicarbonate should then be transferred to the refill station where the proper weight is poured through a funnel into portable extinguishers. The same scales can be used for PKP and CO_2 refill. PKP cylinders come in 8 and 12 kg sizes

and are provided in accordance with MIL-E-24091, Extinguisher, Fire, Portable, Potassium Bicarbonate, Dry Chemical, Cartridge-Operated Type.

4.4 Carbon Dioxide (CO_2). CO_2 should be used for fire training in the form of portable 7 kg extinguishers. The portable 7 kg extinguishers should be in accordance with MIL-E-24269, Extinguisher, Fire, Carbon Dioxide, 15 Pound, Portable, Permanent Shutoff, Navy Shipboard Use. There are no fixed pipe CO_2 systems for training purposes. Extinguishers should be purchased as collateral equipment and stored in repair lockers for use by the trainees. As an exception to collateral equipment requirements, portable CO_2 extinguishers should be provided with the training facility for the electrical room and instructor's station.

a) The 19F5, 19F5A, 21C12, and 21C12A trainers should use a low pressure refrigerated, CO_2 bulk storage tank system. For other trainers, consideration should be given to using either a low pressure refrigerated, CO_2 bulk storage tank system or high pressure 23 kg storage cylinders for recharging the extinguishers.

b) The high pressure recharging system should consist of 23 kg cylinders which are 1295 mm long by 215.9 mm in diameter and weigh 72 kg when full. Cylinders contain CO_2 gas at 5857 kPa at 21.1 degrees C. The recharging station should consist of the following collateral equipment: tilt racks, a scale, 220 V, single-phase motor and pump, fill hose, and valves. For details, refer to Appendix A, Figure A-11. The 23 kg cylinders should be stored in a bulk storage area located near the recharging area. The bulk storage area should be suitable for storing 1 month's supply of cylinders plus 2 weeks of empty cylinders. Sufficient access should be provided in the bulk storage area for moving the cylinders.

c) The low pressure recharging system should consist of a low pressure refrigerated CO_2 storage tank, fixed supply and

return piping system, and a manual extinguisher fill pump capable of receiving CO_2 at 2067 kPa, and an oxygen monitor and alarm system.

d) The system should be in accordance with NFPA 12, Carbon Dioxide Extinguishing Systems. The storage tank should contain CO_2 at -17.7 degrees C and 2067 kPa and should be sized to provide a minimum of 30 days of CO_2. For details, refer to Appendix I, Figures I-1 through I-7.

Caution: Extra care should be taken when recharging the extinguisher with low pressure liquid CO_2. Too much liquid CO_2 in an extinguisher will cause an explosion when the CO_2 changes state from a liquid to a gas due to expansion as the liquid heats up from -17.7 degrees C ambient temperature.

e) CO_2 is also used in cartridges for propelling PKP from portable extinguishers. These cartridges are not refillable.

f) Due to the potential for CO_2 gas leakage, provide an oxygen (O_2) monitoring and alarm system in enclosed spaces containing the CO_2 recharging system. The O_2 monitoring and alarm system should tie into the main propane alarm control panel so as to provide alarm and annunciation to the 24-hour duty desk, instructor's station, and to the DTC. Local alarm and flashing warning sign should also be provided. The warning sign should state "DANGER, CO_2 CONDITION."

g) At the closest outside entrance to the CO_2 recharging system, provide the following in weatherproof lockers with the appropriate labels:

(1) A portable CO_2 and O_2 detection kits.

(2) An emergency air breathing "SCOTPAK."

h) Doors for the spaces containing the CO_2 recharging system should be provided with panic hardware.

4.5 Halon. Halon is an invisible gas which is used in the Navy community. Where it is called for in the training structure it should be simulated and necessary equipment should be provided by the device contractor. No facility services are required. The Halon simulator should look like a shipboard installation but there should be no pressurized containers inside the structure. Halon is now limited by the Navy due to possible ozone depletion.

4.6 Aqueous Potassium Carbonate (APC). APC is a type of extinguishment that is used as a fixed range guard system on kitchen exhaust hoods. It should be simulated on the deep fat fryer fireplace by the use of a water spray.

4.7 Nozzles. Hose end nozzles used for firefighting training should be provided by the user as collateral equipment. The preferred water fog nozzle is NAVSHIPS Dwg. 805-860089.

4.8 Oxygen Breathing Apparatus (OBA). OBA are used by the Navy to protect firefighters from the toxicity of the products of combustion. They contain a replaceable cartridge. Oxygen is produced by chemical reaction in the cartridge. The OBA's should be stored in repair lockers associated with each structure. Chemicals in the spent cartridge should be completely finished producing oxygen prior to disposal. This is done by letting them set in the air a minimum of one hour, then recapping them and wrapping them in double poly bags. Wrapped cartridges are then stored in drums to be hauled away as hazardous waste.

4.9 Hose Stations. In the 80 mm service pipe supplying each hose station, provide a shutoff valve so the instructor can disable the station. The valve should be out of sight of the trainee where possible but in a location convenient to the instructor. The instructor's shutoff valve should be a 80 mm commercial ball valve with a locking handle.

a) Consult the using activity and when requested, provide a hose drying rack. Where the climate allows, the hose drying rack should be out in the open for maximum use of natural air movement.

b) The word "faked" in faked hose station refers to the method used to store the hose. See Appendix A, Figure A-4 for an example of a faked hose.

c) The following types of hose stations have been identified for the 19F series trainers.

4.9.1 Hose Station 1 (HS1). A 40 mm hose station, supplied with water. Refer to Appendix A, Figure A-4.

a) A 40 mm hose globe valve with one end flanged and one end threaded, NAVSHIPS Dwg. 803-1385712.

b) A marine strainer and valve with connection coupling on one end and threaded on the other end is no longer required.

c) A 15 240 mm steel hose rack with strap, NAVSHIPS Dwg. 805-860089.

d) A 40 mm hose, 15 240 mm long, Fed. Spec. ZZ-H-451, Hose, Fire, Woven-Jacketed Rubber or Latex or Rubber-Coated Fabric-Lined With Couplings.

e) A 1219 mm applicator.

f) Spanner wrench.

4.9.2 Hose Station 2 (HS2). A 65 mm hose station, supplied with water. Refer to Appendix A, Figure A-5.

a) A 65 mm hose angle valve with one end flanged and the other end threaded, NAVSHIPS Dwg. 803-1385712.

b) A marine strainer and valve with connection coupling on one end and a threaded connection on the other end is no longer required.

c) A 65 mm by (2) 40 mm wye gate.

d) Two 30 480 mm steel hose racks with strap, NAVSHIPS Dwg. 805-860089.

e) Four 40 mm hose, 12 240 mm long Fed. Spec. ZZ-H-451.

f) Two 1219 mm applicators.

g) Spanner wrench.

4.9.3 Foam Station (FS). Foam hose station, supplied with water. Refer to foam station diagram Appendix A, Figure A-21.

a) Single agent hose reel

b) A 40 mm hose, 38 100 mm long, MIL-H-24580, Hose Assemblies, Synthetic Rubber, Noncollapsible, Firefighting

c) Foam nozzle

d) Concentrate tank

(1) 19F1A - 303 L

(2) 19F3-B1 - 303 L

(3) 19F3-B3, 19F3-B4, and 19F5 - 379 L

e) Electric foam proportioning pump (Blackmer pump Model BXL - 1-1/4, Manufacturer Dwg. E-4638)

f) Controls as found on damage control deck

The 100 percent AFFF concentrate line should have a valved bypass before it enters the concentrate tank arranged so 19 L AFFF cans can be filled at that location.

4.9.4 Foam Reel (FR). Foam reel station, supplied with foam. Refer to Appendix A, Figure A-21.

a) Single agent hose reel, Appendix A, Figure A-6.

b) A 40 mm hose, 38 100 mm long, MIL-H-24580

c) Foam nozzle

d) Manual control valve

e) Ball valve

f) Controls

The foam reel is supplied with 6 percent foam from the nearest FS type hose station.

4.9.5 Stand Pipe (SP). A 65 mm stand pipe, supplied with water.

a) A 65 mm hose angle valve with one end flanged and the other end threaded, NAVSHIPS Dwg. 803-1385712.

b) A marine strainer and valve with connection coupling on one end and a threaded connection on the other end is no longer required.

c) A 65 mm by (2) 40 mm wye gate.

4.9.6 Submarine Hose Station 1 (SHS1). Hose station is supplied with water and is wall mounted.

a) A 40 mm angle globe valve with one end flanged and the other end threaded, NAVSHIPS Dwg. 803-1385712. The valve should be located 457 mm above the floor next to the hose station. The valve should be perpendicular to the wall and should be served by piping routed in or through the wall.

b) A 40 mm hose, 7620 mm long, MIL-H-24580.

c) Wall mounted fire hose locker in accordance with Appendix G, Figure G-8. The hose is rolled up and stored in the locker.

d) No strainer, wye gate, or applicator is required.

4.9.7 Submarine Hose Station 2 (SHS2). Hose station is supplied with water and is floor mounted.

a) A 40 mm angle globe valve. Refer to SHS1 above.

b) A 40 mm hose, 15 240 mm long, MIL-H-24606, Hose Assemblies, Chlorosulfonated Polyethylene Impregnated, Double Synthetic Jacket, With Couplings, Firefighting and Other Water Service

c) Floor mounted hose cabinet in accordance with Appendix G, Figure G-9. The hose is rolled up and stored in the locker.

4.9.8 Submarine Hose Station 3 (SHS3). Hose station is supplied with water and is recessed into the wall. Hose station should consist of the following as shown on NAVSEA Dwg. 608-4674414: (SHS3 is part of the combined submarine hose station.)

a) A 40 mm hose, 15 240 mm long, MIL-H-24606

b) Fire hose rack per NAVSEA Dwg. 608-4674414

c) One applicator per BUSHIPS Dwg. 810-1385834

d) Two spanner wretches per NAVSHIPS Dwg. 810-4444647

Spanner wrenches and the applicator should be clamped in the recessed area of the station. Clamps should be per NAVSEA Dwg. 608-4674414. SHS3 should be recessed into a space of the wall with dimensions of 1270 mm height from the floor to top of the opening by 762 mm wide by 203 mm deep.

4.9.9 Combined Submarine Hose Station (CSHS). Hose station is supplied with water and consists of SHS3 recessed into the wall with SHS1 on a metal plate mounted to cover SHS3. The metal plate should be removable and should be provided over SHS3 to hide SHS3. The plate should be designed to be removed by one or two men. Clips or other methods of attachment should be provided for attaching the plate over SHS3. SHS1 should be

permanently attached to the metal plate. A 40 mm angle globe valve normally furnished with SHS1 should be provided next to the combined hose station.

4.9.10 PKP Fire Extinguisher (PFE). A 12 kg portable PFE should be provided with single AFFF foam reels, as shown on appendixes floor plans, and should be in accordance with MIL-E-24091.

4.9.11 Twin Agent Reels (TAR). The TAR and system have been replaced by a single AFFF FR and a 12 kg portable PFE which should provide a similar function to the TAR system.

Section 5: PROTECTION OF THE ENVIRONMENT

5.1 Permits

a) OPNAVINST 5090.1, Environmental and Natural Resources Protection Manual, Chapter 6, Air Pollution Abatement states the firefighting schools should comply with state open burning regulations or have prior Chief of Naval Operations (CNO) approval for a delayed compliance request.

b) Discharge permits for air and water should be negotiated with the state for each site. This should be done early in the project so the scope of monitoring and treatment can be determined. It is important to have discharge information adequately prepared and use a positive approach. Water usage permits may also be required depending on locality, municipal, or State regulations. For typical air emissions, see Table 15; for wastewater characteristics, see Table 16.

5.2 Air. The 19F series trainers use propane for fuel, dramatically reducing criteria (PM10/TSP, VOCs, CO, SOX, etc.) and other hazardous air pollutants. However, benzene as a combustion by-product is still emitted in sufficient concentrations to require emission control devices under some circumstances. In addition, the surrogate PKP and artificial smoke training agents generate regulated emissions as discussed below. Continuous monitoring of the air effluent may be required to determine code compliance. This should be negotiated with local air pollution control authorities.

5.2.1 PKP. One of the parameters used to choose the PKP surrogate was particle size. Grade No. 2 sodium bicarbonate was chosen. Ninety percent of its particles are larger than 44 microns with an average particle size of 100 microns. Ninety percent of normal PKP particles are smaller than 44 microns with an average particle size of 20 microns. For comparison, a human hair is approximately 100 microns in diameter. The large particle PKP substitute is less diffusive than PKP with most particulate falling out before the effluent leaves the training compartment. For maximum particulate emission rates see Appendix A, Figure A-10.

Table 15
Typical Air Emissions

EMISSION	MAXIMUM EMISSION RATE	TYPICAL EFFLUENT
CO	(1)	negligible
VOCs	(1)	negligible
SOX	(1)	none
NOX	(1)	negligible
TSP/PM1O	(1)	see Figure A-10, Appendix A
Lead	(1)	none
Ozone	(1)	negligible
Benzene	(2) 0.325 mg/cu. m (0.1 mg/kg)	(3)
Tear Gas	(2) 0.3 mg/cu. m (0.05 mg/kg)	19.5 gm (4)
Triphenyl Phosphate	(2) 3 mg/cu. m	(5)

Notes: (1) Emission rates of criteria pollutants vary by locality, primarily due to each locality's compliance with National Ambient Air Quality Standards established by the Clean Air Act Amendments of 1990.

(2) Values listed are threshold limit values (TLVs) as established by the National Institute for Occupational Safety and Health (NIOSH), American Conference of Governmental Industrial Hygienists (ACGIH), or Occupational Safety and Health Administration (OSHA).

(3) Source emissions testing/monitoring for the 21C12 trainer at STF Norfolk were conducted in the Fall of 1993. This data will be promulgated as an amendment to this handbook as soon as data is available. Such information may be useful for local EFD's in projecting air permit application data and generating cost certification/concept design cost estimates for necessary control devices required by local authorities for other types of trainer devices.

(4) Tear gas chambers are normally only included in 19F5 recruit training facilities.

(5) TPP emission data is largely dependent on local training requirements for each facility.

Table 16
Wastewater Characteristics

Trainer Structure	19F1A/ 19F1B	19F4/ 19F4A	19F5/ 19F5A	19F3A/ 19F3C	21C12/ 21C12A	19F3/ 19F3B	Composite
Date of Test	11/14/89	11/14/89	11/14/89	11/14/89	11/14/89	11/14/89	7/19/89
Test No.	B8917164	B8917162	B8917163	B8917167	B8917165	B8917166	B898356
BOD, mg/1	23	10	219	62	44	<127	104
COD, mg/1	120000	33000	3900	780	290	8300	4800
TSS, mg/1	77	5	700	250	5146	58	57
TDS, mg/1	69088	15810	9508	2625	132461	4003	2330
MBAS, mg/1	3000	6000	400	100	100	N/A	300
Oil & Grease, mg/1	24	30	19	15	6	N/A	14
PH	not tested	not tested	not tested	not tested	not tested	not tested	not tested
PRIORITY POLLUTANTS (TEST RESULTS)							
VOLATILES, ug/1							
Acrolein	not tested	not tested	not tested	not tested	not tested	not tested	not tested
Acrylonitrile	not tested	not tested	not tested	not tested	not tested	not tested	not tested
Benzene	<0.10	<1	<0.10	<0.10	<0.10	<10	<0.10
Bis (chloromethyl) ether	not tested	not tested	not tested	not tested	not tested	not tested	not tested
Bromoform (Tribromomethane)	<0.10	<1	<0.10	<0.10	<0.10	<0.10	<0.10
Carbon tetrachloride	<0.10	<1	<0.10	<0.10	<0.10	<0.10	<0.10
Chlorobenzene	<0.10	<1	<0.10	<0.10	<0.10	<0.10	<0.10
Chlorodibromomethane (Dibromochloromethane)	<0.10	<1	<0.10	<0.10	<0.10	<0.10	<0.10
Chloroethane	<0.10	<1	<0.10	<0.10	<0.10	<0.10	<0.10
2-Chloroethylvinyl ether	<0.10	<1	<0.10	<0.10	<0.10	<0.10	<0.10

Table 16 (Continued)
Wastewater Characteristics

Trainer Structure	19F1A/ 19F1B	19F4/ 19F4A	19F5/ 19F5A	19F3A/ 19F3C	21C12/ 21C12A	19F3/ 19F3B	Composite
Date of Test	11/14/89	11/14/89	11/14/89	11/14/89	11/14/89	11/14/89	7/19/89
Test No.	B8917164	B8917162	B8917163	B8917167	B8917165	B8917166	B898356
Chloroform (Trichloromethane)	<0.10	<1	<0.10	<0.10	<0.10	<0.10	<0.10
Dichlorobromomethane (Bromodichloromethane)	<0.10	<1	<0.10	<0.10	<0.10	<0.10	<0.10
Dichlorodifluoromethane (Fluorocarbon-12) (Diflurodichloromethane)	not tested	not tested	not tested	not tested	not tested	not tested	not tested
1,1-Dichloroethane	<0.10	<1	<0.10	<0.10	<0.10	<0.10	<0.10
1,2-Dichloroethane	<0.10	<1	<0.10	<0.10	<0.10	<0.10	<0.10
1,1-Dichloroethyene (1,1-Dichloroethene)	<0.10	<1	<0.10	<0.10	<0.10	<0.10	<0.10
1,2-Dichloropropane	<0.10	<1	<0.10	<0.10	<0.10	<0.10	<0.10
1,3-Dichloropropylene (cis-1,3- Dichloropropene)	<0.10	<1	<0.10	<0.10	<0.10	<0.10	<0.10
(trans-1,3- dichloropropene)	<1	<0.10	<0.10	<0.10	<0.10	<0.10	
Ethylbenzene	<0.10	<1	<0.10	<0.10	<0.10	<0.10	<0.10
Methyl chloride (Chloromethane)	<0.10	<1	<0.10	<0.10	<0.10	<0.10	<0.10
Methylene chloride	<0.10	<1	<0.10	<0.10	<0.10	<0.10	<0.10
Milligrams per liter							
Micrograms per liter (Dichloromethane)		<1					
1,1,2,2- Tetrachloroethane	<0.10	<1	<0.10	<0.10	<0.10	<0.10	<0.10
Tetrachloroethylene (Tetrachloroethene)							

Table 16 (Continued)
Wastewater Characteristics

Trainer Structure	19F1A/ 19F1B	19F4/ 19F4A	19F5/ 19F5A	19F3A/ 19F3C	21C12/ 21C12A	19F3/ 19F3B	Composite
Date of Test	11/14/89	11/14/89	11/14/89	11/14/89	11/14/89	11/14/89	7/19/89
Test No.	B8917164	B8917162	B8917163	B8917167	B8917165	B8917166	B898356
Toluene	<0.10	<1	<0.10	<0.10	<0.10	<0.10	<0.10
1,2 trans-dichloro-ethylene (trans 1,2-dichloroethene)	<0.10	<1	<0.10	<0.10	<0.10	<0.10	<0.10
1,1,1-Trichloroethane	<0.10	<1	<0.10	<0.10	<0.10	<0.10	<0.10
1,1,2-Trichloroethane	<0.10	<1	<0.10	<0.10	<0.10	<0.10	<0.10
Trichloroethylene	<0.10	<1	<0.10	<0.10	<0.10	<0.10	<0.10
Trichlorofluoromethane	<0.10	<1	<0.10	<0.10	<0.10	<0.10	<0.10
Vinyl chloride (Chloroethylene)	<0.10	<1	<0.10	<0.10	<0.10	<0.10	<0.10
Xylenes	not tested	not tested	not tested	not tested	not tested	not tested	not tested
ACIDS, ug/1							
2-Chlorophenol	*	<1	<1	<1	<1	<1	<10
2,4-Dichlorophenol	*	<1	<1	<1	<1	<1	<10
2.,4-Dimethylphenol	*	<1	<1	<1	<1	<1	<10
4,6-Dinitro-o-cresol (4,6-Dinitro-othro-cresol) (4,6-Dinitro-2-methylphenol)	*	<2	<2	<2	<2	<2	<10
2,4-Dinitropheno1	*	<4	<4	<4	<4	<4	<10
2-Nitrophenol	*	<2	<2	<2	<2	<2	<10
4-Nitrophenol	*	<2	<2	<2	<2	<2	<10
P-chloro-m-cresol (Para-chloro-meta-cresol) (4-chloro-3-methylphenol)	*	<1	<1	<1	<1	<1	<10
Pentachlorophenol	*	<2	<2	<2	<2	<2	<10

Table 16 (Continued)
Wastewater Characteristics

Trainer Structure	19F1A/ 19F1B	19F4/ 19F4A	19F5/ 19F5A	19F3A/ 19F3C	21C12/ 21C12A	19F3/ 19F3B	Composite
Date of Test	11/14/89	11/14/89	11/14/89	11/14/89	11/14/89	11/14/89	7/19/89
Test No.	B8917164	B8917162	B8917163	B8917167	B8917165	B8917166	B898356
Phenol	*	<1	<1	<1	<1	<1	<10
2,4,6-Trichlorophenol	*	<2	<2	<2	<2	<2	<10
BASE/NEUTRALS, ug/l							
Acenapthene	*	<1	<1	<1	<1	<1	<10
Acenapthylene	*	<1	<1	<1	<1	<1	<10
Anthracene	*	<1	<1	<1	<1	<1	<10
Benzidine	*	<10	<10	<10	<10	<10	<50
Benzo(a)anthracene (1,2-benzanthracene)	*	<1	<1	<1	<1	<1	<10
Benzo(a)pyrene (3,4-benzopyrene)	*	<1	<1	<1	<1	<1	<10
3,4-Benzofluoranthene (Benzo-(B) fluoranthene)	*	<1	<1	<1	<1	<1	<10
Bis (2-chloroethoxy) methane	*	<1	<1	<1	<1	<1	<10
Bis (2-chloroethyl) ether (Dichloroethyl ether)	*	<1	<1	<1	<1	<1	<10
Bis (2-chloroisopropyl) ether	*	<1	<1	<1	<1	<1	<10
Bis (2-ethylhexyl) phthalate	*	<1	<1	<1	<1	<1	<21
4-Bromphenyl phenyl ether	*	<1	<1	<1	<1	<1	<10
2-chloronaphthalene	*	not tested	not tested	not tested	not tested	not tested	<10
4-chlorophenyl phenyl ether	*	<1	<1	<1	<1	<1	<10
Chrysene	*	<1	<1	<1	<1	<1	<10
Dibenzo (a,h) anthracene	*	<1	<1	<1	<1	<1	<10

Table 16 (Continued)
Wastewater Characteristics

Trainer Structure	19F1A/ 19F1B	19F4/ 19F4A	19F5/ 19F5A	19F3A/ 19F3C	21C12/ 21C12A	19F3/ 19F3B	Composite
Date of Test	11/14/89	11/14/89	11/14/89	11/14/89	11/14/89	11/14/89	7/19/89
Test No.	B8917164	B8917162	B8917163	B8917167	B8917165	B8917166	B898356
(1,2,5,6-dibenzanthracene)							
1,2-Dichlorobenzene	<0.10	<1	<0.10	<0.10	<0.10	<0.10	<10
1,3-Dichlorobenzene	<0.10	<1	<0.10	<0.10	<0.10	<0.10	<10
1,4-Dichlorobenzene	<0.10	<1	<0.10	<0.10	<0.10	<0.10	<10
3,3-Dichlorobenzidine	*	<2	<1	<1	<2	<2	<20
Diethyl phthalate	*	<1	<1	<1	<1	<1	<10
Dimethyl phthalate	*	<1	<1	<1	<1	<1	<10
Di-n-butyl phthalate	*	<10	<10	<10	<10	<10	<50
2,4-Dintrotoluene	*	<1	<1	<1	<1	<1	<10
2,6-Dinitrotoluene	*	<1	<1	<1	<1	<1	<10
Di-n-octyl phthalate	*	<1	<1	<1	<1	<1	<10
1,2-Diphenylhydranzine	*	not tested	not tested	not tested	not tested	not tested	not tested
Fluoranthene	*	<1	<1	<1	<1	<1	<10
Fluorene	*	<1	<1	<1	<1	<1	<10
Hexachlorobenzene	*	<1	<1	<1	<1	<1	<10
Hexachlorobutadiene	*	<1	<1	<1	<1	<1	<10
Hexachlorocyclopentadiene	*	<1	<1	<1	<1	<1	<10
Hexachloroethane	*	<1	<1	<1	<1	<1	<10
Indeno (1,2,3-cd) pyrene	*	<1	<1	<1	<1	<1	<10
Isophrone	*	<1	<1	<1	<1	<1	<10
Napthalane	*	<1	<1	<1	<1	<1	<10
Nitrobenzene	*	<1	<1	<1	<1	<1	<21
N-nitrosodimethylamine (Dimethyl nitrosamine)	*	<1	<1	<1	<1	<1	<10
N-nitroso-di-n-propylamine	*	<1	<1	<1	<1	<1	<10
N-nitrosodiphenylamine	*	<1	<1	<1	<1	<1	<10

Table 16 (Continued)
Wastewater Characteristics

Trainer Structure	19F1A/ 19F1B	19F4/ 19F4A	19F5/ 19F5A	19F3A/ 19F3C	21C12/ 21C12A	19F3/ 19F3B	Composite
Date of Test	11/14/89	11/14/89	11/14/89	11/14/89	11/14/89	11/14/89	7/19/89
Test No.	B8917164	B8917162	B8917163	B8917167	B8917165	B8917166	B898356
Phenanthrene	*	<2	<1	<1	<2	<2	<20
Pyrene	*	<1	<1	<1	<1	<1	<10
1,2,4-Trichlorobenzene	*	<1	<1	<1	<1	<1	<10
PESTICIDES, ug/l							
Aldrin	*	not tested	<0.2	<0.1	0.07	<0.01	<0.03
Alpha-BHC	*	not tested	0.09	0.04	0.04	<0.07	<0.03
Beta-BHC	*	not tested	<1	<0.50	<0.10	<0.10	0.86
Gamma-BHC (Lindane)	*	not tested	0.15	0.06	0.06	0.08	not tested
Delta-BHC	*	not tested	<0.3	<0.7	0.07	<0.15	<0.04
Chlordane	*	not tested	<5	<2.5	<2.5	<2.5	not tested
4,4'DDT	*	not tested	<1	<0.50	<0.15	0.15	not tested
4,4'DDE	*	not tested	<0.3	<0.15	<2.5	<2.5	not tested
4,4'DDD	*	not tested	<0.6	<0.30	<0.30	<3	not tested
Dieldrin	*	not tested	<0.2	<0.10	<0.10	<0.10	not tested
a-endosulfan	*	not tested	<0.3	<0.15	<0.15	<0.15	not tested
b-endosulfan	*	not tested	<0.4	<0.12	<0.20	<0.20	not tested
Endosulfan sulfate	*	not tested	<0.8	<0.40	<0.40	<0.40	<0.11
Endrin	*	not tested	<0.8	<0.40	<0.40	<0.40	<0.11
Endrin aldehyde	*	not tested	<0.6	<0.13	<0.30	<0.30	<0.08
Heptachlor	*	not tested	<0.2	<0.10	<0.10	<0.16	<0.03
Heptachlor epoxide	*	not tested	<0.2	0.08	<0.10	<0.10	<0.03
PCB-1242 (AROCLOR 1242)	*	not tested	<25	<12.5	<12.5	<12.5	<3.5
PCB-1254 (AROCLOR 1254)	*	not tested	<25	<12.5	<12.5	<12.5	<3.5
PCB-1221 (AROCLOR 1221)	*	not tested	<50	<25	<25	<25	<3.5

Table 16 (Continued)
Wastewater Characteristics

Trainer Structure	19F1A/ 19F1B	19F4/ 19F4A	19F5/ 19F5A	19F3A/ 19F3C	21C12/ 21C12A	19F3/ 19F3B	Composite
Date of Test	11/14/89	11/14/89	11/14/89	11/14/89	11/14/89	11/14/89	7/19/89
Test No.	B8917164	B8917162	B8917163	B8917167	B8917165	B8917166	B898356
PCB-1232							
(AROCLOR 1232)	*	not tested	<50	<25	<25	<25	<3.5
PCB-1248							
(AROCLOR 1248)	*	not tested	<25	<12.5	<12.5	<12.5	not tested
PCB-1260							
(AROCLOR 1260)	*	not tested	<10	<5	<5	<5	<1.4
PCB-1016	*	not tested		not tested	not tested	not tested	<3.5
Toxaphene	*	not tested	<20	<10	<10	<10	not tested
METALS, mg/1							
(all reported as total metals)							
Antimony (Sb)	<0.1	not tested	not tested	<0.1	<0.1	<0.1	<0.2
Arsenic (AS)	0.01	not tested	not tested	0.003	0.018	0.002	0.001
Beryllium (Be)	<0.003	not tested	not tested	<0.003	<0.003	<0.003	<0.005
Cadmium (Cd)	<.003	not tested	not tested	<.003	0.004	<.003	<.0002
Chromium (Cr)	0.17	not tested	not tested	<.003	0.1	<0.03	<0.05
Copper (Cu)	0.09	not tested	not tested	0.06	0.15	0.05	0.01
Lead (Pb)	<0.03	not tested	not tested	<0.03	<0.03	0.03	<0.001
Mercury (Hg)	<0.002	not tested	not tested	<0.002	<0.002	<0.002	<0.002
Nickel (Ni)	<0.02	not tested	not tested	<0.02	0.05	<0.02	<0.04
Selenium (Se)	<0.02	not tested	not tested	0.004	0.002	<0.002	<0.002
Silver (Ag)	<0.01	not tested	not tested	0.02	<0.01	<0.01	<0.01
Thallium (T1)	not tested	not tested	not tested	not tested	not tested	not tested	<0.1
Zinc (Zn)	0.09	not tested	not tested	0.07	0.21	0.07	0.06

Table 16 (Continued)
Wastewater Characteristics

Trainer Structure	19F1A/ 19F1B	19F4/ 19F4A	19F5/ 19F5A	19F3A/ 19F3C	21C12/ 21C12A	19F3/ 19F3B	Composite
Date of Test	11/14/89	11/14/89	11/14/89	11/14/89	11/14/89	11/14/89	7/19/89
Test No.	B8917164	B8917162	B8917163	B8917167	B8917165	B8917166	B898356
Cyanide, mg/l	not tested	not tested	not tested	not tested	not tested	<0.01	<0.01
Phenol, mg/l	not tested	<1	<1	<1	<1	<0.01	<0.01
Asbestos, fibrous	not tested	not tested	not tested	not tested	not tested	not tested	not tested

*Upon extraction for Acids, Base Neutrals, and Pesticides, and sample solidified.

NOTES:

1. These tests were performed by LANTNAVFACENGCOM Code 1812. These bench tests were performed on mixed solutions containing the required constituents at concentrations given in this handbook.

2. The 19F3 test is the combination of the B1, B2, B3, and B4 trainers.

3. The composite test is for the combination of 19F1A, 19F3 (B1, B3, B4), and 19F4 trainers.

5.2.2 Artificial Smoke. Artificial smoke agent is butylated triphenyl phosphate ester hydraulic fluid which contains varied amounts of the toxic substance triphenyl phosphate (TPP). Several states regulate the emission of this substance as a hazardous air pollutant. Artificial smoke as generated is a hot air or aerosol mixture which produces a negligible residue.

Visible emission from a training structure consists of artificial smoke (a white colored hot air or aerosol mixture) and water vapor both of which evaporate to a colorless gas with no particulates. Where visible emission is not permissible, treatment should consist of allowing the effluent to evaporate prior to discharge.

5.2.3 Benzene. Although propane fuel eliminates most emissions of criteria pollutants, benzene is still emitted in trace amounts and concentrations. In some installations, additional stacks have been required by local air pollution authorities to lower ground level plume concentrations of benzene. Emissions testing of 21C12 facilities at STF Norfolk and 19F5 facilities at RTC San Diego were conducted in Fall of 1993. Test results will be published as an amendment to this handbook as soon as results are available.

5.3 Wastewater

5.3.1 General. The water effluent from training structures contains two major contaminants in varying degrees depending on the training being given. Sodium bicarbonate and excessive concentrations of biodegradable surfactant are the contaminants. Wastewater is channeled to a collection tank for pretreatment. Surface runoff from fire training facility pavement can go directly to the storm drain since firefighting agents used outside each structure are also collected and sent to pretreatment.

a) Wastewater effluent characteristics are as noted below in Table 16. These wastewater characteristics are based on actual bench tests performed by LANTNAVFACENGCOM. Limitations for each of these characteristics may vary on a local or state level. Typical wastewater surcharge limits are provided in Table 17. It should be the responsibility of the local EFD's to:

(1) Determine the required level of wastewater treatment.

(2) Determine applicable regulations necessary to obtain the wastewater permit.

(3) Determine the necessity of additional environmental studies of the projected wastewater (if required) to identify:

(a) BOD - biological oxygen demand

(b) COD - chemical oxygen demand

(c) pH

(d) TSS - total suspended solids

(e) TDS - total dissolved solids

(f) Priority pollutant scans

(g) EPA priority pollutant scans

b) The effluent is not toxic as the high COD could imply and is completely biodegradable when combined with acclimated bacteria. Surfactant quantities in excess of 200 mg/kg should require the addition of an anti-foaming agent to suppress foaming. A typical anti-foaming agent is Betz No. 300 defoamer.

c) Firefighting trainer wastewater should always require secondary treatment before being discharged to the environment because of high BOD and COD.

d) Provisions for onsite biological treatment should be provided where the receiving stream does not include secondary treatment. At those sites where Navy owned secondary treatment will be required, the design should consider the effect of precipitate on the treatment process. High surfactant effluent generates a precipitate so it may be desirable to reduce the precipitate in the biological section by flocculating and sedimentation prior to treatment.

e) Alternative AFFF surrogate agents may be available to reduce or eliminate local effluent discharge problems. Although discharge limits will vary at each trainer location, LANTNAVFACENGCOM Code 1811 has conducted a study of several agents to determine amounts of each which can be discharged as part of the effluent stream for the Fleet Training Center (FTC) Norfolk facilities. This information is available upon request from Mr. Ken Clark, Mr. Steve Azar, or Mr. Jim Bailey at (804) 322-4736 or DSN 262-4736.

f) Modifications to the pretreatment process described below may be required to comply with local discharge limitations. If pretreatment is not required by local authorities, it may be deleted.

Table 17
Wastewater Surcharge Limits

	TYPICAL LIMITS (maximum) (Based on domestic sewage)
BOD - Biological Oxygen Demand	230 mg/kg*
COD - Chemical Oxygen Demand	550 - 700 mg/kg*
pH - measure of acidity or alkalinity of a solution	6.5 - 8.5*
Oil and Grease	100 mg/kg
TSS - Total Suspended Solids (consists mostly of siliconized sodium bicarbonate particles)	250 mg/kg*
MBAS - measure of surfactant quantity	200 mg/kg

*Note: These are typical surcharge limits, not compliance limits.

5.3.2 Separation Chamber. The large particle siliconized sodium bicarbonate is partially soluble in water; however, its density is so close to that of water it should stay in suspension with the slightest agitation. Grit and sludge from other sources should accumulate in tanks associated with the wastewater stream and a method for its removal should be included in the tank design. Training wastewater from the fire training structure should be piped to a separation chamber to remove the propane. For details refer to par. 3.2.9 and Appendix A, Figure A-15.

5.3.3 Pretreatment. Fire training wastewater should be collected in an equalization tank sized to hold 125 percent of the largest one day's effluent. This should allow various firefighting agent concentrations to mix and dilute each other. It should also allow a homogeneous batch of wastewater to be monitored and then discharged to the sanitary sewer system at a controlled rate. There should be two equal size equalization tanks so that one can be discharging while the second is receiving. During maintenance periods the active tank can discharge at night. Each of the equalization tanks should have draft marks in increments sufficient for operators to estimate tank contents to the nearest 1900 L.

a) Piping and valves associated with equalization tanks should be designed for flexibility of use. Tanks should overflow to each other. Each tank should have provisions for mechanical agitation and sludge removal. The agitation should be a high volume low head pumped recirculation system with a 90-degree elbow and length of pipe at the discharge so the operator can manually adjust between submerged or open discharge. The open discharge would afford some aeration. Sludge handling provisions may consist of a sump or trough to which the grit can be hosed for removal by shovel and bucket. The sump should have a drain piped directly to the exterior of the tank for future addition of a pumped system if it becomes practical. Provide permanent personnel access to the bottom of tanks and a standpipe, SP, so tanks can be hosed down with a 40 mm fire hose.

b) Consideration should be given to the option of using a covered reservoir. The trade-offs are the cost of disposing of collected precipitation and freeze protection.

c) A chemical addition system should be provided for addition of acid, caustic, and defoaming agent. These three chemicals should be separately pumped at an adjustable rate to either equalization tank. The injection rate should be determined manually. Prior to discharging the wastewater to a secondary treatment plant, the operator should determine the pH of the effluent and make adjustments as necessary. Automatic pH adjustment with manual override can also be used. Provide a separate containment for each of the three chemicals used for the pretreatment. The containment basin should be designed to keep chemicals from mixing and to control chemicals in the event of spillage. A drain should not be provided. The containment should be designed to hold 125 percent of the amount of chemical drum storage intended for the area. Provide local exhaust in the chemical containment area. The exhaust system should manually operate from the local area.

d) When the pH is adjusted, the wastewater is ready for discharge. If monitoring is required by local authorities, it should be done at this time. A daily log of sampling data and chemical additions should be maintained by the user. Discharge to the sewer system should be controllable and verifiable because the rate should be used for billing purposes. The preferred system is dual sump pumps designed to evacuate the tank in 8 to 10 hours.

e) Local municipal treatment plants will periodically want a chemical analysis of the effluent being discharged to it. The reporting period may be short at first but then lengthened as confidence in the pretreatment process is gained. A sampling should best be done by a contract laboratory since its purpose is to determine permit compliance and its final frequency should not justify funding "in-house" capability. An automatic sample taking machine should be provided at fire training sites to facilitate the sample taking process. The controls for sump and recirculation pumps should include level controls, lead-log capability, alarm conditions for high-high and pump failure. Alarm conditions should be sent to the central annunciator panel in the utility building and to the 24-hour duty desk.

f) The inlet to the discharge and recirculation pumps should be provided with readily cleanable strainer to catch leaves and frogs, etc., which have been a problem in the past.

g) Pumps which take suction from the equalization tank should be protected by a low level shutoff switch.

5.3.4 Recovery. Wastewater recovery normally cost more than purchase, treatment, and disposal of potable water. In some instances, however, water use may be restricted and the more expensive route will be necessary. Recycled water should not cause a health hazard and should be compatible with device sensors. To avoid a health hazard, organic materials added during firefighting should be removed and the water should then be made clear since the device sensors use opacity to differentiate between foam and water. A carbon absorption procedure would be required to remove the organic material followed by a reverse osmosis system to remove the remaining dissolved solids and clear up the water. Since there are chemical compounds which are not removed by the above processes, the addition of new water and blow down would still be required. If recycling water is a serious consideration, more study would be required by the cognizant EFD to derive an acceptable system.

a) Wastewater associated with firefighting structures have low suspended solids, high dissolved solids (DS), high BOD, high COD, high pH, and high total toxic organics (TTO) levels. Recycling will arithmetically escalate the untreated portions of the wastewater (DS, BOD, COD, pH, and TTO), after each training scenario, to such high levels that device sensors and training personnel's health could be effected. Also, high levels of TDS, BOD, COD, pH, and TTS may prevent direct discharge into a sanitary sewer. The recycling system should consider each of the portions. The device sensor water requirements are given in the chart below:

pH Range	7.5 (max) - 6.5 (max)
Particle Size	40 microns
Color	None
Refoaming	Should not foam when sprayed
Safety	Not harmful to personnel

b) Recycling of water does not effect the storage requirement for potable water. The EFD environmental quality division should determine the required wastewater treatment, applicable regulations necessary to obtain the wastewater permit, and the necessity of required environmental studies of

the projected wastewater to identify: BOD, COD, pH, TSS, TDS, priority pollutant scans, Environmental Protection Agency (EPA) priority pollutant scans as required; water reclaim.

APPENDIX A
GENERAL

19F1A, 19F3, 19F3A, 19F1B, 19F3B, and 19F3C Bilge Fireplace Structure	A-1A
19F5, 19F5A Bilge Fireplace	A-1B
19F1A, 19F1B, 19F3, 19F3A, 19F3C Oil Spray/Bilge Fireplace	A-1C
Typical Deep Fat Fryer Fireplace	A-2
Typical Mattress/Locker Fireplace	A-3
Hose Station Detail HS1 - 40 mm	A-4
HS2 - 65 mm Hose Station Detail	A-5
FR - AFFF Hose Reel Detail	A-6
Quick Acting Watertight Door	A-7
Ellison Type Door	A-8
Fireplace Support	A-9
Particulate Compliance	A-10
Recharging Tilt Rack and Fill Equipment	A-11
Watertight Hatch for Emergency Escape Trunk	A-12
Wild Hose Demonstration Facility	A-13A
Wild Hose Post Detail	A-13B
Portable Pump P-250 Demonstration Facility	A-14
Separation Chamber, 21C12 and 19F Series Devices	A-15
Calsoft L-40 Viscosity Characteristic Curve	A-16
Calsoft L-40/Water Viscosity Characteristic Curve	A-17
Two Position Control Interface	A-18
Floating Point Control Interface	A-19
Exhaust Fan/Crawl Space Power Controls and Interlock	A-20A-D
AFFF Station	A-21A-J
Luminaire, Types 1 and 2	A-22

APPENDIX A (Continued)

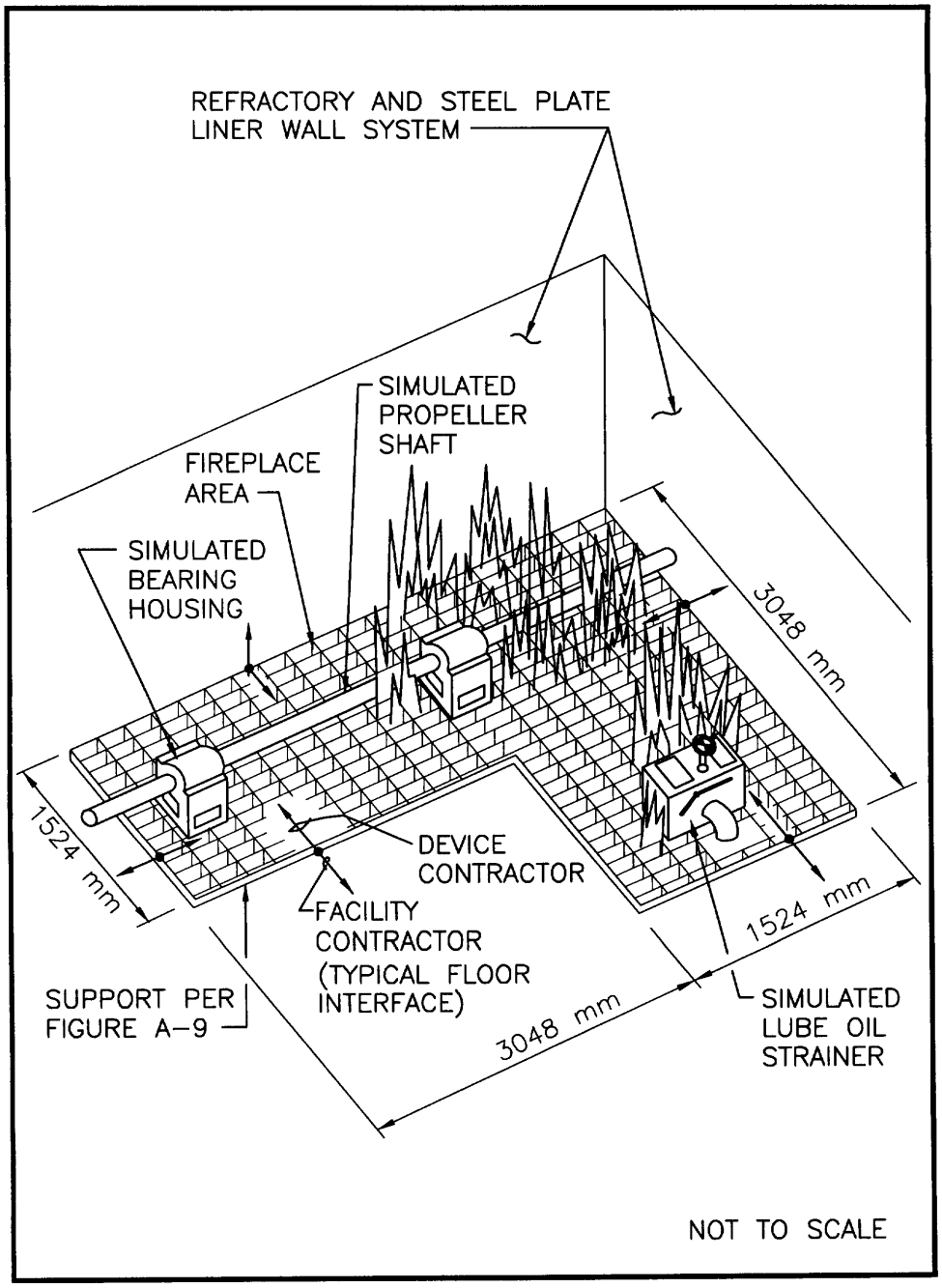

Figure A-1A

19F1A, 19F3, 19F3A, 19F1B, 19F3B, 19F3C
BILGE FIREPLACE STRUCTURE

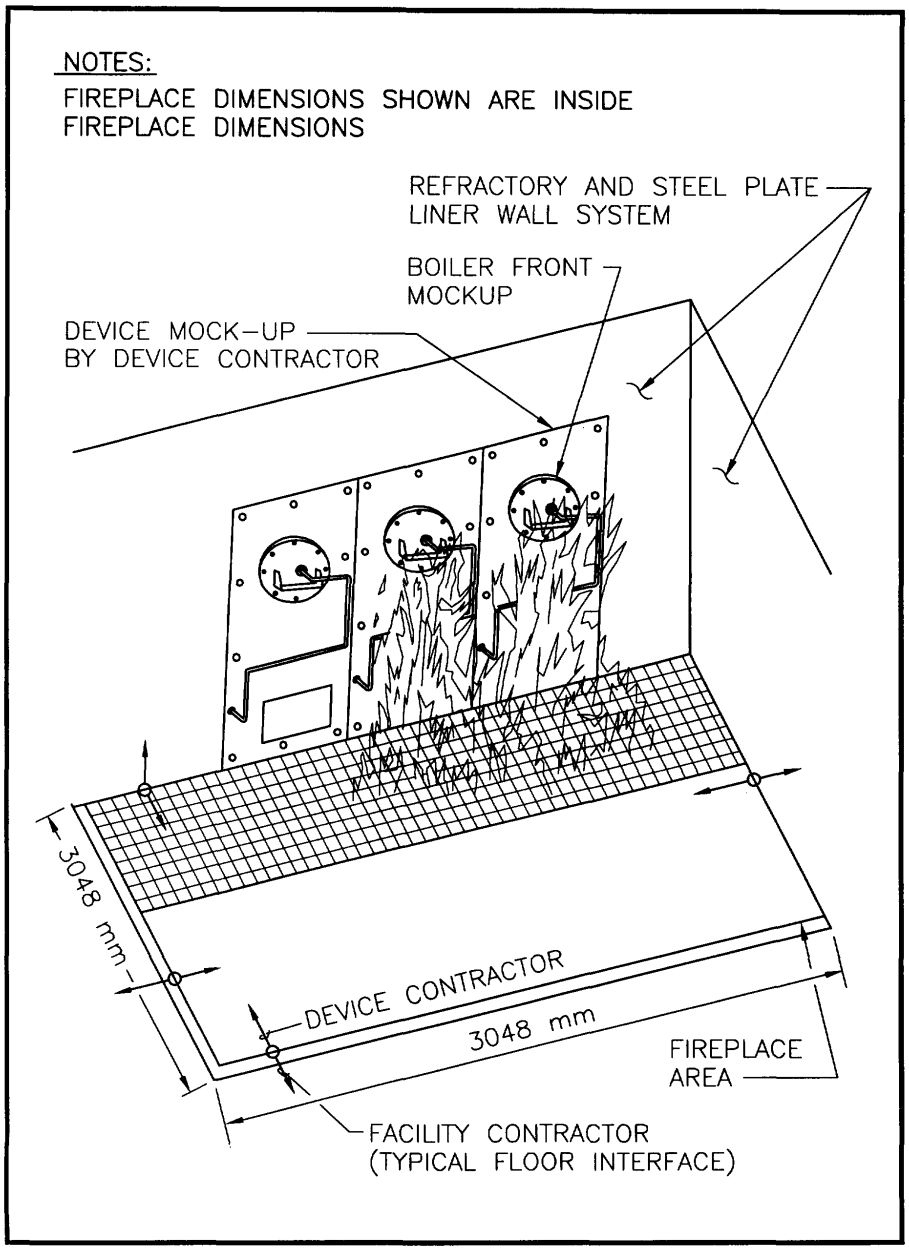

Figure A-1B

19F5, 19F5A Bilge Fireplace

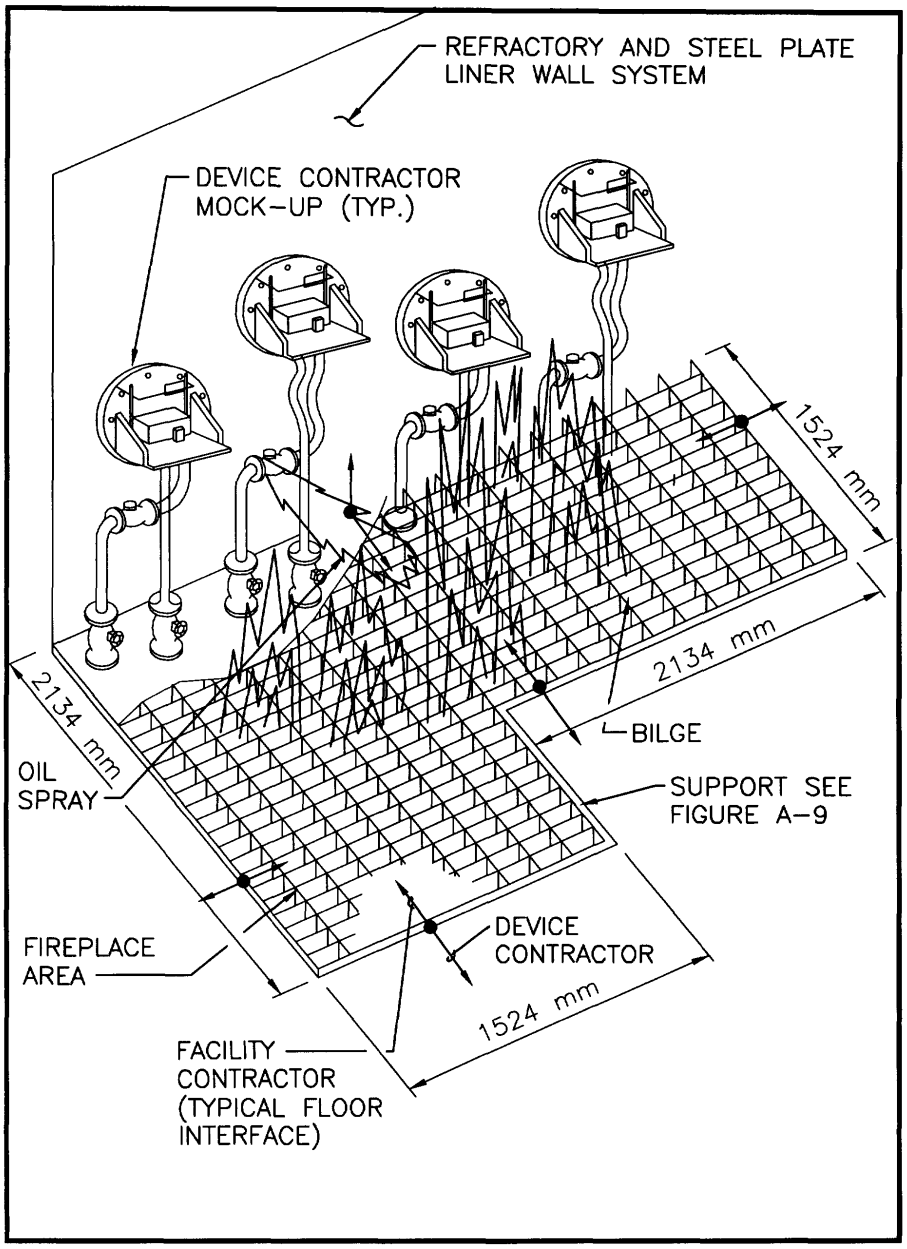

Figure A-1C

19F1A, 19F1B, 19F3, 19F3A, 19F3C
Oil Spray/Bilge Fireplace

APPENDIX A (Continued)

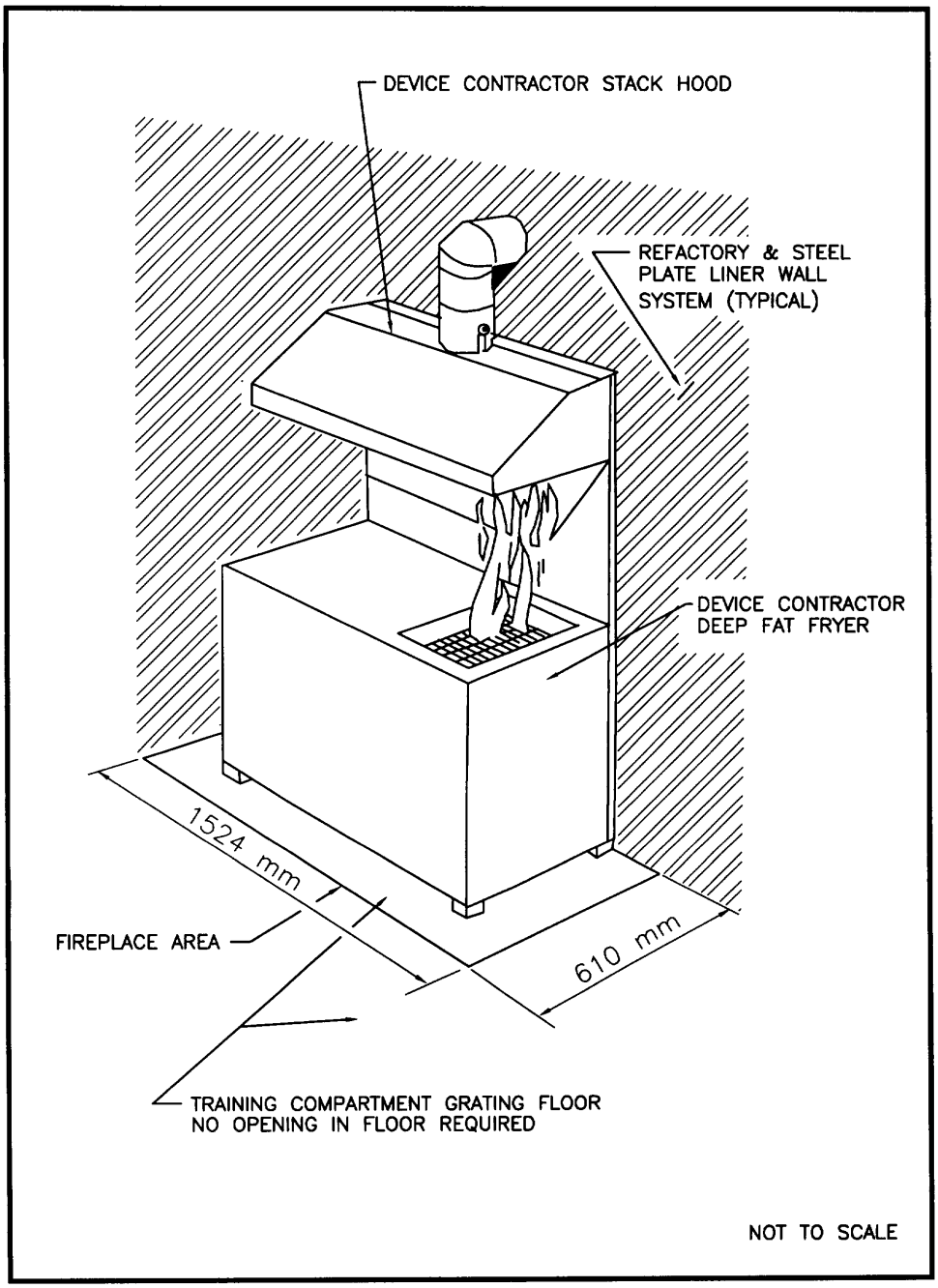

Figure A–2
Typical Deep Fat Fryer Fireplace

APPENDIX A (Continued)

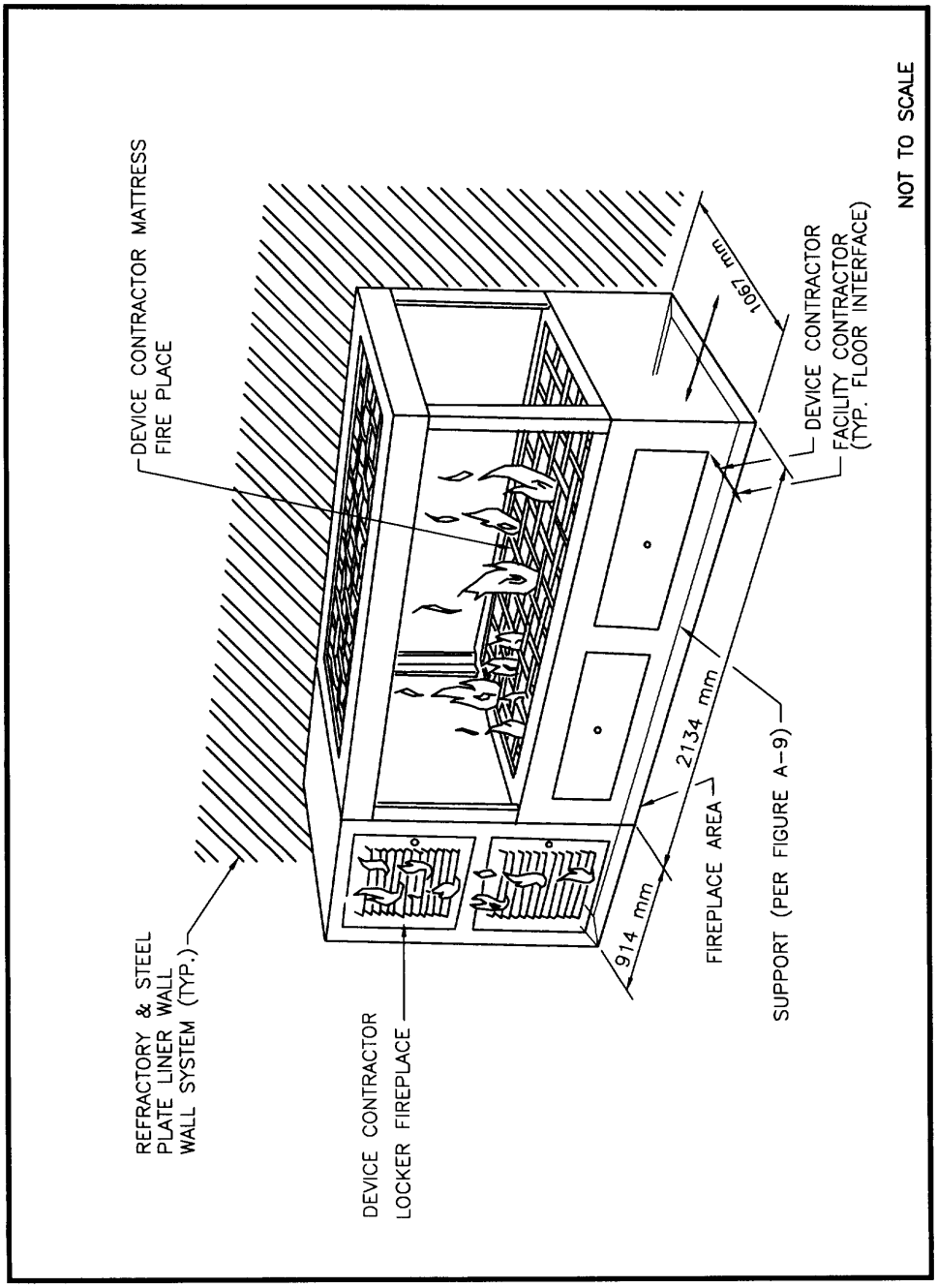

Figure A–3
Typical Mattress/Locker Fireplace

APPENDIX A (Continued)

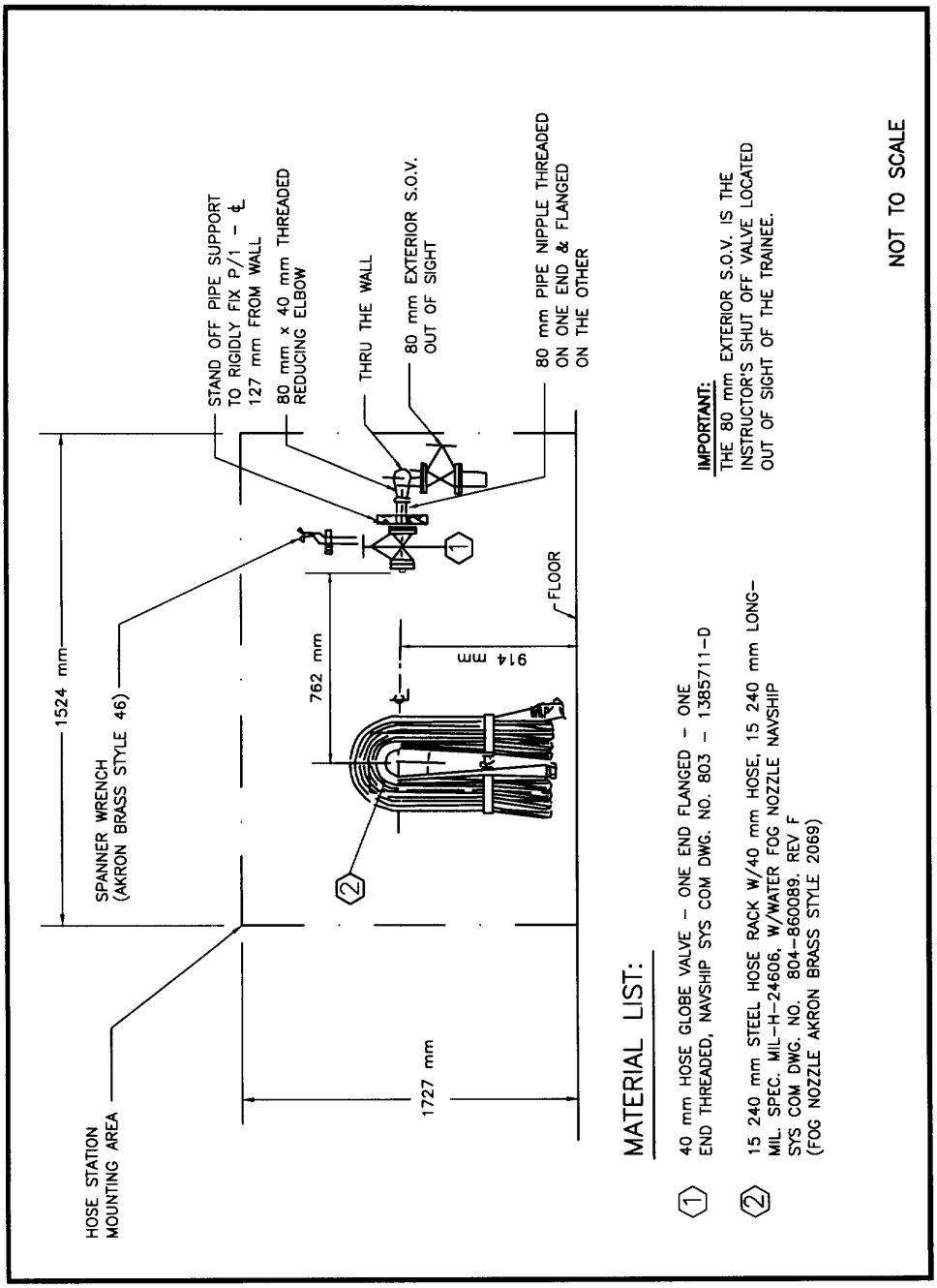

Figure A–4
Hose Station Detail HS1– 40 mm

APPENDIX A (Continued)

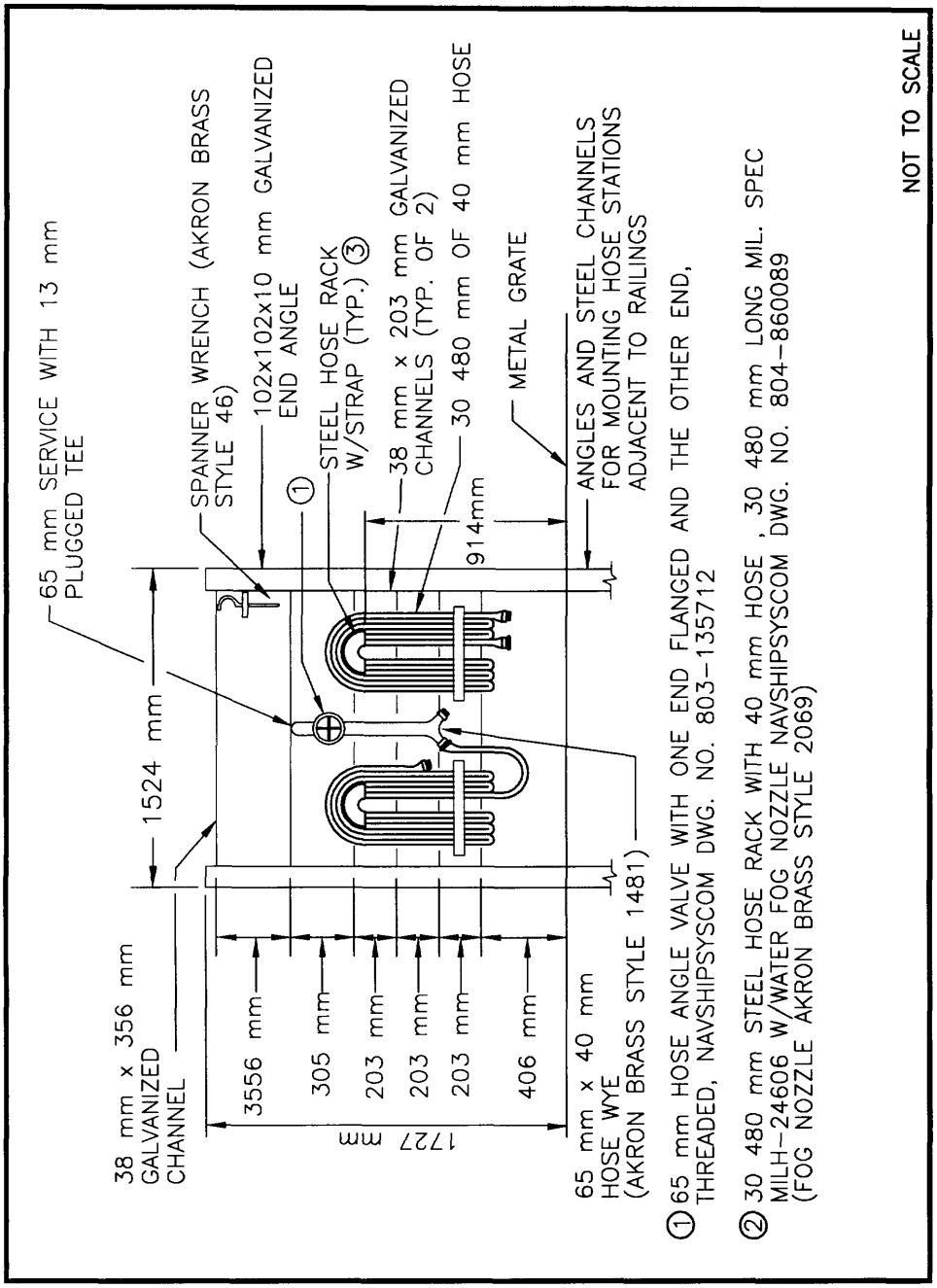

Figure A-5

HS2 – 65 mm Hose Station Detail

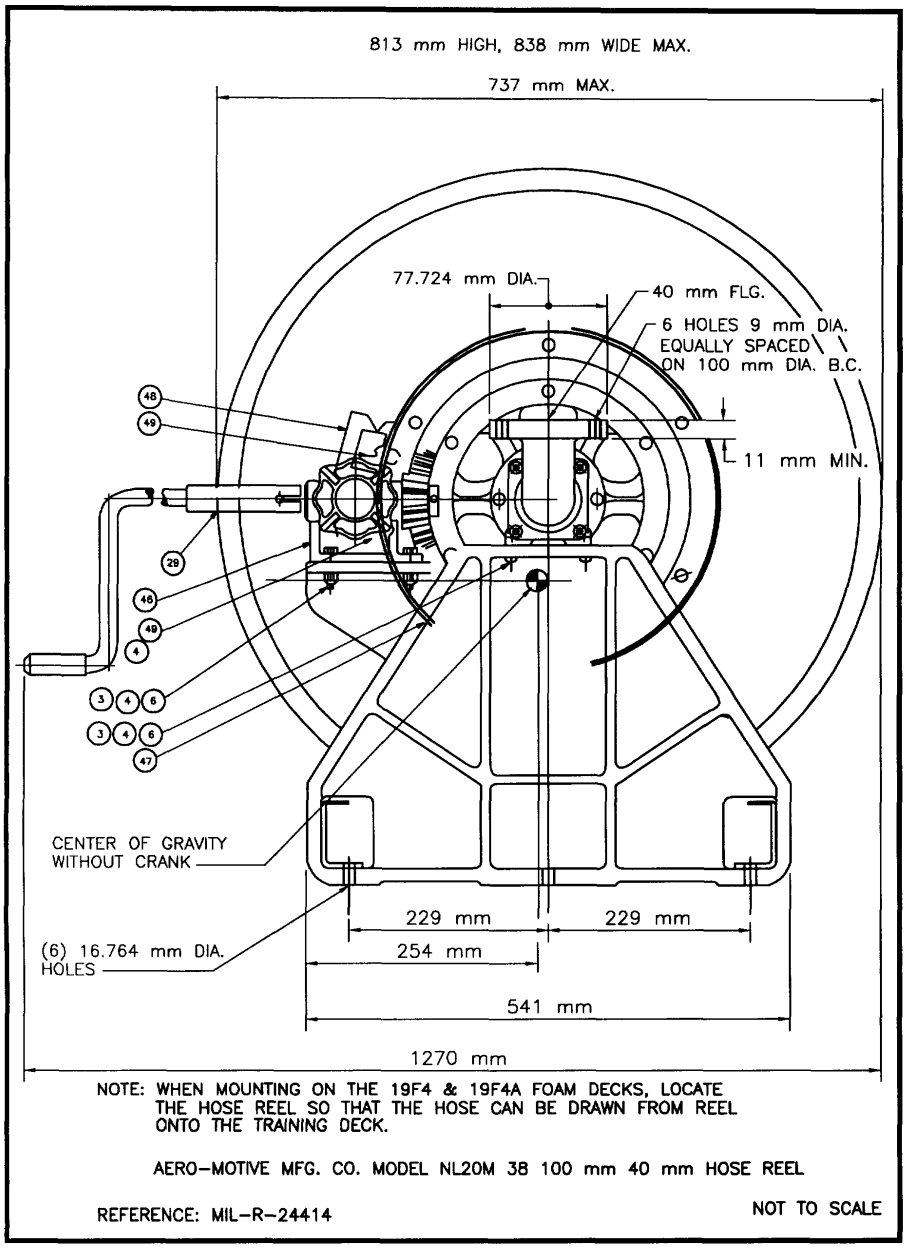

Figure A-6
FR – AFFF Hose Reel Detail

APPENDIX A (Continued)

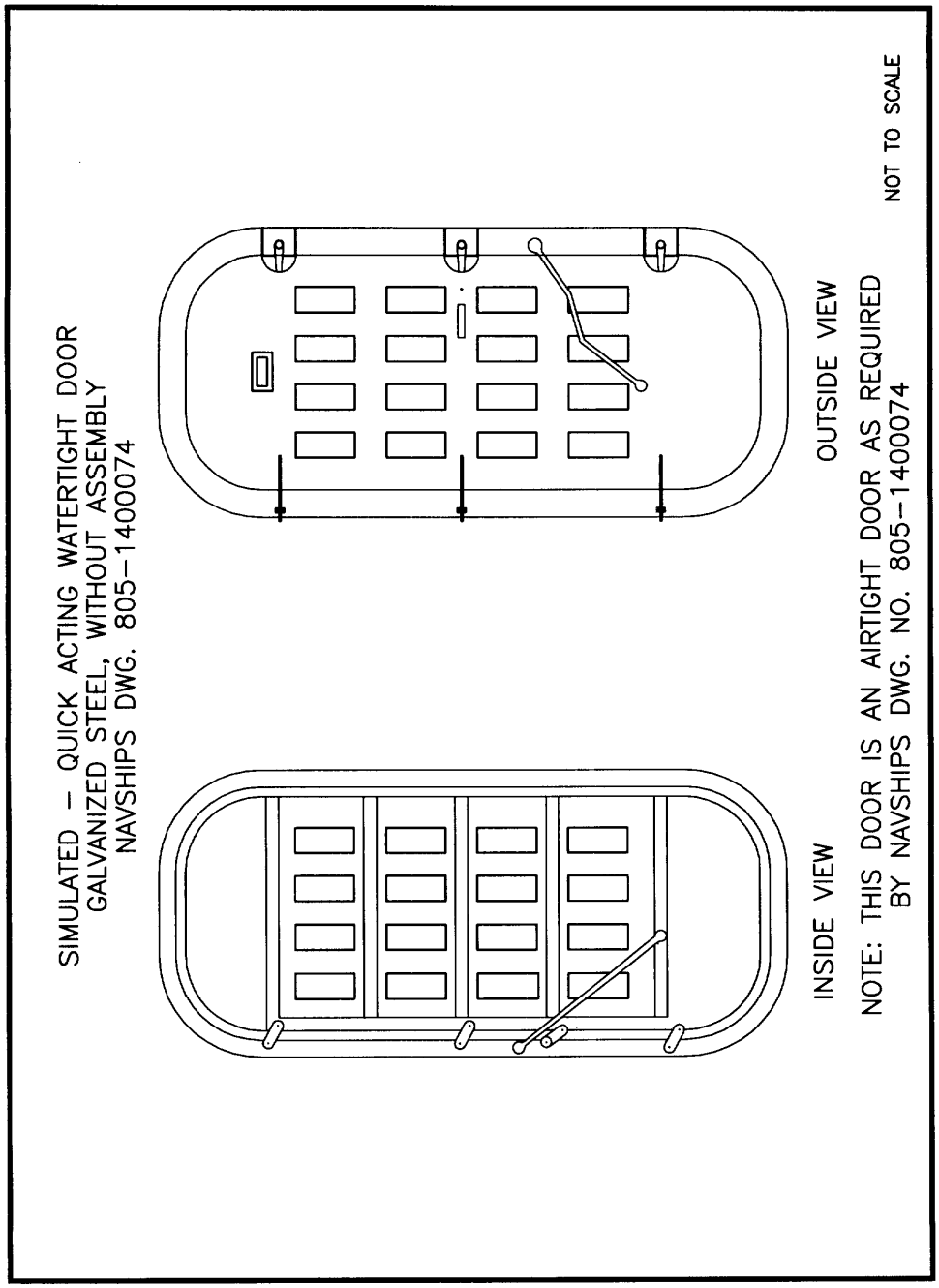

Figure A–7
Quick Acting Watertight Door

APPENDIX A (Continued)

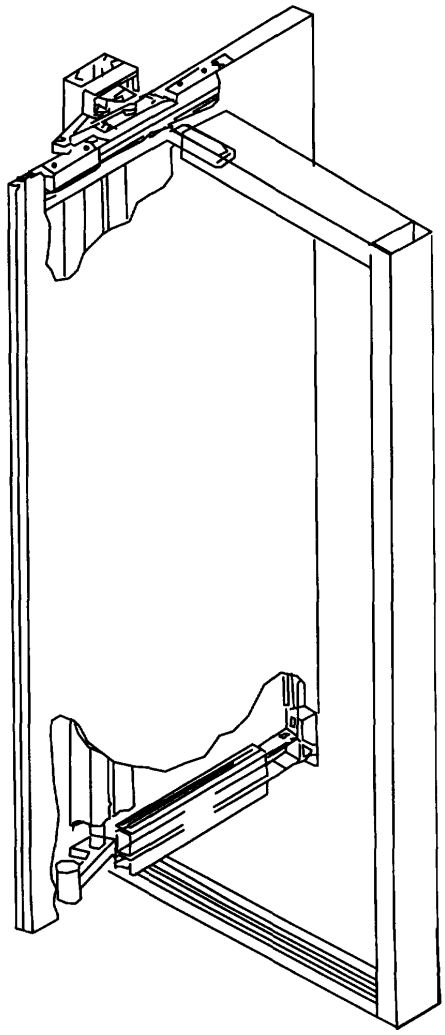

REFERENCE:
NAVSEA DWG. NO. 803–5184129:
DOOR, STEEL, BALANCED.
ELLISON BRONZE CO. INC.

NOT TO SCALE

Figure A–8
Ellison Type Door

APPENDIX A (Continued)

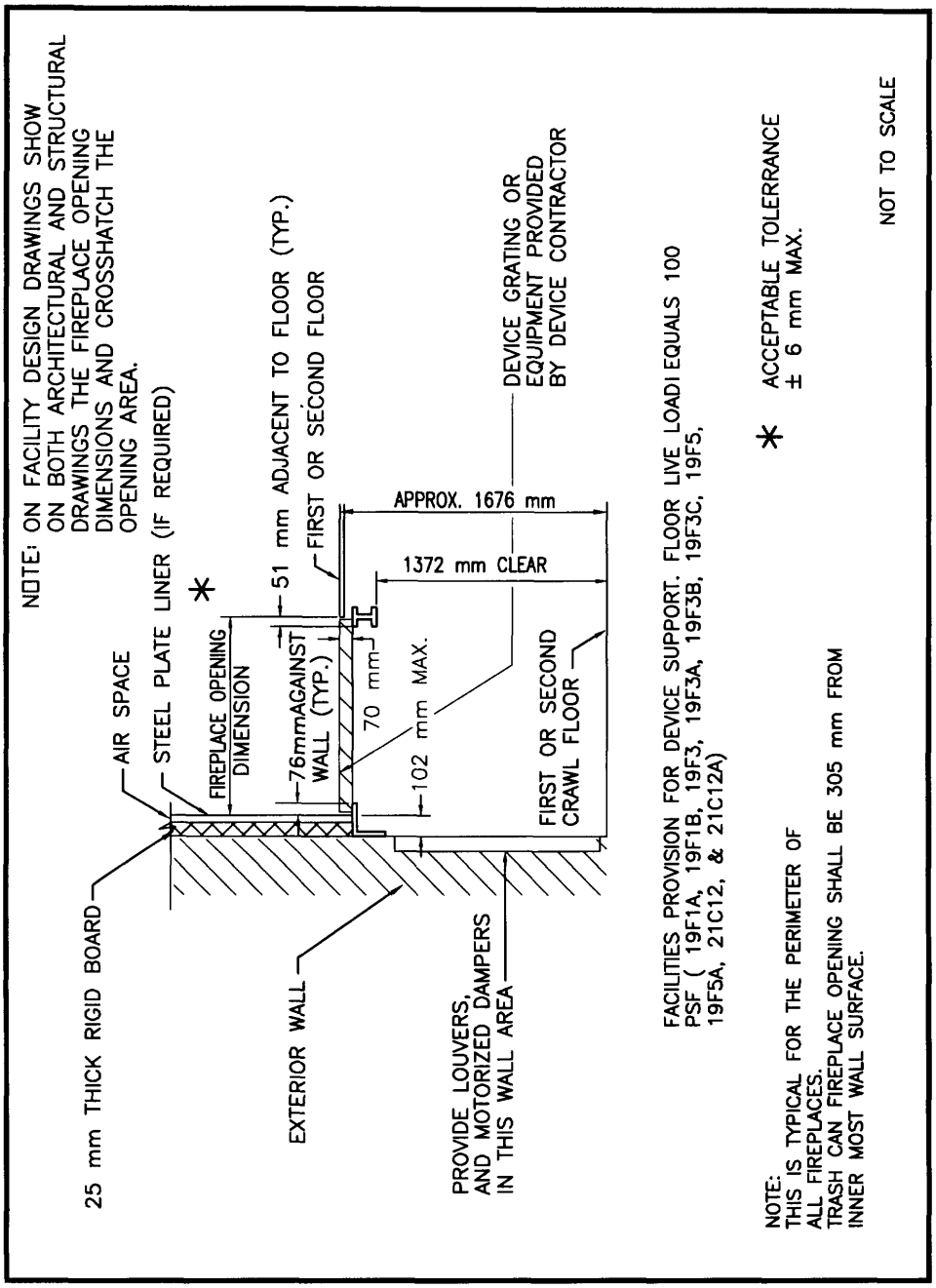

Figure A–9A
Fireplace Support

APPENDIX A (Continued)

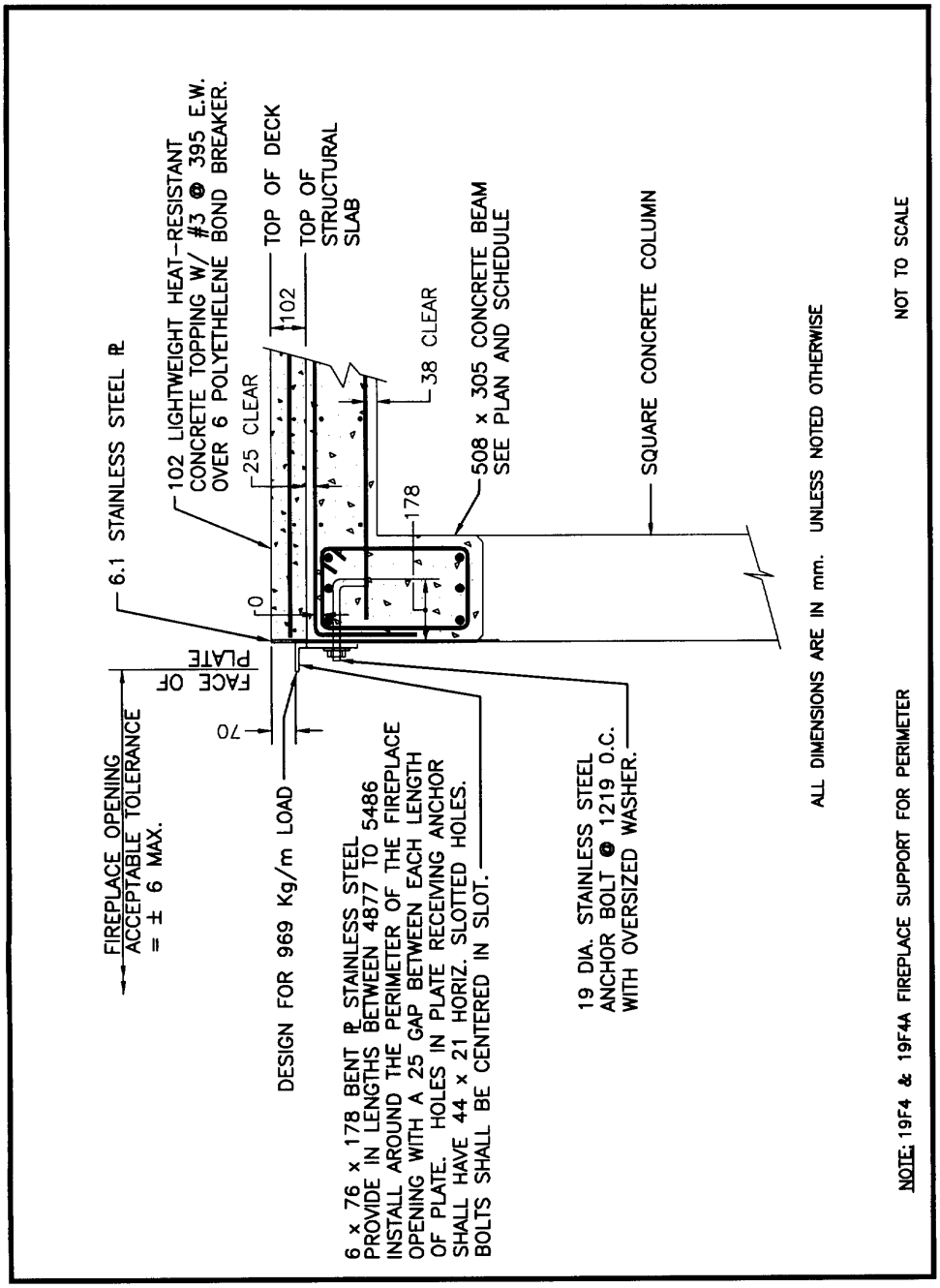

Figure A–9B

FIREPLACE SUPPORT

APPENDIX A (Continued)

DEEP FAT FIRE

PKP emission 0.0690 kg in 6 runs during test
0.011 kg E/run
PKP discharge 2 kg D/run during test
PKP emission rate 0.011 ÷ 2 = 0.005 kg E/kg D

3 Deep fat fires + 4 discretionary fires = 7 fires/class
*2 classes running together x 7 = 14 fires/day
9 kg discharge/fire x 3 fires/hr = 27 kg D/hr
x 14 fires/day = 127 kg D/day
27 kg D/hr x 0.005 kg E/kg D = 0.14 kg E/hr
127 kg D/day x 0.005 kg E/kg D = 0.64 kg E/day

BILGE FIRE

PKP emission 0.011 kg in 6 runs during test
0.002 kg E/run

PKP discharge rate 0.002 ÷ 7 = 0.0003 kg E/kg D
8 bilge fires/class x 2 classes = 16 fires
**9 kg discharge/fire x 6 fires/hr = 54 kg D/hr
x 16 fires/day = 144 kg D/day

54 kg D/hr x 0.0003 kg E/kg D = 0.016 kg E/hr
145 kg D/day x 0.0003 kg E/kg D = 0.048 kg E/day

TOTAL Maximum

***0.14 kg E/hr + 0.016 kg E/hr = 0.156 kg E/hr
27 kg D/hr + 54 kg D/hr = 81 kg D/hr

*0.64 kg E/day + 0.043 kg E/day = 0.684 kg E/day
127 kg D/day + 145 kg D/day = 272 kg D/day

*This represents the worst day where PKP fires for 2 classes were run in 1 day. This is very unlikely.

**7 kg D/run was used during test but figure 9 kg D/run for training purposes.

***Three 20 minute exercises per hour on the deep fat fire and the bilge fire for a total of 6 fires is the maximum training rate.

Figure A-12
Particulate Compliance

APPENDIX A (Continued)

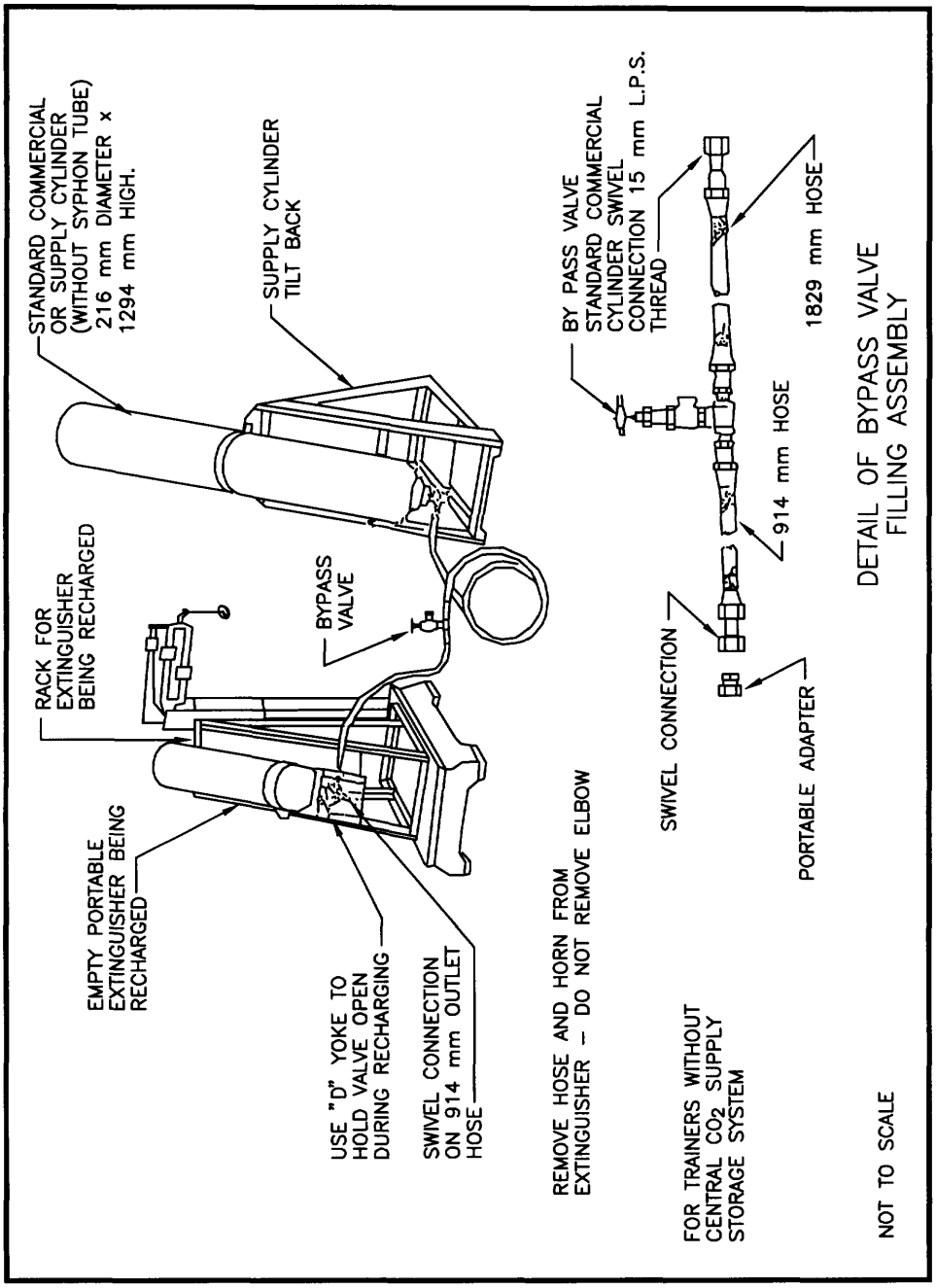

Figure A–11
Recharging Tilt Rack and Fill Equipment

APPENDIX A (Continued)

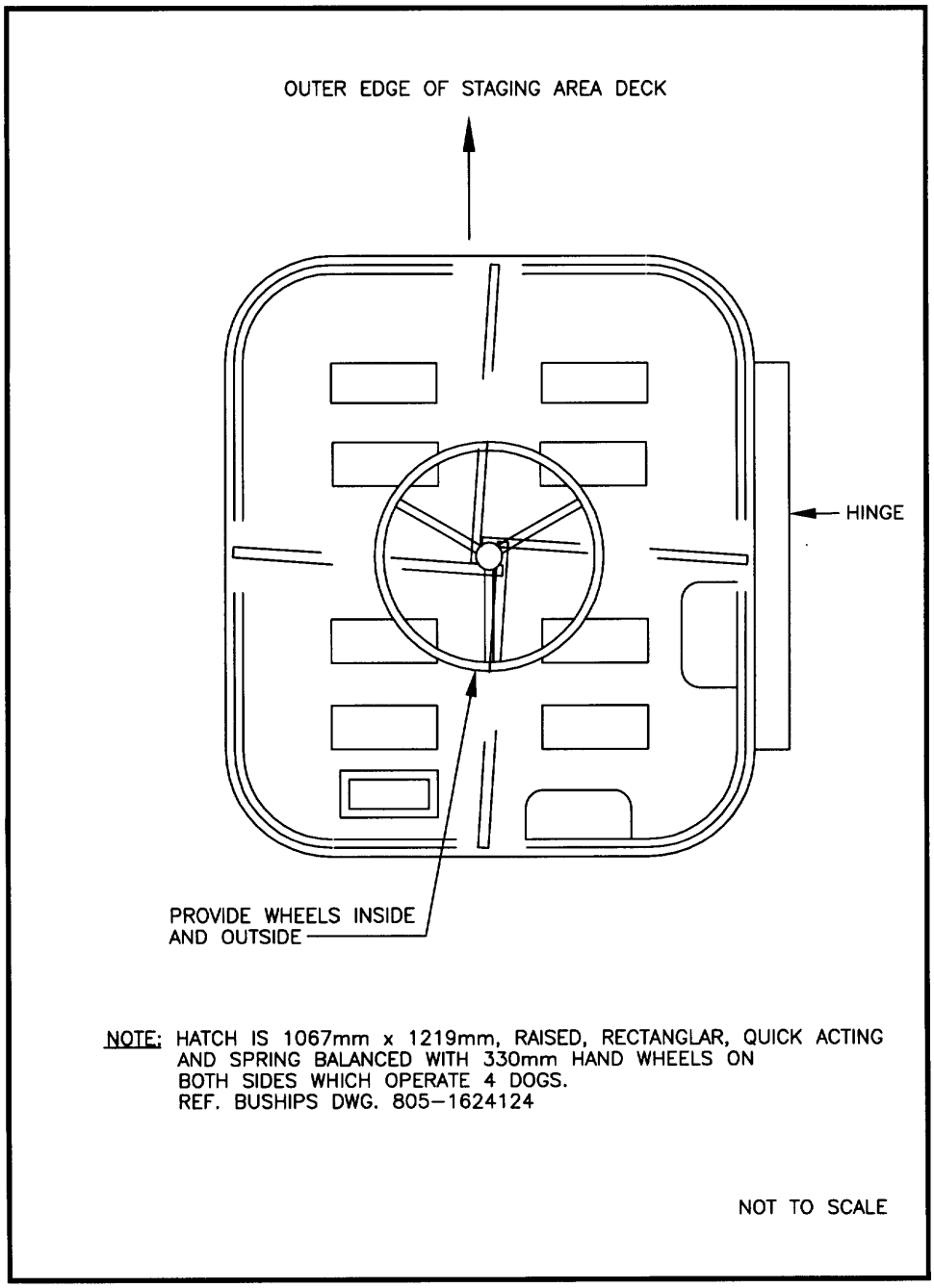

Figure A-12
Watertight Hatch For Emergency Escape Trunk

APPENDIX A (Continued)

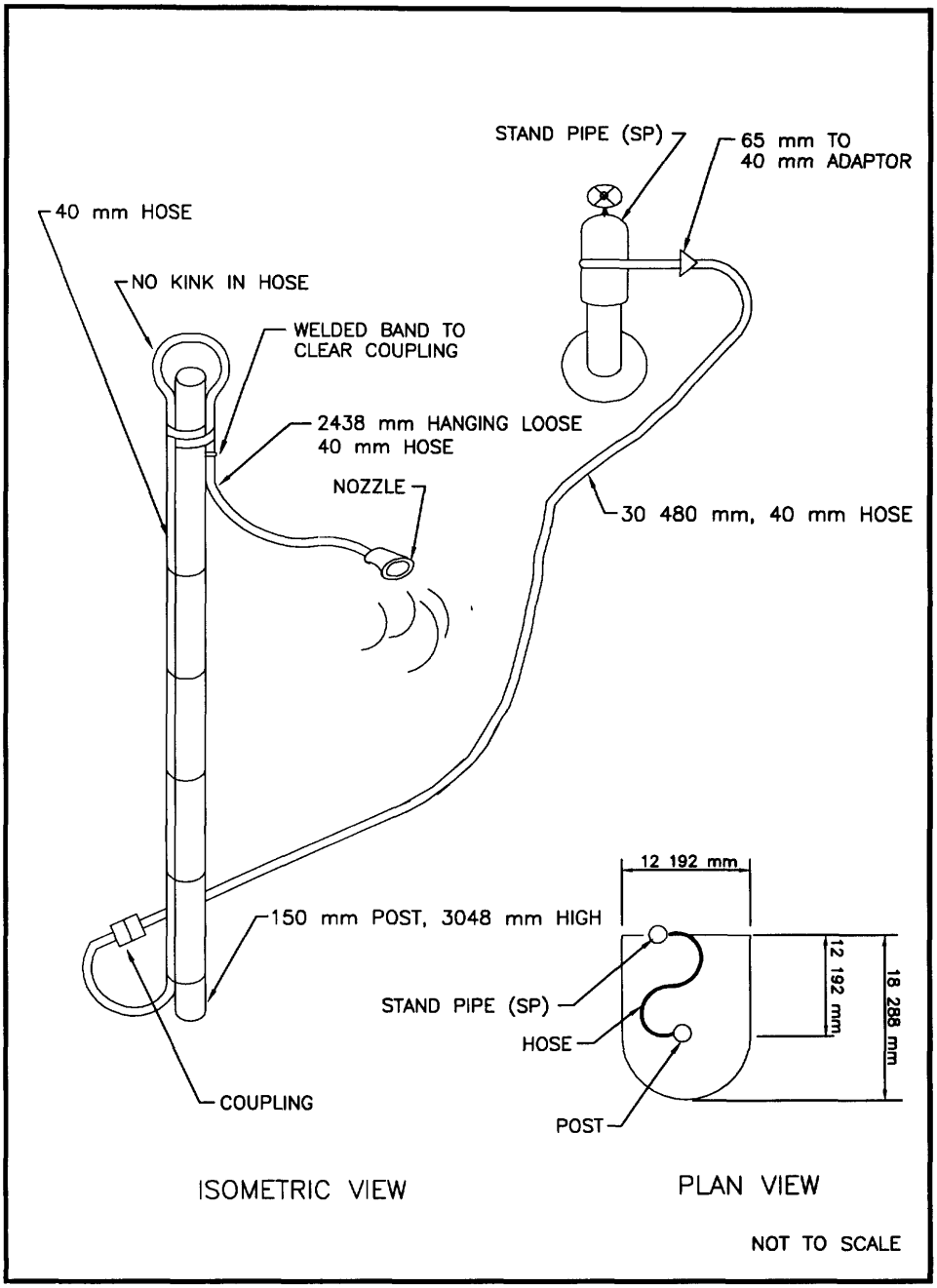

Figure A–13A
Wild Hose Demonstration Facility

APPENDIX A (Continued)

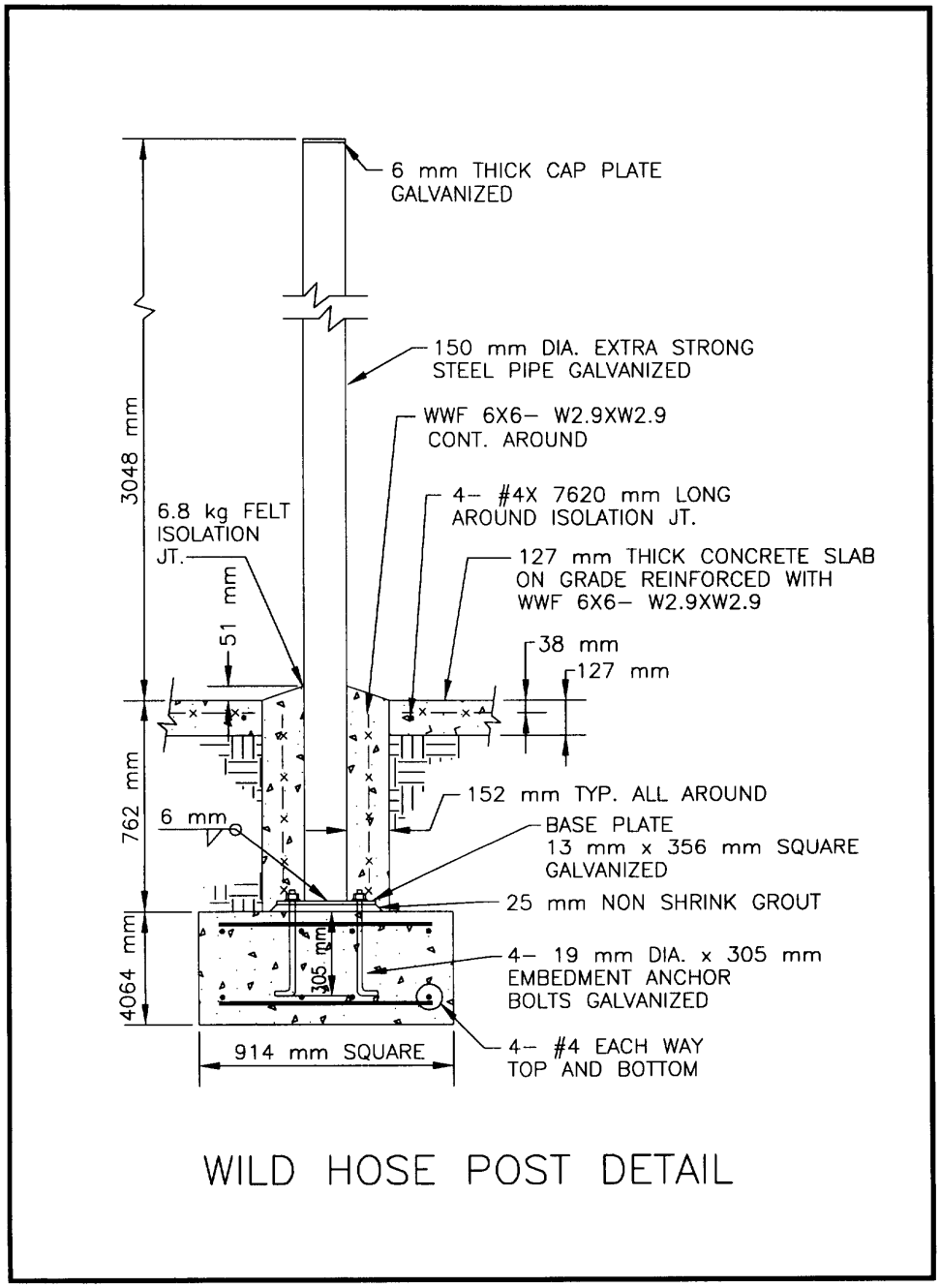

Figure A–13B
WILD HOSE POST DETAIL

APPENDIX A (Continued)

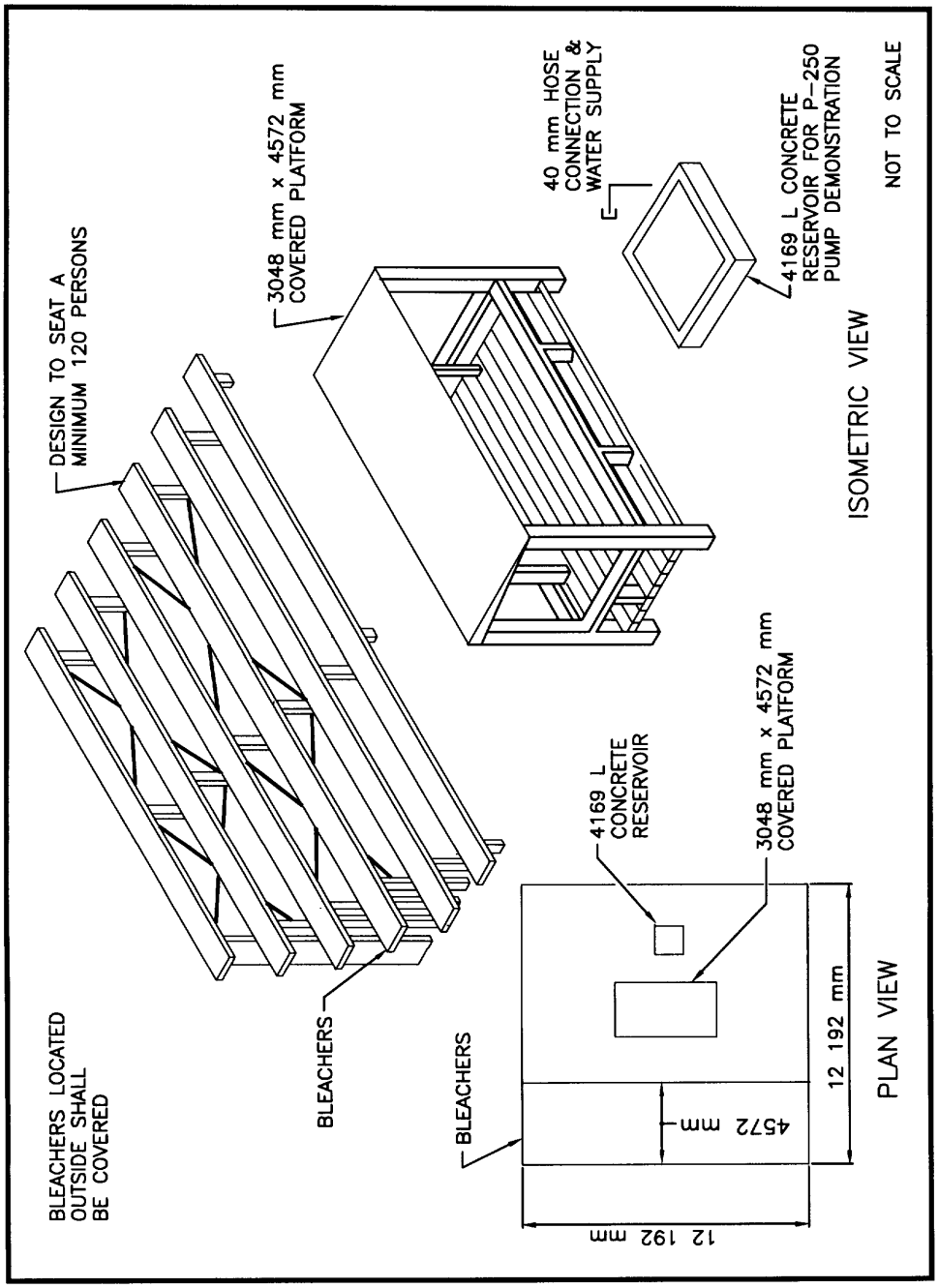

Figure A-14
Portable Pump P-250 Demonstration Facility

APPENDIX A (Continued)

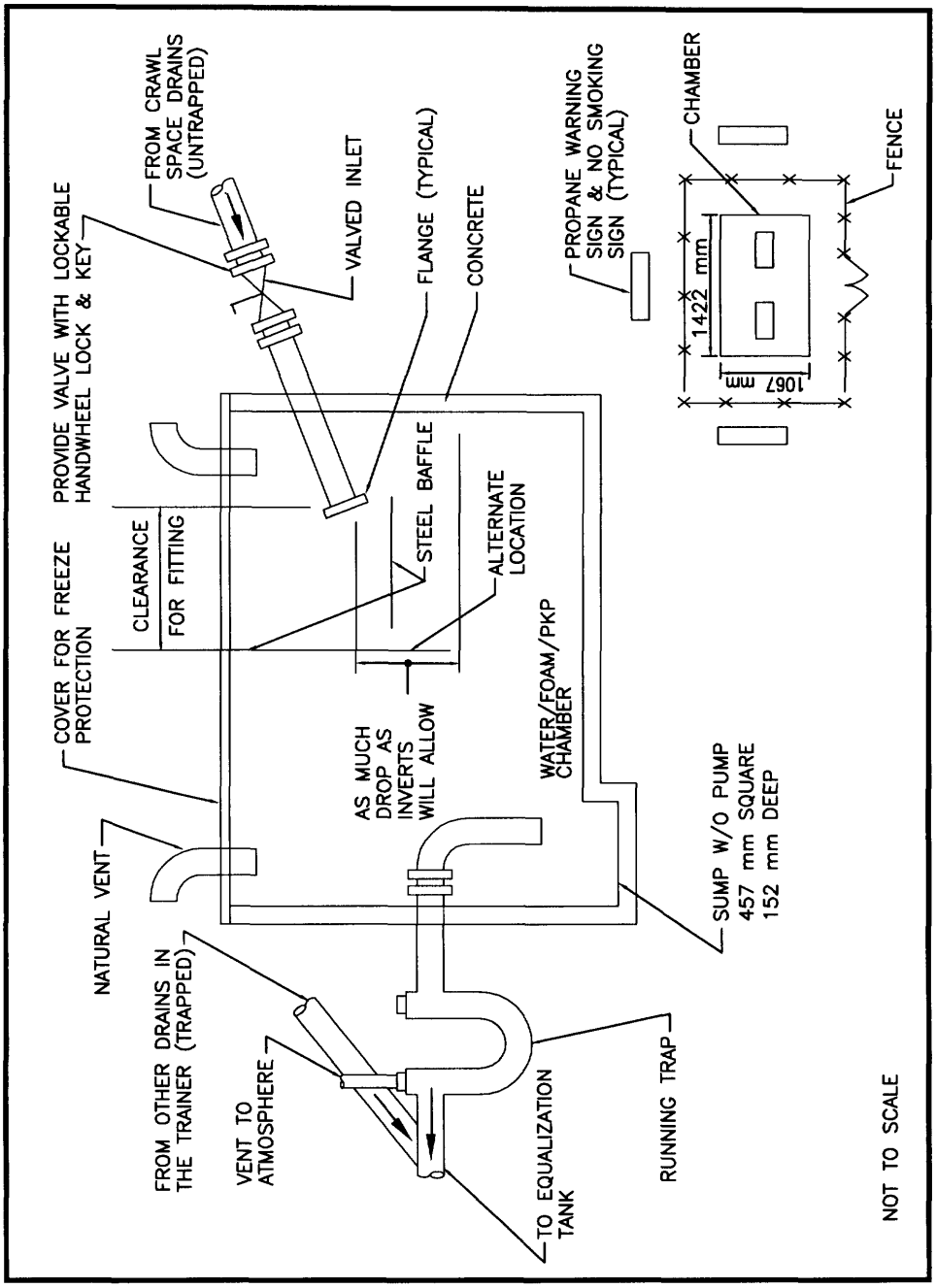

Figure A–15
Separation Chamber, 21C12 and 19F Series Devices

APPENDIX A (Continued)

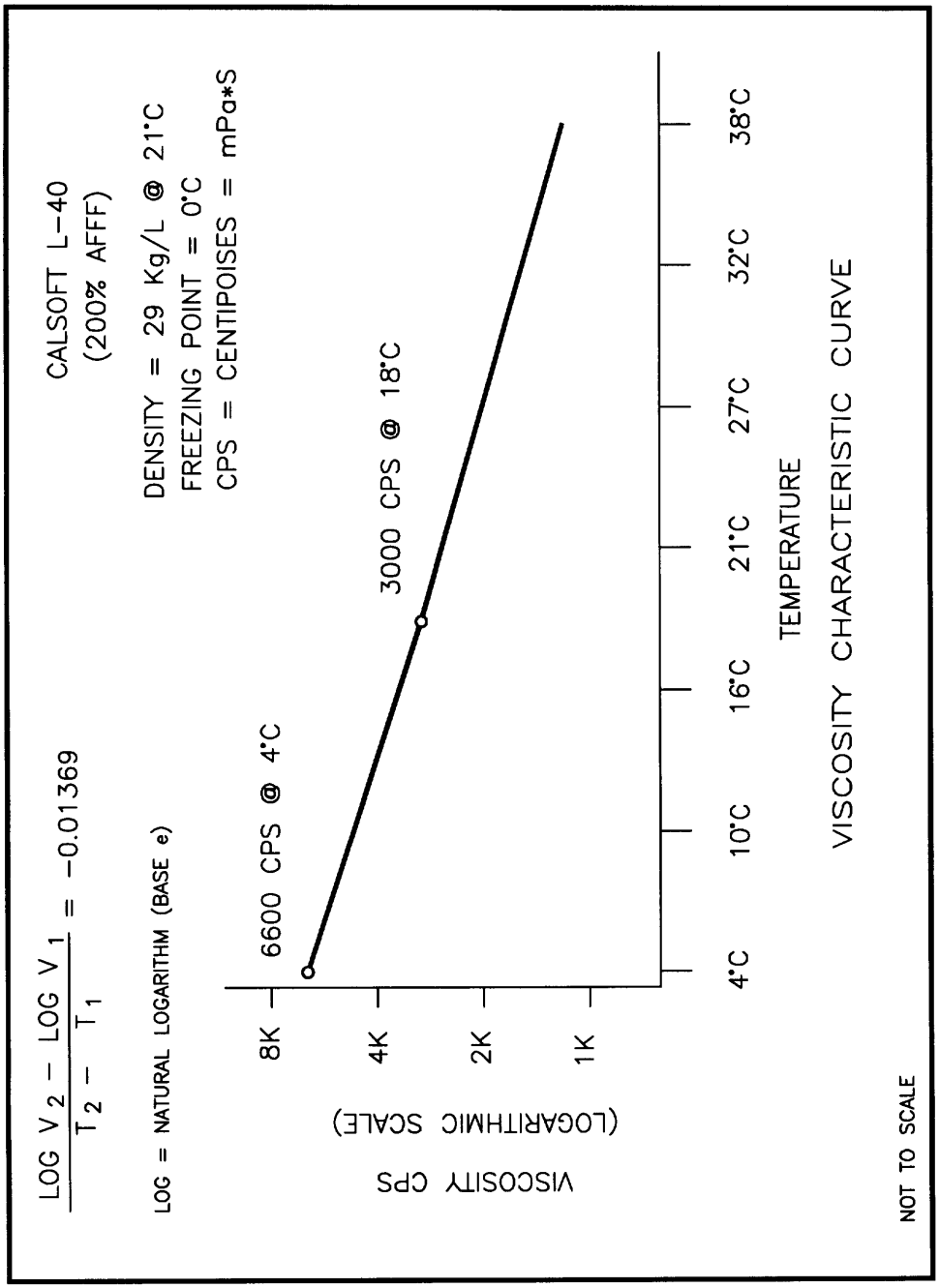

Figure A-16
Calsoft L-40 Viscosity Characteristic Curve

APPENDIX A (Continued)

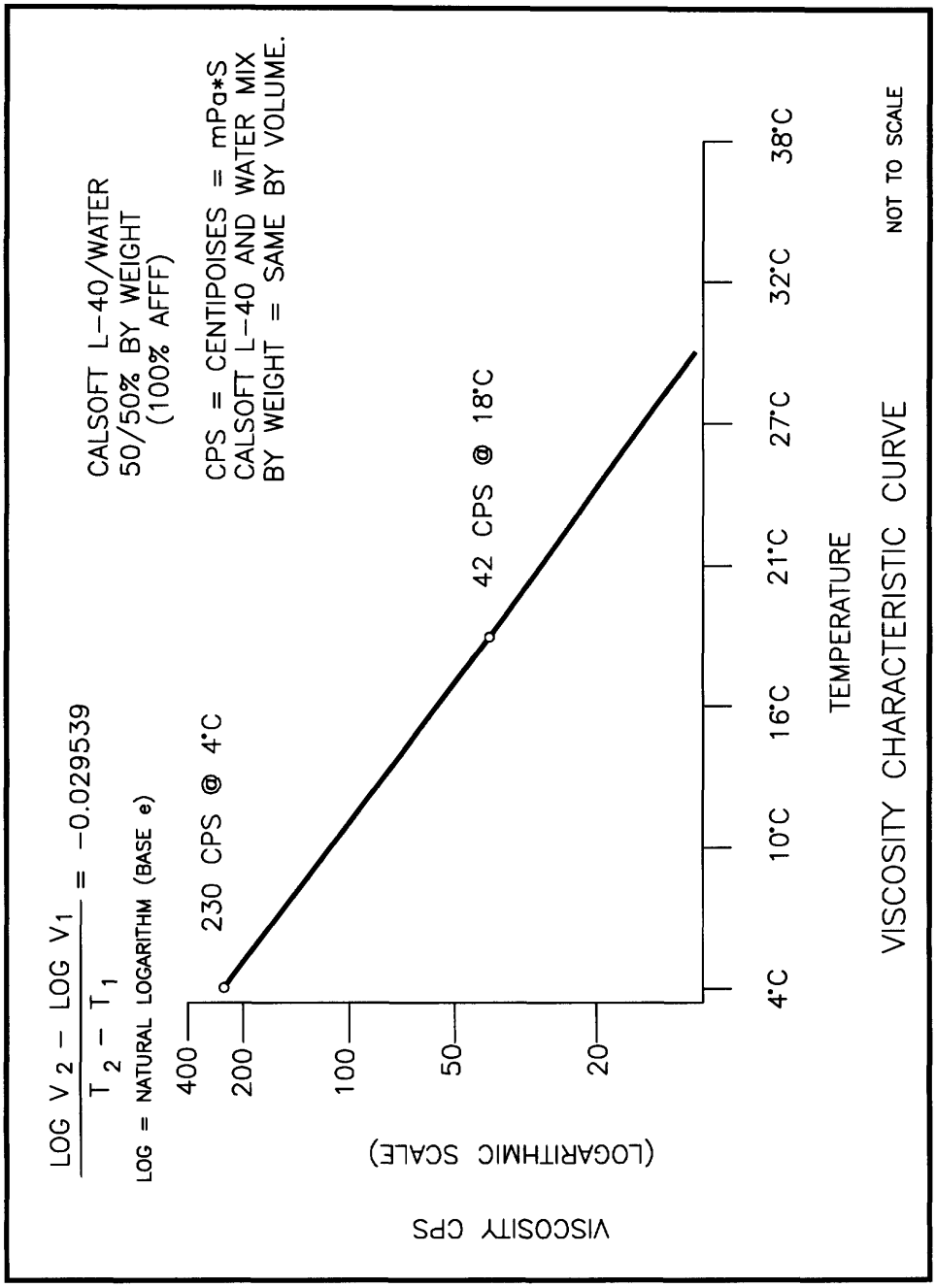

Figure A−17
Calsoft L−40/Water Viscosity Characteristic Curve

APPENDIX A (Continued)

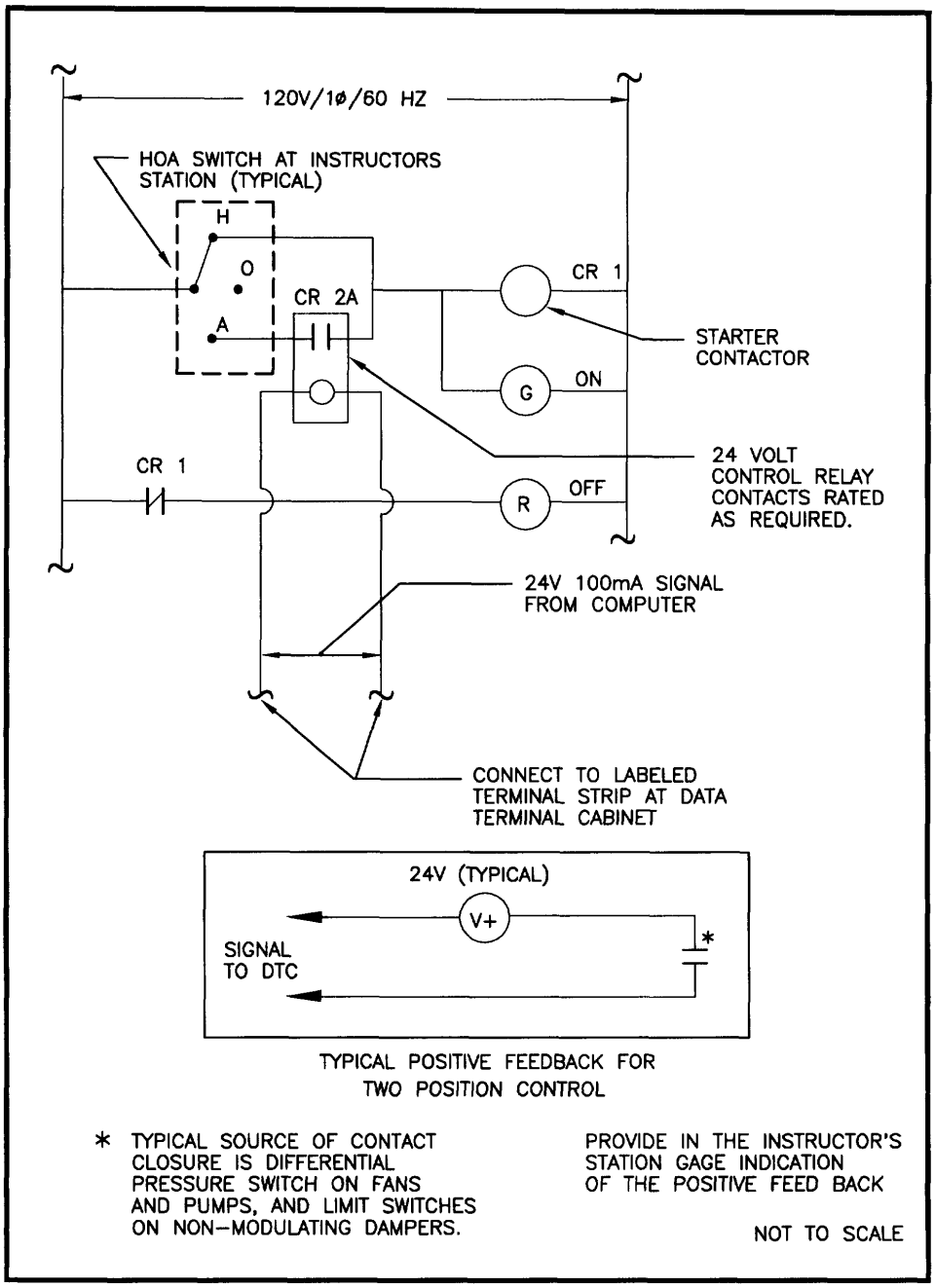

Figure A-18
Two Position Control Interface

APPENDIX A (Continued)

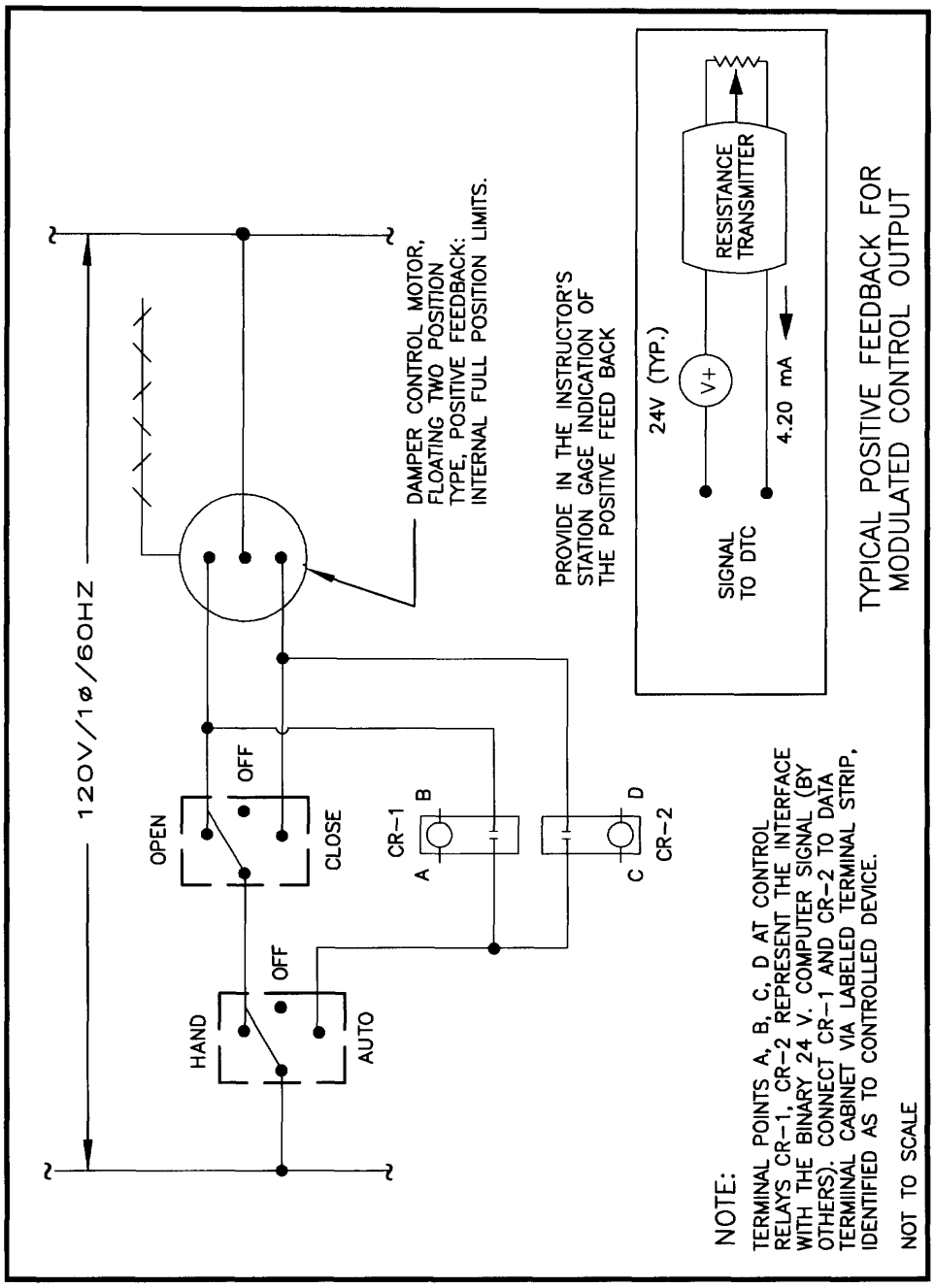

Figure A-19
Floating Point Control Interface

APPENDIX A (Continued)

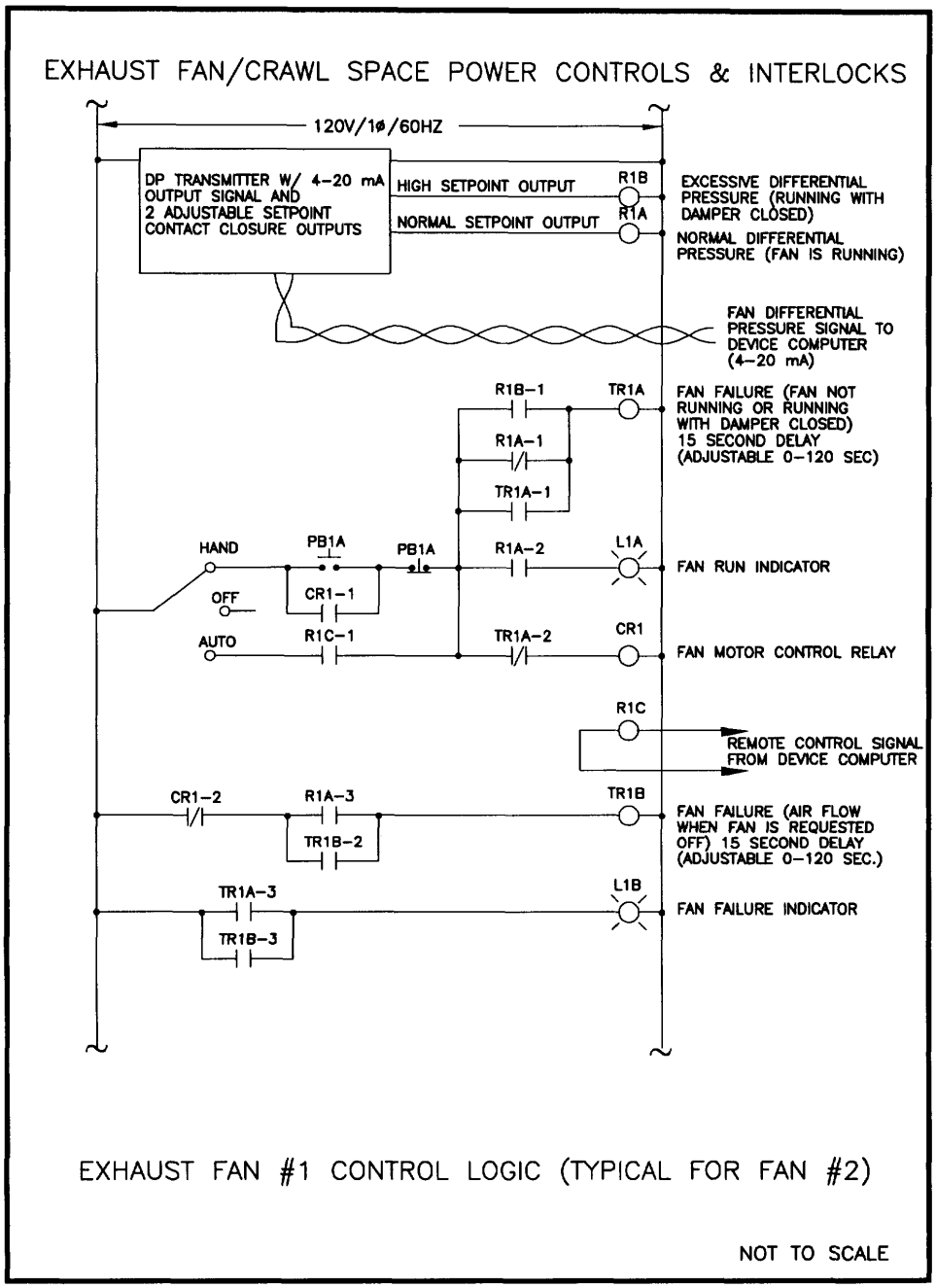

Figure A-20A
EXHAUST FAN/CRAWL SPACE
POWER CONTROLS & INTERLOCKS

APPENDIX A (Continued)

EXHAUST FAN SEQUENCE OF OPERATION:

HAND MODE: WHEN THE START PUSHBUTTON, PB1A, IS PRESSED, THE FAN CONTROL RELAY, CR1, ENERGIZES AND LATCHES IN THE CIRCUIT. AS THE FAN COMES UP TO SPEED, MINIMUM AIRFLOW DIFFERENTIAL PRESSURE IS GENERATED, ACTIVATING R1A. THIS CAUSES THE RUN INDICATOR, L1A, TO LIGHT. PRESSING THE STOP BUTTON, PB1B, UNLATCHES THE CIRCUIT WHICH DEENERGIZES THE FAN CONTROL RELAY AND RUN INDICATOR.

AUTO MODE: WHEN THE REMOTE CONTROL RELAY, R1C, IS ENERGIZED, THE FAN CONTROL RELAY, CR1, IS ALSO ENERGIZED. AS THE FAN COMES UP TO SPEED, MINIMUM AIRFLOW DIFFERENTIAL PRESSURE IS GENERATED, ACTIVATING R1A. THIS CAUSES THE RUN INDICATOR, L1A, TO LIGHT. DEENERGIZING THE DEVICE COMPUTER CONTROL RELAY RELEASES THE FAN CONTROL RELAY AND TURNS OFF THE RUN INDICATOR.

INTERLOCKS AND ALARMS (HAND AND AUTO MODES): IF NORMAL DIFFERENTIAL PRESSURE IS SENSED (FAN IS RUNNING), RELAY R1A IS ENERGIZED. EXCESSIVE DIFFERENTIAL PRESSURE (FAN RUNNING WITH DAMPER CLOSED) CAUSES R1B TO ENERGIZE. WHEN THE FAN IS COMMANDED ON AND EITHER INSUFFICIENT OR EXCESSIVE DIFFERENTIAL PRESSURE IS SENSED FOR 15 SECONDS, RELAY TR1A (TR2A) ENERGIZES AND LATCHES IN. THIS DEENERGIZES THE FAN CONTROL RELAY, CR1 AND LIGHTS THE FAN FAILURE INDICATOR, L1B. WHEN THE FAN IS COMMANDED OFF AND NORMAL DIFFERENTIAL PRESSURE IS SENSED FOR 15 SECONDS, RELAY TR1B ENERGIZES AND LATCHES IN. THIS ALSO CAUSES INDICATOR L1B TO LIGHT.

NOTES:
1. CONTROL LOGIC MAY BE IMPLEMENTED IN DISCRETE HARDWARE OR IN A SMALL PROGRAMMABLE LOGIC CONTROLLER.
2. TIMER RELAYS PROVIDE A DELAY AS NOTED AFTER POWER IS APPLIED. WHEN POWER IS REMOVED THE CONTACTS RESET IMMEDIATELY.

Figure A-20B
Exhaust Fan/Crawl Space Power Controls and Interlocks

APPENDIX A (Continued)

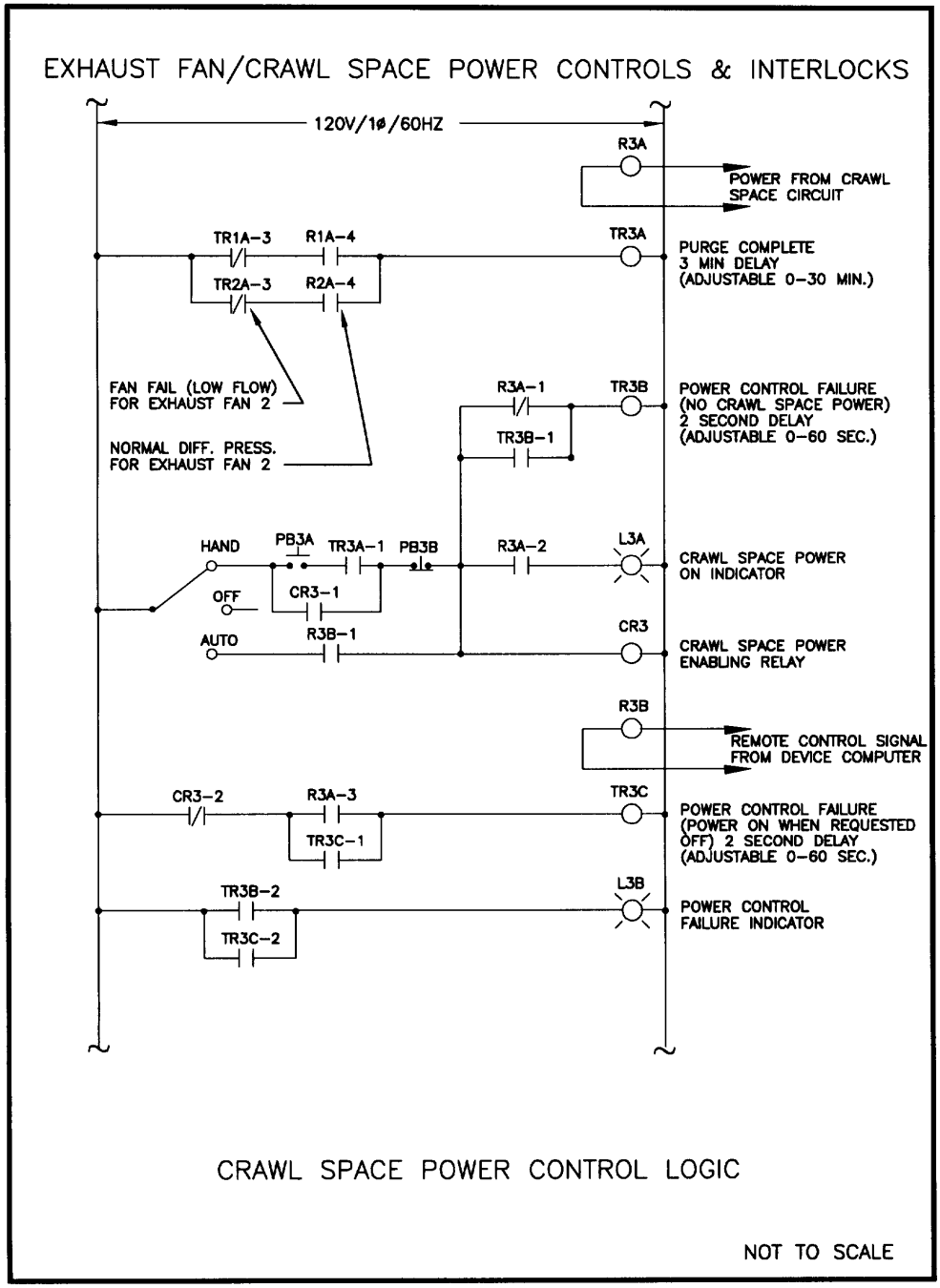

Figure A-20C
EXHAUST FAN/CRAWL SPACE
POWER CONTROLS & INTERLOCKS

APPENDIX A (Continued)

CRAWL SPACE POWER SEQUENCE OF OPERATION:

HAND MODE: WHEN EITHER FAN IS ON FOR 10 MINUTES WITHOUT A DETECTED FAILURE, THE PURGE COMPLETE RELAY, TR3A, IS ENERGIZED. WHEN THE ON PUSHBUTTON, PB3B, IS PRESSED AND TR3A IS ENERGIZED, THE CRAWL SPACE POWER RELAY, CR3, ENERGIZES AND LATCHES IN THE CIRCUIT. THIS PROVIDES POWER TO THE CRAWL SPACE, ENERGIZING RELAY R3A AND LIGHTING THE POWER INDICATOR, L3A. PRESSING THE OFF PUSHBUTTON, PB3B, UNLATCHES THE CIRCUIT WHICH DEENERGIZES THE POWER CONTROL RELAY AND POWER INDICATOR.

AUTO MODE: WHEN THE REMOTE CONTROL RELAY, R3B, IS ENERGIZED, THE FAN CONTROL RELAY, CR3, IS ALSO ENERGIZED. THIS PROVIDES POWER TO THE CRAWL SPACE, ENERGIZING RELAY R3A AND LIGHTING THE POWER INDICATOR, L3A. WHEN THE DEVICE COMPUTER CONTROL RELAY RELEASES, THE CRAWL SPACE POWER RELAY AND INDICATOR DEENERGIZE.

ALARMS (HAND AND AUTO): IF RELAY R3A DOES NOT ENERGIZE WITHIN 2 SECONDS AFTER POWER IS COMMANDED ON, POWER FAILURE RELAY TR3B ENERGIZES AND LATCHES ON. IF RELAY R3A DOES NOT DEENERGIZE WITHING 2 SECONDS AFTER POWER IS COMMANDED OFF, POWER FAILURE RELAY TR3C ENERGIZES AND LATCHES ON. WHENEVER EITHER POWER FAILURE RELAY IS COMMANDED THE POWER CONTROL FAILURE INDICATOR, L3B, LIGHTS.

NOTES:
1. CONTROL LOGIC MAY BE IMPLEMENTED IN DISCRETE HARDWARE OR IN A SMALL PROGRAMMABLE LOGIC CONTROLLER.
2. TIMER RELAYS PROVIDE A DELAY AS NOTED AFTER POWER IS APPLIED. WHEN POWER IS REMOVED THE CONTACTS RESET IMMEDIATELY.

Figure A-20D
Exhaust Fan/Crawl Space Power Controls and Interlocks

APPENDIX A (Continued)

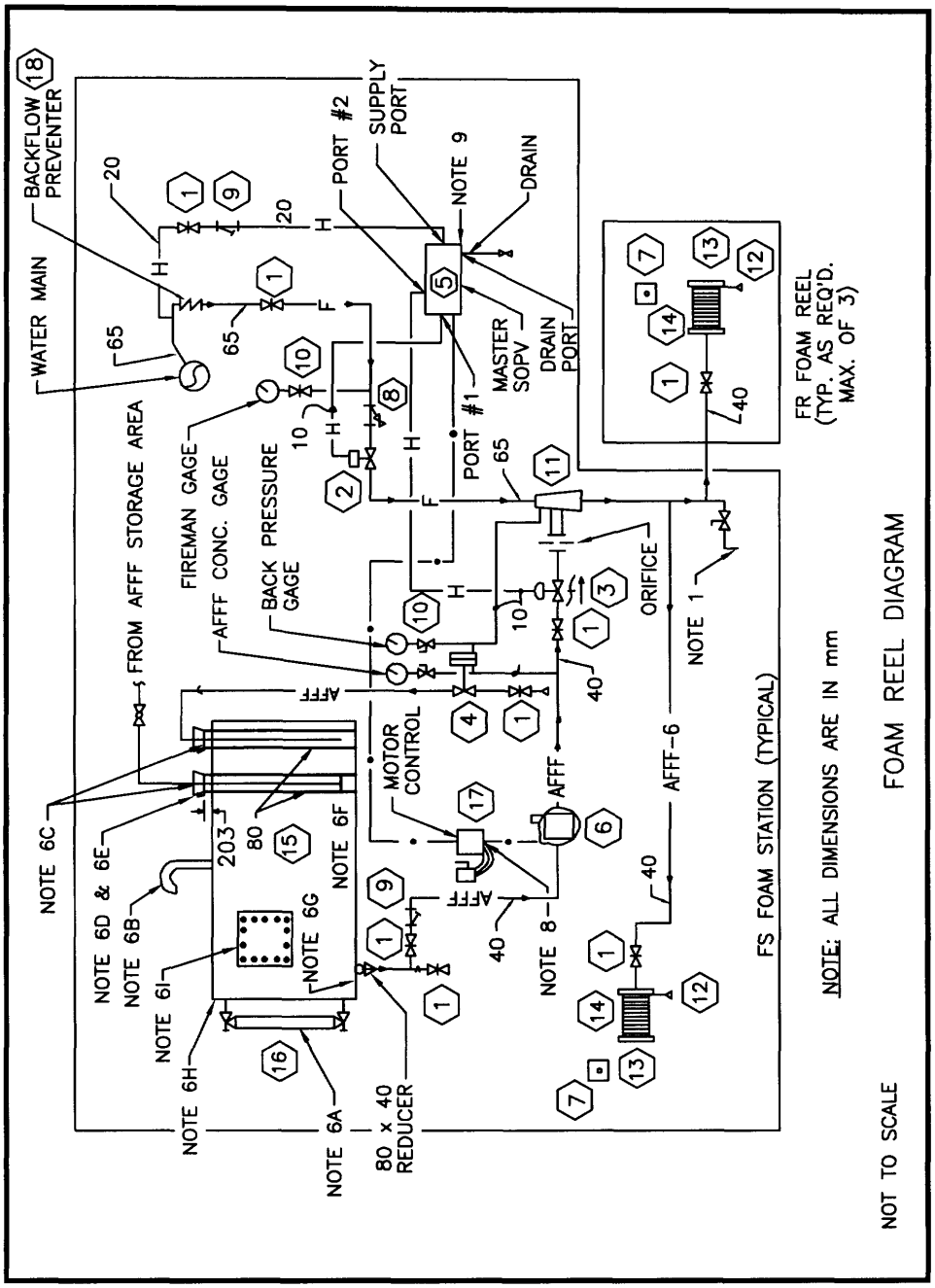

Figure A–21A
AFFF Station

AFFF STATION

EQUIPMENT IDENTIFICATION			
NO	DESCRIPTION	REFERENCE	SOURCE OF SUPPLY
1	GATE VALVE		STANDARD COMM.–2067 kPa WOG
2	WATER MAIN CONT. VALVE TO STATION (HYCHECK)	MIL–F–20042	CLAVAL MOD. 18M–EP/181M–EPKH
3	AFFF CONCENTRATE DISCHARGE CONT. VALVE (POWER CHECK)	MIL–F–20042	CLAVAL MOD. 181PM–EP
4	BACK PRESS. REGULATING VALVE	MIL– V–18930 P–24539	FEECON PART 00875040
5	MASTER SOPV (SOL OPERATED PILOT VALVE)	MIL–V–15508	CLAVAL MODEL CSM5M–3A
6	PUMP (2.2 L/s @ 1378 kPa HEAD)	MIL–P–19131	BLACKMER PUMP MODEL BXL–11/4
7	PUSHBOTTON STATION		STANDARD COMM.(RAINTIGHT)
8	MARINE FIRE MAIN STRAINER		STANDARD COMM.–2067 kPa WOG
9	STRAINER		STANDARD COMM.–2–67 kPa WOG
10	PRESSURE GAUGE (0–2067 kPa)		STANDARD COMM.
11	FLOW PROPORTIONER	MIL–P–24589	FEECON PART 00897750
12	FOAM NOZZLE SINGLE AGENT 6 L/s	MIL-N-24480 TYPE1	AKRON BRASS STYLE 3019
13	HOSE REEL SINGLE AGENT	MIL–R–24414	AERO–MOTIVE MFG CO. MODEL NL20M
14	HOSE SOFT HARD RUBBER	MIL–H–24580	STANDARD COMM.
15	AFFF CONCENTRATE TANK		SEE NOTE 3 & 6
16	SIGHT GLASS W/GLASS GUARD		STANDARD COMM.–2067 kPa WOG
17	MOTOR CONTROLLER		CONTRACTOR FIELD FABRICATED
18	BACKFLOW PREVENTER		STANDARD COMM.

SYMBOL	DESCRIPTION
F	1206 kPa WATER MAIN
H	HYDRAULIC CONTROL SYSTEM
AFFF	AFFF CONCENTRATE
AFFF–6	6% FOAM–WATER SOLUTION
	GATE VALVE W/LOCKING PIN
	STRAINER
	PET COCK.
	POWER/CONTROL WIRING
	REMOTE CONTROL VALVE HYDRAULIC OPER. DIAPHRAM TYPE. CONTROL LINE PRESS. TO CLOSE. WITH (NYCECK CONF.)
	PRESSURE GAUGE W/GAUGE COCK
	MARINE FIRE MAIN STRAINER
	GLOBE VALVE

NOT TO SCALE

Figure A–21B
AFFF Station

APPENDIX A (Continued)

NOTES:

1. LOCATE SAMPLE COCK SO IT CAN FILL A 19 L AFFF CAN.

2. ALL PIPES SHOULD BE PIPED TO ALLOW DRAINING FOR FREEZE PROTECTION. PROVIDE DRAINS AT LOW POINTS.

3. TANK SIZE: 19F1A-303 L
19F3-B1-303 L
19F3-B3-379 L
19F3-B4-379 L
19F3A -379 L
19F5 -379 L

4. SOURCE OF SUPPLY IS THE REQUIRED SOURCE OF SUPPLY.

5. PAINT WATER PIPING RED AFFF CONCENTRATE PIPING GREEN, 6% AFFF PIPING RED AND GREEN STRIPED, EXCEPT AT FOAM STATION WHERE ONLY THE VALVE HANDLES SHOULD BE COLOR CODED.

6. THE TANK SHOULD HAVE:

(A) AN EXTERNALLY MOUNTED LIQUID LEVEL INDICATOR ASSEMBLY PROTECTED FROM BREAKAGE BY AN EXPANDED METAL CASE.

(B) A GOOSENECK PIPE VENT 25 MM IN DIAMETER.

(C) TWO 200 MM INSIDE DIAMETER TANK FILL FUNNEL TAPERING TO 80 MM DIAMETER WITH A FLANGED TOP RIM BOLTED INTO A 80 MM TALL BOSS ON THE TANK TOP. PROVIDE 80 MM STAINLESS STEEL PIPE SCREENS, RUN PIPING TO 80 MM ABOVE TANK BOTTOM.

(D) A FUNNEL TOP THREADED TO RECEIVE A SCREW-IN FUNNEL COVER REQUIRING NO MORE THAN THREE TURNS TO REMOVE/REPLACE.

(E) A FUNNEL COVER FITTED WITH 102 MM WIDE U-SHAPED HANDLE TO FACILITATE USE.

(F) A 80 MM PIPE EXTENDING FROM THE FUNNEL BOTTOM TO WITHIN 51 MM OF THE TANK BOTTOM.

Figure A-21C
AFFF Station

APPENDIX A (Continued)

NOTES (Continued):

(G) A PUMP SUCTION CONNECTION WITH A WELDING REDUCER HAVING ITS LARGER END WELDED FLUSH WITH THE BOTTOM OF THE TANK. THE INLET AREA HAVING NOTES APPROXIMATELY FOUR TIMES THE FLOW AREA OF THE SUCTION PIPING.

(H) TANK SHOULD BE CONSTRUCTED OF STAINLESS STEEL (SS 316).

(I) A BOLTED ACCESS PLATE WITH GASKET IN THE TANK SIDE TO ALLOW A MINIMUM OF 305 MM CLEARANCE FOR CLEANING.

7. TRAINER REQUIREMENTS:

19F1A HAS 1 FOAM STATION SERVING 2 FOAM REELS
19F3-B1 HAS 1 FOAM STATION SERVING 2 FOAM REELS
19F3-B3 HAS 1 FOAM STATION SERVING 1 FOAM REEL
19F3-B4 HAS 1 FOAM STATION SERVING 1 FOAM REEL 19F3A HAS 1 FOAM STATION SERVING 3 FOAM REELS (USE OF STD. COMM. FOAM PROPORTIONING EQUIPMENT WITH 4 FOAM REELS IS APPROVED).

8. MOTOR CONTROLLER: (NEMA 4 ENCLOSURE)

(A) SEE SHEET 4 FOR PHYSICAL REQUIREMENTS

(B) SWITCHES SHOULD BE APPROVED FOR WET LOCATIONS

9. MASTER SOPV

(A) USE 480 V SOLENOIDS

10. AFFF PIPING, VALVES AND FITTINGS SHOULD BE STAINLESS STEEL OR COPPER.

11. PUMP IS BLACKMER PUMP MODEL BXL-1-1/4 (MFG. DWG. NO. E-4638) WITH STD. ELECTRIC MOTOR (7-1/2 HP, TOTAL ENCLOSED FAN COOLED).

12. PROVIDE VIBRATION ISOLATORS FOR AFFF STATION SUPPORTS.

Figure A-21D
AFFF Station

APPENDIX A (Continued)

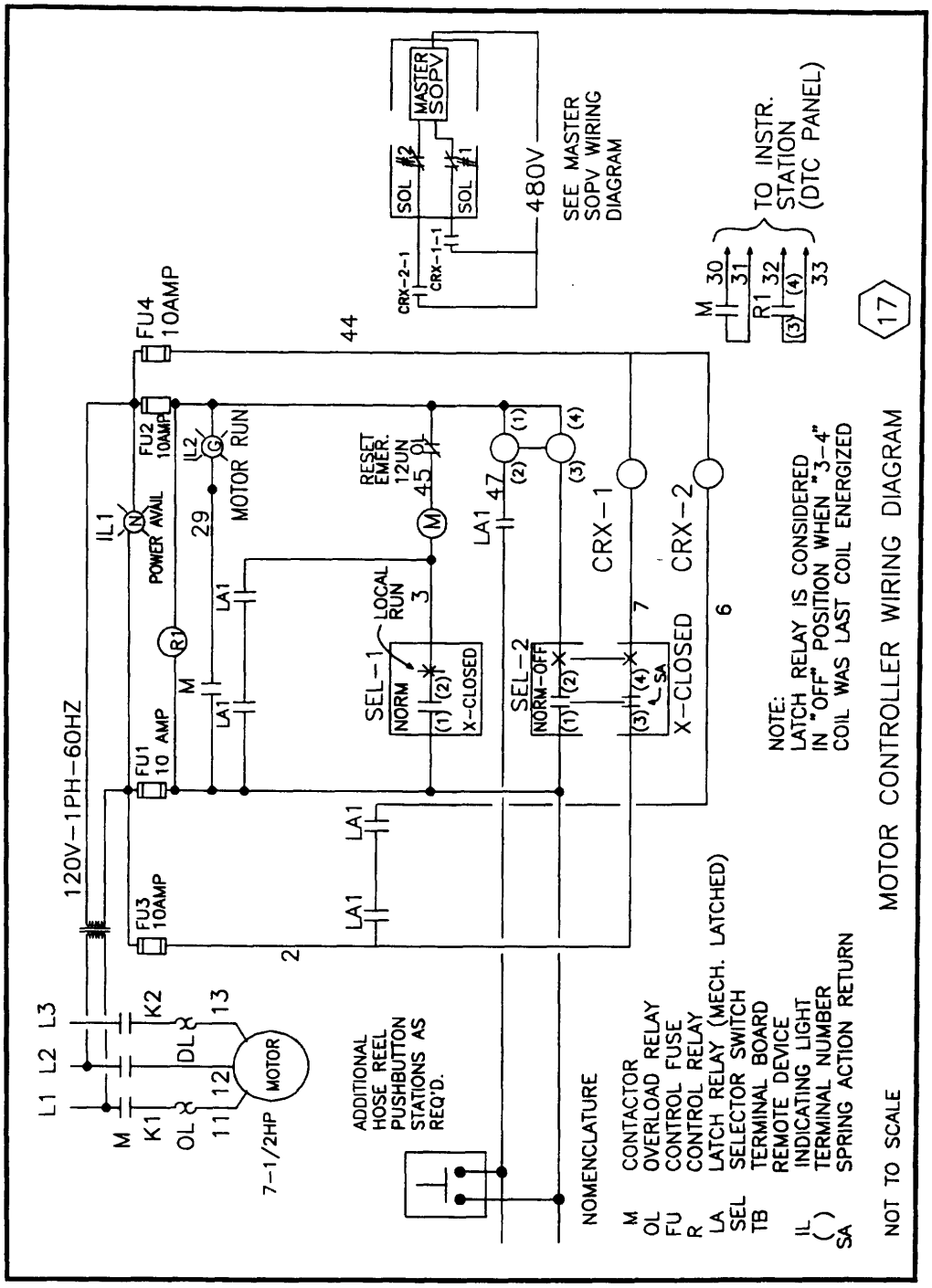

Figure A-21E
AFFF Station

APPENDIX A (Continued)

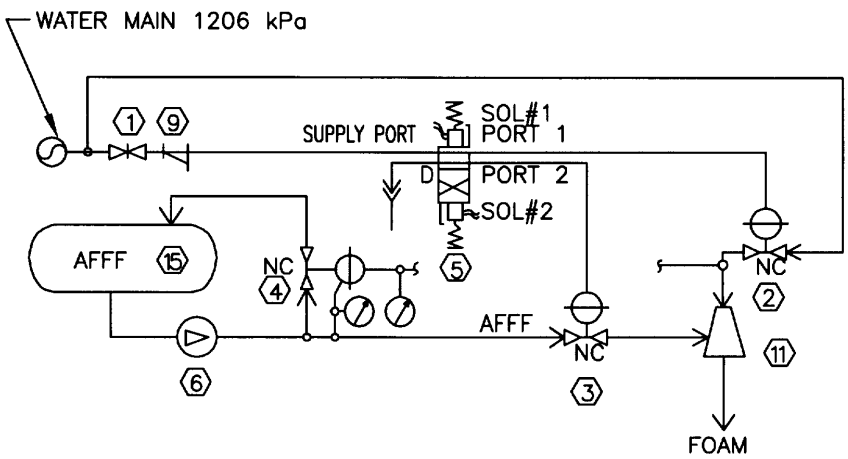

HYDRAULIC CONTROL DIAGRAM

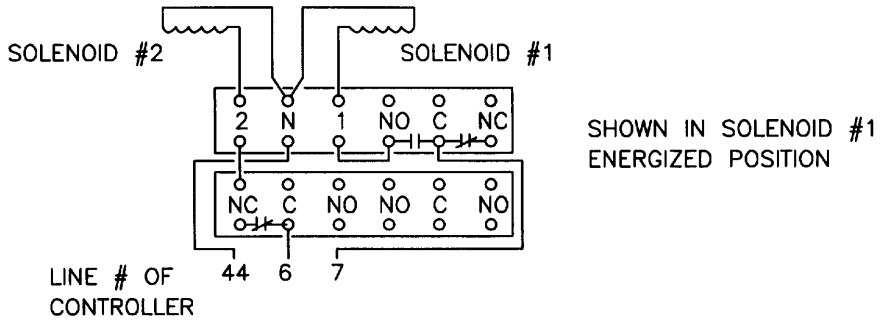

MASTER SOPV WIRING DIAGRAM 5
480V POWER

NOT TO SCALE

Figure A–21F
AFFF Station

APPENDIX A (Continued)

SEQUENCE OF OPERATION:

1. SUPPLY POWER TO MOTOR CONTROLLER CONTROL TRANSFORMER. THE WHITE POWER AVAILABLE LIGHT (IL 1) IS LIT. BOTH SELECTOR SWITCH ONE (SEL 1) AND SELECTOR SWITCH TWO (SEL 2) ARE IN "NORMAL" POSITION AND BOTH AFFF CONCENTRATE AND BACK PRESSURE GAGES SHOW NO PRESSURE.

2. IN NORMAL MODE BOTH SEL 1 AND SEL 2 SHOULD BE IN "NORMAL" POSITION, MASTER SOPV CONNECTS SUPPLY PORT TO PORT #2 WHICH SUPPLIES PRESSURE TO (2) WATER CONTROL VALVE (PRESSURE TO CLOSE) AND CONNECTS DRAIN PORT TO PORT #1 WHICH RELIEVES PRESSURE TO (3) AFFF CONCENTRATE DISCHARGE CONTROL VALVE (RELIEF TO CLOSE). (4) BACK PRESSURE REGULATING VALVE IS IN FULL RECIRCULATING MODE TO AFFF TANK.

3. TO START PUMP

A. LOCAL OPERATING MODE: PLACE "NORMAL/LOCAL RUN" SWITCH (SEL 1) IN THE LOCAL RUN POSITION THE PUMP WILL START AND GREEN MOTOR RUN LIGHT (IL 2) ON THE CONTROLLER IS LIT.

B. REMOTE OPERATING MODE ((7) HOSE STATION PUSHBUTTON): MOMENTARILY PUSH HOSE REEL PUSHBUTTON. THE PUMP WILL START AND GREEN MOTOR RUN LIGHT (IL 2) ON THE CONTROLLER IS LIT. IN ORDER TO ENERGIZE SOLENOID #2, MOMENTARILY PRESS THE PUSHBUTTON. THE PURPOSE OF THE LOCAL MODE IS TO ALLOW THE AFFF PUMPS TO RUN, READY FOR ACTION, WITHOUT INJECTING FOAM INTO THE WATER MAIN. WHEN THE FOAM REEL STATIONS ARE READY FOR FOAM, THE TRAINEE PRESSES THE REMOTE PUSHBUTTON.

4. WHEN PUMP IS RUNNING, THE MOTOR CONTROLLER ENERGIZES SOLENOID #2 OF THE (5) MASTER SOPV, WHICH CONNECTS SUPPLY PORT TO PORT #1 WHICH SUPPLIES PRESSURE TO (3) AFFF CONCENTRATE CONTROL VALVE WHICH GOES TO FULL OPEN POSITION AND CONNECTS DRAIN PORT TO PORT #2 WHICH RELIEVES PRESSURE TO (2) WATER CONTROL VALVE WHICH GOES TO FULL OPEN POSITION. SOLENOID #2 IS DEENERGIZED AT THE END OF ITS STROKE.

5. THE (4) BACK PRESSURE REGULATING VALVE SHOULD SELF REGULATE SO THAT THE PRESSURE OF THE AFFF CONCENTRATE IS EQUAL TO THE WATER AT THE FLOW PROPORTIONER.

Figure A-21G
AFFF Station

APPENDIX A (Continued)

SEQUENCE OF OPERATION (CONTINUED):

6. TO STOP PUMP

A. LOCAL OPERATING MODE:

(1) PLACE "NORMAL/LOCAL RUN" SWITCH (SEL 1) TO "NORMAL" POSITION.

(2) MOMENTARILY PLACE "NORMAL/OFF" SWITCH (SEL 2) TO "OFF" POSITION. TO ENERGIZE SOLENOID #1 TO CLOSE (3) AFFF CONCENTRATE VALVE AND (2) WATER CONTROL VALVE, AND RESET LATCH RELAY.

B. REMOTE OPERATING MODE:

(1) MOMENTARILY PLACE "NORMAL/OFF" SWITCH TO "OFF" POSITION TO ENERGIZE SOLENOID #1 TO CLOSE (3) AFFF CONCENTRATE VALVE AND (2) WATER CONTROL VALVE AND RESET LATCH RELAY.

Figure A-21H
AFFF Station

APPENDIX A (Continued)

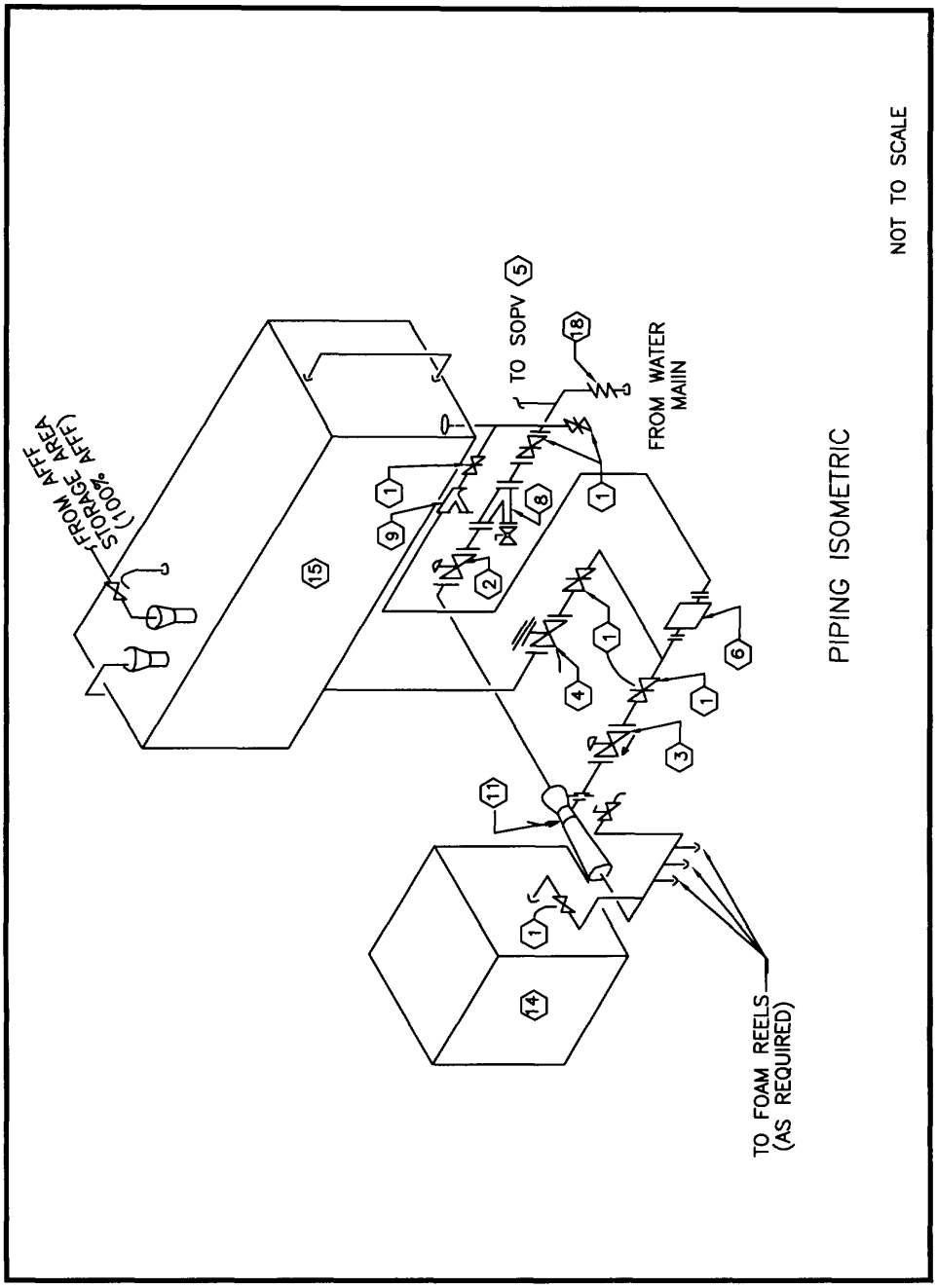

Figure A-21I
AFFF Station

APPENDIX A (Continued)

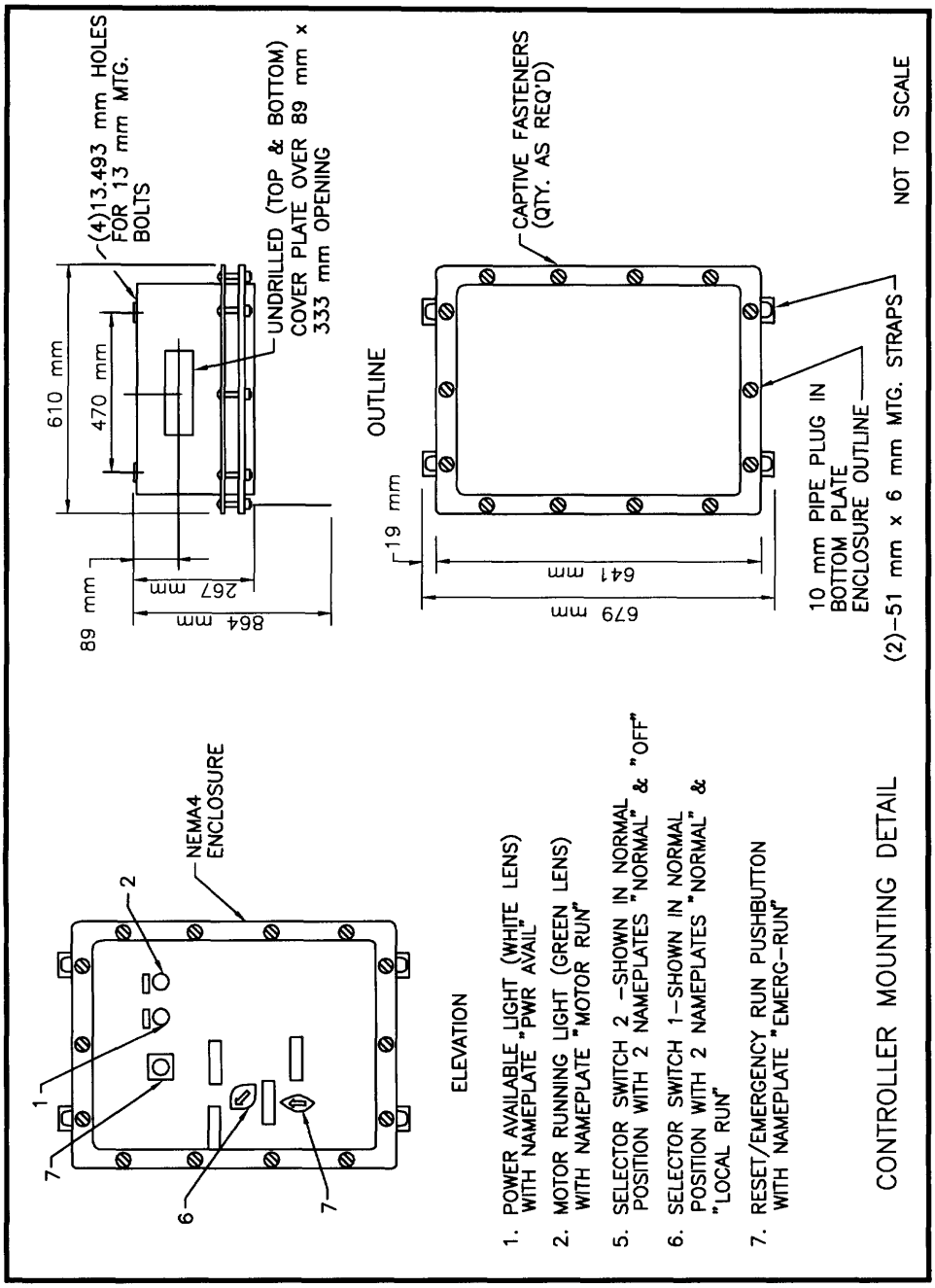

Figure A-21J
AFFF Station

APPENDIX A (Continued)

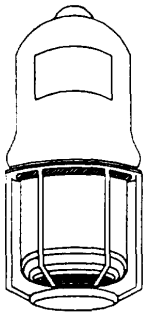

TYPE 1 & 2

LUMINAIRE REQUIREMENTS

1. LUMINAIRE SHALL MEET U.L. 844 OR FACTORY MUTUAL (FM) STANDARD FOR HAZARDOUS LOCATIONS.

2. LUMINAIRE SHALL MEET U.L. 595 FOR MARINE LOCATIONS.

3. HOUSING SHALL BE COPPER FREE CAST ALUMINUM WITH LACQUER OR EPOXY FINISH.

4. ALL JOINTS SHALL BE OF THE THREADED TYPE.

5. HEAT AND IMPACT RESISTANT PRESTRESSED GLASS GLOBE.

6. PROVIDE GLOBE GUARD INDICATED.

7. PROVIDE LAMPS AS INDICATED.

8. MOUNTING AS INDICATED.

9. PROVIDE INTERNAL GREEN GROUNDING SCREW.

TYPE 1 TWO 9 WATT COMPACT FLURESCENT LUMINIRES RATED FOR CLASS 1 DIVISION 2 GRUOP D ATOSHPHERE.

TYPE 2 70-250WATT HPS OR 175-400 WATT MET. HALIDE LUMINAIRE RATED FOR CLASS 1 DIVISON 2 GROUP D ATOSHPHERE.

Figure A-22

Luminaire, Type 1 & 2

APPENDIX B
19F1A AND 19F1B STRUCTURES

19F1A/19F1B	Isometric	B-1
19F1A/19F1B	Staging Area Plan	B-2
19F1A/19F1B	Second Floor Plan	B-3
19F1A/19F1B	First Floor Plan	B-4
19F1A/19F1B	Sections	B-5

APPENDIX B (Continued)

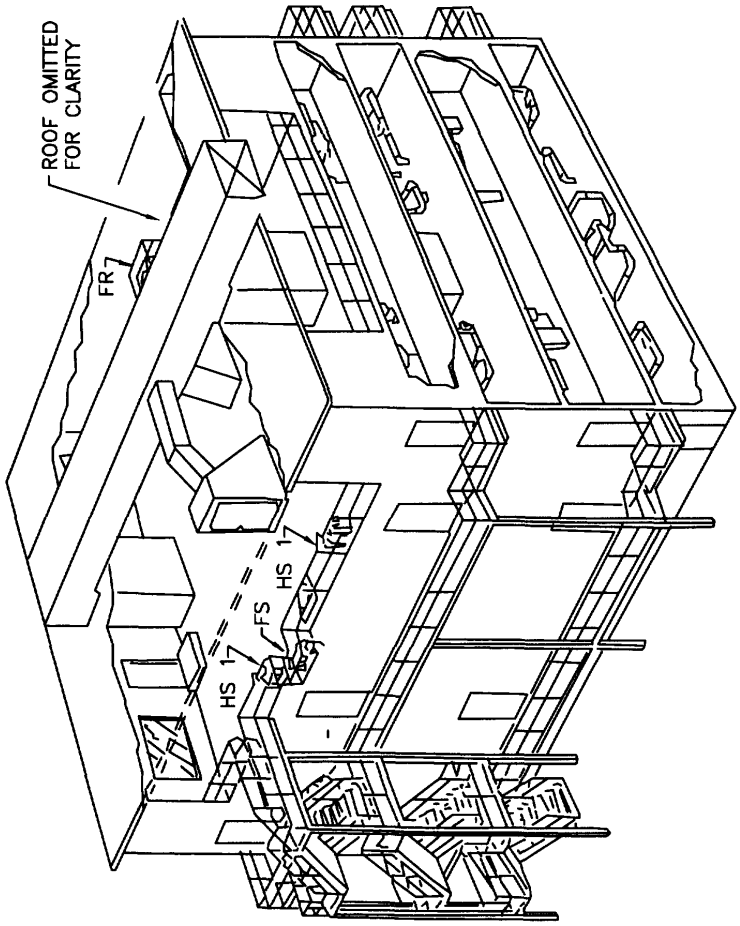

Figure B–1
19F1A/19F1B Isometric

APPENDIX B (Continued)

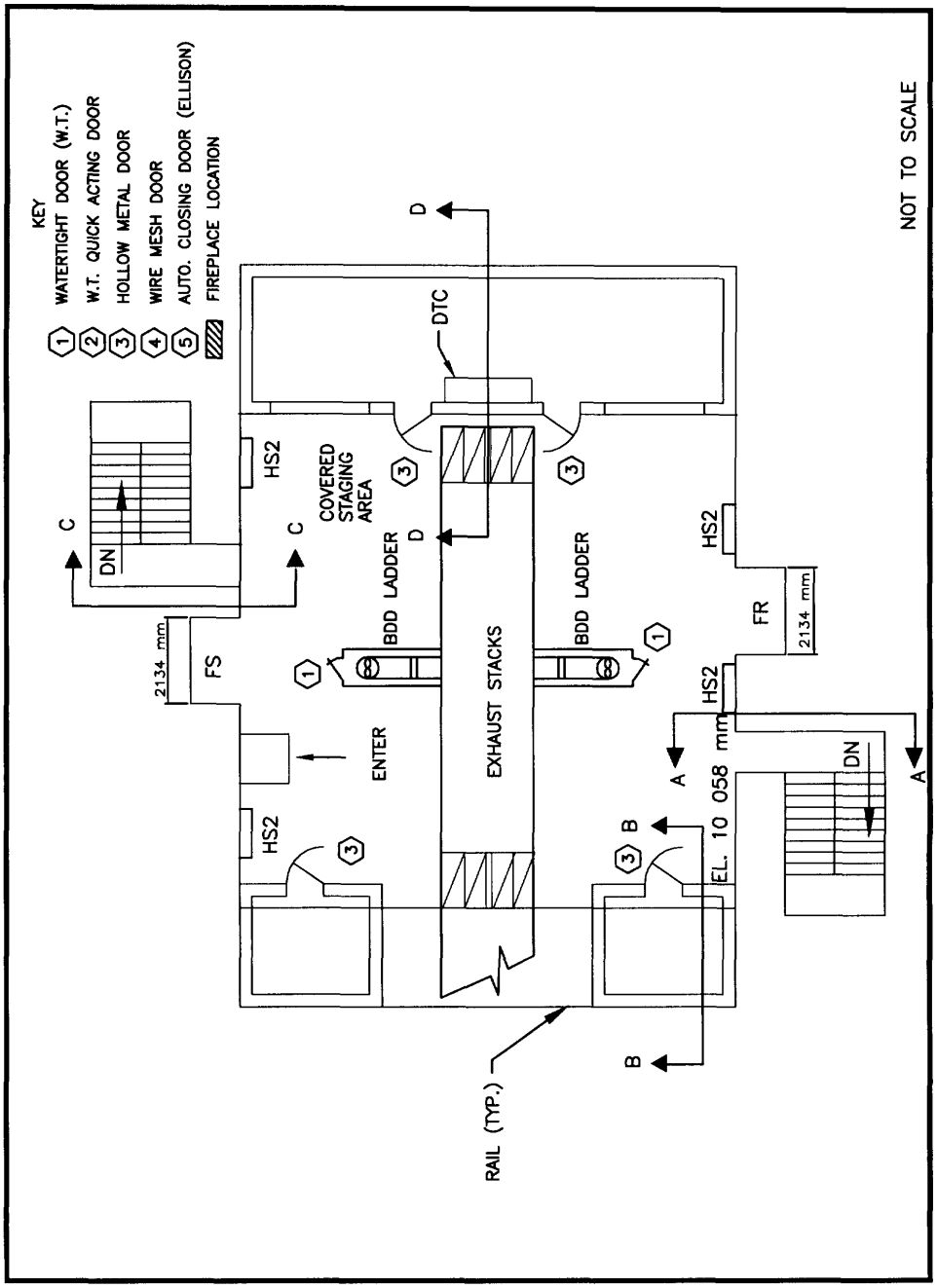

Figure B–2
19F1A/19F1B Staging Area Plan

APPENDIX B (Continued)

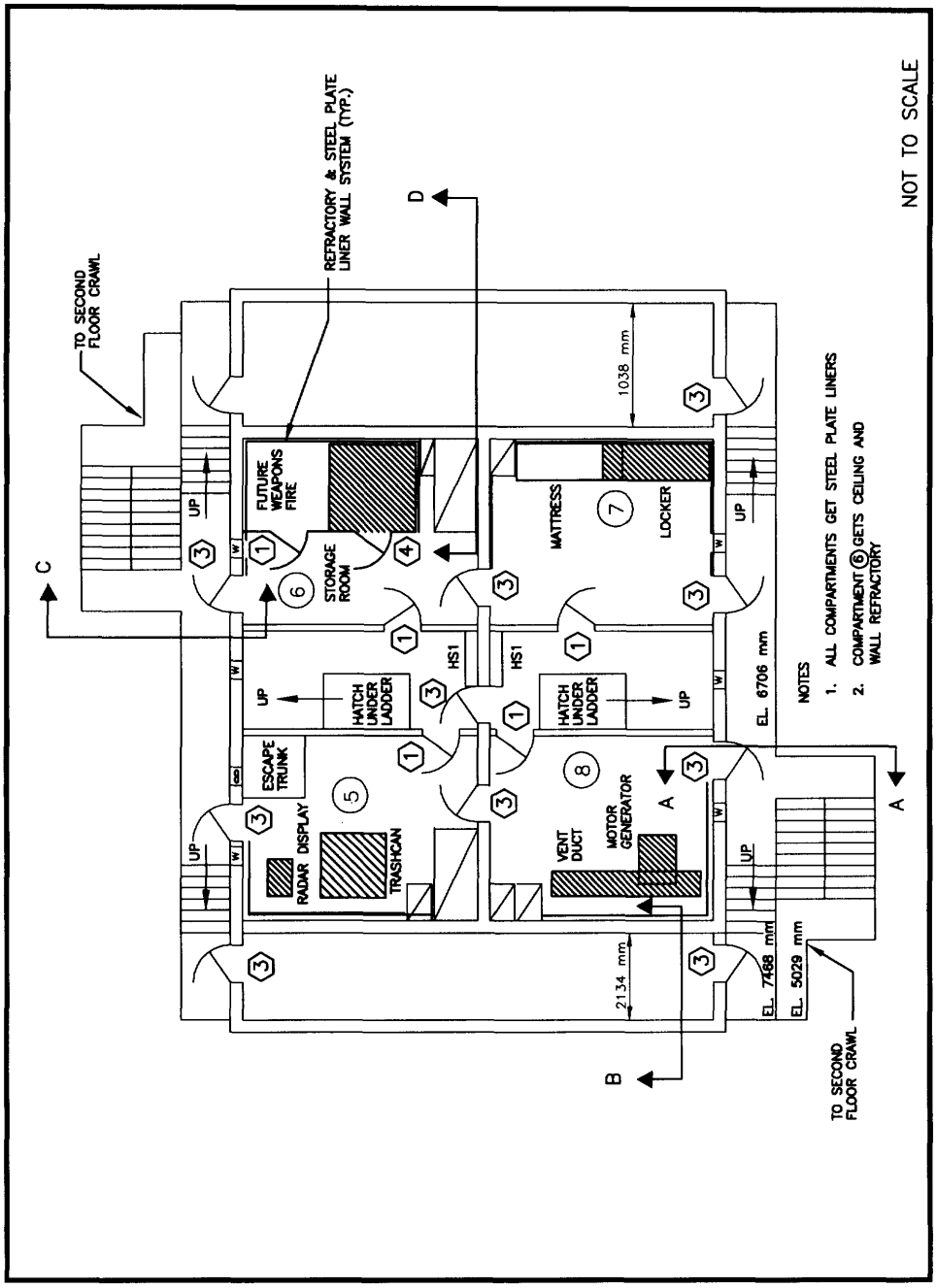

Figure B–3
19F1A/19F1B Second Floor Plan

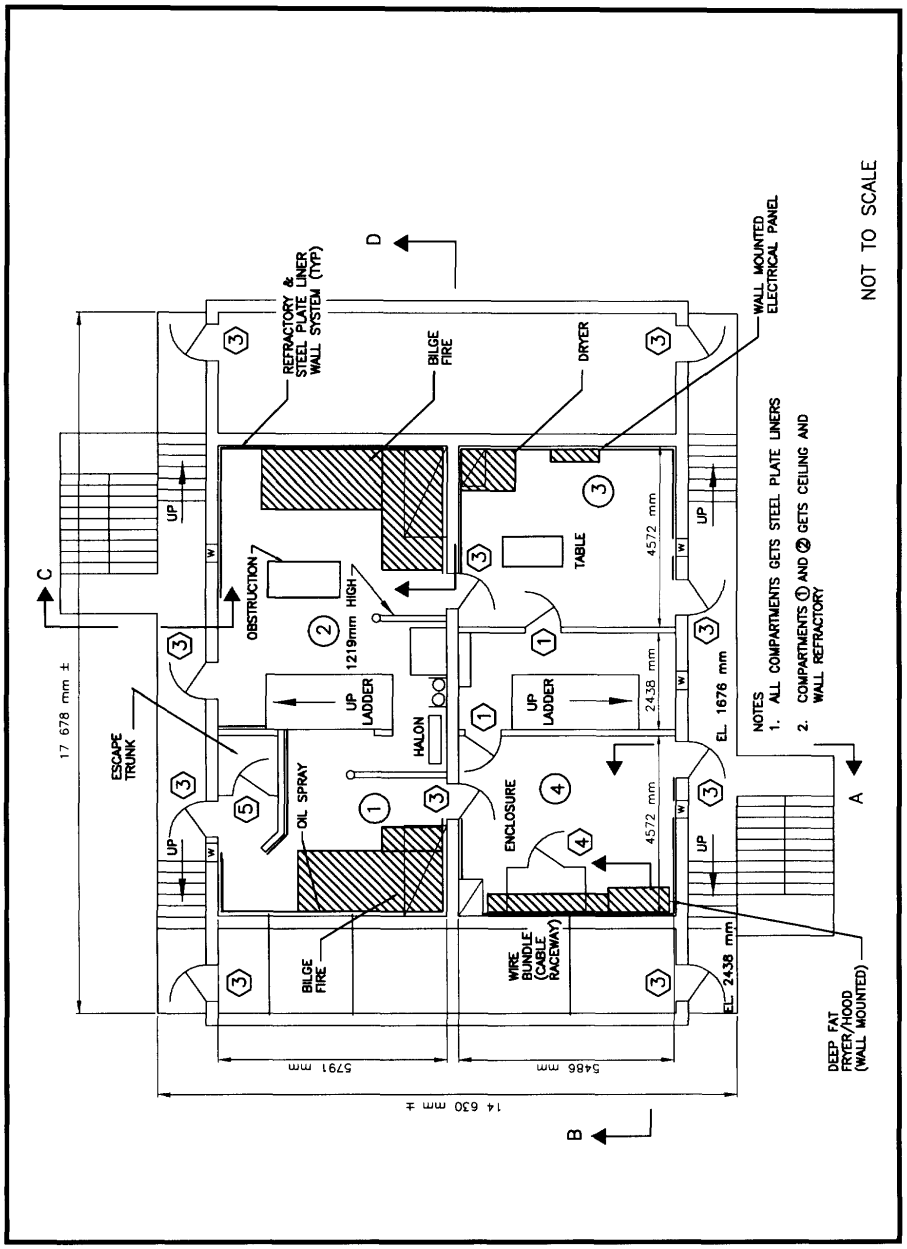

Figure B–4
19F1A/19F1B First Floor Plan

APPENDIX B (Continued)

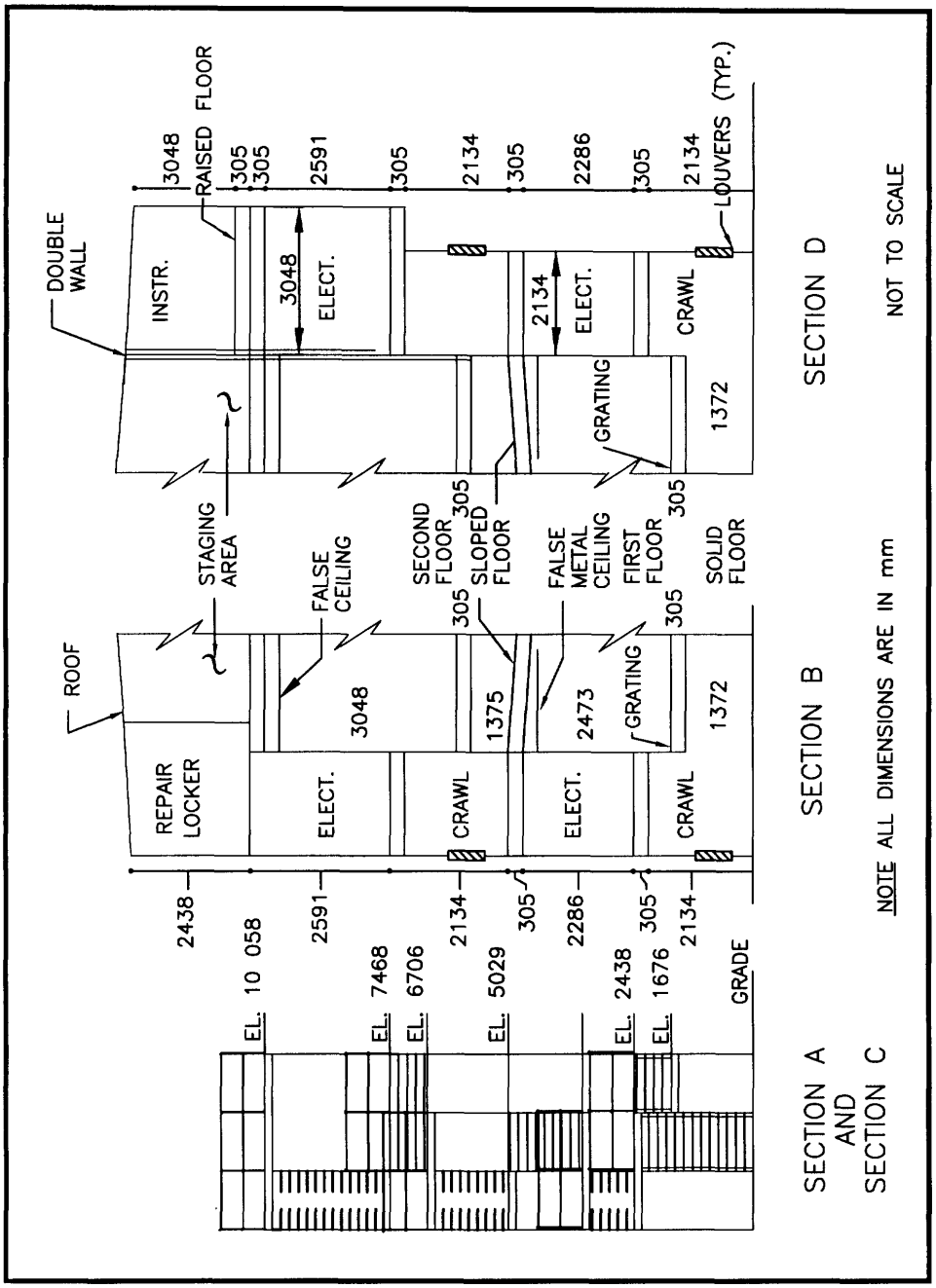

Figure B–5
19F1A/19F1B Sections

APPENDIX C
19F3 AND 19F3B STRUCTURES

19F3/19F3B	B1 Bilge Fire Building Roof Plan	C-1
19F3/19F3B	B1 First Floor Plan	C-2
19F3/19F3B	Galley/Berthing Building, B2, First Floor Plan	C-3
19F3/19F3B	Pit Fire Building, B3 and B4, First Floor Plan	C-4
19F3/19F3B	B1 Sections	C-5
19F3/19F3B	B2 Section	C-6
19F3/19F3B	B3/B4 Section	C-7

APPENDIX C (Continued)

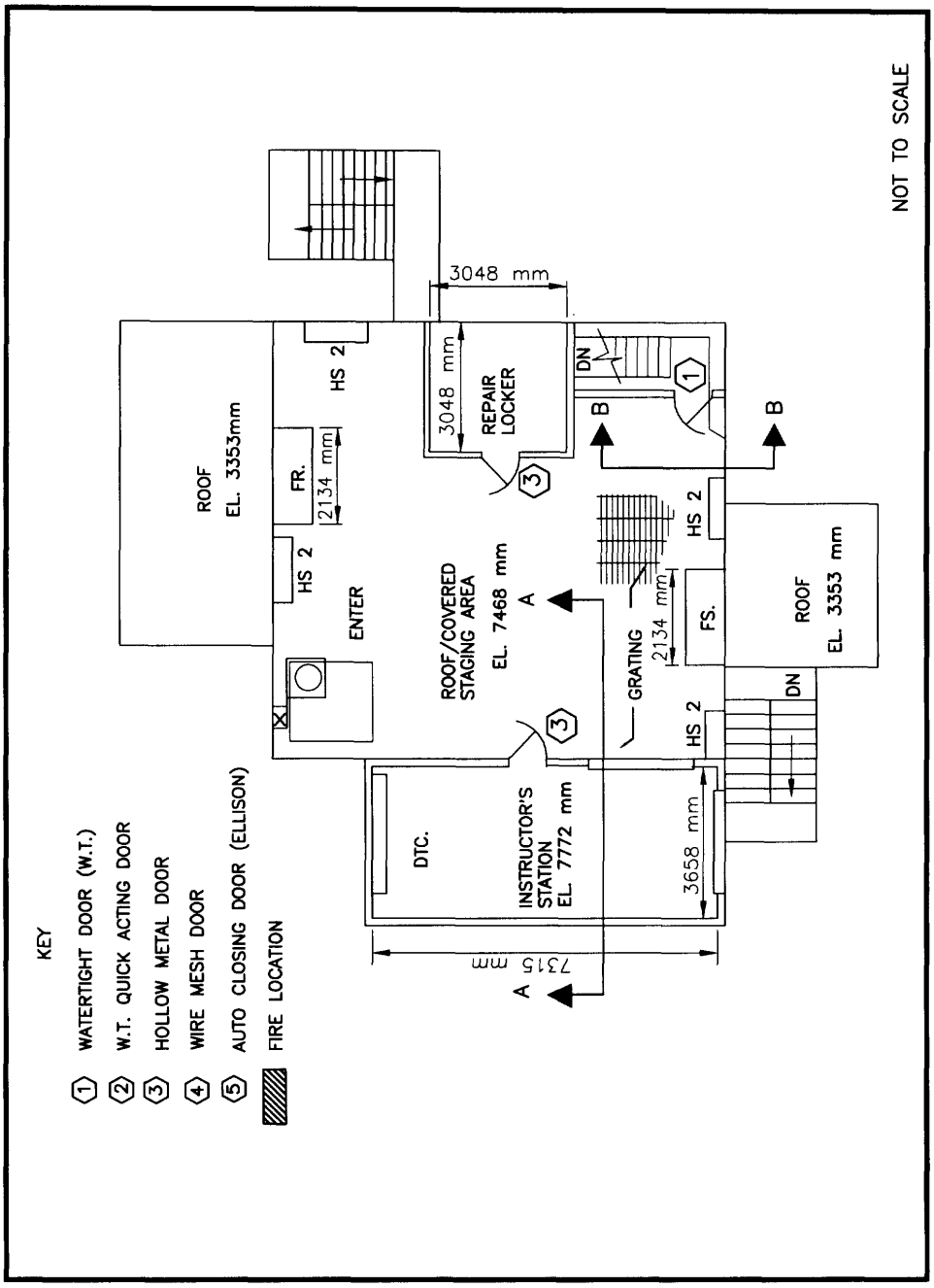

Figure C–1

19F3/19F3B B–1 Bilge Fire Building Roof Plan

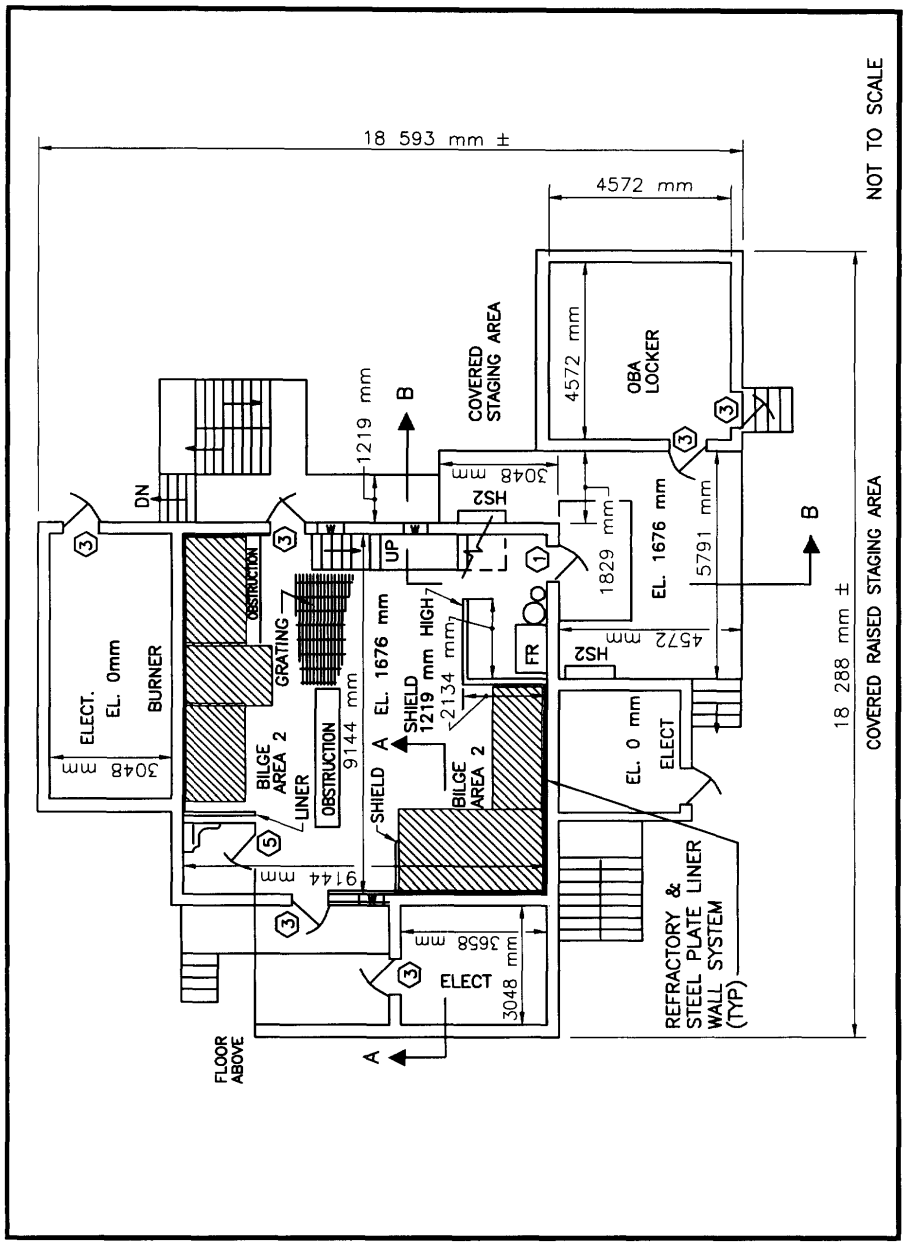

Figure C–2

19F3/19F3B B–1 First Floor Plan

APPENDIX C (Continued)

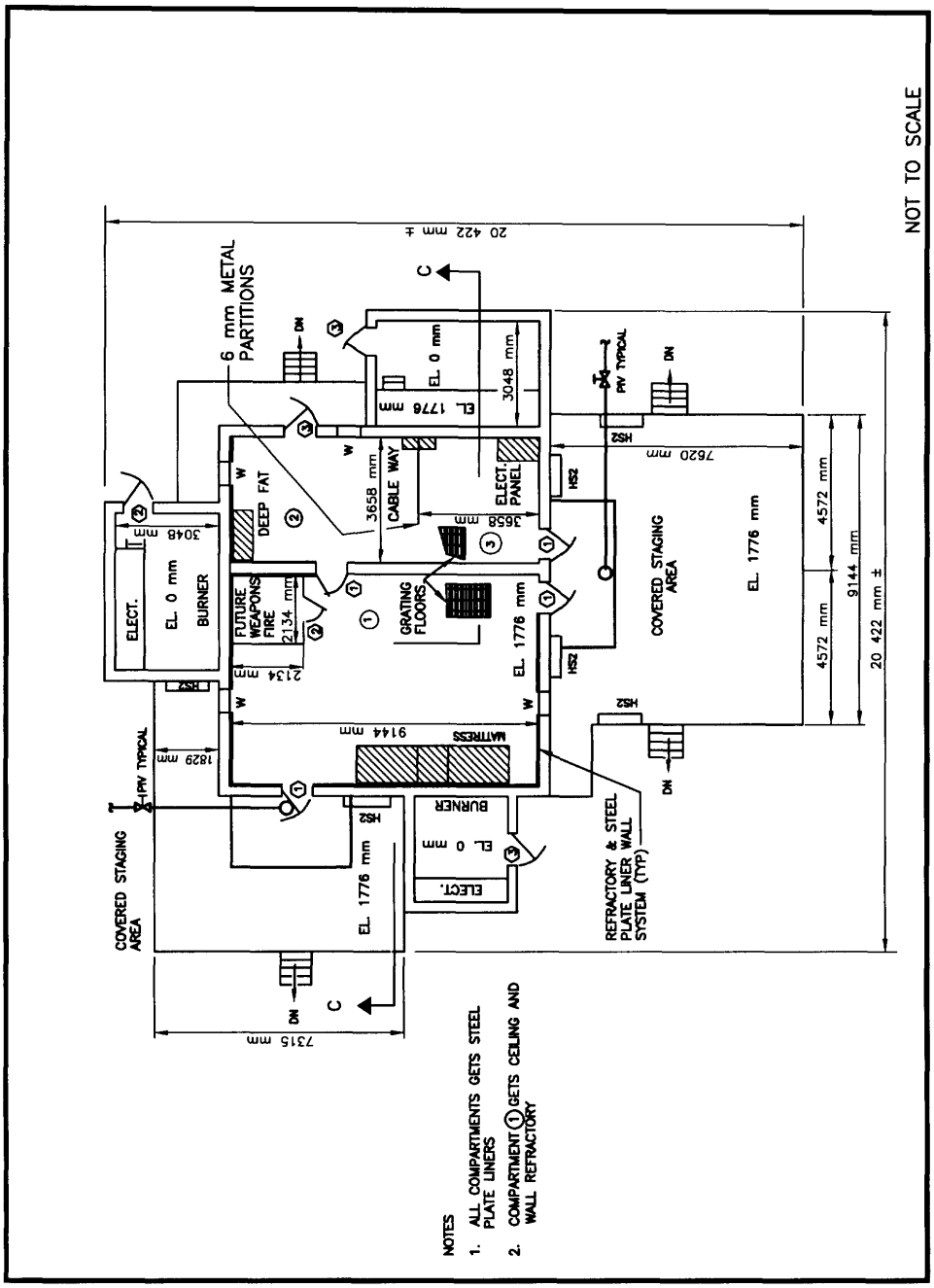

Figure C–3

19F3/19F3B Galley/Berthing Building B2 First Floor Plan

APPENDIX C (Continued)

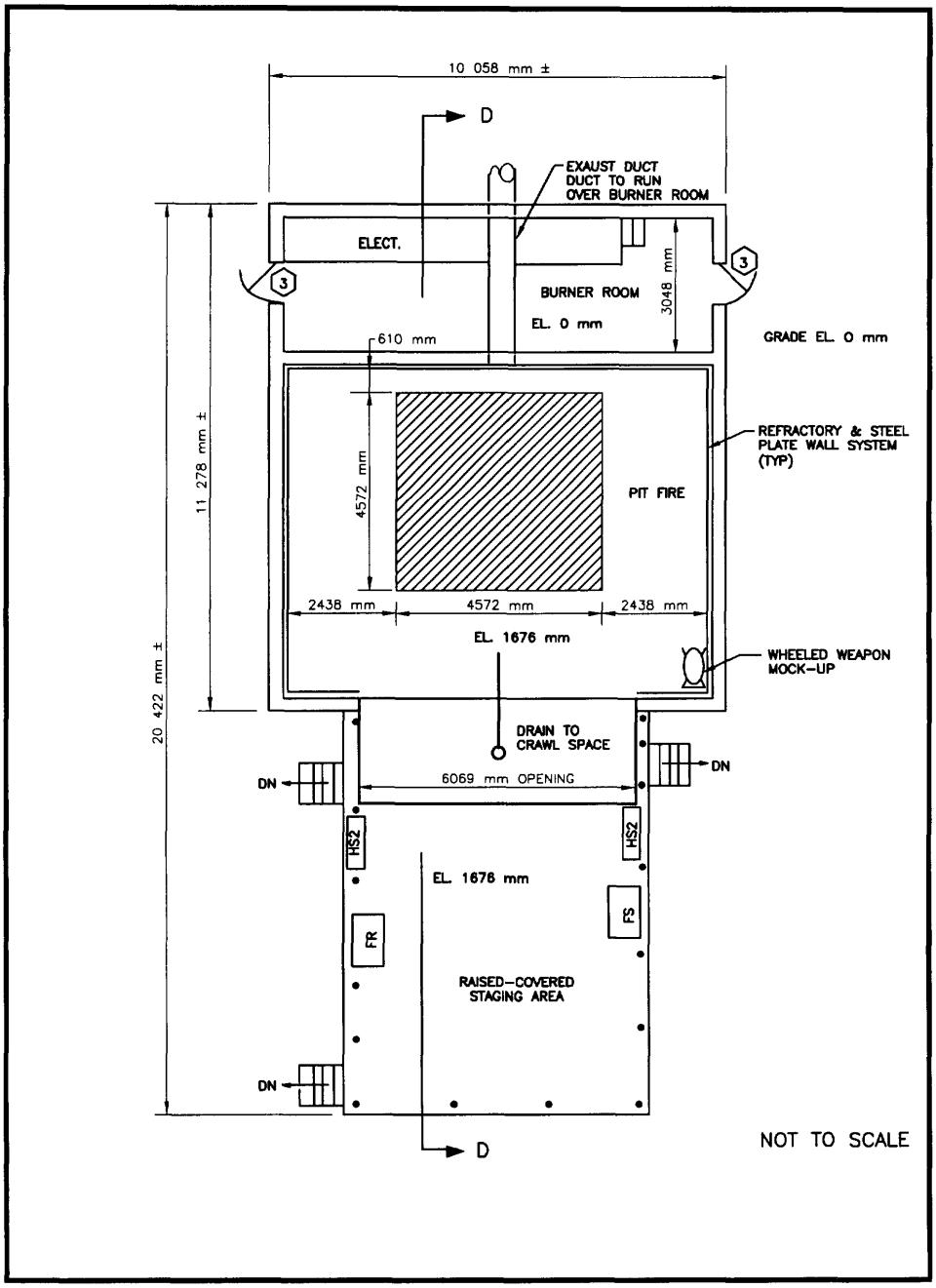

Figure C-4

19F3/19F3B Pit Fire Building
B3 & B4 First Floor Plan

APPENDIX C (Continued)

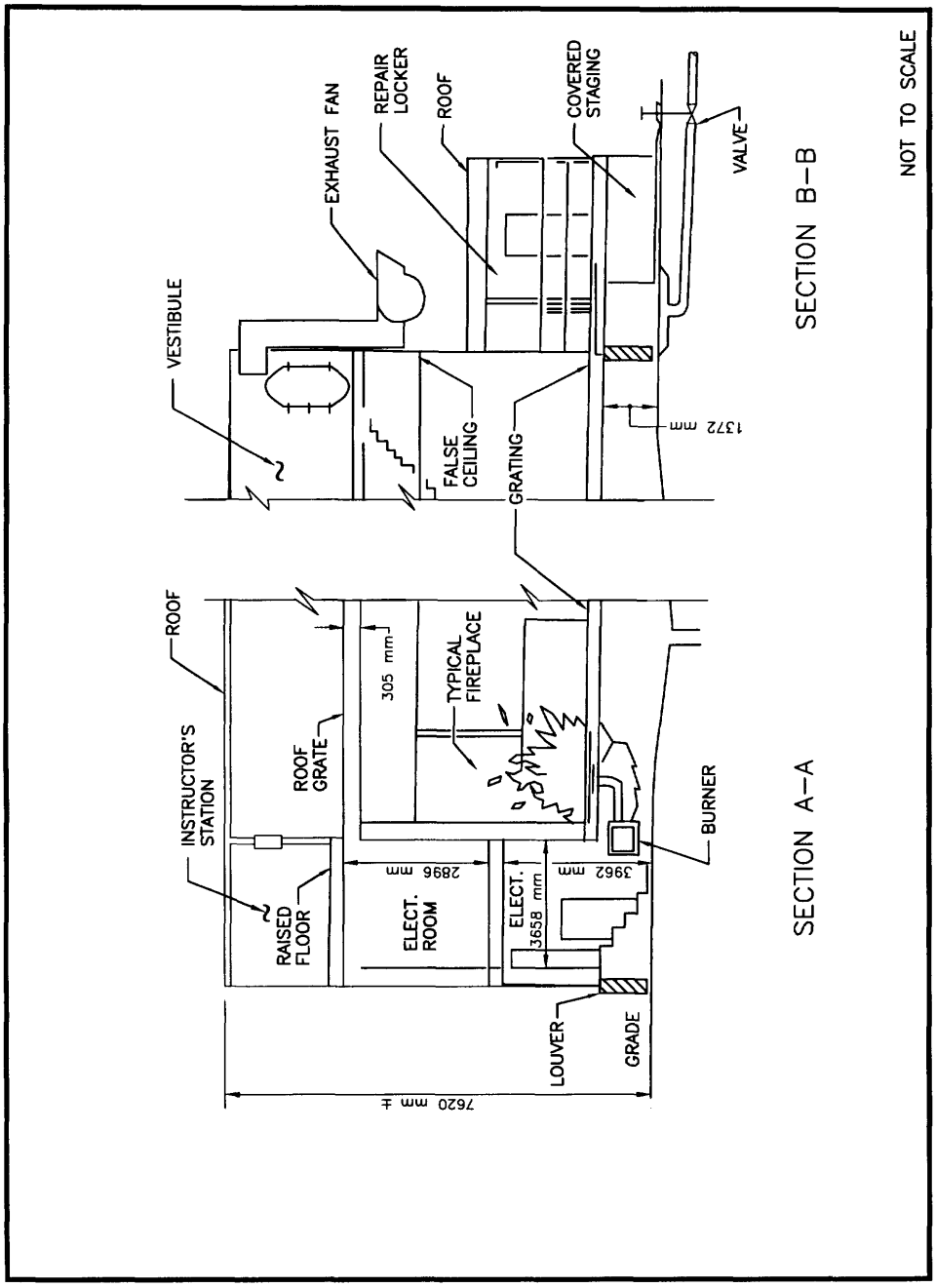

Figure C–5
19F3/19F3B B1 Sections

APPENDIX C (Continued)

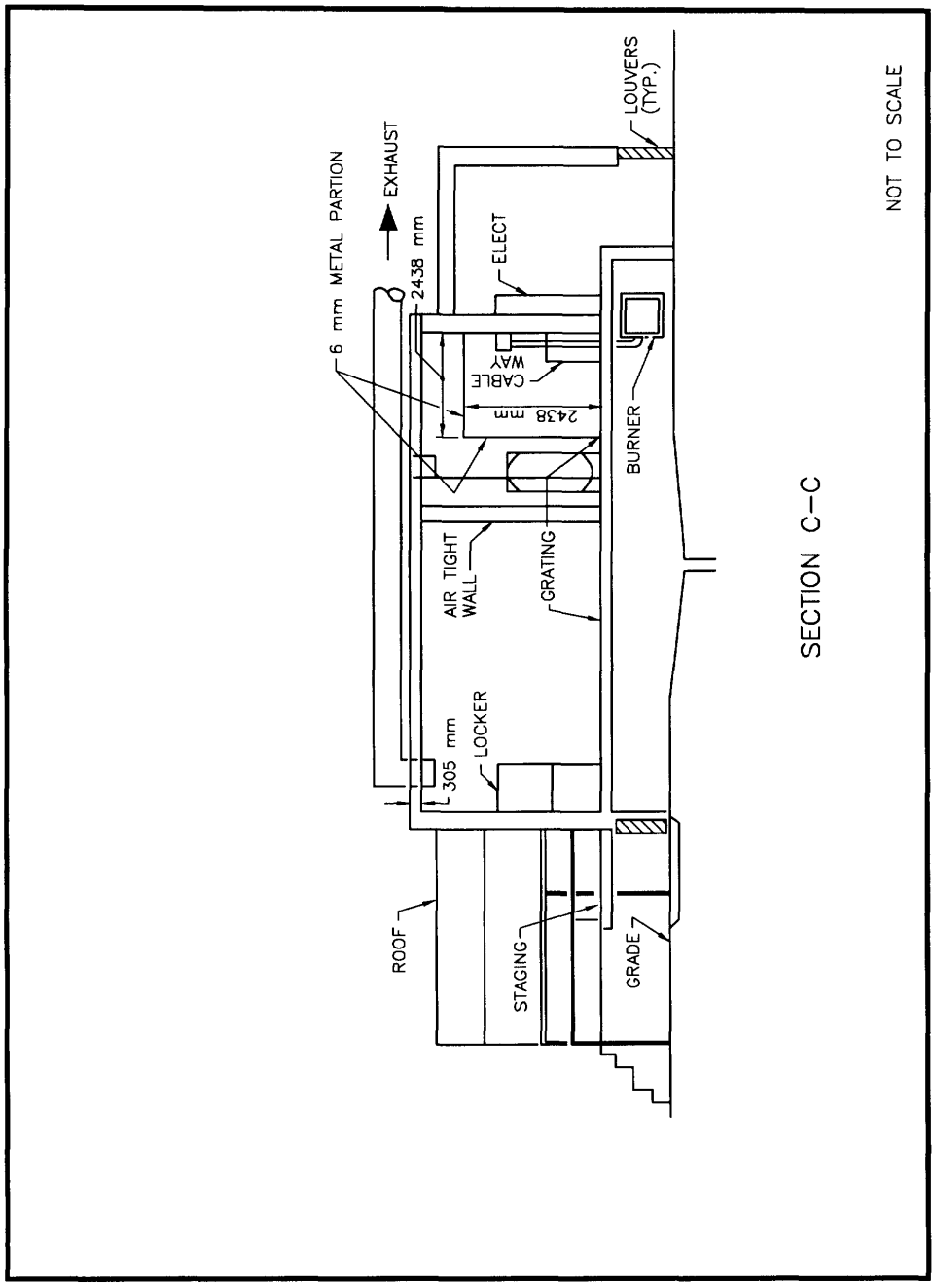

Figure C–6
19F3/19F3B B2 Section

APPENDIX C (Continued)

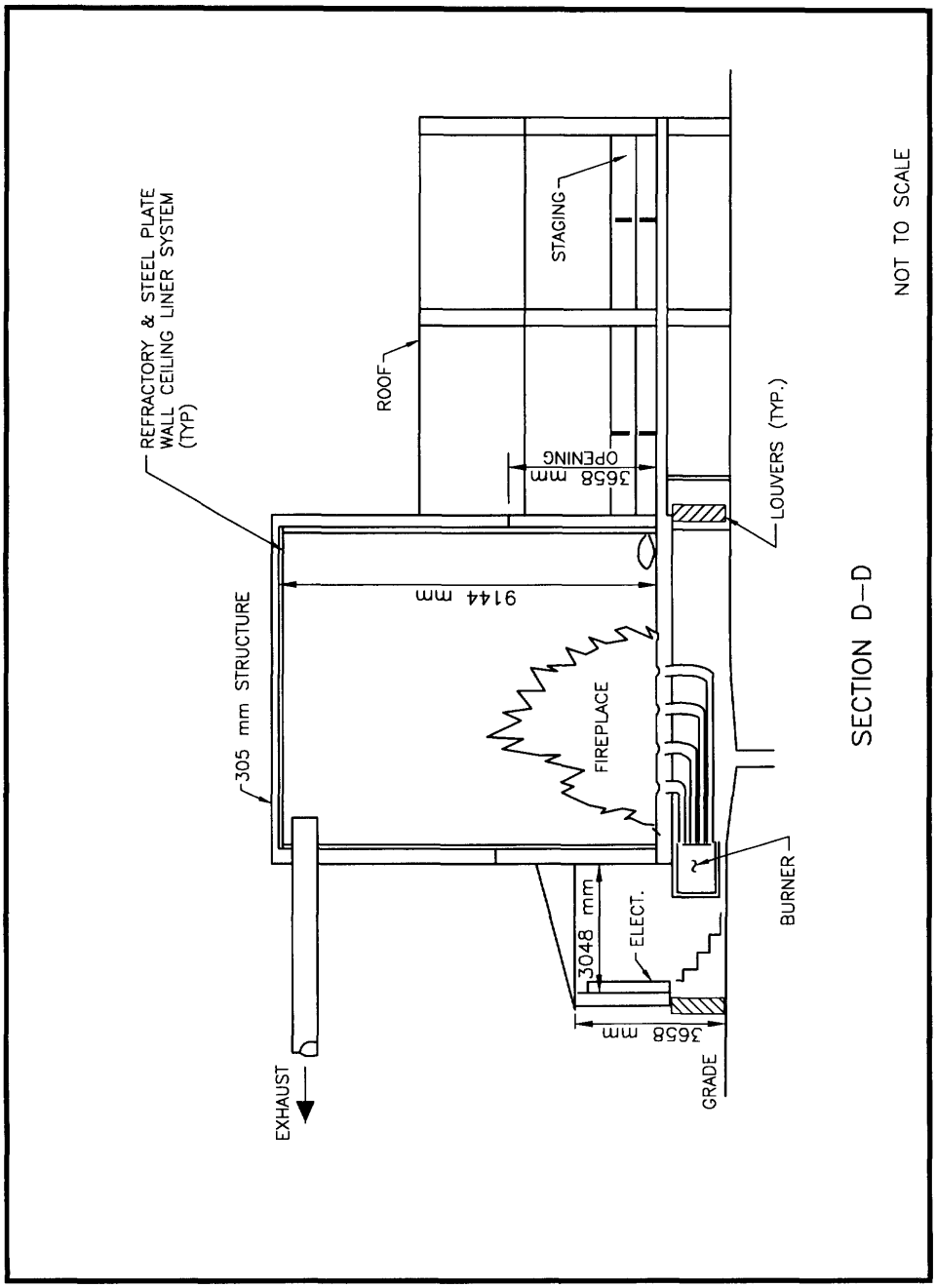

Figure C–7
19F3/19F3B B3/B4 Section

APPENDIX D
19F3A AND 19F3C STRUCTURES

19F3A/19F3C	First Floor Plan	D-1
19F3A/19F3C	Second Floor Plan	D-2
19F3A/19F3C	Roof Plan	D-3
19F3A/19F3C	Elevation	D-4

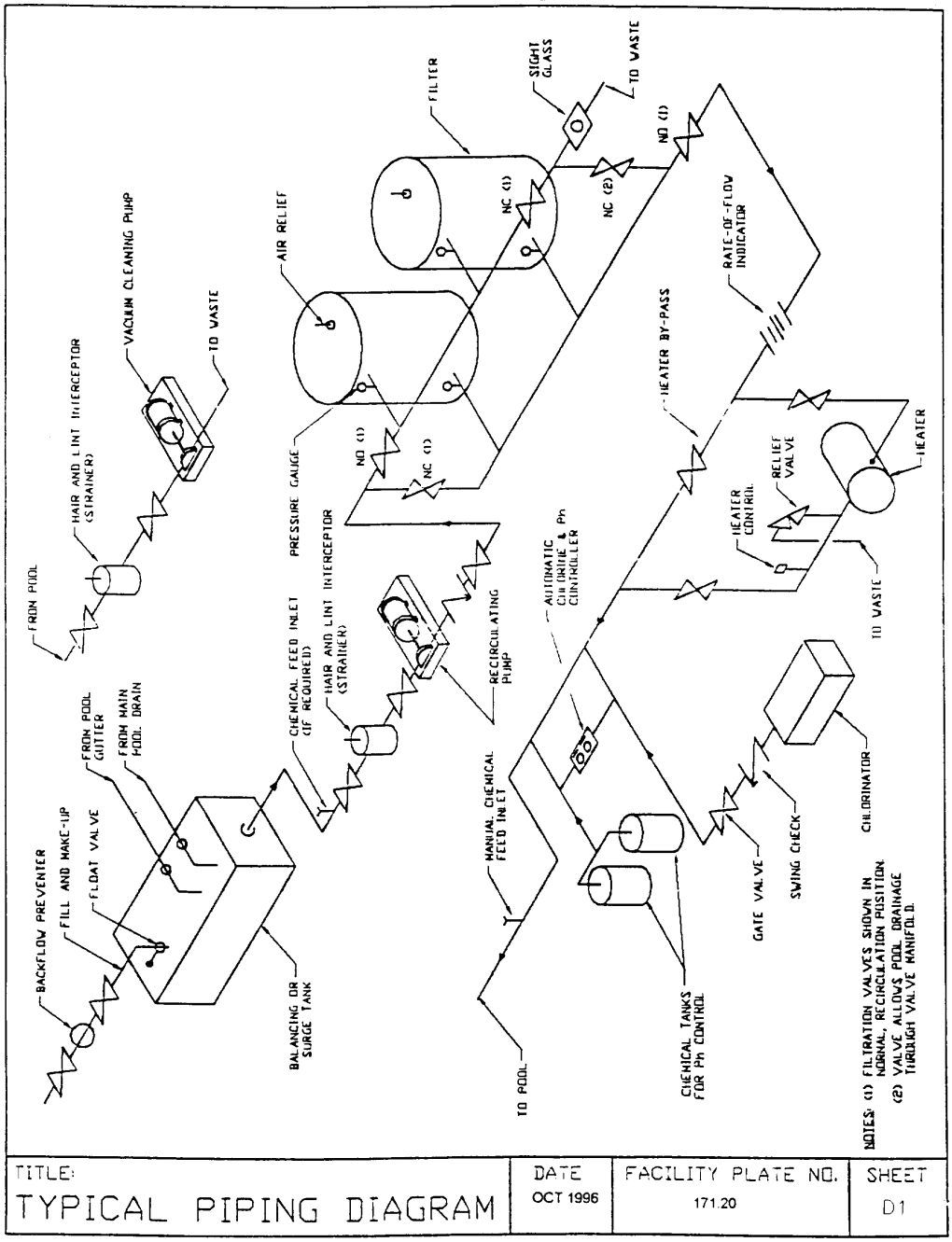
FROM POOL
HAIR AND LINT INTERCEPTOR (STRAINER)
VACUUM CLEANING PUMP
TO WASTE
BACKFLOW PREVENTER
FILL AND MAKE-UP
FLOAT VALVE
FROM POOL GUTTER
FROM MAIN POOL DRAIN
BALANCING OR SURGE TANK
CHEMICAL FEED INLET (IF REQUIRED)
HAIR AND LINT INTERCEPTOR (STRAINER)
PRESSURE GAUGE
AIR RELIEF
NO (1)
NC (1)
RECIRCULATING PUMP
FILTER
NC (1)
SIGHT GLASS
TO WASTE
NC (2)
NO (1)
AUTOMATIC CHLORINE & Ph CONTROLLER
MANUAL CHEMICAL FEED INLET
TO POOL
CHEMICAL TANKS FOR Ph CONTROL
HEATER BY-PASS
RATE-OF-FLOW INDICATOR
HEATER CONTROL
RELIEF VALVE
HEATER
TO WASTE
GATE VALVE
SWING CHECK
CHLORINATOR
NOTES: (1) FILTRATION VALVES SHOWN IN NORMAL, RECIRCULATION POSITION.
(2) VALVE ALLOWS POOL DRAINAGE THROUGH VALVE MANIFOLD.
TITLE:
TYPICAL PIPING DIAGRAM
DATE
OCT 1996
FACILITY PLATE NO.
171.20
SHEET
D1

APPENDIX D (Continued)

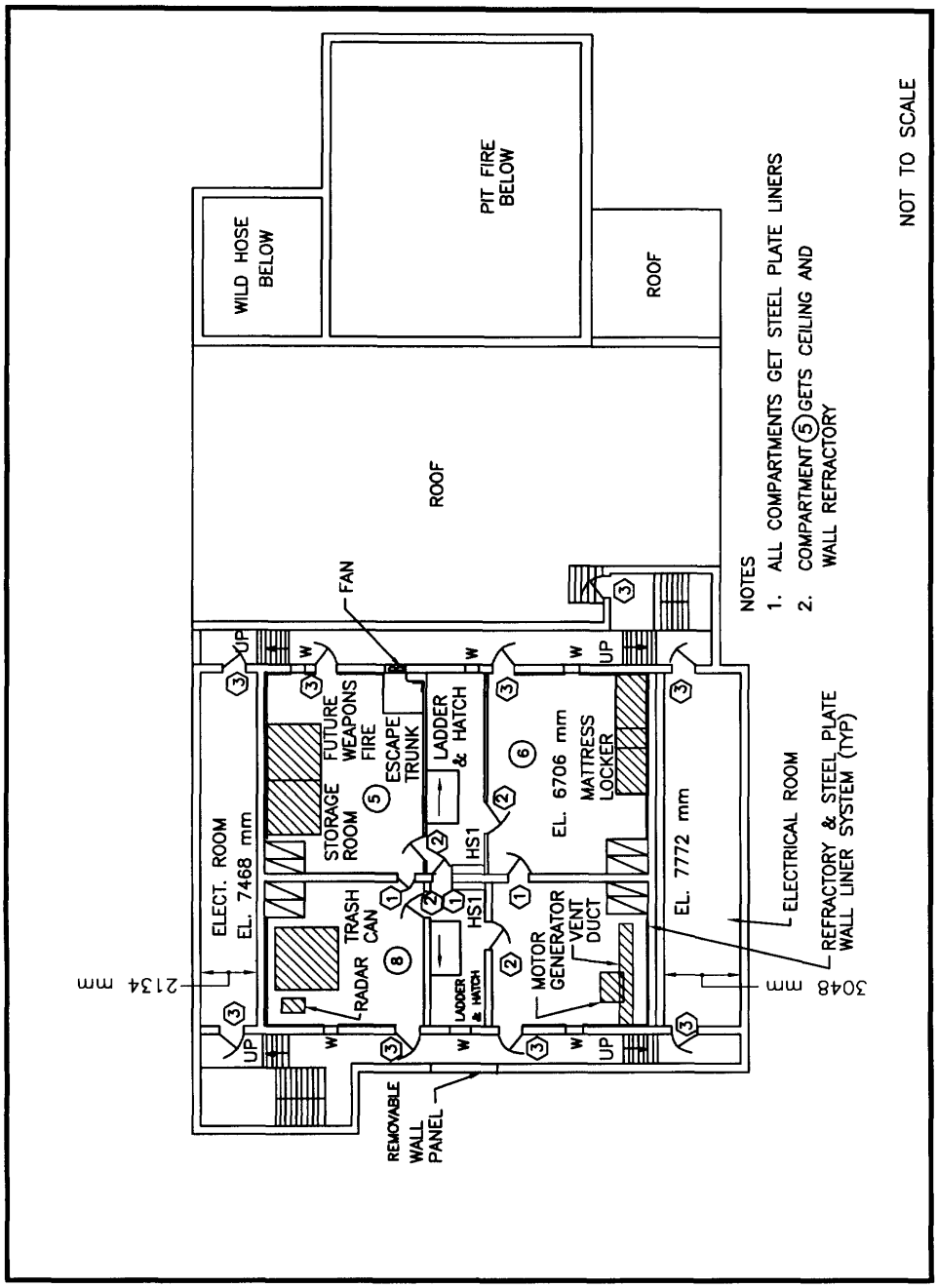

Figure D–2
19F3A/19F3C Second Floor Plan

APPENDIX D (Continued)

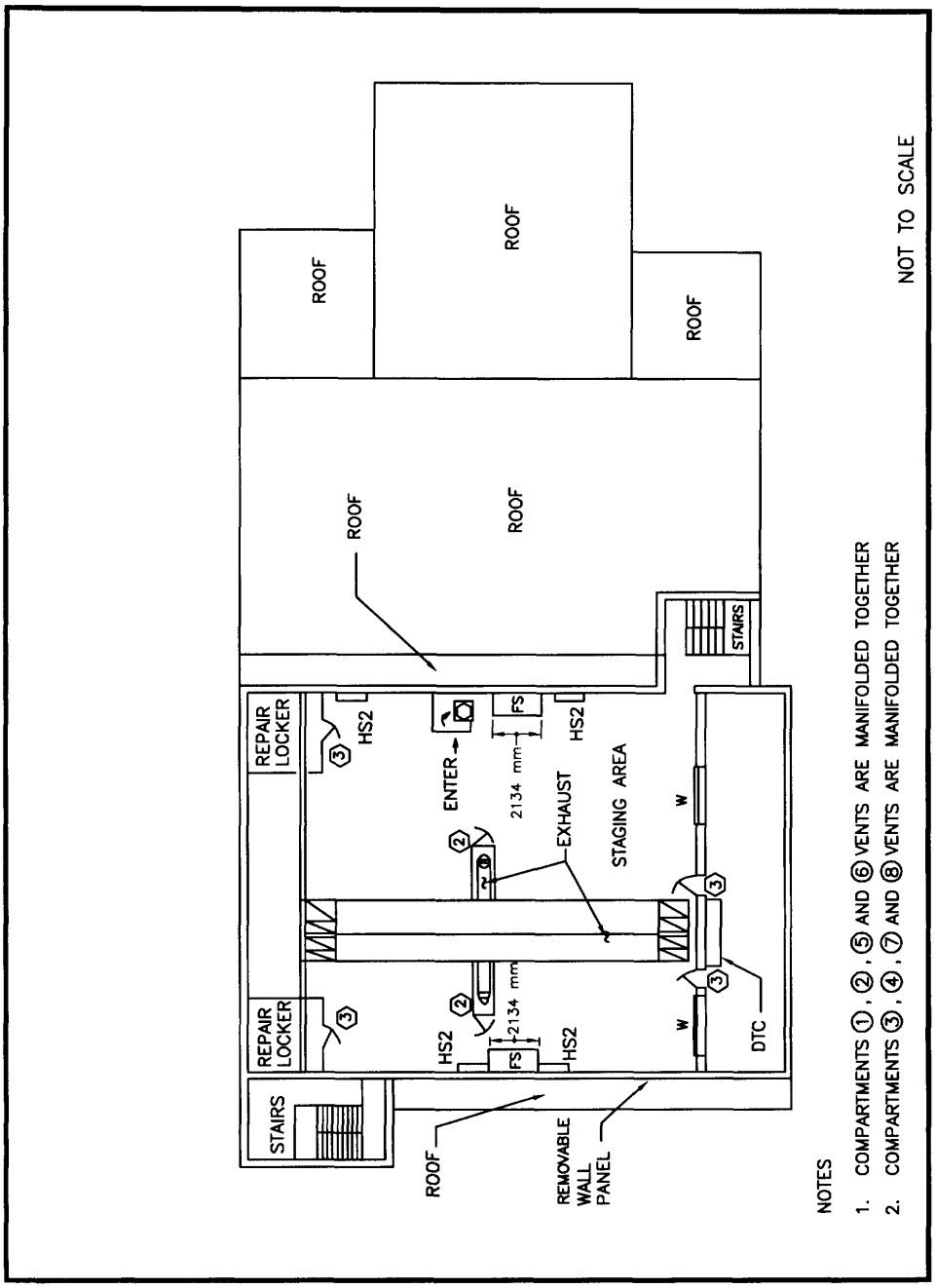

Figure D–3
19F3A/19F3C Roof Plan

APPENDIX D (Continued)

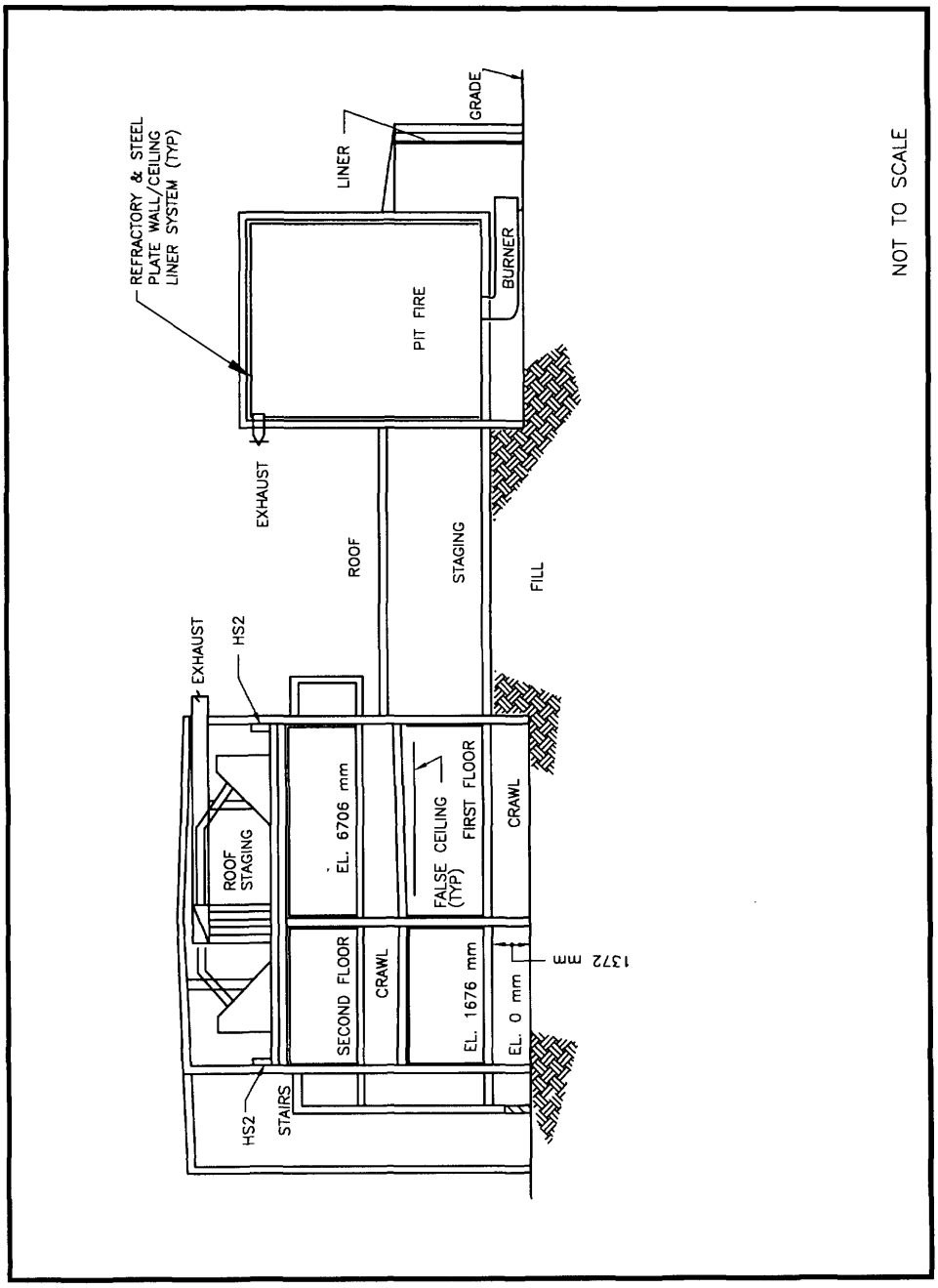

Figure D–4
19F3A/19F3C Elevation

APPENDIX E
19F4 AND 19F4A STRUCTURES

19F4/19F4A	Training Deck Floor Plan	E-1
19F4/19F4A	Elevation	E-2
19F4/19F4A	Foam Deck	E-3
19F4/19F4A	AFFF Balanced Pressure Proportioning System	E-4
19F4/19F4A	Training and Foam Deck Railing	E-5
19F4/19F4A	Crawl Space Plan and Pedestal	E-6

APPENDIX E (Continued)

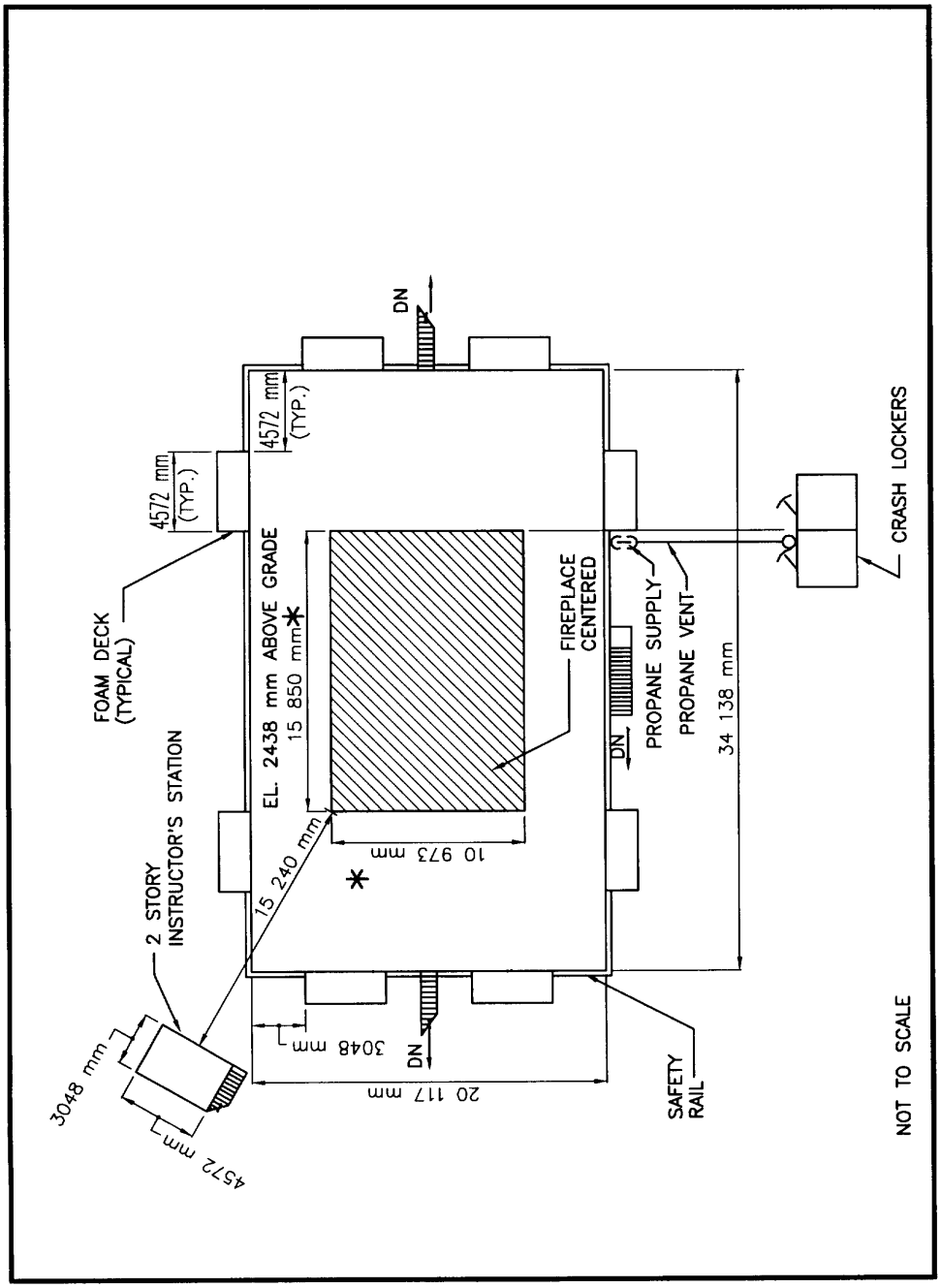

Figure E–1
19F4/19F4A Training Deck Floor Plan

APPENDIX E (Continued)

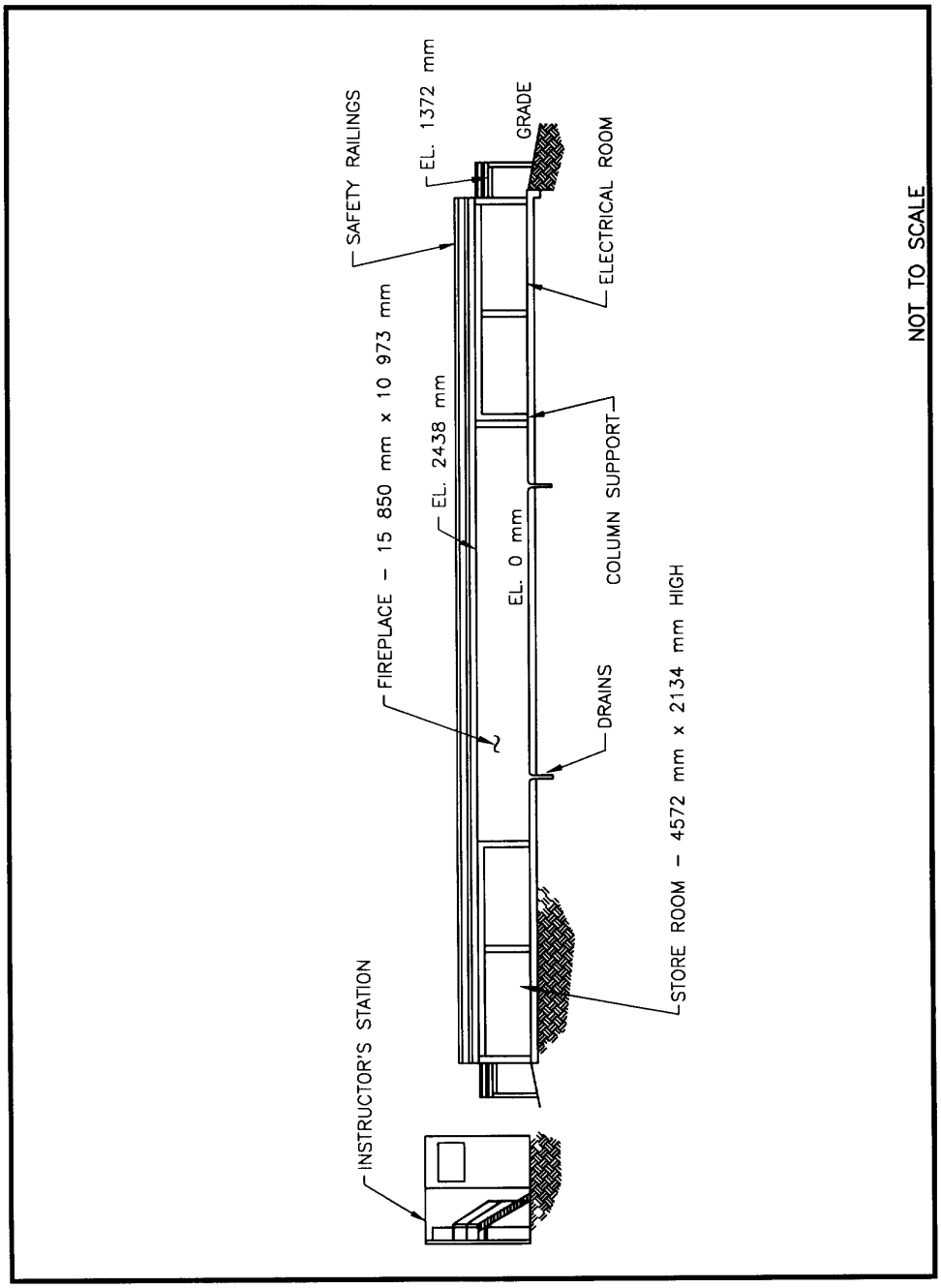

Figure E-2
19F4/19F4A Elevation

APPENDIX E (Continued)

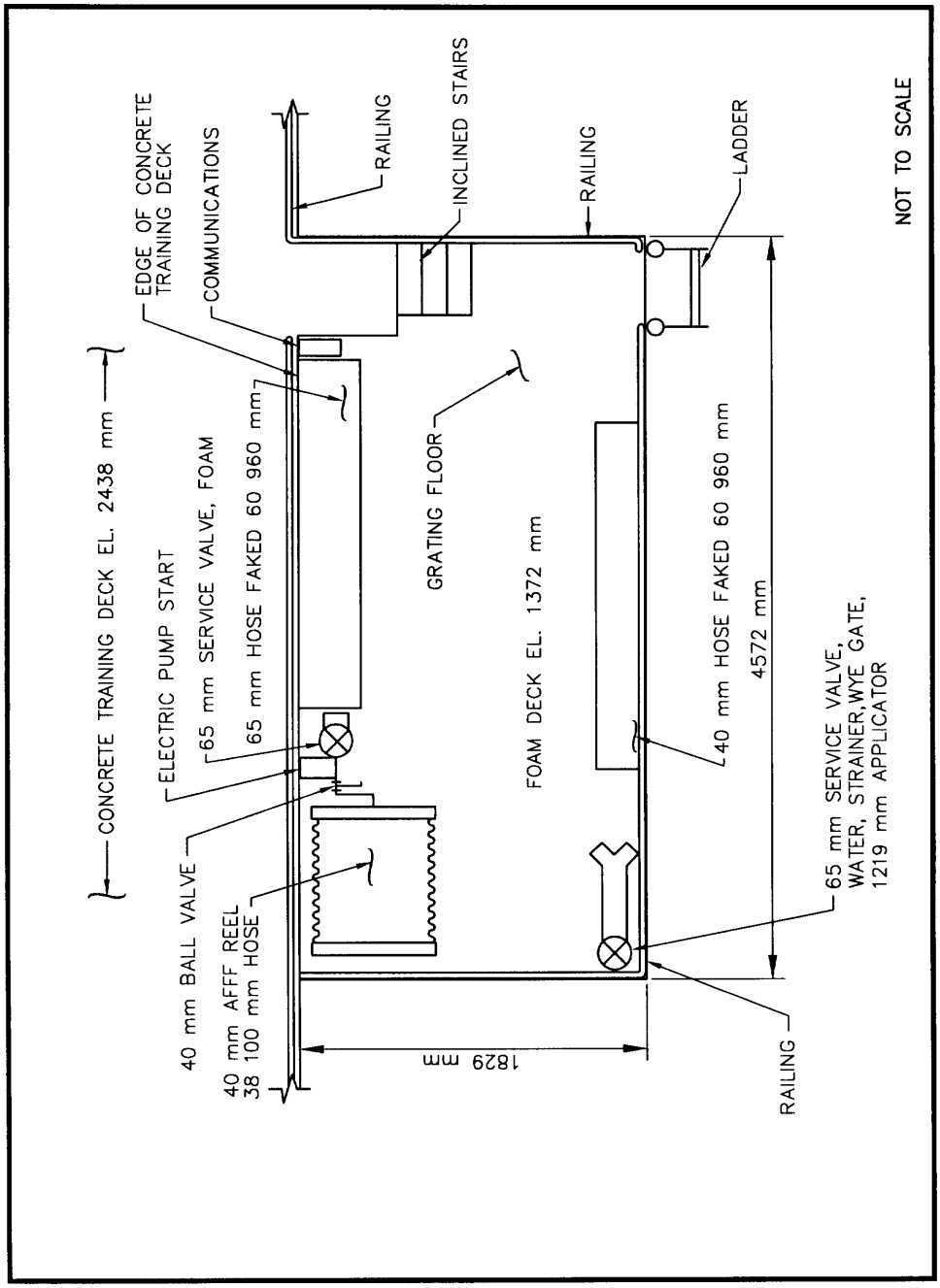

Figure E–3
19F4/19F4A Foam Deck

APPENDIX E (Continued)

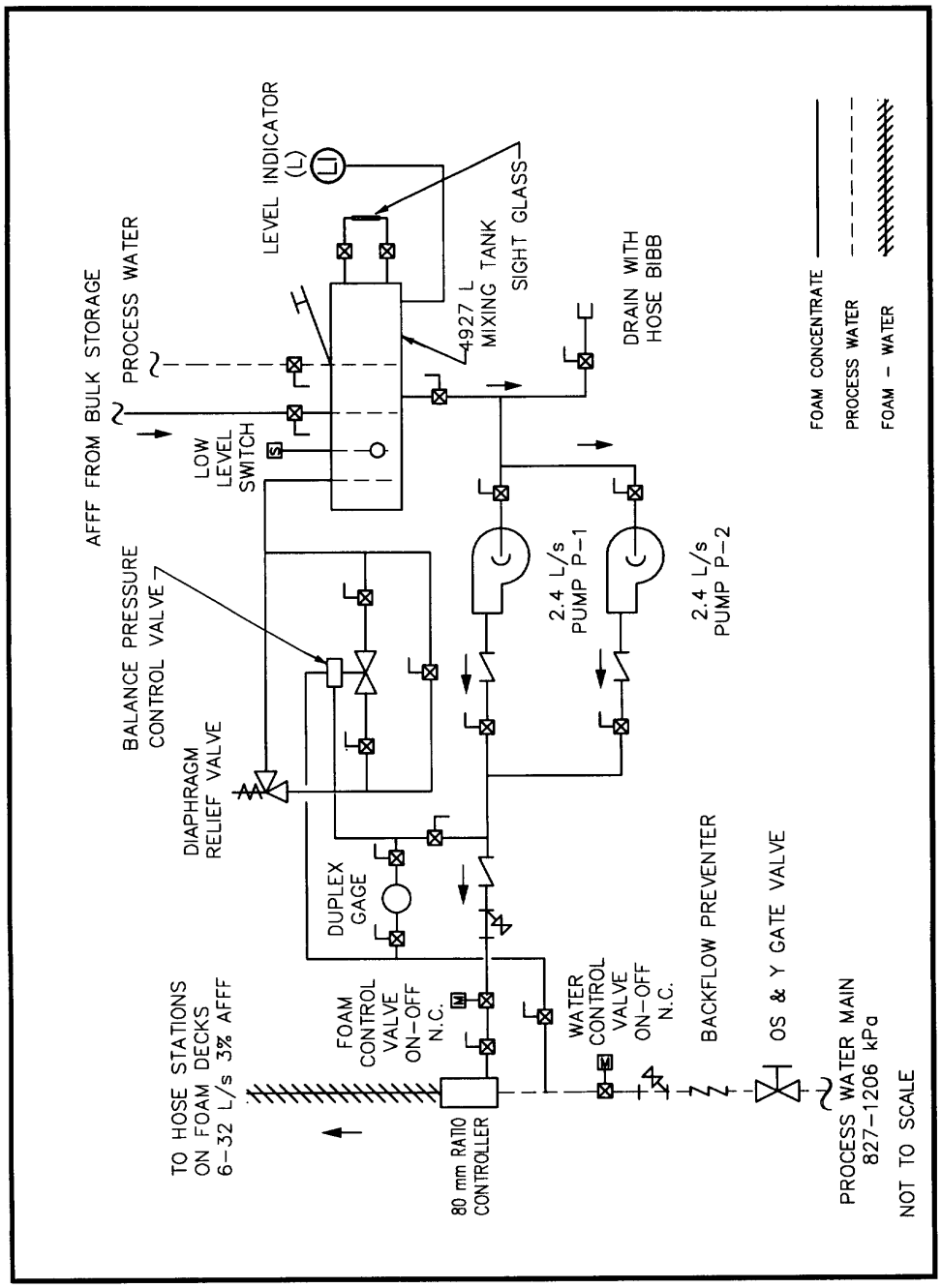

Figure E-4
19F4/19F4A AFFF Balanced Pressure
Proportioning System

APPENDIX E (Continued)

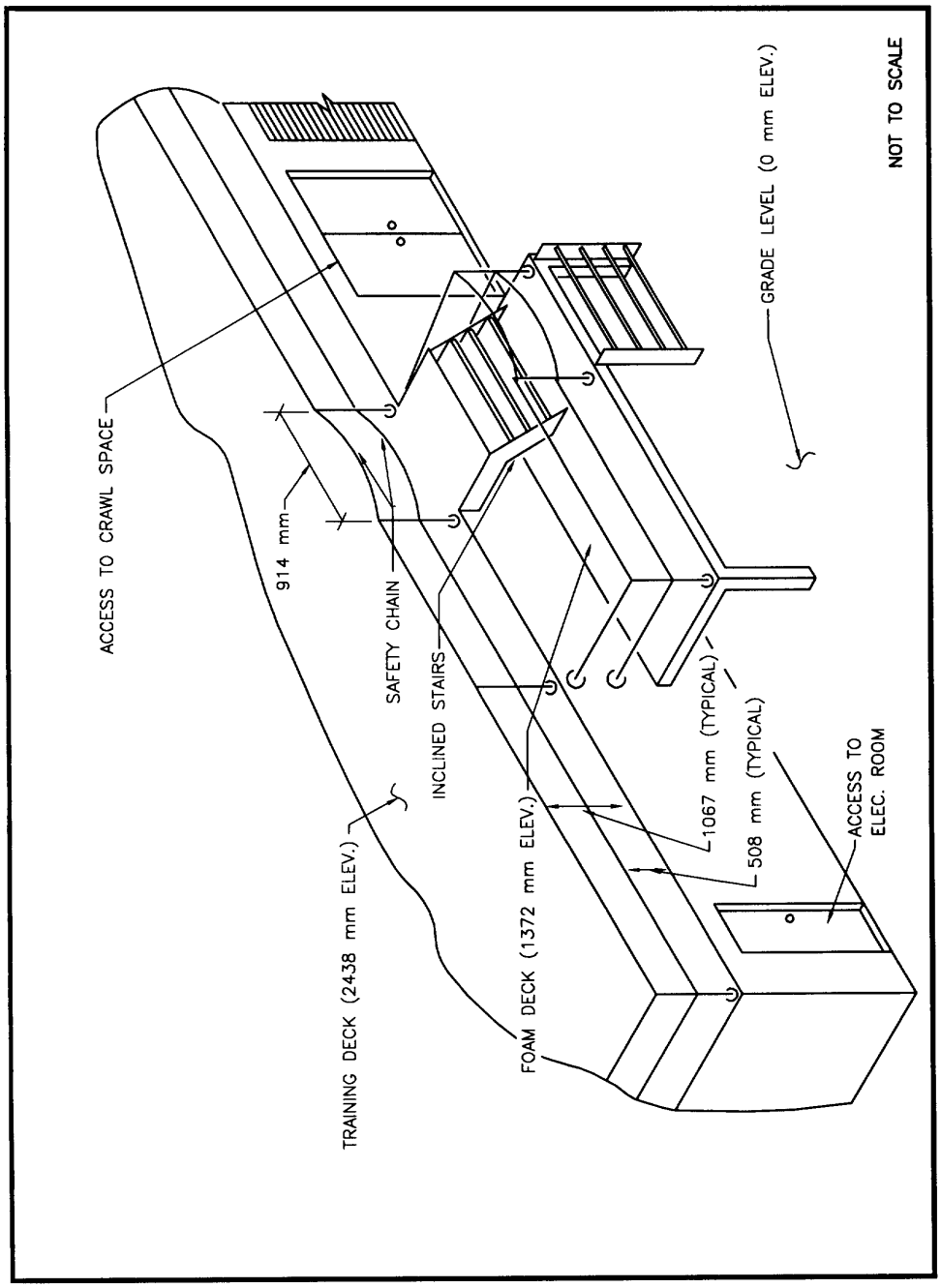

FIGURE E–5
TRAINING AND FOAM DECK RAILING

APPENDIX E (Continued)

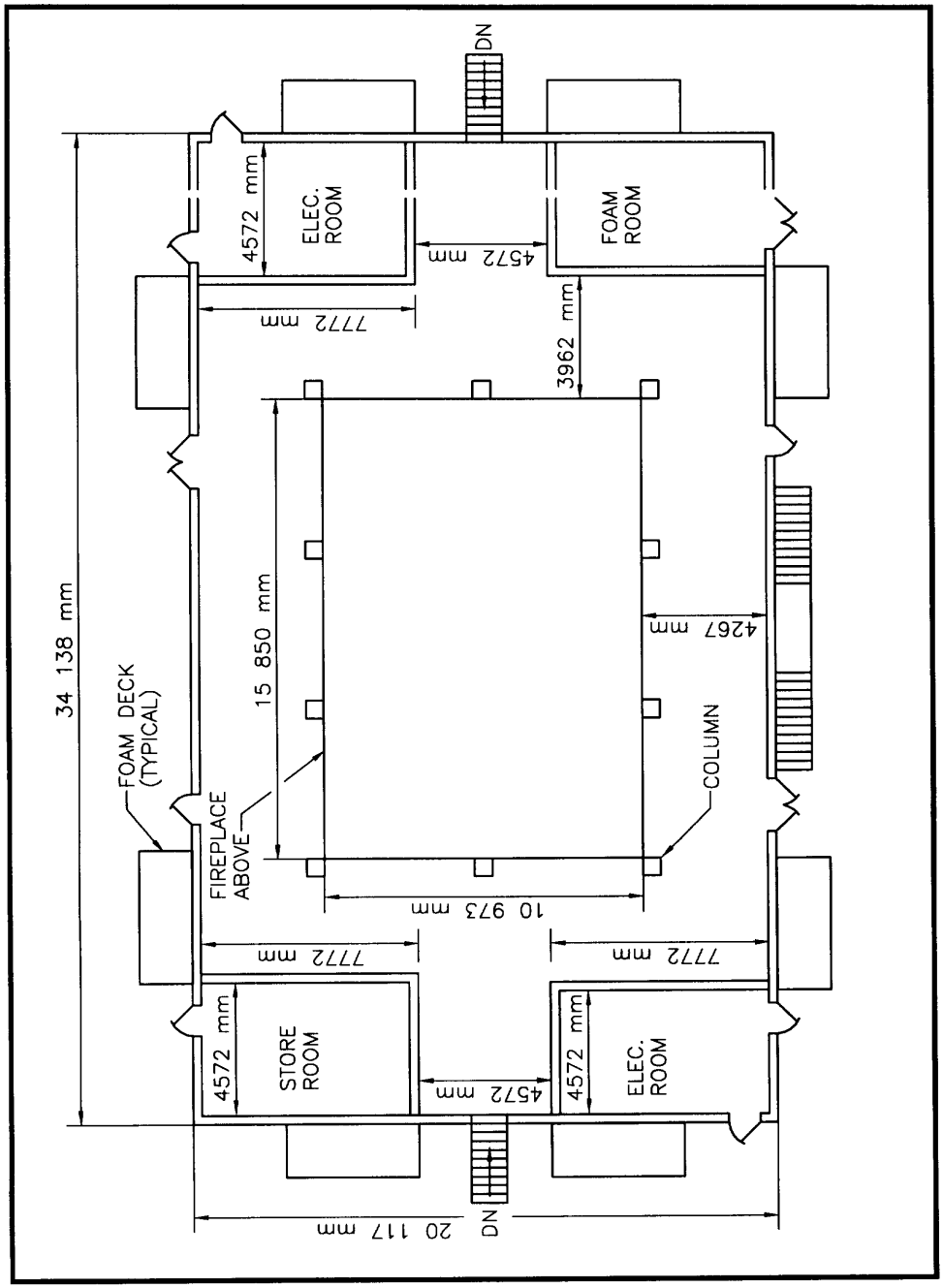

Figure E–6

19F4/19F4A Crawlspace Plan and Pedestal

APPENDIX F
19F5 AND 19F5A STRUCTURES

19F5/19F5A	First Floor Plan	F-1
19F5/19F5A	Elevation	F-2

APPENDIX F (Continued)

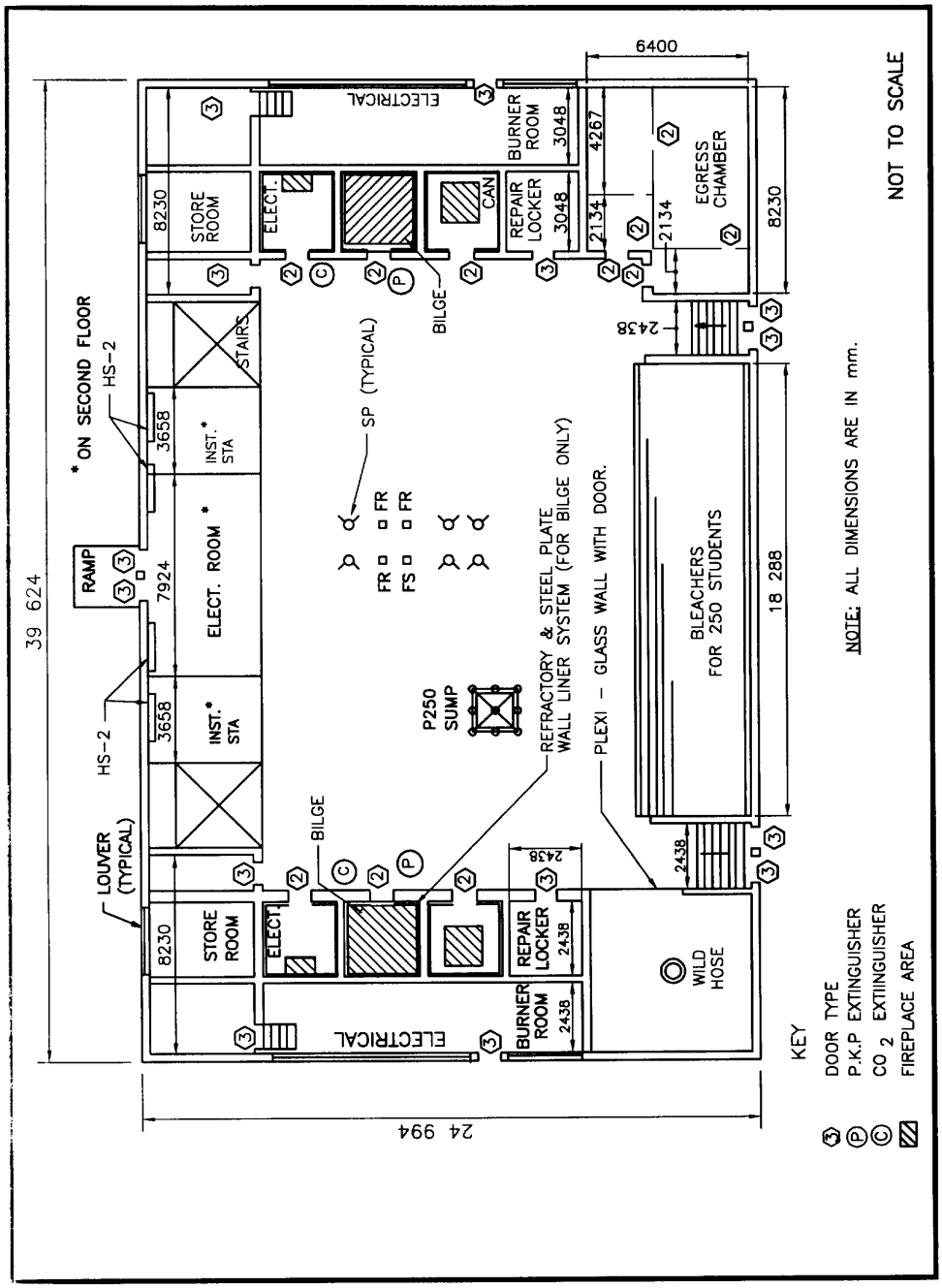

Figure F-1
19F5/19F5A First Floor Plan

APPENDIX F (Continued)

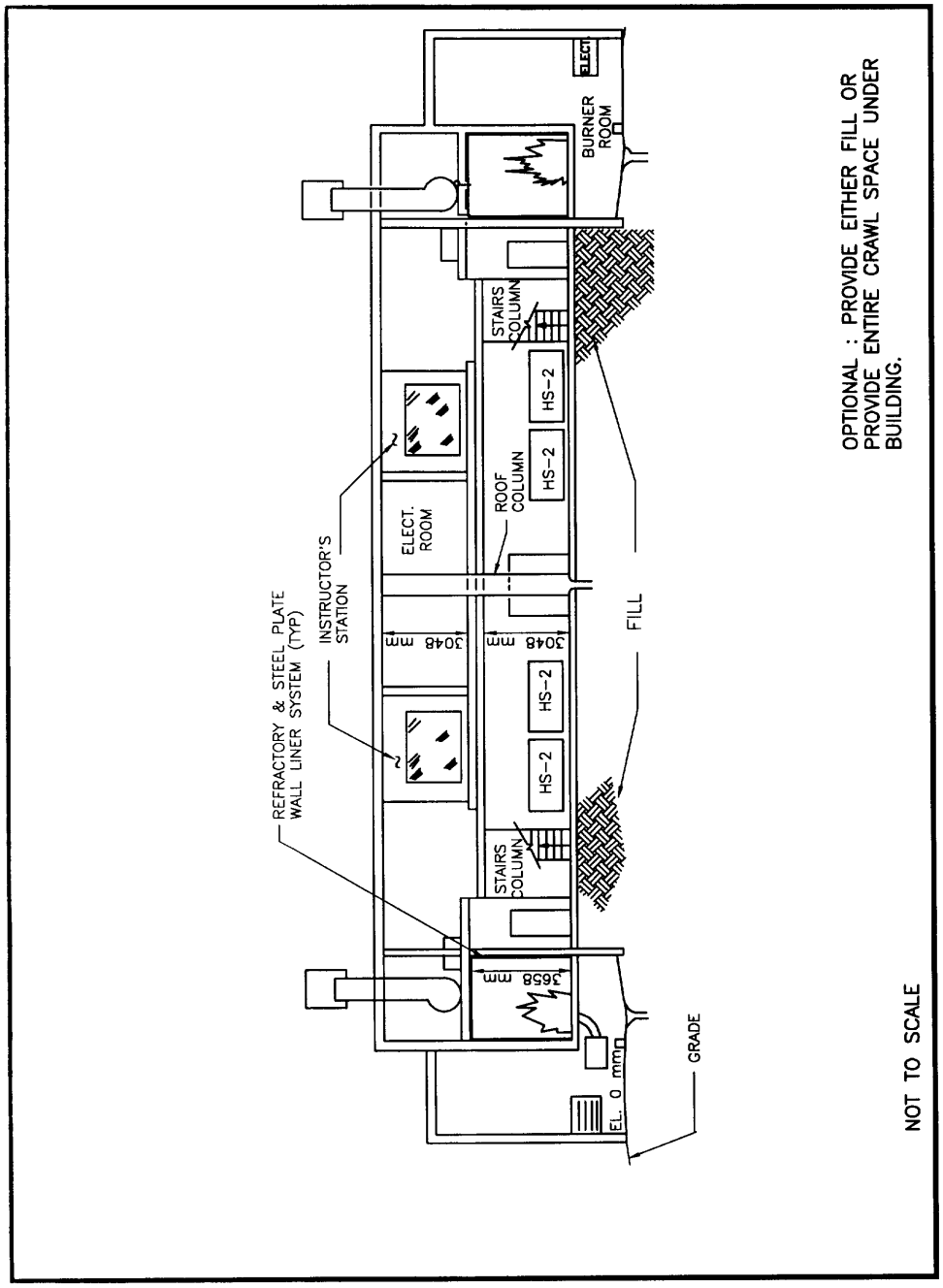

Figure F-2
19F5/19F5A Elevation

APPENDIX G
21C12 AND 21C12A STRUCTURES

21C12/21C12A	First Floor Plan	G-1
21C12/21C12A	Section	G-2
21C12/21C12A	Section	G-3
21C12/21C12A	Training Compartment/Equipment Mockup	G-4
21C12/21C12A	OBA Canister Storage Rack	G-5
21C12/21C12A	EAB Cabinet	G-6
21C12/21C12A	OBA Locker	G-7
21C12/21C12A	Fire Hose Locker Wall Mounted	G-8
21C12/21C12A	Fire Hose Locker Floor Mounted	G-9
21C12/21C12A	AFFF Fill Station	G-10
21C12/21C12A	EAB Outlet Housing	G-11
21C12/21C12A	Combined Hose Station	G-12
21C12/21C12A	EAB System Schematic	G-13
21C12/21C12A	Alarm System Schematic	G-14

APPENDIX G (Continued)

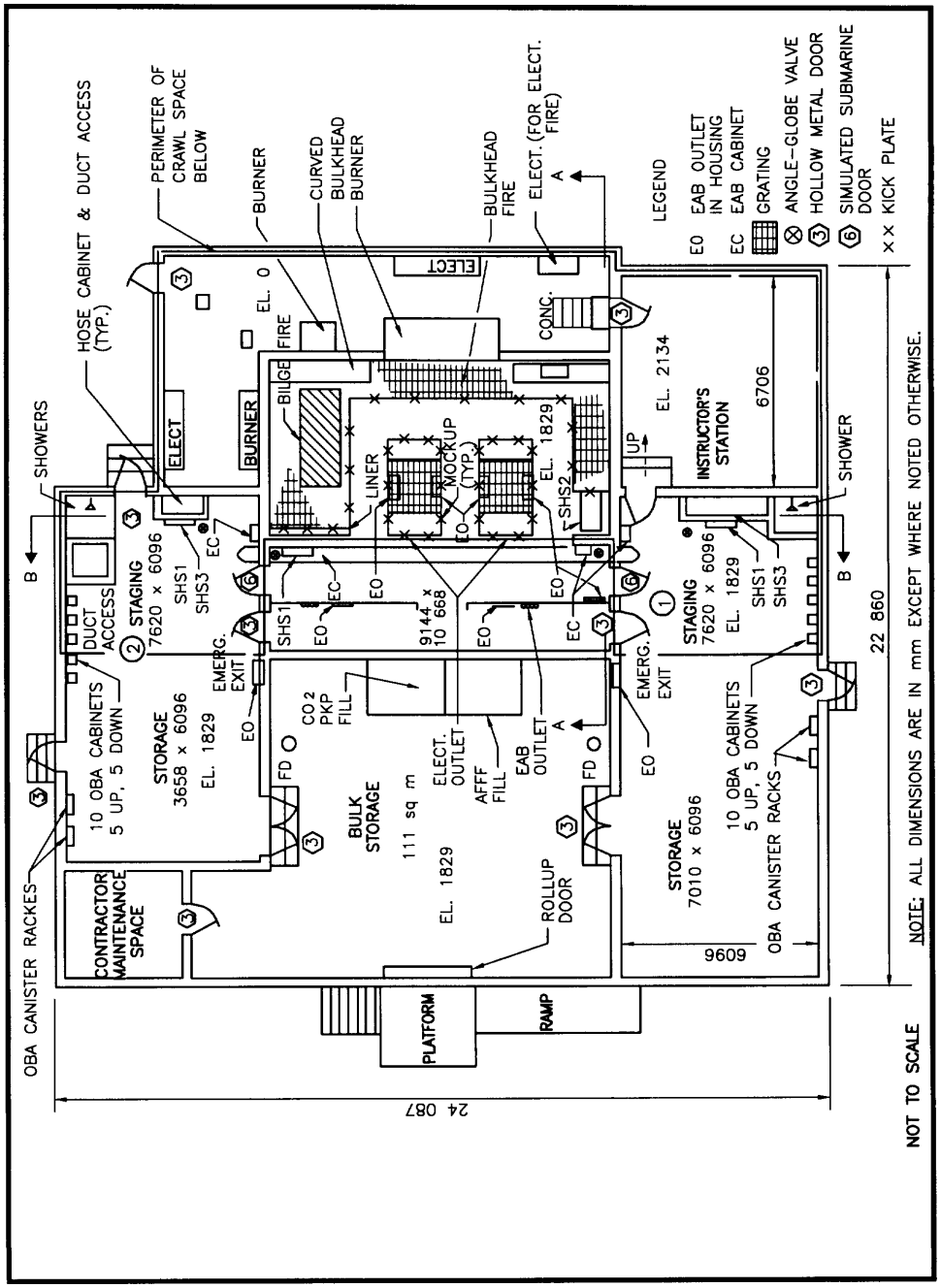

Figure G-1
21C12/21C12A First Floor Plan

APPENDIX G (Continued)

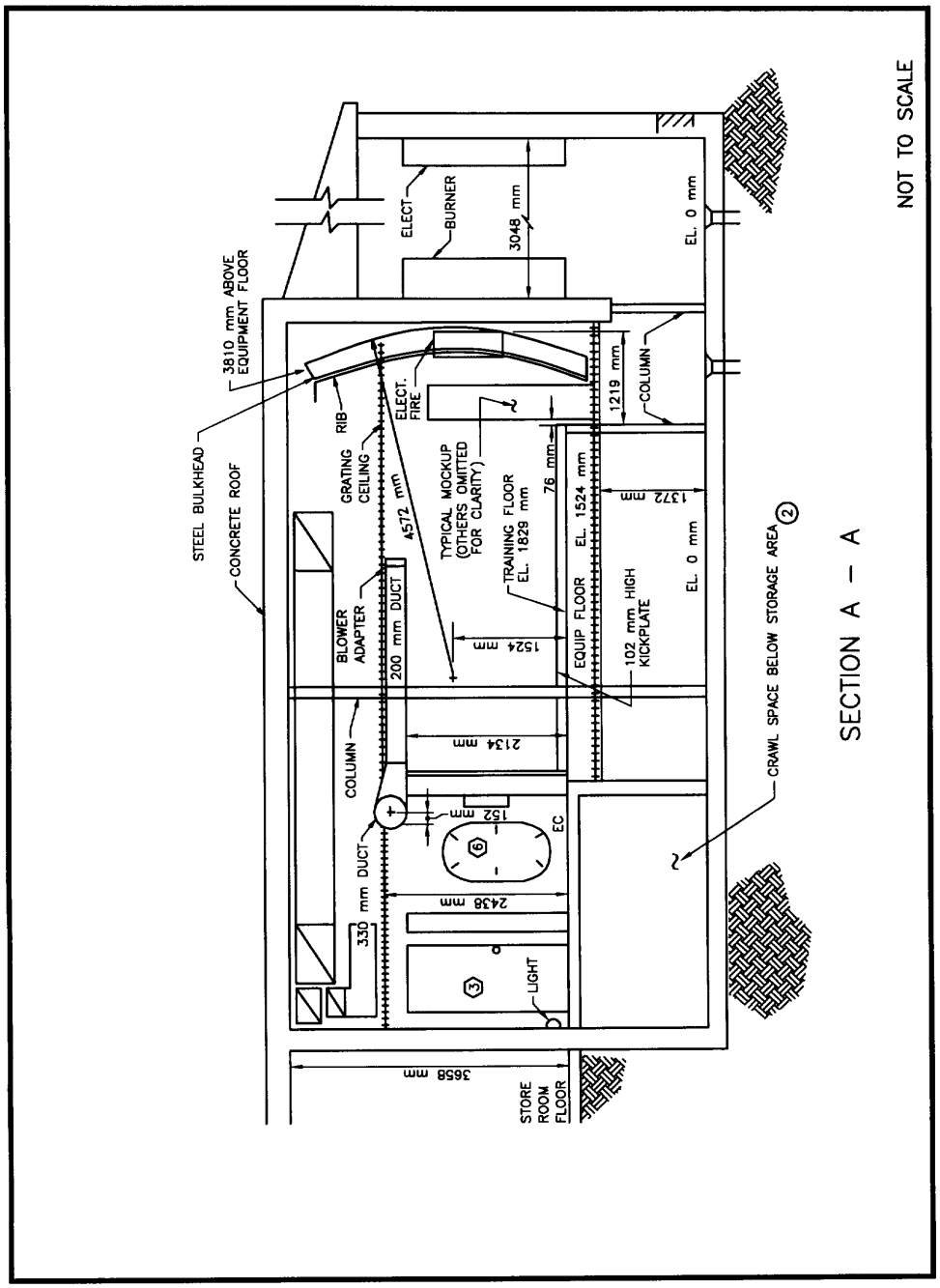

Figure G–2
21C12/21C12A Section

APPENDIX G (Continued)

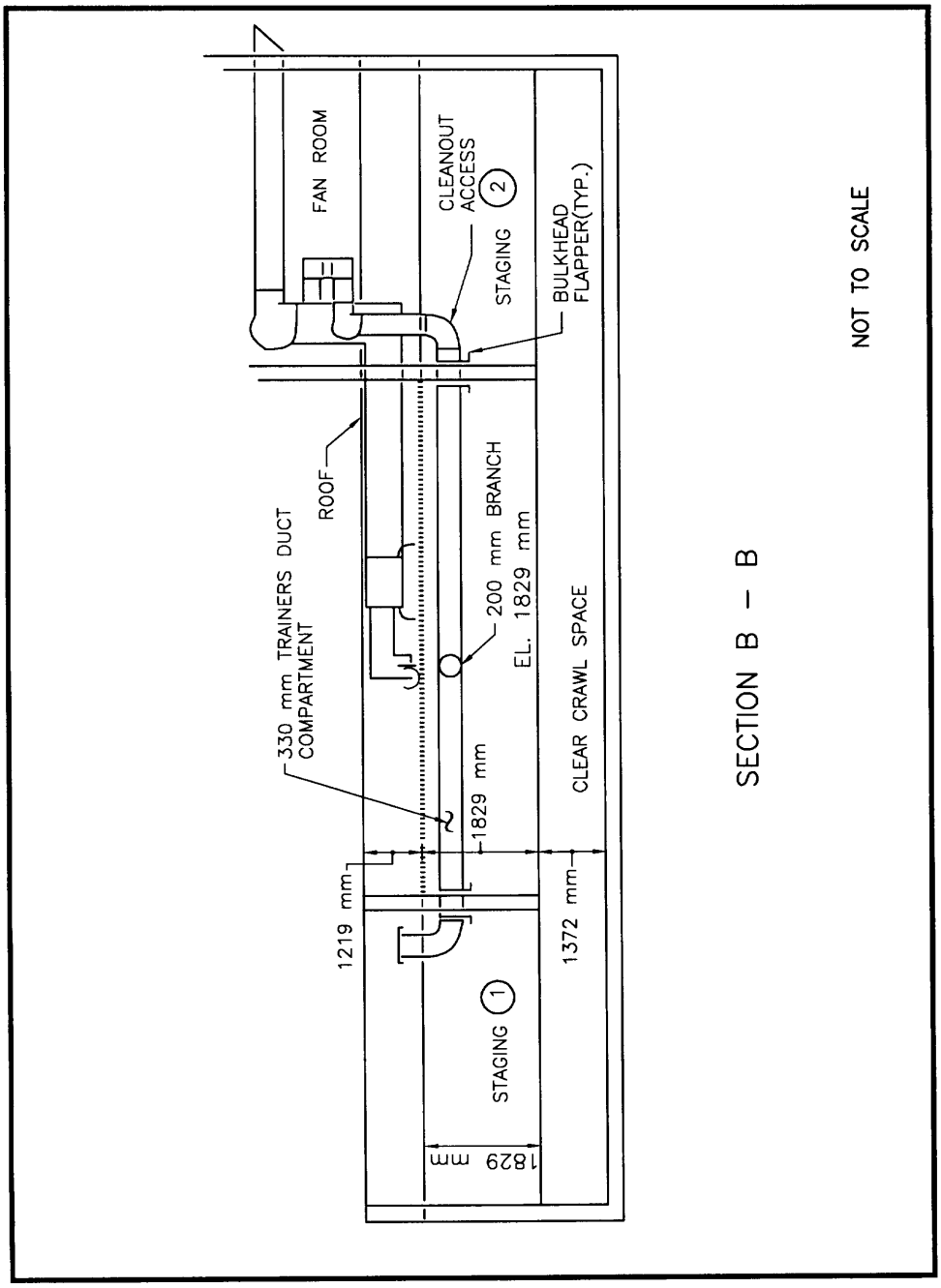

Figure G-3
21C12/21C12A Section

APPENDIX G (Continued)

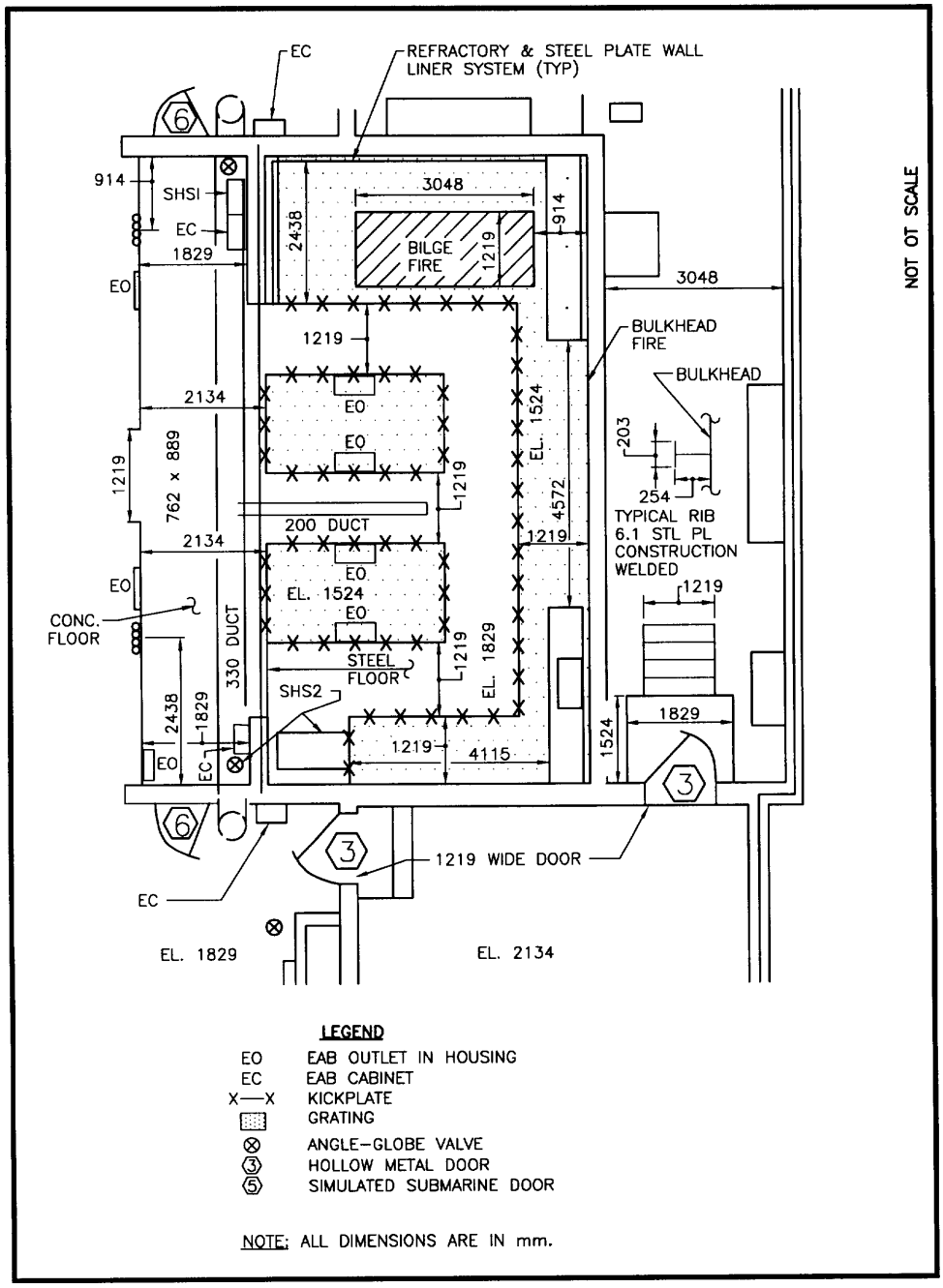

Figure G-4A

21C12/21C12A Training Compartment/Equipment Mockup

APPENDIX G (Continued)

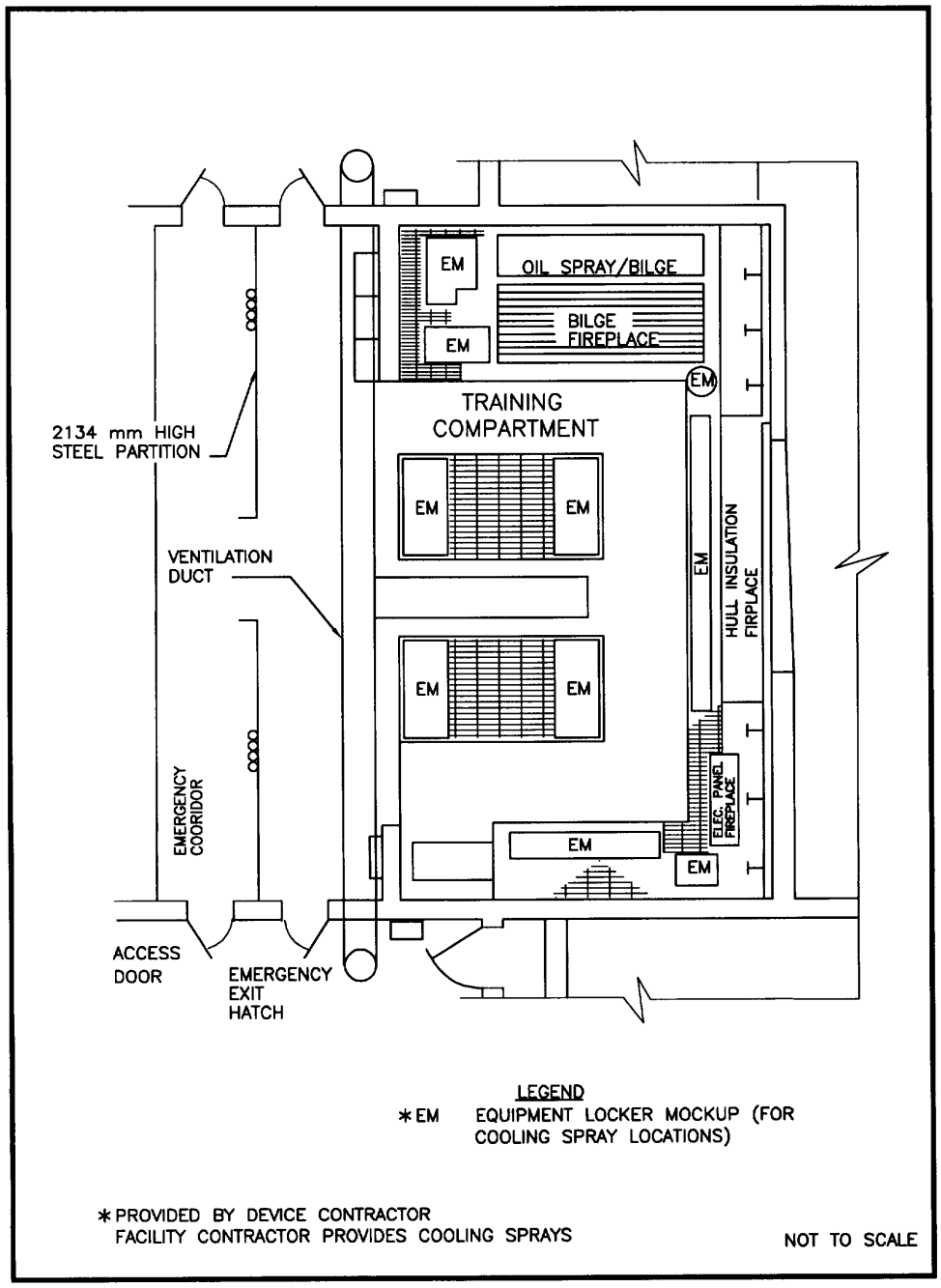

Figure G–4B

21C12/21C12A Training Compartment/Equipment Mockup

APPENDIX G (Continued)

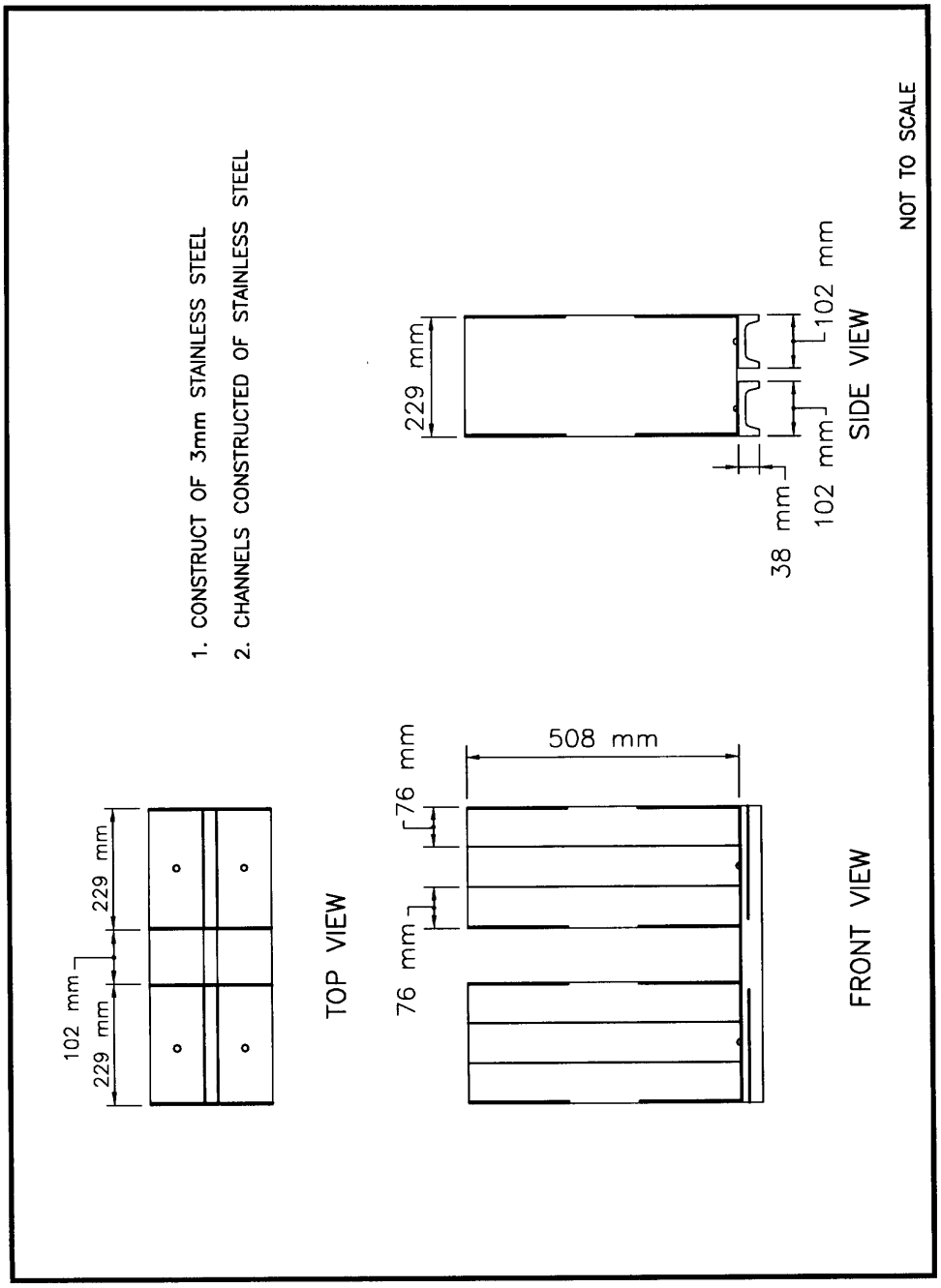

Figure G–5
21C12/21C12A OBA Canister Storage Rack

APPENDIX G (Continued)

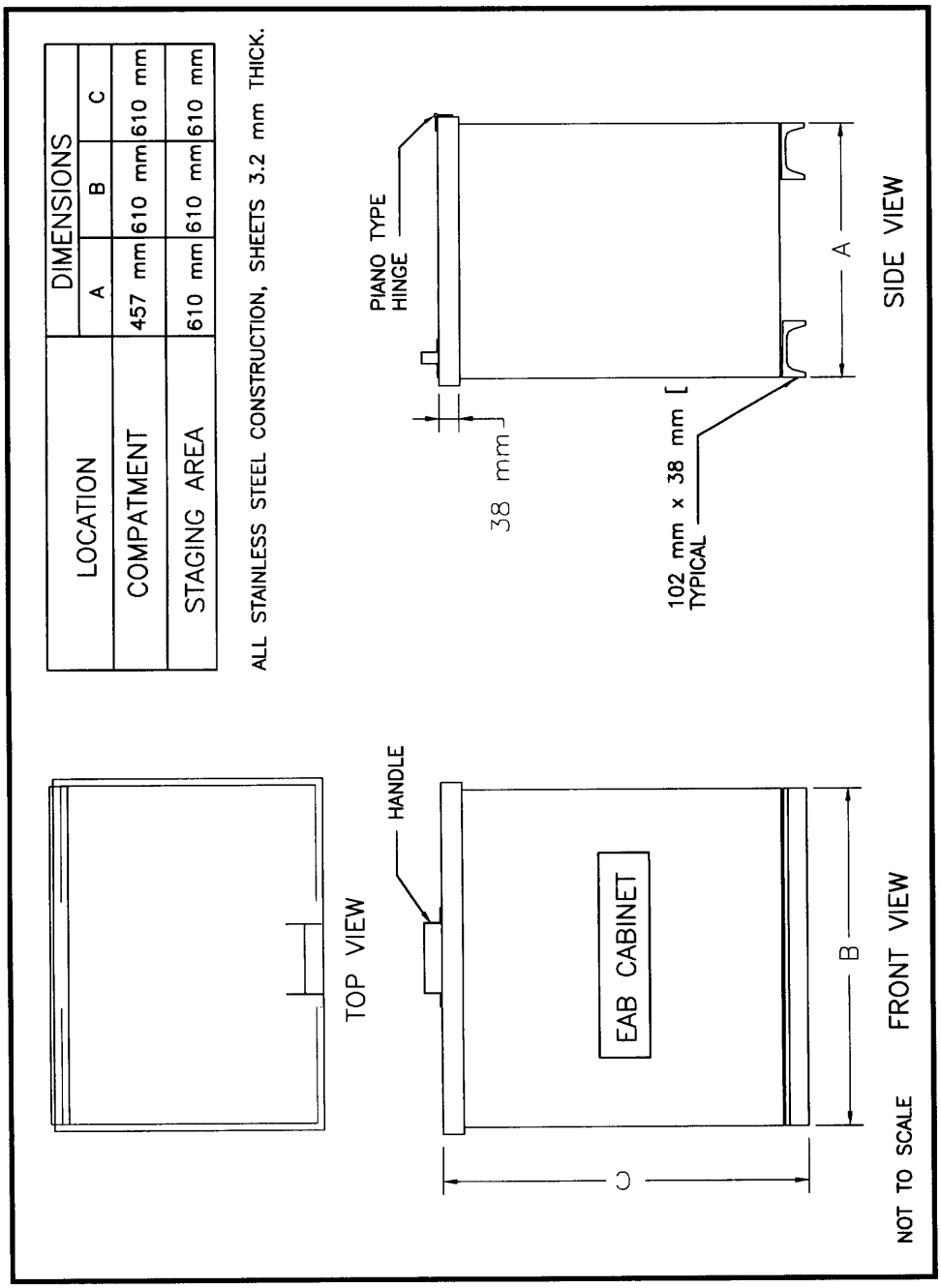

Figure G–6
21C12/21C12A EAB Cabinet

APPENDIX G (Continued)

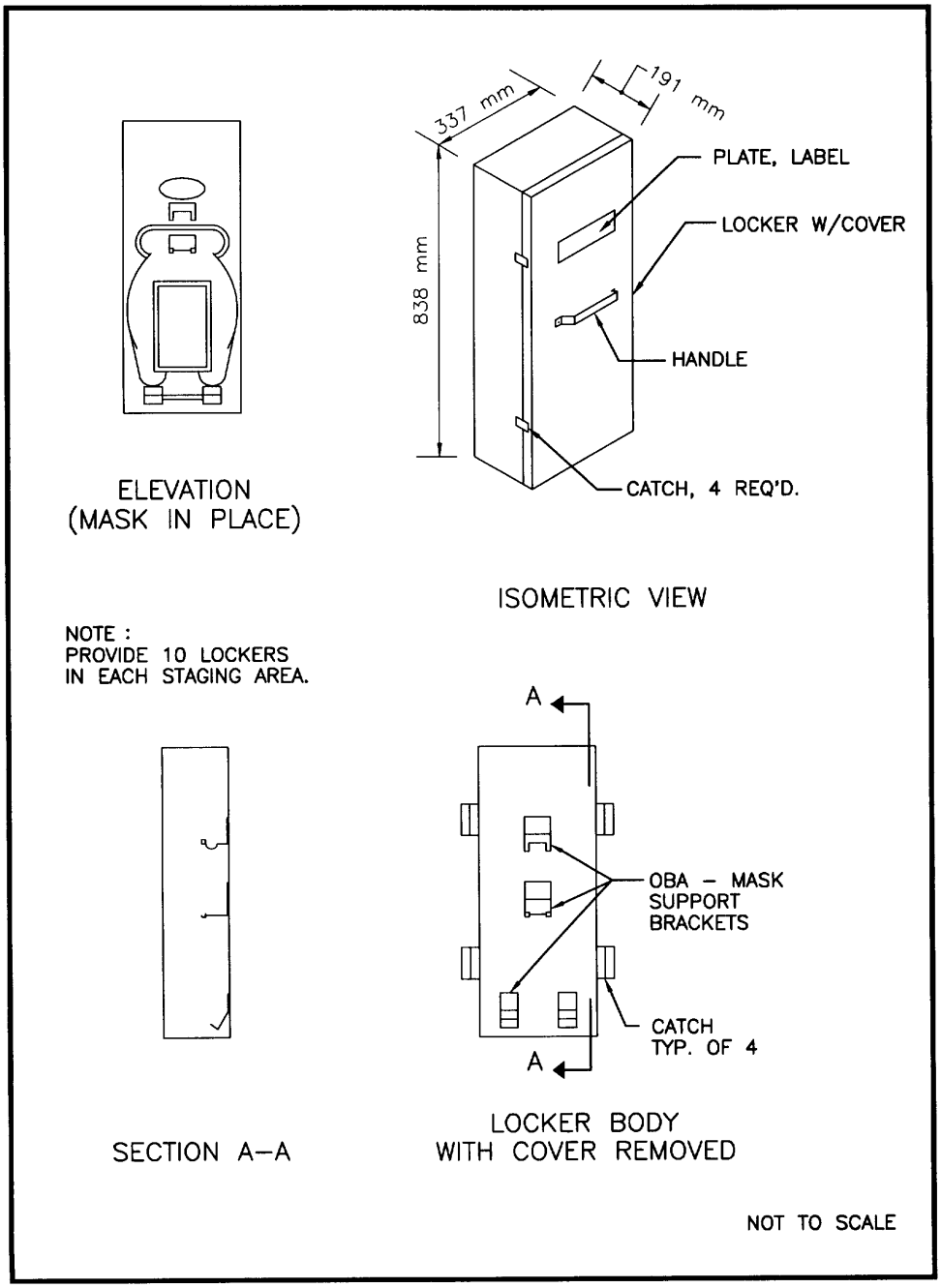

Figure G–7
21C12/21C12A OBA Locker

APPENDIX G (Continued)

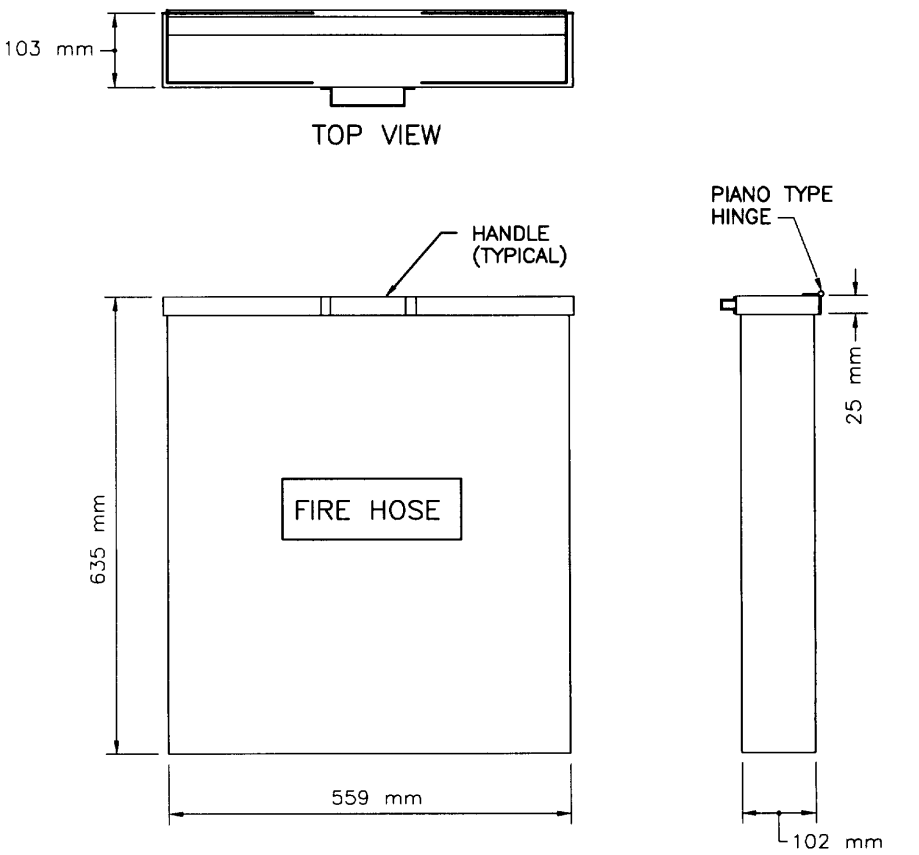

1. CONSTRUCTED OF 2 mm STAINLESS STEEL
2. STANDARD ALL–PURPOSE NOZZLE STOWED INSIDE WITH HOSE OR BRACKETED TO SIDE OF BOX
3. MOST HIDDEN LINES OMITTED FOR CLARITY

NOT TO SCALE

Figure G–8
21C12/21C12A Fire Hose Locker Wall Mounted

APPENDIX G (Continued)

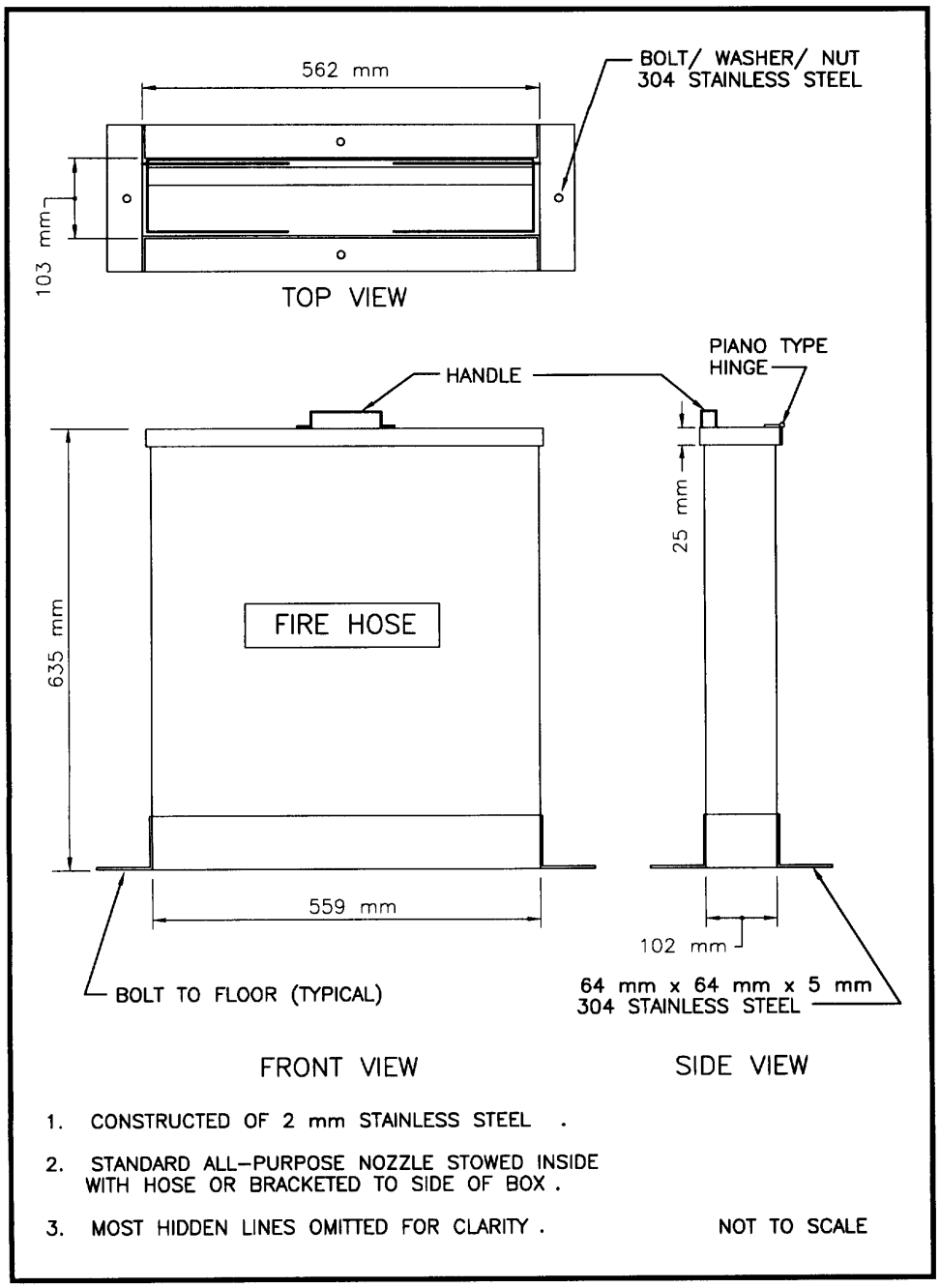

Figure G-9
21C12/21C12A Fire Hose Locker Floor Mounted

APPENDIX G (Continued)

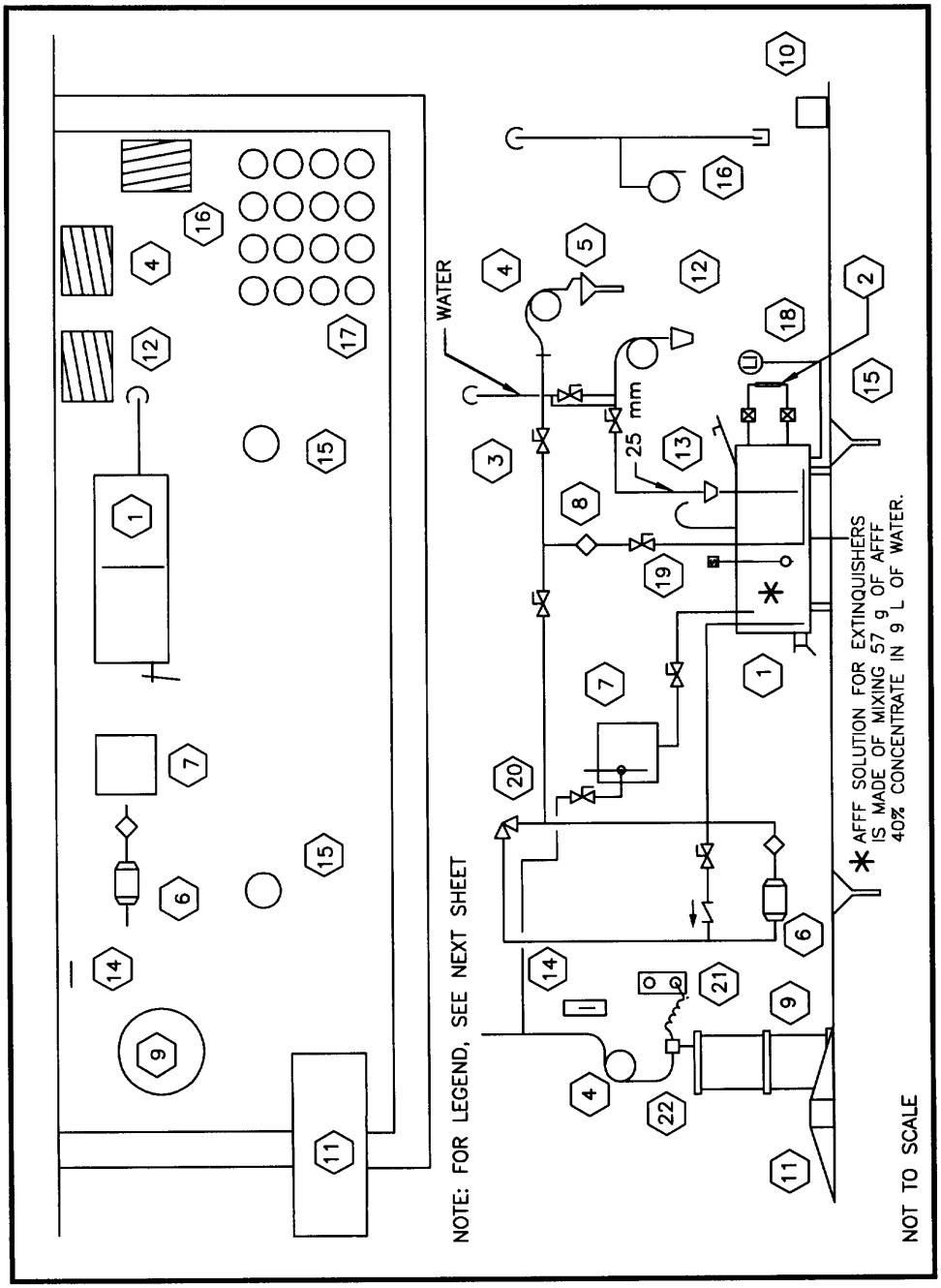

Figure G–10A
AFFF Fill Station

APPENDIX G (Continued)

LEGEND

1. TANK, 1137 L WITH TOP AND LARGE LID; 20 mm DRAIN (3% AFF SOLUTION)
2. SIGHT GLASS
3. BALL VALVE, TYPICAL
4. 15 mm HOSE 3048 mm LONG; RACK
5. TRIGGER VALVE WITH 914 mm LONG,13 mm TUBE; NO NOZZLE
6. INLINE PUMP 0.631 L/s AT 6096 mm HEAD
7. MEASURING TANK 38 L
8. SQUARE HEAD COCK
9. 208 L DRUM
10. SPILL PREVENTION CURB
11. MOUNTABLE CURB
12. 15 mm HOSE 6096 mm LONG WITH NOZZLE; RACK
13. OPEN SITE WATER FILL
14. PUMP START SWITCH
15. FLOOR DRAIN, TYPICAL
16. SHOP AIR STATION WITH 3048 mm HOSE
17. EMPTY EXTINGUISHERS
18. LIQUID LEVEL INDICATOR
19. LOW LEVEL PUMP SHUT OFF
20. RELIEF VALVE
21. 110 VOLT RECEPTICAL FOR (22)
22. DRUM PUMP

NOTE

1. ALL CONSTRUCTION SHALL BE CORROSION RESISTANT METAL
2. ALL PIPE SIZES ARE 20 mm UNLESS INDICATED OTHERWISE

Figure G–10B
AFFF Fill Station

APPENDIX G (Continued)

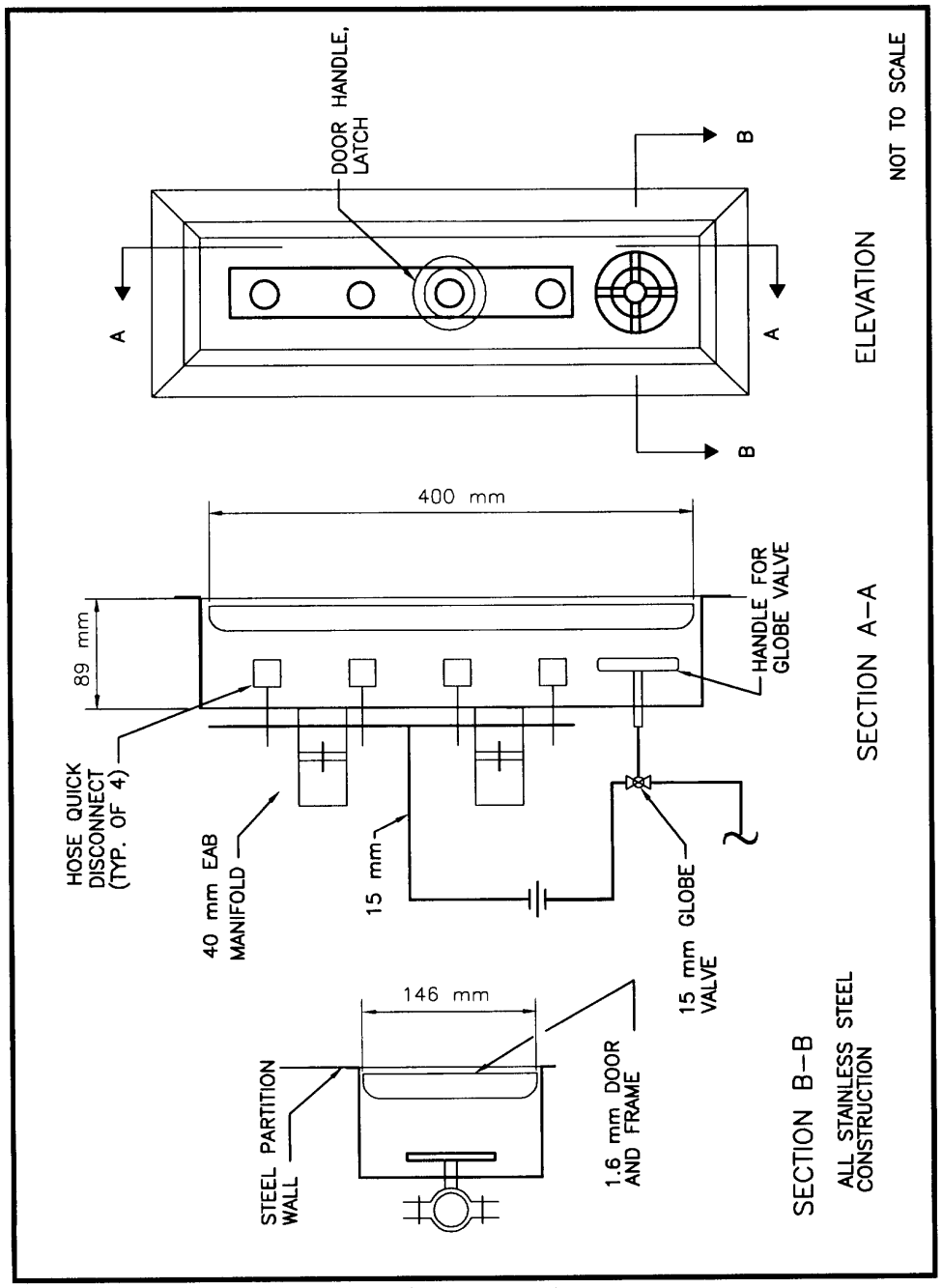

Figure G–11
21C12/21C12A EAB Outlet Housing

APPENDIX G (Continued)

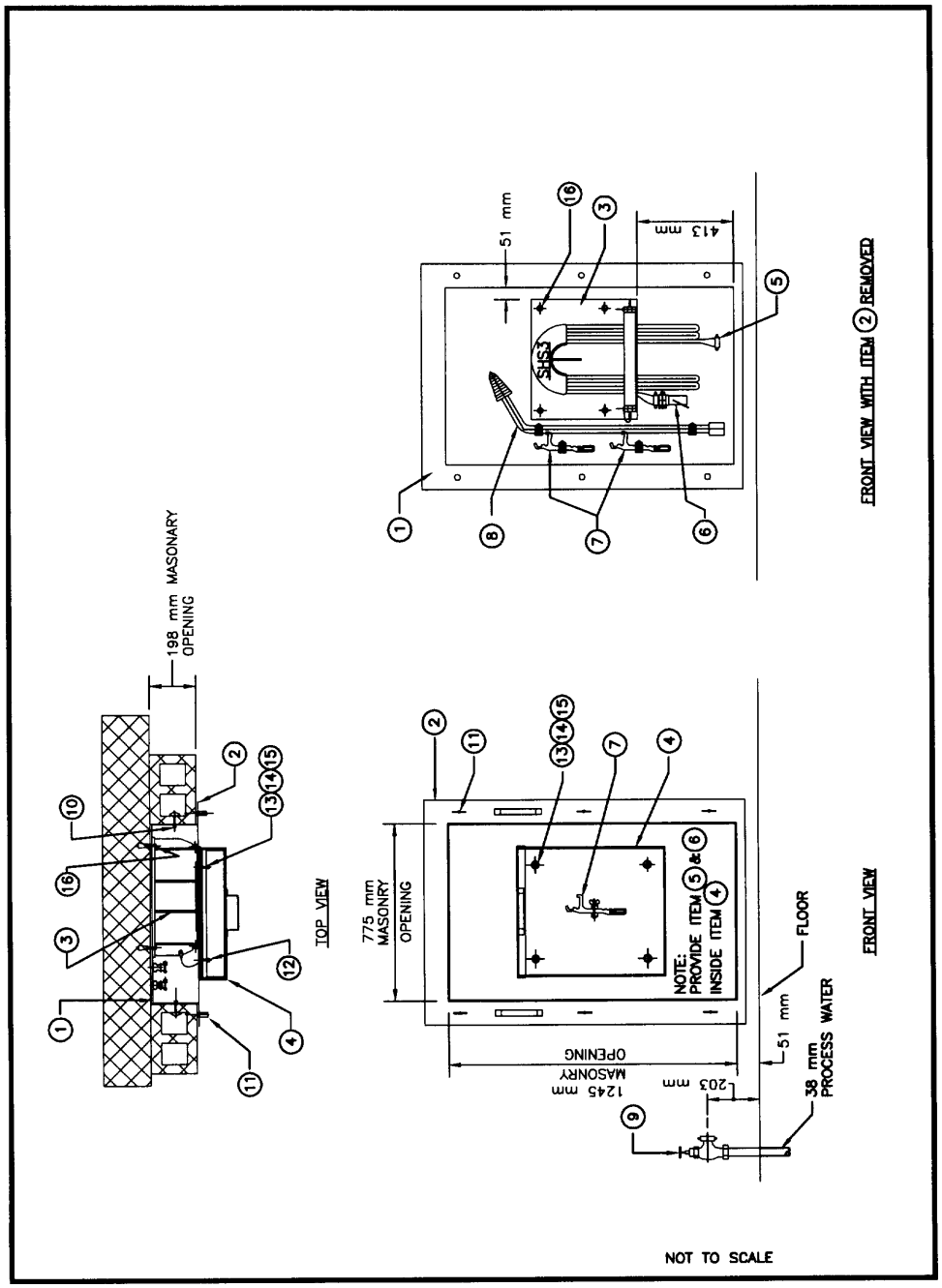

Figure G–12A
COMBINED HOSE STATION

APPENDIX G (Continued)

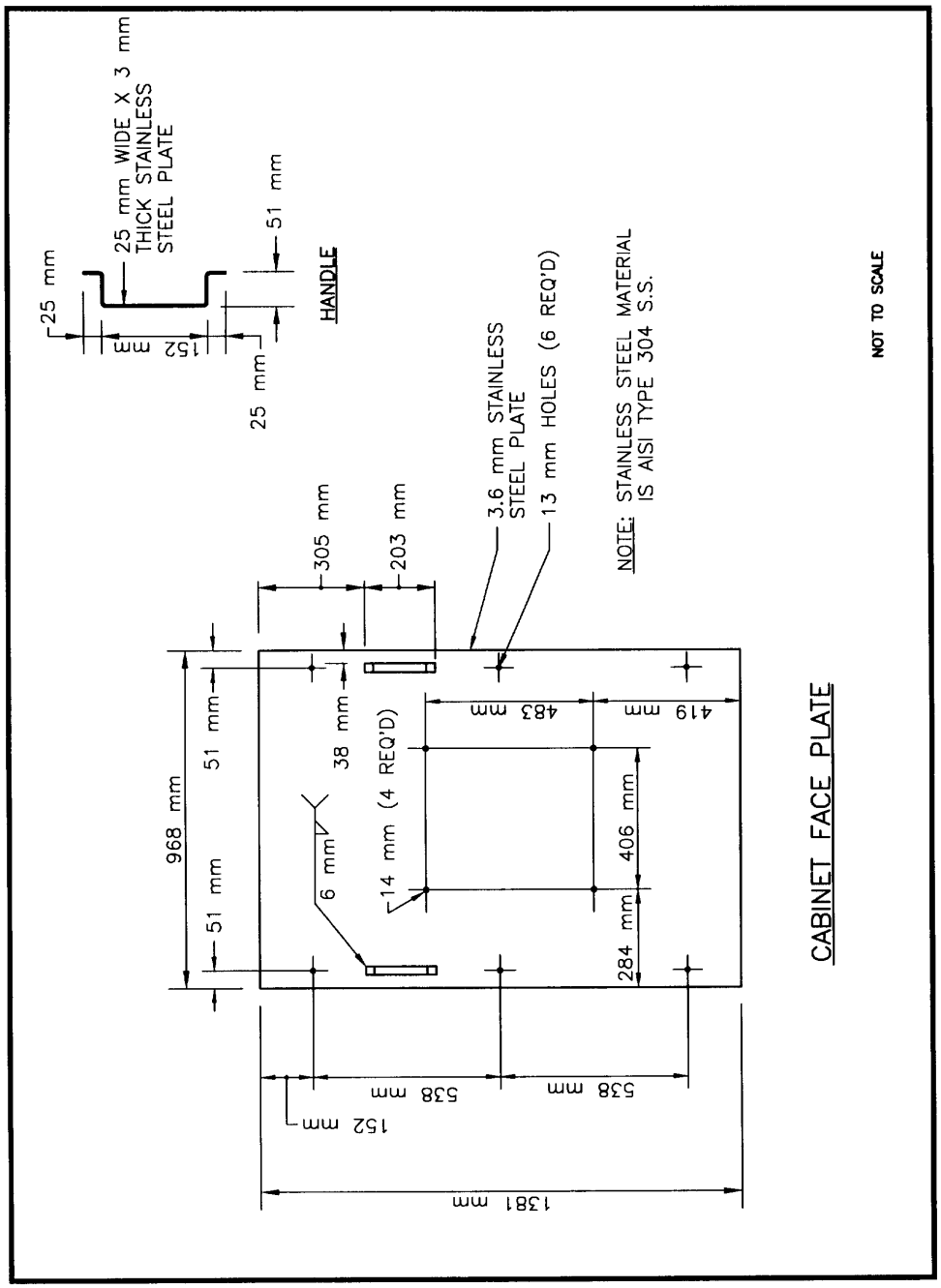

Figure G–12B
COMBINED HOSE STATION

APPENDIX G (Continued)

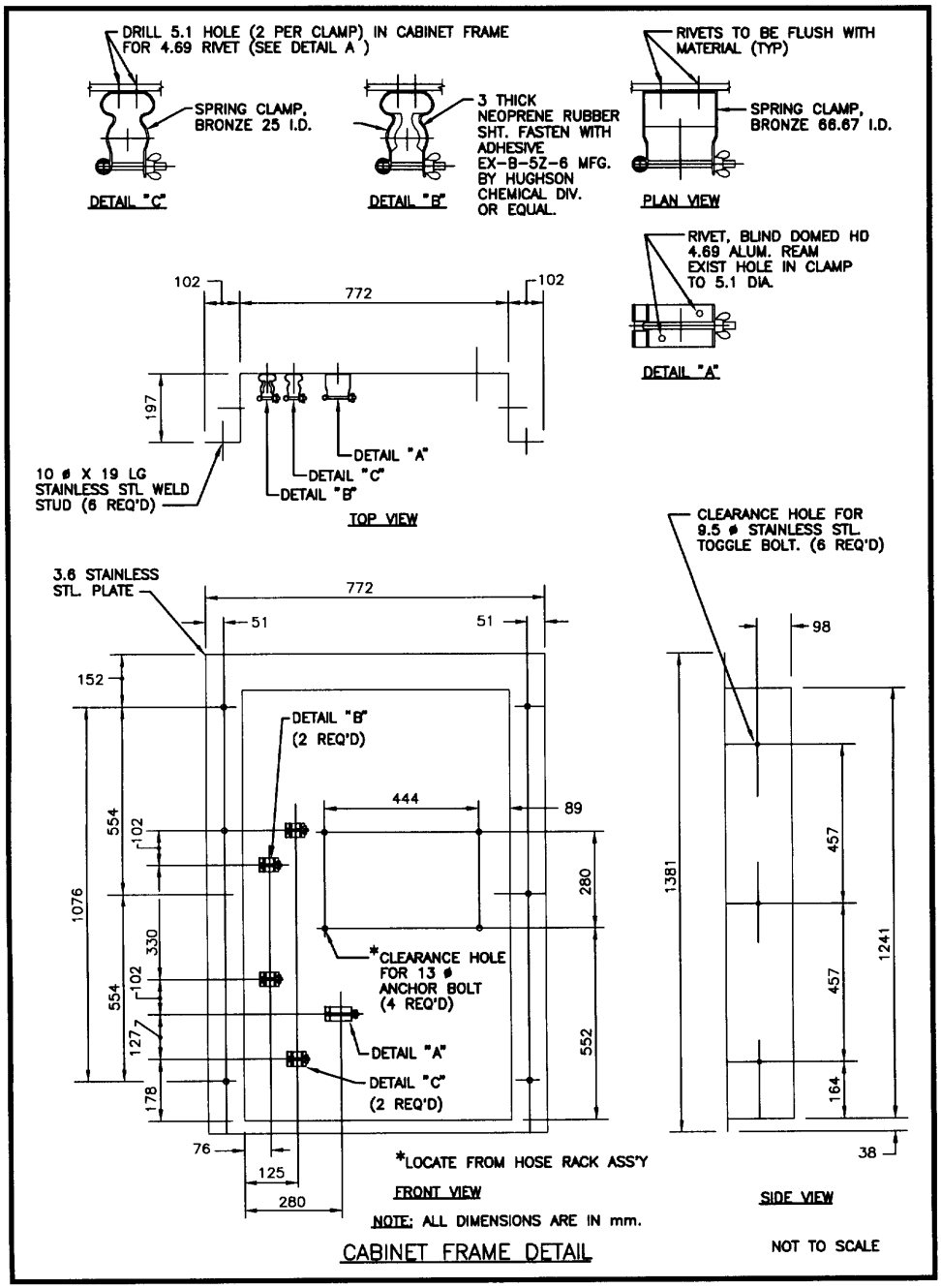

Figure G-12C

COMBINED HOSE STATION

APPENDIX G (Continued)

LIST OF MATERIALS

ITEM	QTY.	DESCRIPTION	REF. DRAWINGS
1	1	CABINET FRAME ASSY.	
2	1	CABINET FACE PLATE	
3	1	HOSE RACK ASSY.	
4	1	FIRE HOSE LOCKER ASSY	
5	2	FIRE HOSE – 40 mm x 7620 mm LONG	MIL–H–24606
6	2	FIRE HOSE NOZZLE – BRASS STYLE – 2069	NAVSHIPS 810–1385834
7	3	SPANER WRENCH STYLE 46	NAVSHIPS 810–4444647
8	1	APPLICATOR – 410 – STYLE 2069	NAVSHIPS 810–1385834
9	1	WALL OR FLOOR MTD. 40 mm HOSE ANGLE GLOBE VALVE, ONE END FLANGED. ONE END MALE THREADED WITH HOSE CAP AND CHAIN. BRONZE 40 mm	NAVSEA 803–1385711
10	6	10 mm ø S.S. TOGGLE BOLTS 114mm LONG	
11	6	10 mm ø S.S. WING NUTS	
12	4	13 mm THICK SPACER – S.S.	
13	4	13 mm S.S. NUT	
14	4	13 mm S.S. LOCK WASHER	
15	4	13 mm ø BOLT – 32 mm LONG	
16	4	13 mm ø ANCHOR BOLTS	

NOTE: STAINLESS STEEL MATERIAL IS AISI TYPE 304 S.S.

Figure G–12D
COMBINED HOSE STATION

APPENDIX G (Continued)

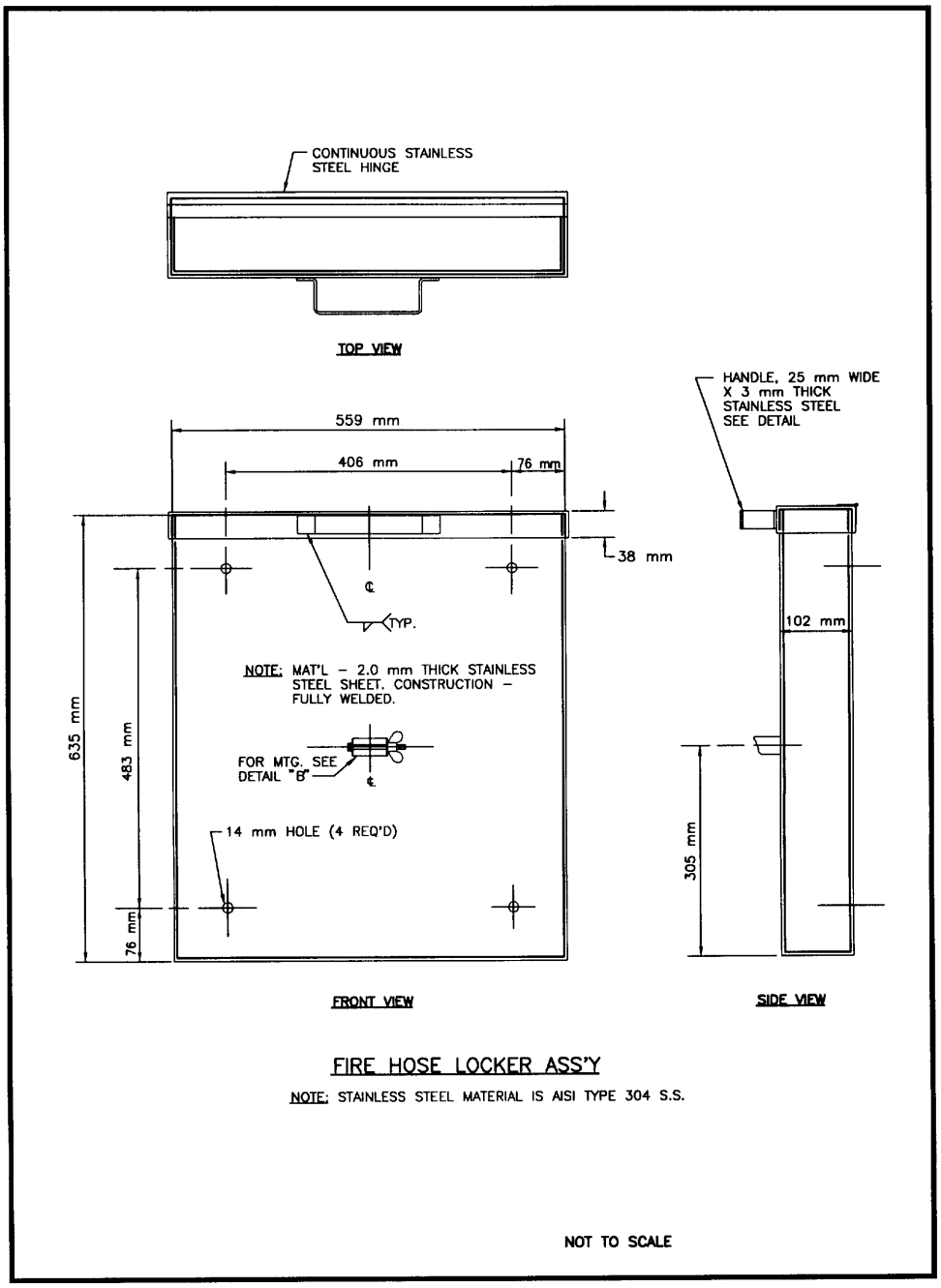

Figure G–12E
COMBINED HOSE STATION

APPENDIX G (Continued)

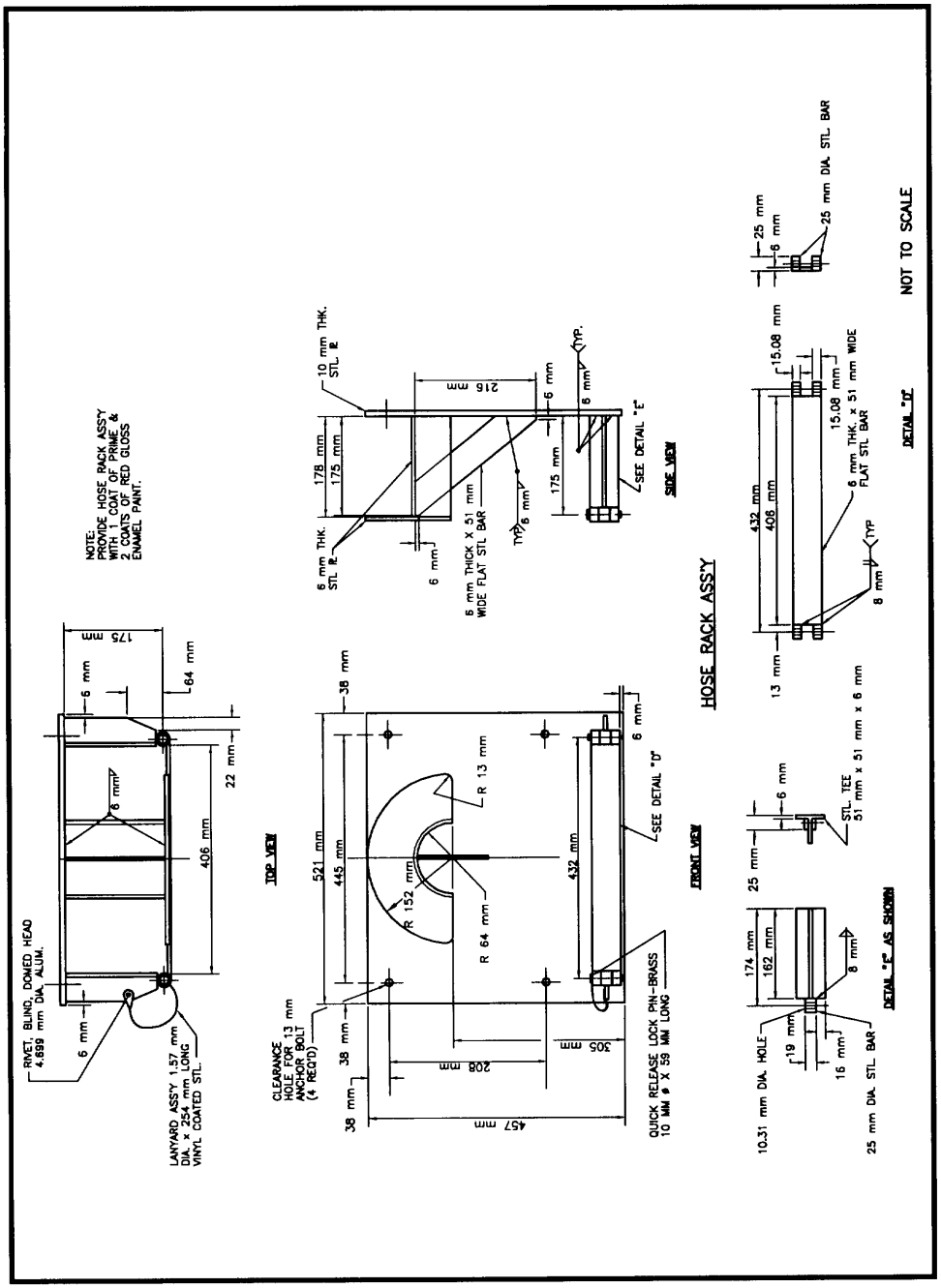

Figure G–12F
COMBINED HOSE STATION

APPENDIX G (Continued)

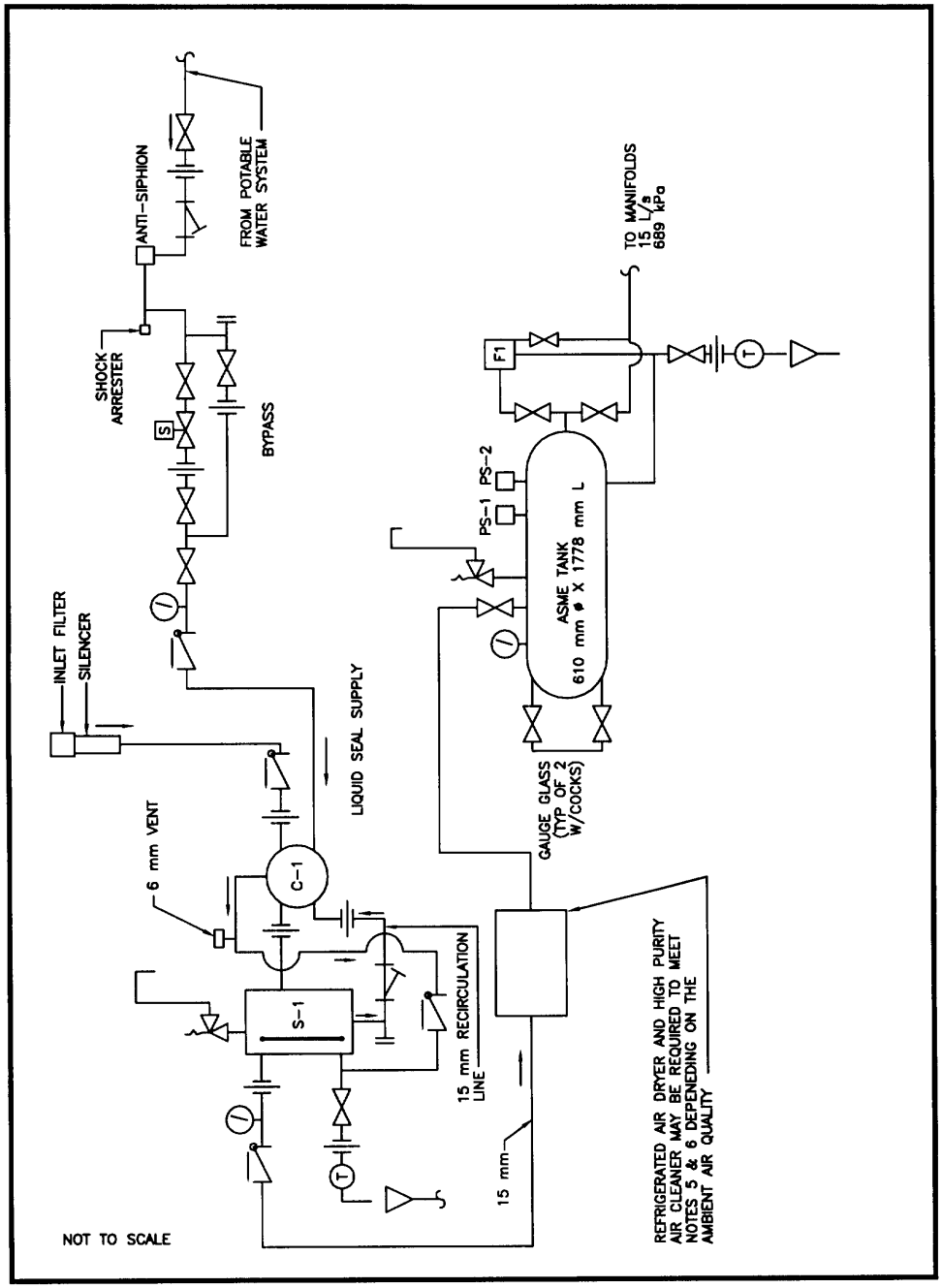

Figure G-13A
EAB SYSTEM SCHEMATIC

APPENDIX G (Continued)

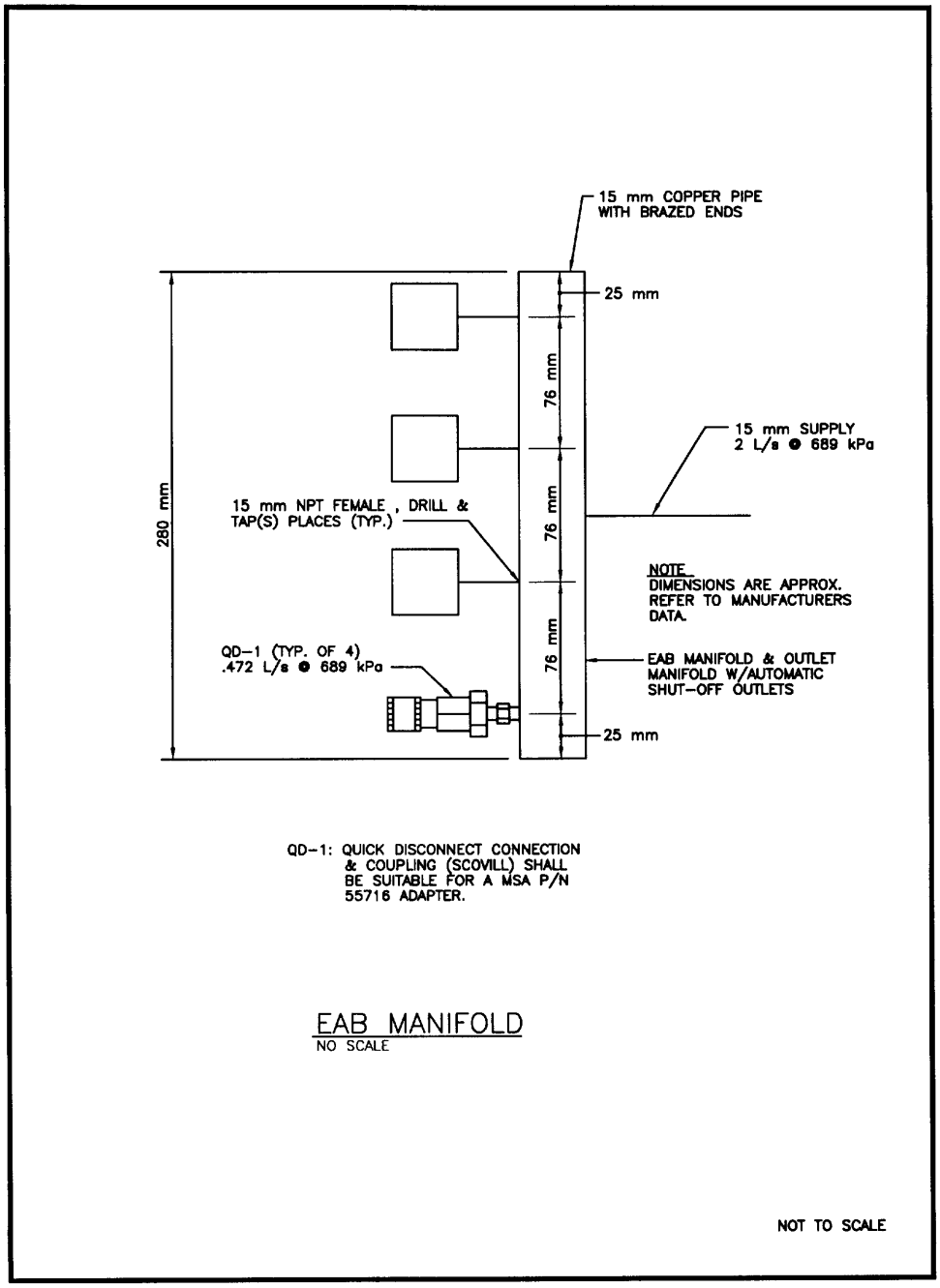

Figure G-13B

EAB SYSTEM SCHEMATIC

APPENDIX G (Continued)

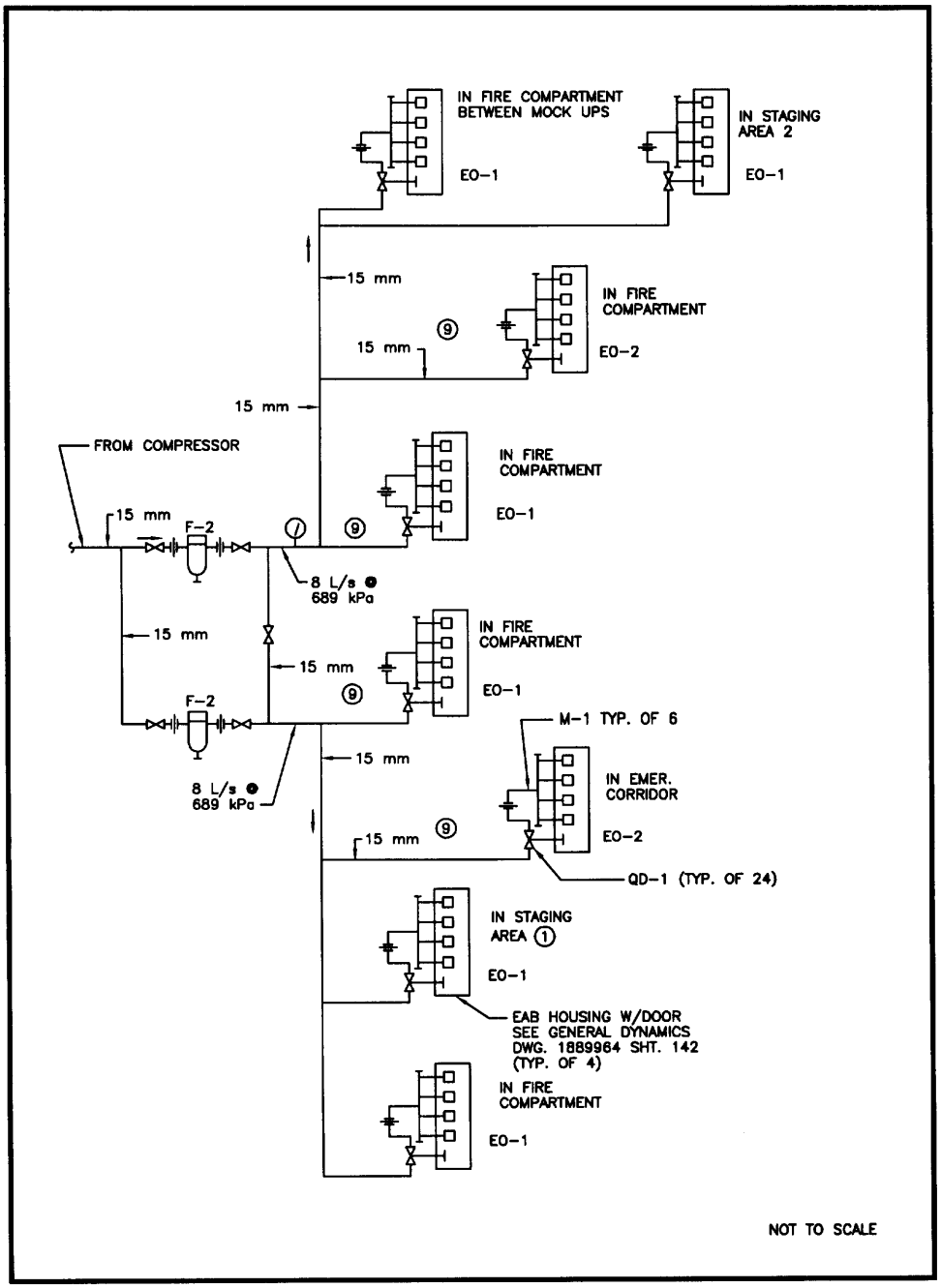

Figure G-13C
EAB SYSTEM SCHEMATIC

NOTES

S (1) THE ENTIRE SYSTEM SHALL BE HYDROSTATICALLY TESTED TO 1034 kPa. NO LEAKAGE ALLOWABLE.

D (2) ALL VALVES AT EAB MANIFOLD SHALL BE COLOR CODED TAN.

C (3) HIGH POINT VENTS AND LOW POINT DRAINS SHALL BE PROVIDED AND SHOWN ON DWGS.

D (4) SYSTEM SHALL WORK WITH THE FOLLOWING DEMAND RESPIRATORS AND REGULATORS:

RESPIRATOR: .472 L/s.
MSA NO. C978315 OR SAC NO. 25901
MSA: MINE SAFTEY APPLANCE. OR
SAC: SCOTT AVIATION CORP.
REGULATOR: .472 L/s
MSA NO: C981070
SAC NO: 25900
HOSE: 2438 mm RUBBER
MSA NO: 85570
MALE ADAPTER MSA P/N 55716

D S (5) PIPING SHALL BE CLEANED TO REMOVE GREASE, OIL, FLUX,& FOREIGN OR LOOSE PARTICLES. THE SYSTEM SHALL BE CLEANED SO THAT THE BREATHING AIR FROM THE SYSTEM MEETS FED. SPEC. BB-A-1043A & AM.#1. SOURCE II. GRADE D.

D S (6) SYSTEM SHALL BE DESIGNED TO MEET THE FOLLOWING: FED. SPEC. BB-A-1034A & AM#1 GRADE D ANSI Z 86.1 & COMPRESSED AIR AND VACUUM SYSTEMS NFGS 15403 NON-FLAMMABLE MEDICAL GAS SYSTEM.

(7) SYSTEM IS TESTED TWICE PER YEAR PER FED. SPEC.

C (8) 241 kPa MIMINUM POTABLE WATER REQUIRED AT COMPRESSOR FOR SEALS. 34 kPa MIMINUM RECIRCULATED WATER REQUIRED AT COMPRESSOR.

C (9) EAB PIPING TO EAB MANIFOLDS IN EMERGENCY COORIDORS & FIRE COMPARTMENTS SHALL BE ROUTED BELOW THE EMERGENCY COORIDOR FLOOR IN THE CRAWL SPACE.

D (10) THE EAB SYSTEM SHALL BE DESIGNED USING THIS SCHEMATIC AS A GUIDE. THE DESIGNER SHALL PREPARE DETAILED DESIGN AND DRAWINGS OF THE EAB SYSTEM INCLUDING A DWG. SHOWING THE SCHEMATIC AND ALL CONTROLS.

(11) EAB SYSTEM SHALL BE TESTED AND CERTIFIED BY THE EFD IN ACCORDANCE TO FED SPEC.

Figure G-13D
EAB SYSTEM SCHEMATIC

APPENDIX G (Continued)

PIPING LEGEND

	POTABLE WATER–COPPER
	AIR GAPE FUNNEL
	GATE VALVE–BRONZE FED. SPEC. WW–V–54, CLASS 150
	GLOBE VALVE–BRONZE FED. SPEC. WW–V–51, CLASS 150
	CHECK VALVE–BRONZE
S	ELECTRIC SOLENOID VALVE–BRONZE CLASS 150
	UNION
	ORIFCE UNION–BRONZE
	STRAINER–BRONZE
	AIR PIPING–COPPER ASTM B55, TYPE K
	RELIEF VALVE–BRONZE
	QUICK DISCONNECT QD–1
T	BALL FLOAT TRAP
/	PRESSURE GAUGE
PS	PRESSURE SWITCH

Figure G–13E
EAB SYSTEM SCHEMATIC

APPENDIX G (Continued)

REVISION CHANGES

MOVED SOLENOID VALVE
ADDED 2 EO-1 STATIONS
ADDED NOTE 11
CHANGED NOTE 6
ADDED AIR PURIFIER

EQUIPMENT SCHEDULE

NO.	DESCRIPTION	REFERENCE	SOURCE OF SUPPLY
F-1	SEPARATOR W/ FLOAT VALVE DRAIN TRAP		COMMERICAL-NASH *
F-2	15 mm AIR FILTER W/1 PARTICULATE FILTER 0.3 MICRON @ 99.7% & 2 ORGANIC CHARCOAL FILTERS 0.108 L/s CAPACITY		COMMERICAL-MINE SAFETY APPLIANCE CO.
S-1	SEPARATOR W/ FLOAT VALVE		COMMERICAL-NASH *
C-1	COMPRESSOR - 23 L/s, 689 kPa 245 KW, 3500 Mg/kg MOTOR		COMMERICAL-NASH, MODEL OC-5C UNIT *
QD-1	QUICK DISCONNECT CONNECTION & COUPLEING SHALL BE SUITABLE FOR A MALE ADAPTER (MSA P/N 55716) USED ON M-1		COMMERICAL-SCOVILL
M-1	FOUR OUTLET MANIFOLD ASSEMBLY (EAB MANIFOLD)		COMMERICAL-SCOTT AVIATION CORP.
EO-1	M-1 IN RECESSED CABINET		COMMERICAL-PROVIDE W/ DOOR
EO-2	M-1 W/O CABINET		COMMERICAL

*THE EAB COMPRESSOR UNIT SHALL BE AN OIL-LESS, SINGLE-STAGE, POSITIVE DISPLACEMENT, NON-PULSATING, LIQUID RING TYPE: NAS-ENGINEERING CO. MODLE OC-5C OR EQUAL.

D EAB EQUIPMENT:(GOVERMENT FURNISHED)

MINE SAFETY APPLIANCE CO. MODEL 85570, 2438 mm LONG RUBBER LONG WITH DEMAND REGULATOR 0.472 L/s REDUCES AIR PRESSURE FROM 689 kPa TO 14 kPa & DEMAND FLOW RESPIRATOR WITH ALL VISION FACE PIECE, 0.472 L/s @ 14 kPa

NOTE LEGEND

D- NOTES FOR APPLYING TO DWG
S- NOTE FOR SPECIFICATION REQUIREMENT
C- DESIGN COMMENTS FOR DESIGNER

Figure G-13F

EAB SYSTEM SCHEMATIC

APPENDIX G (Continued)

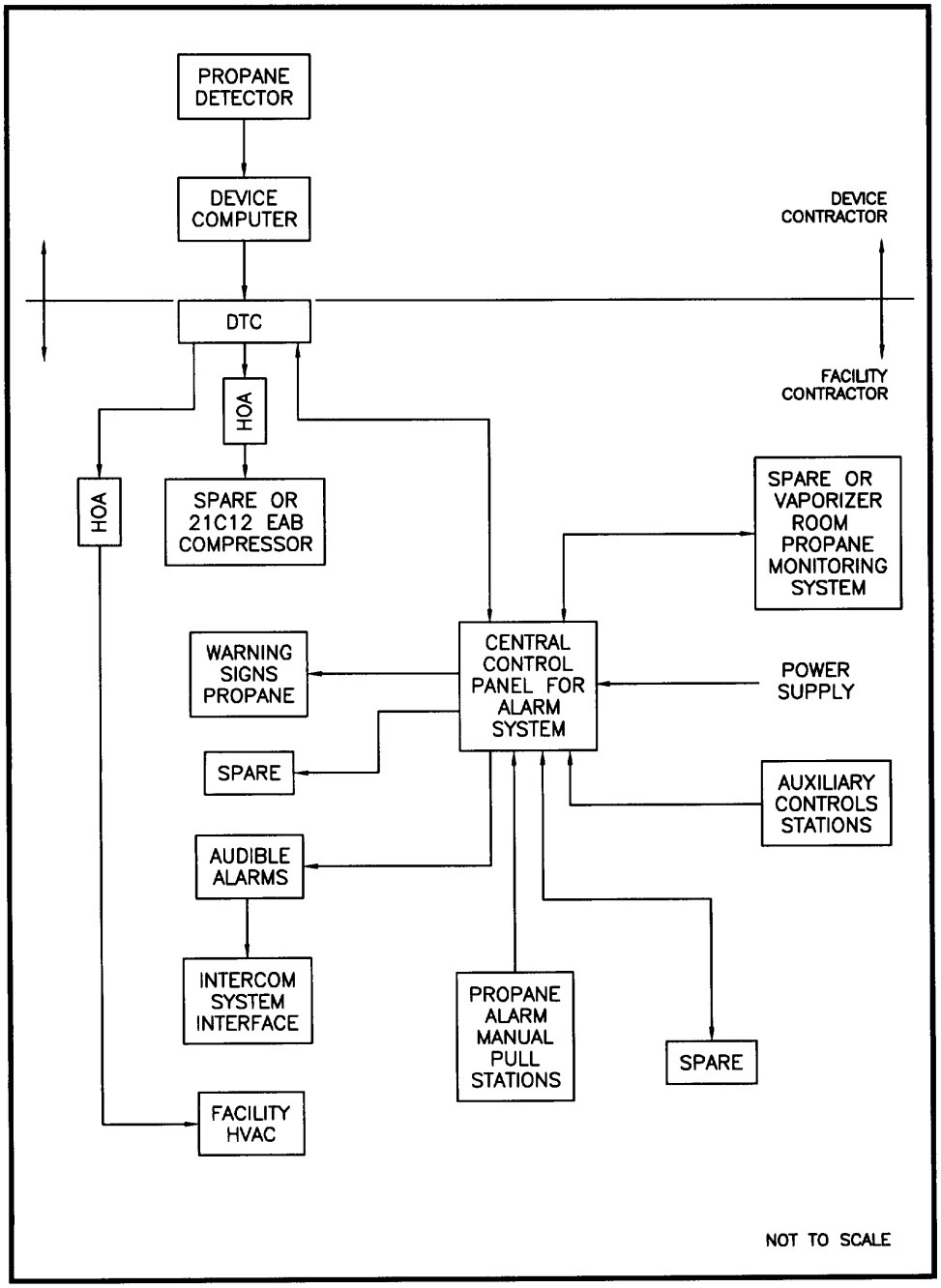

Figure G–14

21C12/21C12A – ALARM SYSTEM SCHEMATIC

APPENDIX H
GAS CHAMBER

Gas Chamber Gas Mask Wall Storage H-1
Gas Chamber Floor Plan H-2

APPENDIX H (Continued)

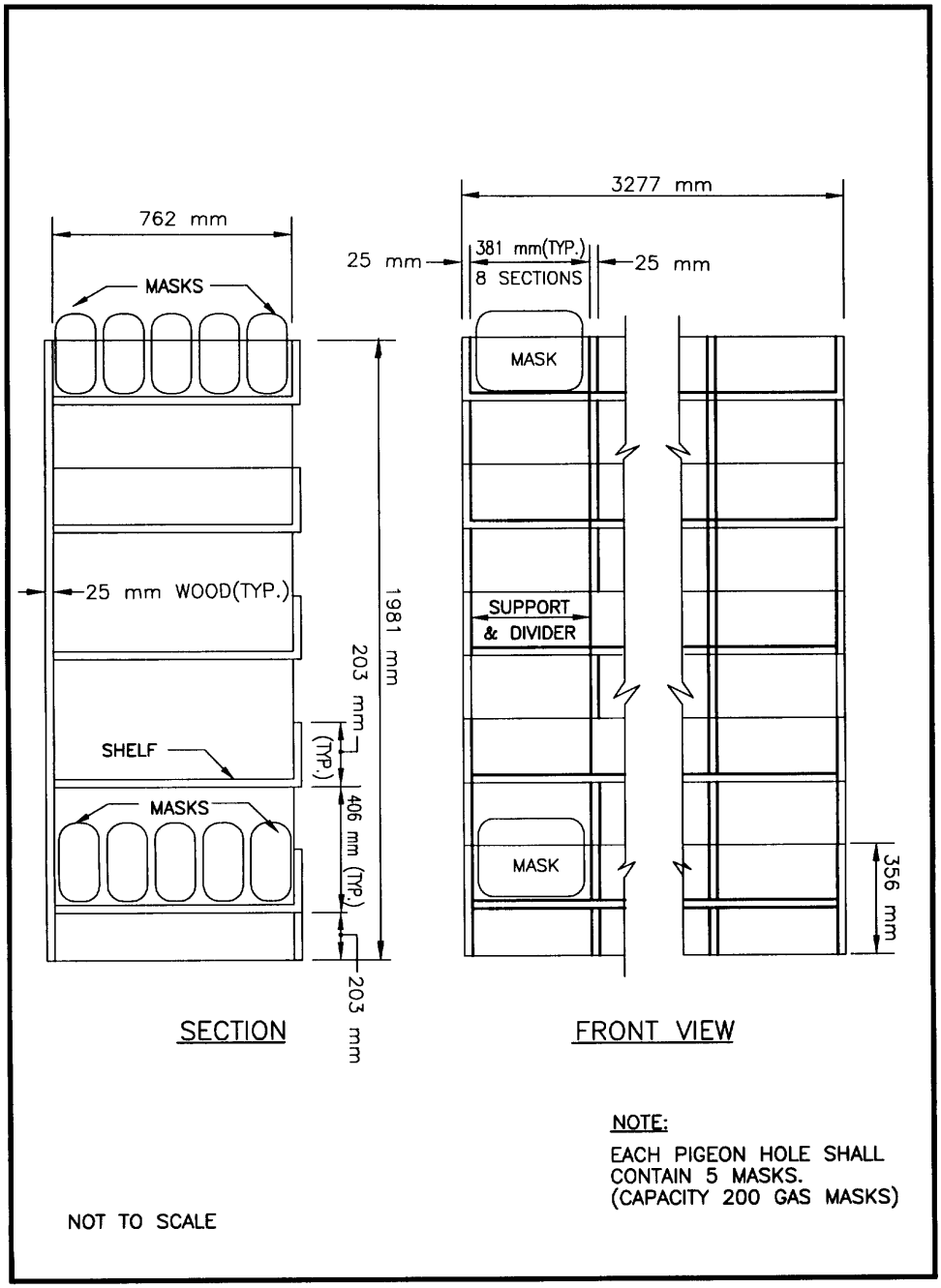

Figure H–1
Gas Chamber Gas Mask Wall Storage

APPENDIX H (Continued)

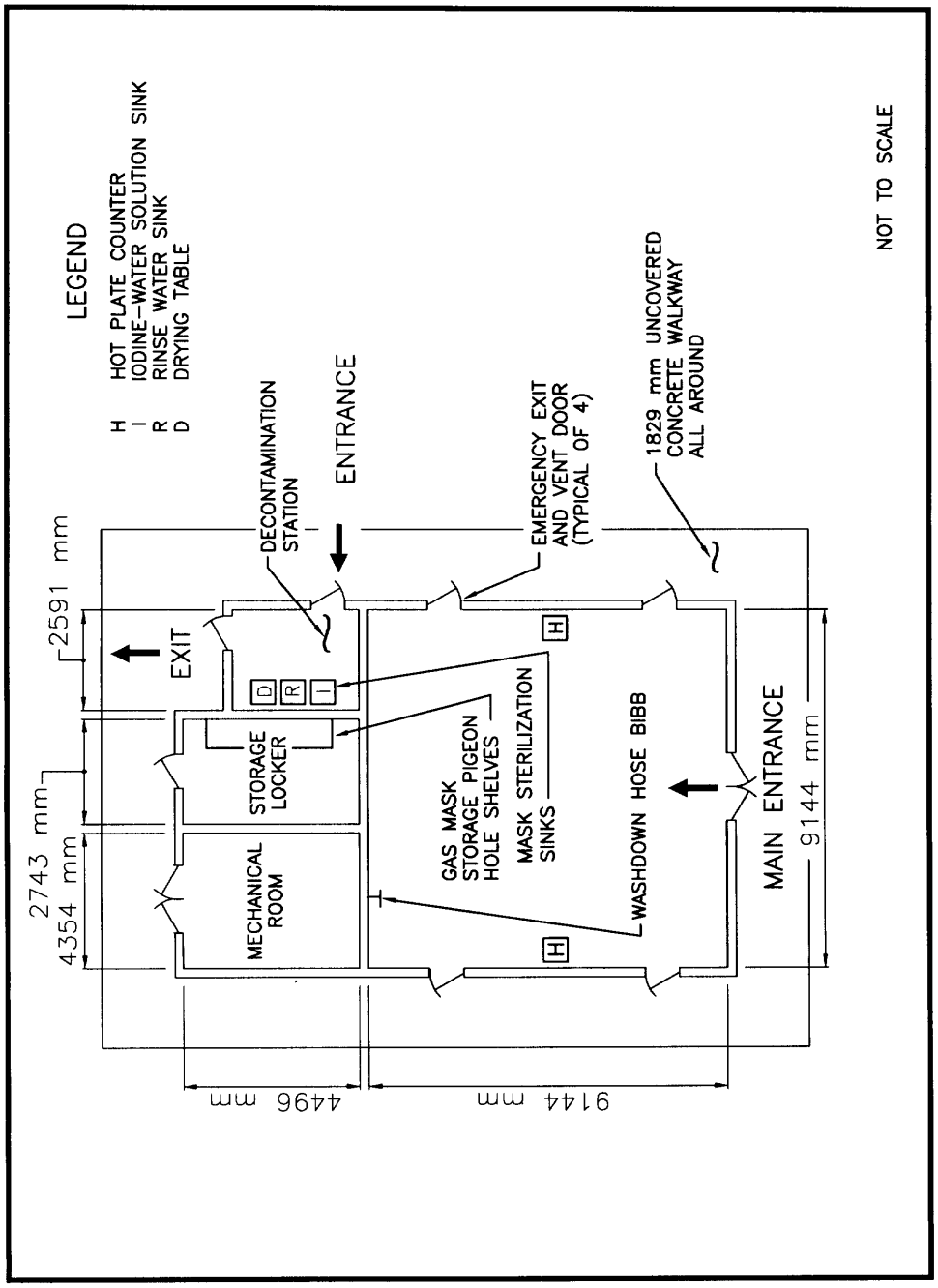

Figure H-2
Gas Chamber Floor Plan

APPENDIX I
CO_2

21C12/21C12A	CO_2 Bulk Tank Details	I-1
21C12/21C12A	CO_2 Schematics	I-2
21C12/21C12A	CO_2 Schematics	I-3
21C12/21C12A	CO_2 Manual Extinguisher Fill Pump	I-4
21C12/21C12A	CO_2 Flow Schematic	I-5
21C12/21C12A	CO_2 Wiring Schematic	I-6
21C12/21C12A	CO_2 Legend	I-7

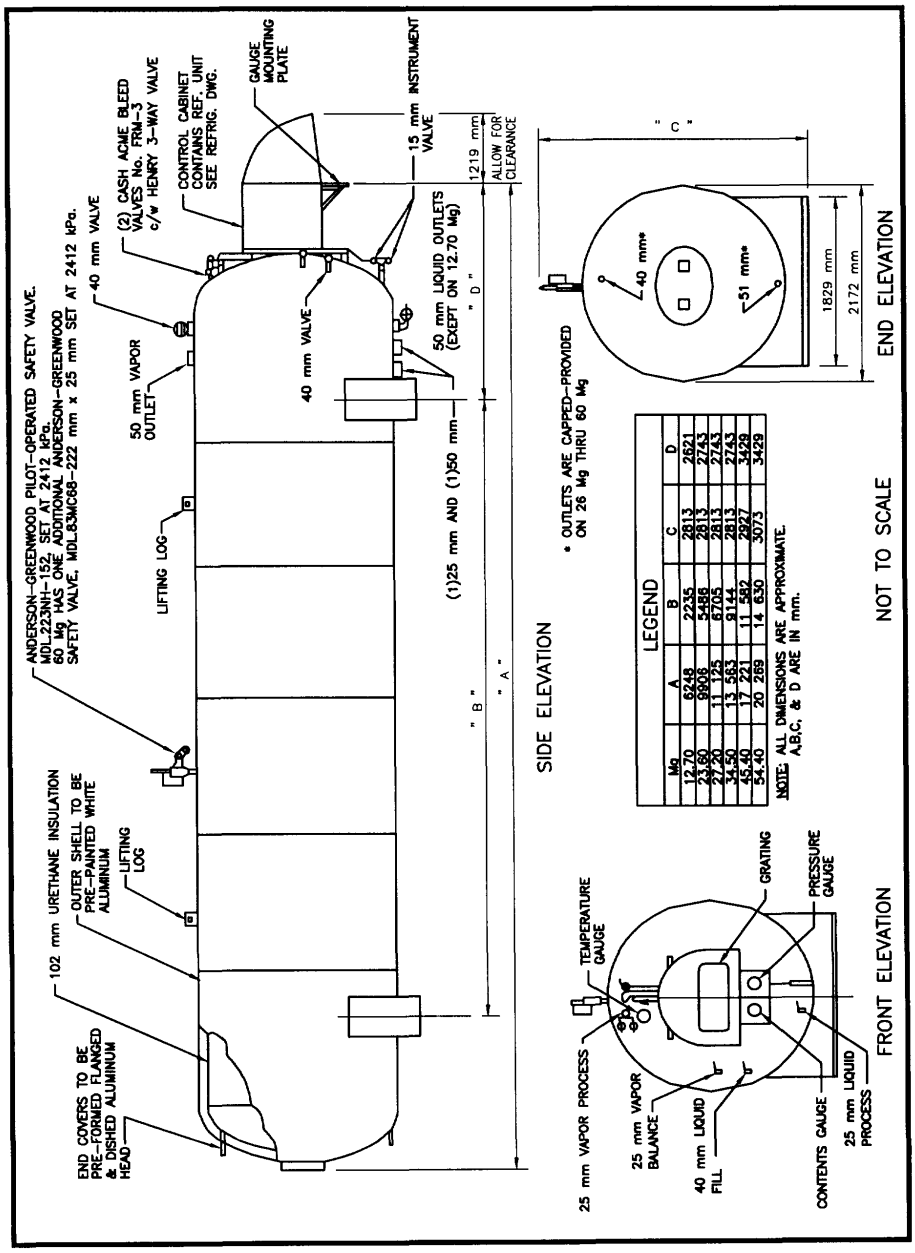

Figure I-1
21C12/21C12A CO_2 Bulk Tank Details

APPENDIX I (Continued)

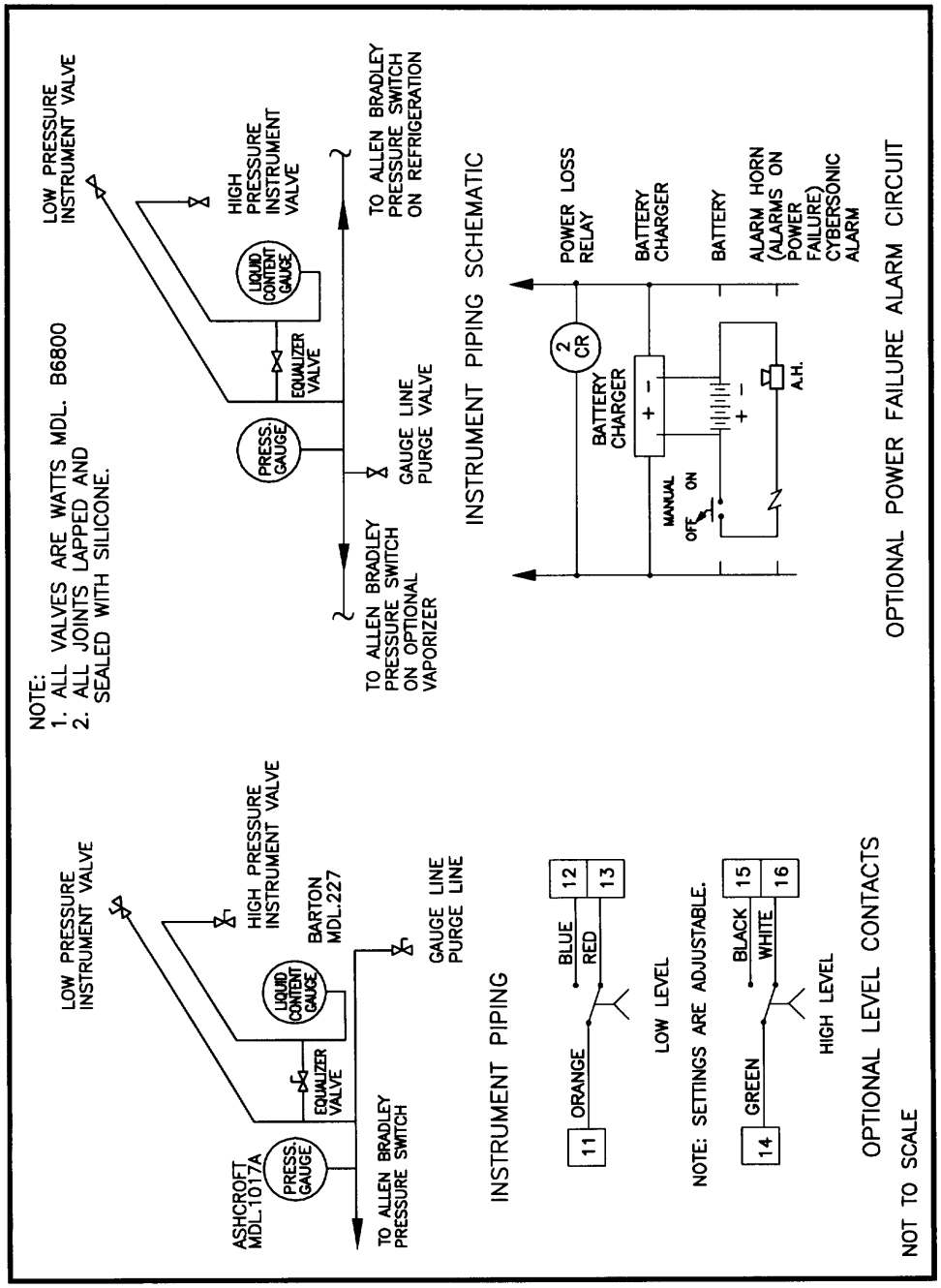

Figure I–2
21C12/21C12A CO_2 Schematics

APPENDIX I (Continued)

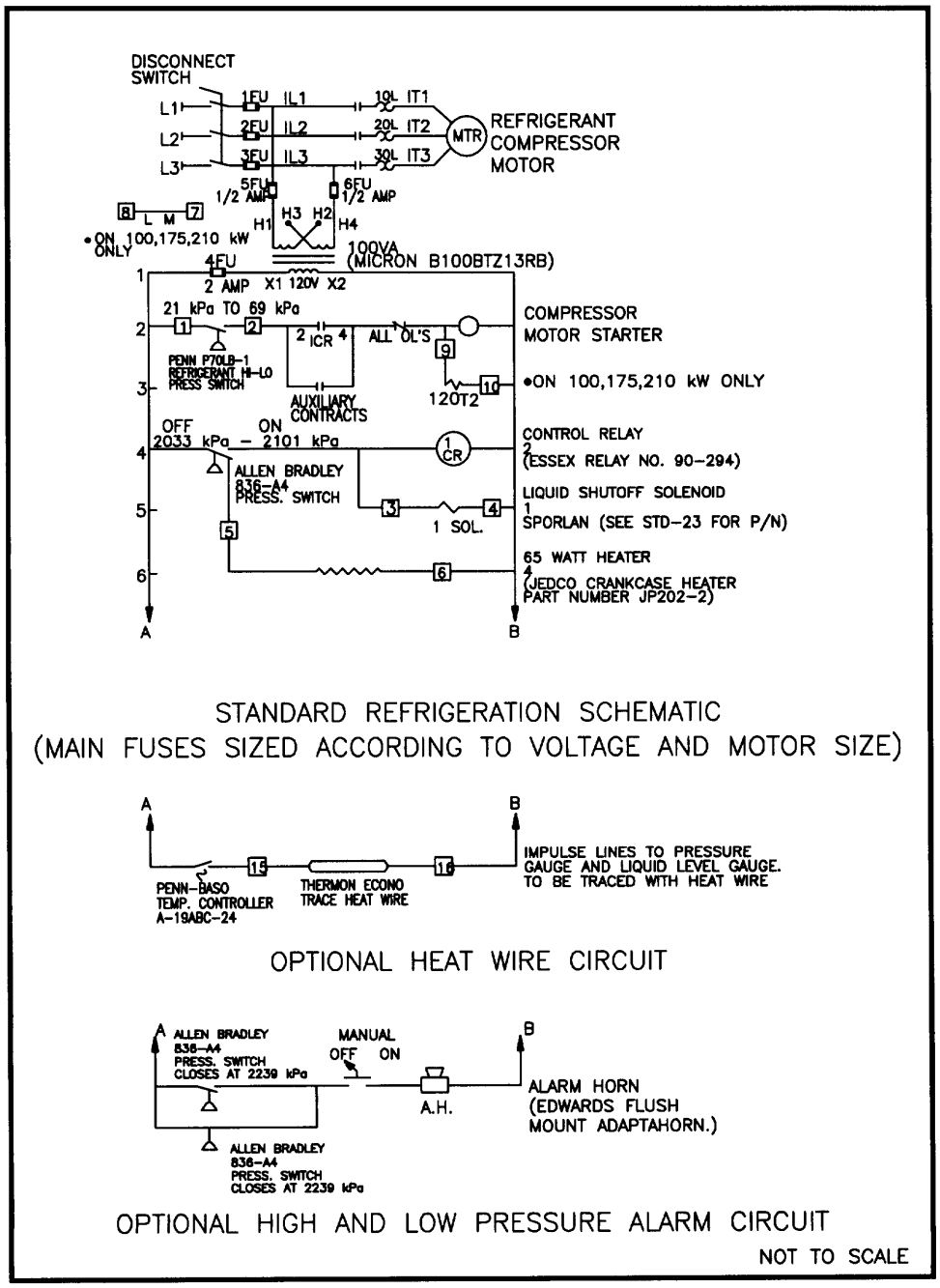

Figure I–3
21C12/21C12A CO_2 Schematics

APPENDIX I (Continued)

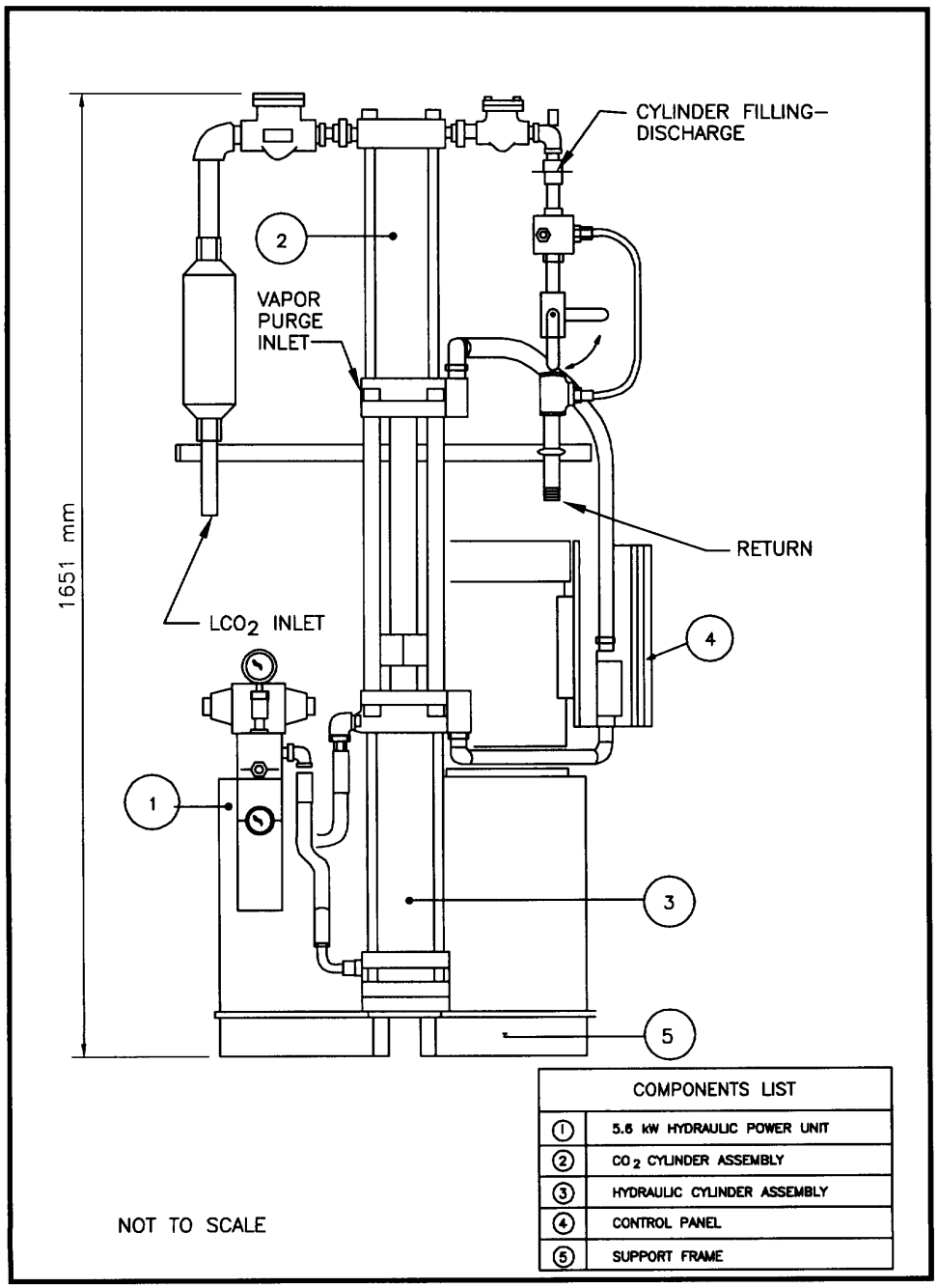

COMPONENTS LIST	
1	5.6 kW HYDRAULIC POWER UNIT
2	CO_2 CYLINDER ASSEMBLY
3	HYDRAULIC CYLINDER ASSEMBLY
4	CONTROL PANEL
5	SUPPORT FRAME

Figure I–4
21C12/21C12A CO_2 Manual Extinguisher Fill Pump

APPENDIX I (Continued)

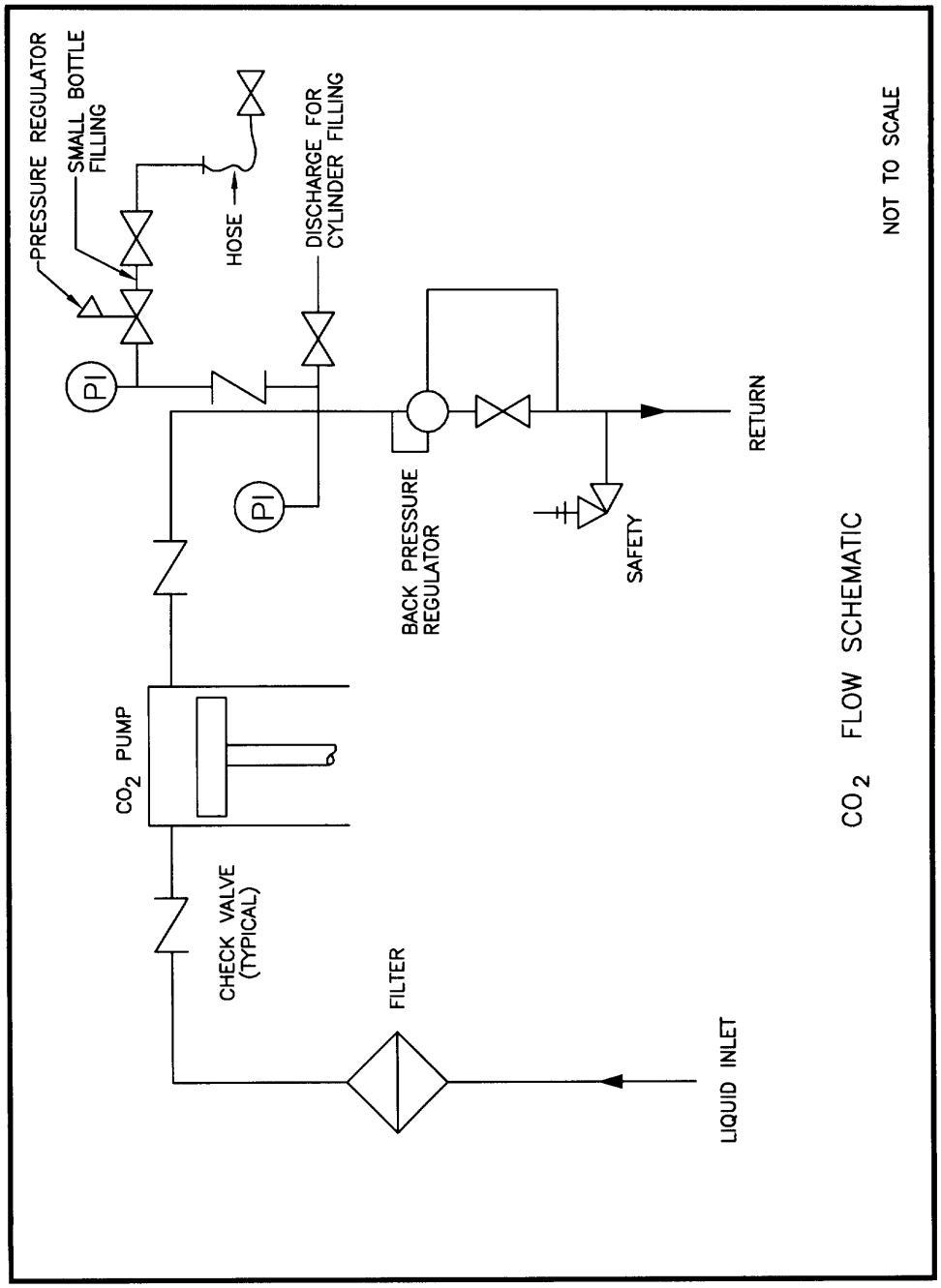

Figure I–5
21C12/21C12A CO_2 Flow Schematic

APPENDIX I (Continued)

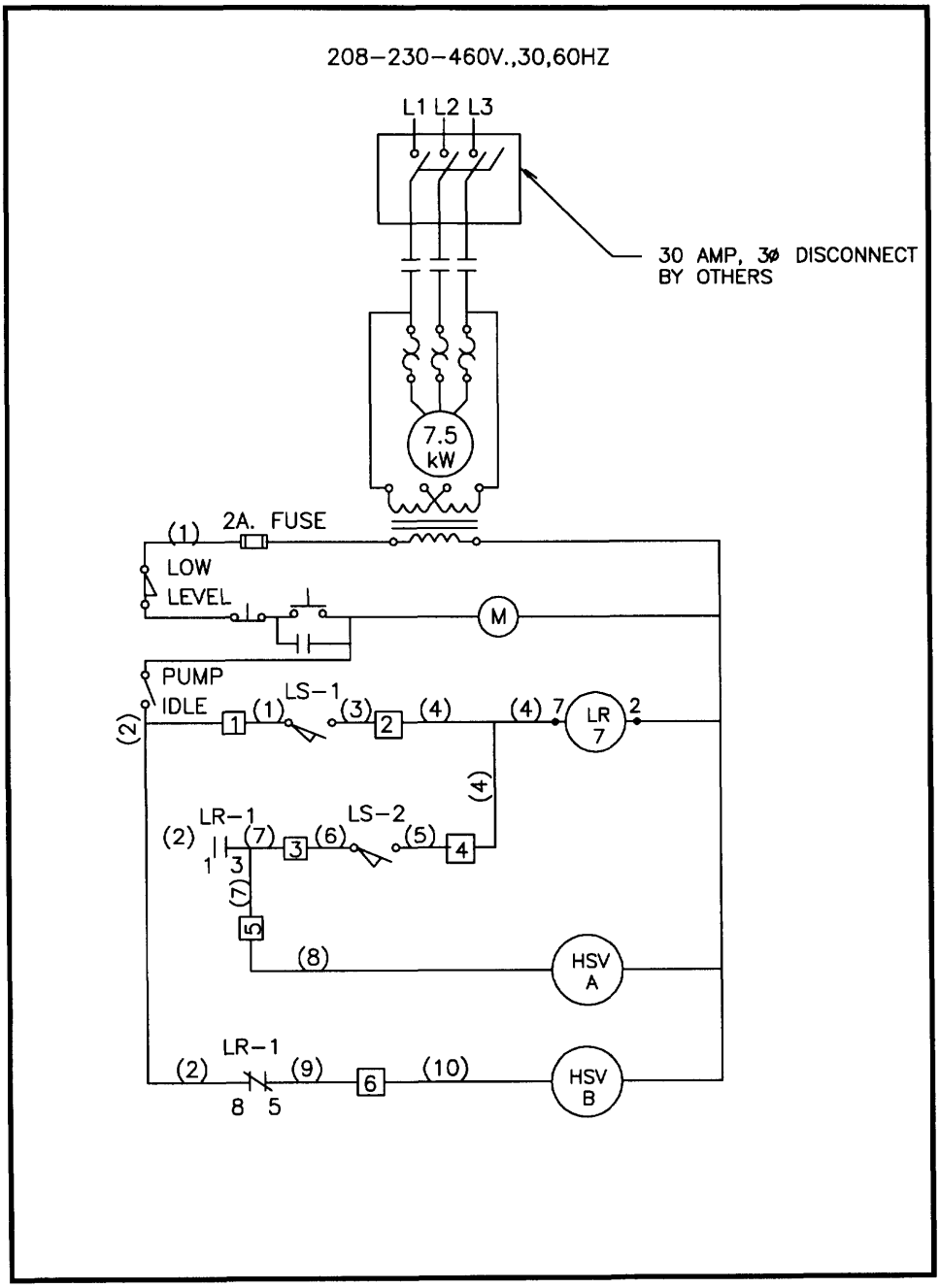

Figure I–6
21C12/21C12A CO_2 Wiring Schematic

APPENDIX I (Continued)

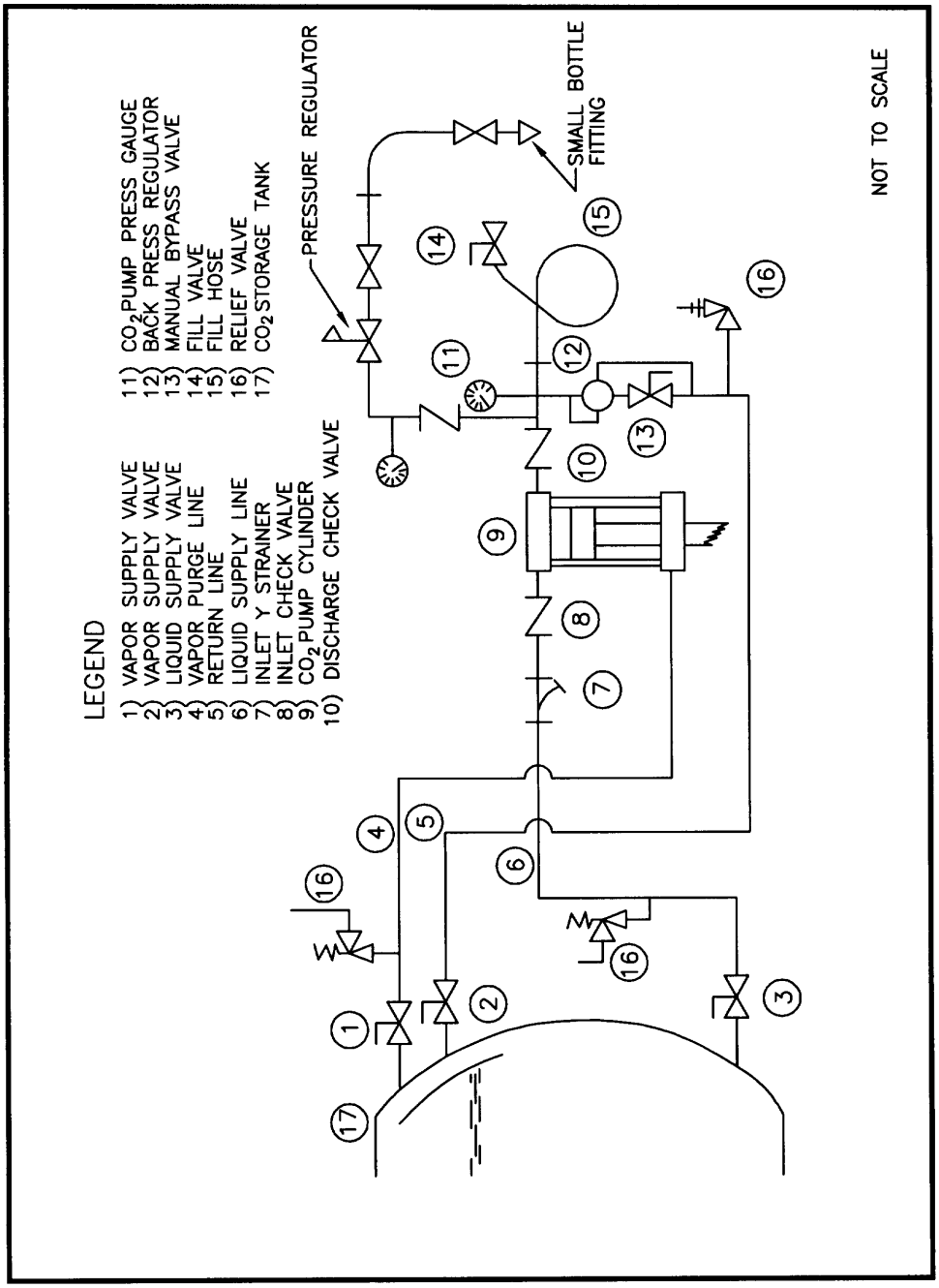

Figure I–7
21C12/21C12A CO_2 Legend

APPENDIX J
PROPANE

Clearance Requirements	J-1
Propane Gas Train at Facility/Device Interface	J-2
Symbol Interpretation/Identification	J-3
Waterbath Vaporizer With Liquid Pump	J-4
Steam Heated Vaporizer With Liquid Pump	J-5
Waterbath Vaporizer Without Liquid Pump	J-6
Steam Heated Vaporizer Without Liquid Pump	J-7

APPENDIX J (Continued)

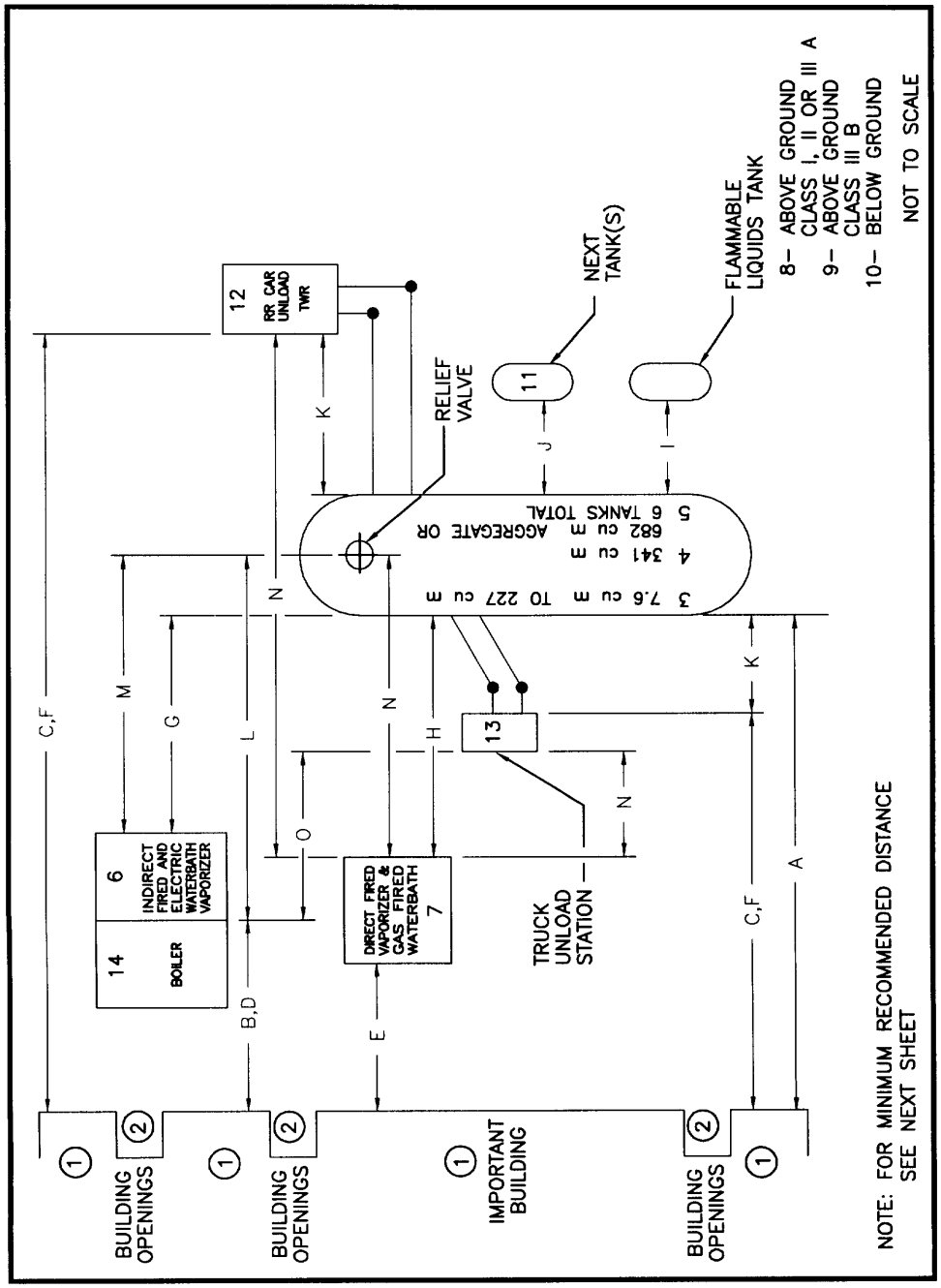

Figure J–1A
Clearance Requirements

APPENDIX J (Continued)

MINIMUM RECOMMENDED DISTANCE		
DIMENSION	POINT TO POINT	DISTANCE, mm
A	1 to 3 [a]	22 860
	4 [a]	45 720
	5 [b]	60 960
	5 [c]	106 680
B	6	6096
C	12	60 960
	13	15 240
D	2 to 6	6096
E	7	15 240
F	12	60 960
	13	22 860
G	3,4,5 to 6	1524
H	7	4572
I	8	30 480
	9	15 240
	10	6096
J	11 [d]	22 860
K	12	22 860
	13	15 240
L	14	22 860
M	6 to 15	15 240
N	7 to 12,13,15 [e]	22 860
O	13 to 14	22 860

NOTES:

a. FOR SINGLE TANKS ONLY. TREAT MULTIPLE TANKS AS NO. 5
b. FOR BUILDINGS WITH HYDRANT PROTECTION.
c. FOR BUILDINGS WITHOUT HYDRANT PROTECTION.
d. 1524 mm FOR TANKS WITHIN A GROUP.
e. FOR TANKS SMALLER THAN 758 L, 7620 mm.

Figure J–1B
Clearance Requirements

APPENDIX J (Continued)

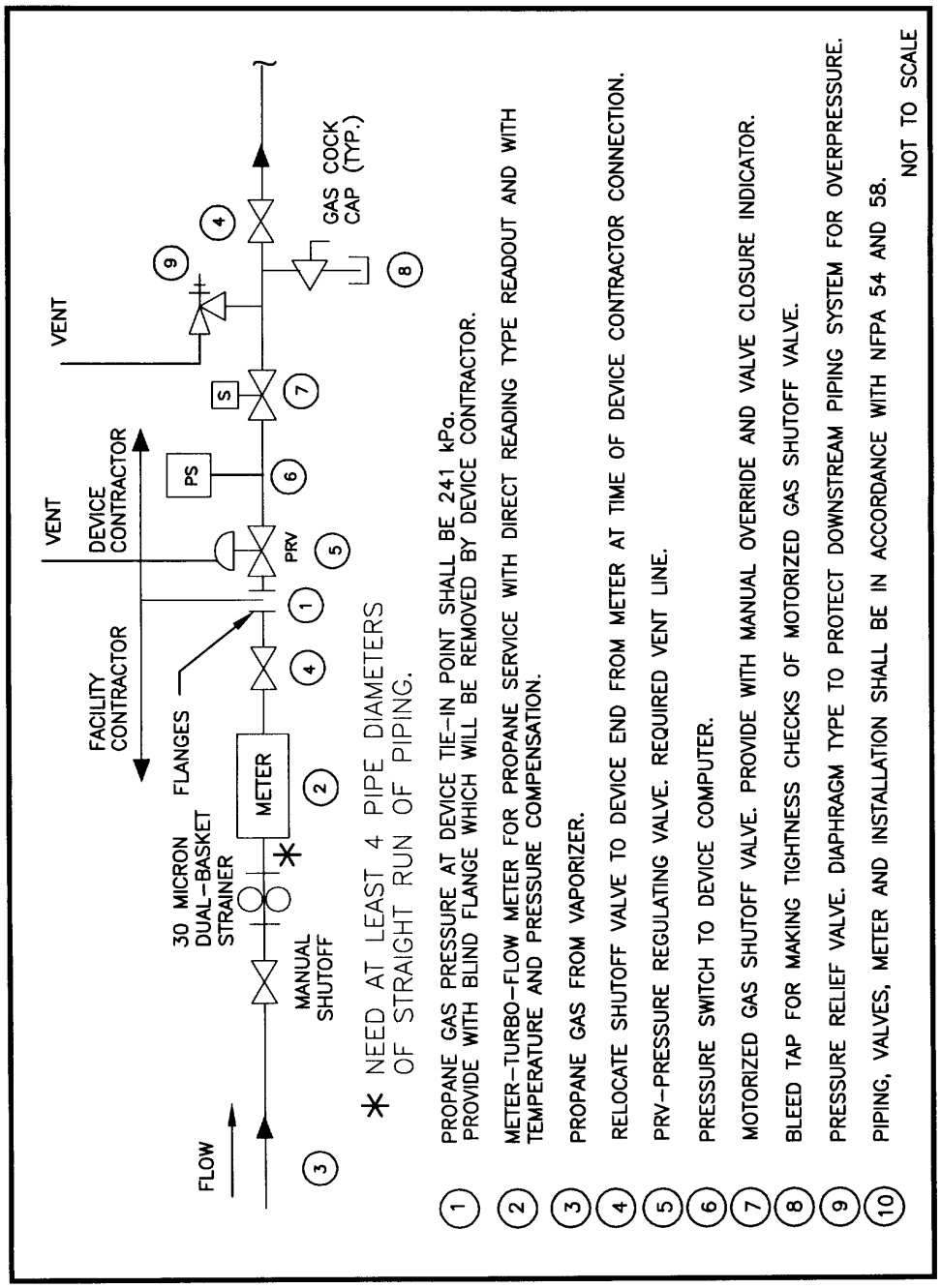

Figure J-2
Propane Gas Train at Facility/Device Interface

APPENDIX J (Continued)

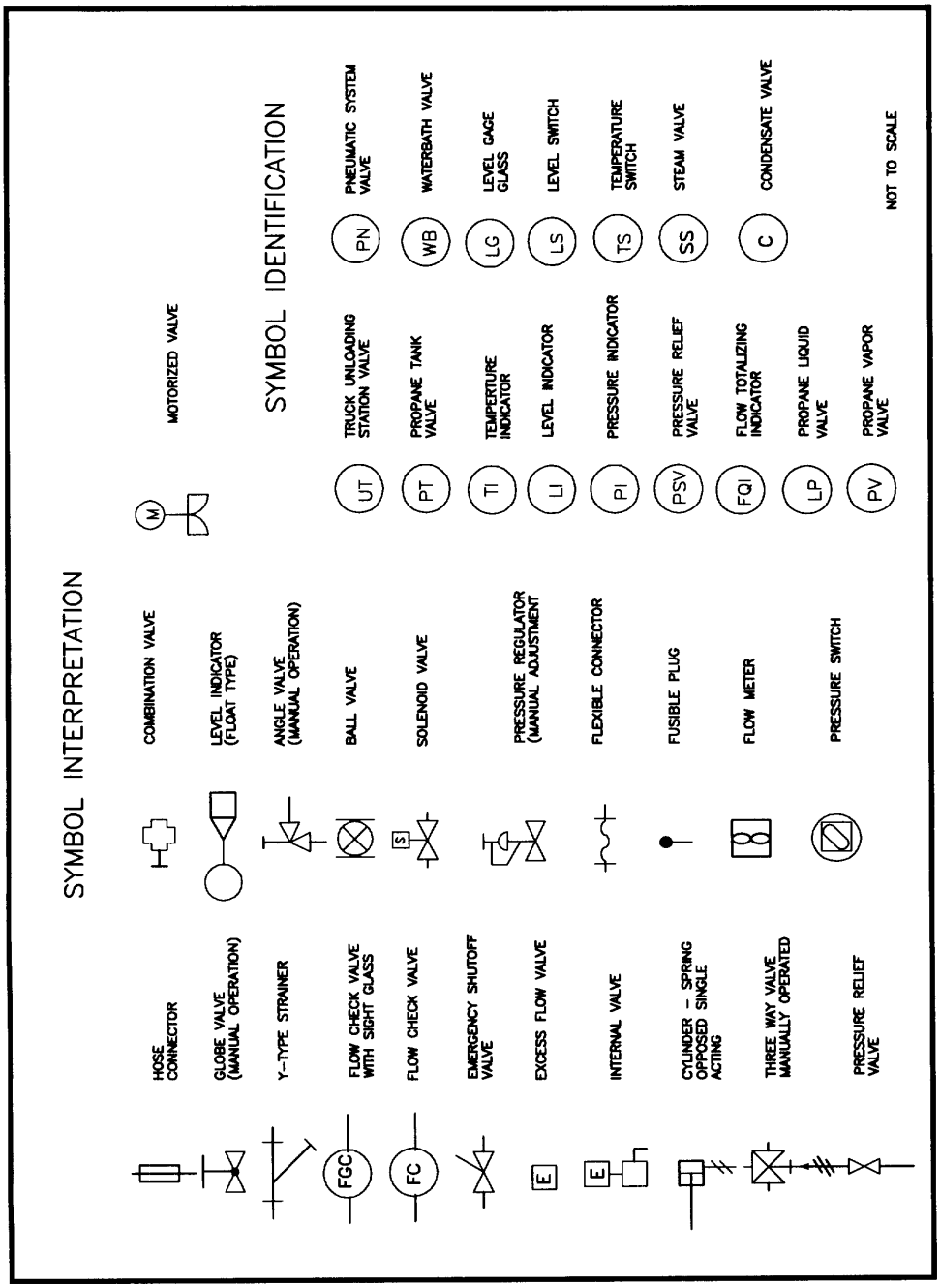

Figure J–3
Symbol Interpretation/Identification

APPENDIX J (Continued)

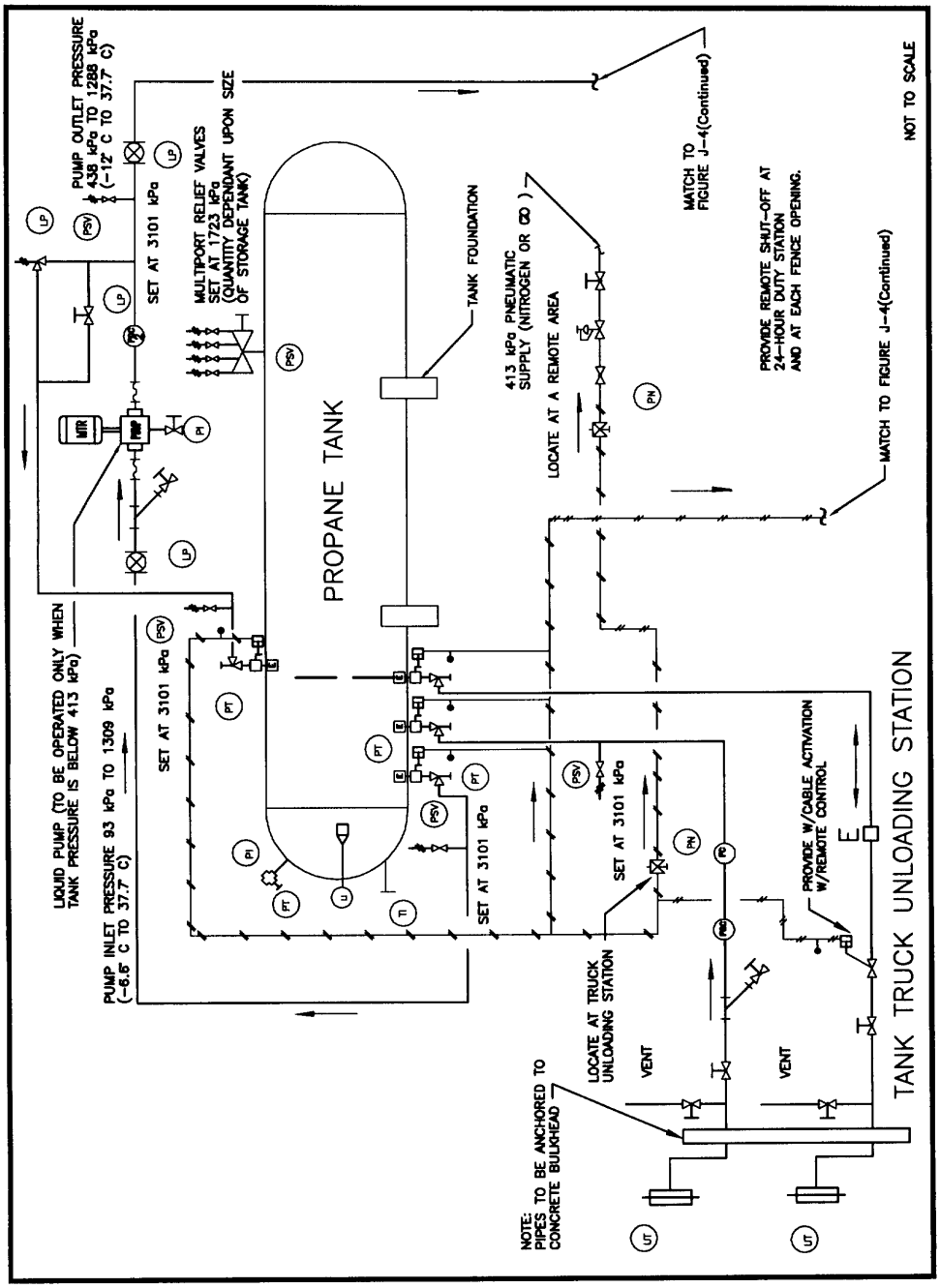

Figure J-4A
Waterbath Vaporizer with Liquid Pump

APPENDIX J (Continued)

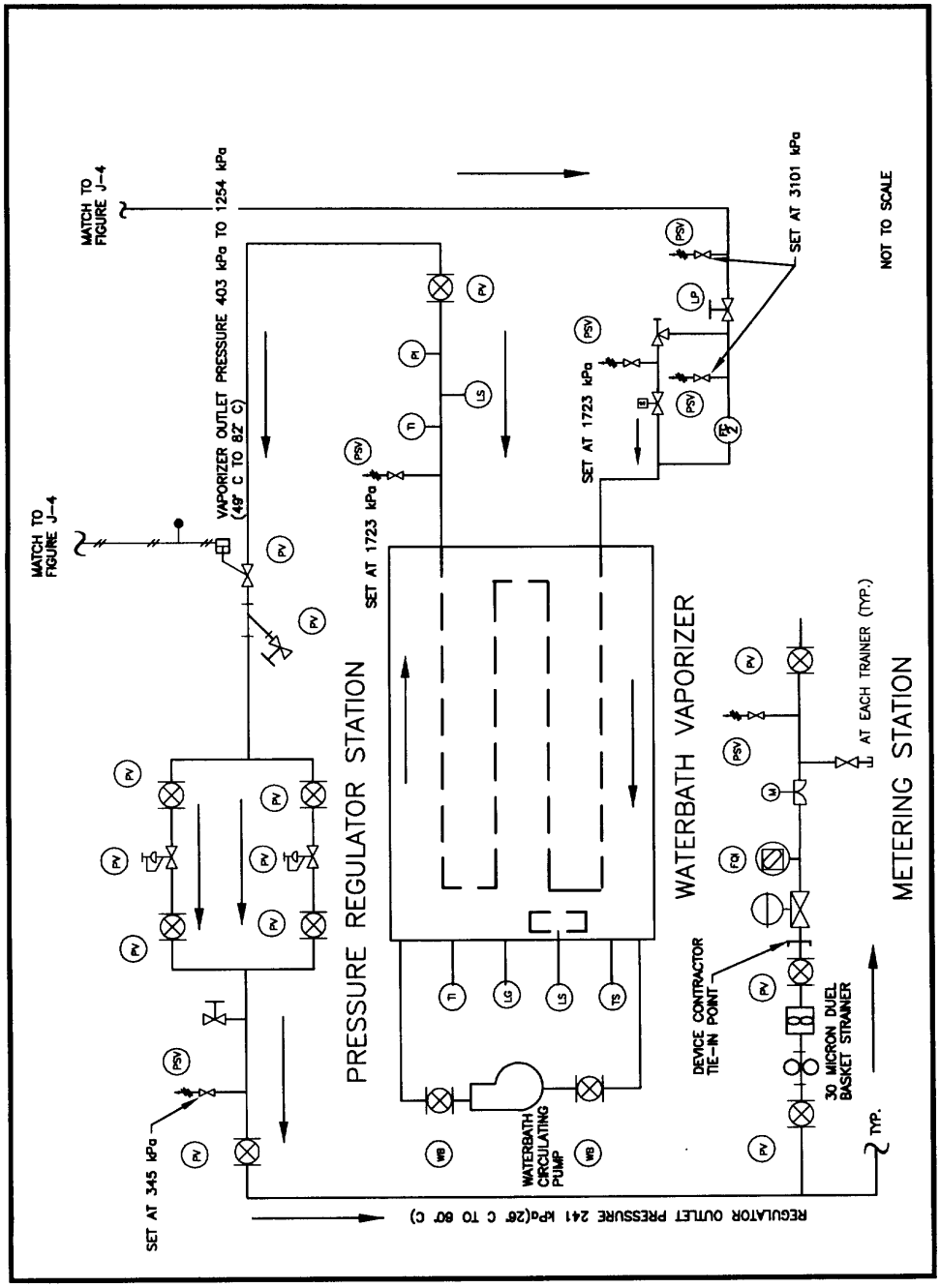

Figure J–4B
Waterbath Vaporizer with Liquid Pump

APPENDIX J (Continued)

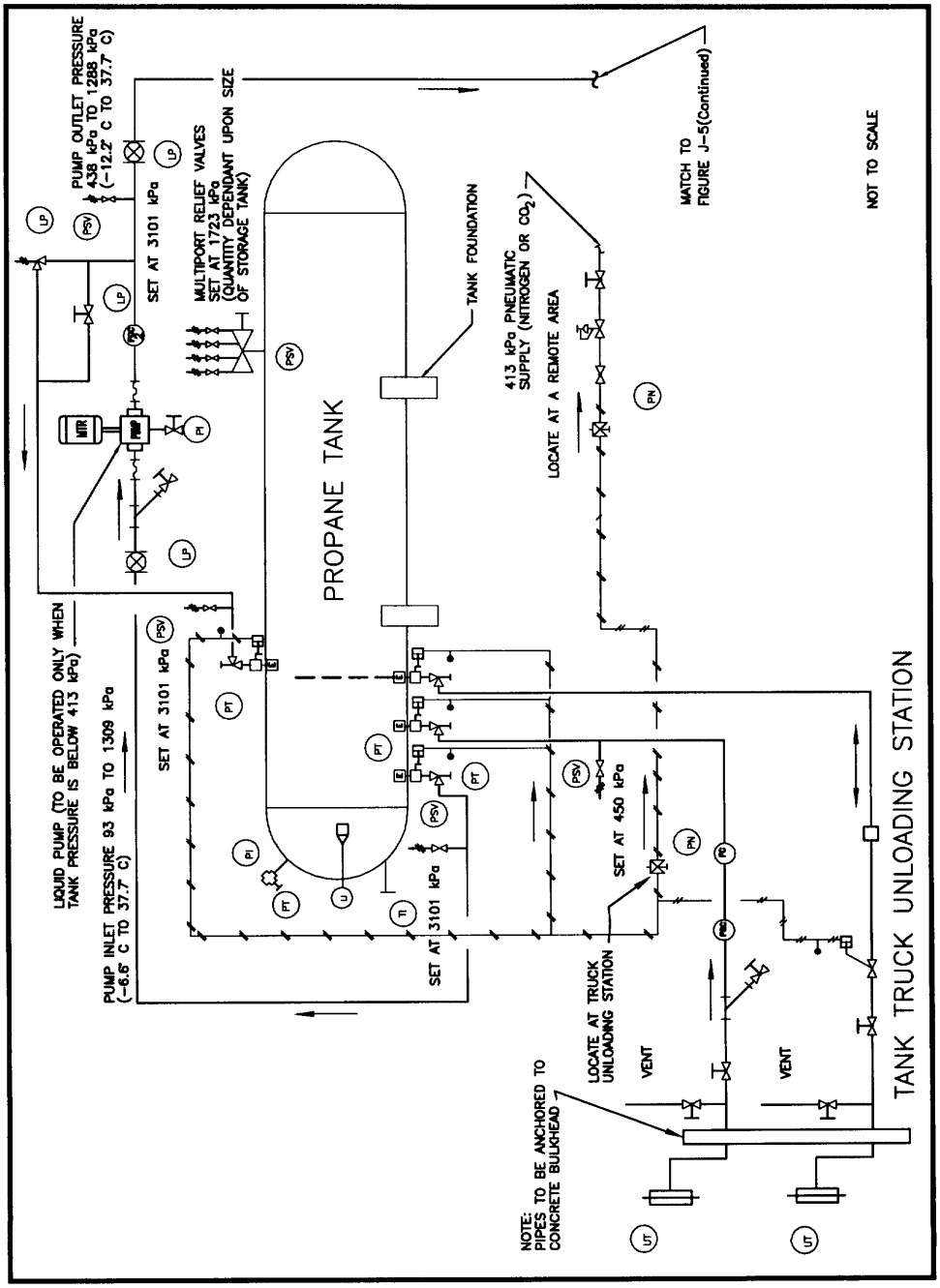

Figure J-5A
Steam Heated Vaporizer with Liquid Pump

APPENDIX J (Continued)

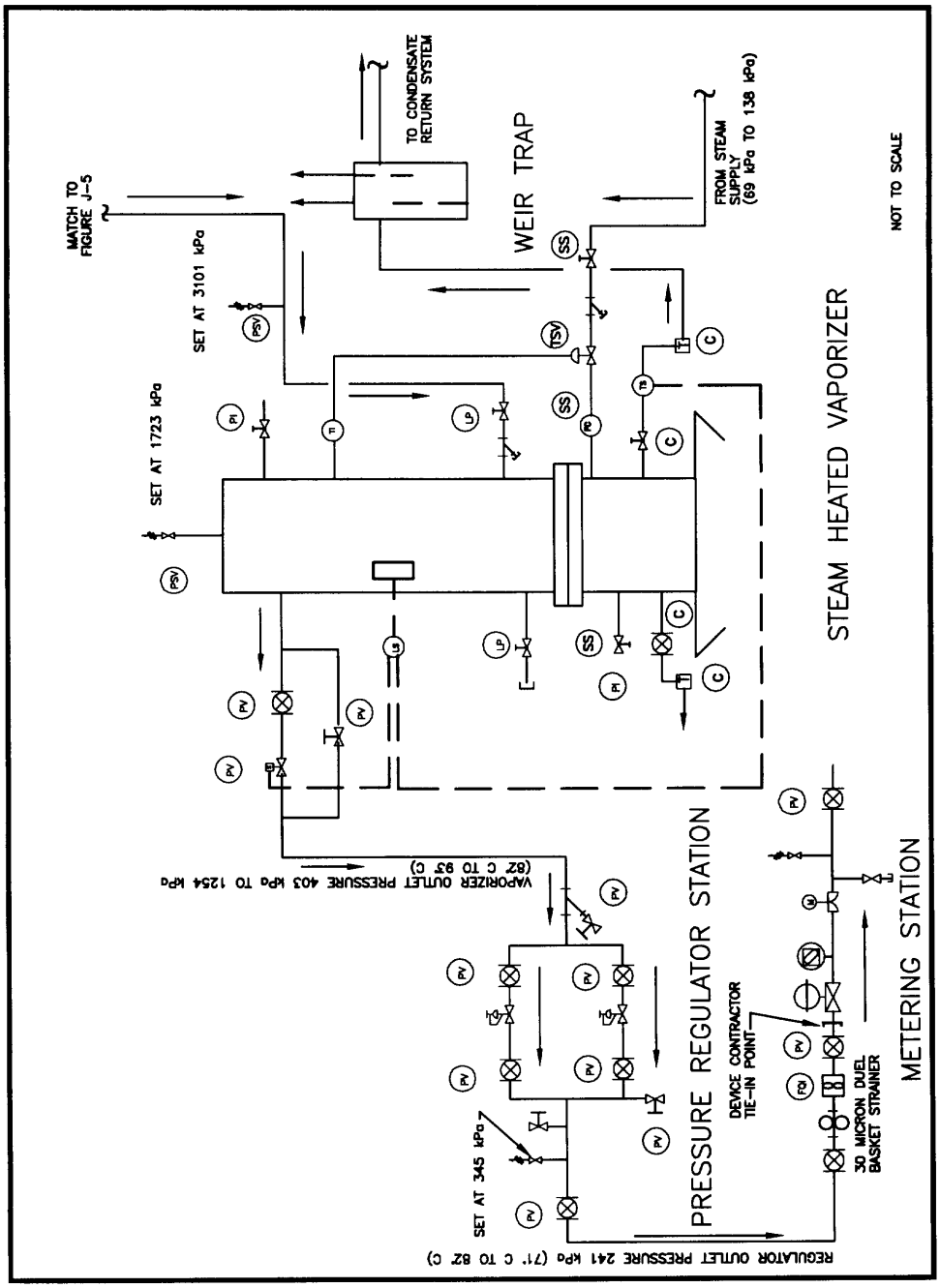

Figure J–5B
Steam Heated Vaporizer with Liquid Pump

APPENDIX J (Continued)

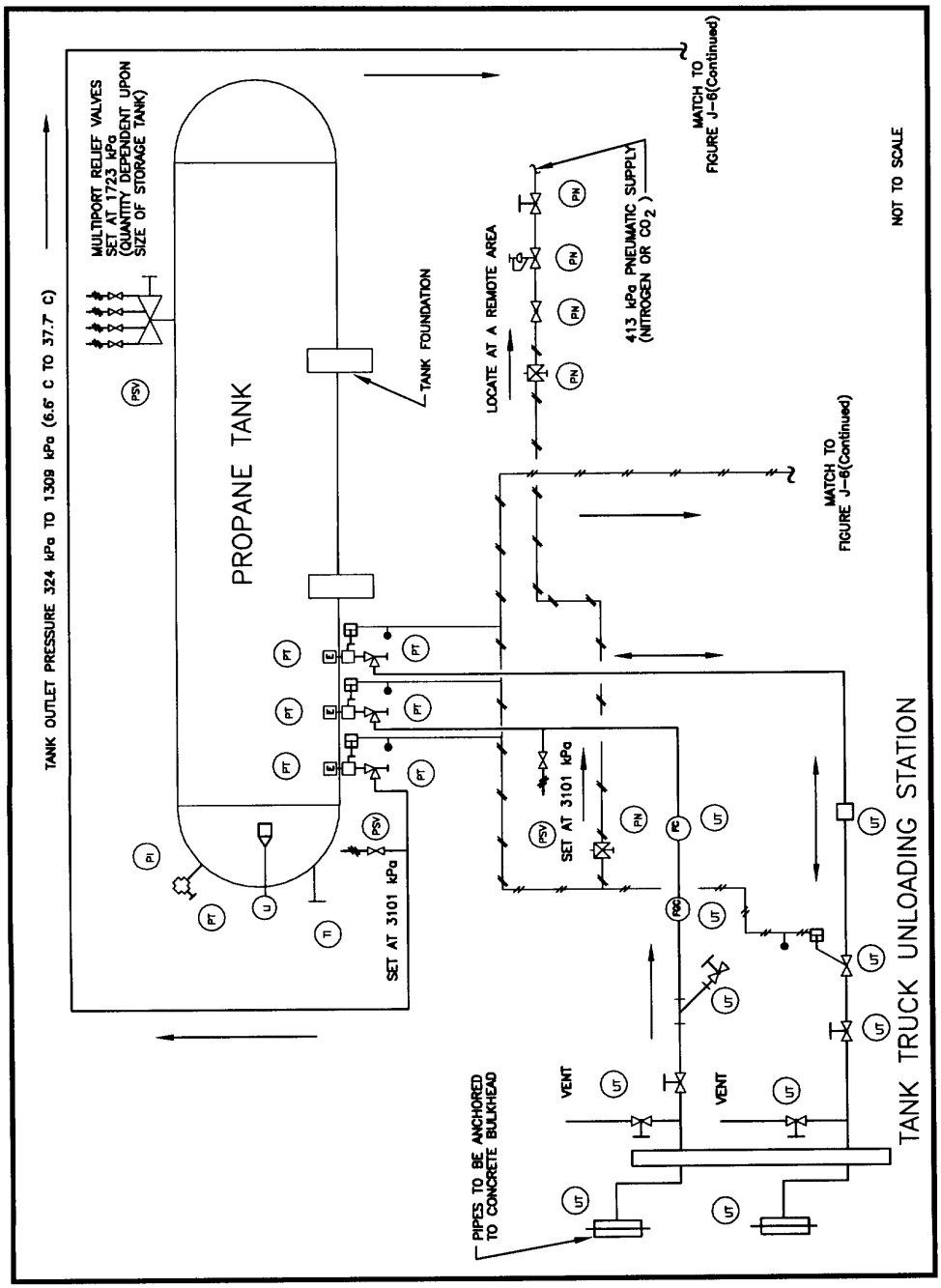

Figure J-6A
Waterbath Vaporizer Without Liquid Pump

APPENDIX J (Continued)

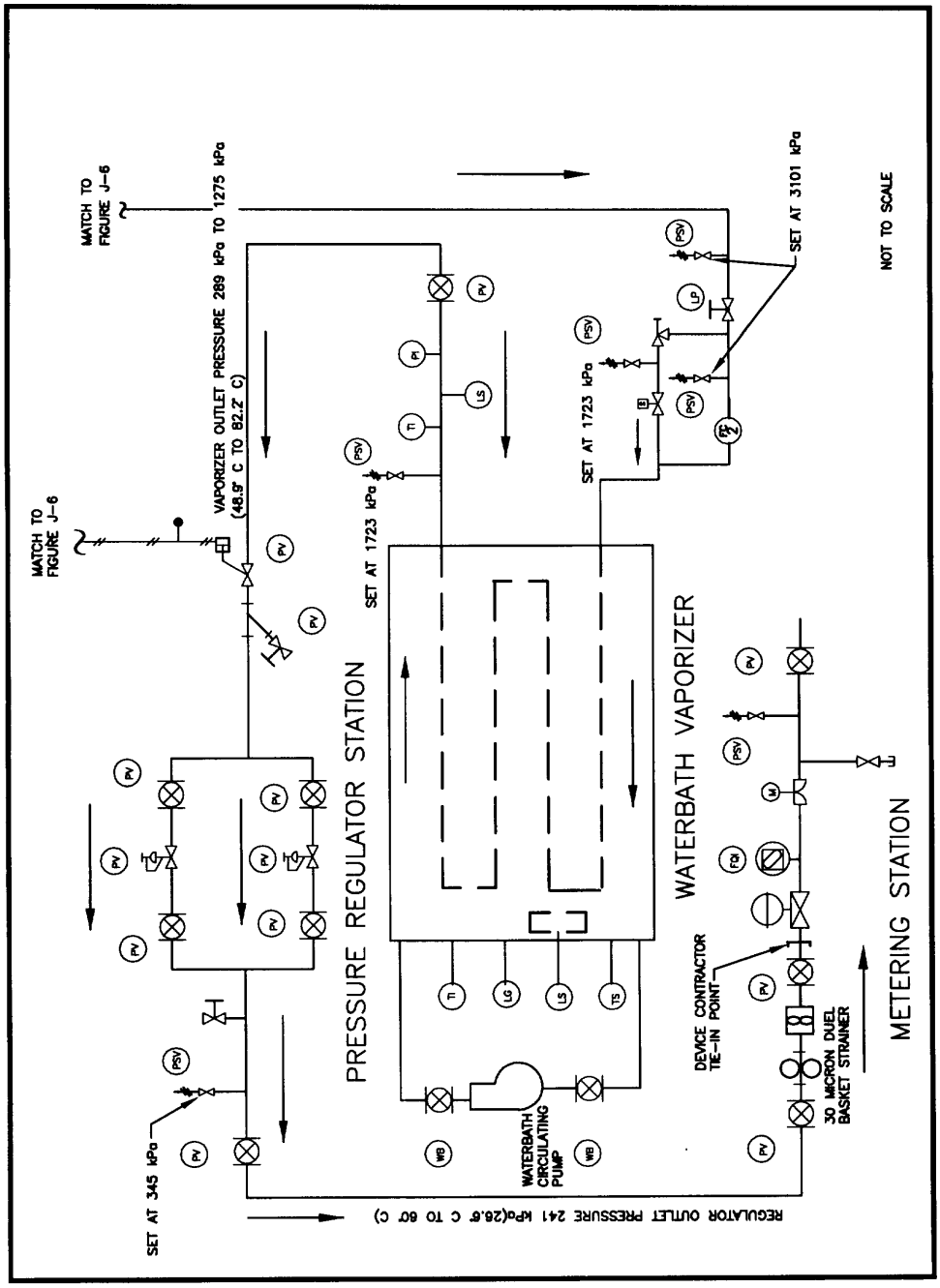

Figure J–6B
Waterbath Vaporizer Without Liquid Pump

APPENDIX J (Continued)

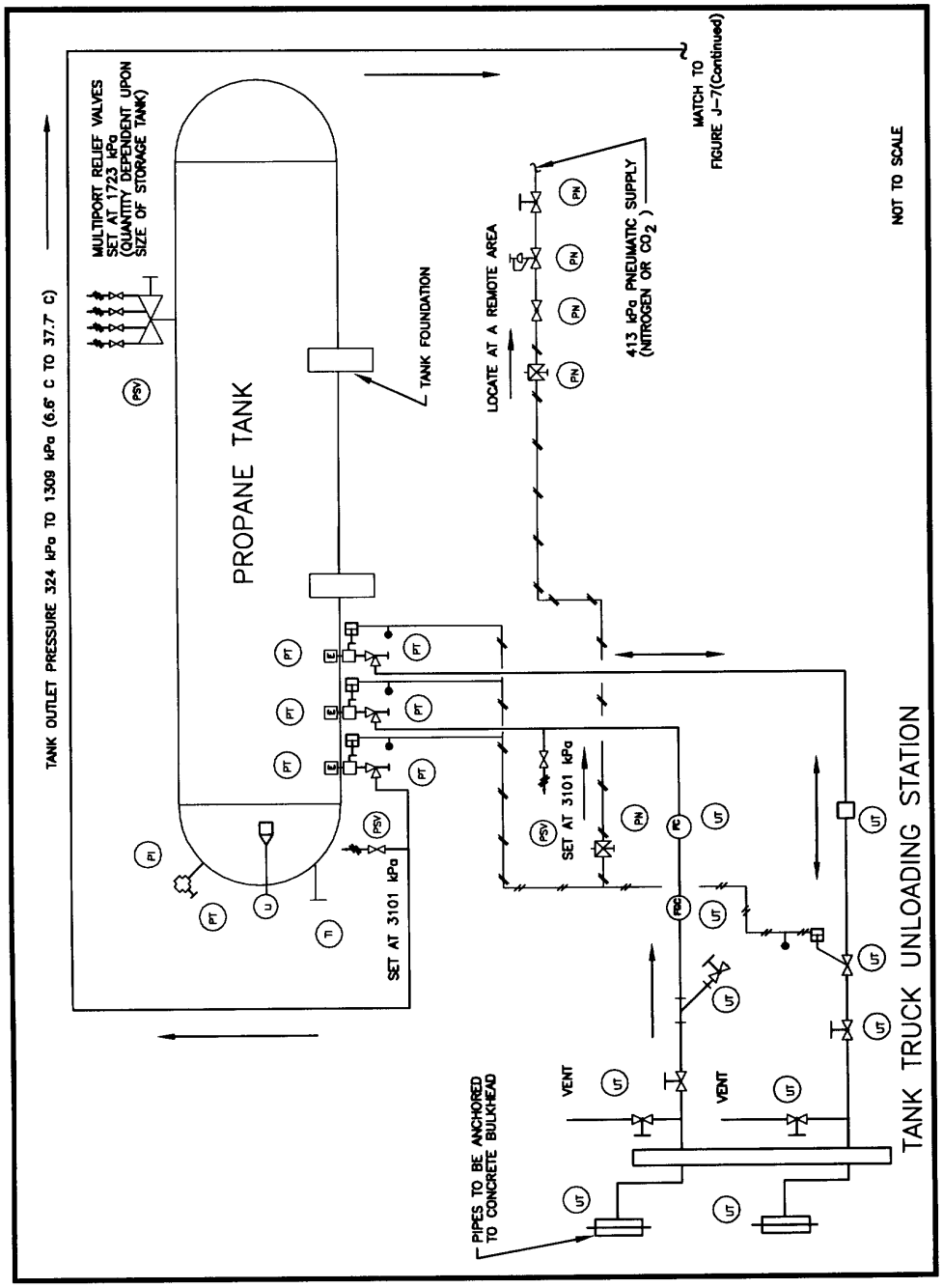

Figure J–7A
Steam Heated Vaporizer Without Liquid Pump

APPENDIX J (Continued)

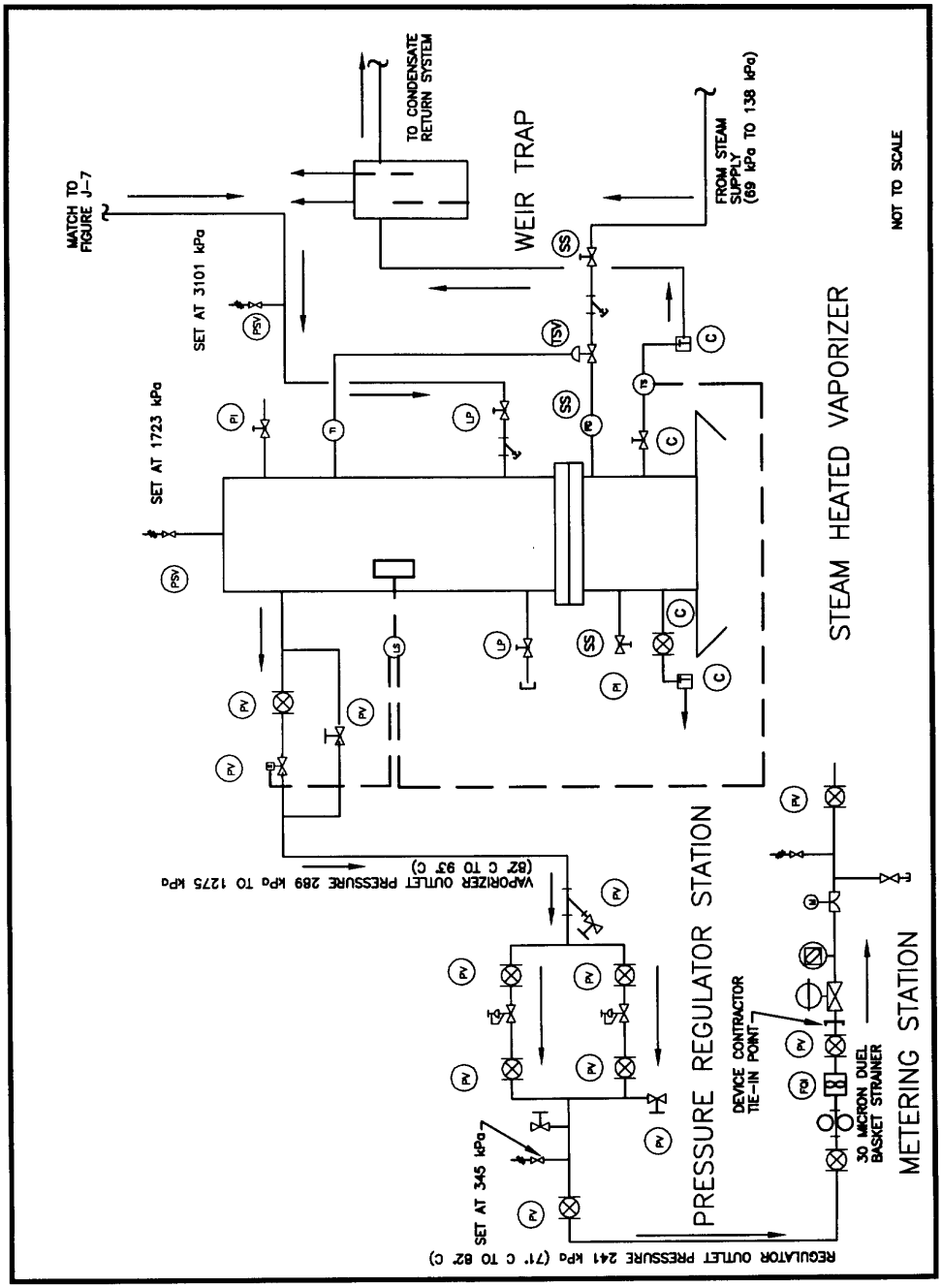

Figure J-7B
Steam Heated Vaporizer Without Liquid Pump

REFERENCES

NOTE: THE FOLLOWING REFERENCED DOCUMENTS FORM A PART OF THIS HANDBOOK TO THE EXTENT SPECIFIED HEREIN. USERS OF THIS HANDBOOK SHOULD REFER TO THE LATEST REVISIONS OF CITED DOCUMENTS UNLESS OTHERWISE DIRECTED.

FEDERAL/MILITARY SPECIFICATIONS, STANDARDS, BULLETINS, HANDBOOKS, AND NAVFAC GUIDE SPECIFICATIONS:

Unless otherwise indicated, copies are available from the Naval Publishing and Printing Service Office (NPPSO), Document Order Desk, Building 4D, 700 Robbins Avenue, Philadelphia, PA 19111-5094.

FEDERAL SPECIFICATIONS

BB-A-1034	Compressed Air, Breathing.
ZZ-H-451	Hose, Fire, Woven-Jacketed Rubber or Latex or Rubber-Coated Fabric-Lined With Couplings.

MILITARY SPECIFICATIONS

MIL-E-24091	Extinguisher, Fire, Portable, Potassium Bicarbonate, Dry Chemical, Cartridge-Operated Type.
MIL-E-24269	Extinguisher, Fire, Carbon Dioxide, 15 Pound, Portable, Permanent Shutoff, Navy Shipboard Use.
MIL-H-24580	Hose Assemblies, Synthetic Rubber, Noncollapsible, Firefighting.
MIL-H-24606	Hose Assemblies, Chlorosulfonated Polyethylene Impregnated, Double Synthetic Jacket, With Couplings, Firefighting and Other Water Service.
MIL-W-25038	Wire, Electrical, High Temperature and Fire Resistant.

MIL-F-29046	Flooring Raised, General Specification for.

NAVFAC GUIDE SPECIFICATIONS

NFGS-15484	Medical Gas and Vacuum Systems.

HANDBOOKS

MIL-HDBK-1012/1	Electronics Facilities Engineering.
MIL-HDBK-1190	Facility Planning and Design Guide.

NAVY MANUALS, P-PUBLICATIONS, AND INSTRUCTIONS:

OPNAVINST 5090.1	Environmental and Natural Resources Protection Manual, Chapter 6, Air Pollution Abatement.

NAVSHIPS Technical Manual Chapter 9930.

DM-22	Petroleum Fuel Facilities.
NAVMAT P-9290	System Certification Procedures and Criteria Manual for Deep Submergency System.

OTHER GOVERNMENT DOCUMENTS AND PUBLICATIONS:

DEPARTMENT OF LABOR

29 CFR 1910	OSHA Safety and Health Standards for General Industry (Labor OSHA Industry Reg. 2206).

(Unless otherwise indicated, copies are available from Occupational Safety and Health Administration, 200 Constitution Avenue NW, Washington DC 20210.)

DRAWINGS

BUREAU OF SHIPS (BUSHIPS)

803-1645097	Hatch W.T. Raised Quick Acting 36" x 42" - 5 P.S.I. Arrangement.
804-5184163	Trunk Safety Nets.
805-1400064	WTQA Doors - 18" x 36", 6 Dog Arrangement.
805-1624089	Hatch W.T. Raised Individually Dogged 36" x 60" With Scuttle-15 P.S.I. Arrangement.
810-1385834	Water Fog 1-1/2-inch Ball Type.

NAVAL SEA SYSTEMS COMMAND (NAVSEA)

608-4674414	Mounting Fire Hose Rack and Access.

NAVSHIPS

803-1385712	Valve, Hose Globe and Angle.
803-5184129	Steel Balanced Door.
804-1749235	Thermally Insulated Ladder Rungs for Escape Trunks From Machinery Spaces.
805-1400066	Doors W.T. (Individually Dogged) Medium Steel.
805-1400074	Galvanized Steel, Without HASP Assembly.
805-1749113	Inclined Ladders Aluminum Assemblies.
805-860089	Metal Hose Rack Assembly and Details.

810-4444647 Syringe Spanner Navy Fire Hose.

MARE ISLAND

612-1889964A1 Emergency Air Breathing Device.

612-1889964A2 Emergency Air Breathing Device Models.

(Unless otherwise indicated, copies are available from Naval Engineering Drawing Support Activity, Portsmouth, NH 03804-5000.)

NON-GOVERNMENT PUBLICATIONS:

AMERICAN CONFERENCE OF GOVERNMENTAL INDUSTRIAL HYGIENISTS (ACGIH)

Industrial Ventilation Guide.

ACGIH 2080 Industrial Ventilation, A Manual of Recommended Practice.

(Unless otherwise indicated, copies are available from the American Conference of Governmental Industrial Hygienists (ACGIH), 6500 Glenway Avenue, Bldg. D-7, Cincinnati, OH 45211-4438.)

AMERICAN NATIONAL STANDARDS INSTITUTE (ANSI)

ANSI B31.3 Chemical Plant and Petroleum Refinery Piping.

Unless otherwise indicated, copies are available from American National Standards Institute (ANSI), 1430 Broadway, New York, NY 10018.)

AMERICAN PETROLEUM INSTITUTE (API)

API 2510 Design and Construction of LP Gas Installations at Marine and Pipeline Terminals, Natural Gas Processing Plants, Refineries, Petrochemical Plants, and Tank Farms.

(Unless otherwise indicated, copies are available from the American Petroleum Institute (API), 1220 L Street NW, Washington, DC 20005.)

AMERICAN SOCIETY FOR TESTING AND MATERIALS (ASTM)

ASTM A36	Structural Steel.
ASTM A242/A242M	Standard Specification for High-Strength Low-Alloy Structural Steel.
ASTM 588/A588M	Standard Specification for High-Strength Low-Alloy Structural Steel With 50 psi (345 Mpa) Minimum Yield Point to 4 in. (100 mm) Thick.

(Unless otherwise indicated, copies are available from American Society for Testing and Materials (ASTM), 1916 Race Street, Philadelphia, PA 19103.)

AMERICAN SOCIETY OF MECHANICAL ENGINEERS (ASME)

Boiler and Pressure Vessel Code.

(Unless otherwise indicated, copies are available from American Society of Mechanical Engineers (ASME), 345 East 47th Street, New York, NY 10017.)

AMERICAN WATER WORKS ASSOCIATION (AWWA)

AWWA C506	Backflow Prevention Devices--Reduced Principle and Doublecheck Valve Types.

(Unless otherwise indicated, copies are available from American Water Works Association (AWWA), 6666 West Quincy Avenue, Denver, CO 80235.)

AMERICAN WELDING SOCIETY, INC. (AWS)

AWS B2.1.005	Standard Welding Procedure Specification (WPS) for Gas Metal Arc Welding of Austenitic Stainless Steel.

AWS B2.1.006	Standard Welding Procedure Specification (WPS) for Gas Metal Arc Welding of Carbon Steel to Austenitic Stainless Steel.

(Unless otherwise indicated, copies are available from American Welding Society, Inc. (AWS), 550 N.W. LeJeune Road, Miami, FL 33126.)

FACTORY MUTUAL RESEARCH CORPORATION (FM)

Loss Prevention Data.

(Unless otherwise indicated, copies are available from Factory Mutual Research Corporation (FM), 1151 Boston-Providence Turnpike, P.O. Box 9102, Norwood, MA 02062.)

NATIONAL FIRE PROTECTION ASSOCIATION (NFPA)

NFPA 12	Carbon Dioxide Extinguishing Systems.
NFPA 24	Installation of Private Fire Service Mains and Their Appurtenances.
NFPA 54	National Fuel Gas Code.
NFPA 58	Storage and Handling of Liquefied Petroleum Gases.
NFPA 70	National Electrical Code.
NFPA 78	Lightning Protection Code.

(Unless otherwise indicated copies are available from National Fire Protection Association (NFPA), Batterymarch Park, Quincy, MA 02269-9904.)

SHEET METAL AND AIR CONDITIONING CONTRACTORS' NATIONAL ASSOCIATION, INC. (SMACNA)

Industrial Duct Construction Standards.

(Unless otherwise indicated, copies are available from Sheet Metal and Air Conditioning Contractors' National Association, Inc., (SMACNA), P. O. Box 221230, Chantilly, VA 22033-1230.)

UNDERWRITERS LABORATORIES INC. (UL)

UL 595	Marine-Type Electric Lighting Fixtures.

(Unless otherwise indicated, copies are available from Underwriters Laboratories Inc. (UL), 333 Pfingsten Road, Northbrook, IL 60062.)

GLOSSARY

AFF. Above finished floor.

AFFF. Aqueous film-forming foam.

APC. Aqueous potassium carbonate.

BOD. Biological oxygen demand.

CBR. Chemical biological radiation.

CNO. Chief of Naval Operations.

COD. Chemical oxygen demand.

CSHS. Combined submarine hose station.

CV. Aircraft carrier deck.

DD. Destroyer deck.

DTC. Data terminal cabinet.

EAB. Emergency air breathing.

EFA. Engineering field activity.

EFD. Engineering field division.

EMI. Electromagnetic interference.

EPA. Environmental Protection Agency.

FR. Foam reel station.

FS. Foam hose station.

FTC. Fleet Training Center.

HCFF. High capacity fog foam generator.

HS. Hose station.

HVAC. Heating, ventilating, and air conditioning.

LANTNAVFACENGCOM. Atlantic Division, Naval Facilities Engineering Command.

MBAS. Methylene-blue-active substance.

MILCON. Military construction.

NAVFACENGCOM. Naval Facilities Engineering Command.

NAVMAT. Naval Material Command.

NAWCTSD. Naval Air Warfare Center Training Systems Division.

NIOSH. National Institute for Occupational Safety and Health.

OBA. Oxygen breathing apparatus.

PFE. PKP fire extinguisher.

PKP. Purple potassium powder.

POTW. Public owned treatment works.

SHS. Submarine hose station.

SP. Stand pipe.

TAR. Twin agent reels.

TDS. Total dissolved solids.

TLV. Threshold limit value.

TPP. Triphenyl phosphate.

TSS. Total suspended solids.

TTO. Total toxic organics.

WTQA. Watertight quick-acting.

CUSTODIAN
NAVY - YD2

PREPARING ACTIVITY
NAVY - YD2

PROJECT NO.
FACR-1180

STANDARDIZATION DOCUMENT IMPROVEMENT PROPOSAL

INSTRUCTIONS

1. The preparing activity must complete blocks 1, 2, 3, and 8. In block 1, both the document number and revision letter should be given.

2. The submitter of this form must complete blocks 4, 5, 6, and 7.

3. The preparing activity must provide a reply within 30 days from receipt of the form.

NOTE: This form may not be used to request copies of documents, nor to request waivers, or clarification of requirements on current contracts. Comments submitted on this form do not constitute or imply authorization to waive any portion of the referenced document(s) or to amend contractual requirements.

I RECOMMEND A CHANGE:	1. DOCUMENT NUMBER MIL-HDBK-1027/1B	2. DOCUMENT DATE *(YYMMDD)* *980131*

3. DOCUMENT TITLE FIREFIGHTING SCHOOL FACILITIES

4. NATURE OF CHANGE *(identify paragraph number and include proposed rewrite, if possible. Attach extra sheets as needed.)*

5. REASON FOR RECOMMENDATION

6. SUBMITTER

a. NAME *(Last, First, Middle Initial)*	b. ORGANIZATION	
c. ADDRESS *(Include Zip Code)*	d. TELEPHONE *(Include Area Code)* (1) Commercial (2) DSN *(If applicable)*	7. DATE SUBMITTED: *(YYMMDD)*

8. PREPARING ACTIVITY

a. NAME	b. TELEPHONE *(Include Area Code)*	
COMMANDER LANTNAVFACENGCOM CODE 403	(1) Commercial (757) 322-4243	(2) DSN 262-4243
c. ADDRESS *(Include Zip Code)* *1510 GILBERT STREET* *NORFOLK, VA 23511-2699*	**IF YOU DO NOT RECEIVE A REPLY WITHIN 45 DAYS, CONTACT:** Defense Quality and Standardization Office 5203 Leesburg Pike, Suite 1403, Falls Church, VA 22041-3466 Telephone (703) 756-2340 DSN 289-2340	