CCB Application Notes:

1. Character(s) preceded & followed by these symbols (└ ┘) or (┌ ┐) are super- or subscripted, respectively.
   EXAMPLES: 42m└3┘ = 42 cubic meters
   CO┌2┐ = carbon dioxide

2. All degree symbols have been replaced with the word deg.

3. All plus or minus symbols have been replaced with the symbol +/-.

4. All table note letters and numbers have been enclosed in square brackets in both the table and below the table.

5. Whenever possible, mathematical symbols have been replaced with their proper name and enclosed in square brackets.

NAVFAC DM-39
JULY 1982

APPROVED FOR PUBLIC RELEASE

HYPERBARIC FACILITIES

DESIGN MANUAL 39

DEPARTMENT OF THE NAVY
NAVAL FACILITIES ENGINEERING COMMAND
200 STOVALL STREET

ALEXANDRIA, VA. 22332

<Page pageid="ii">

EDITED BY:

DR. MICHAEL YACHNIS, CHIEF ENGINEER, NAVFAC

MR. ANTHONY P. IANUZZI, CERTIFICATION ENGINEER, NAVFAC

CONTRIBUTORS

Dr. Michael Yachnis, Naval Facilities Engineering Command

Mr. A. Pete Ianuzzi, Naval Facilities Engineering Command

Mr. Terry Hayes, Naval Facilities Engineering Command

Mr. Thomas J. Dawson, Naval Facilities Engineering Command

Mr, Michael P. Jones, Naval Facilities Engineering Command

Mr. Richard A. Rice, Naval Facilities Engineering Command

Mr. Frank T. Gorman, Chesapeake Division,
Naval Facilities Engineering Command

Mr. Alan J. Dietrich, Naval Sea Systems Command

Mr. James W. Mccarthy, Navy Experimental Diving Unit

Mr. L. "Chips" Hurley, Naval Medical Research Unit

M/C W.E. Gholson, Naval Amphibious School

M/C J.D. Connen, Naval Safety Center

LtJg W.C. Fitzgerald, Naval Safety Center

Mr. Frank Gallegos, Mare Island Naval Shipyard

LCdr George Seltzer, Naval Material Command

ABSTRACT

General guidance relating to the design of hyperbaric facilities is presented for use by experienced engineers and architects and members of the Navy Diving Community who require information in this very specialized area. Design guidance is provided on pressure chambers and vessels, appurtenances, foundations piping systems, life support systems, wet pots, fire protection systems, electrical systems, communication systems, control systems, system cleaning, lubricants, sealants, and materials.

FOREWORD

This design manual is one of a series developed from an evaluation of facilities in the shore establishment, from surveys of the availability of new materials and construction methods, and from selection of the best design practices of the Naval Facilities Engineering Command, other Government agencies, and the private sector. This manual uses, to the maximum extent feasible, national professional society, association, and institute standards in accordance with NAVFACENGCOM policy. Deviations from these criteria should not be made without prior approval of NAVFACENGCOM Headquarters (Code 04).

Design cannot remain static any more than can the naval functions it serves or the technologies it uses. Accordingly, recommendations for improvement are encouraged from within the Navy and from the private sector and should be furnished to NAVFACENGCOM Headquarters (Code 04). As the design manuals are revised they are being restructured. A chapter or a combination of chapters will be issued as a separate design manual for ready reference to specific criteria.

This publication is certified as an official publication of the Naval Facilities Engineering Command and has been reviewed and approved in accordance with the SECNAVINST 5600.16.

W. M. Zobel
Rear Admiral, CEC, U.S. Navy
Commander
Naval Facilities Engineering Command

CONTENTS

Page

CHAPTER 1. HYPERBARIC FACILITIES 39-1

1. SCOPE 39-1

2. CANCELLATION 39-1

3. BASIS OF MANUAL 39-1

4. CRITERIA 39-1

5. FUNCTION 39-1

6. MISSION 39-1

7. HAZARDS 39-2

8. PERSONNEL SAFETY 39-2

9. CERTIFICATION 39-2

CHAPTER 2. HYPERBARIC PRESSURE VESSELS 39-3

Section 1. TYPES OF HYPERBARIC PRESSURE VESSELS AND DESIGN PROCEDURES 39-3

1. SCOPE 39-3

2. HYPERBARIC PRESSURE VESSELS 39-3

3. TYPES OF HYPERBARIC PRESSURE VESSELS 39-3
a. Dry 39-3
b. Wet 39-3
c. Combination 39-3

4. CLASSES OF HYPERBARIC PRESSURE VESSELS 39-3
a. Class I Man-Rated 39-3
b. Class II Non-Man-Rated 39-3

5. DESIGN CONSIDERATIONS 39-3

6. MANUFACTURER'S DESIGN REPORT 39-5
a. Manufacturer's Design Report 39-5
b. Design Report Format 39-5

7. USER'S DESIGN SPECIFICATION 39-5

Section 2. MATERIALS FOR HYPERBARIC VESSELS 39-7

1. MATERIALS 39-7

CONTENTS

Page

2. MATERIAL CLASSES 39-7
   a. CLASS 1, Material of proven characteristics .39-7
   b. CLASS 2, Material of known properties 39-10
   c. CLASS 3, Materials whose properties are to be proven 39-11

3. MATERIALS PERMITTED 39-12

4. MATERIALS SPECIFICALLY NOT PERMITTED 39-12

5. MATERIAL TOUGHNESS 39-13
   a. Notch Sensitivity 39-13

6. CORROSION CONSIDERATIONS 39-20

Section 3. DESIGN 39-22

1. DESIGN 39-22

2. METHODS OF DETERMINING STRESSES 39-22

   a. Stress Analysis Methods 39-22
   b. Stress Intensity Limits 39-24
   c. Types of Stresses 39-24

   d. Stress Classification 39-25
   e. Determining Stress Intensities 39-25

3. DESIGN REQUIREMENTS 39-33
   a. Article D-1, "General" 39-33
   b. Article D-2, "Shells of Revolution Under Internal Pressure" 39-35

   c. Article D-3, "Shells of Revolution Under External Pressure" 39-35
   d. Article D-4, "Welded Joints" 39-35
   e. Article D-5, "Openings and Their Reinforcement" 39-36
   f. Article D-6, "Nozzles and Other Connections" .39-36
   g. Article D-7, "Flat Heads, Bolted and Studded Connections" 39-36
   h. Article D-8, "Quick-Actuating Closures" . . .39-36
   i. Article D-9, "Attachments and Supports" . . .39-37
   j. Article D-10, "Access and Inspection Openings" 39-37

4. "RULES FOR BOLTED FLANGE CONNECTIONS" 39-37

5. "EXPERIMENTAL STRESS ANALYSIS" 39-37

6. EXAMPLE OF DESIGN BY ANALYSIS AS APPLIED TO A SPHERICAL CHAMBER 39-39
a. Specification Data 39-39
b. Materials and Initial Calculations 39-41

CONTENTS

Page

c. Stress Analysis 39-54
d. Design Finalization 39-75
e. Stress Documentation 39-76

7. EXAMPLE OF DESIGN BY ANALYSIS AS APPLIED TO A CYLINDRICAL CHAMBER 39-76
a. Specification Data 39-76
b. Materials and Initial Calculations 39-76
c. Stress Analysis 39-82

References 39-94

CHAPTER 3. APPURTENANCES 39-96

1. SCOPE 39-96

Section 1. VIEWPORTS 39-96

1. VIEWPORTS 39-96

2. BASIC VIEWPORT TYPES 39-96
a. Flat Plate 39-96
b. Conical Frustum 39-96

3. MATERIAL SELECTION 39-100

4. SEALING METHODS 39-100
a. Seal Types 39-100
b. Sealing Techniques 39-100

5. FIELD OF VIEW CONSIDERATIONS 39-102
a. Refractive Index 39-102
b. Effective Limiting Aperture 39-102
c. Monocular and Binocular Fields 39-102

6. DESIGN OF ACRYLIC WINDOWS 39-102
a. Physical Properties 39-106
b. Fabrication Certification 39-106
c. Design Certification 39-106
d. Pressure Testing Certification 39-106
e. Identification 39-106

7. WINDOW DESIGN 39-109

8. WINDOW SEATS 39-120

9. VIEWPORT FLANGES 39-120

10. WINDOW SEALS 39-123

CONTENTS

Page

11. DIMENSIONAL TOLERANCES AND SURFACE FINISH 39-123

12. FABRICATION OF WINDOWS 39-124

13. INSTALLATION OF WINDOWS 39-124

14. PRESSURE TESTING OF WINDOWS 39-126

Section 2. DOORS AND CLOSURES 39-127

1. DOORS AND CLOSURES 39-127

2. SIZE REQUIREMENTS 39-127
a. Anthropometric Data 39-127
b. Additional Clearance for Bulky Clothing . . .39-133
c. Clearance for Door 39-133

3. CLOSING MECHANISMS 39-133
a. Quick Acting 39-133
b. Swing Bolt 39-133
c. Alternate Closing and Locking Devices 39-133

4. DOOR AND CLOSURE HINGES 39-139

5. SEALS FOR CLOSURES AND DOORS 39-139
a. Closure Seals 39-139
b. Door Seals for Compression Chambers 39-142

6. DOOR AND CLOSURE LOCATION 39-148

7. LOCK SPACES 39-148

8. SAFETY INTERLOCKS 39-148

Section 3. INTERIOR APPURTENANCES 39-150

1. INTERIOR APPURTENANCES 39-150

2. DECK PLATES 39-150

3. BUNKS, TABLES, SEATS, SHOWER RINGS, AND OTHER INSTALLED ITEMS 39-150

4. FABRICS 39-150

5. BIB MASKS 39-150

6. TOILET, SINK, AND SHOWER 39-150

CONTENTS

Page

7. ORDINARY COMPONENTS 39-150

8. PAINTS 39-150

References 39-151

CHAPTER 4. FOUNDATIONS 39-152

1. SCOPE 39-152

2. RELATED CRITERIA 39-152

Section 1. SITE SELECTION 39-153

1. REGIONAL STUDY 39-153
a. Geological Factors 39-153
b. Seismic Activity 39-153

2. LOCAL STUDY 39-153
a. Previous Investigations 39-153
b. Seismic Considerations 39-153

Section 2. SUBSURFACE EVALUATION 39-154

1. SUBSURFACE EVALUATION 39-154

2. PRELIMINARY DESIGN INFORMATION 39-154
a. Topographical Features 39-154
b. Loading 39-154
c. Existing Construction 39-154
d. Future Conditions 39-154

3. SOIL BORING REQUIREMENTS 39-154
a. Criteria 39-154
b. Number and Spacing of Borings 39-154
c. Depth of Borings 39-155
d. Procedures 39-155

4. LABORATORY TESTS 39-155

Section 3. FOUNDATION ANALYSIS AND DESIGN 39-156

1. SETTLEMENT 39-156
a. Initial Settlement 39-156
b. Primary Settlement 39-156
c. Secondary Settlement 39-156
d. Cyclic Loadings Settlement 39-156
e. Vibration Settlement 39-156
f. Water-affected Settlement 39-156

CONTENTS

Page

2. SETTLEMENT ANALYSIS 39-156

3. FOUNDATION TYPES 39-157
a. Individual Spread Footings 39-157
b. Mat or Raft Foundation 39-157
c. Pile Foundation 39-157
d. Caisson Foundations 39-157

4. FOUNDATION TYPE SELECTION 39-158

Section 4. STRUCTURAL SUPPORTS 39-159

1. STEEL AND CONCRETE STRUCTURAL SUPPORTS 39-159

2. DESIGN PARAMETERS COMMON TO BOTH CONSTRUCTION MATERIALS 39-159
a. Vertical Deflection 39-159
b. Lateral Displacement 39-159
c. Induced Vibration 39-159
d. Fatigue Strength 39-160

3. DESIGN PARAMETERS PECULIAR TO EACH MATERIAL 39-160
a. Structural Steel 39-160
b. Reinforced Concrete 39-160

Section 5. INSTALLATION IN EXISTING BUILDINGS 39-162

1. SOIL-STRUCTURE INTERACTION 39-162
a. Initial Settlement 39-162
b. Primary Settlement 39-162

2. FOUNDATION TYPES 39-162

3. STRUCTURAL SUPPORTS 39-163

References 39-164

CHAPTER 5. PIPING 39-165

Section 1. PIPING SYSTEMS 39-165

1. SCOPE 39-165

2. PIPING SYSTEM CLASSIFICATION 39-165
a. Category I System 39-165
b. Category II System 39-165
c. Category III System 39-165
d. Category IV System 39-165

CONTENTS

Page

Section 2. DESIGN CONSIDERATIONS 39-167

1. SEQUENCE 39-167

2. PROCEDURES 39-167

Section 3. PIPING SYSTEM MATERIALS 39-169

1. MATERIALS 39-169

2. CLASSIFICATION 39-169

3. APPLICATIONS 39-169
a. Justification of Class 2 Materials 39-170
b. Justification of Class 3 Materials 39-171

4. MATERIALS SPECIFICALLY NOT PERMITTED 39-171

5. MATERIAL COMPATIBILITY 39-172
a. Welded and Brazed Joints 39-172
b. Galvanic Corrosion 39-172

6. FLUID COMPATIBILITY 39-172
a. Compatibility with Oxygen 39-173
b. Compatibility with Seawater 39-174
c. Compatibility with Other Materials 39-174

7. ENVIRONMENTAL COMPATIBILITY 39-175

8. ENGINEERING PROPERTIES 39-175
a. Thermal Conductivity and Expansion 39-175
b. Strength 39-175
c. Nil-Ductility Transition Temperature 39-175

9. ECONOMIC FACTORS 39-176

Section 4. CONSTRUCTION CONSIDERATIONS 39-176

1. MECHANICAL STRENGTH 39-176

2. PIPE SUPPORTS 39-176

3. BENDING 39-176

4. PIPE JOINTS 39-178
a. Welded Joints 39-178
b. Brazed Pipe and Tube Joints 39-178
c. Flanged Joints/Bolted Flanges 39-179
d. Threaded Joints 39-179

CONTENTS

Page

Section 5. DESIGN GUIDANCE 39-180

1. DESIGN GUIDANCE 39-180

2. PRELIMINARY FLUID-FLOW ANALYSIS 39-180
a. Flow Capacity Estimates 39-180

3. DESIGN FOR PRESSURE 39-196
a. Minimum Wall Thickness, Straight Pipe Under Pressure 39-197
b. Minimum Wall Thickness, Straight Pipe Under External Pressure 39-198
c. Allowances 39-198

4. SYSTEM DETAILING AND FINAL FLOW ANALYSIS 39-198
a. Final Routing of Pipe and Selection of Supports and Anchors 39-199
b. Final Fitting and Valve Selection 39-199
c. Operations and Maintenance 39-200
d. Draining and Cleaning 39-200
e. Thermal Insulation 39-201
f. Possible Reclassification 39-201
g. Detailed Fluid Flow Calculations 39-201

5. STRUCTURAL ANALYSIS 39-201
a. Category I and II Piping Systems 39-201
b. Category III and IV Piping Systems 39-204

6. NOISE CONSIDERATIONS 39-205
a. Noise Sources 39-205
b. Acceptable Noise Levels 39-206
c. Noise Control 39-207

7. COLOR CODING FOR PIPING SYSTEMS 39-207a

References 39-208

CHAPTER 6. LIFE SUPPORT SYSTEMS 39-210

1. SCOPE 39-210

Section 1. ATMOSPHERE REQUIREMENTS 39-210

1. ATMOSPHERE 39-210

2. BREATHING GAS COMPOSITION REQUIREMENTS 39-210
a. Oxygen Concentration 39-210
b. Anoxia and Oxygen Toxicity 39-210
c. Oxygen versus Depth Ranges 39-212

d. Diluent Gasses 39-212
e. Contaminants 39-213

CONTENTS

Page

3. BREATHING GAS CONSUMPTION REQUIREMENTS 39-217

4. TEMPERATURE-HUMIDITY REQUIREMENTS 39-220
   a. Temperature 39-220
   b. Humidity 39-220

5. PRESSURIZATION/DEPRESSURIZATION 39-221
   a. Pressurization 39-221
   b. Depressurization 39-221

Section 2. AIR SYSTEMS 39-221

1. COMPRESSED AIR SYSTEMS 39-221

2. INTAKE AIR FILTER 39-221

3. COMPRESSOR 39-221
   a. Capacity 39-222
   b. Pressure 39-222
   c. Purity 39-222
   d. Reliability 39-222

4. OIL FILTER AND SEPARATOR 39-222

5. STORAGE FLASKS 39-222

6. PREVENTION OF LINE FREEZE 39-223

7. ADDITIONAL INFORMATION ON COMPRESSORS AND COMPRESSED AIR DISTRIBUTION SYSTEMS 39-223

Section 3. GAS SYSTEMS 39-225

1. MIXED GAS BREATHING SYSTEMS 39-225

2. TRUCK TRANSFER 39-225

3. GAS STORAGE 39-225

4. GAS MIXING 39-226

5. CARBON DIOXIDE CONTROL 39-227
   a. CO_2 Absorbent 39-228
   b. Quantity of CO_2 39-228
   c. Effect of Temperature 39-228
   d. Absorbent Bed Configuration 39-228

CONTENTS

Page

6. TEMPERATURE-HUMIDITY CONTROL 39-230

7. GAS DISTRIBUTION 39-237
a. Flexibility 39-237
b. Line Size 39-237
c. Valves 39-237
d. Dead Ends 39-237
e. Exhaust Lines 39-237

8. COMPRESSORS/TRANSFER PUMPS 39-238

9. GAS MONITORING 39-238

Section 4. AUXILIARY BREATHING SYSTEMS 39-239

1. BUILT-IN-BREATHING APPARATUS 39-239

Section 5. ATMOSPHERE MONITORING 39-240

1. ENVIRONMENT BREATHING GAS ANALYSIS 39-240

Section 6. FOOD SUPPLY 39-242

1. FOOD SUPPLY 39-242

Section 7. POTABLE WATER AND SANITARY SYSTEM 39-242

1. POTABLE WATER AND SANITARY SYSTEM 39-242
a. Hull Valves 39-242
b. Tank Sizes 39-242
c. Vents 39-242
d. Liquid Level Indicators 39-245
e. Pressure Interlock 39-245
f. Mixing Valve 39-245
g. Waste Line Size 39-245
h. Corrosion Resistance 39-245

References 39-246

CHAPTER 7. WET CHAMBER WATER SYSTEMS 39-247

1. SCOPE 39-247

Section 1. WATER SUPPLY 39-247

1. WATER SUPPLY 39-247
a. Volume 39-247
b. Flow Requirements 39-247
c. Quality Requirements 39-249

CONTENTS

Page

2. LINES 39-249

3. CIRCULATION 39-249

4. DRAIN 39-249
a. Sanitary Drain 39-249
b. Storm Drain 39-250

Section 2. WATER TREATMENT 39-250

1. WATER TREATMENT 39-250

2. TURBIDITY 39-250

3. CHEMICAL CONTENT 39-250

Section 3. WATER TEMPERATURE CONTROL 39-251

1. WATER TEMPERATURE CONTROL 39-251

2. INSULATION 39-251

3. LUBRICATION 39-251

References 39-253

CHAPTER 8. FIRE PROTECTION AND EXTINGUISHING SYSTEMS 39-254

1. GENERAL 39-254
a. Scope 39-254
b. Codes and Standards 39-254
c. Requirements 39-254

2. FIRE PROTECTION 39-254
a. Water Spray 39-254
b. Spray Density 39-254
c. Spray Duration 39-254
d. Manual Activation 39-255
e. Booster Pumps 39-255
f. Use Indicators 39-255
g. Manual System 39-255
h. Electrical Circuits Shutdown 39-255
i. Gas Pressurization 39-255
j. Automatic Operation 39-255

3. FIRE EXTINGUISHERS 39-257
a. Minimum Requirements 39-257
b. Portable Extinguishers 39-257
c. Prohibited Types 39-257

CONTENTS

Page

d. CO_2 Extinguishers 39-257
e. Acceptable Compounds 39-257

4. HAZARDS 39-257
a. Basic Hazards 39-257
b. Fire and Explosion 39-257
c. Oxygen 39-257
d. Atmosphere 39-258
e. Fire Zone 39-258
f. Protective Clothing 39-261
g. Sources of Ignition 39-261

5. STRUCTURAL 39-261
a. Chamber 39-261
b. Building Construction 39-262

6. EMERGENCY BREATHING APPARATUS 39-262

References 39-263

CHAPTER 9. ELECTRICAL SYSTEMS 39-264

Section 1. PRELIMINARY DATA 39-264

1. SCOPE 39-264

2. RELATED CRITERIA 39-264

3. POLICIES 39-264
a. DOD Policies 39-264
b. Local Codes 39-264
c. National Codes 39-264
d. Design Analysis 39-264
e. Specifications 39-265
f. Requirements for Physically Handicapped . . .39-265
g. Architectural Considerations 39-265
h. OSHA Requirements 39-265
i. Women in the Navy 39-265

Section 2. POWER SUPPLY 39-265

1. ELECTRIC POWER SUPPLY 39-265
a. Primary 39-265
b. Standby 39-265
c. Emergency 39-265

CONTENTS

Page

2. ACCEPTABLE POWER SUPPLY 39-266
a. Primary 39-266
b. Standby 39-266

Section 3. WIRING 39-267

1. WIRING OUTSIDE CHAMBERS 39-267

2. WIRING INSIDE CHAMBERS 39-267
a. Intrinsically Safe Circuits 39-267
b. Explosion-Proof Circuits 39-268
c. Termination 39-268
d. Raceway 39-268
e. Separation of Power 39-268
f. Cable Insulation 39-268
g. Conductors 39-270
h. Wiring Devices 39-270
i. Overcurrent Protection 39-270

3. GROUNDING 39-270
a. Chamber 39-270
b. Electrical Service 39-270
c. Electrical Equipment 39-270

Section 4. LIGHTING 39-270

1. LIGHTING OUTSIDE CHAMBERS 39-270

2. LIGHTING INSIDE CHAMBERS 39-270
a. Light Pipes 39-271
b. Adapters 39-271
c. External Originating Light 39-274

3. PERSONNEL LIGHTING REQUIREMENTS 39-275
a. Illumination 39-275
b. Illumination Requirements 39-275
c. Illumination Realization 39-275

References 39-276

CHAPTER 10. COMMUNICATION SYSTEMS 39-277

1. SCOPE 39-277

Section 1. AUDIO COMMUNICATIONS 39-277

1. AUDIO COMMUNICATIONS 39-277

CONTENTS

Page

2. CHAMBER ACOUSTICS 39-277
a. Reverberation 39-277
b. Resonances 39-277
c. Helium Speech Distortion 39-278

3. INTERCOM POWER REQUIREMENTS 39-278

4. PROTECTION OF AUDIO EQUIPMENT FROM PRESSURE EFFECTS 39-278
a. Receiving and Transmitting Devices 39-278

5. EXAMPLE INSTALLATION 39-280

Section 2. VIDEO COMMUNICATIONS 39-280

1. VIDEO COMMUNICATIONS 39-280

2. VIDEO COMMUNICATION AS A SUPPLEMENT TO DIRECT OBSERVATION 39-280

3. CAMERA STYLES AND SELECTION 39-282

4. CAMERA LOCATIONS 39-282

5. LENS SELECTION AND FIELD OF VIEW 39-282

6. LIGHTING REQUIREMENTS 39-283

7. VIDEO RECORDERS 39-283

CHAPTER 11. CHAMBER OPERATING CONTROL SYSTEMS 39-284

1. SCOPE 39-284

Section 1. OPERATING CONTROL SYSTEM TYPES 39-284

1. CHAMBER CONTROL SYSTEM TYPES 39-284

2. MANUAL CONTROL SYSTEM 39-284

3. AUTOMATIC COMPUTER-OPERATED CONTROL SYSTEM 39-284

4. COMBINATION AUTOMATIC-MANUAL CONTROL SYSTEM 39-284

Section 2. CONTROL PANEL DESIGN 39-287

1. CONTROL PANEL DESIGN 39-287

CONTENTS

Page

2. CONSOLES 39-287

References 39-288

CHAPTER 12. LUBRICANTS, SEALANTS, AND CLEANING PROCEDURES FOR HYPERBARIC SYSTEMS 39-289

1. SCOPE 39-289

Section 1. LUBRICANTS AND SEALANTS 39-289

1. LUBRICANTS AND SEALANTS 39-289

Section 2. CLEANING PROCEDURES 39-294

1. CLEANING PROCEDURES 39-294

2. BREATHING GAS 39-294

3. PIPING AND GAS STORAGE SYSTEMS 39-297

4. OXYGEN HIGH PRESSURE AND HIGH CONCENTRATION SYSTEMS 39-297

5. CLEANING STANDARDS AND SPECIFICATIONS 39-297

6. ACCEPTABLE CLEANING AGENTS 39-298
a. Trisodium Phosphate 39-298
b. Trichlorotrifluoroethane 39-298

7. UNACCEPTABLE CLEANING AGENTS 39-298

8. CLEANING DOCUMENTATION 39-298

References 39-299

Figures

Figure	Title	Page
2-1	Typical Charpy Test Data on High Strength Steels	39-14
2-2	Typical NDT Specimen Performance at Different Temperatures When Tested to ASTM A-208	39-15
2-3	Typical Charpy V Impact Test Data	39-16
2-4	Crack Arrest Curve Overlayed to Demonstrate the Residual Stress Pattern Associated with Weldment	39-17
2-5	Toughness Relative to Direction of Rolling and Effect of Rolling Ratio of High Strength Steels	39-18
2-6	Toughness Relative to Direction of Rolling of Aluminum Alloy Plates	39-19
2-7	Stress Categories and Limits of Stress Intensity	39-29
2-8	Fatigue Design Curve for Low Carbon and Alloy Steels	39-31
2-9	Schematic of Proposed Class 1 Vessel.	39-40
2-10	Details of Reinforcement for 4.0-Inch Nozzle	39-46
2-11	Details of Window Reinforcement	39-49
2-12	Details of Reinforcement for 40.0-Inch Diameter Penetration	39-51
2-13	Details of Entranceway and Door	39-53
2-14	Model No. 1 for Input to Computer Program	39-56
2-15	Model No. 2 for Input to Computer Program	39-57
2-16	Model No. 3 for Input to Computer Program	39-58
2-17	Details of 4.0-Inch Nozzle From model No.	39-60
2-18	Some Maximum Stresses in Model No. 1	39-61
2-19	Details of Geometric Model of the 40.0-Inch Entranceway Reinforcement	39-63
2-20	Some Maximum Stresses of Model No. 2	39-64
2-21	Some Maximum Stresses in Model No. 3	39-65
2-22	Configuration of 5.0-Inch-Diameter Inlet and Outlet Nozzles	39-79
2-23	Details of Shell, Viewport Penetration in Head and Entranceway	39-80
2-24	Front View of Cylindrical Chamber	39-83
2-25	Side View of Cylindrical Chamber	39-83
2-26	Longitudinal Section of Cylindrical Chamber	39-84
2-27	Details of Viewport Penetration Reinforcement in Cylinder	39-85
2-28	Model of Hatch End of Vessel for Input to Computer	39-86
2-29	Circumferential Stress in Vessel at Hatch End	39-87
2-30	Meridional Stresses in Vessel at Hatch End	39-88
2-31	Computer Model and Stress Output for Hatch Cover	39-89
2-32	Three Component Model of Viewport Penetration in Cylinder for Input to Computer	39-91
2-33	Hoop Stresses in Vicinity of Viewport Penetration in Cylinder	39-92
3-1	Flat Plate Viewport	39-97
3-2	Single Conical Frustum Viewport	39-97
3-3	Double Conical Frustum Window	39-98
3-4	Spherical Segment Window	39-98
3-5	Flat Window Pressure Sealing with Exterior Bolting	39-99

Figures

Figure	Title	Page
3-6	NSRDL Hyperbaric Chamber Port	39-99
3-7	Commercially Available Glass Windows	39-101
3-8	Refractive Effect of Flat Window	39-103
3-9	Limiting Aperture Locations on Various Viewport Configurations	39-104
3-10	Graphical Determination of Monocular and Binocular Viewing Fields in the Horizontal Plane	39-105
3-11	Standard Window Geometries	39-110
3-12	Short Term Critical Pressure of Flat Disc Acrylic Windows to 7,250 psi	39-112
3-13	Short Term Critical Pressure of Flat Disc Acrylic Windows to 43,500 psi	39-113
3-14	Short Term Critical Pressure of Conical Frustum Acrylic Windows to 7,250 psi	39-114
3-15	Short Term Critical Pressure of Conical Frustum Acrylic Windows to 43,500 psi	39-115
3-16	Seat Cavity Requirements (Conical Frustum, Spherical Shell, and Flat Disc)	39-121
3-17	Seat Cavity Requirements (Double Beveled Disc)	39-122
3-18	Typical Recompression Chamber Door	39-128
3-19	Typical Service Lock	39-129
3-20	Typical Recompression Chamber Entrance (Vertical Door)	39-132
3-21	Breech Lock	39-134
3-22	Spring Clamps	39-135
3-23	Segmented Ring Closure	39-136
3-24	Swing Bolt Closure	39-137
3-25	Clamping Bar Closure	39-138
3-26	Compound Hinges	39-140
3-27	Conventional Gasketed Closure	39-141
3-28	Gasketed Closure with Recess	39-141
3-29	Threaded Cap Closure	39-143
3-30	Threaded Plug Closure	39-144
3-31	Flat Face O-Ring Seal Suitable for High Pressure	39-145
3-32	Floating Ring Seal for High Pressures	39-146
3-33	O-Ring Sealed Penetrator Plug	39-147
3-34	Chamber Door With O-Ring in Dovetail Groove	39-149
5-1	Friction Factors for Clean Commercial Steel and Wrought Iron Pipe	39-182
5-2	Resistance of Valves and Fittings	39-184
5-3	Example Fluid System	39-193
6-1	Percentage of Oxygen in Breathing Mixture as a Function of Depth and Oxygen Partial Pressure (1)	39-211
6-2	Limiting Percent of CO_2 in Breathing-Gas Mixture as a Function of Depth and CO_2 Partial Pressure (1)	39-214
6-3	Relation of Physiological Effects to Carbon Dioxide Concentration and Exposure Period (4)	39-215
6-4	Limiting Percent CO in Breathing Mixture as a Function of Depth and CO Partial Pressure (7)	39-216
6-5	Total Hydrocarbons Allowed Vs. Dive Depth (7)	39-218

Figures

Figure	Title	Page
6-6	Allowable Nitrogen Dioxide Vs. Dive Depth (7)	39-218
6-7	Allowable Sulfur Dioxide Vs. Dive Depth (7)	39-219
6-8	Relation of Respiratory Volume and Oxygen Consumption to Type and Level of Exertion (9)	39-220
6-9	Compressed Air System	79-222
6-10	Vertical Storage Flask Drain	39-223
6-11	Horizontal Storage Flask	39-224
6-12	Horizontal Flask Drain	39-224
6-13	Typical Gas System	39-225
6-14	Gas Transfer to Storage	39-226
6-15	Schematic Arrangement of Airco Mixmaker at Mixing System (1)	39-227
6-16	Carbon Dioxide Control	39-228
6-17	Characteristics of Three Carbon Dioxide Absorbents (1)	39-229
6-18	Relation of Pressure Drop to Superficial Velocity, Pressure, and Bed Depth for Air Passing Through a Bed of 4 to 8 Mesh Baralyme Pellets (1)	39-231
6-19	Typical Canister Configuration (1)	39-232
6-20	Temperature-Humidity Control	39-233
6-21	Psychrometric Chart 1 -- Data for Gas Mixtures at Pressures From 14.7 Psia to 200 Psia (1)	39-234
6-22	Psychrometric Chart 2 -- Data for Gas Mixtures at Pressures From 100 Psia to 600 Psia (1)	39-235
6-23	Psychrometric Chart 3 -- Correction for Enthalpy of Moisture Content (1)	39-236
6-24	Gas Sampling Equipment	39-238
6-25	Typical BIB Gas System	39-239
6-26	Typical On-line Gas Analysis System	39-241
6-27	Typical Potable Water and Sanitary System	39-243
6-28	Typical Sanitary System Interlock	39-244
7-1	Wet Pot System Schematic Diagram	39-248
7-2	Viewport Insulating Cover	39-252
8-1	Pressurized Tank for Fire Extinguishing	39-256
8-2	Physiologically Usable, Fire-Safe Region for Helium-Oxygen Atmospheres (1)	39-259
8-3	Combustibility of Material in a Chamber Pressurized First with Air, then with Helium	39-260
9-1	Example of Isolation Circuits	39-266
9-2	Example of an Energy-Limited Supply	39-269
9-3	Hull Mounted Submarine Navigation Light	39-271
9-4	Light Pipe Pressure Containing Window	39-272
9-5	Light Pipe on Viewport	39-272
9-6	Hull Mounted Submarine Navigation Light Replacement by Light Pipe Pressure Containing Window	39-273
9-7	Stuffing Tube Type Submarine Navigation Light Replacement by Light Pipe Pressure Containing Window	39-273
9-8	External Light Heat Shield and Dissipation	39-274
10-1	Fundamental Lengthwise Resonant Frequencies for Various Closed Chamber Lengths and Pressures, for Air and Helium/Oxygen Atmospheres	39-279

Figures

Figure	Title	Page
10-2	Example of Audio System	39-281
10-3	Camera Location	39-282
11-1	Suggested Parameters for Mockup of a Seated Operator Console	39-285
11-2	Suggested Parameters for Mockup of Standing Operator Workplaces	39-286

Tables

Table	Title	Page
2-1	Classification of Stresses for Some Typical Cases	39-26
2-2	Stress Intensity k Factors for Various Load Combinations	39-34
2-3	Maximum Stress Intensities in Model No. 1	39-70
2-4	Maximum Stress Intensities in Model No. 2	39-71
2-5	Maximum Stress Intensities in Model No. 3	39-72
3-1	Specified Values of Physical Properties for Each Lot (To be certified by the manufacturer of material)	39-107
3-2	Specified Values of Physical Properties for Each Casting (To be verified by testing of Specimen from each casting or lot as defined in Chapter B.2 or reference 3.1)	39-108
3-3	Conversion Factors for Acrylic Plastic Flat Disc Windows	39-116
3-4	Conversion Factors for Acrylic Plastic 1. Conical Frustum Windows 2. Double Beveled Disc Windows	39-117
3-5	Conical Frustum Windows for Design Pressures in Excess of 10,000 psi (69 mPa)	39-118
3-6	Annealing Schedule for Acrylic Plastic Windows	39-125
3-7	Standing Anatomical Dimensions (inches)	39-130
3-8	Seated Anatomical Dimensions (inches)	39-131
5-1	Hyperbaric Facilities -- Applicable Codes, Specifications, and Standards	39-166
5-2	Class 1 Piping Materials	39-170
5-3	Oxygen Systems Contained in MIL-STD-777	39-174
5-4	Wall Thickness for Bending	39-177
5-5	Physical Properties of Gases	39-185
5-6	Reasonable Velocities for the Flow of Water Through Pipe	39-186
5-7	Reasonable Velocities for Flow of Steam Through Pipe	39-186
5-8	Schedule (Thickness of Steel Pipe Used in Obtaining Resistance of Valves and Fittings of Various Pressure Classes by Test	39-186
5-9	Flow of Water Through Schedule 40 Steel Pipe	39-187
5-10	Flow of Air Through Schedule 40 Steel Pipe	39-188
5-11	Commercial Wrought Steel Pipe Data (15)	39-189
5-12	Typical Dimensions for Commercially Available Tubing	39-195
5-13	Sound Level Considerations in Small Compartments (5.13)	39-206
9-1	Recommended Illumination Levels for Various Task Grades	39-275
12-1	Lubricants -- Oils	39-290
12-2	Lubricants -- Greases	39-290
12-3	Lubricants -- Dry Films	39-291
12-4	Gaskets, Packing, and Bearings	39-291
12-5	Thread Sealants and Lubricants	39-292
12-6	Adhesives, Plastics and Elastomers	39-293
12-7	Standard for Divers Breathing Air	39-294
12-8	Limits for Atmospheric Constituents	39-295
12-9	Maximum Concentration for Some Common Contaminants in Saturation Complex Atmospheres	39-296

CHAPTER 1. HYPERBARIC FACILITIES

1. SCOPE. This manual provides design guidance for hyperbaric facilities and discusses the aspects of construction, fabrication, testing, and cleaning related to design.

2. CANCELLATION. This manual supersedes NAVFAC DM-39, Hyperbaric Facilities, dated October 1972 in its entirety.

3. BASIS OF MANUAL. This manual is essentially based on the experiences of divers, operators, maintenance personnel, and designers of hyperbaric facilities. This includes experience with various materials and procedures for design, fabrication, construction, testing, cleaning, using, and maintaining the parts and components made from these materials.

4. CRITERIA. Principal criteria related to hyperbaric facilities are in the following documents:

Subject	Source
Boiler and Pressure Vessel Code, Section VIII, Divisions 1 and 2	ASME
Safety Standard for Pressure Vessels for Human Occupancy	ANSI/ASME PVHO 1
Power Piping	ANSI/ASME B31.1
Standard for Hyperbaric Facilities	NFPA 56D
Manual on Fire Hazards in Oxygen-Enriched Atmospheres	NFPA 53M

5. FUNCTION. The hyperbaric facility shall provide a safe, reliable, and carefully controlled environment in one or more chambers or pressure vessels (PV) at pressures above atmospheric. The controlled environment may consist of mixed gasses, liquids, or gasses and liquids at closely controlled pressure, temperature, humidity, and chemical composition for the PV occupants (humans, animals, tissue, equipment and materials) in accordance with mission requirements.

6. MISSION. The mission may be diver training, diver treatment, medical treatment, research and development on human and animal health improvement and equipment and material improvement. The mission may require the environment to be unvarying, continually varying, or cyclically varying by manual controls or automatic controls with operator manual override of the PV inputs. The mission may continue for hours, days, weeks or months. The PV occupants and their needs during the mission determine the specific requirements such as dimensions and sizes of the hyperbaric facility.

7. HAZARDS. The hazards inherent in the operation of a hyperbaric facility include the sudden and rapid loss of pressure, fire and explosion of combustible material, and sudden and rapid loss of life-supporting gasses, which can result in serious injury or death to chamber subjects and extensive damage to equipment and material. The designer, as well as the divers, operators, cleaners, and other maintenance personnel must take every effort to minimize these hazards.

8. PERSONNEL SAFETY. The safety of Naval personnel who will use the hyperbaric facility must be assured before the facility is placed in operation. For this assurance, the Navy requires that prior to use, the hyperbaric facility must be evaluated and certified by the cognizant System Certification Authority (SCA) as providing acceptable levels of personnel safety to the occupants and operators. Application of the guidelines herein will not always assure a safe hyperbaric facility nor will it always assure acceptance of the design. The final responsibility for all aspects of a safe design lies ultimately with the designer and cannot be delegated to any manual or textbook.

9. CERTIFICATION. The Navy activity desiring to use the hyperbaric facility shall apply for System Certification by submitting a formal request to the SCA with supporting documentation associated with the design, construction, fabrication, testing, cleaning, and development of proposed operating and maintenance procedures. For additional information on system certification requirements, see NAVMAT P-9290, System Certification Procedures and Criteria Manual for Deep Submergence Systems.

CHAPTER 2. HYPERBARIC PRESSURE VESSELS

Section 1. TYPES OF HYPERBARIC PRESSURE VESSELS AND DESIGN PROCEDURES

1. SCOPE. This section presents general design information for those pressure vessels (PV) which form a part of a shore-based hyperbaric facility. The information includes a description of the included pressure vessels, and a suggested series of technical disciplines and design procedures which can form the basis of design for a structurally adequate pressure vessel. This information is not to be construed as defining a required set of design rules; neither is it to preclude the use of design procedures not specifically detailed or mentioned here.

2. HYPERBARIC PRESSURE VESSELS. The hyperbaric pressure vessel is the major component of the hyperbaric facility as it contains the subject and the required controlled environment. The pressure vessel may be a single chamber but more generally consists of two components, an inner chamber and an outer lock or entrance chamber. For extended use, the PV may be a series of chambers of various types for dry work, wet work, living, sleeping and entrance under pressure.

3. TYPES OF HYPERBARIC PRESSURE VESSELS. Hyperbaric pressure vessels are divided into three types according to the mission, They are:

a. Dry. A pressure vessel which has one or more chambers which always contain gas.

b. Wet. A pressure vessel which has one or more chambers which always contain fresh water or seawater.

c. Combination. A pressure vessel which has one or more chambers which contain either gas or water at various times or a combination of gas and water.

4. CLASSES OF HYPERBARIC PRESSURE VESSELS. Hyperbaric pressure vessels are divided into two classes according to their planned use, They are:

a. Class I Man-Rated. A wet or dry or any combination pressure vessel having, as its primary mission, human beings who are contained in and subjected to a high-pressure environment. A chamber may be single or multichambered.

b. Class II Non-Man-Rated. A wet or dry or any combination pressure vessel not designed for human occupancy, but intended for the testing of equipment or animals under hyperbaric conditions.

5. DESIGN CONSIDERATIONS.

a. Pressure vessels are complex structures containing penetrations for piping, hatches, viewports, and other appurtenances, as well as geometric discontinuities such as cone-to-cylinder intersections and saddles for support systems. The physical properties of the materials from which pressure chambers are fabricated, such as modulus of elasticity, yield strength, ultimate strength and fatigue strength and toughness, interact in a complex fashion. Thus, the design of pressure chambers is usually complex.

b. A pressure vessel changes dimensions in response to pressure variations. Adjoining chambers under different pressures experience different dimensional changes. Varying pressures independently in attached chambers will produce unusual stress patterns. The chamber design must provide for meeting all possible pressure and temperature loading conditions.

c. Many penetrations are required in a wide range of sizes. In particular, the doors for personnel entrance are very large in proportion to the size of the chamber. Service locks and viewports are large and present special problems. The design must provide the necessary vessel reinforcements at each of the penetrations. In addition, human engineering should be applied to the location of doors, viewports, internal piping, furnishings and hardware, and particularly to the accessibility of the emergency equipment, so that the occupants can exist and function in a reasonably hazard-free manner.

d. A major consideration in the design of a hyperbaric pressure vessel is to reduce, to the practical minimum, the possibility of a catastrophic leak while maintaining the desired operational features of the facility. In the usual operational mode, the pressurization and depressurization of the atmosphere is done at a slow controlled rate. A sudden uncontrolled release of the pressurized atmosphere, such as caused by a chamber rupture or large leak, could prove fatal to personnel occupying the pressure chamber and could possibly present a considerable hazard to the chamber operators. Thus, great emphasis must be placed upon the use of proper design, materials, fabrication, quality assurance, inspection, and testing of hyperbaric chambers. Proper design includes the use of modern analytical and experimental stress analysis, metallurgy, joining techniques, and destructive and nondestructive testing procedures.

e. The rules, regulations, and requirements for the design, fabrication, inspection testing and identification of hyperbaric pressure vessels are provided in great detail in the ASME Boiler and Pressure Vessel Code (ASME code), Section VIII, Pressure Vessels, Divisions 1 and 2 (See Reference 1, ASME Boiler and Pressure Code, 1980). If the Hyperbaric Facility is to be man-rated, Section VIII of the Code must be supplemented by ANSI/ASME PVHO 1, Safety Standards for Pressure Vessels for Human Occupancy (Reference 2).

f. Within the constraints of these mandatory codes, a full range of facilities can be designed and built. Relatively simple pressure vessels such as conventional 2 lock recompression chambers, animal and equipment test vessels and various moderate pressure, liquid- and gas-containing vessels are usually made in accordance with Division 1. This Division requires only a cursory determination of stress conditions and then requires the designer to use certain specified "acceptable" geometries. The lack of knowledge concerning the actual stress conditions is compensated for by imposing a high factor of safety upon the nominal stresses that are calculated. For the above classes of pressure vessels, adherence to the requirements of Section VIII, Division 1, results in adequate and safe pressure vessels. For the more complex pressure vessels such as hyperbaric research facilities and vessels for pressures on the order of 1000 psi
and higher Division 2 will usually be used. The procedures of Division 2 are sometimes referred to as Design by Analysis. Regardless of chamber complexity and variability of the material properties, a rational design procedure can be applied to pressure chambers

that will ensure a safe and efficient structure. If the stresses throughout the chamber under the anticipated load conditions are accurately known, then the chamber can be built and can be expected to operate successfully with a very high probability that failure will not occur. This concept forms the underlying philosophy for the ASME Code, Section VIII, Division 2. This philosophy puts the burden of proof upon the designer, requiring the designer of a pressure vessel to determine by use of mathematical and/or experimental means the predicted stress conditions in the vessel under the anticipated load conditions. He must show that the stresses to be developed in the chamber will be equal to or less than a set of stress limits which are imposed by the Code for the particular materials to be used. The Code itself does not specify the manner by which these stresses shall be determined. In a few instances, the Code allows a designer to by-pass detailed analysis if he chooses to conform his design of specific penetrations and fittings to those detailed in some of the Code's sections.

g. When a pressure vessel is being designed in accordance with Section VIII, Division 2, and a cyclic ,life in excess of 5,000 cycles is desired, it may be necessary to consider the fatigue life of the vessel. The procedure for determining whether a fatigue analysis is required is presented in Section VIII, Division 2, Appendix 5, Mandatory Design Based on Fatigue Analysis.

6. MANUFACTURER'S DESIGN REPORT.

a. Manufacturer's Design Report. The manufacturer, or his design agent, furnishes a design report, including calculations and drawings, which show that the design complies with the design specification.

b. Design Report Format. There is no "specified" design report format. However, it must be emphasized that the burden of proof of the adequacy of a design lies with the designer. The design report should be clear and concise, and justify the use of all design procedures and materials. If design practices are followed that are not covered by the Code or are in some other manner deviant from specified practices, then the justification of such action must be documented.

7. USER'S DESIGN SPECIFICATION. Before a designer can plan a facility, the
user, usually with the assistance of the designer, must develop a complete "User's Design Specification." In this specification, the user must spell out in considerable detail the full range of performance required of the facility. The information to be included in this Design Specification is listed in the ASME Code, Division 1, Section U-2, and in Division 2, Article G-3 of Part AG and Article D-1 of Part AD. In general, the "User's Design Specification" will provide as a minimum the following information:

a. Maximum internal working pressures, including static loads.

b. Required sizes and dimensions.

c. Maximum and minimum operating temperatures.

d. Cyclic life.

e. Vessel contents under normal and test conditions.

f. Basic necessary penetrations.

g. Possible earthquake and impact loads.

In addition, the user will usually specify whether a pressure vessel is to be made in accordance with Section VIII, Division 1 or 2 of the ASME Code.

Section 2. MATERIALS FOR HYPERBARIC VESSELS

1. MATERIALS. This section contains guidelines for classifying materials and components within the Scope of Certification & Safety Standards herein. Classification of a material or component is dependent on its application and service experience. A material or component which has had previous experience or use in a Naval environment does not, however, automatically place it in Class 1. The proposed application, configuration, design concepts, and joining techniques must be reviewed to determine the proper class for each material or component. In other words, previous Naval experience in an application or configuration which cannot be correlated to the proposed application or configuration would, in general, disqualify the item for Class 1 and place the material or component in Class 2, which would require additional proof testing to justify its use. It is emphasized that the material and component classes detailed in this manual should not be confused with the hazard level categories of MIL-STD-882. The material and component classes of this manual were conceived to aid in assessing the reliability of materials and components in specific hyperbaric applications. They do not, in all cases, correspond to the MIL-STD-882 hazard level categories which are assigned to the possible failure of such materials or components.

The applicant must justify the materials and their applications as used in the design of the hyperbaric facility for the expected service environments. All of the materials considered to be within the certification scope shall be identified. The relative location of the materials should be included and verification of their compatibility problems are a concern.

2. MATERIAL CLASSES. It is anticipated that some hyperbaric facilities will be designed to operate at greater depths and that new materials, new applications for time-tested materials, and new configurations may be employed. It is not the intent of this manual to limit the materials and their applications. The intent is to permit the use of new materials in new applications whenever sufficient data exist to show that the material adequacy of the hyperbaric facility, and hence, the safety of the personnel utilizing the facility is reasonably assured. The less the amount of available information and experience with a material or application, the greater the burden upon the applicant to justify the adequacy of the proposed material or application. For the purpose of System Certification, the possible materials and/or components are grouped into the following three classes:

a. CLASS 1, Material of proven characteristics. In general, Class 1 materials and components are those for which considerable operating experience is available. For pressure vessel materials and external piping within the boundary of certification, this would include experience in fabrication, testing and operation in a marine environment. For piping systems, compatibility with the internal medium would also have to be known.

The following is a list of typical materials and components which are generally considered to fall into Class 1. Untested or unusual configurations or applications of these materials and components might, however, place them in Class 2.

PRESSURE HULL/VESSEL MATERIALS

Ferrous

HY 80/100	Plate	MIL-S-16216*	When fabricated
	Forging	MIL-S-23009	and welded to
	Bars	MIL-S-21952	requirements of
	Casting	MIL-S-23008	MIL-STD-1693 (YD),
	Heads	MIL-S-24551	or ANSI/ASME PVHO 1
Commercial HY-80	Plate	ASTM-A-543**	

* These military specifications include impact property requirements for HY 80/100 material in military application. Consideration will be given to lower impact values for HY 80/100 where the material meets the toughness requirements of ANSI/ASME PVHO 1.

Carbon steel for pressure	Plate	MIL-S-24113**	When fabricated
Vessels for moderate and	Plate	ASTM A-537**	and welded to
Lower temperature service	Plate	ASTM A-516, Grade 70**	MIL-STD-1693
	Forging	ASTM A-350**	(YD) or ANSI/
			ASME PVHO 1

** When specified to a maximum Nil-Ductility Transition (NDT) Temperature as required for material in ANSI/ASME PVHO 1 or a dynamic tear ANSI/ASTM E 604 value of at least 200 ft-lbs from a 5/8 inch specimen tested at the minimum design temperature.

Non-Ferrous

Plate	ASTM B-209 Limited to alloys 5086 or 5456 Temper H-116
Tubing	ASTM B-210 Limited to alloy 5052 or 5086
Bars	ASTM B-221 Limited to 5xxx alloys
Forgings	ASTM B-247
Welding Filler Material	ASTM FA-5.10 Alloy Type ER 5356

Fabrication, Welding & Inspection should be to AWS D1.5 Structural Welding Code--Aluminum.

BOLTING MATERIAL

Non-Ferrous

Ni-Cu Al Alloy (K-monel)	QQ-N-286	Fabricated to the requirements of Screw Thread Standards for Federal Services Handbook H-28 and MS18116
Ni-Cu	QQ-N-281	

NOTE: There should be a minimum of 5 Rockwell C hardness between the nuts and bolts to prevent galling.

Ferrous

High Strength Bolts	ASTM-A-325	Bolts should not be galvanized at hardness above 32. RC for marine environment
Quenched and tempered alloy steel bolts	ASTM-A-490	
Hardened washers	ASTM-F-436	
Heavy hex nuts	ASTM-A-563	

ANSI/ASTM-F-606 Standard Method for Conducting Tests to Determine the Mechanical Properties of Externally and Internally Threaded Fasteners, Washers and Rivets shall be used.

PIPING, ELECTRICAL AND LIFE SUPPORT SYSTEMS MATERIALS AND COMPONENTS

Stainless Steel	Pipe	ASTM A-312 Alloys Grs: TP 310 & 316
	Forgings	ASTM A-336
	Flanges & Fittings	ASTM A-350
	Castings	ASTM A-352
Ni-Cu (Monel)	Cast	QQ-N-288
	Wrought	QQ-N-281
	Tubing	MIL-T-1368 Class A, ASTM B-466 Alloy 720
70/30 Cu-Ni	Cast	MIL-C-20159
	Wrought	MIL-C-15726 ASTM B-402, Alloy 715
	Tubing	MIL-T-16420 ASTM B-466, Alloy 715
Valve Bronze		MIL-B-16541 ASTM B-62 ASTM B-61

Seawater Valves		MIL-V-24287
Aluminum Bronze (min. 4% Ni)	Cast	MIL-B-23921 ASTM B-271
	Wrought	MIL-B-24059
	Tubing	ASTM-B-210

b. CLASS 2, Material of known properties. Materials and components in this class have not been used extensively in similar applications but are classed as conventional due to identification by military specifications, federal specifications, or recognized American commercial standards such as those published by the American Society of Mechanical Engineers or the American Society for Testing and Materials. Materials or components available as standard stock items built to a recognized commercial or Federal standard will be considered in this class. Examples of materials that are presently considered to be in this class are certain types of aluminum, titanium, and some high-strength low-alloy steels. The determination of acceptable properties and allowable operating stress values will be based on the recommendations and supporting information provided by the applicant.

For pressure vessel and other structural parts, the applicant should submit the following information in justification of the use of a Class 2 material:

(1) The applicable military, federal, or industrial specification involved with a detailed list of exceptions or additions to comply with ANSI/ ASME PVHO 1.

(2) Material properties for the base metal in the condition to be used and, if the material is to be welded, for the weld metal and the heat-affected-zone material.

(3) Tensile properties including tensile strength, yield strength, percent elongation, reduction of area, rate of loading, elastic modulus and engineering stress-strain curve (tension and compression) for the material. The material specimens tested should represent any applicable defects and variations in material properties introduced by manufacturing and fabrication processes.

(4) Impact and fracture toughness properties over a range of temperatures sufficient to fully define the fracture characteristics of the material for the intended service environment (e.g., transition temperature and shelf energy values). Desirable tests would include Charpy V-notch transition curves and dynamic tear as well as drop-weight tests per ASTM procedures, and/or explosive bulge tests. Where appropriate, the applicant should show that the material's fracture toughness properties in the applicable environment (e.g., marine, seawater, air) are adequate for its intended use. In this regard, a fracture mechanics type of test may be useful to study the effect of seawater on fracture resistance.

(5) Proof of weldability and fabricability (if fabrication process includes welding). This would include results of tests such as prescribed in MIL-STD-1693 (YD) Fabrication Welding and Inspection of Hyperbaric Chambers

and other critical Land-Based Structures for qualification of welding procedures. These tests results should include tensile and impact properties of both weld metal and heat-affected base metal. A list of specific applications where the material has been successfully used in stressed applications should also be provided. Details such as quantities and thickness of material used, welding processes used, inspection standards used, manufacturer's name and location, location of the component in service and length of service, pre-weld and post-weld heat treatments, if any, and type of requirements and inspections required of the material supplier in the material purchase specifications.

(6) Fatigue data, preferably data in the high strain low-cycle range (below 10,000 cycles), which considers the effect of the environment (e.g., seawater, air, O_2, HeO_2, fresh water, mercury).

(7) Basic process to be used in producing the material and the electrodes if the fabrication process included welding as well as other fasteners, if involved.

(8) Data over a sufficient time period to justify the adequacy of the material with respect to general corrosion and to stress-corrosion cracking in its intended environment (e.g., seawater, marine atmosphere air).

(9) Nondestructive test requirements to be applied to base material and weld joint, as appropriate.

c. CLASS 3, Materials whose properties are to be proven. Materials and components for which definitive information and experience are not available are considered in this class. The basis for testing and the criteria for acceptance of new materials and components will not automatically be the same as for those currently in use. The proof of acceptability of the material or component and justification of the acceptance criteria must be provided by the applicant, THIS MANUAL NEITHER SPECIFIES ACCEPTANCE TESTS FOR NEW COMPONENTS OR MATERIALS NOR ARBITRARILY DEFINES ALLOWABLE OPERATING PARAMETERS. For example, the applicant should demonstrate the effect of defects, manufacturing tolerances, and production variations upon the reliability of the material or component by appropriate model and/or prototype testing in a simulated service environment. The applicant must establish that the new material or component possesses at least the same factor of safety as is provided by proven materials in a similar application.

Examples of Class 3 structural materials are those which are generally characterized by low ductility such as ultra-high-strength metals, solid glass, glass-reinforced plastic, acrylic plastics and ceramic material.

For pressure vessels and other structural materials, as a minimum, the applicant should submit the following information in justification of the use of a Class 3 material:

(1) Material chemistry requirements.

(2) Material mechanical properties.

(3) Basic process to be used in producing the material. Sufficient information is required to demonstrate that the procedures ensure that repeatable material properties are obtainable by the process used.

(4) Data demonstrating lack of susceptibility to failure when subjected to dynamic shock.

(5) Effect of flaws such as cracks or defects on material performance.

(6) Effects of temperature on material performance and resistance to crack propagation.

(7) Results of tests to destruction of samples fabricated from the materials and comparison of these results with the design basis predictions of the failure point.

(8) Fatigue data in the high-strain, low-cycle range (less than 10,000 cycles) in environment (e.g., seawater, marine atmosphere, air, HeO_{2}).

(9) Data covering an extended time period establishing the adequacy of the material with respect to general corrosion and to stress-corrosion cracking in seawater and marine atmosphere in the presence of cracks, assuming the material is exposed to this type of environment.

(10) Fabrication characteristics including data verifying the repeatability of results.

(11) Nondestructive test requirements to be applied to the base material and joints as appropriate.

(12) Hazards involved in fabrication or use of material with respect to toxicity or flammability.

3. MATERIALS PERMITTED. All three classes of materials may be used for pressure vessel components. However, it is recommended that only Class 1 and Class 2 materials be considered for Class I pressure vessels. The use of Class 2 materials requires additional justification to assure high reliability performance. Even greater justification is required when Class 3 materials are used for Class 1 vessels.

4. MATERIALS SPECIFICALLY NOT PERMITTED. The following materials are not permitted for pressure vessel fabrication:

a. Any Class 2 or Class 3 material which cannot be shown to be justified under the restrictions imposed by the ASME Code or other Navy requirements.

b. Magnesium and magnesium alloys.

c. Beryllium.

d. Steel: ASTM SA-36, SA-283 and SA-515 plate.

e. Any material which will enter into a rapid chemical reaction with seawater, gaseous oxygen, or any other media to be used inside the vessel.

f. Any material whose toughness at the minimum operational temperature is deemed insufficient (see below).

5. MATERIAL TOUGHNESS. If a pressure vessel contained no defects or flaws, then the ductility of the vessel's material would not be an important design parameter so long as the stresses induced in that material were kept below its ultimate strength in local regions and its yield strength in general regions. The "no flaw" or "zero defect" condition is not practical because even raw materials have flaws. Defects are also induced in a structure during fabrication and by certain mechanisms during its operational life. Such mechanisms include environmental attack (corrosion, erosion, stress corrosion, etc.) and mechanical damage (unintentional gouging, secondary loading, fatigue loading, etc.). It is therefore important to know how a stressed material will respond to a defect, be it either geometrical or metallurgical.

a. Notch Sensitivity. Under certain conditions, many metals and some other materials may fail in a brittle manner even though the same materials show good elongation or ductility in a slow-tension test. These materials are said to be "notch sensitive" for those conditions under which they experience brittle fracture or exhibit low energy shear. The three common conditions which tend to promote a brittle fracture in a material normally considered ductile are (1) high velocity stress application, as in impact, (2) reduced operational temperature, and (3) stress concentrations, such as exist at the root of a notch, where plastic flow cannot take place readily. Conditions (1) and (3) can be readily evaluated by a standard Charpy "V" Impact Test at room temperature on materials characterized by dynamic shear or sufficient Charpy data to establish an RAD curve, Figure 2-1. For steels and some other materials, "notch sensitivity" increases dramatically as the temperature is reduced over certain temperature ranges. This can be determined reliably by Nil-ductility transition (NDT) data and Charpy test data as follows:

(1) The NDT test performed per ASTM-A-208 will demonstrate the temperature below which the material will act brittle and notches will propagate as cracks at low stresses (5 to 8 KSI in steel). Typical specimens are shown in Figure 2-2.

(2) Crack arrest transition (CAT) curves (Figure 2-3) developed from Charpy data over a range of temperatures allow the prediction of the performance of material in the presence of a high activity flaw at different stress levels in as-welded structures. As welded, structures contain residual welding stresses at the yield point of the weaker component which may be the base material, heat-affected zone (HAZ) or weld material (Figure 2-4).

(3) Dropweight tear energy versus yield strength curves from dynamic tear tests, Figure 2-5, for low alloy high strength steels and for aluminum alloys, Figure 2-6, allows the prediction of critical flaw sizes for fracture-safe performance. Note the point where the flaw size becomes too small to be consistently demonstrated by practical NDT processes.

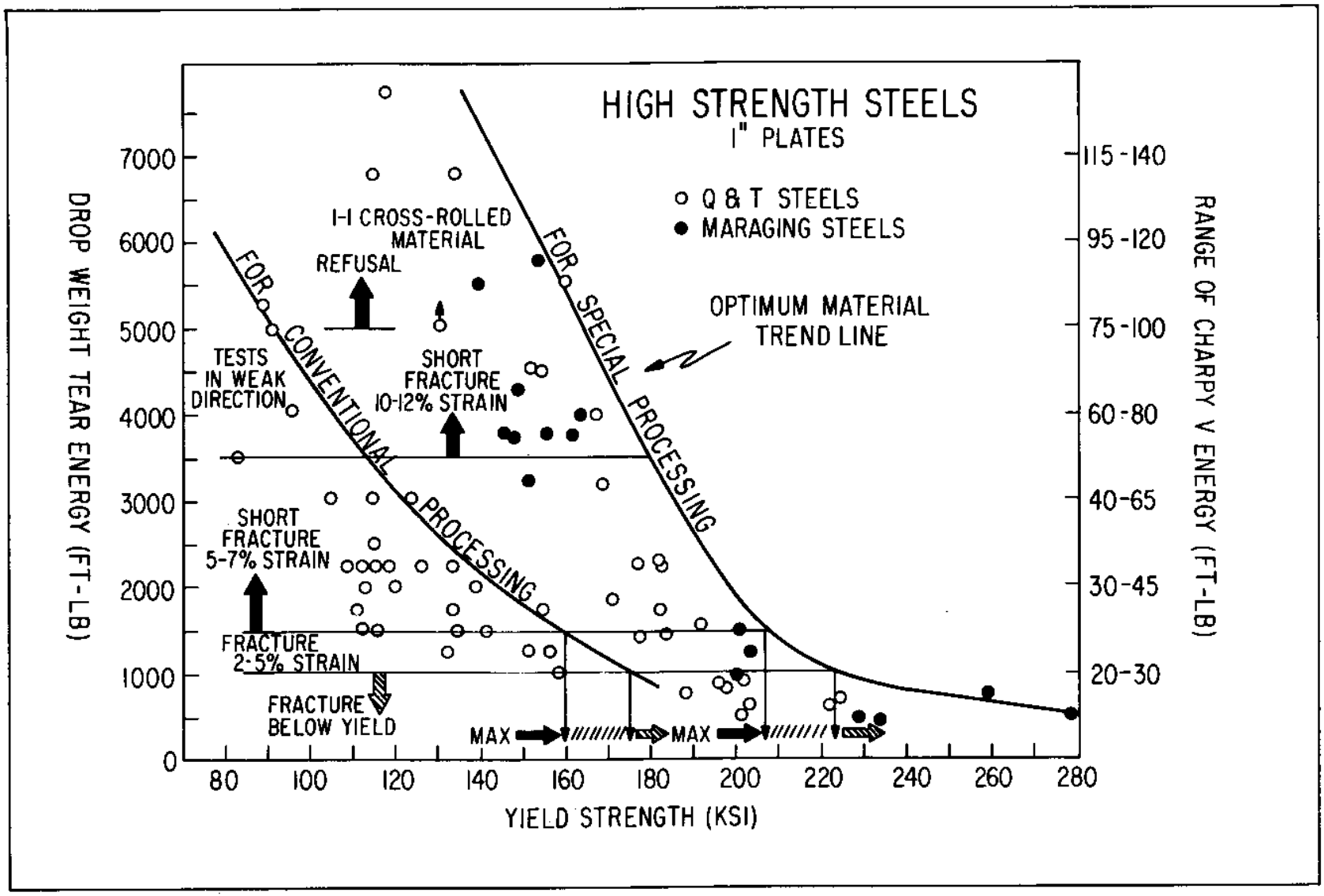

FIGURE 2-1
Typical Charpy Test Data on High Strength Steels

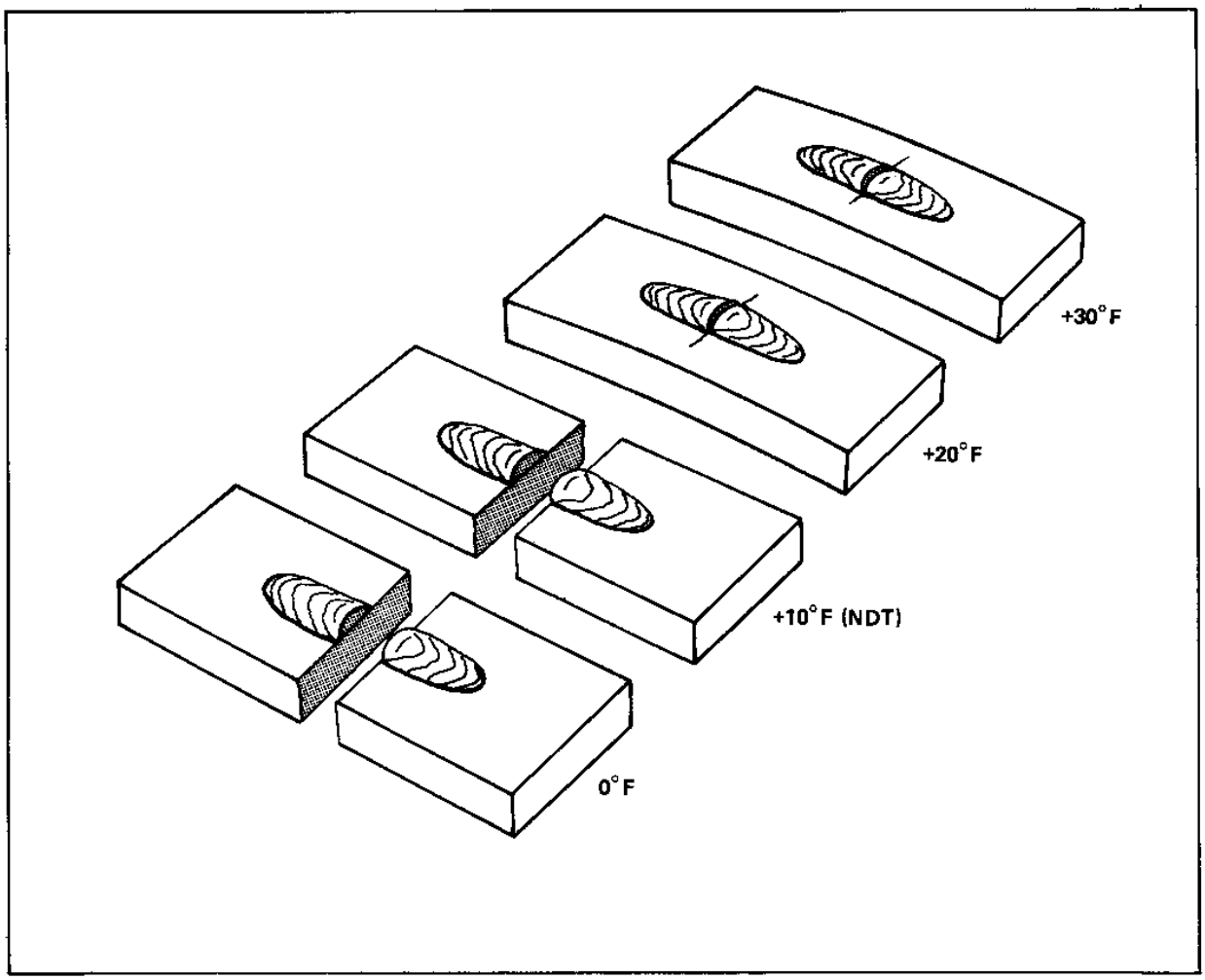

FIGURE 2-2
Typical NDT Specimen Performance at Different Temperatures when Tested to ASTM A-208

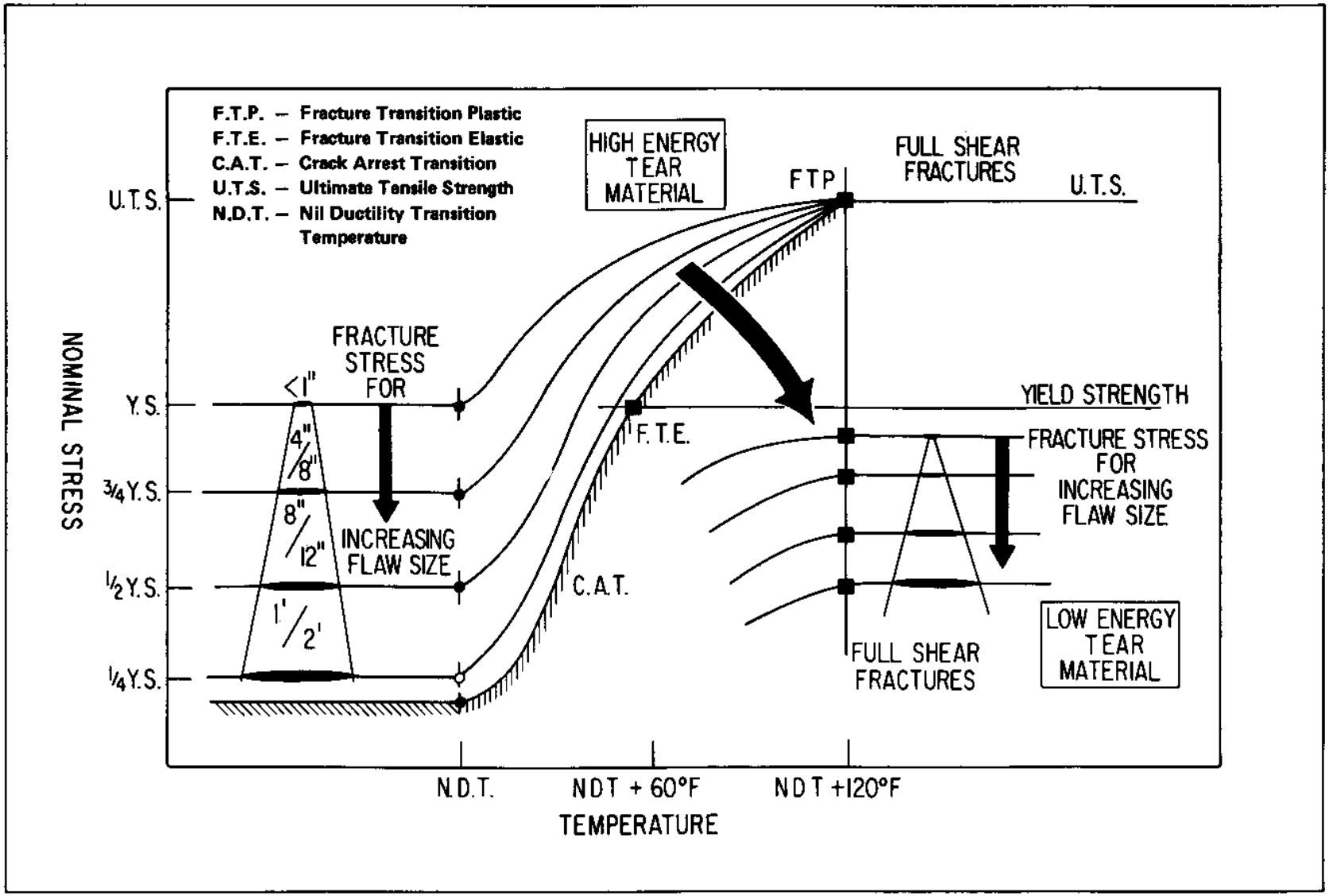

FIGURE 2-3
Typical Charpy V Impact Test Data

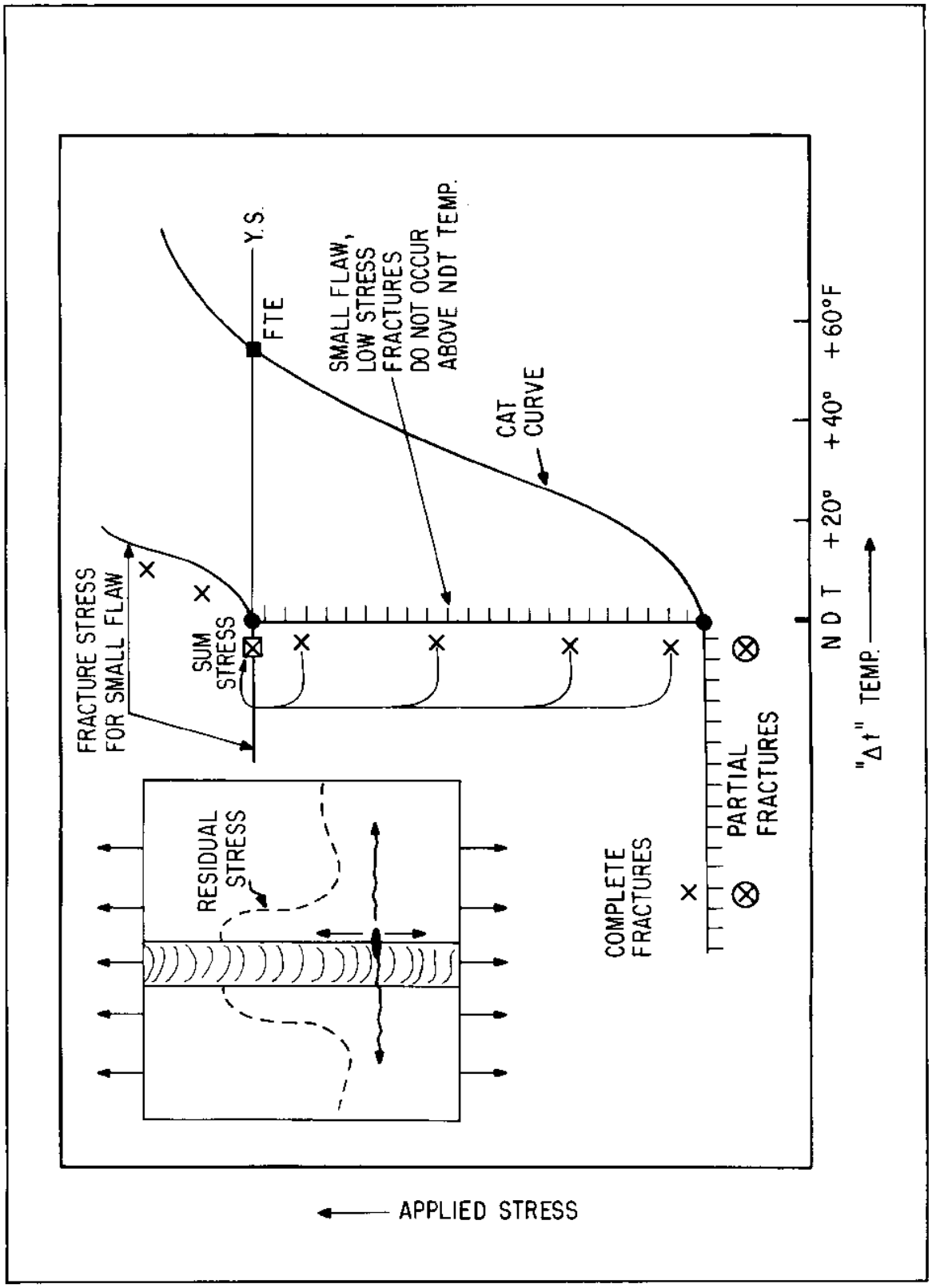

FIGURE 2-4
Crack Arrest Curve Overlayed to Demonstrate the Residual Stress Pattern Associated With Weldment

Residual Stress Pattern Associated With Weldment]

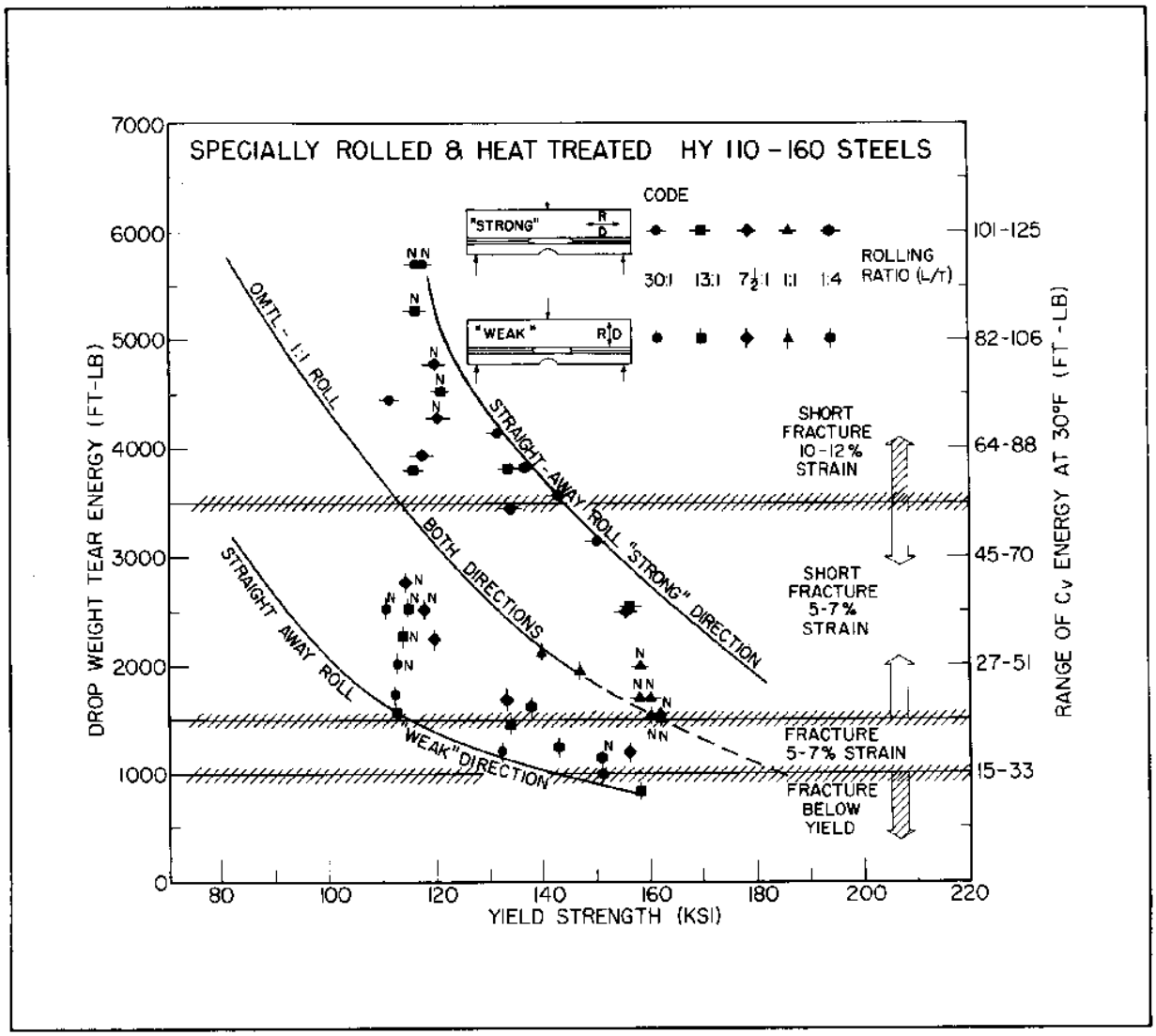

FIGURE 2-5

Toughness Relative to Direction of Rolling and Effect of Rolling Ratio of High Strength Steels

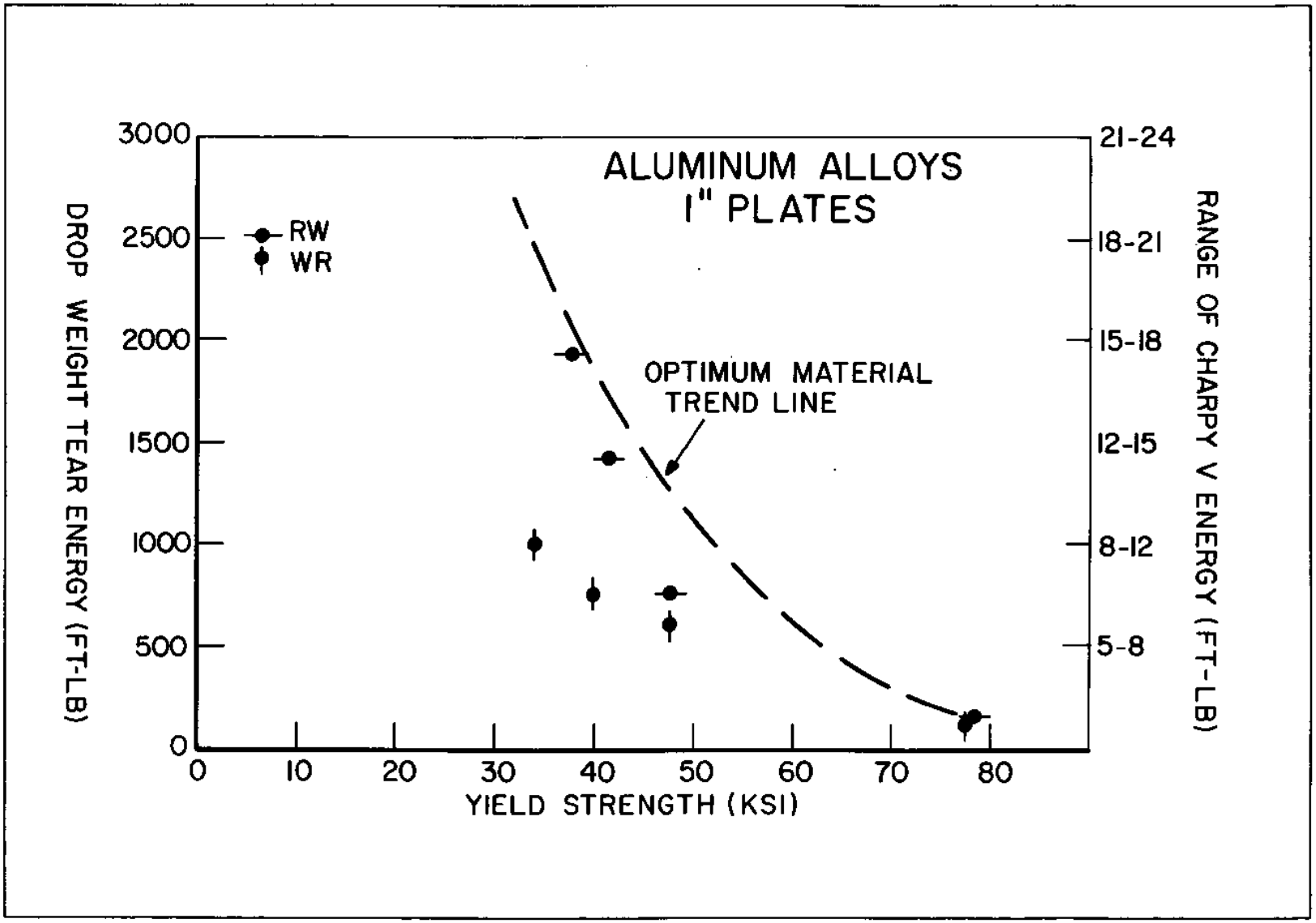

FIGURE 2-6
Toughness Relative to Direction of Rolling of Aluminum Alloy Plates

The Naval Research Laboratory (NRL) defines the three (3) critical points on crack arrest curves as follows:

(a) Nil-Ductility Transition (NDT) Temperature. Below this temperature the steel does not deform (around a defect of sufficient size) prior to fracturing, and the fracture occurs immediately upon reaching the yield point. The fracture propagation is unstable and it propagates easily through material stressed in the elastic region. (See Reference 3, Pellini, Fracture Safe Design of Steel Structures, 1969.)

(b) Fracture Transition for Elastic Loading (FTE). Below this temperature and above NDT Temperature, the defect size necessary to initiate fracture will increase greatly but once fracture initiates it will propagate through material stressed in the elastic zone. At temperatures above FTE, fractures will propagate only through material stressed in the plastic zone. At FTE large amounts of plastic deformation are required to initiate fracture. As the temperature is lowered toward the NDT Temperature, the amount of plastic deformation and hence the energy required to initiate the fracture decreases.

(c) Fracture Transition for Plastic Loading (FTP). Above this temperature, brittle or cleavage fractures do not take place in an otherwise ductile material. That is, brittle fracture cannot take place even though the material is severely plastically deformed.

For more detailed information on notch toughness and design, see the applicable reports available from NRL, Code 6300, Washington, D.C. (See References 4 and 5, Pellini, Fracture Analysis.)

6. CORROSION CONSIDERATIONS. Some shore-based byperbaric facilities will have pressure vessels containing seawater and/or gasses which are either pure oxygen or which have a high percentage of oxygen as one of their constituents. The materials from which these pressure vessels are fabricated could be subject to "wet" corrosion and/or to "dry" oxidation. Corrosion effects are considered during the initial selection of a material, and when determining the dimensional changes and/or defect-producing phenomenon applicable to the environment and the life expectancy of the vessel. As specific corrosion problems arise, they should be referred to an expert in corrosion engineering.

Materials for containment of gasses containing over 40% oxygen at pressures above 270 psig or which could contribute fuel in case of a fire, should be stainless steel type 310 or 316, monel, bronze, or copper. Bronze and copper should be used in dry gas systems only. Unless justified by design use parameters, hyperbaric chambers of ferritic materials which are exposed to seawater (saltwater or other electrolyte) or sea spray environment shall be provided with a 1/16-inch corrosion allowance.

If protective materials are used, they may be organic in nature, such as paint, or may be metallic coatings which in themselves are not subject to corrosion, such as nickel, gold, chromium, etc. The main problem encountered in the use of coatings is the near impossibility of maintaining the integrity of the coating. Small faults in the film, such as pin holes, allow corrosion to occur in the base metal under the film in the vicinity of the hole, leading

to progressive destruction of the coating by blistering and scale and the enlargement of the corroding surface. In the case of most metallic coatings, small pin hole faults in the coatings cause intensified pitting and progressive destruction of the coating and the substrate by galvanic attack. The use of coatings, particularly inert metallic coatings, is not a recommended procedure to be used alone to prevent corrosion in long-time exposure situations. Regular and frequent inspection and maintenance practices are necessary to protect the coatings employed.

Section 3. DESIGN

1. DESIGN. This section discusses the applicability of Section VIII, Division 2, of the ASME Code to the design of pressure vessels to be used as components of hyperbaric facilities. The design criteria contained in Section VIII, Division 2 are explained in some detail, followed by paragraphs dealing with the relation of these design criteria to the two classes of pressure vessels described earlier. Examples are given of the design of two simple pressure vessels using the stress analysis method based on the mandatory Appendix 4 of Section VIII, Division 2.

2. METHODS OF DETERMINING STRESSES. The basic intent of design by analysis is to determine the stress conditions in a pressure vessel under load for each load condition for the vessel's entire operational life. In order to meet the intent and specifications of Section VIII, Division 2, the designer must carry out a sufficiently detailed stress analysis of the vessel to show compliance with the stress limitations imposed by the Code for the material from which the vessel is to be fabricated. The designer may specify any manner by which to determine the stresses in the vessel under load, so long as use of the methodologies employed.

a. Stress Analysis Methods. In general there exist three basic groups of stress analysis methods:

- Classical
- Experimental
- Computer Programs

(1) Classical Methods. Classical methods are defined as those works based on continuum mechanics and as particularly applied to shell and plate theory, that are exemplified by the works of Timoshenko (see Reference 6, Theory of Plates and Shells, 1959), Flugge (see Reference 7, Stresses in Shells, 1966), Novoshilov (see Reference 8, Thin Shell Theory, 1964), and Kraus (see Reference 9, Thin Elastic Shells,1967). A "handbook" type presentation titled, Shell Analysis Manual, by E.H. Baker, et al., (see Reference 10, Shell Analysis Manual, 1968) may be quite useful to the designer. Appendix 4 of Section VIII, Division 2 of the Code presents classical design based on stress analysis in nine articles as follows:

Article 4-1 - Stress analysis
Article 4-2 - Analysis of cylindrical shells
Article 4-3 - Analysis of spherical shells
Article 4-4 - Design criteria and formula for torispherical and ellipsoidal heads
Article 4-5 - Analysis of flat circular heads
Article 4-6 - Pressure stresses in openings for fatigue evaluation
Article 4-7 - Discontinuity stresses
Article 4-8 - Thermal stresses
Article 4-9 - Stresses in ligaments

Article 4-6, Pressure Stresses in Openings for Fatigue Evaluation, is particularly valuable in presenting a means of carrying out a fatigue evaluation of certain geometries of isolated nozzles. Article 4-7, Discontinuity

Stresses, presents in a clear and concise manner a method of determining the stresses in regions of geometry changes, at least for a body of revolution.

(2) Experimental Methods. Experimental methods are defined as means of determining stresses using strains and/or displacements measured on the actual structure or model of the structure. Experimental procedures are acceptable methods for determining the stress conditions in areas where classical methods are not available. Further, by the proper use of model techniques, experimental methods may be used for the complete stress analysis of the entire vessel.

CAUTION: If modeling techniques are employed, a 1 to 1 correlation between the model behavior and the actual vessel under the anticipated loadings must be established and form a conspicuous part of the method justification.

Besides the comprehensive bibliography of books dealing with experimental methods, the designer should be aware of newly developing experimental procedures as presented by the publication Experimental Mechanics, the monthly Journal of the Society for Experimental Stress Analysis.

(3) Computer Programs. Computer Programs are tools allowing either numerical solutions of classical methodology or a nodal analysis of the actual structure approximated by a network of "finite elements." computer codes have been written which allow the solution of heretofore "unsolvable" problems. To a great extent, the development of computer technology has allowed the implementation of the concept of design by analysis which forms the basis of Section VIII, Division 2. Pressure vessels, for the most part, are complicated structures and detailed stress analyses using classical methods require long and tedious calculations. For certain geometric configurations, there exist no "classical" methods of solution. During the last decade literally thousands of computer programs have been written to carry out hundreds of different types of analysis. In the area of shell analysis alone, there are probably close to 1000 programs that are in use. Many programs are proprietary possessions of individual companies and others are, for one reason or another, unavailable. However, almost all programs developed by government funding are available from certain government collection agencies. These agencies are:

(a) The Argonne Reactor Code Center at the Argonne National Laboratory (AEC)

(b) The COSMIC Computer Center at the University of Georgia (NASA)

(c) The Air Force Flight Dynamics Laboratory at Wright-Patterson Air Force Base.

These agencies will supply a listing and cost of available programs upon request. References 11 through 15 give an overall view of the state of the art of computer technology applicable to pressure vessel analysis.

Finally, the designer is again cautioned that justification of the use of a certain program to carry out the required design analysis remains the burden of

the designer. If the program is a well known and well used one such justification may simply be a detailed description of the model geometry, input loads and boundary conditions applied. In other cases, the justification may require full documentation of the program and examples of analyses carried out by the use of the program that can be easily checked by "classical" analysis, "exact" analysis, or data existing in the literature.

b. Stress Intensity Limits. There are two mandatory appendices of Section VIII, Division 2, which form the entire basis of the concept of design by analysis. These are Appendix 4, Design Based on Stress Analysis and Appendix 5, Design Based on Fatigue Analysis. A detailed understanding of these two appendices is necessary to understand Section VIII, Division 2. Both appendices deal with the establishment of "stress intensity limits" and the interpretation of stresses calculated by the designer to meet these limits. Appendix 4 gives such information as pertains to vessels that are to be loaded either statically or cyclically, while Appendix 5 gives further information to be applied to vessels that are to be loaded cyclically. Note carefully that the data presented in Appendix 4 must be applied in all cases of loading.

(1) Appendix 4, Article 4-1 Design Based on Stress Analysis. This article presents the methods that a designer should use in:

(a) Classifying the type of stresses that he has calculated;

(b) Converting these classes of stress into "stress intensities"; and

(c) Comparing the calculated "stress intensities" to the Code-allowable "stress intensity limits" for the material from which the vessel is fabricated.

A brief description is given below of part of the information found in Article 4-1. The designer is urged to read and fully understand the complete article.

c. Types of Stresses. In Article 4-1 stresses are broadly categorized into three groups:

(1) Primary stress. Such a stress is imposed by loading which is necessary to satisfy equilibrium and which is not self-limiting. That is, as the loading increases, the distortion of the area over which this stress acts continues to increase until failure.

(a) Primary general membrane stress. This is a membrane stress existing in a shell at a position removed from any gross geometric discontinuity.

(b) Primary local membrane stress. This is a membrane stress existing close to a geometric discontinuity which decreases rapidly away from that location.

(c) Primary bending stress. This is a bending stress that is induced directly by the pressure load acting upon a specific geometry and is not induced by discontinuity conditions.

(2) Secondary stress. Such a stress is generally imposed by constraints between adjacent parts of a shell and is self-limiting. That is, if local yielding takes place as the load is applied, local distortion relieves the stress in this area and the load is redistributed to the surrounding material.

(3) Peak stress. Such a stress is imposed by very local geometric discontinuities such as cracks, grooves, and fillets, and by certain types of thermal loading conditions.

(4) Code identification. The Code identifies those five (5) stresses by the following symbols:

Primary general membrane stress	- P_m
Primary local membrane stress	- P_L
Primary bending stress	- P_b
Secondary stress	- Q
Peak stress	- F

d. Stress classification. Table 4-120.1 of the Code, "Classification of Stresses for Some Typical Cases," is shown here as Table 2-1. It should be of assistance in classifying the types of stresses in pressure vessels for hyperbaric facilities.

In the most general cases of shell analysis, the five types of stresses described above will contain shear stresses as well. If so, then each group of stresses must be converted into principal stresses, [sigma]1, [sigma]2, and [sigma]3. Fortunately, most pressure vessels usually consist of shells of revolution and, except in the vicinity of penetrations and nonsymmetrical supports or loads, the stresses as calculated are principal stresses, usually denoted by $[\sigma]_t$, $[\sigma]_{*l}$, or $[\sigma]_r$.

In many types of shell analysis, particularly those carried out by computer methods, the stress determined at any point will be a total stress. The designer should break down this total stress to the five component types described.

For each classification of stress as defined above, there may be more than one set of stresses. This can arise, for instance, if a pressure vessel is loaded by more than one type of load. One example of this is a pressure vessel with high internal pressure and having significant thermal gradients in its walls. The designer may choose to develop the stresses induced by the thermal gradients separately from the stresses induced by pressure, thus giving two sets of stresses at any point in the shell.

e. Determining stress intensities. After grouping the principal stresses at each point of interest in the vessel in their respective classes, the stresses in each group are added to achieve one set of three stresses for each class, i.e., $[\sigma]_1$, $[\sigma]_2$, and $[\sigma]_3$. The "stress intensity" for each class is then calculated as the greatest absolute value of the differences of any two of the three stresses, i.e.,

TABLE 2-1
CLASSIFICATION OF TRESSES FOR SOME TYPICAL CASES

Vessel Component	Location	Origin of Stress	Type of Stress	Classification
Cylindrical or spherical shell	Shell plate remote from discontinuities	Internal pressure	General membrane Gradient through plate thickness	P┌m┐ Q
		Axial thermal gradient	Membrane Bending	Q Q
	Junction with head or flange	Internal pressure	Membrane Bending	P┌L┐ Q
Any shell or head	Any section across entire vessel	External load or moment, or internal pres-sure	General Membrane averaged across full section. Stress com-component perpendic-ular to cross section	P┌m┐
		External load or moment	Bending, across full section. Stress com-ponent perpendicular to cross section	P┌m┐
	Near nozzle or other opening	External load moment, or in-ternal presssure	Local membrane Bending Peak (fillet or corner)	P┌L┐ Q F
	Any location	Temp. diff. between shell and head	Membrane Bending	Q Q
Dished head or conical head	Crown	Internal pressure	Membrane Bending	P┌m┐ P┌b┐
	Knuckle or jun-ction to shell	Internal pressure	Membrane Bending	P┌L┐ [1] Q
Flat head	Center region	Internal pressure	Membrane Bending	P┌m┐ P┌b┐
	Junction to shell	Internal pressure	Membrane Bending	P┌L┐ Q
Perforated head or shell	Typical liga-ment in a uni-form pattern	Pressure	Membrane (av. thru cross section) Bending (av. thru width of lig., but gradient thru plate Peak	P┌m┐ P┌b┐ F
	Isolated or	Pressure	Membrane	Q

	atypical		Bending	F
	ligament		Peak	F

TABLE 2-1
CLASSIFICATION OF STRESSES FOR SOME TYPICAL CASES (CONTINUED)

Vessel Component	Location	Origin of Stress	Type of Stress	Classification
Nozzle	Cross section perpendicular to nozzle axis	Internal pressure or external load	General membrane (av. across full section.) Stress component perpendicular to section	P_{m} See 4-138
		External load or moment	Bending across nozzle section	P_{m} See 4-138
	Nozzle wall	Internal pressure	General membrane Local membrane Bending Peak	P_{m} See 4-138 P_{L} Q F
		Differential expansion	Membrane Bending Peak	Q Q F
Cladding	Any	Differential expansion	Membrane Bending	F F
Any	Any	Radial temperature distribution[2]	Equivalent linear stress [3] Nonlinear portion of stress distribution	Q F
Any	Any	Any	Stress concentration (notch effect)	F

NOTES:

[1] Consideration must also be given to the possibility of wrinkling and excessive deformation in vessels with large diameter-to-thickness ratio.
[2] Consider possibility of thermal stress ratchet.
[3] Equivalent linear stress is defined as the linear stress distribution which has the same net bending moment as the actual stress distribution.

$$S = \text{greatest of} \begin{cases} |\sigma_1 - \sigma_2| \\ |\sigma_2 - \sigma_3| \\ |\sigma_3 - \sigma_1| \end{cases}$$

Note carefully that the wording of the Code at this point may be misleading, for P_m and P_L may now represent not the sum of the stresses as defined previously, but rather "stress intensities."

Figure 4-130.1 "Stress Categories and Limits of Stress Intensity" from the Code is shown here as Figure 2-7. Note that for each class, and for the succeeding sums of each class, there is a "Stress Intensity Limit" (shown in a circle), which is a multiple of the "Design Stress Intensity Value," S_m, for the material as previously defined. The correct interpretation of Figure 2-7 is that the following conditions must be met for all points throughout the body of the vessel.

(a) $P_m \leq S_m$

(b) $P_L \leq 1.5\ S_m$

(c) P_m (or P_L) $+ P_b \leq 1.5\ S_m$

(d) $P_L - P_b + Q \leq 3.0\ S_m$

(e) $P_L + P_b + Q + F \leq S_a$.

For a vessel subjected to static loading only, the failure to meet any condition except (e) means that the vessel is unacceptable. For a vessel subjected to cyclic loading sufficient to require a fatigue analysis, the failure to meet any condition including (e) means that the vessel is unacceptable.

Appendix 5, Article 5-1, "Design Based on Fatigue Analysis." This article presents the methods of determining the adequacy of a code vessel to sustain a given number of load cycles. The application of its provisions are mandatory if a fatigue evaluation is required. The requirement for a fatigue analysis is established by examining the operational conditions of the vessel from the viewpoint of the specifications of Paragraph AD-160, "Fatigue Evaluation" in Article D-1, "General" of Part AD, "Design Requirements," of Section VIII, Division 2. Before a fatigue analysis can be carried out, a complete stress analysis of the vessel must be conducted and all the stress intensity limits established. This means, in essence, that at this design stage the vessel is adequate to sustain a static load condition.

The amplitude of alternating stress intensity must now be determined. This is the portion of the quantity formed of $P_L + P_b + Q + F$ that is cyclic in nature. There will be some conditions where the entire sum of these quantities is cyclic as in start-up and shut-down operations. For most conditions, only part of those quantities will be cyclic and the amplitude of alternating stress intensity can be reduced by the amount of the steady stresses. Thus in the nature of the operation of pressure vessels, there is usually a history of operation at different amplitudes of alternating stress intensities, each operating for a given number of cycles. For instance, consider the following:

Stress Category	Primary			Secondary Membrane plus Bending	Peak
	General Membrane	Local Membrane	Bending		
Description (For examples, see Table 2.1) (4-120.1)	Average primary stress across solid section. Excludes discontinuities and concentrations. Produced only by mechanical loads.	Average stress across any solid section. Considers discontinuities but not concentrations. Produced only by mechanical loads.	Component of primary stress proportional to distance from centroid of solid section. Excludes discontinuities and concentrations. Produced only by mechanical loads.	Self-equilibrating stress necessary to satisfy continuity of structure. Occurs at structural discontinuities. Can be caused by mechanical load or by differential thermal expansion. Excludes local stress concentrations.	(1) Increment added to primary or secondary stress by a concentration (notch). (2) Certain thermal stresses which may cause fatigue but not distortion of vessel shape.
Symbol Note (4)	P_m	P_L	P_b	Q	F

Combination of stress components and allowable limits of stress intensities.

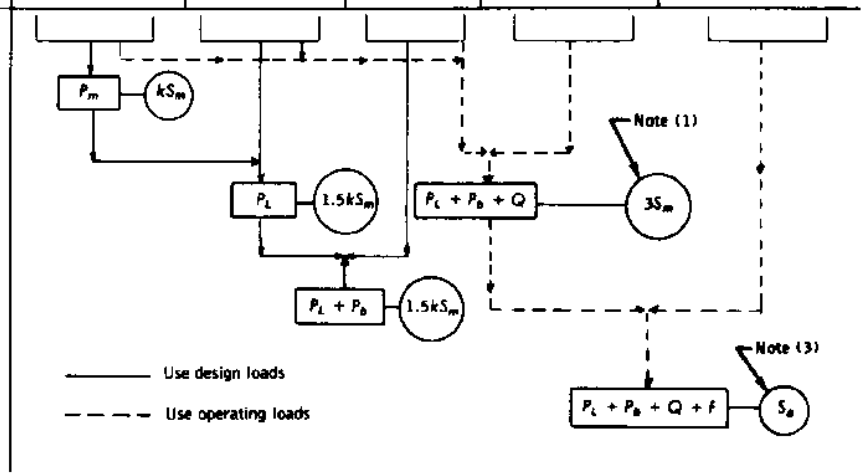

NOTES:

(1) This limitation applies to the range of stress intensity. When the secondary stress is due to a temperature excursion at the point at which the stresses are being analyzed, the value of S_m shall be taken as the average of the S_m values tabulated in Part AM for the highest and the lowest temperature of the metal during the transient. When part or all of the secondary stress is due to mechanical load, the value of S_m shall be taken as the S_m value for the highest temperature of the metal during the transient.

(2) The stresses in Category Q are those parts of the total stress which are produced by thermal gradients, structural discontinuities, etc., and do not include primary stresses which may also exist at the same point. It should be noted, however, that a detailed stress analysis frequently gives the combination of primary and secondary stresses directly and, when appropriate, this calculated value represents the total of P_m (or P_L) + P_b + Q and not Q alone. Similarly, if the stress in Category F is produced by a stress concentration, the quantity F is the additional stress produced by the notch, over and above the nominal stress. For example, if a plate has a nominal stress intensity, S, and has a notch with a stress concentration factor, K, then $P_m = S$, $P_b = 0$, $Q = 0$, $F = P_m (K-1)$ and the peak stress intensity equals $P_m + P_m (K-1) = KP_m$.

(3) S_a is obtained from the fatigue curves, Figs. 5-110.1, 5-110.2 and 5-110.3. The allowable stress intensity for the full range of fluctuation is $2 S_a$.

(4) The symbols P_m, P_L, P_b, Q, and F do not represent single quantities, but rather sets of six quantities representing the six stress components σ_t, σ_l, σ_r, τ_{tl}, τ_{lr}, and τ_{rt}.

(5) The k factors are given in Table AD-150.1.

FIGURE 2-7

Stress Categories and Limits of Stress Intensity

A hyperbaric vessel is designed to operate for 20 years. It is specified that during that period it will start up and shut down 3,000 times, and will reach the following number of steady-state pressures and resulting maximum stress intensities:

No. of Operations	Pressure, psi	$P_{[L]} + P_{[b]} + Q + F$, psi
1000	0 - 1000 - 0	0 - 60,000 - 0
1000	0 - 1000 - 0	0 - 52,000 - 0
500	0 - 700 - 0	0 - 42,000 - 0
500	0 - 500 - 0	0 - 30,000 - 0

(Note that the difference between the two 1000 items could reflect a difference due to a thermal stress quantity.)

For each of the operations shown above, the figures given in the column headed by $P_{[L]} + P_{[b]} + Q + F$, psi identify the "alternating stress intensity range." The amplitude of each alternating stress is half of this value, identified by the symbol $S_{[a]}$.

For most of the Code-authorized materials Design Fatigue Curves have been established.* Figure 5.110.1 of the Code is shown here as Figure 2-8. This curve and the others like it in this appendix are based upon experimental fatigue data generated over many years. The values of $S_{[a]}$, shown here represent amplitudes of alternating stress intensities. (Note again that this is half the value of the alternating stress intensity range.) These curves have been adjusted for mean stress values and only the alternating component of stress need be considered. For any given value of $S_{[a]}$, there is an acceptable number of cycles of operation and this number constitutes the design life of the vessel. For instance, referring to Figure 2-8, if a pressure vessel were to operate at a constant $S_{[a]}$ value of $P_{[L]} + P_{[b]} + Q + F = (74,000)/2 = 37,000$ psi, and the vessel were fabricated from carbon steel with an ultimate tensile strength of less than 80,000 psi, then the fatigue life of that vessel would be approximately 10,000 cycles; i.e., the load could vary from 0 - 1,000 psig-0, 10,000 times. The Code requires that all fatigue loadings applicable to the figures shown in Article 5-1, are to be interpreted from a linear cumulative damage criteria. That is, all cycles of stress must be accounted for in the total fatigue life of the vessel. In the example in the above paragraph, 10,000 cycles of operation is the entire design fatigue life of the structure. Now consider the loading conditions described above.

* These curves are based on tests which did not include the presence of a corrosive environment which might accelerate the fatigue failure.

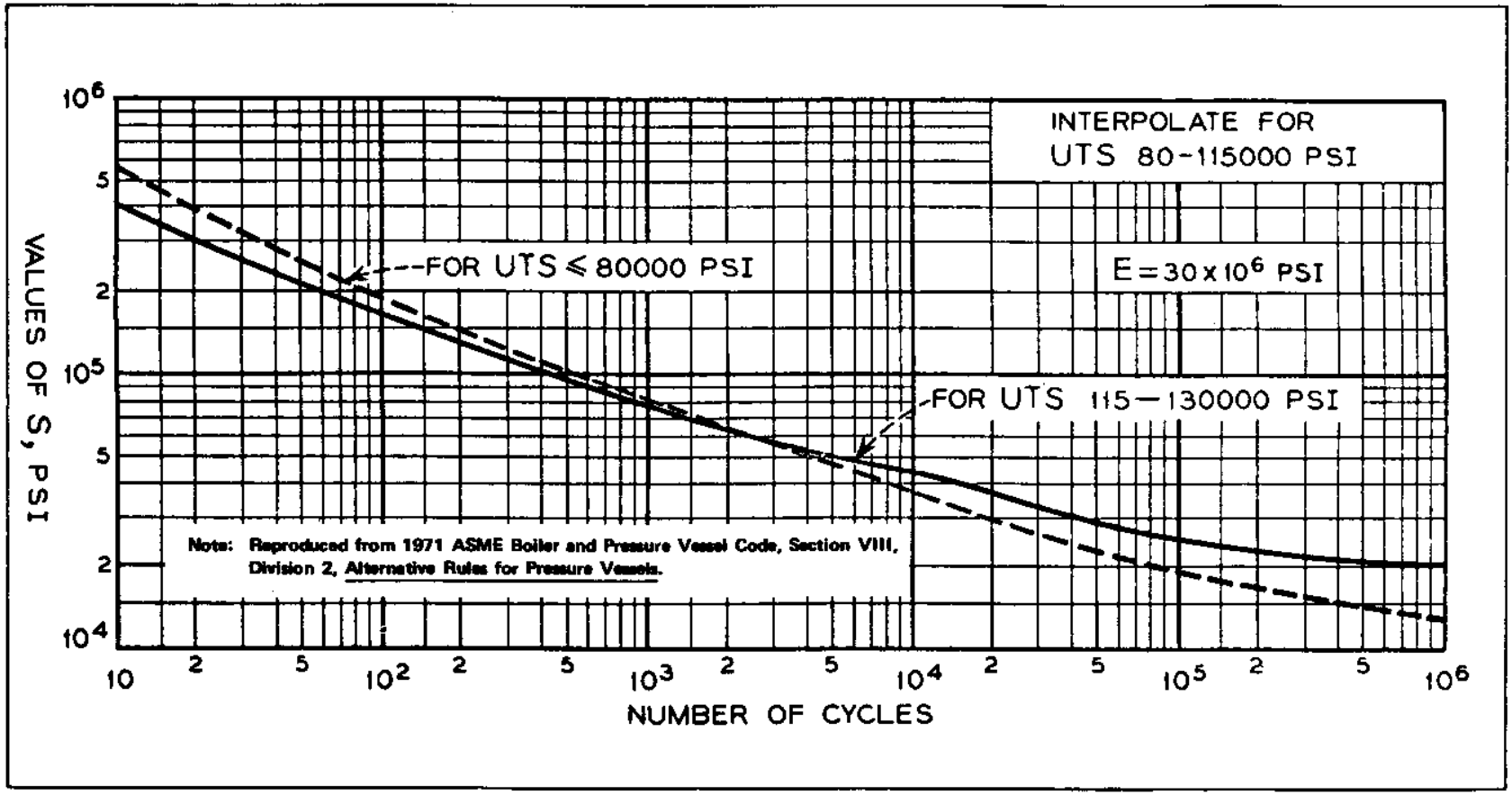

FIGURE 2-8
Fatigue Design Curve for Low Carbon and Alloy Steels

1000 cycles at $S_{[a]}$	30,000 psi
1000 cycles at $S_{[a]}$	26,000 psi
500 cycles at $S_{[a]}$	21,000 psi
500 cycles at $S_{[a]}$	15,000 psi.

Each of these cycles has used up a certain amount of the fatigue life of the vessel. In order to determine the adequacy of the vessel to carry out its mission over 20 years, the procedure is as follows: For each of the $S_{[a]}$'s shown, go to the appropriate fatigue design curve and find the number of cycles, $N_{[i]}$, permitted at this amplitude level. Designate the actual number of cycles of operation at this $S_{[i]}$ level as $N_{[i]}$. The cumulative usage factor, component $U_{[i]}$, is then simply $n_{[1]}/N_{[1]}$. The total usage factor U then equals the summation of all the $U_{[i]}$'s and this figure must be less than or equal to 1.0. In this case,

for $S_{[1]}$ = 30,000 psi, $N_{[1]}$ = 20,000 cycles, $n_{[1]}$ = 1000 cycles

for $S_{[2]}$ = 30,000 psi, $N_{[2]}$ = 20,000 cycles, $n_{[2]}$ = 1000 cycles

for $S_{[3]}$ = 30,000 psi, $N_{[3]}$ = 20,000 cycles, $n_{[3]}$ = 500 cycles

for $S_{[4]}$ = 30,000 psi, $N_{[4]}$ = 20,000 cycles, $n_{[4]}$ = 500 cycles

Thus

$$U_{[1]} = \frac{1000}{20,000} = 0.05$$

$$U_{[2]} = \frac{1000}{30,000} = 0.033$$

$$U_{[3]} = \frac{1000}{100,000} = 0.005$$

$$U_{[4]} = \frac{1000}{500,000} = 0.001$$

and $U = U_{[1]} + U_{[2]} + U_{[3]} + U_{[4]} = 0.089 \quad 1.0$

and the vessel is quite adequate.

In most cases, the designer may design right up to the Code allowable stresses. This is possible because in the generation of the Design Fatigue Curves, a safety factor of 2.0 on stress and/or 20.0 on cyclic life, whichever is greater, has been employed. The designer is urged to read Reference 1 (ASME Boiler and Pressure Vessel Code, 1980) for a fuller understanding of the origin and methods of employment of the concept of design by fatigue analysis.

NOTE: In reading Article 5-1, the designer should take particular note of Paragraphs 5-111, 5-112, and 5-140, which deal with the limitation on fatigue strength reduction factors and progressive distortion of

nonintegral connections. Incorporated in this Article and deeply imbedded in the philosophy of Section VIII, Division 2, is an emphasis on the creation of a pressure vessel as free as possible from sharp, local, geometric stress risers such as notches, fillet welds, and partial welds. This is seen continually throughout the design and fabrication sections of the Code. The avoidance of such discontinuities from pressure vessels to be employed in hyperbaric facilities takes on even more importance when corrosion effects are considered.

3. DESIGN REQUIREMENTS. Part AD, "Design Requirements" of Section VIII, Division 2, contains 10 articles, each of which deals with specific design requirements for a Code-approved vessel. These 10 articles are listed below and selected items are discussed.

a. Article D-1, "General."

(1) AD-115, "Corrosion." The designer is cautioned that he must make allowance for the loss of material due to corrosion effects, and that he must consider effects for the entire lifetime of the vessel. This loss must be compensated for by the addition of material to the wall thicknesses of the vessel above that needed to meet the stress intensity limitations as determined by analysis. Throughout the Articles dealing with design, it is emphasized that the analysis to be carried out should deal with the vessel geometry in the "as-corroded" condition.

(2) AD-140, "Design Criteria." Particular attention should be given to paragraph AD-140(c), where the definition of primary local membrane stress is given.

(3) AD-150, "Load Combinations." The designer should become familiar with Table AD-150.1, "Stress Intensity Limits for Various Load Combinations" Table 2-2 in this manual. The information contained in this table will be of use to the designer in the initial steps of his design procedure, and for setting test pressure limits.

(4) AD-155, "Minimum Permissible Temperatures for Ferrous Materials Other Than Austenitic." This paragraph, basically, sets the lower limit of test, design, or operating temperature for such materials. This limitation on temperature is solely based on toughness requirements. If the design of the vessel calls for operation at low temperatures, it is the absolute obligation of the designer to show that the material he chooses has the required toughness at the lowest temperatures to be seen by the chamber during its operational life.

(5) AD-160, "Fatigue Evaluation." This paragraph specifies the conditions under which a vessel may be exempted from the necessity of being evaluated for fatigue. Further, it makes a particular point of the deleterious effect that certain construction features may have upon the fatigue life of a vessel.

TABLE 2-2
STRESS INTENSITY k FACTORS FOR VARIOUS LOAD COMBINATIONS

Condition		Load Combination (See AD-110)	k Factors	Calculated Stress Limit Basis
Design	A	The design pressure, the dead load of the vessel, the contents of the vessel, the imposed load of the mechanical equipment, and external attachment loads	1.0	Based on the corroded thickness at design metal temperature
	B	Condition A plus wind load	1.2	Based on the corroded thickness at design metal temperature
	C	Condition A plus earth-quake load	1.2	Based on the corrode thickness at design metal temperature
	D	Condition A plus loads resulting from wave action (NOTE: The condition of structural instability or buckling must be considered)	1.2	Based on the corrode thickness at design metal temperature
Operation	A	The actual operating loading conditions. This is the basis of fatigue life evaluation	See AD-160 and Appen-dix 5	Based on corroded thickness at operating pres-sure and metal operating temp-erature
Test	A	The required test pressure, the dead load of the vessel, the contents of the vessel, the imposed load of the mechanical equipment, and external attach-ment loads	1.25 for hy-drostatic test and 1.15 for pneumatic test. See AD-151 for special limits.	Based on actual design values at test temperature

NOTE:
(1) When the rules of this Division are used in design of human occupancy pressure vessels and/or pressure vessels permanently installed in ocean-going ships, barges, and other floating craft [per AG-100(b)(2)], dynamic loads resulting from wave action included under Conditions D shall be the most probable largest loads encountered during the vessel's life and having a probability level per wave encounter not greater than 10^{-8}, which corresponds to one occurrence in 20 years.

(a) AD-160.1, "Operating Experience." The designer is cautioned that certain design features are inherently poor from the viewpoint of fatigue. Specifically mentioned are:

- Nonintegral construction, such as the use of pad type reinforcements or of fillet-welded attachments as opposed to integral construction
- Use of pipe threaded connections
- Stud bolt connections
- Major abrupt thickness changes between adjacent members.

These considerations take on added emphasis when considered from the viewpoint of corrosion. Each of the above geometries can present locations for the action of either crevice corrosion or corrosion due to the entrapment of corrosive agents. It is for these reasons that such construction practices are not recommended for use in pressure vessels in hyperbaric facilities.

(6) AD-160.2, "Rules to Determine Need for Fatigue Evaluation of Integral Parts of Vessels." The designer is cautioned that all parts of Condition A or all parts of Condition B must be met for a vessel constructed in such a manner to be exempt from a fatigue evaluation.

b. Article D-2, "Shells of Revolution Under Internal Pressure." This article is quite clear in its exposition and needs no further interpretation. The equations contained therein, together with Table AD-150.1 can assist the designer in the setting of the initial shell thicknesses for his preliminary design. Inherent in the term, "minimum thickness," used throughout this article should be the understanding, "in the as-corroded condition." Note carefully, that the formulae presented deal almost solely with internal pressure and that paragraphs AD-200.1 through AD-206 require that provision be made for other types of loading. These types may encompass local moment loads, thermal stress, and others. By and large the Code leaves the manner of determining the additional thickness required for such loadings to the designer.

c. Article D-3, "Shells of Revolution Under External Pressure." Generally, the normal loading for pressure vessels forming parts of hyperbaric facilities will be internal pressure. However, there may be instances particularly in the case of multi-chambered vessels, where a pressure differential may exist such that one vessel or part of one vessel could be subjected to an effective external pressure. In such an instance, the provisions of this article together with the data found in Appendix 2 of the Code should be applied.

d. Article D-4, "Welded Joints." This article classifies the types of welded joints which may be incorporated into a Code-approved vessel. The classifications are primarily intended to correlate with inspection procedures but also present good engineering practice. In this article, as in others, the designer is urged to keep his design "smooth"; that is, free from sharp local discontinuities and the use of fillet or partial penetration welds in the main pressure wall of the vessel. Particular attention should be directed to Paragraph AD-420 and Figure AD-420.2 which deal with material thickness transition zones.

e. Article D-5, "Openings and Their Reinforcement." This article presents information, which, if used fully and rigorously, will insure a satisfactory design of penetrations when the vessel is subject to a pressure load only. Adherence to the rules presented in this article apply to all "isolated" penetrations and do not apply, except in the most general sense, to openings or penetrations that are so closely spaced as to be considered "multiple" openings. "Multiple" openings are to be understood as two or more openings, which, when considered individually, cause stress fields which significantly over-lap the area or vicinity of the adjacent openings. Further, compliance with the specifications of this article, though required, does not satisfy the design requirements for a fatigue analysis of these components nor do these specifications deal with external piping loads. Both of these factors must be considered carefully by the design engineer.

The designer is urged to read and understand this article completely. Particular attention should be paid to paragraphs AD-520, -530, -540, and -550. These paragraphs deal with the establishment of required additional reinforcing materials and the geometric limits of their application. Paragraph AD- 560 deals with requirements for nozzles with separate reinforcing plates (pads, etc.). Though Code-allowable with severe limitations, the designer is urged to not use such configurations for pressure vessels for hyperbaric facilities.

f. Article D-6, "Nozzles and Other Connections." Here, as in article D-5, rules are presented that deal with acceptable nozzle configurations. The designer will note, as before, that heavy emphasis is placed on full penetration and butt weld joints. For most Code-approved vessels, partial penetration welds for nonload carrying pipe connections are allowed.

CAUTION: This practice is not recommended for pressure vessels for hyperbaric facilities. Paragraph AD-640, "Threaded Connections," gives design data concerning the use of threaded connections in the main pressure wall of the vessel. The designer is cautioned to consider the effects of corrosion, fatigue, and possible leakage when applying these specifications to hyperbaric vessels.

g. Article D-7, "Flat Heads, Bolted and Studded Connections." This article gives guidance in the select on of the initial design thicknesses for flat head sections and makes specific recommendations as to their connections to the main body of the vessel. It further makes recommendations and sets limitations for bolted flange connections. The provisions of paragraph AD-710 should be used in conjunction with the provisions of Appendix 3, "Rules for Bolted Connections," of the Code.

h. Article D-8, "Quick-Actuating Closures." This is a very short article mainly dealing with the prevention of unintentional opening or operation of the device. The data detailed in this article provides guidance in the design of devices described in pertinent paragraphs of Chapter 3 "Appurtenances" of this manual.

i. Article D-9, "Attachments and Supports." This article provides rules and recommendations as to the means of securing attachments and supports to the main vessel. As before, partial-penetration welds and fillet welds are permitted in certain applications. Again the designer is cautioned concerning the use of such weld configurations; particular note should be taken of paragraph AD-940, "Design of Supports."

j. Article D-10, "Access and Inspection Openings." Paragraph AD-1000, General Requirements," states that

> "All pressure vessels for use with compressed air, and those subject to internal corrosion or having parts subject to erosion or mechanical abrasion . . . shall be provided with suitable manhole, handhole, or other inspection openings for examination and cleaning."

The content of this paragraph certainly applies to hyperbaric vessels. In most cases, however, the need for such manways, etc., will be obviated by the presence of the doors or hatches incorporated into such vessels. Where there are specific areas in portions of multi-chambered vessels where interior inspection may pose a problem, the designer is required to supply such inspection ports.

4. APPENDIX 3, "RULES FOR BOLTED FLANGE CONNECTIONS." The first three articles in this appendix present rules and methods of designing bolted flange connections of specific types and geometries. The methods, both of design and analysis, are described in some detail and for the flanges described the designer may follow these articles as presented. He should bear in mind however, that, (1) some of the gasket materials and geometries may not be compatible with the liquid or gaseous media to be employed in the vessel, and (2) he must still justify his design from the viewpoint of fatigue.

5. APPENDIX 6, "EXPERIMENTAL STRESS ANALYSIS." It is within the intent and specifications of Section VIII, Division 2 that the stress condition throughout the vessel, while under load, be known. Mathematical analysis can be carried only so far. It is true that great strides have been made in the development of mathematical stress analysis techniques in recent years and that this development of analytic procedures is progressing at an increasing rate. There remain, however, areas in a complicated pressure vessel for which no mathematical stress analysis technique is available. For such areas, the designer may choose to prove his design upon either a model or, if he has sufficient confidence in his past experience, on the finished pressure vessel itself. Appendix 6 discusses briefly two basic methods of experimental stress analysis, (1) use of strain gages, and (2) use of photoelastic techniques. There are of course many other experimental techniques that may be employed. References 16 through 23 deal with the broad field of experimental stress analysis, and the designer may find the method he chooses to employ described in them. One method of experimental analysis, combining two techniques, is described briefly below. This method, when used properly, develops accurate data in an economical manner.

a. The area to be analyzed is coated with a brittle lacquer coating (see Reference 21, Holister, Experimental Stress Analysis, Principles and Methods).

b. The pressure in the vessel is raised very slowly in small increments until a crack pattern just starts to develop in the coating. (The crack will form perpendicular to the direction of the principal tensile stress at that point.) The pressurization is halted and the crack is marked, lengthwise along the crack, with grease pencil and numbered No. 1.

c. The pressurization procedure is continued until a definitive crack pattern is established.

d. The crack pattern will give a comprehensive picture of the directions of the principal stresses in the area. Further, by the observation and sequential numbering procedure described above, coupled with the relative density of cracks in the area, the location of the maximum stress can be determined.

e. At the point of maximum stress, and at other points of interest, scratch marks are made in the form of a cross (along the crack and perpendicular to the crack), thus indicating where gages are to be located.

f. The pressure in the vessel is lowered to zero and the coating is removed, leaving the scratch pattern.

g. Bi-axial, electrical resistance, strain gages are then mounted at and in line with the cross scratches.

h. The pressure in the vessel is increased incrementally while the strains in the gages are read by a suitable instrument, such as a strain indicator.

CAUTION: The experimenter is cautioned that brittle lacquers are extremely sensitive to temperature and humidity effects. Further, great care and patience must be exercised in observing and marking the crack pattern as it develops. If this is not done it is possible that the maximum stress point may be missed. Finally, he is cautioned not to read the crack pattern in a quantitative sense in an attempt to determine the stresses directly without the use of the strain gages. Such a procedure is theoretically possible but is definitely not recommended.

Whatever method of experimental analysis is employed, the designer/experimenter is urged to maintain clear and definitive records for incorporation in the Design Report.

NOTE: The designer should note that Paragraph 6-102, "When Reevaluation is Not Required," clearly states that if detailed experimental data exist for the exact or a very similar configuration, then a new experimental evaluation need not be carried out. The burden of proof for the justification of the use of such data, again, lies completely with the designer.

6. EXAMPLE OF DESIGN BY ANALYSIS AS APPLIED TO A SPHERICAL CHAMBER. The following example, showing the steps taken and the application of Code requirements for the design and analysis of a simple chamber may be of some help to a designer of such vessels in fully understanding the concept of design by analysis (See Figure 2-9).

a. Specification Data. Assume that the following data has been extracted from a User's Design Specification for a certain hyperbaric facility pressure vessel.

(1) The vessel shall be designed for human occupancy.

(2) It shall be basically spherical in shape with an inside radius of 90.00 inches.

(3) It shall be equipped with a nominal 4.0 inch diameter input pipe.

(4) It shall be equipped with a nominal 4.0 inch diameter output pipe.

(5) It shall be a combination (wet or dry) chamber.

(6) It shall have three view-ports.

(7) It shall have a 40.0 inch minimum inner diameter entrance way.

(8) The vessel shall be designed to meet the following operating conditions.

(a) Seawater shall be the primary pressurizing media.

(b) 1000 psig is the maximum design pressure.

(c) The pressurizing media shall, at different times, range in temperature from 30 deg. F to 150 deg. F.

(d) The chamber must be capable of sustaining 10,000 cycles of operation at 1000 psig and 150 deg. F.

(e) The operational life of the chamber is to be at least 20 years.

(f) The chamber shall be supported by a cylinder approximately 10 feet in diameter and 5 feet tall.

(g) Neither wind loadings nor earthquake loadings need be considered.

(h) The piping will be so designed that no moment loadings shall occur on the spherical shell.

(i) Figure 2-9 shows a sketch of the centerline and mean dimensions of the proposed chamber.

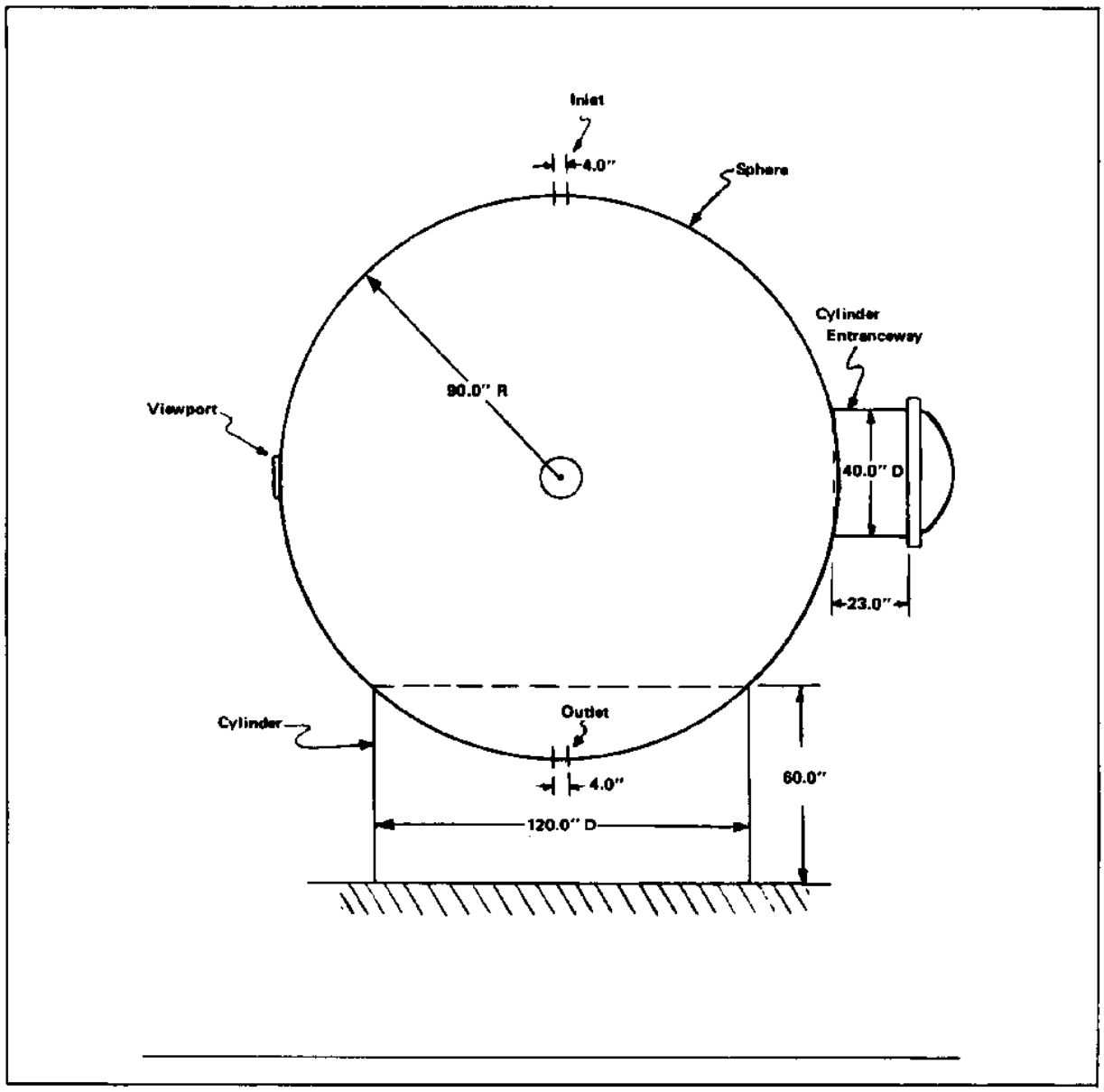

FIGURE 2-9
Schematic of Proposed Class 1 Vessel

b. Materials and Initial Calculations. Carbon steel, ASTM Specification A-516 grade 70, a Category 1 plate material, is chosen as the material from which to fabricate both the chamber and the support cylinder. From Table ACS-1 of Section VIII, Division 2*, the design stress intensity value, S_m, is shown as 23,300 psi at 100 deg. F and 23,100 psi at 200 deg. F. Linearly interpolating sets S_m at 150 deg. F at 23,200 psi. Based on this, the Stress Intensity Limits for the vessel become (see para. 2.e of this Section):

$$P_m < / = 23{,}200 \text{ psi}$$

$$P_L < / = 34{,}800 \text{ psi}$$

$$P_m \text{ (or } P_L) + P_b < / = 34{,}800$$

$$P_L + P_b + Q < / = 69{,}600 \text{ psi}$$

(1) Stress Intensity Range. From Figure 5-110 1, for a life of 10,000 cycles, a permissible S_a = 37,000 psi. Thus, since the pressure loading is from 0 to 1000 psig, the full allowable stress intensity range is $2S_a$ = 74,000 psi.

(2) Membrane Stress Intensity Limit. From Table AD-150-1, the factor to apply to the Membrane Stress Intensity is 1.0.

(3) Minimum Shell Thickness. From paragraph AD-202 of Article D-2, the minimum shell thickness of the sphere is calculated from:

$$t_{sp} = \frac{0.5\ PR}{S - 0.25P} \text{ (for internal pressure loading only)}$$

where t_{sp} = minimum required thickness of sphere, inches

P = design pressure, psi

R = inside radius of shell, inches

S = factor from Table AD-150-1 times S_m, in this case 1.0 S_m, psi

$$t_{sp} = \frac{0.5\ PR(1000.0)(90.0)}{23{,}200 - 0.25(1000.0)}$$

t_{sp} = 1.98 inches, use 2.0 inches.

(4) Total Dead Weight. The weight of the seawater in the full chamber would be approximately:

---

* Note: Henceforth all references to Tables and Figures made in this analysis shall be assumed to be those found in Section VIII, Division 2, unless otherwise noted.

$$W_{water} = \frac{4}{3}[pi]R^3[UPSILON]$$

where W_{water} = weight of water, lbs

R = inside radius of sphere, feet

[UPSILON] = density of seawater, lbs/ft^3

thus $W_{water} = \frac{4}{3}[pi]\ (7.5)^3\ (64.0) = 113{,}100$ lbs.

The weight of the sphere (neglecting penetrations) is calculated by

$$W_{sp} = 4[pi](r)^2\ (t_{sp})\ ([UPSILON])$$

where

W_{sp} = weight of sphere, lbs

r = mean radius of sphere, inches

[UPSILON] = density of steel, lb/in.^{3}

Thus $W_{sp} = 4[pi](91.0)^2\ (2.0)(0.283) = 58{,}900$ lbs.

Assume that the penetration reinforcements and entranceway, etc., add another 10,000 lbs of dead weight load to the structure. Thus the total dead weight load to be sustained by the cylindrical support skirt is

$$W_{total} = 113{,}100 + 58{,}900 + 10{,}000 = 182{,}000 \text{ lbs.}$$

(5) Support Skirt Compressive Stress. The average compressive stress in the support skirt is given by

$$[sigma]_{comp} = \frac{W_{total}}{[pi]D_s t_s}$$

$[sigma]_{comp}$ = compressive stress, acting longitudinally in the support skirt, psi

D_s = mean diameter of skirt, inches

t_s = thickness of support skirt

solving for t_s $\quad t_s = \dfrac{W_{total}}{[pi]D_s[sigma]_{comp}}$

and arbitrarily* setting $[sigma]_{comp} = 2{,}000$ psi

$$t_s = \frac{182{,}000}{[pi](120.0)(2000.0)} = 0.241$$

set $t_s = 0.25$ inches.

NOTE: At this point the designer should be guided by the restriction of Article D-9.

To ensure against elastic buckling an approximate formula from Roark (see Reference 24, Formulas for Stress and Strain, 1965) is employed

$$[\text{sigma}]_{[cr]} = 0.3\ E\ \frac{t_{[s]}}{r_{[s]}}$$

where $[\text{sigma}]_{[cr]}$ = critical compressive stress, psi

E = modulus of elasticity, psi

$r_{[s]}$ = mean radius of cylinder, inches

$$[\text{sigma}]_{[cr]} = 0.3(29 \times 10^{[6]})\ (0.25)/60.125$$

$$[\text{sigma}]_{[cr]} = 36{,}175 \text{ psi} >> 2{,}000 \text{ psi}$$

Thus the support skirt will not buckle under the dead weight load.

(6) Penetrations & Openings, Reinforcement. Paragraph AD-510 of Article D-5 sets the diameter limits on penetrations and openings that require no reinforcement. This limit is

$$D_{max} = 0.2\sqrt{R_m t}$$

where R_m = mean radius of the vessel at the location of the opening, inches.

t = nominal thickness of the head, as calculated from the formula in Article D-2, inches.

For the sphere $R = 91.0$ and $t = 2.0$ inches, thus

$$D_{max} = 0.2\sqrt{(91.0)(2)} = 2.69 \text{ inches.}$$

This means that penetrations for the 4.0 inch inlet and outlet pipes as well as the penetration for the 40.0 inch entranceway will require additional material to act as reinforcement. Penetrations with a diameter equal to or less than 2.69 inches require no reinforcement so long as the conditions stipulated in AD-510(b) and (c) are also met. These conditions deal with spacing limitations between adjacent unreinforced openings or proximity of unreinforced openings to the edge of outer holes and/or local stress areas. It must be emphasized that this limitation is based solely on pressure loading. In the words of paragraph AD-500

> "... These rules do not include design requirements for piping loads that may be imposed on the nozzle and/or shell portion and that may be added to the pressure loadings. Such additional loadings should be carefully considered by the designer."

Paragraph AD-520 "Required Reinforcement for Openings in Shells and Formed Heads." This delineates the area replacement concept inherent in the

reinforcement design procedure. This paragraph states:

"(a) Design for Internal Pressure. The total cross-sectional area of reinforcement, A, required in any given plane for a vessel under internal pressure shall be not less than

$$A = dt_{[r]}F$$

where

d = the diameter in the given plane of the finished opening in its corroded condition, inches.

$t_{[r]}$ = the thickness in inches which meet the requirements of Article D-2 in the absence of the opening.

F = 1.00 when the plane under consideration is in the spherical portion of a head or when the given plane contains the longitudinal axis of a cylindrical shell. For all other planes through a shell, use the value of F determined from Figure AD-520.1 except that, for reinforcing pads, F = 1.

(c) Not less than half of the required material shall be on each side of the centerline of the opening. (See also AD-540.1 (c).)"

Paragraph AD-540.1 "Boundary Along Vessel Wall" states reinforcement limits:

"(b) Two thirds of the required reinforcement shall be within a distance on each side of the axis of the opening equal to the greater of the following:

(1) $r + 0.5[SQRTr_{[m]}t]$ where $R_{[m]}$ is the mean radius of shell or head, t is the nominal vessel wall thickness, and r is the radius of the finished opening in the corroded condition.

(2) the radius of the finished opening in the corroded condition plus the thickness of the vessel wall plus the thickness of the nozzle wall."

Inherent in the above statements is that for pressure loading only, any thickness of shell beyond that calculated may be considered as reinforcement material within the stipulated boundaries.

(7) Inlet and Outlet Nozzles. It shall be assumed that the pipes leading to the proposed inlet and outlet nozzles have a 4.0 inch inner diameter and a 0.10 inch thick wall. Because the wall thickness of the sphere was set at 2.0 inches, the minimum required for the pressure loading, all reinforcement material for the penetration must be emplaced in the nozzle

itself. It is decided to choose a nozzle configuration as shown in Figure AD-540,1(b), shown here in Figure 2-10. This choice was made for two reasons: first, such a configuration will not be difficult to fabricate; second, it is a type of nozzle which can be analyzed for fatigue conditions due to pressure loadings by the "Stress Index Method" described in Article 4-6. To design such a nozzle, the following procedure should be followed:

- The area on either side of the nozzle centerline (AD-530) that must be replaced is

  $A = 0.5\ dt_{[r]} = 0.5(4.0)(2.0) = 4.0$ in.$^{[2]}$

where

A = Cross-sectional area of reinforcement
d = Diameter of finished opening in corroded condition, in.
$t_{[r]}$ = Minimum thickness which meets requirements AD-702 in the absence of the opening

- Referring to Figure 2-10 here, set $t_{[n]}$ = 2.5* + inches. The length along the shell which can be considered for reinforcement is marked as the "offset" on the figure or in this case 2.4 inches.

- To determine the height of the nozzle to beginning of the transition zone, the limit of reinforcement normal to the vessel wall must first be established. Paragraph AD-540.2 "Boundary Normal to Vessel Wall" states that:

  "The limit of reinforcement, measured normal to the vessel wall shall conform to the contour of the surface at a distance from each surface equal to the following limits:

  (a) For Figures AD-540.1(a), (b), and (d):

Limit $0.5\sqrt{r_m t_n + 0.5\ r_2}$

where

r = inside radius [of nozzle]
$= rm - 0.5\ t_n$

t_n = nominal nozzle thickness as indicated

r_m = mean radius $= r + 0.5\ t_n$

r_2 = transition radius between nozzle and wall

t_p = nominal thickness of connecting pipe

For this nozzle

$r = 2.0$ inches

$t_n = 2.5$ inches

$r_m = 2.0 + 0.5(2.5) = 3.25$

$r_2 = 1.0$ (see Article 4-6, para. 4-613(e)).

Thus Limit $= 0.5\sqrt{(3.25)(2.5)} + 0.5(1.0)$

Limit = 1.925 inches."

* This is a trial and error method.

+ Note: This $t_{[n]}$ is not the same as defined in Paragraph AD-540.1(c) quoted previously.

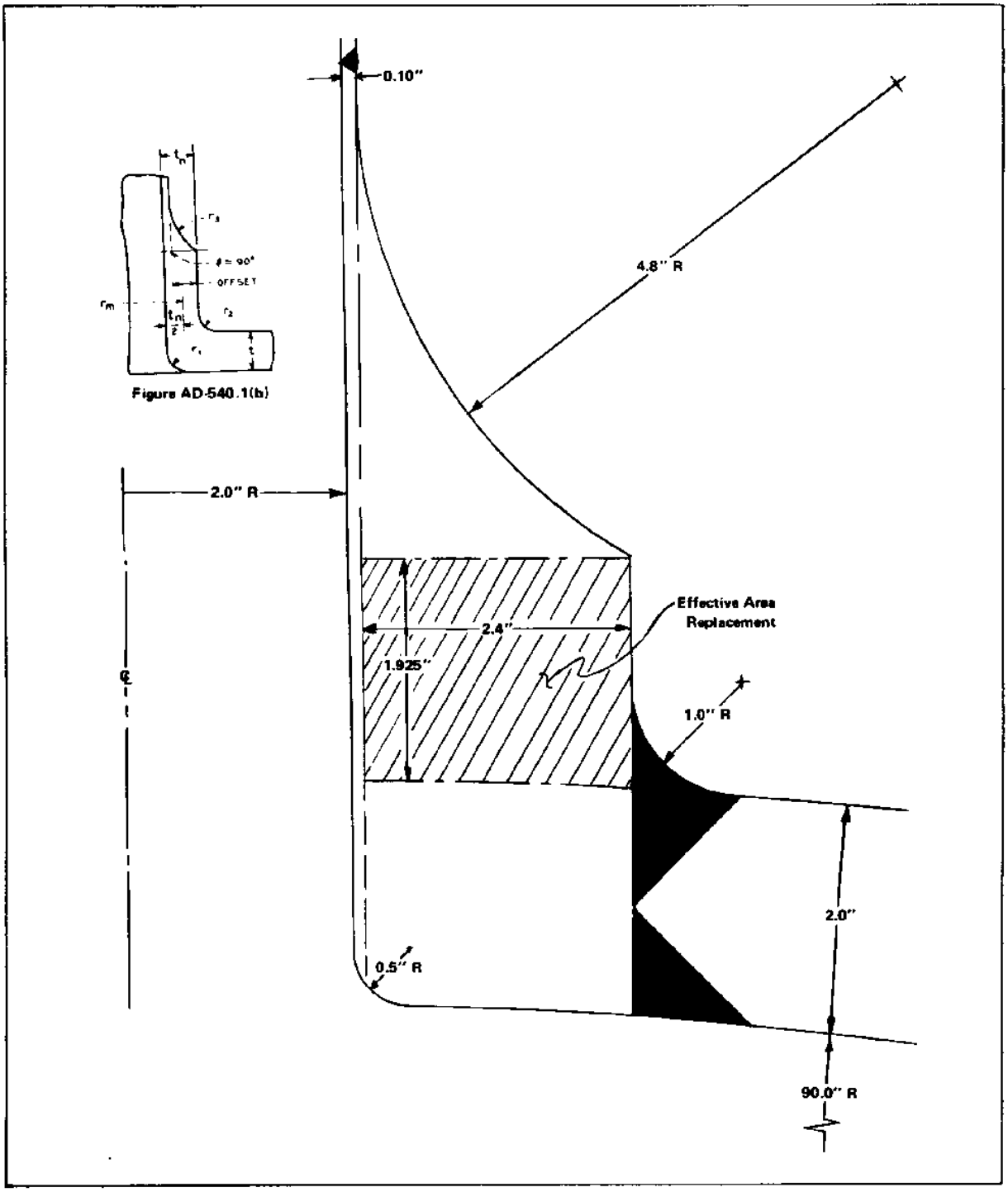

FIGURE 2-10
Details of Reinforcement for 4.0-Inch Nozzle

o Thus the effective area of material reinforcement is

$$A_{r} = 2.4 \times 1.925 = 4.62 \text{ in}^2$$

which is more than adequate.

o The designer must also check to see that his design conforms to the boundary limits along the surface of the shell as prescribed by the provisions of Paragraph AD-540.2(a), (b), and (c). Of particular importance is AD-540.1 (c) quoted in Paragraph 6.b.(6) above:
For this nozzle this limit is

For this nozzle this limit is

$$2.0 + 0.5\sqrt{(91.0)(2.0)}$$
$$2.0 + 6.73 = 8.73 \text{ inches.}$$

This limit, which is easily met in this case, can be also used by the designer in initially establishing the "offset" length as described above.

o The inner corner radius, r_{1}, is established by Paragraph 4-613(d) as between 10 percent and 100 percent of the shell thickness. In this case, r_{1} was set to 0.5 inches which is 25 percent of the shell thickness.
o The transition radius r_{3} is established by Paragraph 4-613(f)(2) as 2(sin [theta])^{3} times the offset. For this configuration nozzle, [theta] = 90.0 degrees and the offset is 2.4 inches. Thus r_{3} = 4.8 inches.
o The final 4.0 inch nozzle configuration is shown here in Figure 2-10. The choice of an

inserted nozzle configuration was based on a desire to minimize machine and welding costs, and meet the specifications of Paragraph AD-611 and Figure AD-610.1.

8) Viewport Mounting Ring. Assume that the viewport configuration to be employed is of the type portrayed in Figure 3-6 in Chapter 3, "Appurtenances." Such a configuration requires a penetration through the shell. Assume that this penetration must have a 10.0 inch diameter. It is decided to use a flat plate insert reinforcing ring as shown in Figure 2-11. The taper transition was established by the requirements of Paragraph AD-420 and Figure AD-420.2, which deal with the joining of two sections with significant differences in thickness. Basically, the length of the taper must be at least 3 times the rise, on each surface, from one shell part to its adjoining part. Such a reinforcement does meet the area replacement specifications.* It does not meet the specifications of Article 4-6 and thus must be evaluated for fatigue by some method other than the "Stress Index Method."

(9) Entranceway-shell Intersection. The minimum thickness of the cylindrical portion of the entranceway is established from Paragraph AD-201 by:

$$t_{min} = \frac{PR}{S - 0.5P}$$

where all terms are described in Paragraph 7.b.(3) preceding. Thus

$$t_{min} = \frac{(1000)(20.0)}{23{,}200 - 0.5(1000)} = 0.88 \text{ inches}$$

use t = 1.00 inch.

The designer is now confronted with the intersection of a minimum thickness main shell and a basically minimum thickness cylinder. Thus, reinforcing material must be added to compensate for the opening. The area of reinforcing material to be emplaced on a plane on each side of the opening is

$$A_r = 0.5(40.0)(2.0) = 4.0 \text{ in}^2$$

---

* NOTE: At this time Section VIII, Division 2, sets the limit on height of reinforcement only for those types of nozzles and other reinforcements detailed specifically in Figures AD-540.1 and AD-612.1. This is being changed. In the meantime, use Section VIII, Division 1, para. UG-40(c). (Basically, 2.5 times the nominal wall thickness of the vessel normal to each surface.)

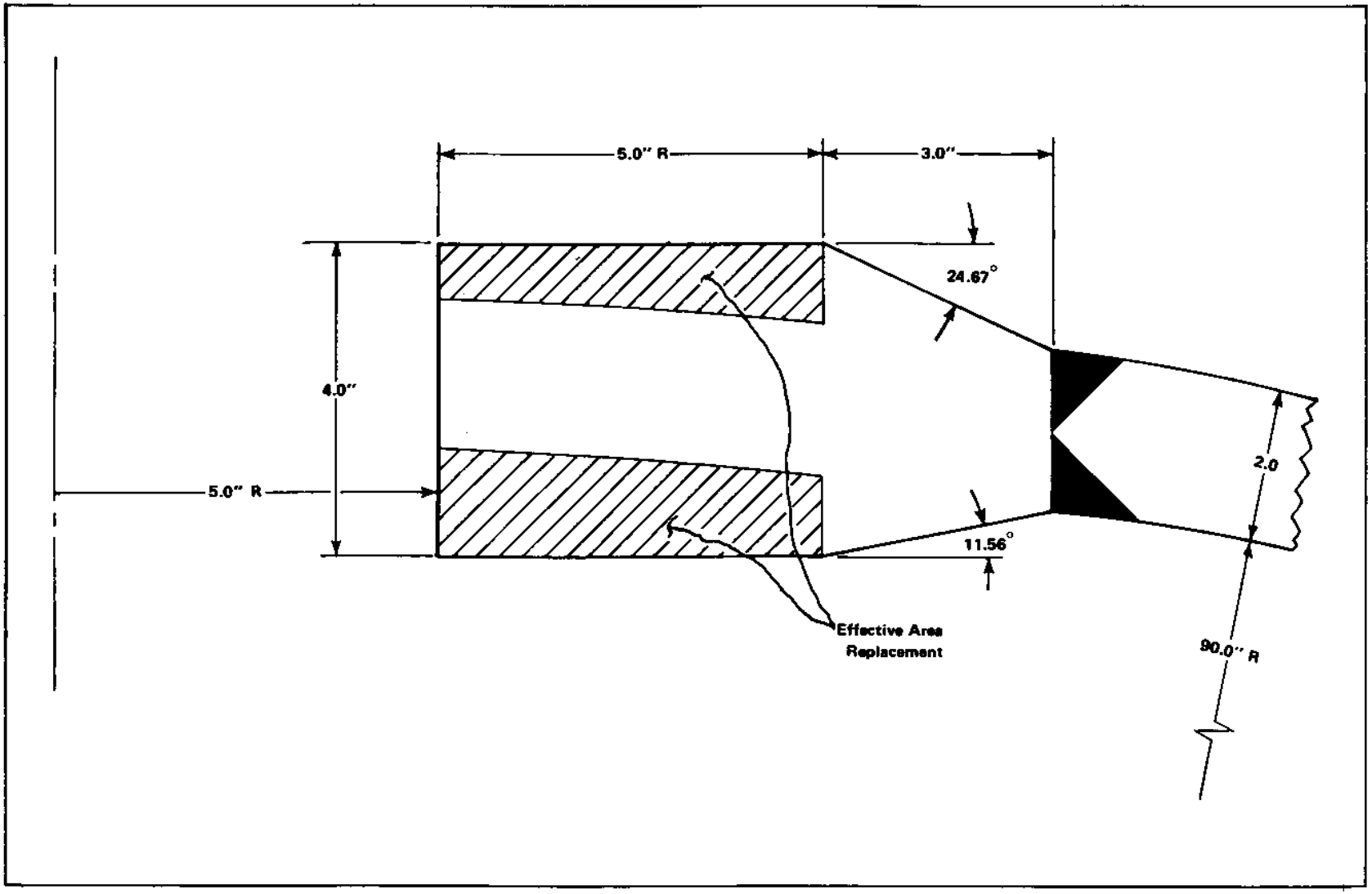

FIGURE 2-11
Details of Window Reinforcement

Further, two-thirds of this material must be emplaced at a distance from the centerline of the 40.0 inch opening equal to 26.73 inches. It was decided to use a balanced reinforcement (equal thickness of reinforcement on the top and bottom surface) as shown here in Figure 2-12. This is a forged section. The 1.0 inch wall 40.0 inch inner diameter cylinder is welded to the top of the forging with a full penetration weld. (See Article D-4 and Figure AD-610.1(a).) A 2.0 inch radius fillet weld is laid in and ground as shown. Again the taper transition is equal to 3 times the height of the rise to the top of the reinforcement surface. As in the case of the viewport reinforcing ring, this configuration must use some other method than the "Stress Index Method" for a fatigue evaluation.

(10) Door. The "door" falls into the classification of an appurtenance and its design should be governed by the criteria described in Chapter 3, "Appurtenances" of this manual. Its design will generally be quite complex and may require experimental evaluation to meet the requirements of Section VIII, Division 2. It must be so evaluated because it does form a part of the main pressure boundary of the vessel. However, as an example of how "design by analysis" may be applied in this case a torispheroidal or equivalent elliptical head and flange arrangement shall be designed. The flanges are to be secured by some clamping arrangement. Bolts could apply for a Class II vessel; some "C" type clamp arrangement could apply for a Class I vessel. This example shall not go into the method of hinging or clamping the "door."

- o Design of head - the head was chosen to be an ellipsoidal one where D/2h = 2. Here D is the inside diameter of the 40.0 inch cylinder and h is one-half the minor axis of the ellipse. Thus h = 10.0 inches. Further, this head has an L/D = 0.90 and a r/D = 0.17, where L is the inside radius of the spherical portion of the head and r is the inside radius of the toroidal section. Thus L = 3.60 inches and r = 6.8 inches.

- o To determine the minimum thickness of this head apply paragraph AD-204.3. This paragraph requires that t_{min} is the larger of

$$t = \frac{KPD}{2S}$$

or

$$t = \frac{PD}{2S - P}$$

where t = minimum thickness, inches
P = internal pressure plus a static head, psi
d = inner diameter of major axis, in this case

the inner diameter of the cylinder, inches
S = factor from Table AD-150.1 times S_m, in this case 1.0 S_m psi

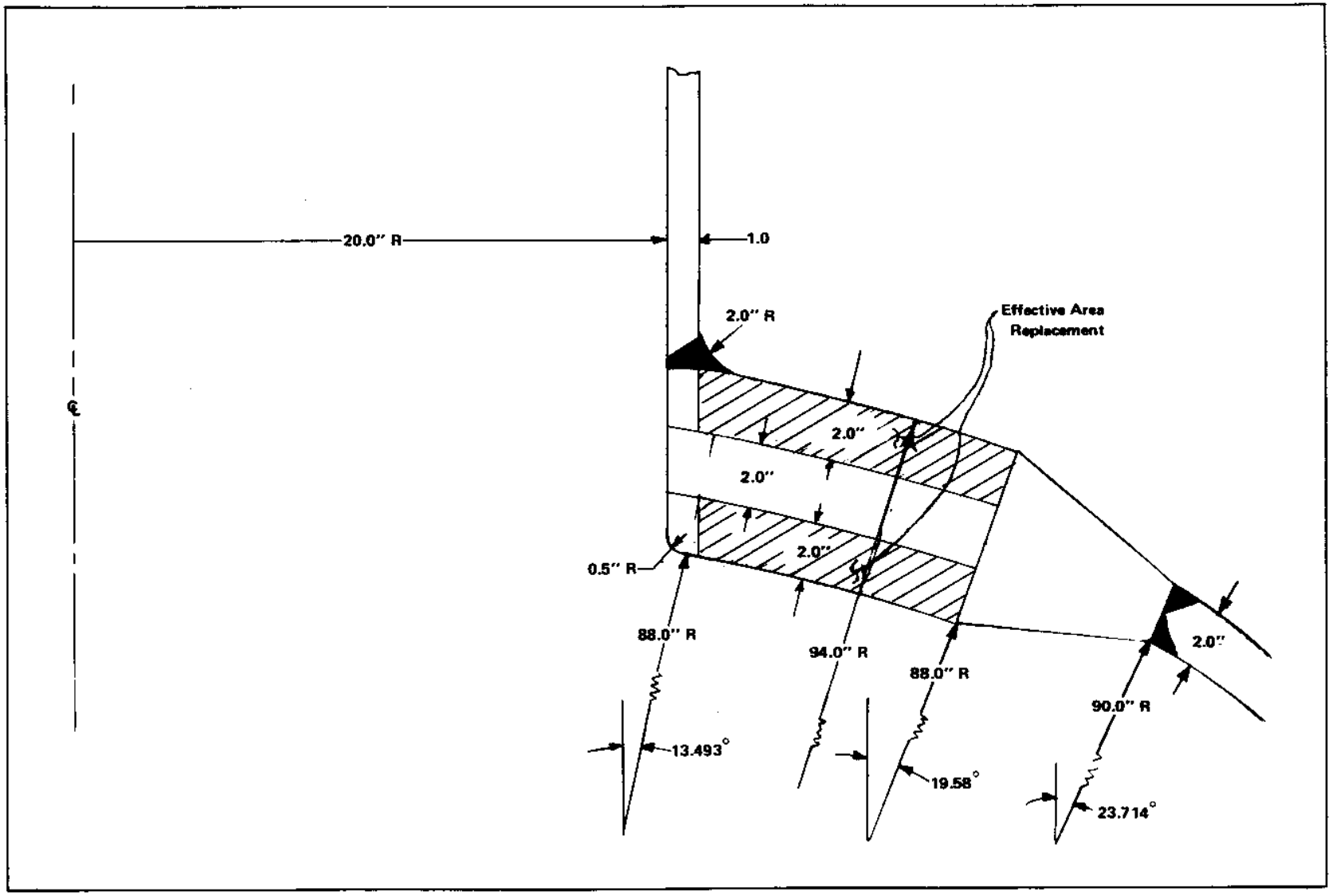

FIGURE 2-12
Details of Reinforcement for 40.0-Inch-Diameter Penetration

K = a factor depending on the ratio of P/S as determined from Figure AD-204.1 for heads with D/2h = 2.

Here P = 1000 psi and S = 23,000 psi, thus P/S = 0.043. Enter Figure AD-204.1 with this figure, K is established as approximately 1.05. Thus we have

$$t_{1} = \frac{1.05(1000.0)(40.0)}{2\ (23{,}200)} = 0.913 \text{ inches}$$

or

$$t_{2} = \frac{(1000.0)(40.0)}{2\ (23{,}200) - 1000} = 0.889 \text{ inches}$$

t_{1} governs, so we set $t_{head} = 1.0$ inch.

- This head or "door" is shown here in Figure 2-13.
- Design of the flange -- The flange could be designed using the provisions of Article 3-3 of Appendix 3. However it was decided to use a different type of flange than those covered by these provisions. (See Paragraph 3-300.) It was decided to use a flat-faced flange with sealing by some type of pressure energized ring-seal backed up by a compressed "O" ring seal. This seal arrangement is shown conceptually in Figure 2-13. No attempt will be made to dimensionally detail them, since they are basically part of the "door" system and that in itself is being only approximated in this design. The upper flange was developed as a 1.5 inch thick ring with an inner radius of 20.0 inches and an outer radius of 23.5 inches. It is attached to the head by a full penetration weld with an overlay fillet weld with a smooth, ground, 1.0 inch radius as shown in Figure 2-13. The bottom flange is basically the same but with a taper transition 4.0 inches long, at 10 degrees to the surface of the cylinder as shown. The bolt circle or clamp contact line is set at a radius of 22.5 inches. The design of this flange in this manner was really based on experience. The flat-face, metal to metal flange was chosen so as to allow a significant preload to the bolts or clamp and the flange. If a sufficient preload is established, then the bolts or clamp will not undergo any significant load cycles and can be exempted from fatigue considerations, which for bolts under Section VIII, Division 2, can be quite limiting. (See Paragraph 5-120, "Fatigue Analysis of Bolts," and also see Article 3-5.)

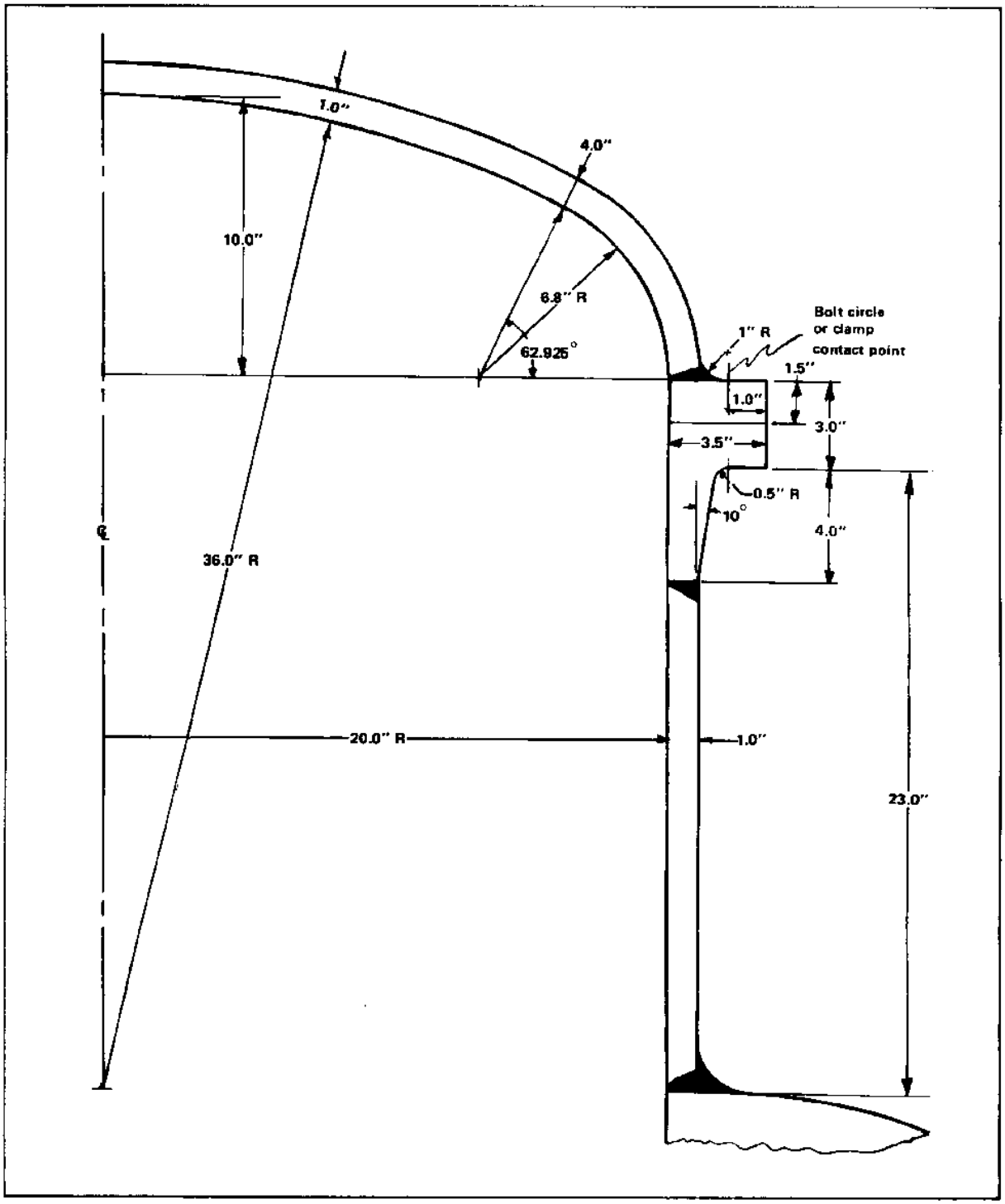

FIGURE 2-13
Details of Entranceway and Door

c. Stress Analysis. The above procedure, basically, forms the first phase of a design by analysis. A configuration has been established and dimensions specified. Notice that the vessel has been designed to be "smooth." That is, there are no gusset plates, fillet welds, added reinforcing plates, etc. An attempt has been made right from the start to eliminate any sharp notches or other severe highly localized stress areas. It is to be understood that all welding practice must follow that defined in Section VIII, Division 2 and also Section IX, "Welding Qualifications" of the ASME Code and NAVSHIPS 0900-000-1000. Further, to ensure a good design all welds must be ground smooth and in the case of butt welds, ground smooth and flush and all imperfections removed. The next step in the design by analysis procedure is to carry out a detailed stress analysis where necessary, and if so desired and possible, apply the few areas of the Code where a detailed analysis is not required. These areas are restricted to nozzle designs conforming to all of the following:

- Subject only to internal pressure loading
- Provisions of Paragraph AD-540.1, 540.2(a) and (b)
- Figure AD-540.1
- Provisions of Paragraph 4-600(a), 4-611, 4-612, 4-613, or if experimental data is available for similar but slightly different nozzle configurations the provisions of Paragraph 4-622 may be applied.

(1) Loading Conditions. The only loading conditions applied in this analysis were the maximum design pressure of 1000 psig and the dead weight load of the sphere full of seawater. This was done for simplicity. The designer is cautioned that in the case of an actual vessel, he must consider all loads specified in the User's Design Specification. These can include thermal loads, pipe loads and seismic loads among others.

(2) Requirement for a Fatigue Evaluation. Paragraph AD-160.2 requires that all parts of Condition A or all parts of Condition B must be satisfied for such a vessel to be exempt from a fatigue evaluation. The first part of Condition A is not met. This part requires that the expected (design) number of full range pressure cycles including start up and shut down plus other types of pressure and temperature gradient cycles must not exceed 1,000 cycles. The pressure design basis of this chamber is 10,000 cycles of pressure from 0 to 1,000 to 0 psig, thus violating this restriction. Part (a) of Condition B requires that the expected design number of full range pressure cycles, including start up and shut down, does not exceed the number of cycles in the applicable fatigue curve for the material in Appendix 5 corresponding to a $S_{[a]}$ value of 3 times the $S_{[m]}$ value for the material at the operating temperature. $S_{[m]}$ was previously established as 23,200 psi. 3 $S_{[m]}$ is 69,600 psi. Entering Figure 5-110.1, shown here as Figure 2-8 with a $S_{[a]}$ value of 69,600, it is found that the number of cycles of permissible operation is approximately 1,700 cycles. Thus Condition B is not met and the vessel must be evaluated for fatigue.

(3) Method of Analysis. All components of this vessel, and basically the vessel itself, comprise bodies of revolution. For this reason, it was decided to analyze the structure using a digital computer program which is capable of determining stresses and displacements in shells of revolution loaded by symmetric or nonsymmetric loads. The program used for this problem is based on the multi-segment, numerical integration method as applied to differential equations describing the general shell of revolution boundary value problem. These shell parts may have the following shapes: cylindrical, spheroidal, ellipsoidal, parabaloidal, conical, and toroidal. For non-symmetric loadings, the loads must be broken down into their Fourier components, each component requiring a computer run. There are many well proven computer programs which generate extremely good solutions as compared to exact or experimentally derived solutions, The designer must select the computer program applicable to his problem and his available equipment.

The vessel was mathematically described by three models. Model No. 1 shown here in Figure 2-14 includes both 4.0 inch diameter nozzles, the main spherical shell and the cylindrical support skirt. Model No. 2, shown here in Figure 2-15, includes the 40.0 inches diameter entranceway, the forged reinforcement ring, the tori-spheroidal "door" and part of the main shell. Model No. 3, shown here in Figure 2-16, includes the 10.0 inch diameter penetration reinforcement plate and part of the main shell. The validity of using these three models to accurately analyze the vessel rests upon the relatively large distances (as measured along the spherical surfaces) between any of the penetrations or attachments to the shell. For this spherical shell, the decay length is approximately 17.0 inches. Decay length is defined as that length along the shell in which a uniform moment applied to an edge reduces to approximately zero. All penetrations and attachments are spaced well beyond this distance.

(a) Model No. 1. This model, as shown in Figure 2-14 is composed of 12 parts. These parts and their thicknesses are as follows:

Part No.	Type of Shell	Thickness, inches
1	Cylinder	0.25
2	Cylinder	0.25
3	Sphere	2.0
4	Sphere	Variable (to model the 1.0 inch fillet radius on nozzle)
5	Torus	Variable (geometrically a rectangular ring)
6	Cylinder	Variable (to model the 4.8 inch radius transition zone)
7	Cylinder	0.1
8	Sphere	2.0
9	Sphere	(see 4 above)
10	Torus	(see 5 above)
11	Cylinder	(see 6 above)
12	Cylinder	0.1

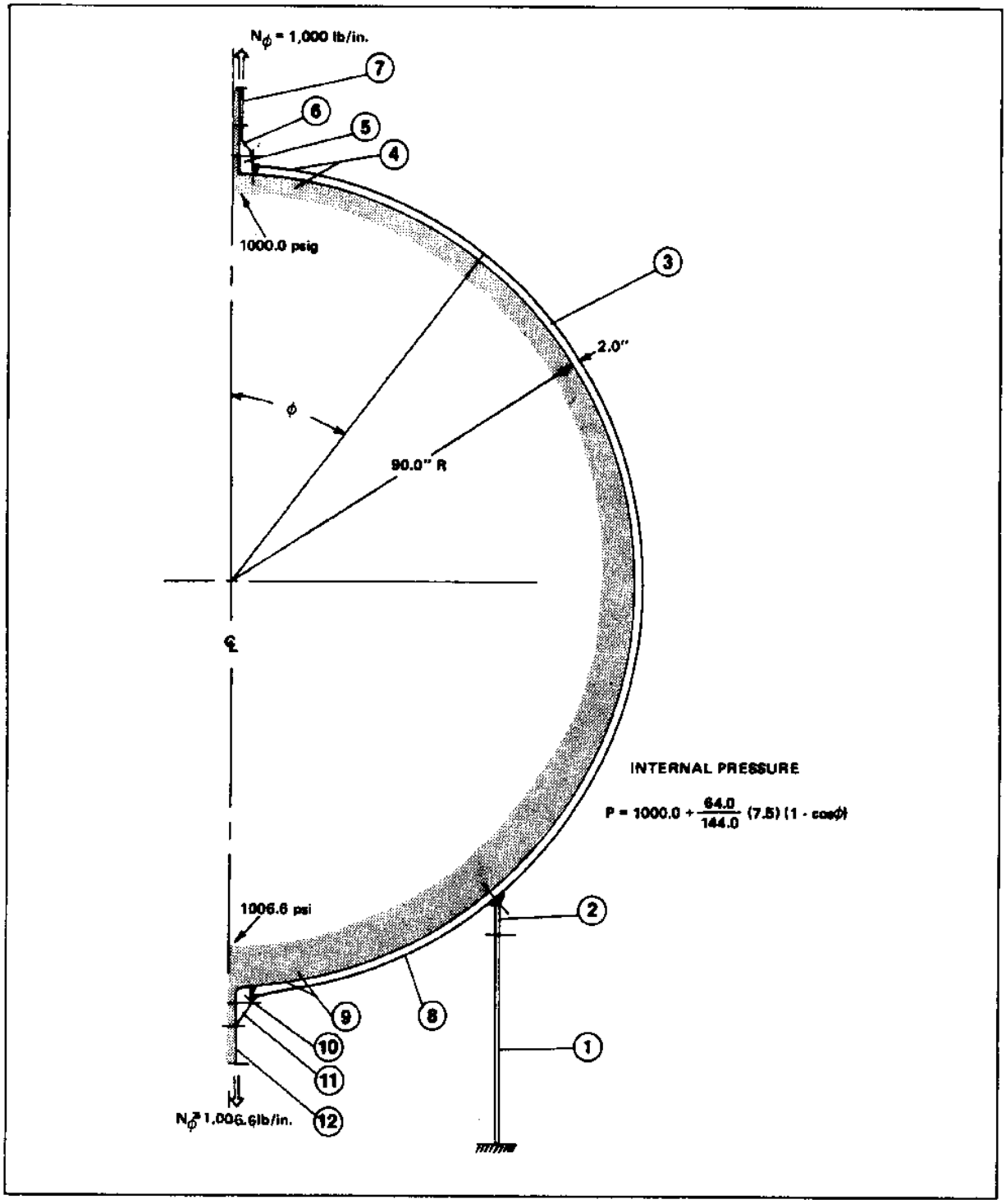

FIGURE 2-14
Model No. 1 for Input to Computer Program

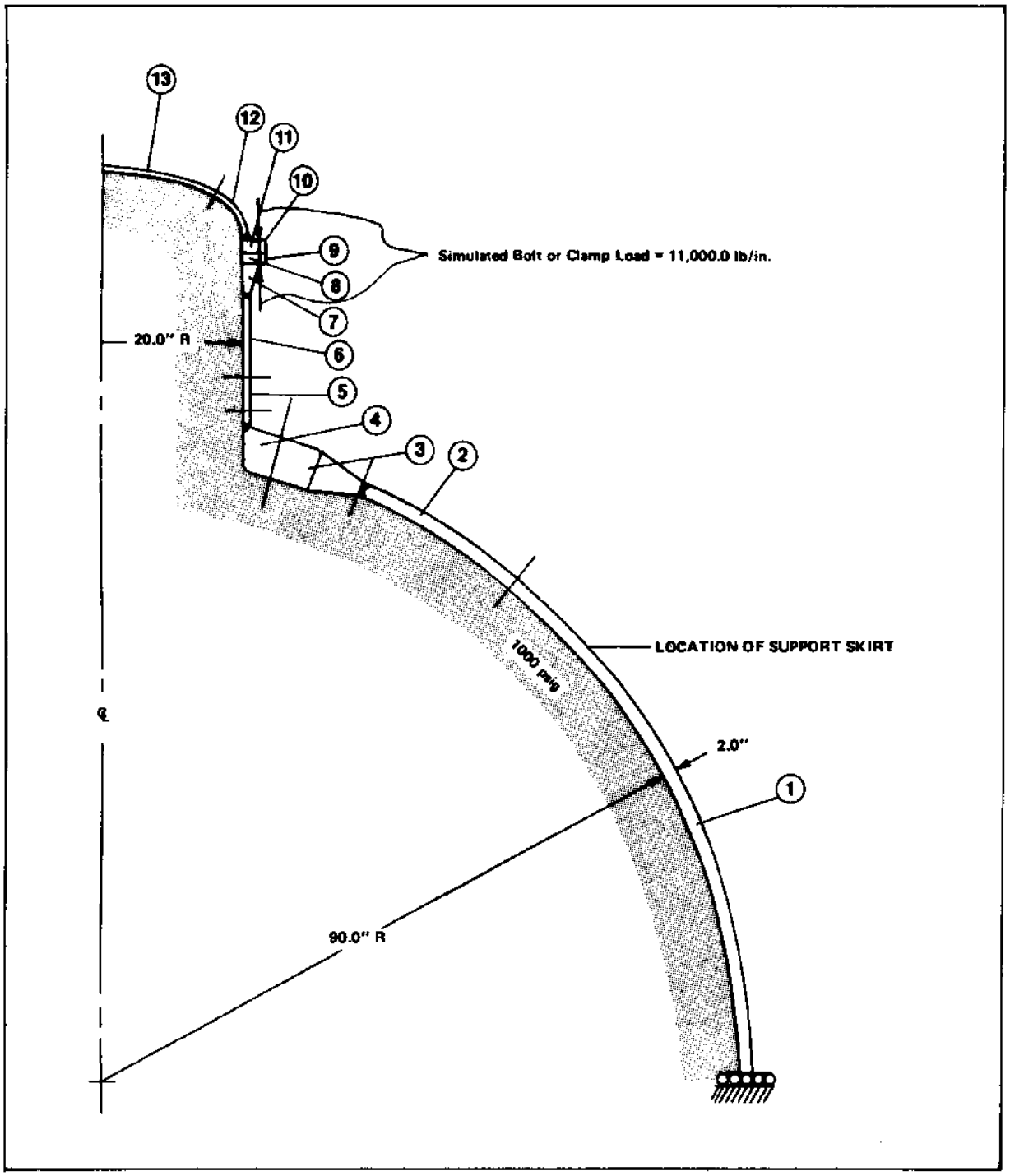

FIGURE 2-15
Model No. 2 for Input to Computer Program

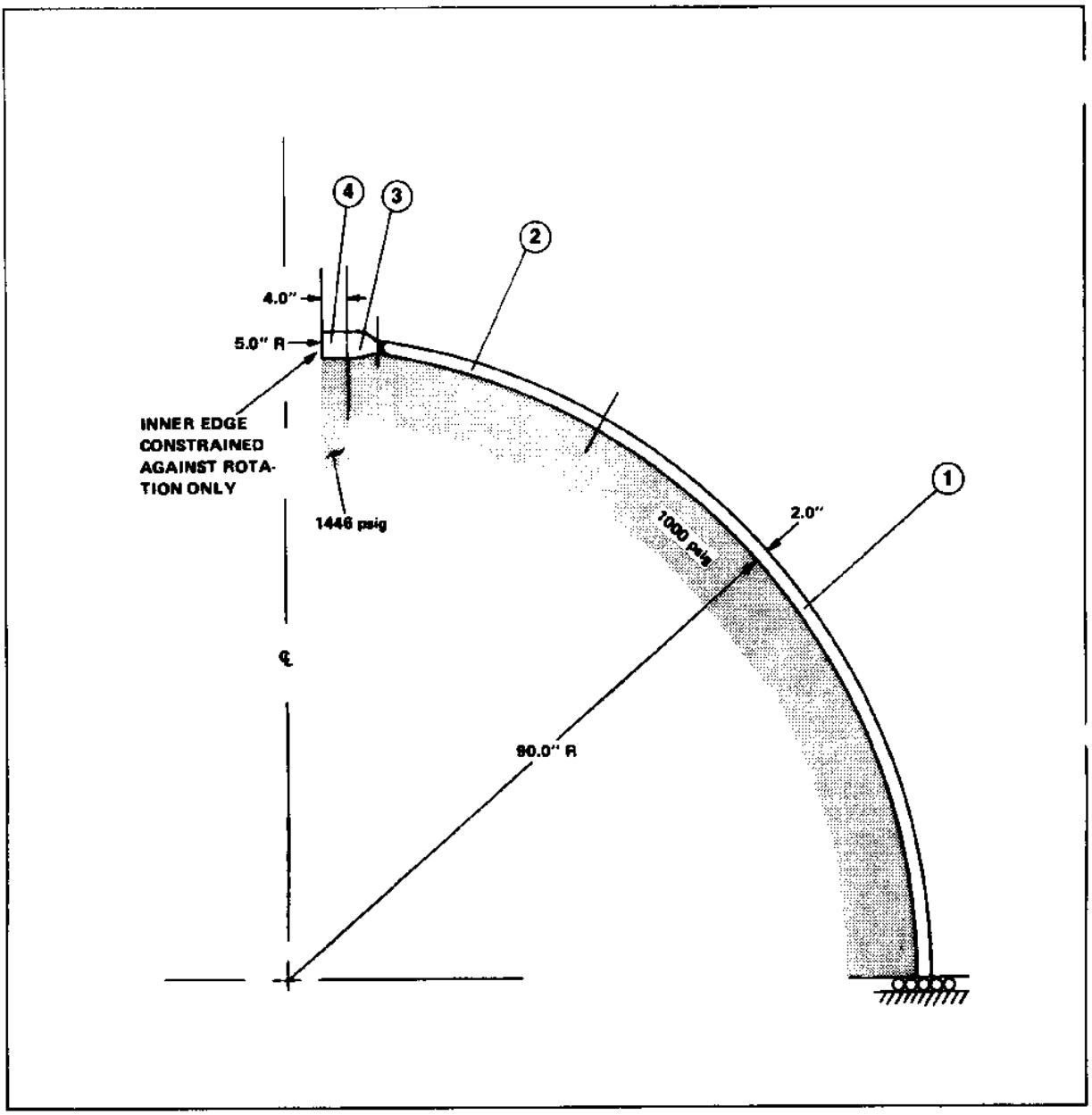

FIGURE 2-16
Model No. 3 for Input to Computer Program

Figure 2-17 shows a detail of the geometric model of the 4.0 inch nozzle section. This illustration portrays exactly what the computer sees. As can be noted, by comparing this figure to Figure 2-10, the actual geometry of the structure was closely followed.

The loadings and boundary conditions applied to model No. 1 are shown in Figure 2-14. The cylinder representing the support skirt is fixed at its base. Parts 7 and 12 are loaded only by a meridional membrane force of 1,000 and 1006.6 lb/in. respectively representing the membrane forces in the pipes leading from the nozzles. These pipe sections were modeled sufficiently long such that no moment or shear loads are present at their ends. The pressure acting inside the sphere is uniformly variable and is equal to the 1000 psig applied pressure plus the pressure head of the water. The dead weight load of the shell was neglected for two reasons: (1) it is small compared to the other loads, and (2) it remains a constant factor and thus need not be considered from ,the viewpoint of fatigue. This latter point is valid as long as the prior point is valid. Remember, all the load induced stresses must meet certain static stress limitations prior to meeting the 2 $S_{\lceil a \rceil}$ fatigue stress limitation. Some of the maximum stresses and the location and direction in which they act are shown in Figures 2-17 and 2-18. Here [sigma] [PHI] is a meridional stress acting in the plane of the paper, along the surface of the shell. [sigma][theta] is a circumferential stress acting perpendicular to the plane of the paper along a circumferential line of the shell. Membrane stress, whether in the [PHI] or [sigma] direction, is an average stress assumed to act uniformly through the thickness of the shell. This is true of course for all the models.

(b) Model No. 2. This model, as shown in Figure 2-15, is composed of 13 parts as follows:

Part No.	Type of Shell	Thickness, inches
1	Sphere	2.0
2	Sphere	2.0
3	Sphere	Variable (to model the taper transition joint and part of the reinforcement)
4	Torus	Variable (geometrically, a spherical section and a cylindrical section)
5	Cylinder	1.0
6	Cylinder	1.0
7	Cylinder	Variable (to model the flange taper transition)
8	Torus	Variable (geometrically a flat rectangular ring modeling part of the flange)
9	Conical	1.5 (rest of flange)
10	Conical	1.5 (same as 9)
11	Torus	(Same as 8)
12	Torus	1.0
13	Torus	1.0

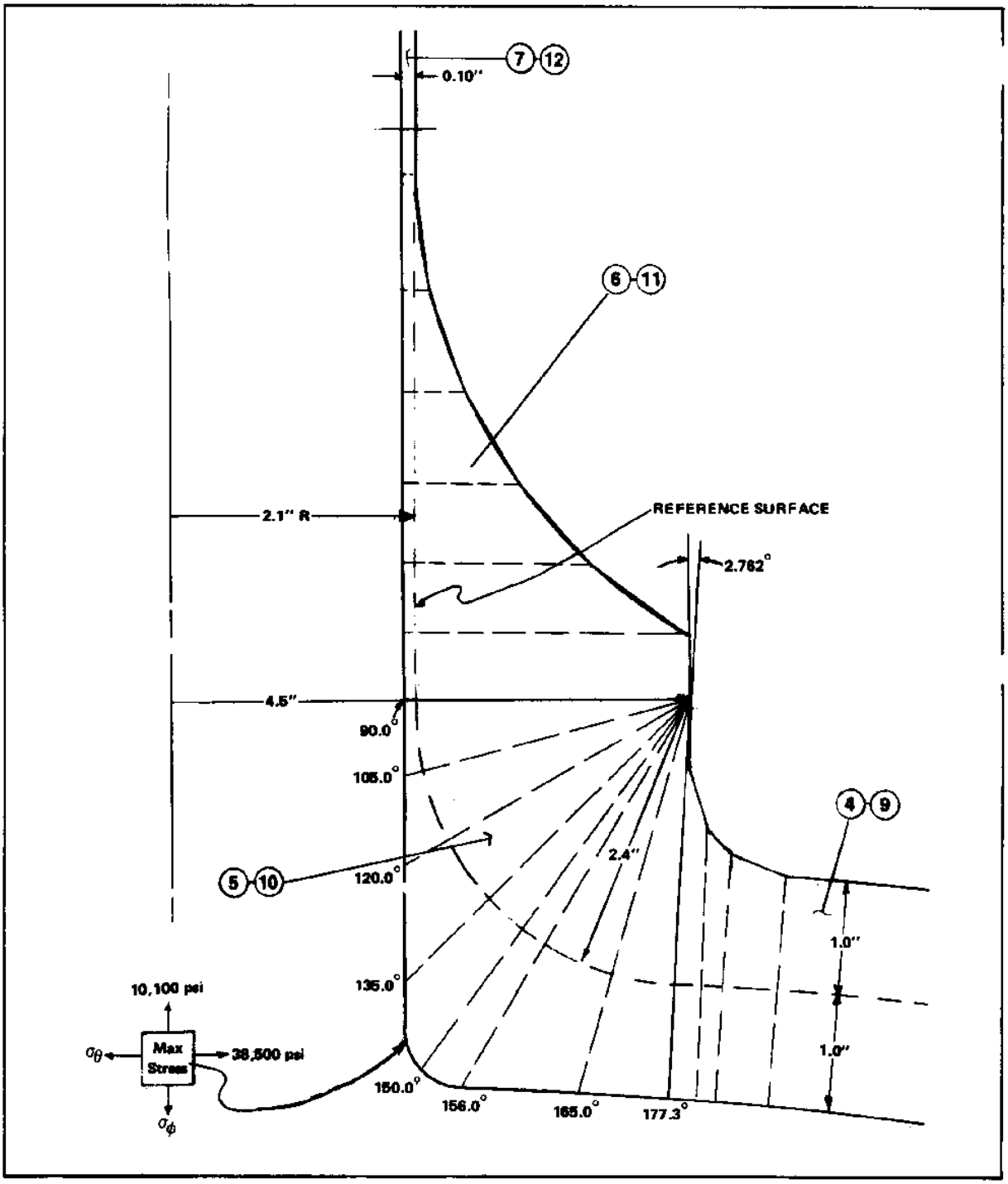

FIGURE 2-17
Details of 4.0-Inch Nozzle From Model No. 1

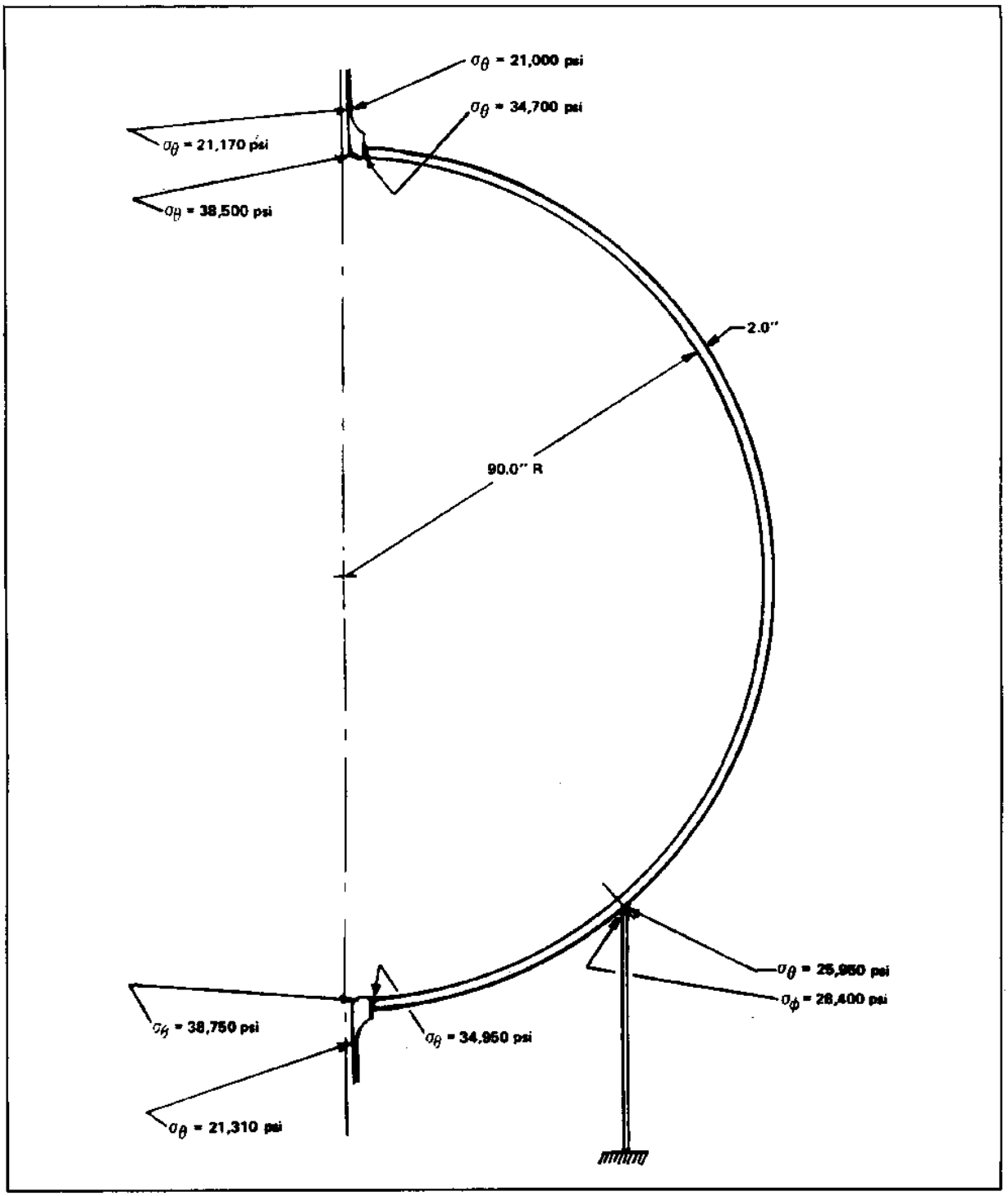

FIGURE 2-18
Some Maximum Stresses in Model No. 1

Figure 2-19 shows a detail of the geometric model of the 40.0 inch diameter reinforcement configuration which is composed of Parts 3, 4, and 5 from Model No, 2. Again notice the close geometric modeling.

The loadings and boundary conditions applied to Model No. 2 are shown in Figure 2-15. The two 11,000 lb/in. ring loads shown acting at the junction of Parts 8-9 and 10-11 represent the simulated bolt or clamp loads. The internal pressure was set at 1000.0 psig. The boundary condition at the edge of the shell represents the symmetry condition found along any diametral line in a uniform sphere under uniform internal pressure. Some of the maximum stresses and the location and direction in which they act are shown in Figures 2-19 and 2-20.

(c) Model No. 3. This model, as shown in figure 2-16, is composed of four parts as follows:

Part No.	Type of Shell	Thickness, inches
1	Sphere	2.0
2	Sphere	2.0
3	Conical	Variable (to model the taper transition and part of the reinforcement)
4	Conical	4.0

The loadings and boundary conditions applied to Model No. 3 are shown in Figure 2-16. The basic loading was 1000 psig internal pressure. The additional 446 psig pressure shown acting upon Part 4 represents the bearing pressure of the inserted window upon the reinforcement flange. This figure is attained by assuming the total bearing load caused by the 1000 psig acting on the area of the window is borne by a 4.0 inch ring surface of the reinforcement plate. The only restraint applied to the inner edge of the 10.0 inch diameter reinforcement ring was one fully constraining rotation. It was assumed that the inserted window configuration would be fairly thick and act as a rotation constraint. The shell edge was considered in Model No. 2. Some of the maximum stresses are shown in Figure 2-21. In addition the radial displacement of the inner edge of the reinforcement ring and the moment that will be applied to the flange of the inserted window is shown.

This 4.8 mil displacement and the 15,000 $\frac{\text{in-lb}}{\text{in.}}$ moment load should be used in the design of the window.

(4) Categorization of Stress. At this point in the "design by analysis" procedure, the stresses as calculated above should be broken down into the stress categories as earlier defined. All stresses developed in this analysis were principal stresses because the models were composed of shells of revolution. The computer program used breaks the stresses down into total stresses acting on the surfaces and the membrane stress in each direction all along the shell. The submission of the computer printout, in this case, with some particular points of interest further defined, should be sufficient documentation. The computer printout shall not be included in this chapter. However, as an example at the junction of Parts 4 and 5 in Model No. 2 (see Figure 2-15) the computer has printed out,

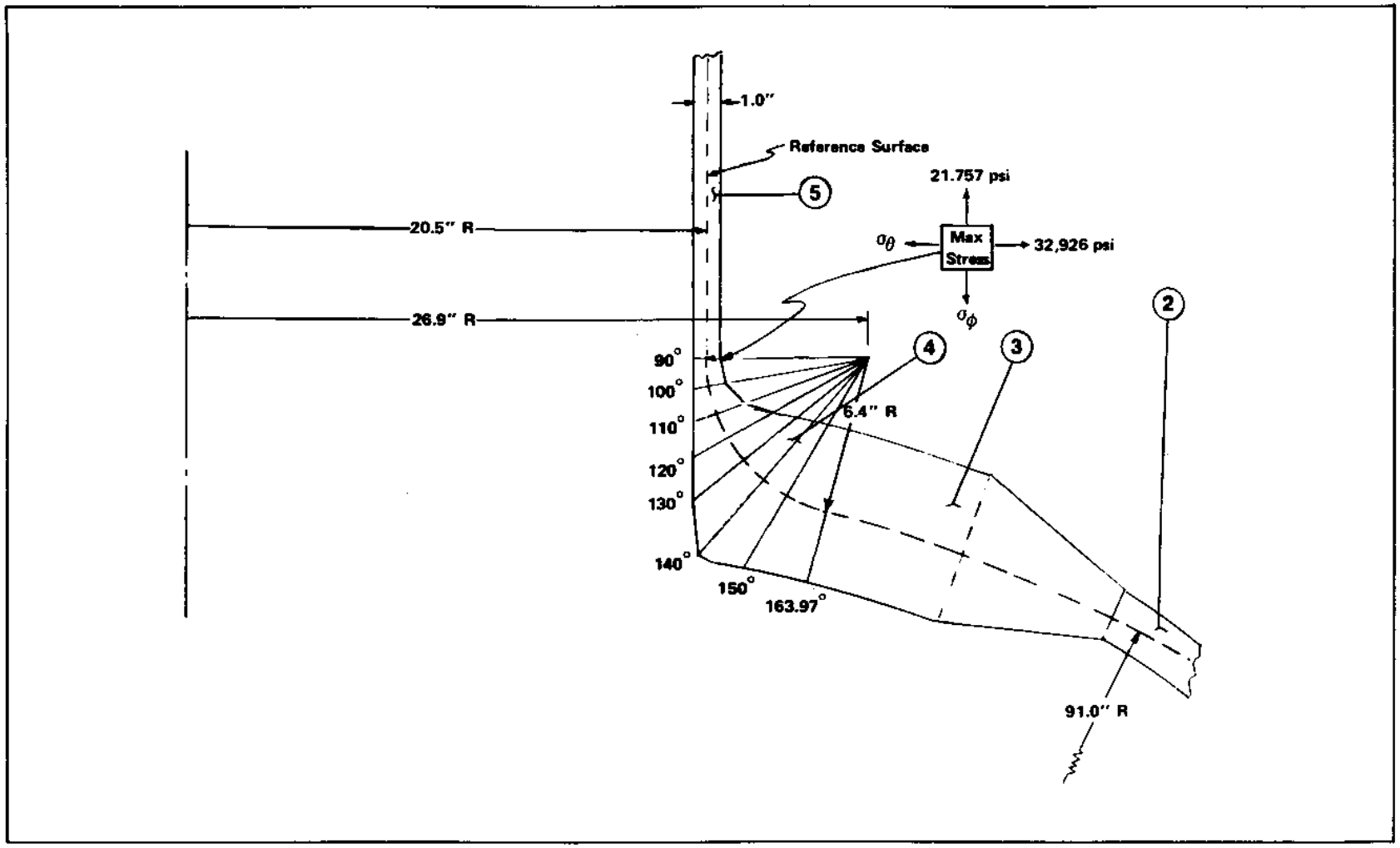

FIGURE 2-19
Details of Geometric Model of the 40.0-Inch Entranceway Reinforcement

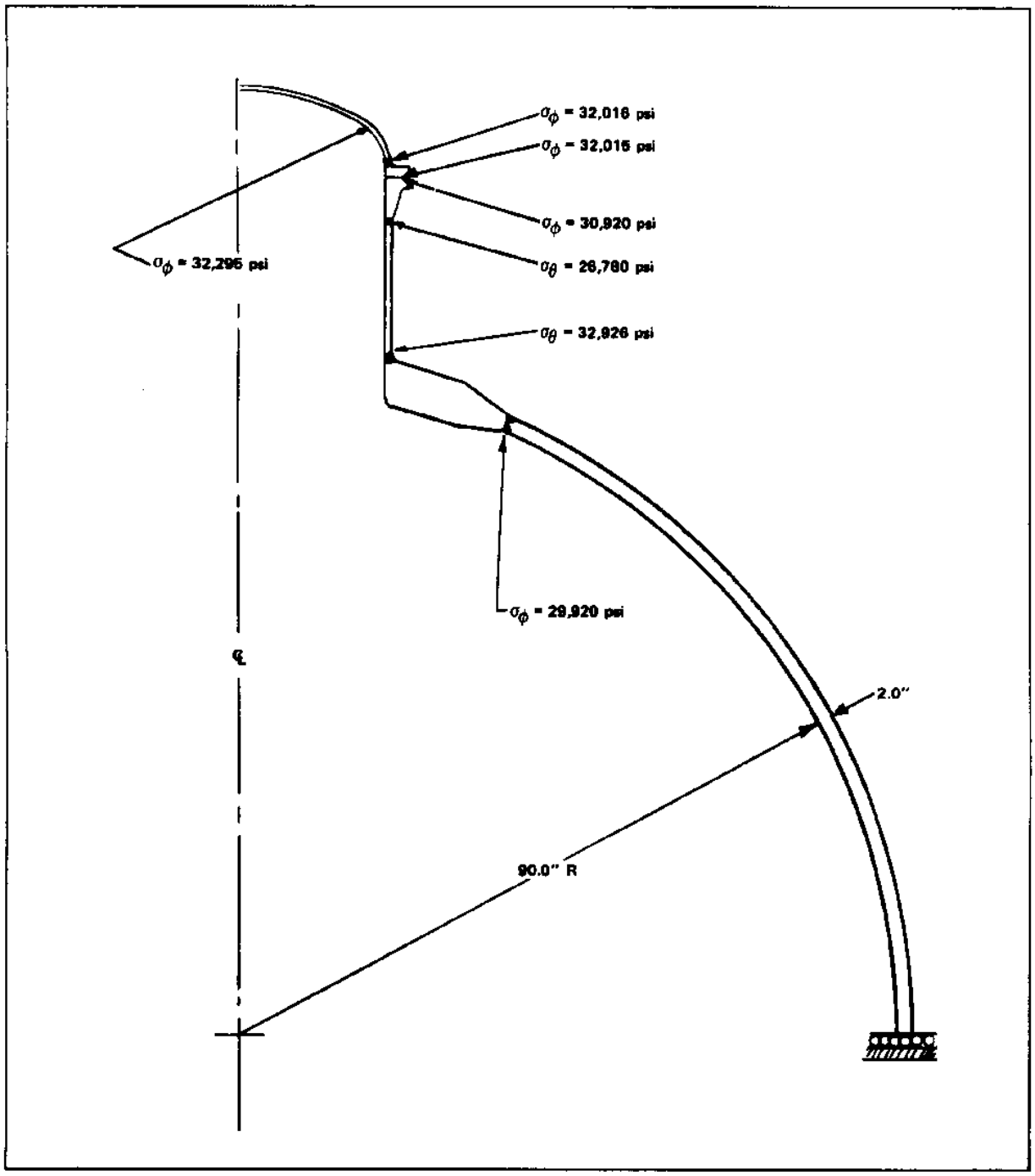

FIGURE 2-20
Some Maximum Stresses in Model No. 2

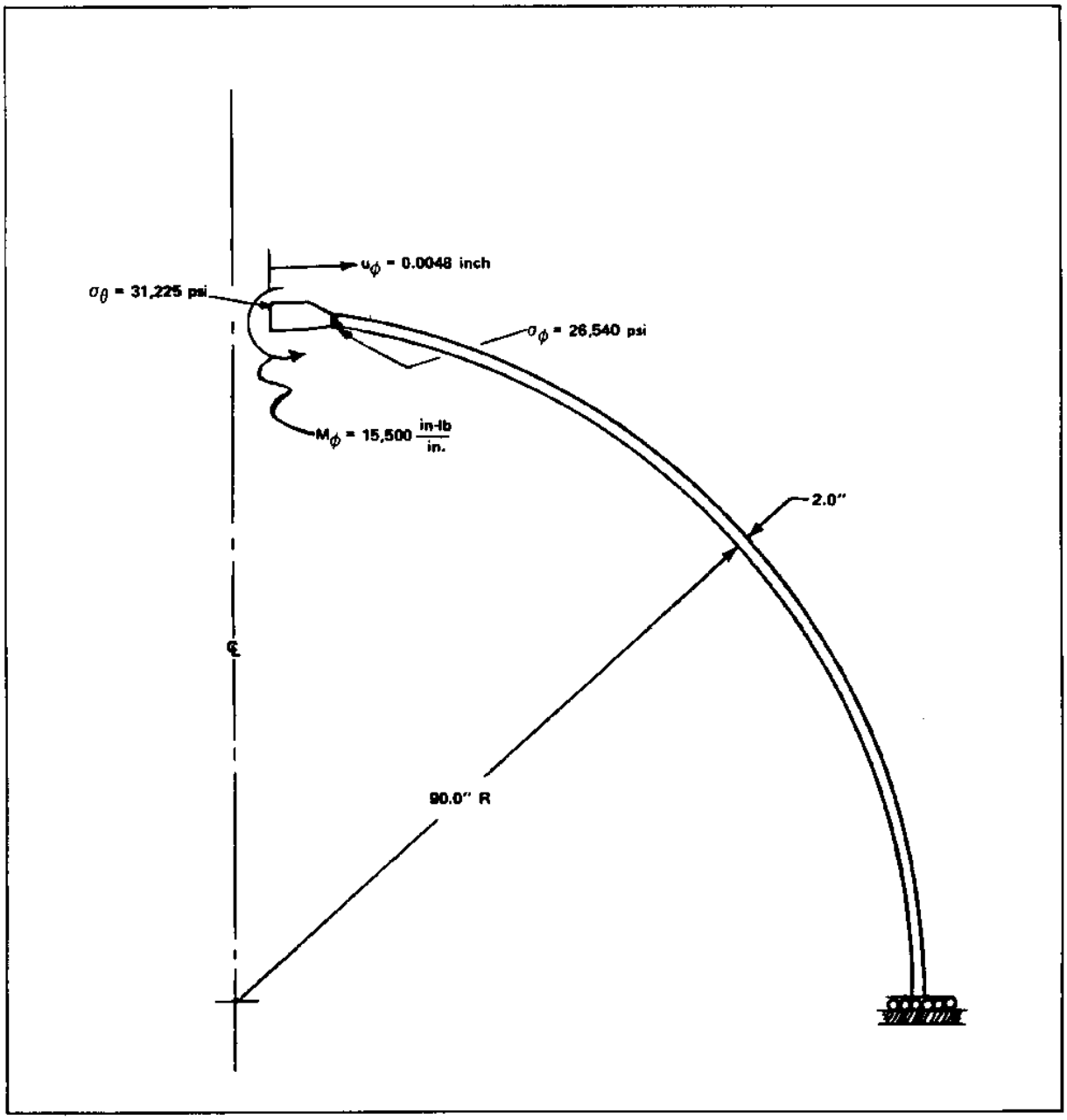

FIGURE 2-21
Some Maximum Stresses in Model No. 3

SIGMA PHI STRESSES			SIGMA THETA STRESSES		
Membrane	Inner	Outer	Membrane	Inner	Outer
9,905	-1,948	21,757	29,371	25,815	32,926

For this point the stresses can be categorized as follows:

P_m = 9.905 psi in [PHI] direction

P_L = 29,371 psi in [theta] direction*

P_b = 0

Q = 11,852 psi on the inner surface in the [PHI] direction
= -3,555 psi on the inner surface in the [theta] direction
= +11,852 psi on the inner surface in the [PHI] direction
= +3,555 psi on the inner surface in the [theta] direction

We must also consider that there is a radial stress, $[\sigma]_r$, equal to the pressure and considered as a compressive stress acting on the inner surface and perpendicular to it. This is a surface stress and some thought must be given as to where it is placed. For instance, at any point being considered where there exists only a membrane stress, P_m, the [sigma] should be put into the Q category. The same reasoning applies to where there are only P_m and P_b stress components, as in the case of a flat head or some knuckle positions. In such a case, it would be best to consider $[\sigma]_r$ or a P_b stress. For the example being discussed, we have additional Q stress

Q = 1000 psi on the inner surface in the r direction

Finally, the peak stress components must be considered. This is usually done by denoting these as stress concentration factors, $K_{[PHI]}$, and $K_{[theta]B}$, acting in the [PHI] direction and the [theta] direction, respectively. F components are developed by multiplying the sum of the principal stresses in that location in each direction by the factor ($K_{[PHI]}$ - 1.0) or ($K_{[theta]}$ - 1.0), respectively. For instance, assume that the stresses as shown in the computer printout line above, were calculated by hand or by some cruder computer program incapable of accurately modeling the fillet radius. The effect of the reentrant corner on the outside surface would have to be determined in some manner. Assume that this geometry was estimated to induce a $K_{[PHI]}$ of 1.6 and $K_{[theta]}$ of 0.0. Then

F = ($K_{[PHI]}$ - 1) (total principal stress in [PHI] direction

F = (1.6 - 1) (21,757) = 13,054 in the [PHI] direction on the outside surface.

---

* This figure is a local membrane stress because the computer printout shows that this stress decays very rapidly as distance is measured from the geometric discontinuity.

(5) Stress Intensities. For each of the categories of stress as defined as acting at this point, the maximum stress intensities are developed. For these particular set of stresses, the stress intensities become:

$P_m = |9{,}905 - 0| = 9{,}905$ psi

$P_L = |29{,}371 - 0| = 29{,}371$ psi

$P_L + P_b = |29{,}371 - 0| - 29{,}371$ psi.

For the inner surface

$P_L + P_b + Q$ = greatest of

$|(9{,}905 - 11{,}852) - (29{,}371 - 3{,}555)| = 27{,}863$ psi

$|(29{,}371 - 3{,}555) - (-1000)| = 26{,}815$ psi

$|(-000) - (9{,}905 - 11{,}852)| = 948$ psi.

Thus $P_L + P_b + Q = 27{,}863$ psi on inner surface.

For the outer surface

$P_L + P_b + Q$ = greatest of
$|(29{,}371 + 3{,}555) - (0.0)| = 32{,}926$ psi

$|(9{,}905 + 11{,}852) - (29{,}371 + 3{,}5555)| = 11{,}169$ psi

$|(0.0) - (9{,}905 + 11{,}852)| = 27{,}757$ psi.

For the inner surface F = 0, thus

Thus $P_L + P_b + Q + F = 27{,}863$ psi.

For the outer surface F = 13,054 in the [PHI] direction only; thus,

$P_L + P_b + Q + F$ = greatest of

$|(9{,}905 + 11{,}852 + 13{,}054) - (29{,}371 + 3{,}555 + 0)| = 1{,}737$ psi

$|(29{,}371 + 3{,}555) - (0.0)| = 32{,}926$ psi

$|(0.0) - (9{,}905 + 11{,}852 + 13{,}054)| + 34{,}811$ psi.

Thus for the outer surface

$P_L + P_b + Q + F = 34{,}811$ psi.

This procedure is not as cumbersome as it seems, but it does take a little getting used to. Most computer programs will calculate the total stresses at any point. All the terms in each of the quantity brackets, (), above are actually the same as those shown as the inner and outer stresses in the computer printout.

EXCEPTION: There is the one exception to this where one of the brackets contains the F component which was calculated separately. This is the exact procedure you would follow if you were doing your discontinuity stress calculations by hand as shown by the example in Article 4-7, Paragraph 4-730 of Section VIII, Division 2. The maximum stress intensities occurring in each part of the three models were calculated and are shown in Tables 2-3, 2-4, and 2-5.

To be very conservative, stress concentration factors of k┌PHI┐, k┌[theta]┐ = 2.0 were assumed to act at all welds where there occurred a thickness change. This is a highly conservative assumption and is only made here for example's sake. For good full penetration welds, particularly butt welds, that are ground smooth and flush and all imperfections removed there really should be no noncalculable stress concentration at all. This is only true, of course, if the stresses that you have calculated are based on a model geometry that truly mathematically modeled the weld geometry.

(6) Stress Intensity Limits. The stress intensity limits for this vessel were determined as

P┌m┐	< / = 23,200 psi
P┌L┐	< / = 34,800 psi
P┌m┐ (or P┌L┐) + P┌b┐	< / = 34,800 psi
P┌L┐ + P┌b┐ Q	< / = 69,600 psi
P┌L┐ + P┌b┐ + Q + F	< / = 74,000 psi

Examining the values listed in Tables 2-3 through 2-5, it is noted that, even with the very conservative assumptions of high stress concentration factors at all the welds where a change of thickness takes place, the maximum stress intensities shown are quite acceptable with but two exceptions. These occur in Parts 8 and 11 in Model No. 2, listed in Table 2-5. The stress concentration of 3.0 used here is a realistic one, These parts are the portions of the flanges inwards from the bolt circle or clamp contact ring. Geometrically, the flanges are flat annular plates. The high stresses occur at the bolt circle position and are almost wholly bending stresses. If bolt holes are present and the diameter of these holes are smaller than the thickness of the flange, as is the usual case, then the stress concentration at the hole would be greater than 2.2* and would approach 3.0 as the holes got smaller as compared to the plate

---

* Note: See Reference 25, Peterson, Stress Concentration Design Factors, Figure 85, page 101, 1966.

(flange) thickness. If a clamp arrangement is employed, local high spots in either the clamp or the flange could cause such a stress concentration. In either case, it becomes necessary to increase the thickness of flanges so as to reduce the nominal stress to an acceptable level, Such an acceptable stress is calculated by dividing 2 S_{a} by the stress concentration, K, expected to act at the point of interest, as

$$[\text{sigma}]_{nom} = \frac{2\ S_{a}}{K} = \frac{74{,}000}{3.0} = 24{,}667 \text{ psi.}$$

Because the stress in the flange is almost completely a bending stress, the additional thickness required for the flange can be determined by the relationship between bending moment, thickness and stress in a plate or shell. This relation is

$$[\text{sigma}]_{B} = \pm \frac{6M}{t^2}$$

where $[\text{sigma}]_{B}$ = the bending stress on the surface, psi

M = the moment acting in the shell at the point of interest, $\frac{\text{in-lb}}{\text{in.}}$

t = the thickness of the shell, inches.

It can be assumed that a small thickness addition to the flange will not change the bending moment in the shell at this point. Thus,

$$[\text{sigma}]_{nim} = \frac{6M}{(t + [\text{DELTA}]T)^2} = \frac{6M}{t_{reg}^2}$$

where [DELTA]T = the increase in shell thickness

$t_{reg} = t + [\text{DELTA}]t.$

Because M in each case is assumed identical the equations for $[\text{sigma}]_{B}$ and $[\text{sigma}]_{nom}$ may be equated resulting in:

Because M in each case is assumed identical the equations for σ_B and σ_{nom} may be equated resulting in:

$$t_{reg} = t\sqrt{\frac{\sigma_B}{\sigma_{nom}}}$$

For the flange as initially designed, t = 1.5 inches, σ_B = 32,015 psi

$$\sigma_{nom} = 24{,}667 \text{ psi}$$

$$t_{reg} = 1.5\sqrt{\frac{32{,}015}{24{,}667}} = 1.71 \text{ inches.}$$

Thus set the new thickness of the flange at

$$t_{\Gamma flange\urcorner} = 1.75 \text{ inches.}$$

TABLE 2-3
Maximum Stress Intensities in Model No. 1

Part No.	Location and Direction(1)	P_m	P_L	P_m (or P_L) + P_b	$P_L + P_b + Q$	$P_L + P_b + Q + F$
1	Along entire length in ϕ direction	1,215	-	-	-	1,215
2	At junction to sphere on inner surface in the ϕ direction.	1,215	-	-	28,400	56,800(2)
3	At junction to cylindrical support skirt on outer surface in the ϕ direction	-	22,760	-	21,600	43,200(2)
4	At the weld joint to the nozzle on the inner surface in the θ direction	-	17,625	-	35,705	71,410(3)
5	At the inner corner of the nozzle, in the θ direction	-	19,660	-	39,500	39,500(4)
6	At the weld where the nozzle joins the pipe on the inner surface in the θ direction		21,070	-	22,160	44,320(3)
7	Same as 6 above					
8	At junction to cylindrical support skirt on the outer surface, in the ϕ direction	-	22,790	-	24,375	48,750(2)
9	At the wled joint to the no nozzle on the inner surface in the θ direction	-	17,741	-	35,940	71,880(3)
10	At the inner corner of the nozzle, in the θ direction	-	19,880	-	39,750	39,750(4)
11	At the weld where the nozzle joints the pipe, on the inner surface, in the θ direction	-	21,206	-	22,310	44,620(3)
12	Same as 11 above					

Notes: (1) Direction here means the direction of the largest value (in an absolute sense) of the two principal stresses composing the stress intensity; i.e. the larger of σ_i or σ_j in $S = |\sigma_i - \sigma_j|$.

(2) This includes a stress concentration factor of 2.0 assumed to act at the weld.

(3) This includes a stress concentration factor of 2.0 acting at the weld. It is very conservative value if the weld is ground smooth and flush and all imprefections removed.

(4) No stress concentration is assumed since geometry was closely modeled.

TABLE 2-4
Maximum Stress Intensities in Model No. 2

Part No.	Location and Direction(1)	P_m	P_L	P_m (or P_1) + P_b	$P_L + P_b + Q$	$P_L + P_b + Q + F$
1	Along entire length of shperical section, same in both directions	22,750	-	-	-	22,750
2	At weld where sphere joins forged reinforcement transition, in Ø direction on inner surface	-	23,409	-	30,920	61,840(2)
3	Same as 2 above					
4	At the top part of the 2.0 in radius overlay fillet weld, on the outer surface in the θ direction	-	29,370	-	32,926	65,852(2)
5	Same as 4 above					
6	At the weld joining the cylinder to the taper transition of the Flange, on the outer surface in the θ direction	-	22,030	-	26,780	53,560(2)
7	Same as 6 above					
8	At the bolt circle or clamp contact point on the inner surface in the Ø direction	-	1,048	30,920	30,920	92,760(3)
9	Same as 8 above					
10	Same as 9					
11	At the bolt circle or clamp contact point on the outer surface in the Ø direction		10,090	32,015	32,015	96,045(3)
12	At weld, where toroidal section of head joins flange, on the outer surface in the Ø direction		10,090		32,016	64,032(2)
13	At the tangent intersection between the spherical part of the head and the torus	13,990			26,405	26,405

Notes: (1) See note (1) Table 1.2.

(2) See note (3) Table 1.2.

(3) This includes a stress concentration factor of 3.0 to reflect presence of bolt holes of clamp contact surface.

TABLE 2-5
Maximum Stress Intensities in Model No. 3

Part No.	Location and Direction(1)	P_m	P_L	P_m (or P_L) + P_b	$P_L + P_b + Q$	$P_L + P_b + Q + F$
1	Along entire length of spherical section, same in both directions	22,750	-	-	-	22,750
2	At weld, where sphere joins transition taper of Flat Plate reinforcement, on the inner surface, in the Ø direction	-	23,780	-	27,540	45,080(2)
3	Same as 2 above					
4	At the corner of the 5.0 in. Radius opening, on the outer surface in the θ direction	-	29,480	-	31,225	62,450(3)

Notes: (1) See Note (1) Table 1.2.

(2) See note (3) Table 1.2.

(3) The detail stress distribution will depend on the manner by which the window is secured. Here we have just assumed a stress concentration factor of 2.0.

(7) Stress Index Method. One of the reasons for selecting the nozzle geometry for the 4.0 inch diameter nozzles as shown in Figure 2-10 was that such a configuration could be analyzed by the "Stress Index Method" described in Article 4-6. This method allows the determination of stress intensification factors or "stress indices" for a select set of nozzle configurations and only when such nozzles can be considered as single, isolated openings. The term "Stress Index" is defined as the ratio of the maximum stress found in such nozzles to the computed membrane stress intensity, P_m in the unpenetrated and unreinforced vessel material. Further, this method is applicable solely to vessels loaded by internal pressure. Other types of load-induced stresses such as those induced by pipe loads or thermal gradients must be determined by some other means. However, if this is done, then the total stresses acting at certain given points in the nozzle configuration may be obtained by superposition of results.

The 4.0 inch nozzles were carefully designed to meet all the specifications of Paragraphs AD-540.1, AD-540.2 and Figure AD-540.1. This latter group of paragraphs and the figure quoted assure that the nozzle shall meet all the stress intensity limits except the $P_L + P_b + Q + F = 2\ S_a$ limitation. Thus for static internal pressure loading only, such nozzle configurations require no further analysis. Paragraph 4-612 lists the Stress Indices for such nozzles. For internal pressure loading, all the Stress Indices apply. If the internal pressure is the sole load then the Stress Index, S, on the inside corner is of prime importance as it sets the maximum stress intensity in the nozzle. In Paragraph 4-612 (a) "Nozzles in Spherical Shells and Formed Heads," S is equal to 2.2 on the inside corner. The calculated membrane stress intensity in an unpenetrated and unreinforced sphere is determined by

$$P_m = S_m - 0.5\ P$$

if Equation (a) of Paragraph AD-201 was used to set the sphere's minimum thickness. For the sphere in this case

$$P_m = 23{,}200 - 0.5\ (1000.0) \quad 22{,}750 \text{ psi.}$$

The maximum stress intensity then is equal to

$$S_{max} = 2.2\ (22{,}750) = 50{,}050 \text{ psi.}$$

There are no P_L, P_b, or Q stress components in an unpenetrated spherical shell away from any other opening or other type of discontinuity. Thus

$$P_m < S_m$$

$$P_m \text{ (or } P_L) + P_b + Q = S_{max}\ 2.2\ P_m < 3.0\ S_m$$

$$P_L + P_b + Q + F = S_{max} = 50{,}050 < 74{,}000 = 2\ S_a.$$

As can be seen from the above, all the static stress intensity limits are met. Further this evaluation shows that the maximum stress intensity in the nozzle is lower than the 2 S_a limit imposed for 10,000 cycles of 0-1000 -O psig load.

From Table 2-3: "Maximum Stress Intensities in Model No. 1", for Part 10, "at the inner corner of the nozzle", $P_{[1]} + P_{[b]} + Q + F$ is shown as 39,750 psi. This value is accurate, thus the stress Index Method has generated conservative results. Experience has shown that this is always so.

(8) Design Changes. In the normal process of design by analysis, it would be expected that the initial design would be inadequate in several locations from the viewpoint of the stress intensity limitations. In this example, only two of the vessel's components were found inadequate, i.e., the flanges for the "door." The next step in this procedure would be to go back to the original design, change the thickness or geometry of the shell at its point of inadequacy and reanalyze the structure. This will not be done here for the example of the procedure would simply be a repeat of all of the preceding. However, this process is continued until the vessel can be shown to be entirely adequate as regards all the stress intensity limitations.

(9) Viewport Design Considerations. The viewports themselves were not analyzed in this example for two reasons: (1) for the high pressure operation considered such viewports would be massive, intricate affairs that would probably require experimental evaluation; and (2) they fall into the category of Appurtenances and are treated in Chapter 3 of this manual.

CAUTION: However, the designer is cautioned that the viewports do form a part of the main pressure boundary of the vessel and as such should be evaluated according to the provisions of Section VIII, Division 2.

If it is decided to analyze the viewports separately from the vessel (as was partially done here) then the designer must ensure that continuity conditions are maintained between the contact boundaries of the viewport and those of the viewport penetrations. Only a constraint against rotation was imposed on the inner boundary of the 10.0 inch viewport penetration. This constraint developed a 15,500 $\frac{\text{in-lb}}{\text{in.}}$ bending moment on the edge and a radial displacement of 4.8 mils at this location. In the design of the viewport such conditions must be applied to the model developed for this component, For instance, if the viewport is to be connected to the reinforcement ring by means of bolts then provision must be made to ensure at least a 5.0 mil clearance around the bolts when the vessel is under load so as to prevent them from acting in a shear load carrying capacity. Further, the seal design must incorporate provision for such a relative displacement between the viewport and the mounting ring. Finally, the effects of the bolt holes and the exact geometry of the viewport mounting ring interface must be carefully examined as to their impact upon the local stress picture.

(10) Door Closing Mechanism. The "door" closing mechanism was only simulated in this example by the two 11,000 $\frac{\text{lb}}{\text{in.}}$ ring loads as explained. This component, too, is considered an appurtenance. However, what was said about the viewports is true here. The interaction between the flanges and the means of securing the "door," whether bolts or, more probably, a "c" type clamp is of extreme importance from the viewpoints of both proper sealing and the fatigue

life of the clamping mechanisms. For instance, in the original design, the

$$11{,}000 \frac{\text{lb}}{\text{in.}}$$

load was chosen as to simulate a preload greater than the separating force caused by the internal pressure acting upon a 40.0 inch diameter. However, the computer program calculated that the flanges would actually tend to pivot about the outside contact line of the flanges and at the point of application of the 11,000 $\frac{\text{lb}}{\text{in.}}$ ring loads the flanges separated by 0.8 mils. This indicates that the preload was insufficient and the clamping mechanism would be subjected to a fatigue loading. Further, the computer output showed that at the inner seal position the flanges would separate by approximately 8.0 mils. The increase in flange thickness would decrease this 8.0 mil separation but would have little effect upon the flange separation at the line of load application. Thus a greater preload is required.

(11) Miscellaneous Considerations. Small penetrations for instrumentation and other types of small closures not requiring reinforcement of the vessel wall should be so designed as to prevent any local bending moments from being applied to the shell. Further, consideration should be given to the seal configuration employed so as to prevent the formation of crevices in the vessel wall.

The design of lifting lugs and the effect that their means of attachment to the shell have on the local stress condition in the shell must be determined by the designer. Again strong emphasis is placed on the prevention of crevices and local stress concentration configurations. The same is true about any types of attachments to the shell, whether outside the shell, as say the hinging mechanism of the "door" or inside the shell, such as the attachments for floors or other interior structures. The methods of attachments for such devices should be governed by the provisions of Article D-9, "Attachments and Supports." Where there are interior attachments which will be subjected directly to a seawater environment great care must be taken to ensure the prevention of crevices and other localized areas of corrosion attack.

d. Design Finalization. When all of the above procedures have been carried out, the pressure vessel has been designed to meet the adequacy test of the stress intensity limits. However, inherent in all the "design by analysis" procedure described above is the understanding that the basic design dimensions developed and analyzed were in the "as corroded" condition. This means that what has been developed is a vessel having components whose dimensions are as they would be at the end of its design life, in this case, after 20 years of operation. The designer must, at this time, give some consideration to material loss and dimension changes due to corrosion.

The outside of the vessel can be painted and such covering can be easily maintained and inspected. The inside of the chamber may also be painted. In this case, the designer must show that such paints do not give off noxious fumes, or enter into a rapid chemical reaction with seawater or oxygen, at the temperatures and pressures specified for this chamber (this is true after the drying and curing of the paint).

The designer decides to do both above, i.e., paint the inside and the outside of the vessel. However, as a conservative measure he also decides to add a corrosion allowance to all the vessel components that will be in direct contact with seawater. Considering that the vessel will be empty during a good part of its life and that normal inspection routines should ensure the maintenance of the painted coating, the drawings are changed to show a thickness increase of 0.050 inches on all sections of the vessel except the support skirt.

e. Stress Documentation. The documentation submitted for the stress analysis portion of the Design Review Report could very well resemble the discussion as presented in this example. The basic design procedure need not be discussed but the final design configuration must be shown to be adequate from the viewpoints of good design practice and the stress intensity limitations, both as presented in Section VIII, Division 2.

7. EXAMPLE OF DESIGN BY ANALYSIS AS APPLIED TO A CYLINDRICAL CHAMBER. The design and analysis of a cylindrical chamber takes on greater complexity than that for a spherical chamber due to the various geometric details that exist in a cylindrical chamber which cause that structure to deviate from a body of revolution. In the following example, those design and analysis procedures which differ substantially from the previous example are discussed.

a. Specification Data. Consider that the data presented in the previous example (Paragraph 6.a) still apply, with the following changes.

(2) The vessel shall be cylindrical in shape with an inside radius of 60.0 inches and a straight length between heads of 180.0 inches. It shall have torispherical end caps.

(3) It shall be equipped with a nominal 5.0 inch diameter input pipe.

(4) It shall be equipped with a nominal 5.0 inch diameter output pipe.

(5) It shall have five (5) viewports. One in the center of one of the torispherical end caps; the other four in the cylinder wall.

(8)(f) The chamber shall be supported by two saddles.

b. Materials and Initial Calculations. As before, carbon steel, ASTM Specification A-516, Grade 70 is chosen as the material from which to fabricate both the chamber and the saddles. Thus our stress intensity limits remain

$$P_m < / = 23{,}200 \text{ psi}$$

$$P_L < / = 34{,}800 \text{ psi}$$

$$P_m \text{ (or } P_L) + P_b < / = 34{,}800 \text{ psi}$$

$$P_L + P_b + Q < / = 69{,}600 \text{ psi}$$

$$P_L + P_b + Q + F = 2\ S_a < / = 74{,}000 \text{ psi.}$$

(1) Membrane Stress Intensity Limit. From Table AD-150.1, the factor to apply to the Membrane Stress Intensity is 1.0.

(2) Minimum Shell Thickness. From paragraph AD-201 (a), the minimum shell thickness for the cylindrical portion of the chamber is calculated from

$$t_{cy} = \frac{PR}{S-0.5P} \text{ (for internal pressure only}$$

t_{cy} = minimum required thickness of cylinder, inches

P = design pressure, psi

R = inside radius of cylinder, inches

S = Membrane Stress Intensity Limit, psi

$$\text{thus } t_{cy} = \frac{(1000.0)(60.0)}{23{,}200 - 0.5\ (1000)} = 2.64 \text{ inches}$$

use t_{cy} = 2.75 inches.

From paragraph AD-204.2, the minimum thickness for an equivalent torispheroidal head with D/2h = 2 is given as the greater of

$$t_h = \frac{KPD}{2S}$$

or

$$t_h = \frac{PD}{2-SP}.$$

From Figure AD-204.1, K = 1.05

$$\text{thus } t_{h1} = \frac{(1.05)(1000.0)(120.0)}{2(23{,}200)} = 2.72 \text{ inches}$$

or

$$\text{thus } t_{h1} = \frac{(1000.0)(120)}{2(23{,}200) - 1000} = 2.643 \text{ inches.}$$

Thus choose the thickness of the heads as

t_h = 2.75 inches.

As before, for this head. D/2h = 2, L/D = r/D = 0.17, thus

h = 120/4 = 30.0 inches
L = (120)(0.9) = 108.0 inches
r = (120) (0.17) = 20.4 inches.

(3) Penetrations and Openings, Reinforcements. From paragraph AD-510 of Article D-5, the maximum diameter penetration (isolated) that requires no reinforcement is

$$D_{max} = 0.2\sqrt{RT} = 0.2\sqrt{(60.0)(2.75)}$$

$$D_{max} = 2.6 \text{ inches for the cylinder}$$

and

$$D_{max} = 0.2\sqrt{(108)(2.75)}$$

$$D_{max} = 3.45 \text{ inches for the spherical portion of the head.}$$

Thus all the major penetrations specified, the entranceway, the viewport penetrations, and the inlet and outlet nozzles require reinforcement.

(4) Inlet and Outlet Nozzles. The inlet and outlet nozzles are designed to meet the specifications of paragraphs AD-520, 540.1, 540.2(a) and Figure AD-540.1(b) as described in the previous example. The geometry of these nozzles is shown in Figure 2-22. Here the notation [theta] is the angle that the sectioning plane makes with the plane containing the longitudinal axis of the cylinder.

(5) Viewport Penetration in Center of End Cap. Here, as before, it was decided to use the type of viewport as portrayed in Figure 3-6 in Chapter 3. It will again be assumed that a 10.0 inch diameter penetration is required. The development of this reinforcement in the center of the spherical portion of the end cap is exactly as before and the details of this reinforcement are shown in Figure 2-23.

(6) Entranceway. It is required to have a 40.0 inch inner diameter entranceway in the center of the other end cap of the cylinder. The area to be replaced by some sort of reinforcement is

$$A_{[r]} = dt_{[r]} = (40.0)(2.72) = 108.8 \text{ in.}^{[2]}$$

with one-half or 54.4 in$^{[2]}$ on each side of the centerline of the opening. It is decided to use, as reinforcement, an inserted, thick-walled cylinder with inner diameter equal to 40.0 inches. Section VIII, Division 2, gives no guidance for the design of such a reinforcement. However, Section VIII, Division 1, can be helpful in this case. Paragraph UG-40, "Limits of Reinforcement" states that the limits of reinforcement measured normal to the vessel wall shall conform to the contour of each surface limited to a distance from each surface to two and one-half (2-1/2) times the nominal wall thickness. In this case

$$\text{Limit} = 2.5 \times 2.75 = 6.85 \text{ inches from each surface.}$$

Choosing a 4.0 inch wall thickness cylinder, the overall height of the cylinder is

$$(4.0)(h) = 54.4 + (4.0)(2.75) = 54.4 + 11.0$$

$$h = \frac{\quad}{4} \text{ [approximately] } 16.3 \text{ inches.}$$

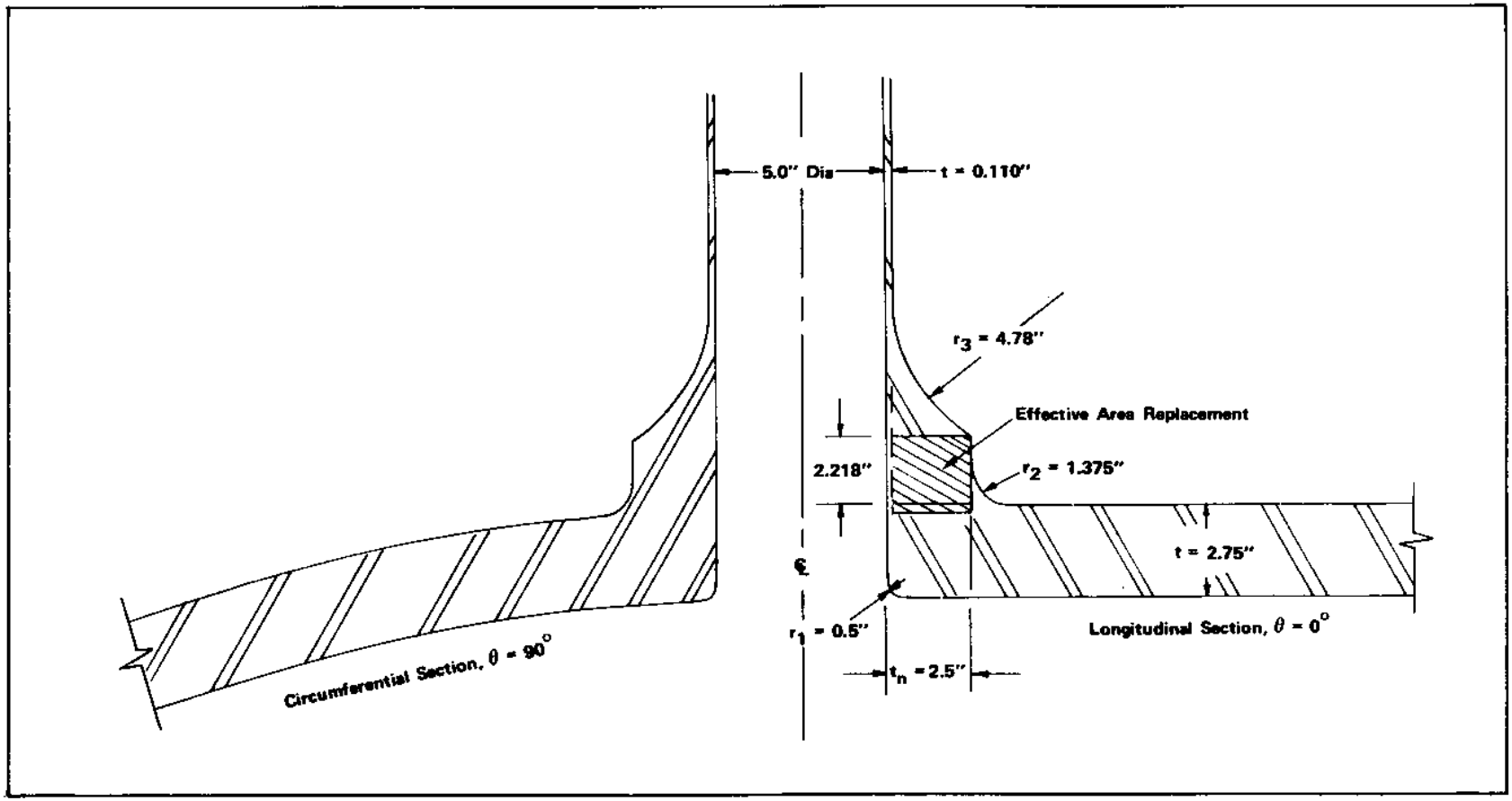

FIGURE 2-22
Configuration of 5.0-Inch-Diameter Inlet and Outlet Nozzles

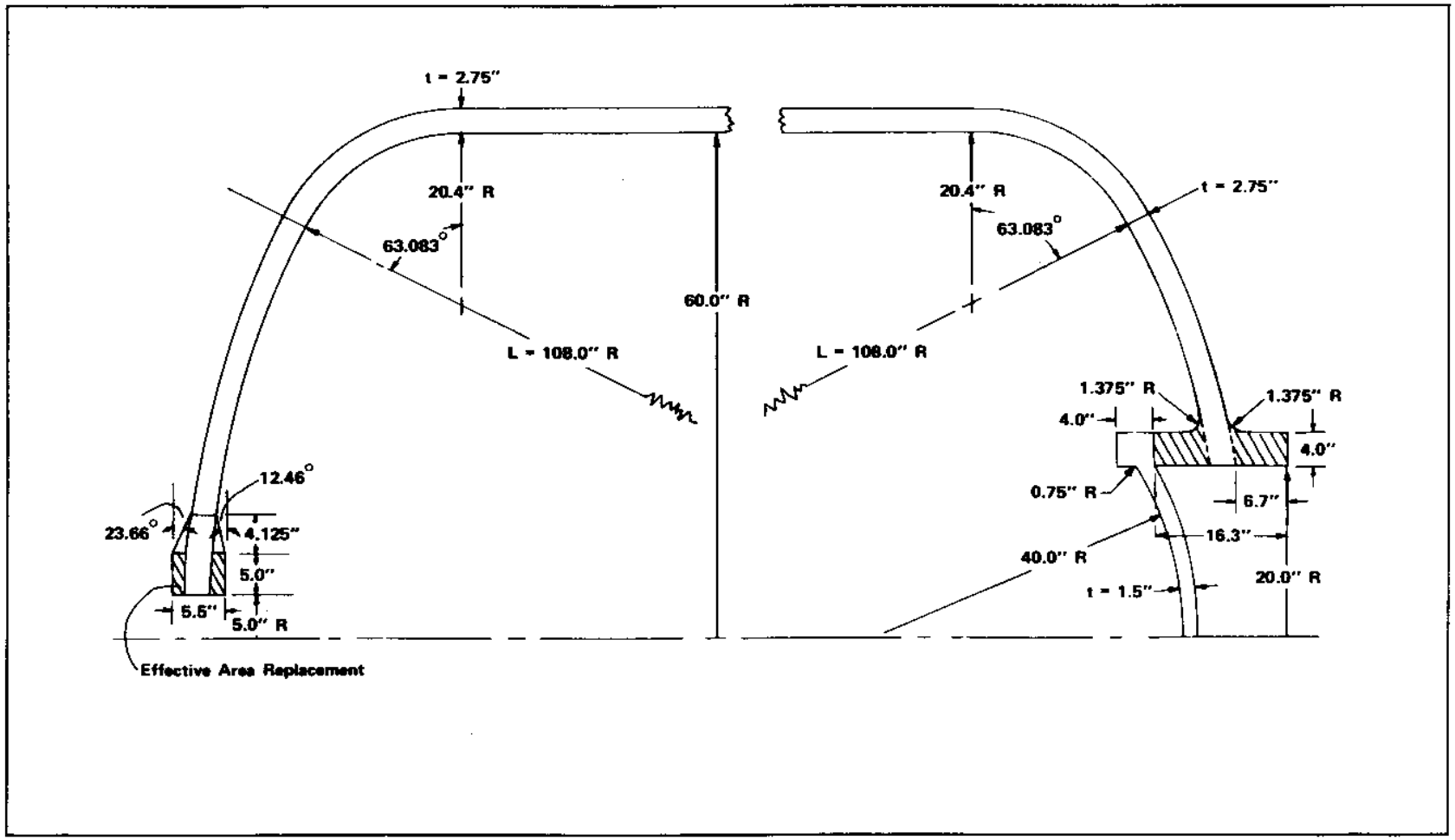

FIGURE 2-23
Details of Shell, Viewport Penetration in Head and Entranceway

The fillet radius at the intersection of the head and the inserted cylinder should be at least equal to one-half the thickness of the head to minimize the stress concentration effect of the intersection. The details of the geometry of the entranceway cylinder are shown in Figure 2-23.

(7) Hatch. It was decided to use a spherical segment, pressure-activated hatch configuration. Such a configuration is simply a spherical cap bordered by a relatively thick compression ring which also acts as the seating surface. The pressure acts on the concave side of the cap. Here again Section VIII, Division 2, gives no specific guidance of such a configuration. Some guidance can be attained from Section VIII, Division 1, Appendix paragraph 1-6, "Spherically Dished Covers (Bolted Heads). It was decided to use a configuration as shown in Figure 1-6 (d). For such a configuration the thickness of the spherical part is given by

$$t = \frac{5PL}{6S}$$

where t = minimum thickness of spherical portion of cover, inches

P = design pressure, psi

S = membrane stress intensity limit, psi

L = inside spherical radius, inches.

It is good practice to choose L to be at no more than twice the radius of the opening to be covered. In this case L = 40.0 inches.

Thus $$t = \frac{5(1000)(40.0)}{6(23,000)} = 1.44 \text{ inches}$$

use $t = 1.5$ inches

The compression ring which forms the border of the hatch must match up with the entranceway cylinder. Thus, for simplicity assume that the width of the ring is the same as the cylinder thickness, or 4.0 inches. The thickness of the ring is determined from

$$T = F\left[1 + \sqrt{1 + \frac{J}{F^2}}\right]$$

where $$F = \frac{PB\sqrt{4L^2 - B^2}}{8S\,(A - B)}$$

$$J = \left(\frac{M_o}{SB}\right)\left(\frac{A + B}{A - B}\right)$$

P = design pressure, inches

B = inner diameter of ring, inches

A = outer diameter of ring, inches

S = membrane stress intensity limit, psi

L = inside spherical radius of cap, inches

M_o = moment due to bolt loads, $\frac{\text{in-lb}}{\text{in.}}$

The hatch is to be pressure-activated. There will be no bolts and hence no bolt loads, thus $M_o = 0$ and

$$J = 0$$

$$F = \frac{(1000)(40.0)\left(\sqrt{(4)\,(40.0)^2 - (40.0)^2}\right)}{(8)(23,200)(48.0 - 40.0)} = 1.865 \text{ inches}$$

$$T = F\left[1 + \sqrt{1 + 0}\right] = 2F = 3.73 \text{ inches.}$$

To be conservative let T = 4.0 inches. The details of the hatch geometry are shown in Figure 2-23. Note the use of a fillet radius equal to one-half the cap wall thickness at the intersection of the cap and the compression ring. Figure 2-23 also shows the details of the tori-spherical end caps.

(8) Supports. The supports are to be saddles. Saddles are not bodies of revolution and their design is rather involved. The only guidance that Section VIII, Division 2 gives is found in Article D-9, "Attachments and Supports," Paragraph AD-940, "Design of Supports" is very general. Subparagraph (d) of this paragraph does set one limit requiring that "Horizontal vessels supported by saddles shall use saddles such that they afford bearing to extend over at least 1/3 of the shell circumference." A good treatment of the design and analysis of saddle supports is given by Zick (see Reference 26, Zick, Stresses in Large Horizontal Cylindrical Pressure Vessels on Two Saddle Supports, 1951). Because of the complexity of the design analysis of saddles supports, no details of design or analysis for the supports will be given here. However, the saddles are shown schematically in Figures 2-24, 2-25, and 2-26. These saddles are built up from 1.0 inch thick plate sections as shown.

(9) Viewport Penetrations in Cylinder Wall. The viewport penetrations in the cylinder wall are designed in the same manner that was applied to the viewport penetrations in the head and the spherical chamber. The details of these penetrations are shown in Figure 2-27. Note the variation in taper transition zones as r goes from zero to 90 degrees.

c. Stress Analysis. As before, the above procedure forms the first phase of a design by analysis. Again note that the vessel has been designed to be "smooth."

(1) Loading Conditions. The only loading condition considered was an internal pressure of 1000 psig.

(2) Requirement for a Fatigue Evaluation. As before, all parts of Condition A or all parts of Condition B of paragraph AD-160.2 are not met and a fatigue evaluation is required.

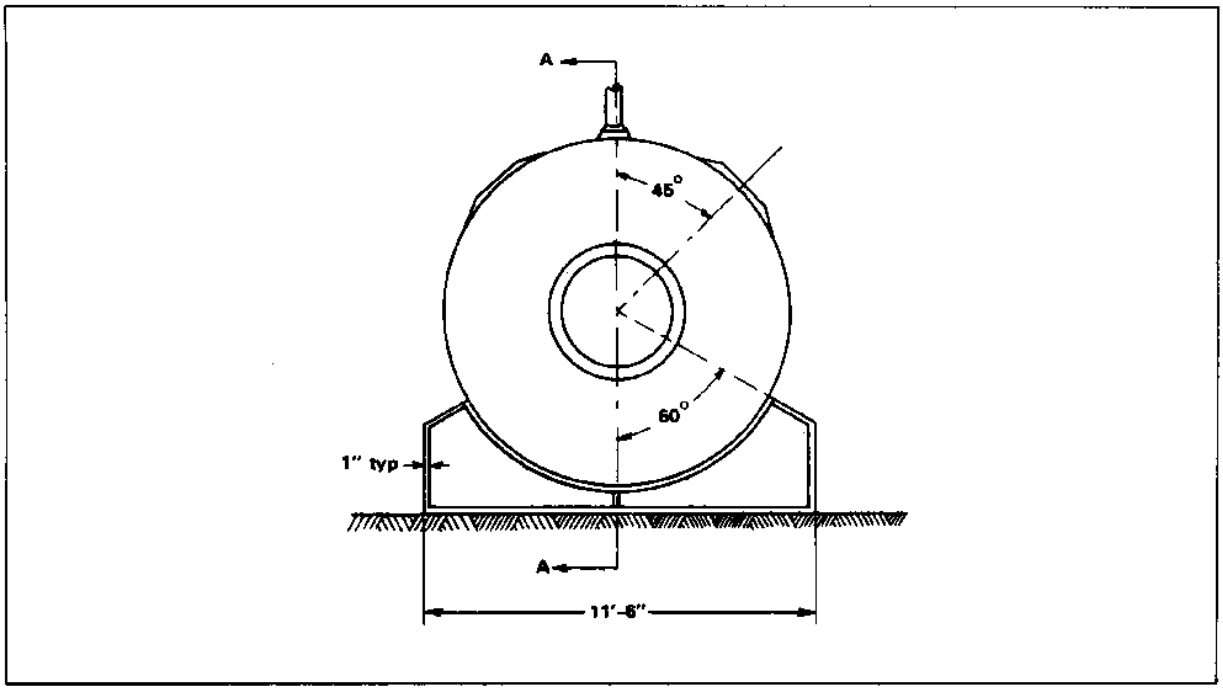

FIGURE 2-24
Front View of Cylindrical Chamber

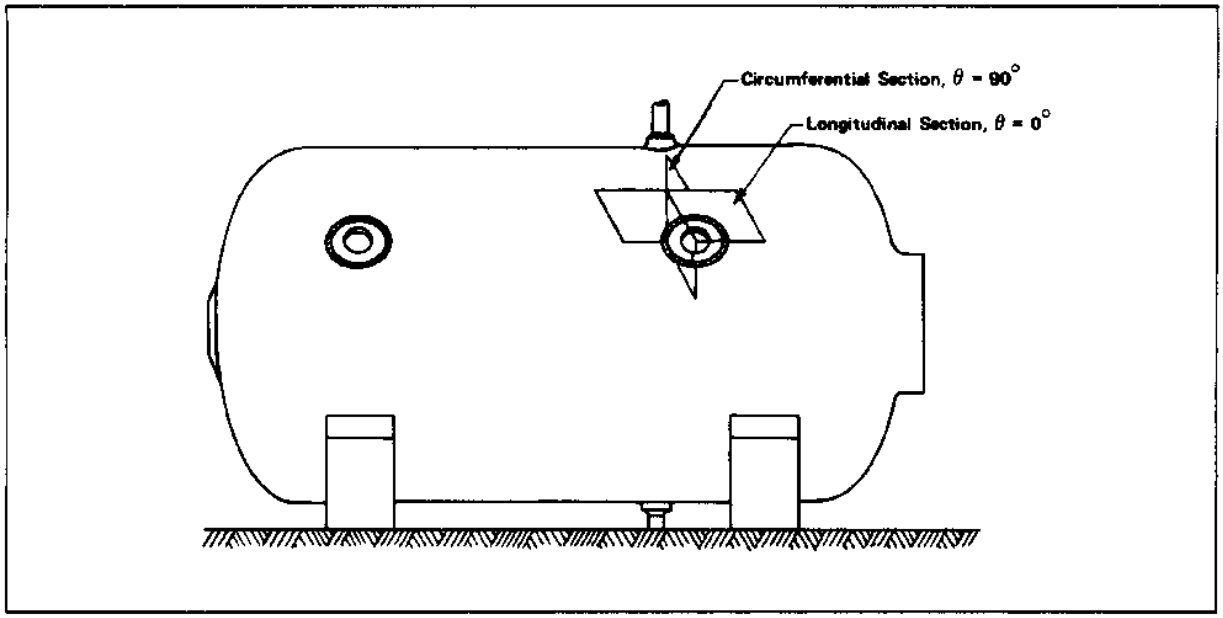

FIGURE 2-25
Side View of Cylindrical Chamber

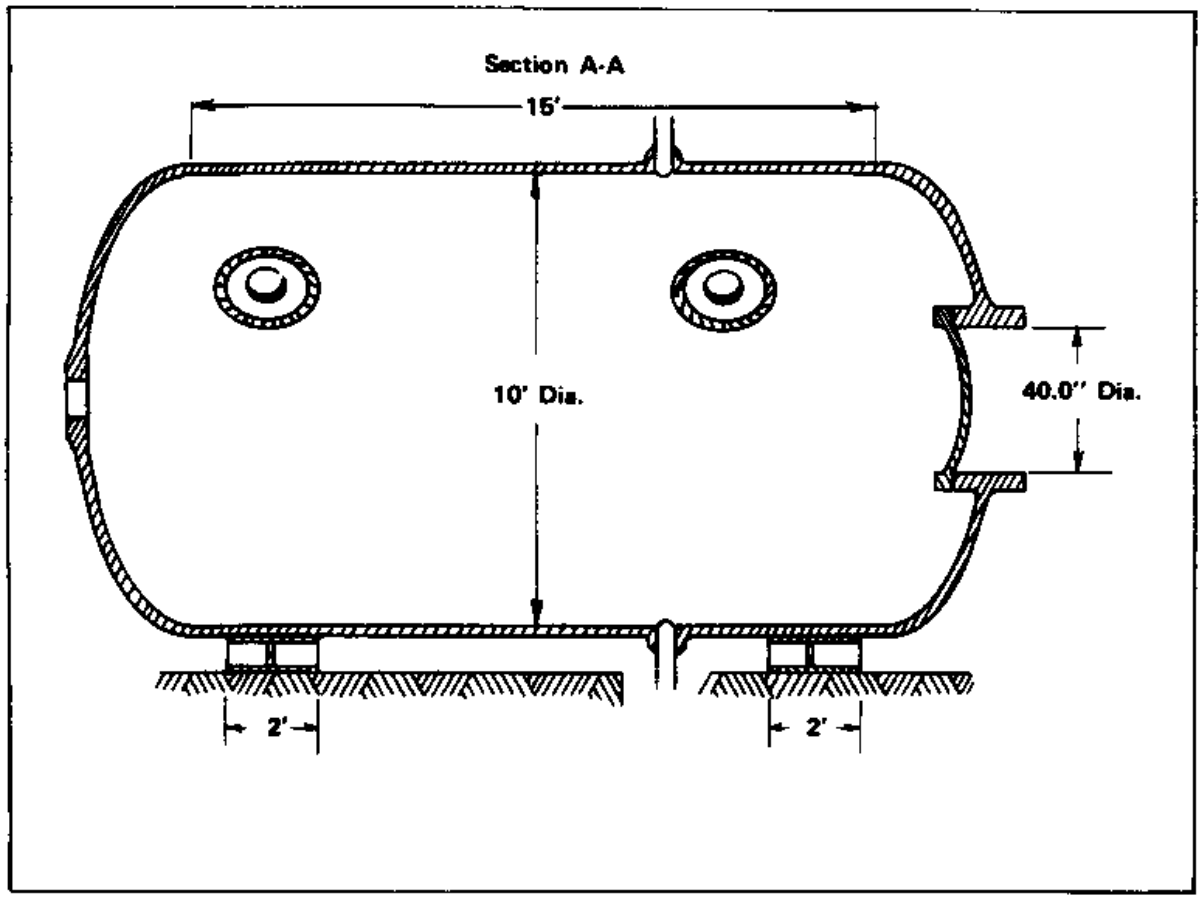

FIGURE 2-26
Longitudinal Section of Cylindrical Chamber

(3) Method of Analysis-Symmetric Problems. As in the previous example, the computer program was used to analyze those portions of the chamber that comprise bodies of revolution. The hatch end of the chamber is shown modeled for input into the computer program in Figure 2-28. The 3,269 psi pressure shown acting on the hatch seating surface is the resultant of the 1000 psi pressure acting over the area of the hatch. The computer output for tresses in the cylinder and tori-spheroidal head are shown plotted in Figure 2-29 (circumferential stress) and 2-30 (meridional stress). It is apparent that large stresses are generated in the knuckle of the tori-spherical head. It can be seen from Figure 2-30 that significant compressive membrane stress occurs in the knuckle. It is unlikely that a head such as this, designed to minimum code specifications, will buckle. However, it is recommended that the designer check this possibility by using the data presented by Eszttergar and Kraus (see Reference 27, Analysis and Design of Ellipsoidal Pressure Vessel Heads, 1970), Adachi and Benicek (see Reference 28, Buckling of Tori-spherical Shells Under Internal Pressure, 1964), and Thurston and Holston (see Reference 29, Buckling of Cylindrical

Shell End Closures, 1966).

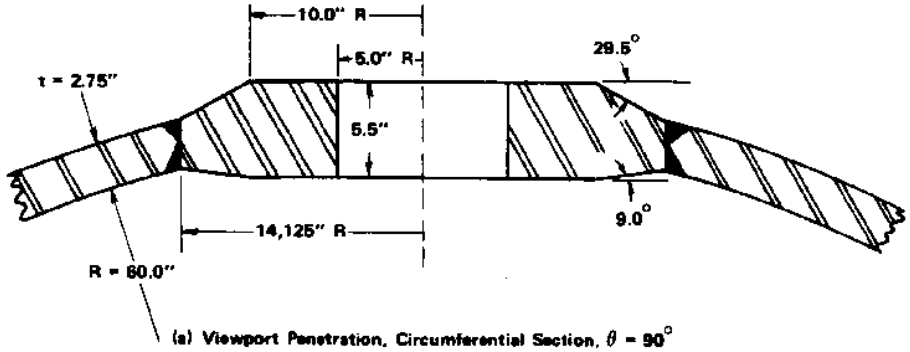

(a) Viewport Penetration, Circumferential Section, $\theta = 90^\circ$

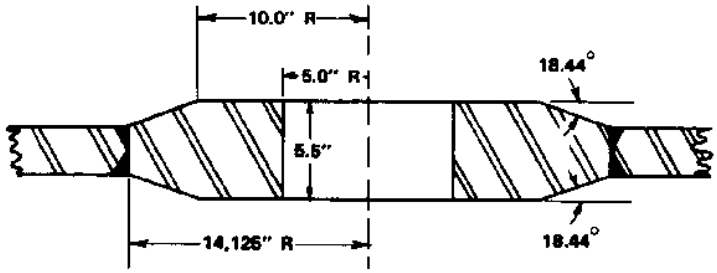

(b) Viewport Penetration, Longitudinal Section, $\theta = 0^\circ$

FIGURE 2-27
Details of Viewport Penetration Reinforcement in Cylinder

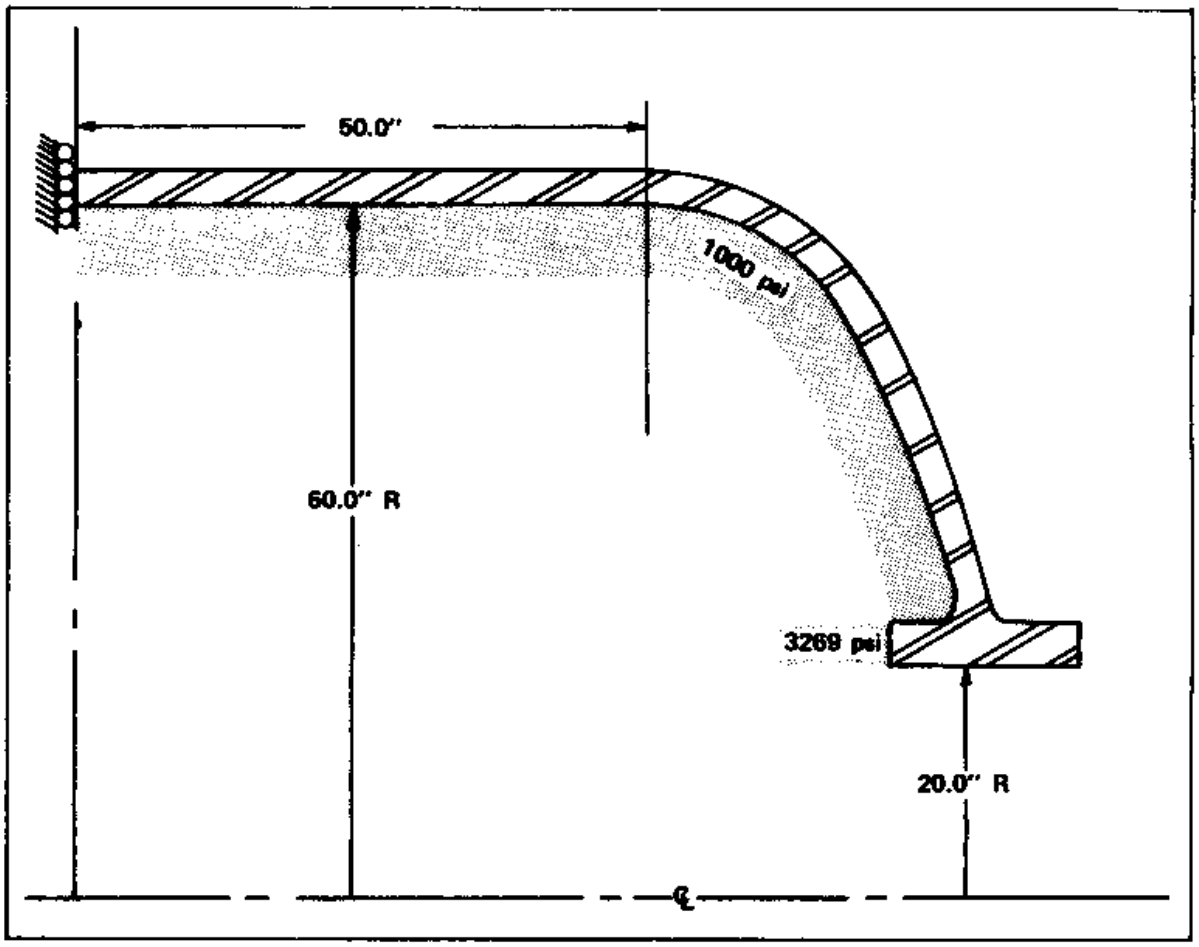

FIGURE 2-28
Model of Hatch End of Vessel for Input to Computer

The stresses developed in the other tori-spherical end cap, the one containing the 10.0 inch diameter penetration, are not shown. Except in the vicinity of the penetration, the stresses are very similar to those shown in Figures 2-29 and 2-30.

The hatch cover was modeled for computer input as shown in Figure 2-31. The stresses developed in this component are also shown plotted in this figure.

(4) Methods of Analysis-Nonsymmetric Problems. The nonsymmetric problem areas in this vessel are the 5.0 inch diameter inlet and outlet nozzles, the four viewport penetrations in the cylinder wall and the cylindrical shell in the vicinity of the saddles. The 5.0 inch diameter input and output nozzles need not be analyzed as they were designed as "acceptable" nozzle configurations from the viewpoint of static pressure stresses. The shell in the vicinity of the saddles and the saddles themselves will not be treated here since their precise analysis requires the

use of a finite element shell code capable of modeling a general shell structure. Another acceptable means of approximating the stresses in this vicinity is to apply the methods presented by Zick (see Reference 26). Finally, the stresses in this vicinity can be determined experimentally on either the actual structure or a model.

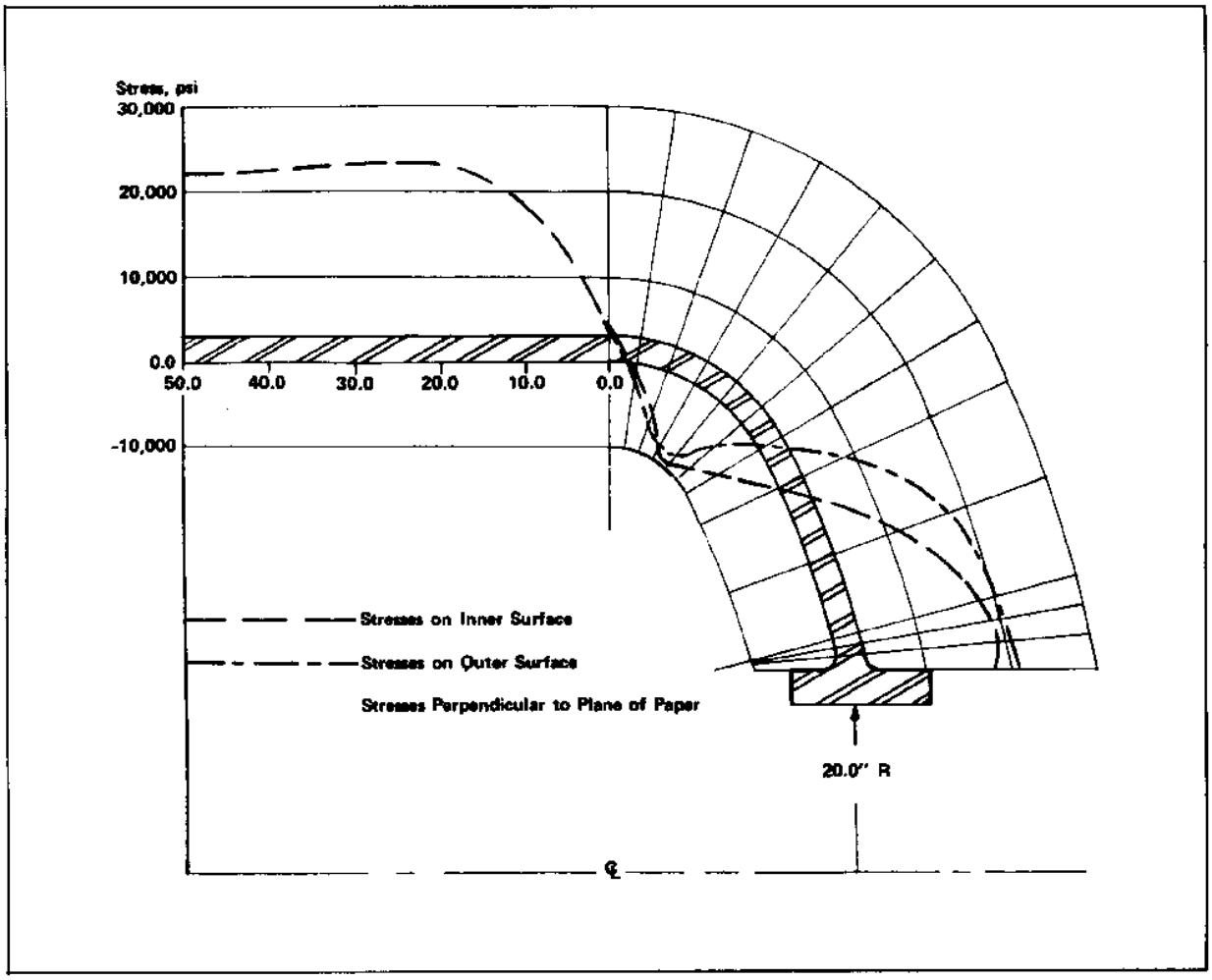

FIGURE 2-29
Circumferential Stress in Vessel at Hatch End

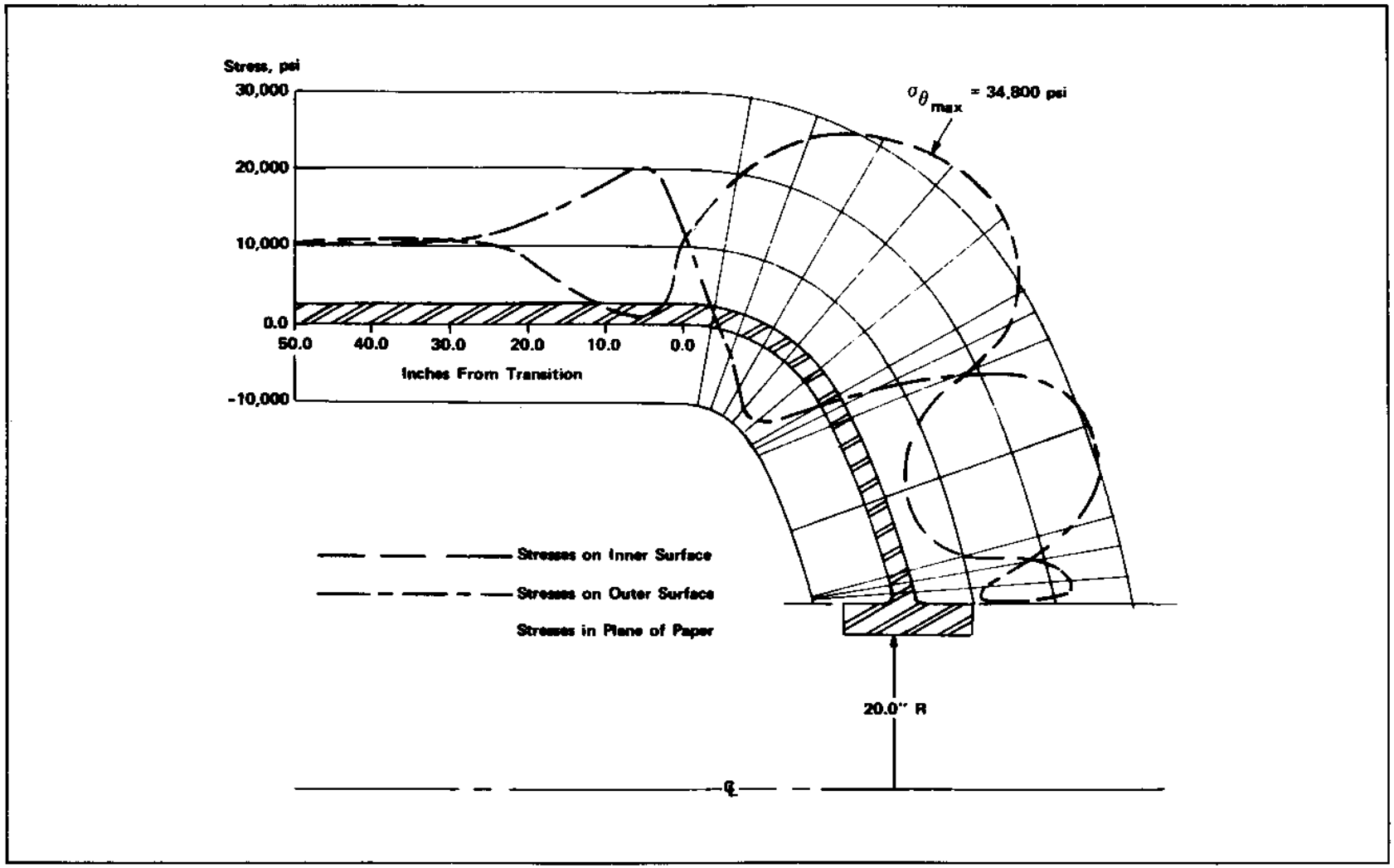

FIGURE 2-30
Meridional Stresses in Vessel at Hatch End

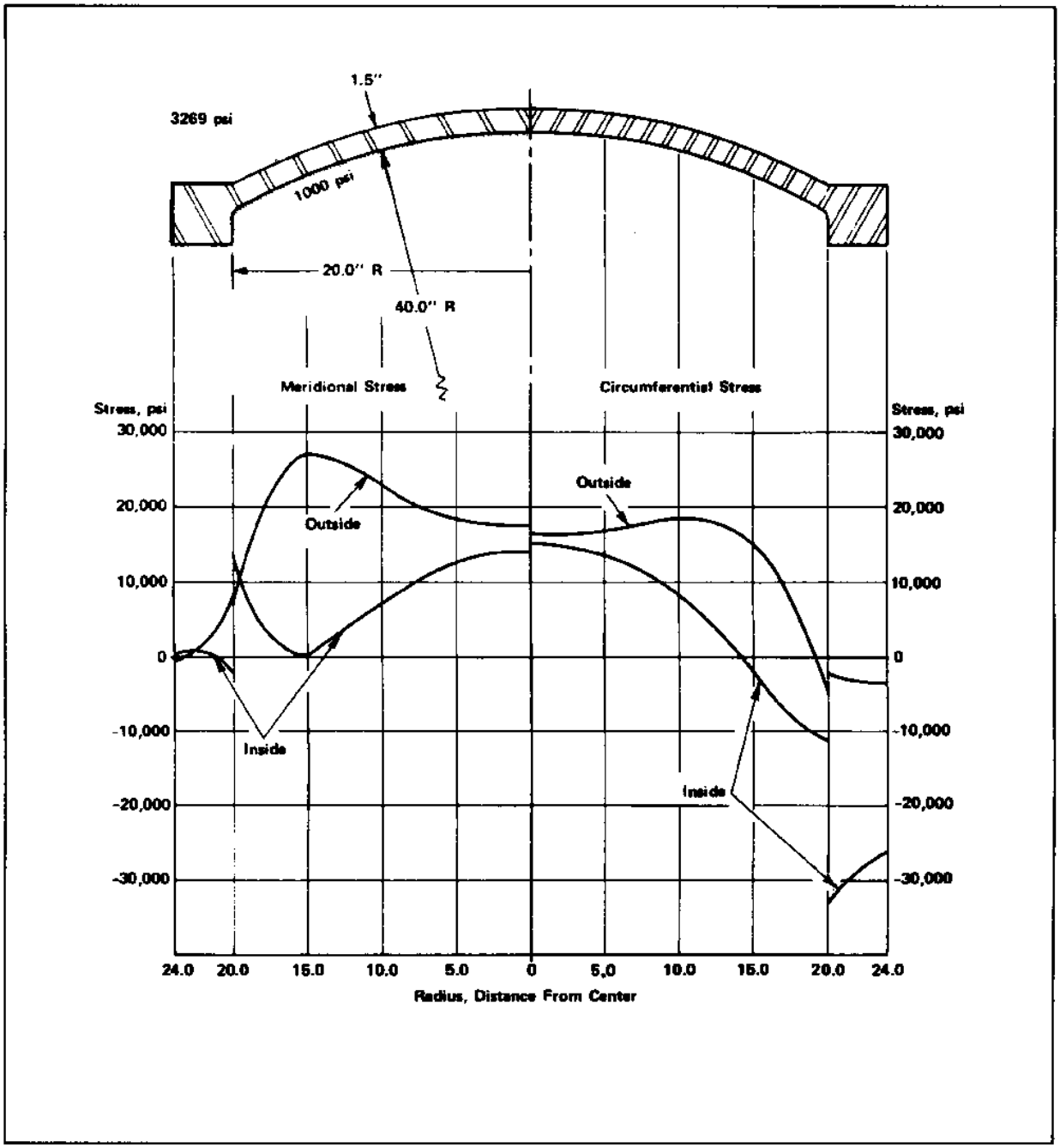

FIGURE 2-31
Computer Model and Stress Output for Hatch Cover

Though the viewport penetrations in the cylinder wall are, strictly speaking, fully three dimensional, nonsymmetric problems, and should be treated accordingly, an approximate method can be employed that renders conservative results. This method is possible because of the small ratio of the penetration diameter, d, to the mean diameter of the cylinder D, in this case 1:12.3. This method involves the use of an axisymmetric shell analysis which includes a Fourier series loading capability. Specifically, a flat circular annular plate of thickness equal to the cylinder wall thickness, with the inner radius equal to the penetration radius and reinforced as actually reinforced, with an outer radius of at least 10 times the inner radius, is subjected to an in-plane edge load, P([theta]) of

$$P([\theta]) = -\frac{3}{4}(ST) - \frac{1}{4}(ST)\cos 2[\theta]$$

S = the hoop stress found in an unpenetrated cylinder, away from any stress riser, psi

T = thickness of shell, away from reinforcement, inches

[theta] = angle from longitundinal plane.

To include the effect of the resultant pressure from the viewport itself, the penetration reinforcement as actually developed is modeled into the center of a hemispherical shell with twice the inner radius of the cylinder. The resultant pressure of the viewport is then applied as a pressure band over the actual area of contact. This three component model is shown in Figure 2-32. Fourier loading was used to analyze this approximate model. The hoop stresses in the vicinity of the penetration, for both the circumferential and longitudinal sections, [theta] = 90 and [theta] = 0 degrees are shown plotted in Figure 2-33. As can be seen, the stresses developed around the penetration decay quite rapidly along the shell.

The axial stress distribution was also developed but not plotted. The maximum stress condition is shown in this figure.

(5) Categorization of Stress. At this point the stresses should be broken into the stress categories, as fully defined in the previous example.

(6) Stress Intensities. As in the previous example, the stresses are now converted into stress intensities. We will consider only one point in the vessel (all other stress intensities are satisfactory). Examining Figures 2-29 and 2-30 we note that the maximum stress intensity in the tori-spheroidal head, on the inner surface is

$$S_{max} = |34{,}800 - (-9{,}800)| = 44{,}600 \text{ psi.}$$

Now in the knuckle (torus) of a tori-spheroidal head the stress must be categorized as a primary local membrane plus a secondary bending stress. Thus the stress intensity limit for this configuration is (see Figure 2-7)

$$P_L + P_b + Q \;/ = 3\, S_m = 69{,}600 \text{ psi}$$

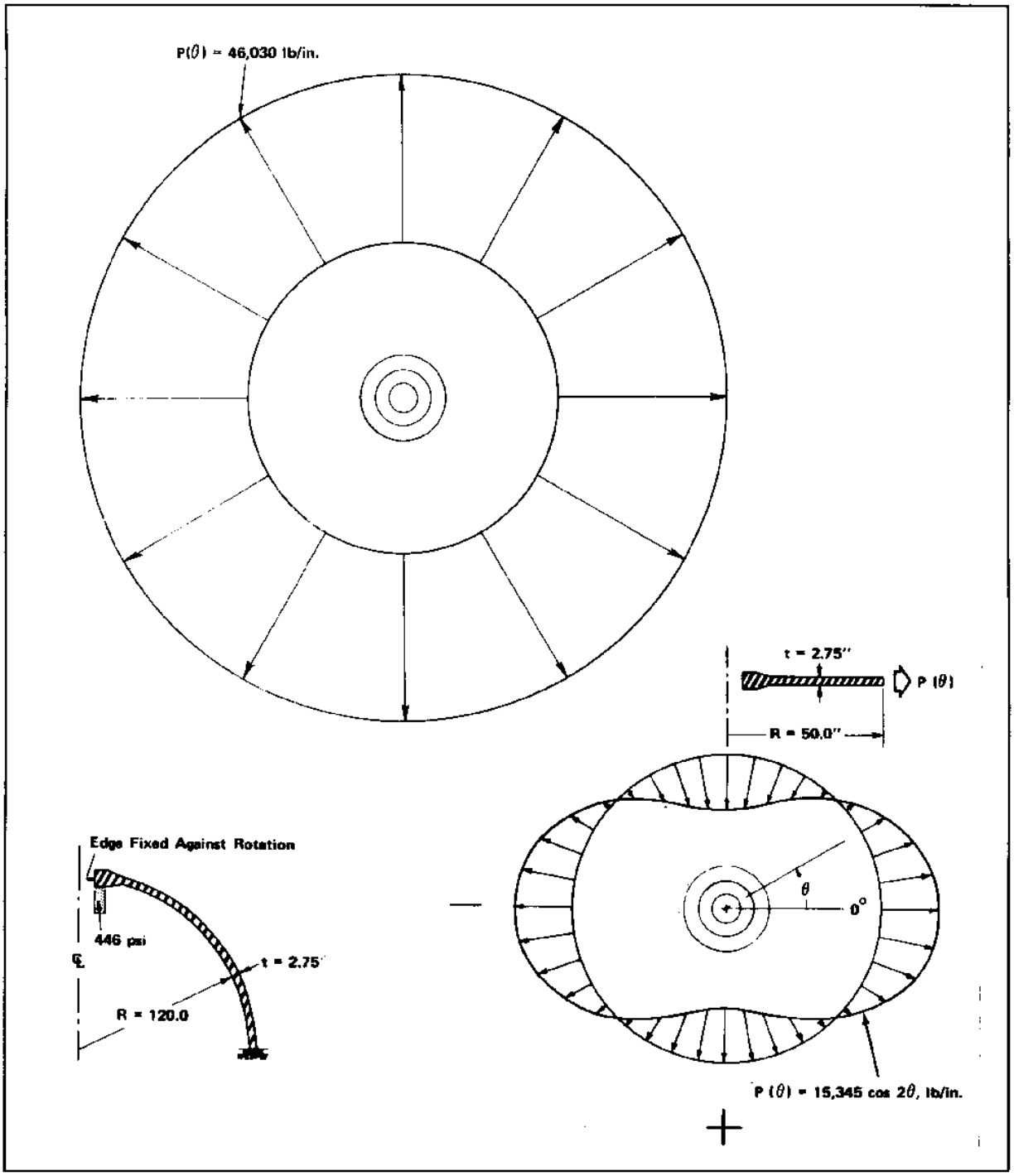

FIGURE 2-32
Three Component Model of Viewport Penetration in Cylinder for Input to Computer

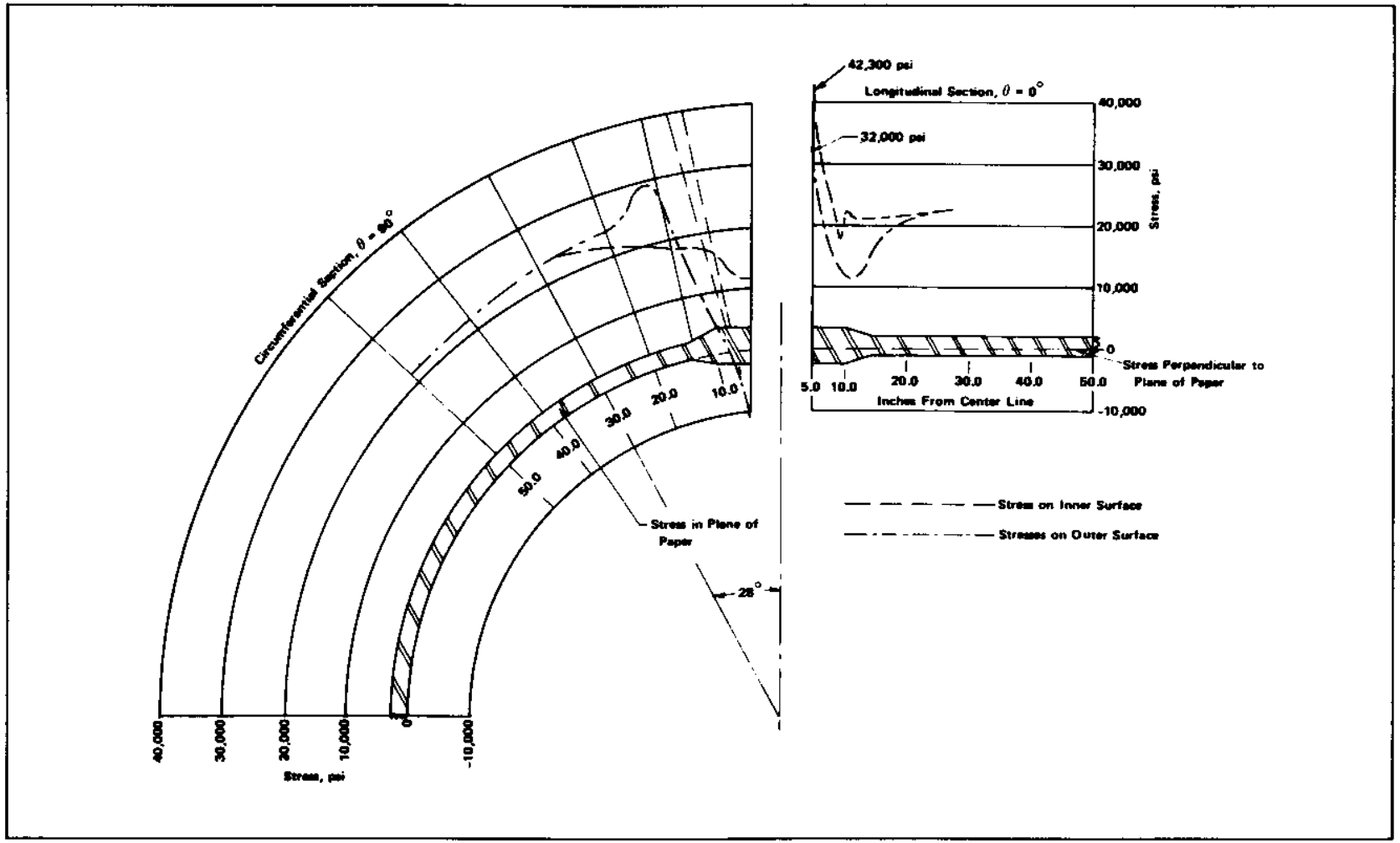

FIGURE 2-33
Hoop Stresses in Vicinity of Viewport Penetration in Cylinder

thus S_{max} < 69,600 psi and meets the code specified limits. The maximum stress intensities, P_m (or P_L) + P_b + Q + F, wherever calculable, meet the 2 S_a limit of being less than 74,000 psi. For the 5.0 inch nozzles the Stress Index Method may be used to determine the maximum stress intensity since the nozzle was designed as an "acceptable" configuration. From Paragraph 4-612 (b), the stress intensity at the inside corner of the nozzle in the longitudinal plane is 3.3 times the primary membrane stress intensity in the unpenetrated and unreinforced shell. For this shell, the primary membrane stress is calculated as

$$P_m = 22{,}318 + 0.5(1000) = 22{,}818 \text{ psi}$$

and

$$3.3\ P_m = 75.300 \text{ psi} > 2\ S_a = 74{,}000 \text{ psi}.$$

If no experimental verification is to be carried out and no other analytical means of determining the maximum stress in the nozzle is available, then the shell thickness should be increased slightly so as to reduce the 3.3 P_m value to 74,000 psi. It should be noted that this 3.3 value is conservative and that experimental verification should show that the maximum stress intensity in the nozzle is actually lower than 3.3 P_m.

REFERENCES

1. ASME Boiler and Pressure Vessel code, Section VIII, Divisions 1 and 2, 1980 Edition.

2. ANSI/ASME PVHO 1 Safety Standard for Pressure Vessels for Human Occupancy.

3. Pellini, W.S., Evolution of Engineering Principles for Fracture-Safe Design of Steel Structures, NRL Report 6957, Naval Research Laboratory, Washington, D.C., September 23, 1969.

4. Pellini, W.S., and Puzak, P.P., Fracture Analysis Diagram Procedures for the Fracture-Safe Engineering Design of Steel Structures, NRL Report NRLRA, March 15, 1963; also Welding Research Council Bulletin, WRCBA, Series No. 88, May 1963.

5. Pellini, W.S., and Puzak, P.P., Practical Considerations in Applying Laboratory Fracture Test Criteria to the Fracture-Safe Design of Pressure Vessels, NRL Report 6030, NRLRA, November 5, 1963; also Transactions, Am. Soc. Mechanical Engrs., Series A., Journal of Engineering for Power, JEPOA, October 1964, pp. 429-443.

6. Timoshenko, S., and Woinowsky-Krieger, S., Theory of Plates and Shells, Second Edition, McGraw-Hill Book Co., New York, 1959.

7. Flugge, W., Stresses in Shells, Springer-Verlag New York, Inc., 1966.

8. Novozhilov, V.V., Thin Shell Theory, P. Noordhoof Ltd., Groningen, The Netherlands, 1964.

9. Kraus, H., Thin Elastic Shells, John Wiley & Sons, Inc., New York, 1967.

10. Baker, E.H., Cappelli, A.P., Kovalevsky, L., Rush, F.L., and Verette, R.M., Shell Analysis Manual, NASA Contractor Report NASA CR-012, NASA, Washington, D.C., April 1968.

11. Use of the Computer in Pressure Vessel Analysis, Papers and Discussions from ASME Computer Seminar, Dallas, Texas, September 26, 1968, The ASME.

12. Rashid, Y.R., On Computational Methods in Solid Mechanics and Stress Analysis, Proceedings of the Conference on the Effective Use of Computers in the Nuclear Industry, Knoxville, Tennessee, April 1969.

13. Corum, J.M. and Krishnamurthy, N., A Three Dimensional Finite Element Analysis of a Prestressed Concrete Reactor Vessel Model, Proceedings of the Symposium on Application of Finite Element Methods in Engineering, ASCE, held at Vanderbilt University, November 1969.

14. Gallagher, R.H., Large Scale Computer Programs for Structural Analysis, On General Purpose Finite Element Computer Programs, Proceedings of a Symposium at the Winter Annual Meeting of the ASME, November 1970.

15. Hartung, R.F., An Assessment of Current Capability for Computer Analysis of Shell Programs, Technical Report AFFDL-TR-71-54, Air -Force Flight Dynamics Laboratory, Wright-Patterson Air Force Base, Ohio, April 1971.

16. Jessop, H.T., and Harris, F.C., Photoelasticity, Principles & Methods, Dover Publications, Inc., New York, 1960.

17. Durelli, A.J., Phillips, E.A., TSAO, C.H., Introduction to the Theoretical and Experimental Analysis of Stress and Strain, Mcgraw-Hill Book Company, Inc., New York, 1958.

18. Lee, G.H., An Introduction to Experimental Stress Analysis, John Wiley & Sons, Inc., 1958.

19. Hetenyi, M., Handbook of Experimental Stress Analysis, John Wiley & Sons, Inc., 1950.

20. Perry, C.C., and Lisner, H.R., The Strain Gage Primer, Mcgraw-Hill Book Co., Inc., New York.

21. Holister, G.S., Experimental Stress Analysis, Principles and Methods, Cambridge University Press.

22. Dally, J.W., and Riley, W.F., Experimental Stress Analysis, Mcgraw-Hill Book Co., Inc., New York.

23. Durelli, A.J., Applied Stress Analysis, Prentice-Hall, Inc.

24. Roark, R.J., Formulas for Stress ad Strain, Mcgraw-Hill Book Company, New York, Fourth Edition, 1965, page 352.

25. Peterson, R.E., Stress Concentration Design Factors, John Wiley & Sons, Inc., New York, 1966.

26. Zick, L.P., Stresses in Large Horizontal Cylindrical Pressure Vessels on Two Saddle Supports, The Welding Journal Research Supplement, September 1951; republished with revisions and corrections in Reference (1.46).

27. Esztergar, E.P., and Kraus, H., Analysis and Design of Ellipsoidal Pressure Vessel Heads, Transactions of the ASME, Journal for Industry, 1970; reprinted in Reference (1.46).

28. Adachi, J., and Benicek, M., Buckling of Tori-spherical Shells Under Internal Pressure, Experimental Mechanics, 1964; reprinted in Reference 1.46).

29. Thurston, G.A., and Holston, A.A., Jr., Buckling of Cylindrical Shell End Closures, NASA Report CR-540, 1966; reprinted in Reference (1.46).

CHAPTER 3. APPURTENANCES

1. SCOPE. This chapter presents design criteria for appurtenances applicable to hyperbaric facilities. An appurtenance is defined here as any accessory structure which directly affects the integrity of a hyperbaric pressure vessel. Major categories of appurtenances include viewports, doors, and closures.

Section 1. VIEWPORTS

1. VIEWPORTS. This section provides general design guidance for viewports their configuration, material, fabrication techniques, and certification requirements. References are provided as further assistance to the designer. The information in this section conforms to the standards established by ANSI/ASME PVHO 1, Safety Standards for Pressure Vessels for Human Occupancy (Reference 1).

2. BASIC VIEWPORT TYPES. The viewport configurations which have received the major share of practical development are the flat plate and the conical frustum. Additional laboratory research has been done on spherical shell ports, which have advantages in applications requiring a wide field of view. Viewport parts are the window, seat, supporting flange, bezel and seals.

a. Flat Plate. The flat plate viewport offers several advantages. It is easy to fabricate, lends itself to sealing with pressure on either side (two-way window), and has good structural characteristics. Its primary disadvantage, by comparison with conical or spherical shell ports, is that tensile stresses (which increase sensitivity to surface stress risers) can develop on the low pressure face. An example of the flat plate viewport is shown in Figure 3-1.

b. Conical Frustum. The conical window, designed to be pressurized on its larger face and supported by a conical flange, develops a natural sealing and wedging action (Figure 3-2). This characteristic is useful in high-pressure applications, since a predominantly compressive stress field is generated. A cone angle of 90 deg. (included) has been found to be a good compromise between the tendency to extrude at small cone angles and the rapid loss of viewing area with increasing thickness of large cone angles. the conical window is more difficult to fabricate than a flat plate, but easier than a spherical shell. When plastic is used, conical windows can be latheturned.

c. Other configurations are possible for viewport windows and many variations have been used for the supporting flanges, retaining rings and seals. Examples of other viewport geometries are shown in Figures 3-3 through 3-6.

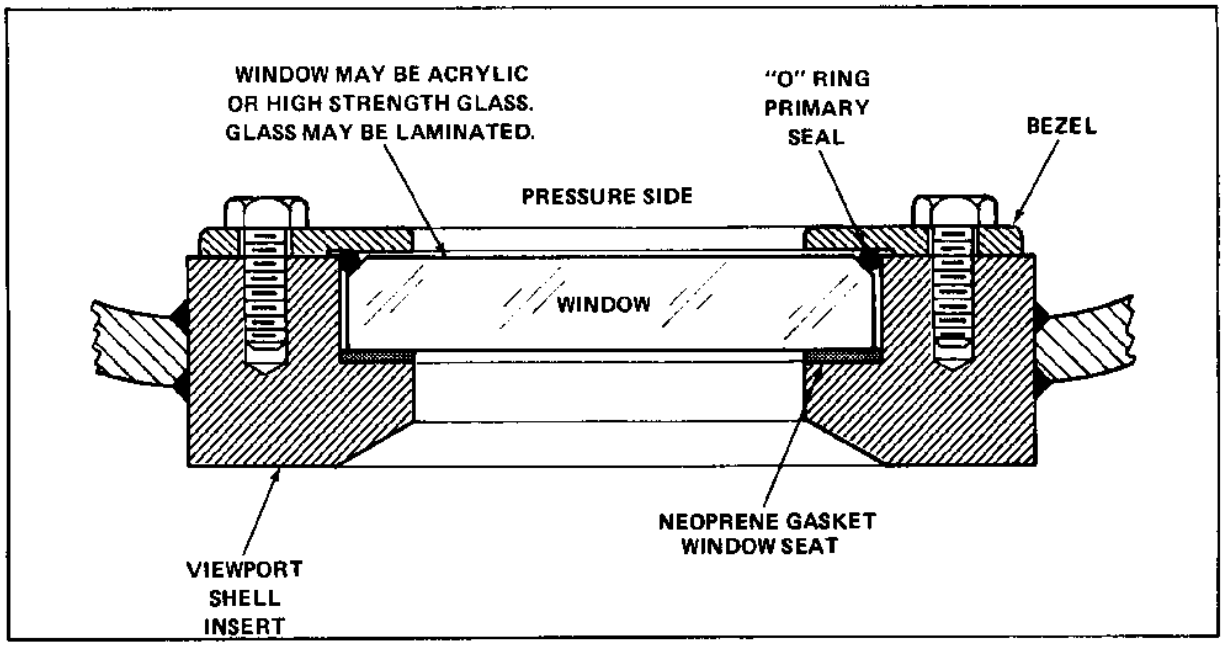

FIGURE 3-1
Flat Plate Viewport

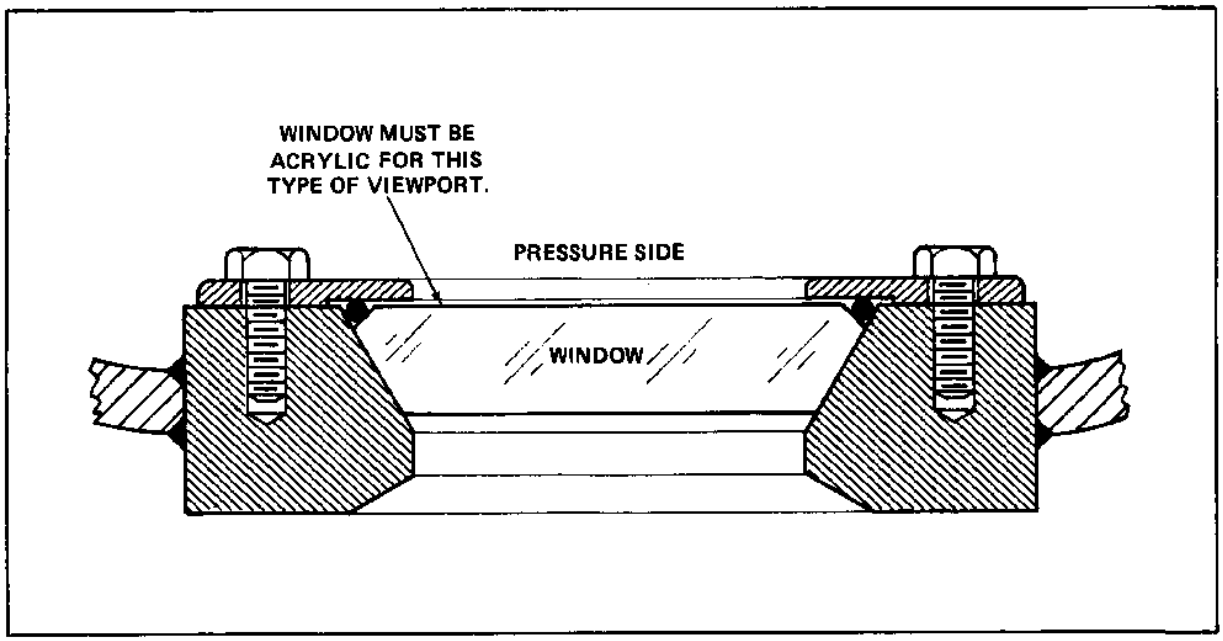

FIGURE 3-2
Single Conical Frustum Viewport

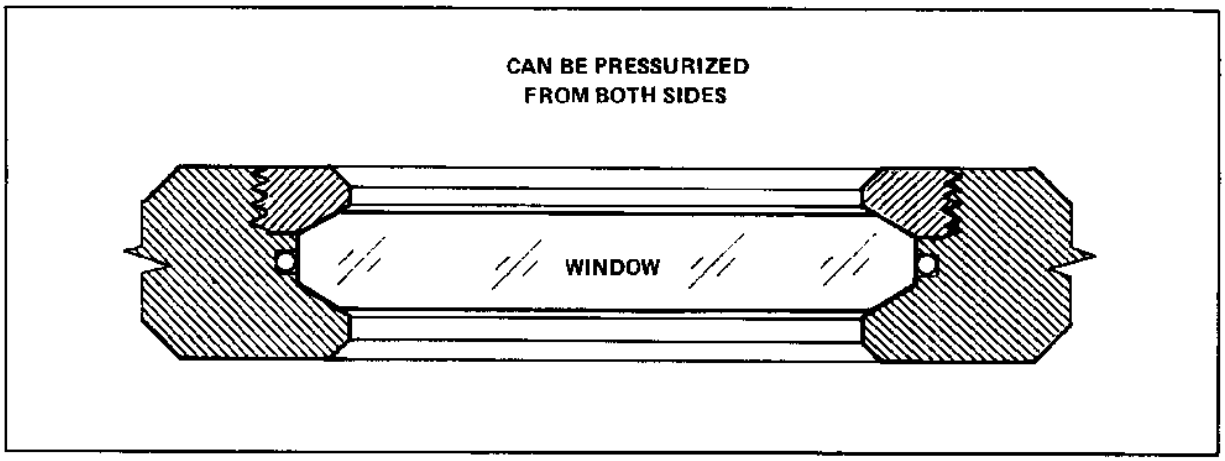

FIGURE 3-3
Double Conical Frustum Window

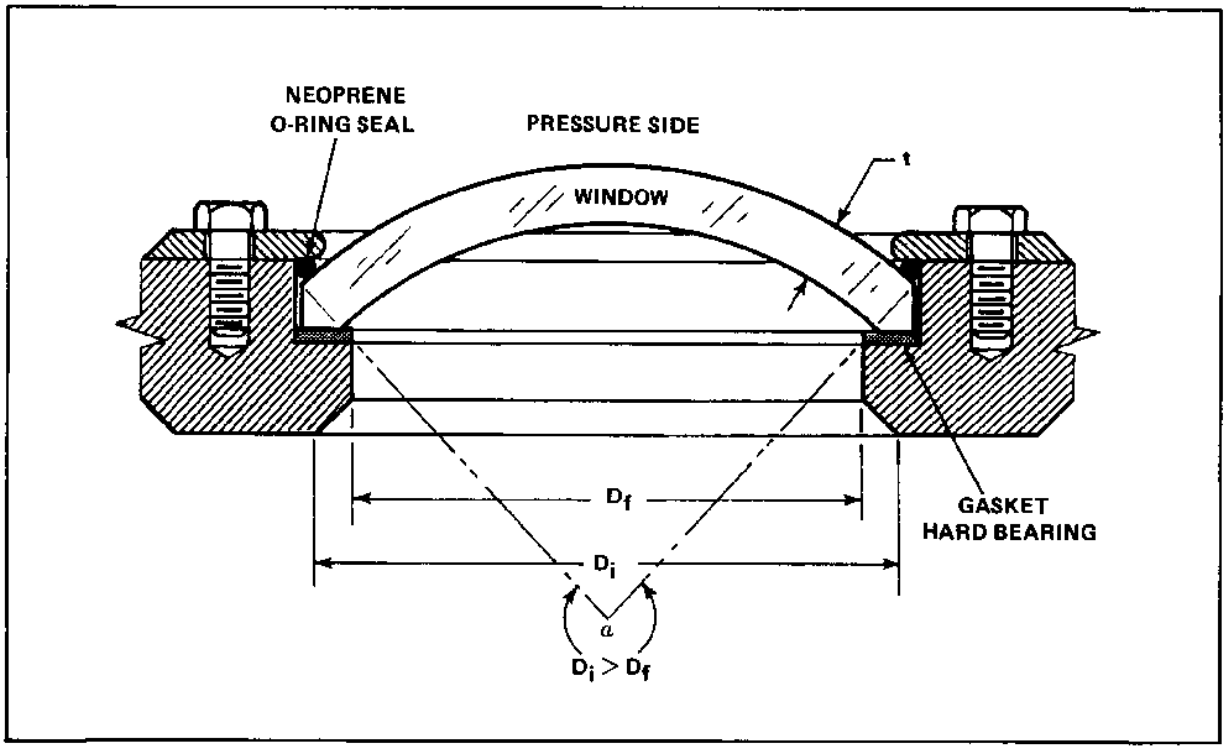

FIGURE 3-4
Spherical Segment Window

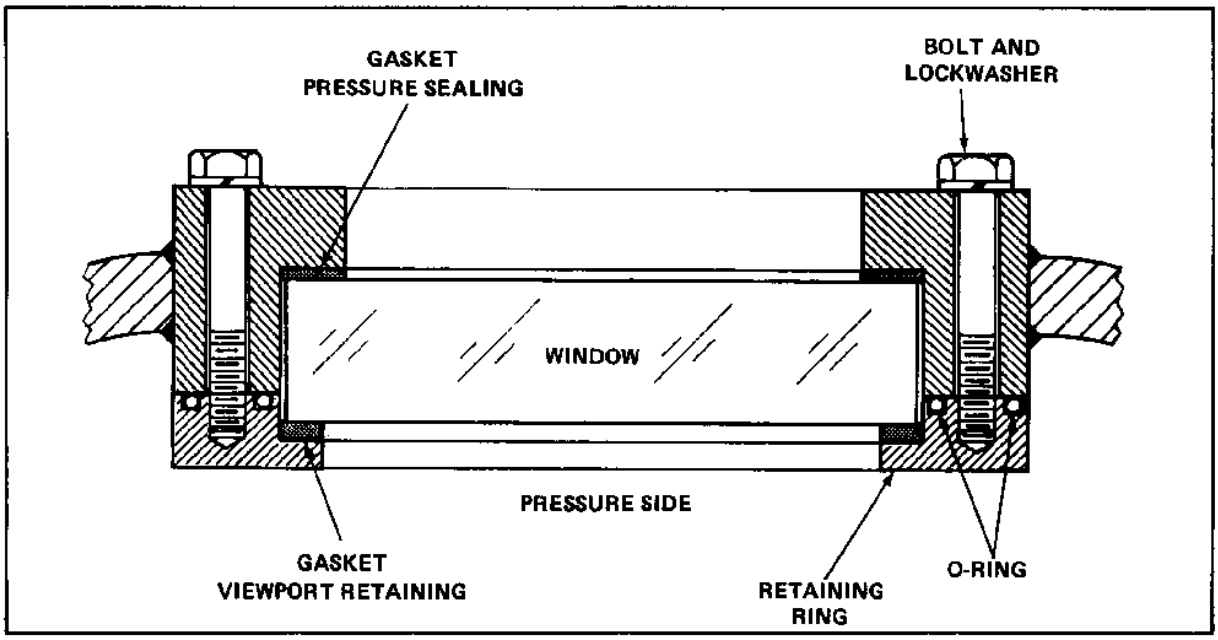

FIGURE 3-5
Flat Window Pressure Sealing With Exterior Bolting

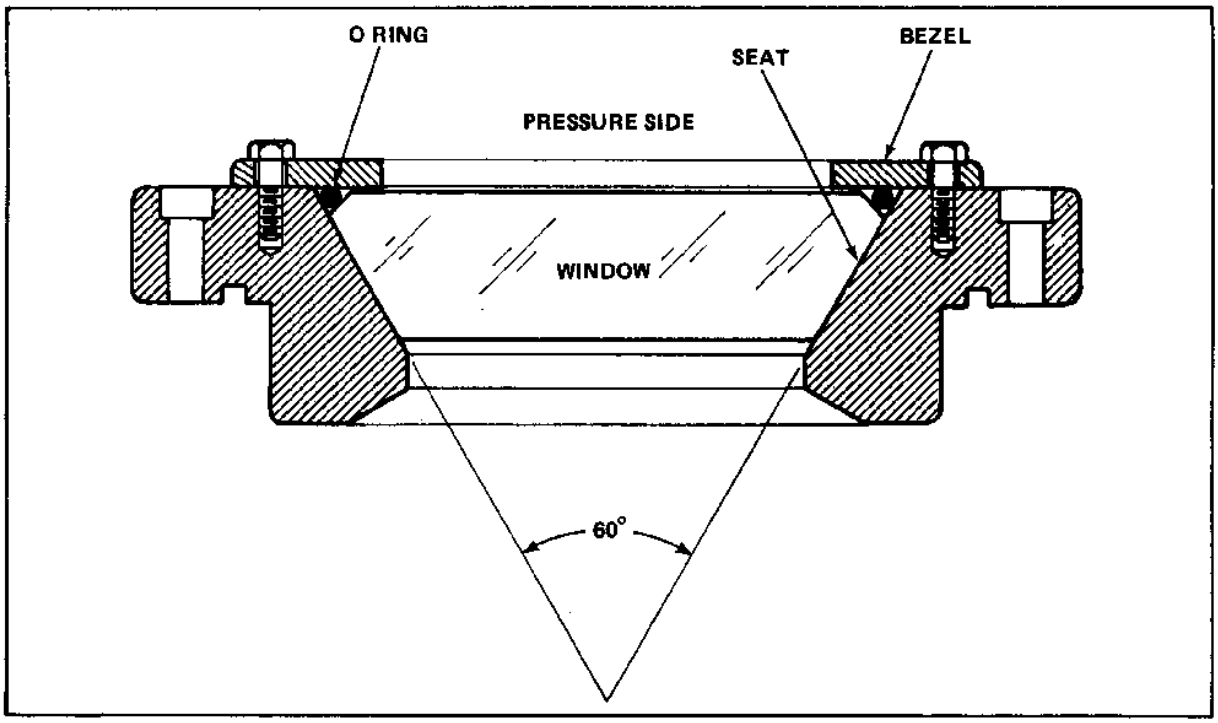

FIGURE 3-6
NSRDL Hyperbaric Chamber Port

3. MATERIAL SELECTION.

a. Glass in the form of flat discs is suitable for use in hyperbaric pressure vessels, The material should be tempered soda lime glass for maximum strength and/or Pyrex for corrosion resistance. To avoid catastrophic failure modes, glass windows are usually laminated of two or more discs. Only glass windows of known performance should be used in hyperbaric pressure vessels. Windows of this type are available from commercial suppliers for pressures to 600 psi and temperatures up to 500 deg. F. Typical glass windows are shown at Figure 3-7.

b. Acrylic plastics are alternatives to glass in pressure-resisting windows (See Reference 2, Stachiw, Critical Pressures of Conical Acrylic Windows 1967). The material properties of acrylics are well defined. Acrylics do not exhibit catastrophic failure modes and prior to reaching the failure point there are obvious indications of the impending failure. In this subsection, design information is given on the selection and fabrication of acrylics for hyperbaric chamber viewports.

c. Other materials such as Lexan may be used if their physical properties have been well established and their performance has been verified by tests.

4. SEALING METHODS. Sealing a viewport against leakage involves consideration of both the window and the supporting flange. With clean, properly fitted mating surfaces of moderate smoothness, an acrylic viewport will develop a pressure-energized seal simply by the application of silicone grease to the mating surfaces. However, grease can channel with time, and conservative design requires the addition of deformable seals for increased reliability and more evenly distributed sealing loads.

a. Seal Types. Both O-ring and gasket seals have been successfully applied in viewport designs (Figures 3-1 through 3-6). Neoprene is usually used for gaskets and seals. In general, gasket configurations are not critical; however, reasonably thick sections prevent unloading due to window deflection, and compliant materials distribute loads more uniformly. Conventional gaskets are usually 1/8 inch thick but thickness should be varied to suit the application. Cork may also be used for gaskets.

b. Sealing Techniques. O-rings or gaskets can be used to seal the windows depending upon the configuration of the window.

(1) Flat disc viewports (Figure 3-1) may be sealed by gaskets or a combination of O-rings and gaskets. If the O-rings are used, the groove should be sized to produce about 20 percent compression.

(2) Conical frustum windows (Figures 3-2, 3-3, and 3-6) do not lend themselves as readily as flat plates to the use of gaskets for primary sealing. However, an O-ring in a groove located as close as possible to the high pressure side can provide a satisfactory seal. A gasket placed under the retainer ring on the high-pressure (large diameter) face will provide O-ring preload.

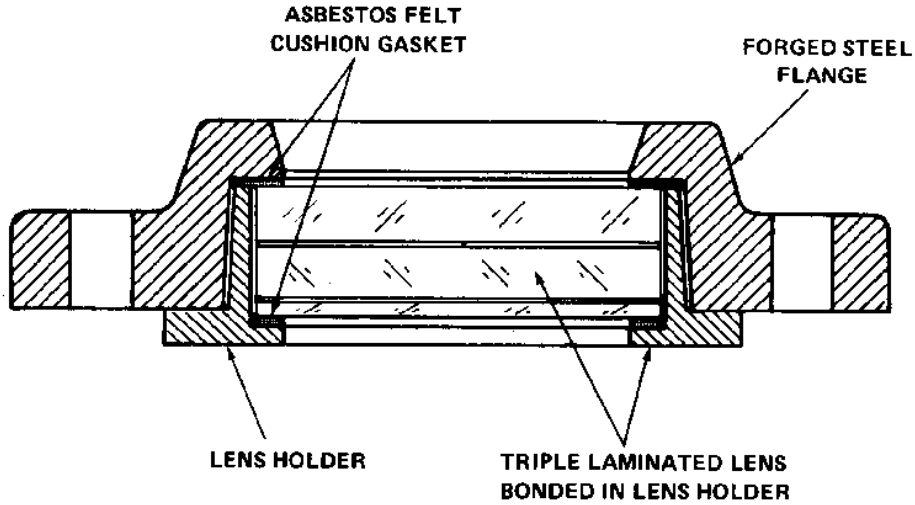

COURTESY CYCLOPS INDUSTRIES

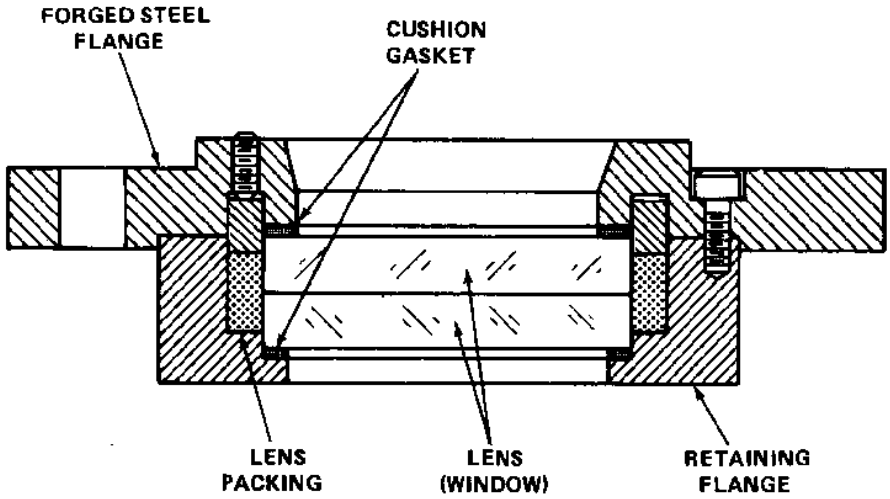

COURTESY PRESSURE PRODUCTS COMPANY

FIGURE 3-7
Commercially Available Glass Windows

5. FIELD OF VIEW CONSIDERATIONS. Hyperbaric chamber viewports are restrictive to both area and viewing angle. This subsection presents a simplified approach to treatment of viewing angles for the designer. The examples given are simple graphical techniques for handling field-of-view problems. The techniques may be extended to three-dimensional form with additional variables at the designer's option.

a. Refractive Index. The refraction of light in thick windows viewed at close range can produce noticeable distortion due to refraction. An example of the effect is shown in Figure 3-8. A ray passing through a 2-inch thick acrylic window at a 30 deg. angle is deviated about 3/8 inch. The effect is governed by Snell's Law, as given in the figure. The deflection will be parallel provided the refractive indexes of the fluids on both sides of the window are equal. Since the conditions governing refraction vary with the gas in the chamber, and since the effect is generally not large enough to seriously affect rough estimates of viewport size requirements, the simplified field of view diagrams given here assume undeviated line-of-sight.

b. Effective Limiting Aperture. Every viewport design will contain an aperture which restricts the field of view more than any other part of the viewport structure when sighted from a point on the central perpendicular to the window. As illustrated in Figure 3-9, the location of the limiting aperture may be on the near side, far side, or within the window structure. It may also change location depending on the viewing distance chosen, and whether viewing is from inside or outside the chamber.

c. Monocular and Binocular Fields. Most observing through viewports is done by personnel at close range, using both eyes. This results in a compound field of view in the horizontal plane. The compound field consists of a central binocular portion bounded by two monocular segments. The observer has full stereoscopic vision only in the binocular portion. The monocular segments cannot be viewed as comfortably, and depth perception is possible only by indirect clues. The observer can, of course, shift the binocular field by moving his head, but this involves a loss of stereoscopic coverage elsewhere.

(1) Horizontal Plane. Figure 3-10 illustrates the determination of projections of the monocular and binocular fields in the horizontal plane for a given window aperture and viewing distance. Such diagrams can be drawn to scale using a typical eye separation of about 2-1/2 inches.

6. DESIGN OF ACRYLIC WINDOWS. The design of safe acrylic windows for hyperbaric chambers has progressed to the point where tested procedures are available (see Reference 2, Stachiw, Critical Pressure of Conical Acrylic Windows, 1967). The recommended procedures are based on experimental data giving catastrophic failure pressures under rapidly applied hydrostatic loading as a function of thickness to diameter ratio. As a result of further experiments with sustained loading at elevated temperatures, and through the use of extrapolation techniques, conversion factors or multipliers have been determined to allow adjustment of short-term failure data to more realistic conditions. The recommended methods are very conservative in that individual proof tests are specified for multipliers less than 10 or 12. Acrylic windows must be designed per Reference 1 (ANSI/ASME PVHO 1, Appendix A, Design of Viewports) and are briefly described in the following paragraphs.

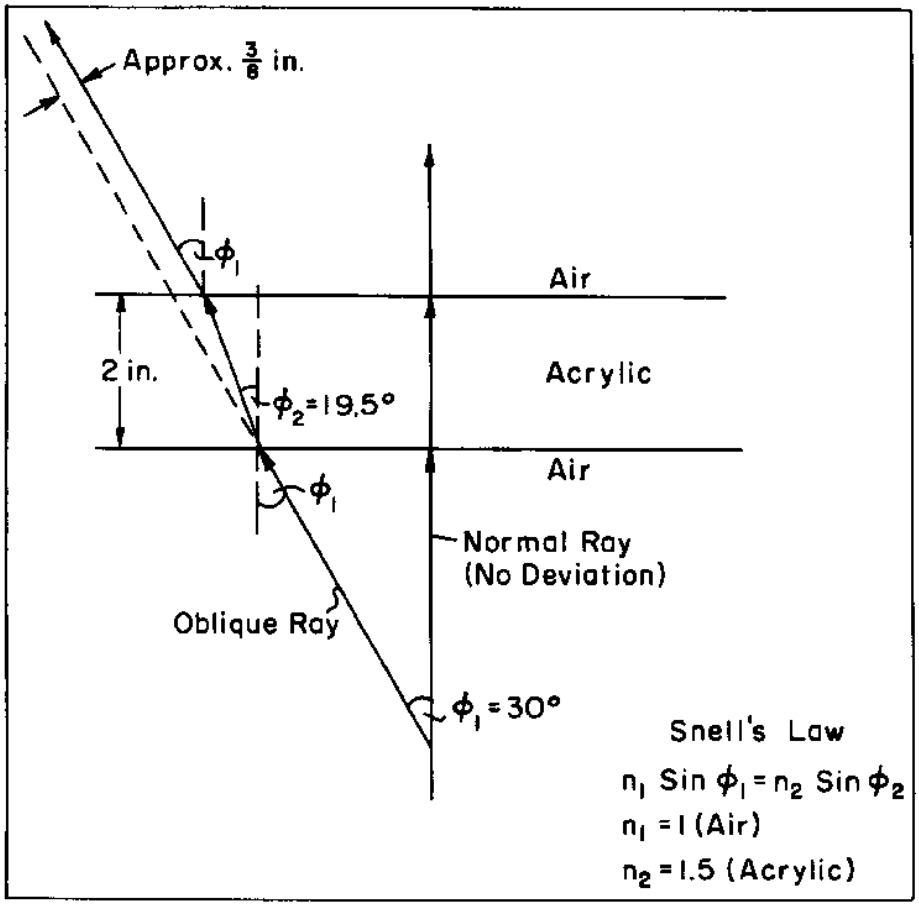

FIGURE 3-8
Refractive Effect of Flat Window

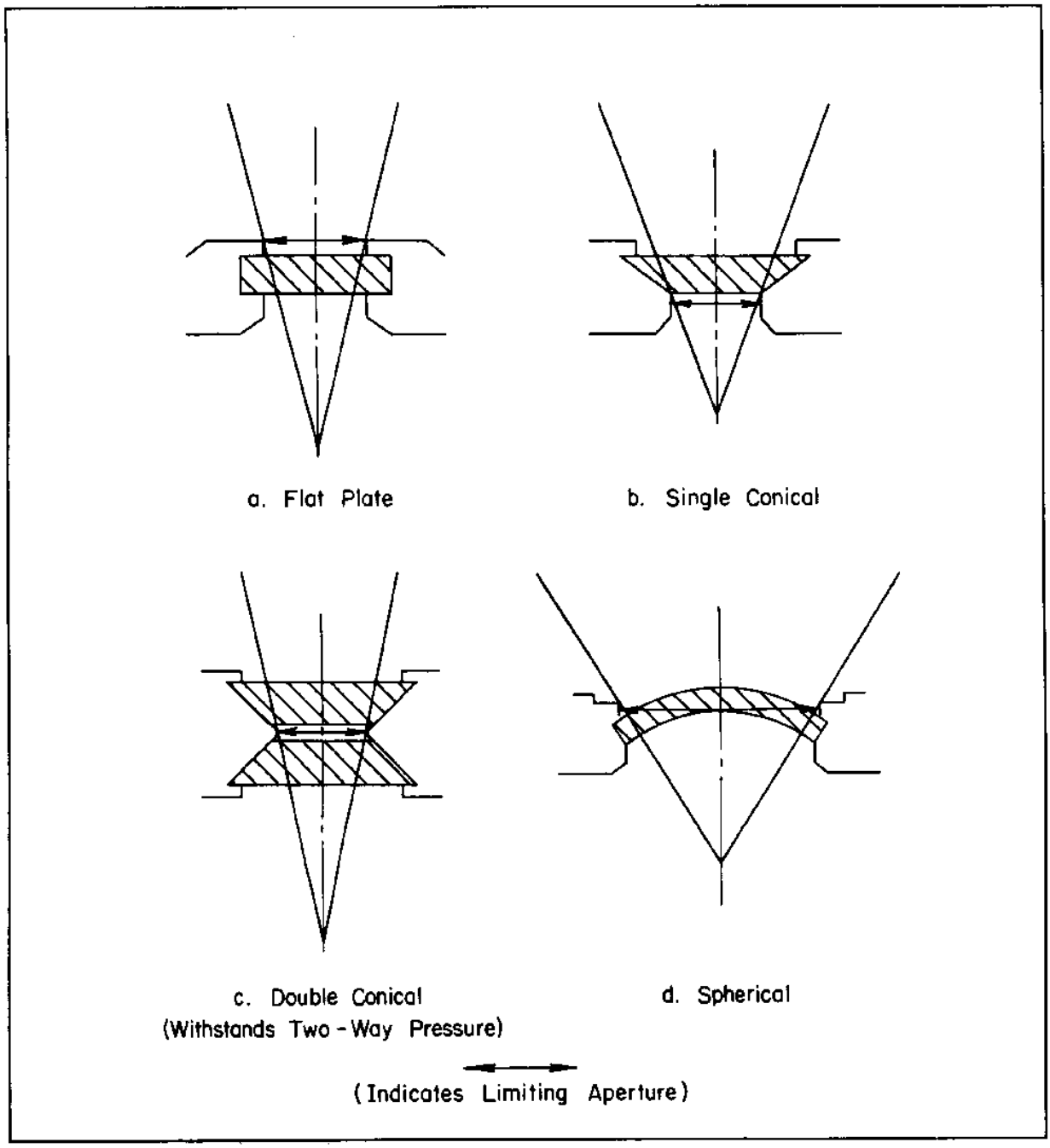

FIGURE 3-9
Limiting Aperture Locations on Various Viewport Configurations

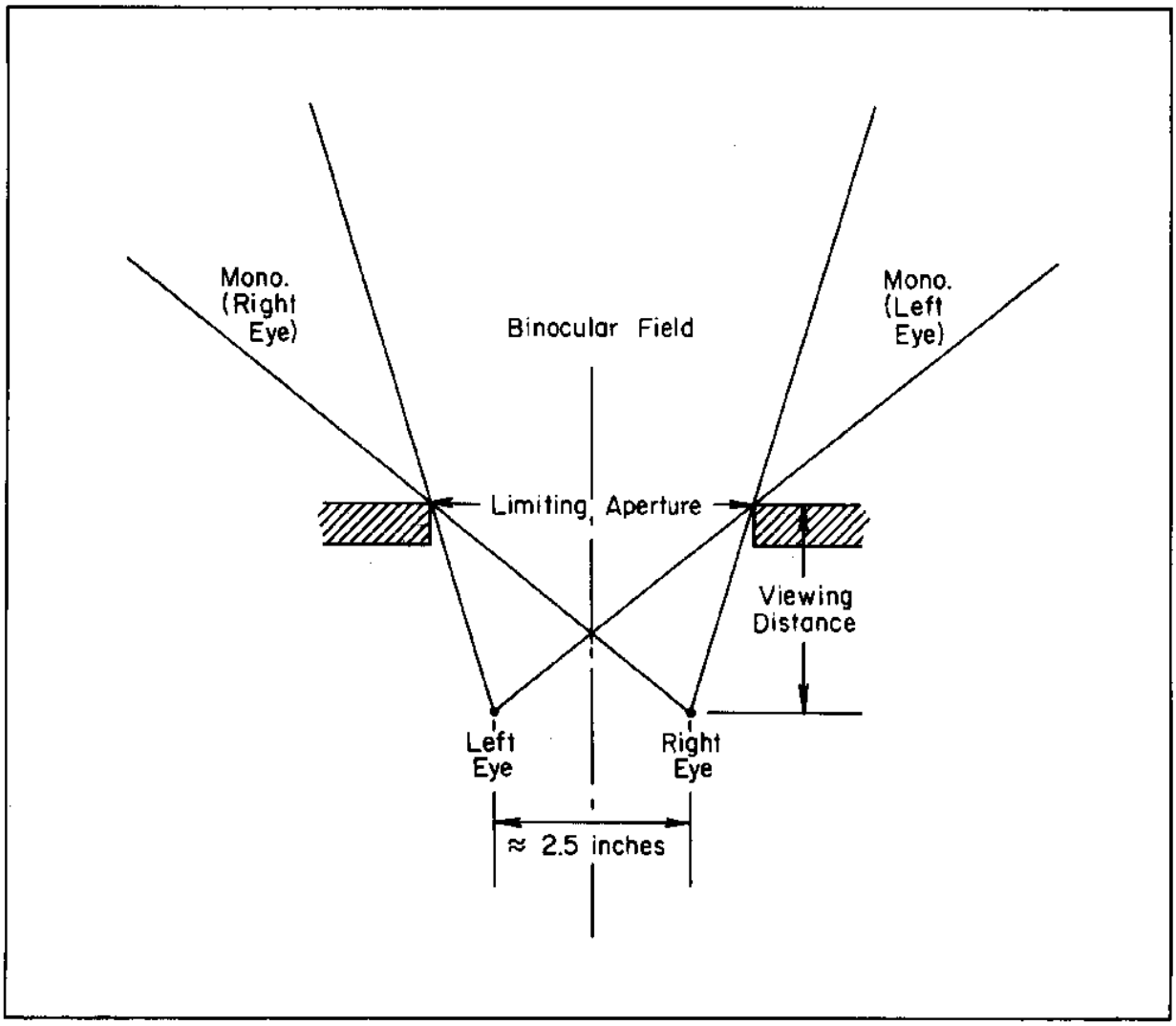

FIGURE 3-10
Graphical Determination of Monocular and Binocular Viewing Fields in the Horizontal Plane

a. Physical Properties. The physical and mechanical properties for acrylic plastic are given in Table 3-1. The type of acrylic generally chosen for pressurized windows is the utility grade, defined by Federal Specifications L-P-391B. If the acrylic plastic is not certified by the manufacturer as having the typical physical properties in Table 3-1, the castings must have the minimum physical properties in Table 3-2 as determined by acceptance tests by the manufacturer or an independent materials testing laboratory with certified test results furnished by the fabricator to the user.

(1) Construction. Acrylic windows must be made from monolithic cast material. Commercial acrylic plate is available up to 4 inches thick and special shapes can be cast to order.

(2) Forming. Machining is best performed with sharp tools and slow feed at high surface speed. A water-base coolant is helpful.

(3) Annealing. Annealing will remove residual stresses after machining or sawing. Manufacturer’s instructions should be followed. Dimensional changes may occur during annealing.

(4) Surface Finish. It has been found that a 32- to-64 rms finish on sealing and bearing surfaces of the window seat is satisfactory. The viewing surfaces, if machined, must be polished. Annealing should follow final machining and polishing.

b. Fabrication Certification. The window fabricator must certify that only approved methods and materials were used for all forming, machining, polishing, heat treatment and inspection processes.

c. Design Certification. The window designer must certify compliance of the window design with the requirements of ANSI/ASME PVHO 1 (Reference I) and include engineering calculations and/or a description of the experimental method and data used to verify compliance.

d. Pressure Testing Certification. The window supplier or an approved testing laboratory must certify the results of the window pressure test and include pressure, temperature, pressurization rate, duration of sustained loading and viewport flange used.

e. Identification. Identification of each window must be on the window seating surface in letters and numbers 0.125 inch (3.2 mm) high with an indelible felt marker through a paper stencil. The identification must contain the information as shown in the following example.

Table 3-1
Specified Values of Physical Properties for Each Lot
(To be certified by the manufacturer of material)

Test Procedures ASTM	Physical Property	Minimum Values Engineering Units	Metric Units
D256*	Izod matched impact strength	> / = 0.25 ft-lb/ in.-min.	> / = 13.3 J/m
D542*	Refractive Index	1.49 +/- 0.01	1.49 +/- 0.01>
D570*	Water absorption, 24 hr.	< / = 0.25%	< / = 0.25%
D621	Compressive deformation, 4000 psi, 122 F	< / = 0.85%	< / = 0.85%
D638*	Tensile		
	(a) Ultimate strength	> / = 9000 psi	> / = 62 MPa
	(b) Elongation at break	> / = 2%	> / = 2%
	(c) Modulus	> / = 400,000 psi	> / = 2760 MPa
D695*	Compressive, yield strength	> / = 15,000 psi	> / = 103 MPa
	Modulus	> / = 400,000 psi	> / = 2760 MPa
D732*	Shear, ultimate strength	> / = 8,000 psi	> / = 55 MPa
D785*	Rockwell hardness	> / = M scale 90	> / = M scale 90
D790*	Flexural, ultimate strength	> / = 14,000 psi	> / = 97 MPa
D792*	Specific gravity	1.19 +/- 0.01	1.19 +/- 0.01
E308	Ultraviolet (290-330 nm) light transmittance	< / = 5%	< / = 5%
D702	Clarity, visually rated	Must have readibility	
D696	Coefficient of linear thermal expansion at	10 └ -5┘ in./in. deg. F	10 └ -3┘ mm/mm deg. C
	+60	4.0	1.83
	+80	4.3	1.96
	+100	4.7	2.15
D648	Deflection temperature of plastics under flexure	> / = 200 deg. F	> / = 93 deg. C
Method B.5	Residual monomer:		
	(a) methyl methacrylate	< / = 1.5%	< / = 1.5%
	(b) ethyl acrylate	< / = 0.01%	< / = 0.01%

Note 1. Tests marked with an (*) require testing of a minimum of two specimens. For others, test a minimum of one specimen. Where applicable use the sampling procedures described in B.4. For other tests use the sampling

procedures described in the appropriate ASTM test methods.

2. Where two specimens are required in the test procedure, the average of

the test values will be used to meet the requirements of the minimum physical properties of Table A-1.

3. MPa is the Metric Unit of pressure Megapascal, equal to 145 psi.

Based on Table A-1 of ANSI/ASME PVHO-1 (1).

Table 3-2
Specified Values of Physical Properties for Each Casting
(To be verified by the testing of specimen from each casting or lot as defined in Chapter B.2 of reference 1).

Test Procedures ASTM	Physical Property	Minimum Values Engineering Units	Metric Units
D638*	Tensile ultimate strength	> / = 62 MPa	> / = 9,000 psi
	elongation at break	> / = 2%	> / = 2%
	modulus of elasticity	> / = 2760 MPa	> / = 400,000 psi
D695*	Compressive yield strength	> / = 103 MPa	> / = 15,000 psi
	modulus of elasticity	> / = 2760 MPa	> / = 400,000 psi
D621*	Compressive deformation at 4000 psi and 122 deg. F	> / = 1%	> / = 1%
E308	Ultraviolet transmittance (for 0.5 inch thickness	> / = 5%	> / = 5%
D702	Visual Clarity	Must pass Readibility test	Must pass Readibility test
Method B.5	Residual methyl methacrylate monomer	< / = 1.5%	< / = 1.5%
Method B.5	Residual ethyl acrylate monomer	< / = 0.01 percent	< / = 0.01 percent

Note 1. Tests marked with an (*) require testing of a minimum of two specimens. For others, test a minimum of one specimen.

2. Where two specimens are required in the test procedure, the average of the test values will be used to meet the requirements of the minimum physical properties shown in this table based on table A-2 of ANSI/ASME PVHO-1 (1).

```
150- 100- PVHO-  RT-  21- 75
|    |      |     |    |   |
|    |      |     |    |   └──────────────────────────── Year of fabrication
|    |      |     |    |
|    |      |     |    └──────────────────── Fabricator's window serial number
|    |      |     |
|    |      |     └────────────── Fabricator's name or identification symbol
|    |      |
|    |      └──────────────────────────── Pressure Vessel for Human Occupancy
|    |
|    └──────────────────────────────────────────── Maximum temperature, deg. F
|
└──────────────────────────────────────────────────────── Design pressure, psig
```

7. WINDOW DESIGN. The acrylic plastic windows in pressure vessels for human occupancy should have one of the standard geometries shown in Figure 3-11. Minimum acceptable thickness and slenderness ratios should comply with the requirements of Figure 3-11 for the specific window geometry. Laminating several sheets of acrylic plastic to arrive at the desired window thickness is not permitted.

a. Joining of acrylic plastic castings by bonding is acceptable providing that:

(1) The joint should see in service only membrane compressive stresses.

(2) The tensile strength of the bond should be at least 50 percent of the parent material strength as established by ASTM-D-638 test on 5 tensile coupons cut from a bond quality control specimen that was bonded at the same time and in the same manner as the acrylic castings intended for actual service.

(3) The total cross sectional area of inclusions, plus voids, should be less than 5 percent of the total bonded joint cross section and less than 10 percent of the bonded joint cross section in any 1 inch (25 mm) length of the joint.

(4) The joint must be pressure tight during hydrostatic testing of the window.

b. Windows of other geometries may be proposed for use in pressure vessels for human occupancy providing that the experimental and analytical data substantiating the new window design parameters are submitted for review and are accepted by the ASME Safety Codes Committee on Pressure Vessels for Human Occupancy, or the NAVFAC System Certification Authority.

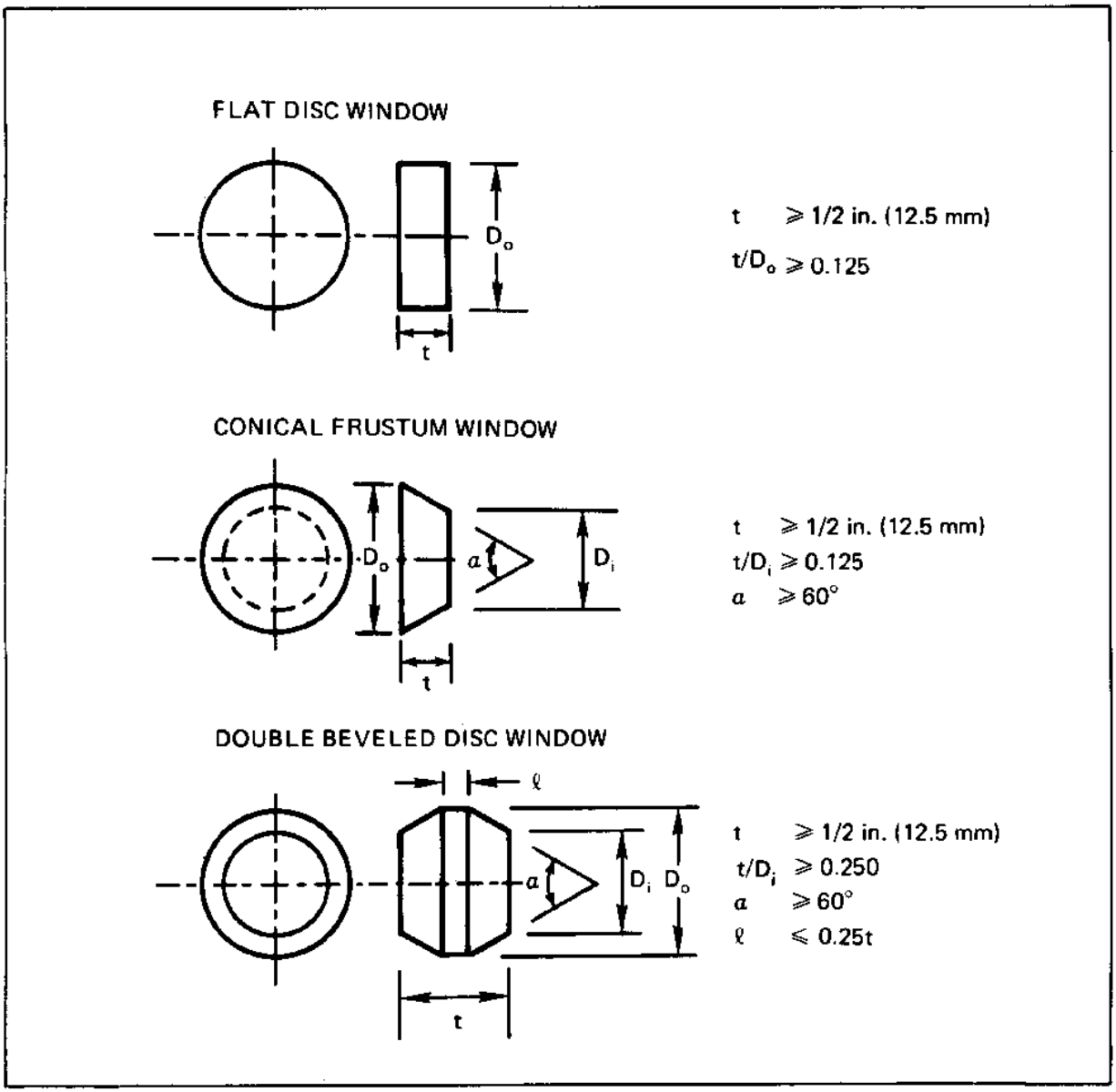

FIGURE 3-11
Standard Window Geometrics

(1) The dimensions of a standard window in the O to 10,000 psi (0 to 60 MPa) design pressure range should be based solely on the basis of the window's short term critical pressure (STCP) and the approved conversion factor (CF) for the given maximum ambient temperature. Minimum STCP values of some standard window geometries, based on tests conducted by the U.S. Navy, referenced in ANSI/ASME PVHO 1 (Reference 1) are given in Figures 3-12 through 3-15. CF values for the standard window geometries are given in Tables 3-3 and 3-4. Calculations of STCP on the basis of these figures satisfy the requirements of this Standard under paragraph A.3.c. However, it is also acceptable to have the designer establish the STCP with his own destructive tests of full scale, or model scale windows performed according to procedure in C-5 providing such tests are witnessed by and are acceptable to the Authorized Inspector.

(2) The dimensions of windows in the 10,000 to 20,000 psi (69 to 138 MPA) design pressure range, should be based solely on nondestructive tests in the form of long term and cyclic pressurizations. Dimensions of approved windows for this design pressure range (based on tests conducted by the U.S. Navy, referenced in ANSI/ASME PVHO 1 (Reference 1) are given in Table 3-5.

c. STCP of an acrylic plastic window is, for the purposes of this Standard, defined as the pressure at which catastrophic failure of the window takes place (window disintegrates releasing pressurized fluid into, or from the chamber) when subjected to hydrostatic pressure increasing at a constant rate of approximately 650 psi (4.5 MPA) per minute. The pressurization must take place at ambient temperature range of 70 to 77 deg. F (21 to 25 deg. C) in a flange that satisfies the requirements of paragraphs 8, 9, and 10. The CF is an empirical ratio of short term critical pressure to design pressure specified on the basis of long experience as the safe relationship between the two variables for a given temperature.

(1) The evaluation of a design is to be conducted on a minimum of five full-scale windows and the results are considered representative only if the lowest critical pressure is AT LEAST 75% of the mean critical pressure of the other four windows. In such a case, the STCP value of the window design is to be taken as the lowest critical pressure among the five tests. In case the lowest critical pressure does not meet this criterion, the STCP value of the window design is to be equal to the single lowest critical pressure among the five tests multiplied by a factor of 0.75.

(2) Model scale windows may be substituted for full-scale windows in c (1) tests, if in addition to the five model scale windows at least one full-scale window is tested. The test data (STCP calculated according to c (1)) generated by testing of model scale windows is considered acceptable only if the critical pressure of the full scale window is equal to, or above the single lowest critical pressure among the five tests. In case that the critical pressure of the single full scale window does not meet this criterion, four more full scale windows should be tested and the STCP value of the window design should be calculated according to c (1) on the basis of full-scale windows alone.

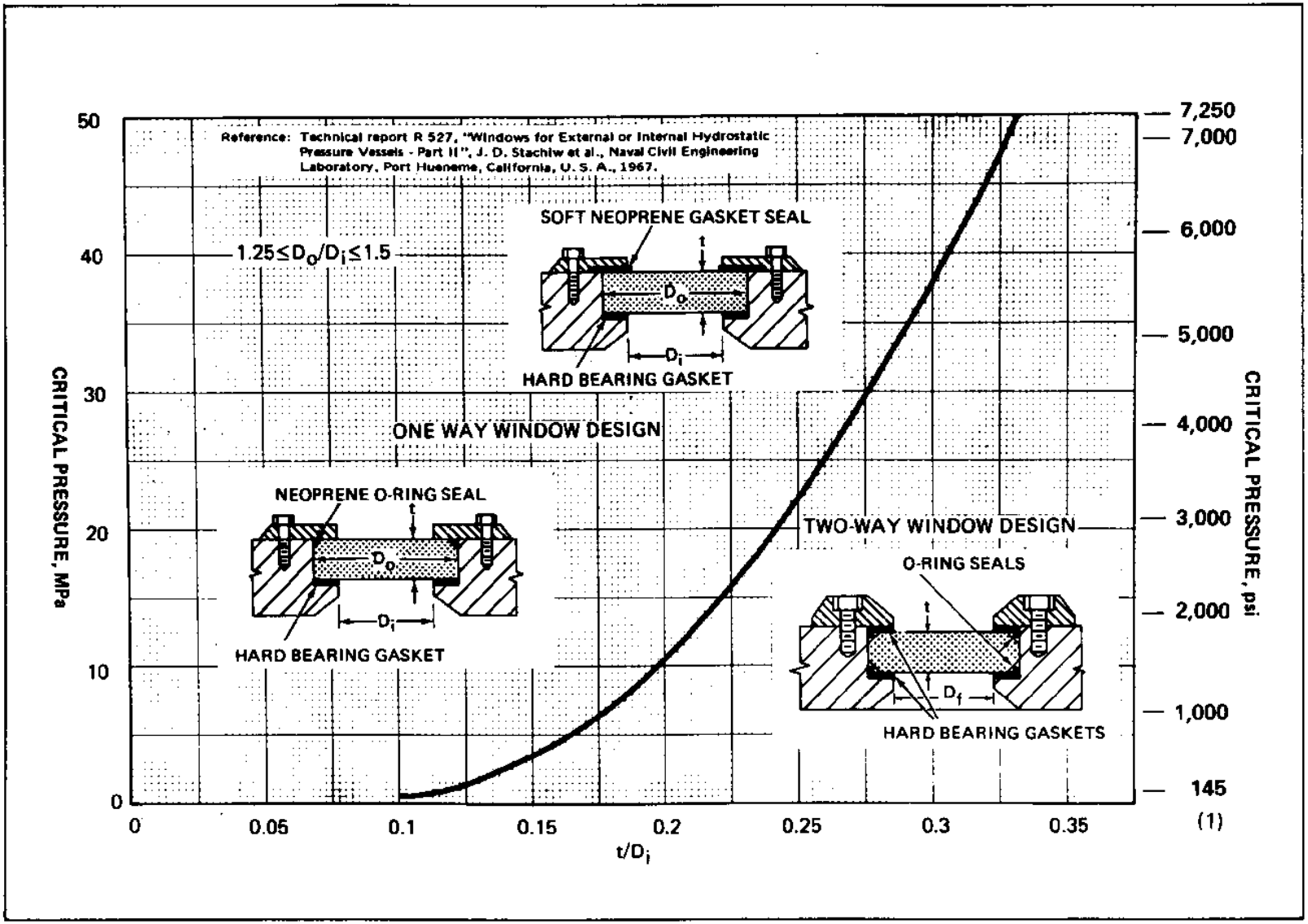

FIGURE 3-12

Short Term Critical Pressure of Flat Disc Acrylic Windows to 7,250 psi.

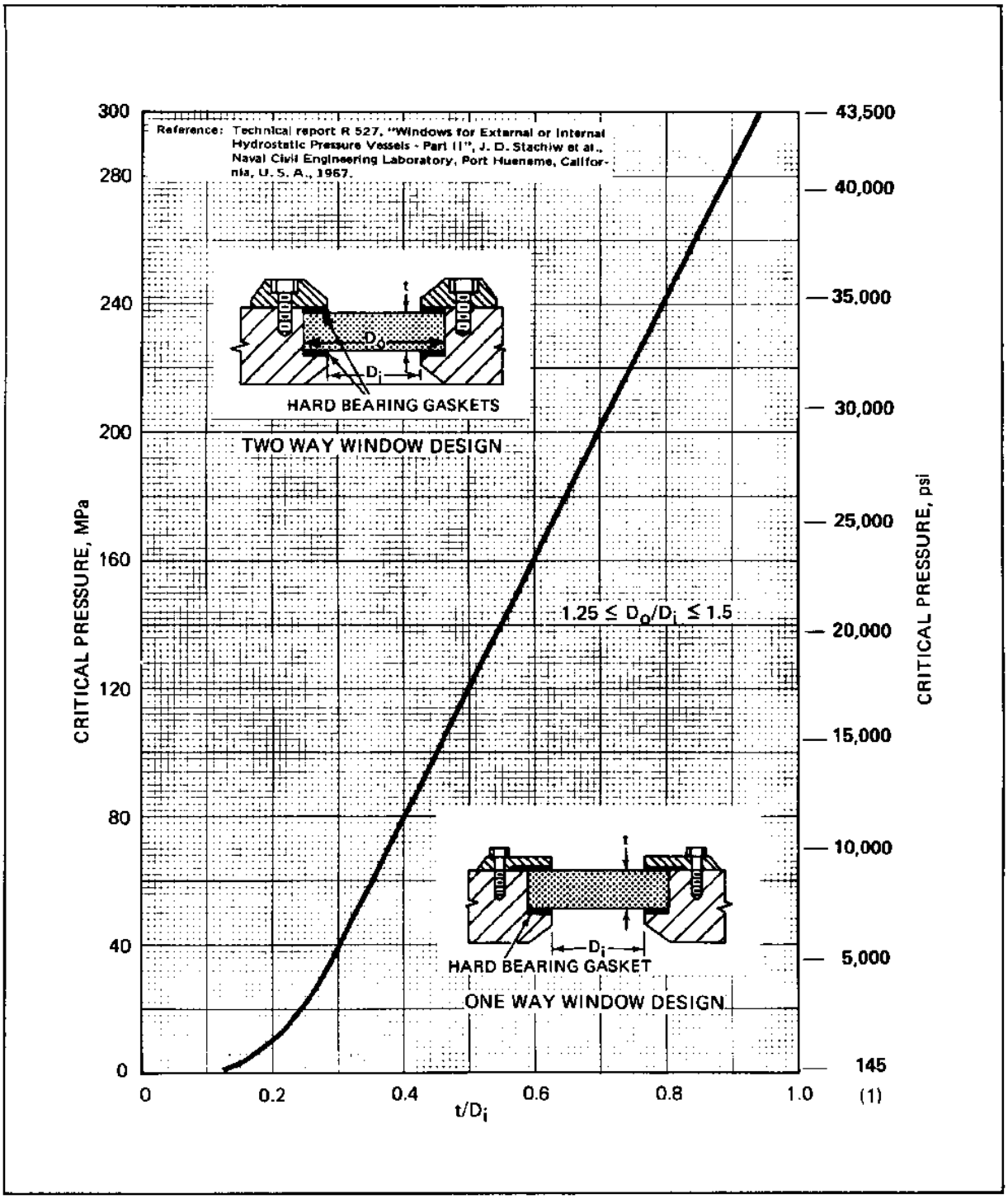

FIGURE 3-13
Short Term Critical Pressure of Flat Disc Acrylic Windows to 43,500 psi.

Windows to 43,500 psi.]

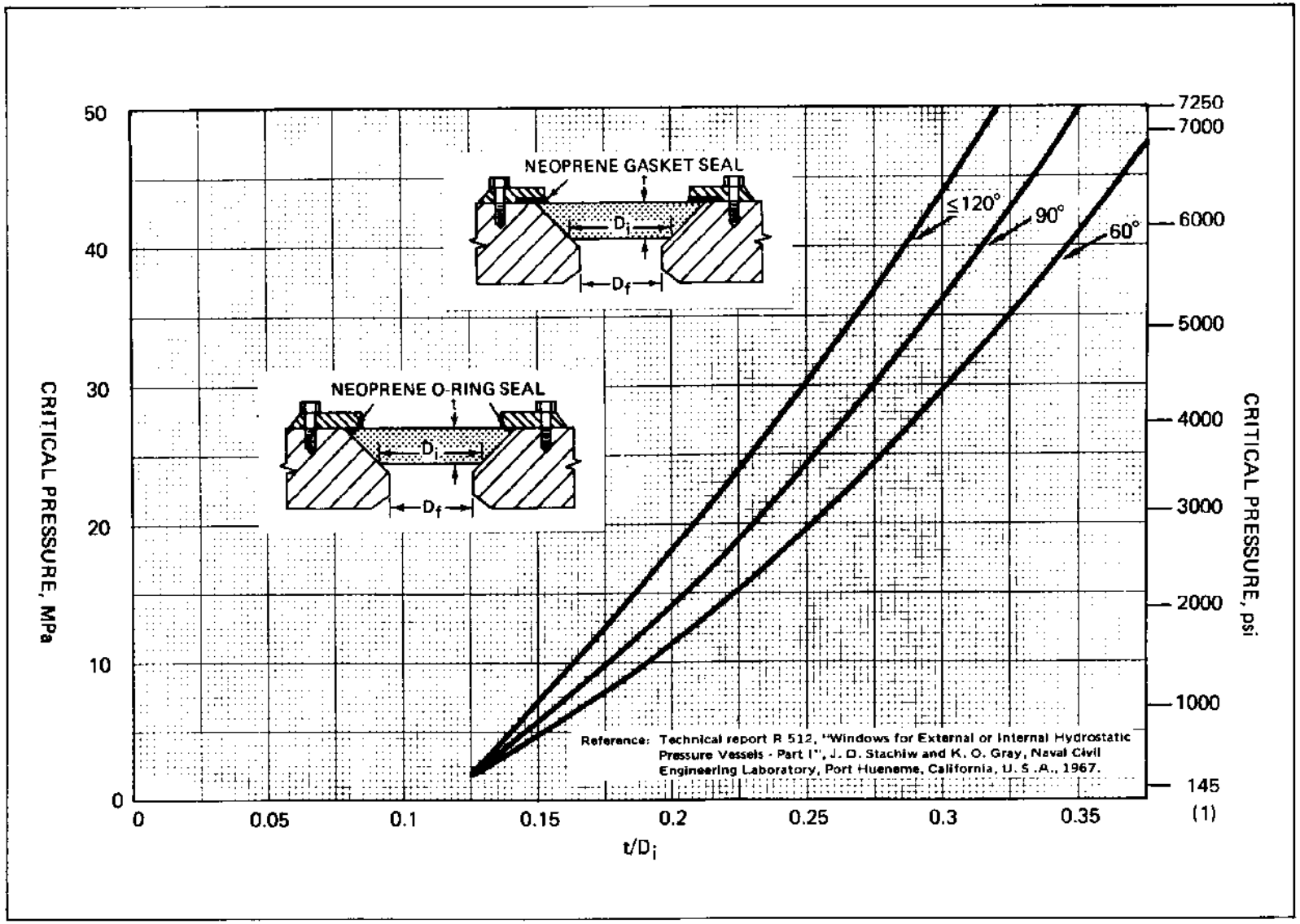

FIGURE 3-14

Short Term Critical Pressure of Conical Frustum Acrylic Windows to 7,250 psi.

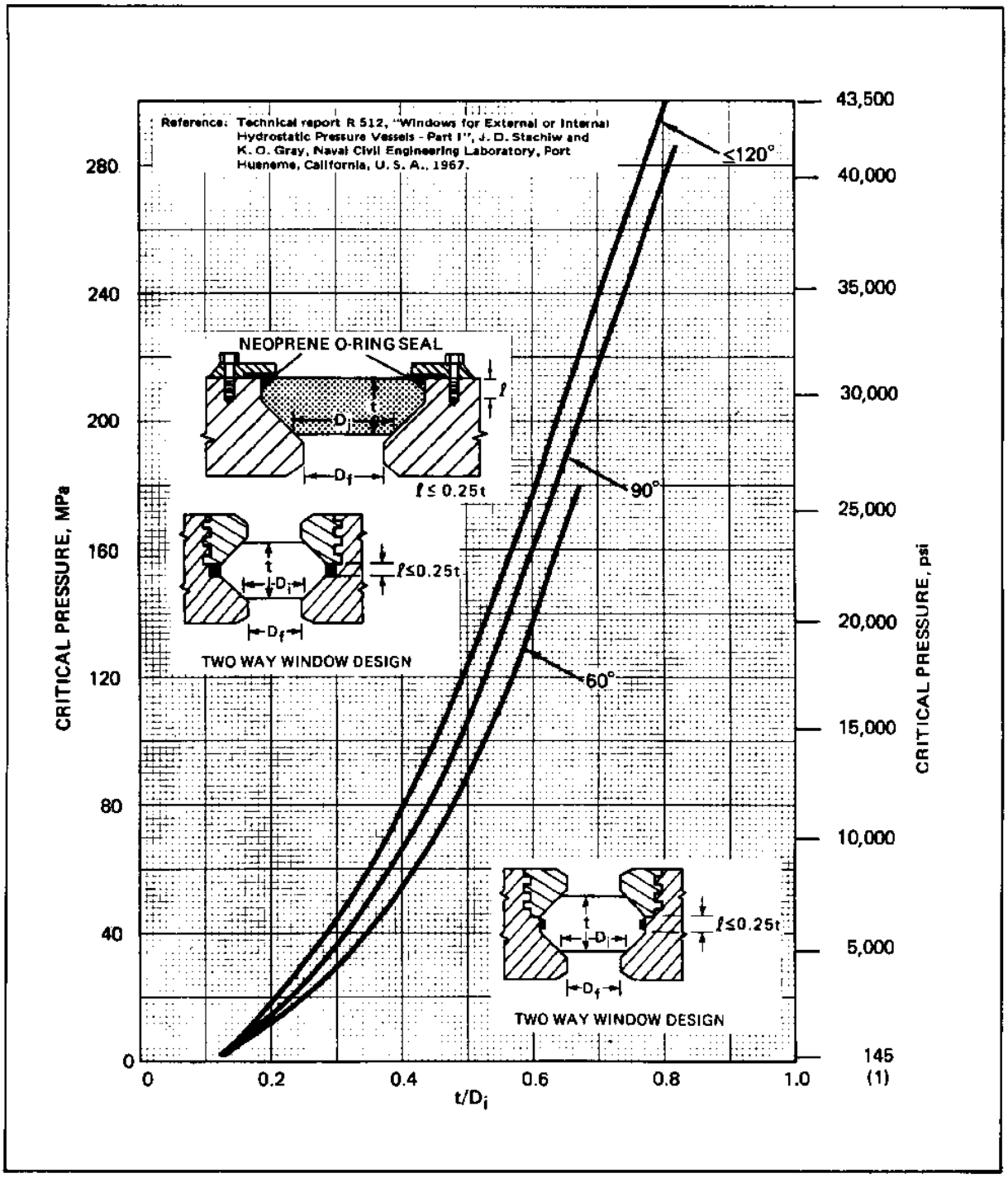

FIGURE 3-15
Short Term Critical Pressure of Conical Frustum Acrylic Windows to 43,500 psi.

TABLE 3-3

Conversion Factors for Acrylic Plastic Flat Disc Windows

Operational Pressure Ranges	Temperature Ranges				
	50F < / = (10C)	75F < / = (24C)	100F < / = (38C)	125F < / = (52C)	150F < / = (66C)
N=1	CF=5	CF=6	CF=8	CF=10	CF=16
2,500psi (17.2MPa)					
N=2	CF=5	CF=6	CF=8	CF=10	4,000psi (27.6MPa)
5,000psi (34.5MPa)					
N=3	CF=5	CF=6	7,000psi(48.3MPa)		
7,500psi (51.7MPa)					

Note: The conversion factors (CF) shown in Table 3-3 apply only to short term critical pressures (STCP) plotted in Figures 3-12 and 3-13.

TABLE 3-4
Conversion Factors for Acrylic Mastic
1. Conical Frustum Windows
2. Double Beveled Disc Windows

Operational Pressure Ranges	Temperature Ranges				
	50F < / = (10C)	75F < / = (24C)	100F < / = (38C)	125F < / = (52C)	150F < / = (66C)
N=1	CF=5	CF=6	CF=8	CF=10	CF=16
2,500psi (17.2MPa)	Conversion factors for these pressures must be interpolated between the upper and lower values shown				
N=2	CF=4	CF=5	CF=7	CF=9	4,500psi (31MPa)
5,000psi (34.5MPa)					
N=3	CF=4	CF=5			
7,500psi (51.7MPa)					
N=4	CF=4	CF=5	8,000 psi (55.2MPa)		
10,000 psi (69MPa)					

Note: The conversion factors (CF) in Table 3-4 apply only to short term critical pressures (STCP) plotted in Figures 3-14 and 3-15.

TABLE 3-5
Conical Frustum Windows for Design Pressures in
Excess of 10,000 psi (69 MPA)

	Temperature Ranges									
		< / = 50 F (10C)					< / = 75 F (10C)			
		D_{i}/D_{f}					D_{i}/D_{f}			
Design Pressure	t/D_{i}	60 deg.,	90 deg.,	120 deg.,	150 deg.,	t/D_{i}	60 deg.,	90 deg.	120 deg.,	150 deg.,
PSI (MPa)		^	^	^	^		^	^	^	^
(11,000) 75.86	1.0					1.1				
(12,000) 82.76	1.1					1.2				
(13,000) 89.66	1.2					1.3				
(14,000) 96.55	1.3					1.4				
(15,000) 103.45	1.4	1.13	1.17	1.23	1.69	1.5	1.13	1.17	1.23	1.69
(16,000) 110.34	1.5	^	^	^	^	1.6	^	^	^	^
(17,000) 117.24	1.6					1.7				
(18,000) 124.14	1.7					1.8				
(19,000) 131.03	1.8					1.9				
(20,000) 137.93	1.9	1.20	1.26	1.53	2.48	2.0	1.20	1.26	1.53	2.48

Note: D_{i}/D_{f} ratio refers to conical Frustrum seat specifications shown in Figure 3-16.

d. The STCP of a window accepted for service in pressure vessels for human occupancy should not be less than

$$STCP = (CF \times P)$$

where CF and P are the conversion factor and design pressure respectively.

(1) For flat disc windows, shown in Figure 3-11, use conversion factors from Table 3-3 and short term critical pressures from Figures 3-12 and 3-13. Figure 3-12 should be utilized for determination of critical pressures in the 0 to 7,250 psi (50 MPA) range, while Figure 3-13 should be used for 7,250 to 43,500 psi (50 to 300 MPA) range. Short term critical pressures may be also experimentally determined according to procedure inc above. For more detailed information on the design of flat disc windows see Reference 4, Stachiw, Flat Disc Acrylic Plastic Windows, Technical Note N-1127.

(2) For conical frustum windows, shown in Figure 3-11, use conversion factors from Table 3-4 an short term critical pressures from Figures 3-14 and 3-15. Figure 3-14 should be utilized for determination of critical pressures in the 0 to 7,250 psi (50 MPA) range, while Figure 3-15 should be used for the 7,250 to 43,500 psi (50 to 300 MPa) range. Short term critical pressures may be also experimentally determined according to procedures above. For more detailed information on the design of conical frustum windows, see Reference 3, Stachiw, Conical Acrylic Windows, 1966).

(3) For double bevelled disc windows, shown in Figure 3-11, use conversion factors from Table 3-4 and short term critical pressures from Figures 3-14 and 3-15, Figure 3-14 should be utilized for determination of critical pressures in the 0 to 7,250 psi (0 to 50 MPa) range, while Figure 3-15 should be used for the 7,250 to 43,500 psi (50 to 300 MPa) range. However, only 50 percent of the overall thickness should be utilized in calculation of short term critical pressure according to Figures 3-14 and 3-15.

e. When selecting the conversion factors from Tables 3-3 and 3-4 the temperature ranges must be chosen on the basis of highest ambient sustained temperature expected during operation of the chamber at the design pressure. If the interior of the chamber is illuminated by externally mounted incandescent lights shining through the windows, the 150 deg. F (66 deg. C) temperature range must be mandatory in selection of conversion factors for all windows. For chambers not illuminated with externally mounted lights, the
temperature ranges must be chosen on the basis of environment temperature where the chambers reach design pressure. If the design pressure is reached when:

(1) only submerged in water, use ambient temperature of water at that depth;

(2) only in air, use the average of maximum ambient external and internal air temperatures;

(3) either in air or water, use the average of maximum ambient external and internal air temperatures.

f. When a viewport is subjected to pressurization from both sides, the thickness of the window must be selected on the basis of the highest design pressure, regardless of whether this pressure is external or internal to the chamber.

8. WINDOW SEATS.

a. The window seat cavity in the viewport flange must be dimensioned to provide the window bearing surface with support during hydrostatic testing and subsequent operation at maximum design pressure. The dimensions of window seat cavities for standard window geometries are shown in Figures 3-16 and 3-17.

b. The surface finish on the window seat cavity must be at least 64 rms.

c. The surface of the window seat cavity must be protected against corrosion, preferably by a weld overlay of corrosion resistant material prior to final machining. Painting of seat cavity surface, anodizing it, or plating it with electroless nickel is also an acceptable means of preventing surface corrosion.

9. VIEWPORT FLANGES.

a. Because of the large mismatch between the moduli of elasticity in the plastic window and the metallic flange, it must be assumed in stress calculations that the window does not provide any reinforcement for the hull material around the penetrations.

b. Any of the analytical, or empirical, methods for stress and displacement calculations acceptable to the applicable ASME Code may be used for dimensioning the thickness, width, and location of the flange around the viewport penetration.

c. Reinforcements for pressure vessel penetrations meeting the requirements of the applicable ASME Code will be considered acceptable for viewport flanges without further engineering calculations.

d. The following minimum requirements must be met by viewport flanges shown on Figures 3-16 and 3-17 with a finished diameter opening in excess of 24 in (635 mm).

(1) Radial deformation of the window seat at maximum internal or external design pressure must be less than 0.002 x $D_{\lceil i \rceil}$.

(2) Angular deformation of the window seat at maximum internal or external design pressure must be less than 0.5 degrees.

CONICAL FRUSTUM WINDOW

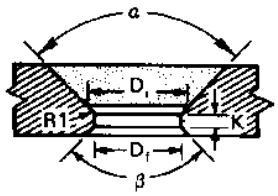

D_o/D_i RATIOS

OPERATIONAL PRESSURE RANGE	† INCLUDED ANGLE			
	60°	90°	120°	150°
N = 1	1.02	1.03	1.06	1.14
N = 2	1.04	1.06	1.12	1.28
N = 3	1.08	1.09	1.17	1.36
N = 4	1.10	1.15	1.20	1.42

SPHERICAL SHELL SECTOR WINDOW WITH CONICAL EDGE

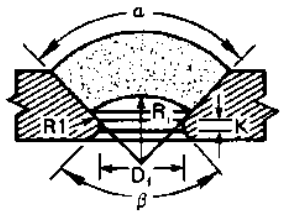

$(2R_i \sin(\alpha/2))/D_i$ RATIOS

OPERATIONAL PRESSURE RANGE	† INCLUDED ANGLE				
	60°	90°	120°	150°	180°
N = 1	1.02	1.02	1.02	1.02	1.02
N = 2	1.03	1.03	1.03	1.03	1.03
N = 3	1.05	1.05	1.05	1.05	1.05

FLAT DISC WINDOW

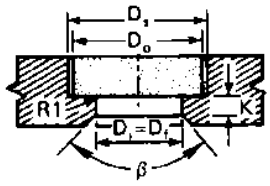

$1.250 \leq D_o/D_i \leq 1.50$

† – FOR α BETWEEN VALUES SHOWN INTERPOLATION IS REQUIRED

K– IS SELECTED ON THE BASIS OF STRUCTURAL ANALYSIS

β – IS SELECTED ON THE BASIS OF OPTICAL REQUIREMENTS

1/32 in. (1.0 mm) ≤ R1 ≤ 1/16 in. (2.0 mm)

FIGURE 3-16
Seat Cavity Requirements (Conical Frustum, Spherical Shell, and Flat Disc)

DOUBLE BEVELED DISC WINDOW

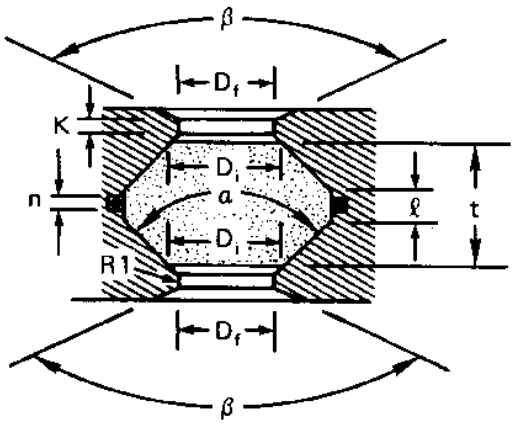

† – FOR a BETWEEN VALUES SHOWN INTERPOLATION IS REQUIRED

K – IS SELECTED ON THE BASIS OF STRUCTURAL ANALYSIS

β – IS SELECTED ON THE BASIS OF OPTICAL REQUIREMENTS

1/32 in. (1.0 mm) ⩽ 1/16 in. (2.0 mm)

$\ell \leqslant 0.25t$

$n \leqslant \ell$

D_i/D_f RATIOS

OPERATIONAL PRESSURE RANGE	† INCLUDED ANGLE			
	60°	90°	120°	150°
N = 1	1.02	1.03	1.06	1.14
N = 2	1.04	1.06	1.12	1.28
N = 3	1.08	1.09	1.17	1.36
N = 4	1.10	1.15	1.20	1.42

FIGURE 3-17
Seat Cavity Requirements (Double Beveled Disc)

10. WINDOW SEALS.

a. As primary seals for standard window geometries shown in Figure 3-11, a soft elastomer compressed between the high pressure face of the window and retainer ring will be acceptable. The soft elastomeric seal may take the form of a flat gasket, or a seal ring with O, U or X cross section. The gasket or seal ring must be of sufficient thickness to permit adequate compression without permanent set. Double bevelled disc windows must utilize as primary seal a seal ring radially compressed between the cylindrical surface of the window facing the pressure and the cylindrical window seat in the flange.

b. Retainer rings must provide the following minimum initial compression of the gasket in millimeters (for values of N, see Tables 3-3 and 3-4).

(1) $N \times \frac{(0.015\ D_{[i]})}{\text{Tan [alpha]}/2}$ - conical Frustrum Windows

(2) (0.01t + 0.25) - flat disc windows

c. The minimum compression of seal rings must, be governed by specifications of seal ring manufacturers for the given seal ring size and service.

d. A secondary seal is required between the window and the steel cavity seat for flat discs, spherical sectors with square edge and hemispheres with equatorial flange. The secondary seal also serves as a bearing gasket for the window. This gasket must be bonded with contact cement to the metal flange seat. Thickness of the gasket must not exceed 1/8 in (3.0 mm). Neoprene impregnated nylon cloth, neoprene of 90 durometer hardness, and cork gaskets have been found to be acceptable for such application.

e. Seal ring grooves are not permitted in the bearing surface of any window shape, or the bearing surface of the seat in metal flange unless experimental data, showing the cyclic fatigue life of such a viewport assembly at design pressure and temperature to be in excess of $10^{[4]}$ standard pressure cycles (four hours under pressure followed by four hours of relaxation), is submitted to and accepted by the Committee on PVHO. Seal ring grooves are not allowed in any window shape or its seat in the metal flange.

11. DIMENSIONAL TOLERANCES AND SURFACE FINISH.

a. Thickness of the window must be everywhere equal to or greater than the nominal value determined by procedure of paragraph 7d.

b. The major diameter of the conical bearing surface on a window, must be machined within +0.000/-0.002 in. of nominal value.

c. The included conical angle of the window must be within +0.25/-0.000 degree of nominal value.

d. The included conical angle of the window seat in the flange must be within +0.000/-0.25 degree of the nominal value.

e. The major diameter of the conical seat cavity in the flange must be within +0.002/-0.000 in. of nominal value.

f. The external diameter of the flat disc window shall be within +0.000/-0.01 in. (+0.000/-0.25 mm) or +0.000/-0.03 in. (+0.000/-0.75 mm) of the nominal value depending on whether the window will be sealed with an O-ring or a flat gasket seal, respectively.

g. The diameter of the seat cavity for a flat disc window shall be within +0.01/0.000 in. (+0.25/-0.000 mm) or 0.03/-0.000 in. (+0.75/-0.000 mm) of the nominal value depending on whether the window will be sealed with an O-ring or a flat gasket seal.

h. The bearing surface of the window shall be no rougher than 32 rms.

12. FABRICATION OF WINDOWS.

a. Windows must be fabricated only from acrylic plastic casting satisfying the requirements of paragraph 6.

b. During the fabrication process, each window must be identified with identification and fabrication verification documents containing pertinent material and fabrication data.

c. The windows must be annealed at least once during the fabrication process. The mandatory annealing must take place prior to final installation after all forming, machining, and machine polishing operations have been already completed by the fabricator. Annealing schedule shown in Table 3-6 must be followed. Handlapping and hand polishing after annealing is allowed.

d. No fabrication process, solvent, cleaner, or coolant must be used during the fabrication that degrades the original physical properties of the acrylic casting.

13. INSTALLATION OF WINDOWS.

a. The window cavity seat in the flange must be thoroughly cleaned. Aliphatic naphtha and hexane are suitable for cleaning.

b. The window cavity seats for all window shapes possessing conical bearing surfaces must be thoroughly coated with grease prior to placement of window inside the window cavity so that the greased surfaces will act as secondary seals. Silicone greases are suitable for this purpose.

c. After placement of window inside the window cavity, the primary elastomeric seal will be placed on the high pressure face of the window, and the retainer tightened until the seal compression reaches the minimum value specified in paragraph 10.

TABLE 3-6
Annealing Schedule for Acrylic Plastic Windows

A. Recommended Heating Times for Elevated Temperature Annealing of Acrylic

Thickness (inches)	Heating Time* in Hours for Acrylic Placed in a forced-Circulation Air Oven Maintained at the Indicated Temperature		
	212F (100C)	195F (90C)	185F (85C)
0.500 to 0.750 inc.	4	6	11
0.875 to 1.125 inc.	4-1/2	6-1/2	11-1/2
1.250 to 1.500 inc.	5	7	12
1.750	5	7	12
2.000	6	8	13
2.250	7	9	14
2.500	9	11	15
3.000	11	12	17
3.250	13	14	17
3.500	13	14	19
3.750	14	16	20
4.000	17	18	22

* Includes period of time required to bring part up to annealing temperature but not cooling time

B. Recommended Cooling Rates for Acrylic Subjected to Elevated Annealing Temperatures

Thickness (inches)	Maximum Cooling Rate	Time in Hours to Cool Acrylic from the Indicated Annealing Temperature at the Maximum Permissible Rate to Removal Temperature of 160 deg. F		
	deg. F/hr (deg. C/hr)	212F (100C)	195F (90C)	185F (85C)
0.500 to 0.750 inc.	14 (25)	2	1-1/4	1
0.875 to 1.125 inc.	10 (18)	3	2	1-3/4
1.250 to 1.500 inc.	7.2 (13)	4	2-1/2	2
1.750	6.1 (11)	4-1/2	2-3/4	2
2.000	5.5 (10)	5-1/4	3-1/2	2-1/2
2.250	5 (9)	6	4	3
2.500	4.5 (8)	6-1/2	4-1/4	3-1/4
3.000	4 (7)	7-1/4	4-3/4	3-1/2
3.250	3.5 (6)	8	5-1/4	4
3.500	3.5 (6)	8-3/4	5-3/4	4-1/4
3.750	3.5 (6)	9-1/4	6-1/4	4-1/2
4.000	3 (5)	10-1/2	6-3/4	5

14. PRESSURE TESTING OF WINDOWS.

a. Each window must be pressure tested at least once prior to being accepted for service.

b. The pressure test must take place with the window installed in the chamber, or a test fixture whose window seat dimensions, retaining ring, and seals are identical to that of the chamber.

c. The window must be pressurized with gas or water until design pressure is reached. The design pressure must be maintained for a minimum of one, but no more than four hours, followed by depressurization at a maximum rate not to exceed 650 psi (4.5 MPa) per minute.

d. The temperature of the pressurizing medium during the test must be the design temperature for which the window is rated with a tolerance of +0/-5 deg. F. Brief deviations from the above temperature tolerances are allowed not exceeding +/- 10 deg. F and lasting less than 10 minutes.

e. Windows that leak during the pressure tests must be removed, fitted out with new seals, and retested. If, during the retest, the leakage continues, efforts will be made to complete the test by stopping the leak with a temporary seal. The inability of seals to operate properly during the test must be noted in the test report, submitted at the conclusion of the pressure test to the chamber manufacturer/user.

f. At conclusion of the pressure test, the windows must be visually inspected for presence of crazing, cracks or permanent deformation. This examination may be performed without removal of the window from the chamber.

g. Presence of crazing, cracks or permanent deformation visible with unaided eye (except for that necessary to correct for 20/20 vision) must be cause of rejection of the windows and must be so noted on the test report.

h. A hydrostatic or pneumatic test in excess of design pressure may be substituted for the mandatory test of c. and d. During the hydrostatic or pneumatic test the pressure must be maintained for a minimum of one, but no more than four hours, The test pressure must not exceed 1.6 x design pressure or 20,000 psi, whichever is the lesser value. The temperature of pressurizing medium during the test must be at least 25 deg. F lower than the design temperature to prevent permanent deformation of windows tested above design pressure. All he other requirements of the mandatory pressure test spelled out in e., f., and g. must be retained.

i. ANSI/ASME PVHO 1, requires extensive recorded documentation for acrylic windows in manned chambers. Special forms must be completed for the material properties, the fabrication procedures and the test methods for each window. These forms are contained in the PVHO Code. The Navy’s diving safety program requires the same documentation for system certification.

Section 2. DOORS AND CLOSURES

1. DOORS AND CLOSURES. Doors and closures provide the means for personnel to enter into or egress from a PV. They also provide for the moving of equipment into and out of a PV. When doors or closures are arranged so that personnel, equipment or animals can be transferred into or out. of a vessel without loss of internal pressure, they are called "locks."

There are two basic types of doors and closures: those that are sealed by pressure and those that have a means of locking the door against pressure. Each door requires careful design, fabrication, installation testing and maintenance to provide safe, easy and rapid operation from inside and outside the PV without the use of special tools. The door hinging, closing, locking and sealing elements must be resistant to and protected from abuse due to rough handling or possible accidents. A typical recompression chamber door is shown at Figure 3-18. Doors may be fabricated of one of more pieces, of flat plate or of dished plate with pressure on either the convex or concave side. Whenever practical a door should be arranged so that the contained pressure holds the door closed, and if possible no dogging or latching mechanism should be used other than a handle to pull the door closed or open.

A typical Service Lock is shown at Figure 3-19. Note that this lock has two types of doors. The door inside the chamber is sealed by pressure and the outer door is sealed by swing bolts.

2. SIZE REQUIREMENTS. The proper sizing of doors is important for manned facilities. Doors which are unnecessarily large reduce chamber strength and are excessively heavy while doors which are too small adversely affect chamber utilization. The human engineering of hyperbaric chamber doors is a difficult problem because they are nearly always round with an extremely thick, sharp-edged threshold. Although there is little the designer can do to rectify this, he can make use of statistical information to size doors properly for the chamber crew members.

a. Anthropometric Data. Tables 3-7 and 3-8 give some basic anthropometric data useful in sizing doorways and for other design considerations in hyperbaric chambers. Additional human factors information is available in MIL-STD-1472 (see reference 5, Human Engineering Design Criteria).

(1) Vertical doors. From Figure 3-20, which was scaled from 95th percentile data in Table 3-8, it can be seen that a diameter of 36 to 40 inches provides reasonable clearance for convenient entry through a vertical door.

(2) Horizontal doors. The 95th percentile shoulder breadth is about 20 inches. Because the body can be supported with the arms essentially vertical, a reasonable minimum diameter for a vertical entry door is 22 to 24 inches.

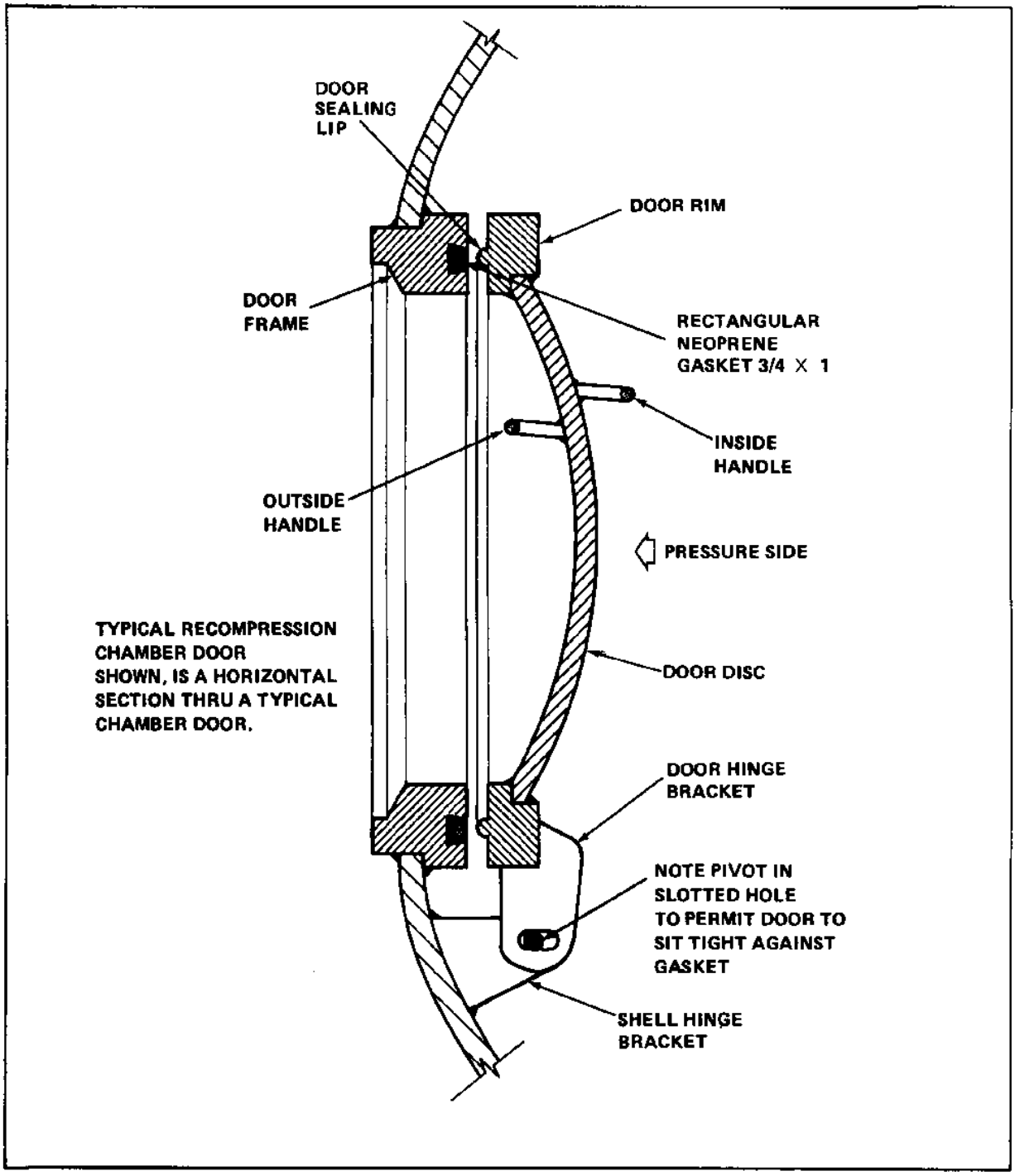

FIGURE 3-18
Typical Recompression Chamber Door

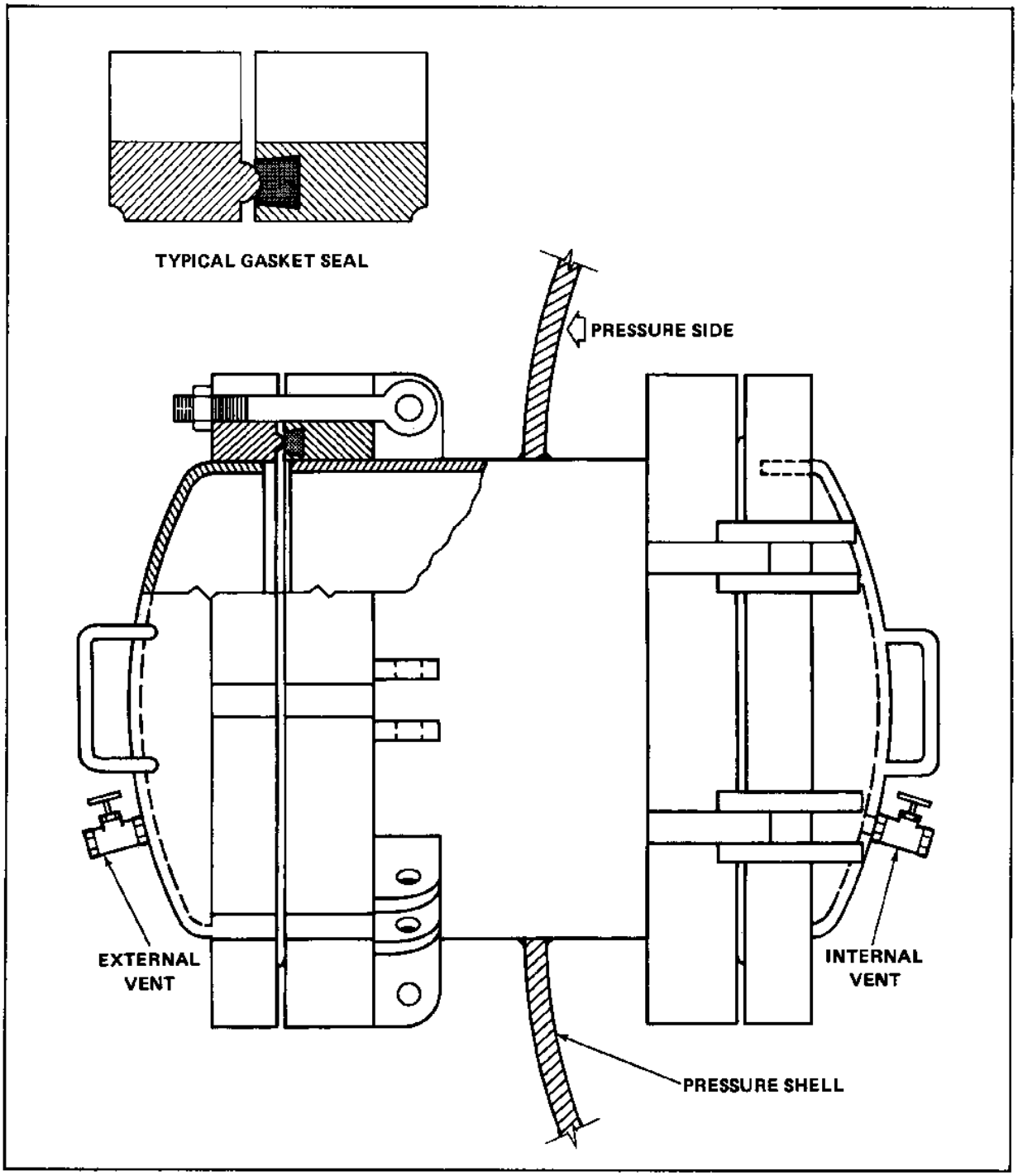

FIGURE 3-19
Typical Service Lock

TABLE 3-7
Standing Anatomical Dimensions (inches)

Dimension	5th Percentile	Median	95th Percentile
1. Arm span	65.9	70.8	75.6
2. Shoulder breadth (bideltoid)	16.5	17.9	19.4
3. Forward arm reach (from seat back or wall)	31.9	34.6	37.3
4. Chest depth	8.0	9.0	10.4

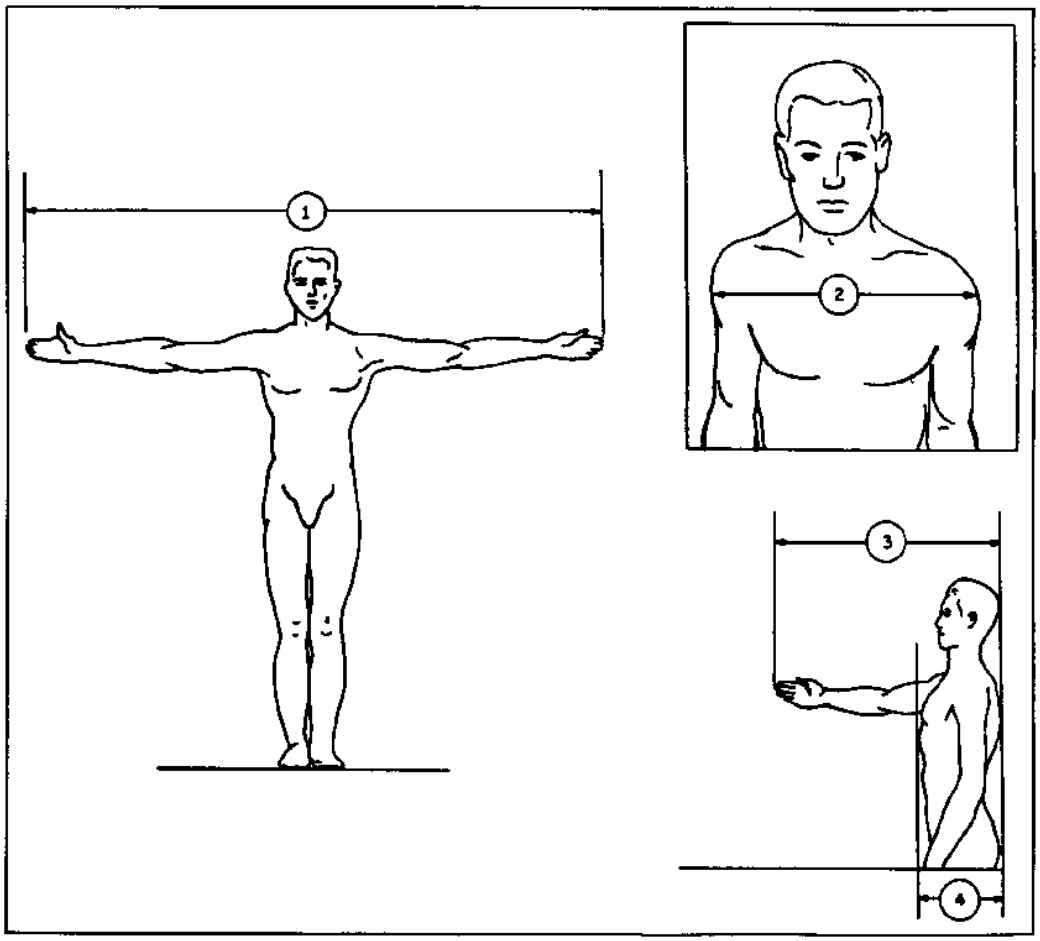

TABLE 3-8
Seated Anatomical Dimensions (inches)* (See Reference 6)

Dimension	5th Percentile		Median		95th Percentile	
	Erect	Slump	Erect	Slump	Erect	Slump
1. Sitting height	33.8	31.8	36.0	34.0	38.0	36.0
2. Eye height	29.4	27.4	31.5	29.5	33.5	31.5
3. Shoulder (acromion) height	21.3	19.6	23.3	21.6	25.1	23.4
4. Elbow height	6.6	4.9	9.1	7.4	11.5	9.8
5. Thigh clearance	4.5	-	5.6	-	6.8	-
6. Knee height (above floor)	20.1	-	21.7	-	24.4	-
7. Buttock-knee length	21.2	-	23.6	-	25.4	-
8. Buttock-leg length	39.4	-	42.7	-	46.7	-
9. Hip breadth	12.7	-	13.9	-	15.4	-

*Slump dimensions are corrections of erect data, allowing -2.0 inches for items 1 and 2 and -1.7 inches for items 3 and 4.

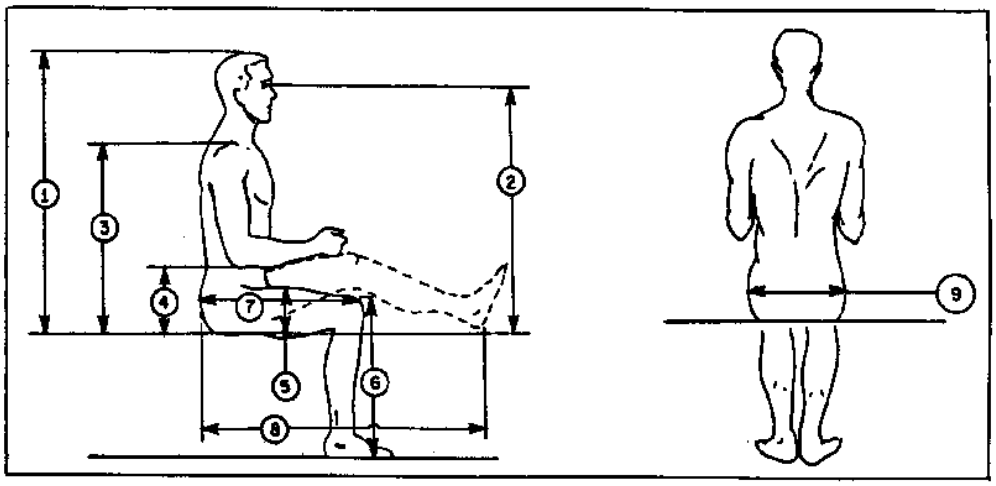

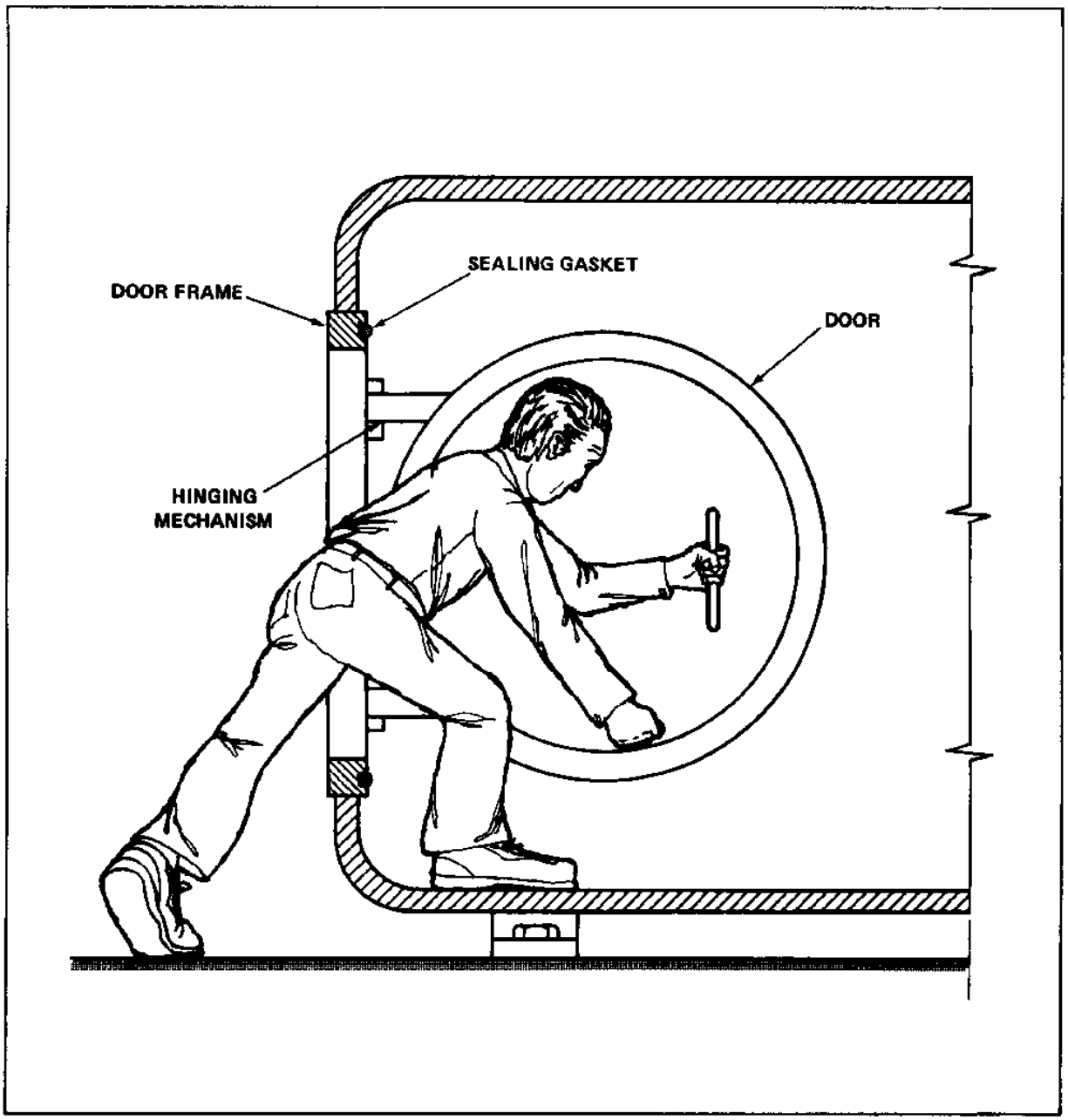

FIGURE 3-20
Typical Recompression Chamber Entrance (Vertical Door)

b. Additional Clearance for Bulky Clothing. The dimensions given in (1) and (2), above, are valid for light work clothing only. An additional allowance of 10 to 20 percent may be necessary for bulky clothing and accessories. Heavy clothing has two primary effects. It increases the anatomical dimensions, that is, arm and thigh thicknesses, and reduces mobility parameters such as leg movement and forward arm reach.

c. Clearance for Door. In conjunction with door sizing requirements, the designer should consider interior clearances affecting movement of the door.

3. CLOSING MECHANISMS. Closing mechanisms, whether quick or slow acting, consist of a means for locking, for sealing, and a method of suspending the door on hinges.

a. Quick Acting. Several types of quick-acting commercially available doors have become available for hyperbaric chamber use. These include the breech-lock, the split-clamp type, and the multiple-lever type segmented ring.

(1) Breech Lock. An example of a breech-lock door on a service lock is shown in Figure 3-21. The cylinder flange and door are held together by interlocking lugs. The door rotates 30 deg. to engage the locking lugs. An O-ring establishes the seal when pressurized.

(2) Split Clamp. A split-clamp door shown in Figure 3-22 is held closed by the wedging action of the split clamp. It is very much like the breech lock, except that the locking-ring motion is substantially radial instead of circumferential. The two halves of the locking ring are usually driven by synchronized screw actuators as illustrated, although hydraulic actuation could be used.

(3) Segmented Ring. The segmented ring shown at Figure 3-23 is a relatively quick and convenient type of closure which has been used successfully for CO_2 scrubbers.

b. Swing Bolt. The swing-bolt closure is intermediate between the quick-acting door and the bolted flange. The pivoted bolts make the door much more convenient to open than a bolted flange, since the nuts need only be loosened enough to pivot the bolts out of the way. However, if the number of clamping points approaches that of a typical bayonet-type door, the operating time increases significantly. The typical service lock shown in Figure 3-19 has this type of outer door and a commercially available model is shown in Figure 3-24. The advantages of the swing-bolt door are its availability and modest cost.

c. Alternate Closing and Locking Devices. Alternate closing and locking devices which are not easily opened, but are simpler and cheaper are suitable for infrequently used closures. These include the conventional bolted flange and the clamping-bar closure shown at Figure 3-25. Many other styles are readily available.

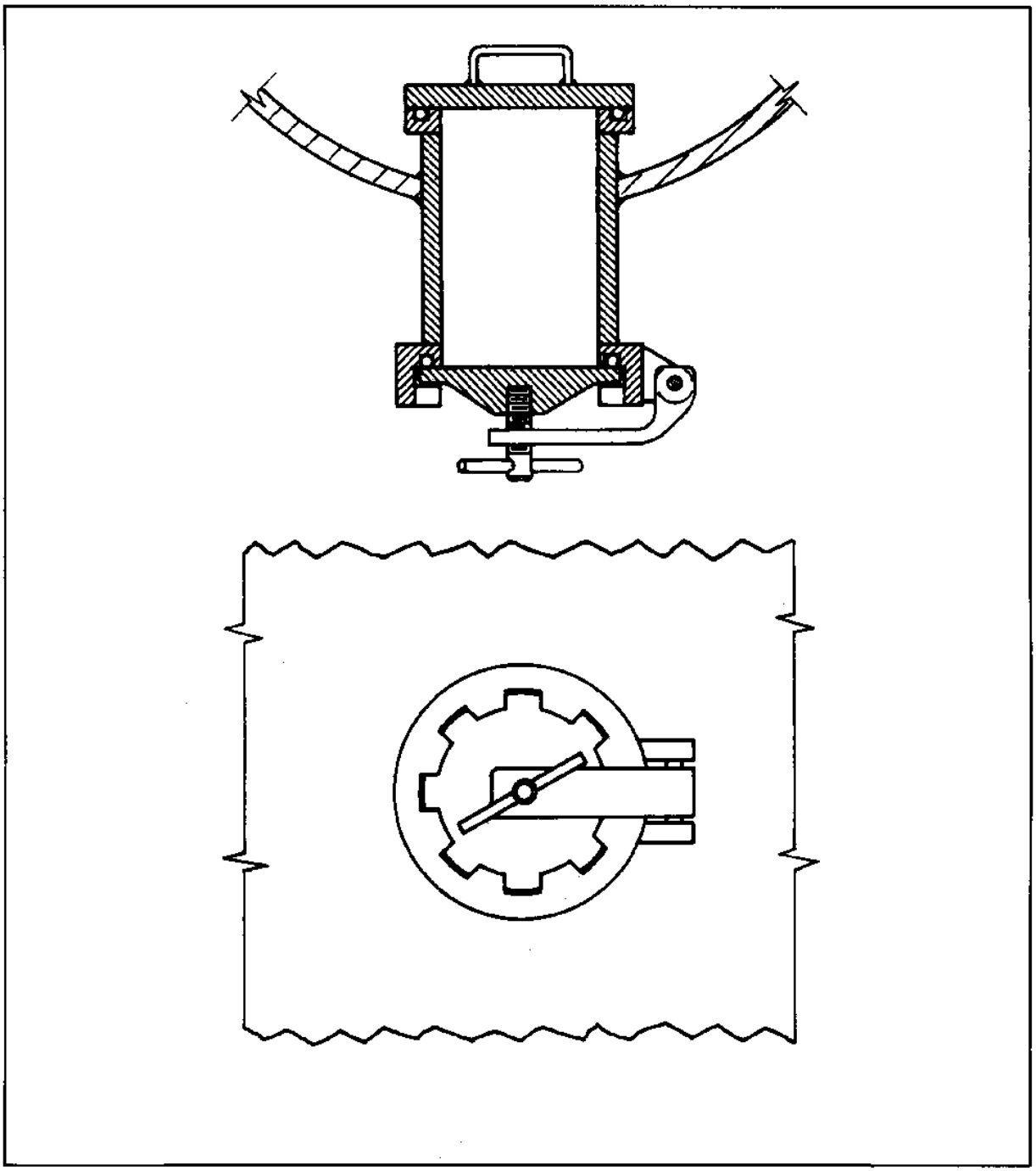

FIGURE 3-21
Breech Lock

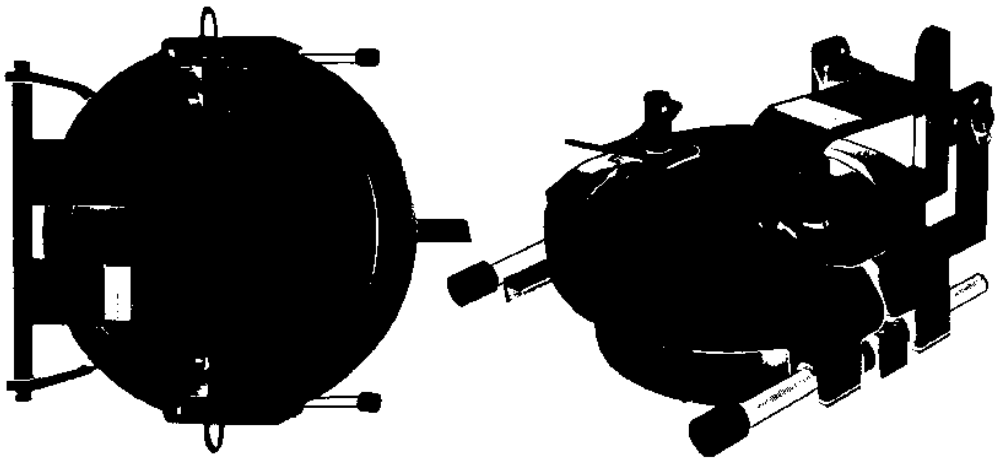

Double-Bolt Vertical

Double-Bolt—Horizontal

COURTESY TUBE TURNS DIVISION
(CHEMETRON CORP)

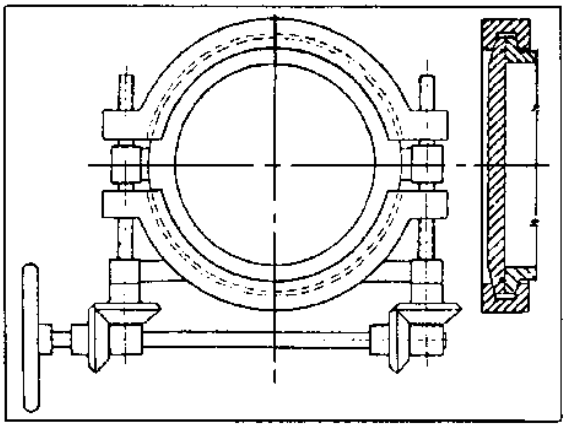

(Reproduced with permission from "Commonwealth Engineer", June, 1952, Copyright Tait Publishing Company, Melbourne, Australia)

FIGURE 3-22
Spring Clamps

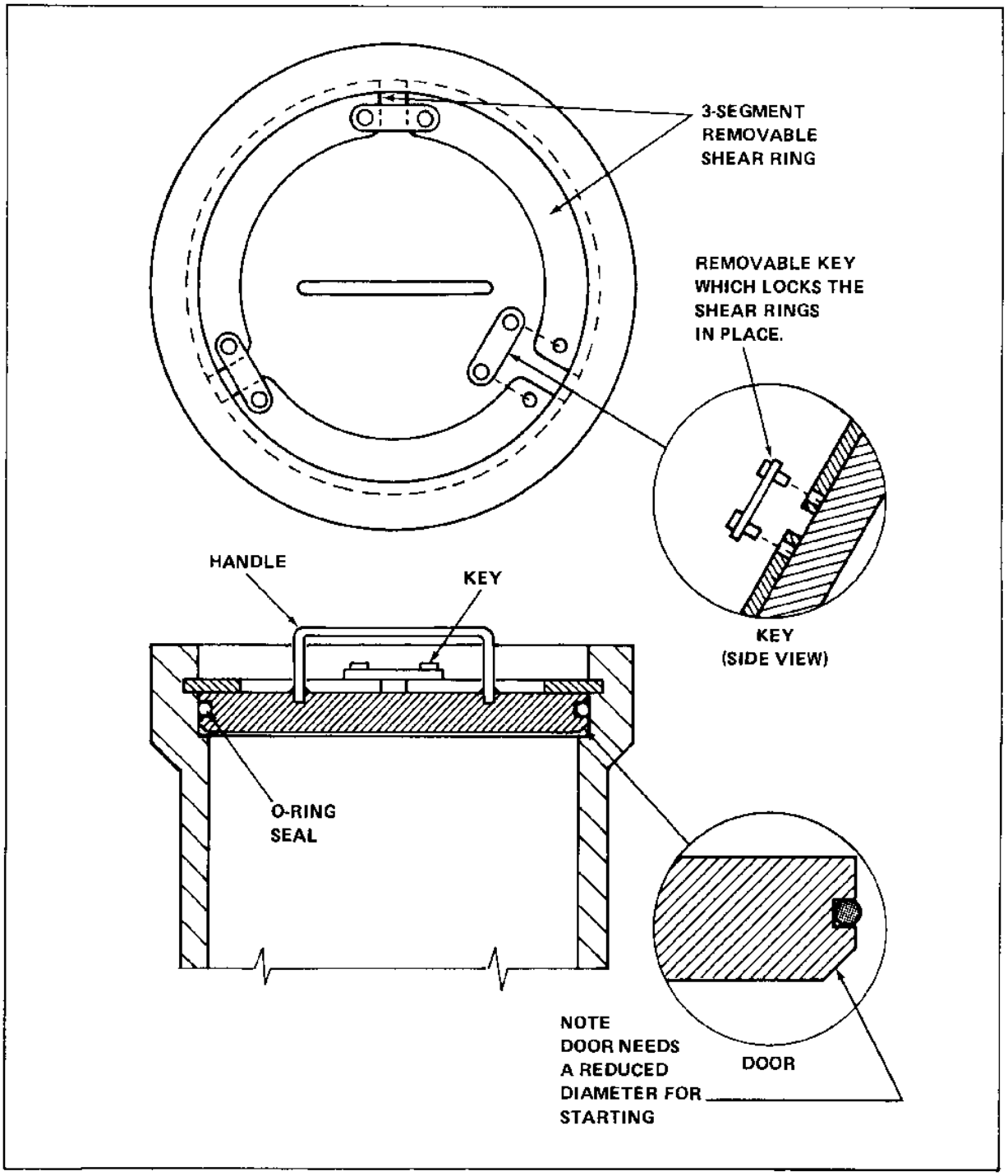

FIGURE 3-23
Segmented Ring Closure

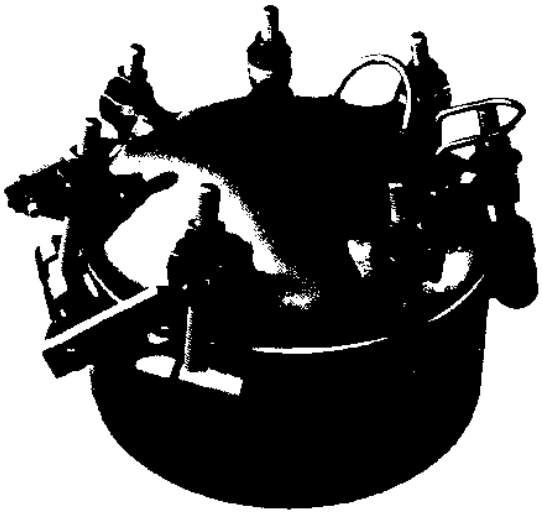

COURTESY TUBE TURNS DIVISION
(CHEMETRON CORP)

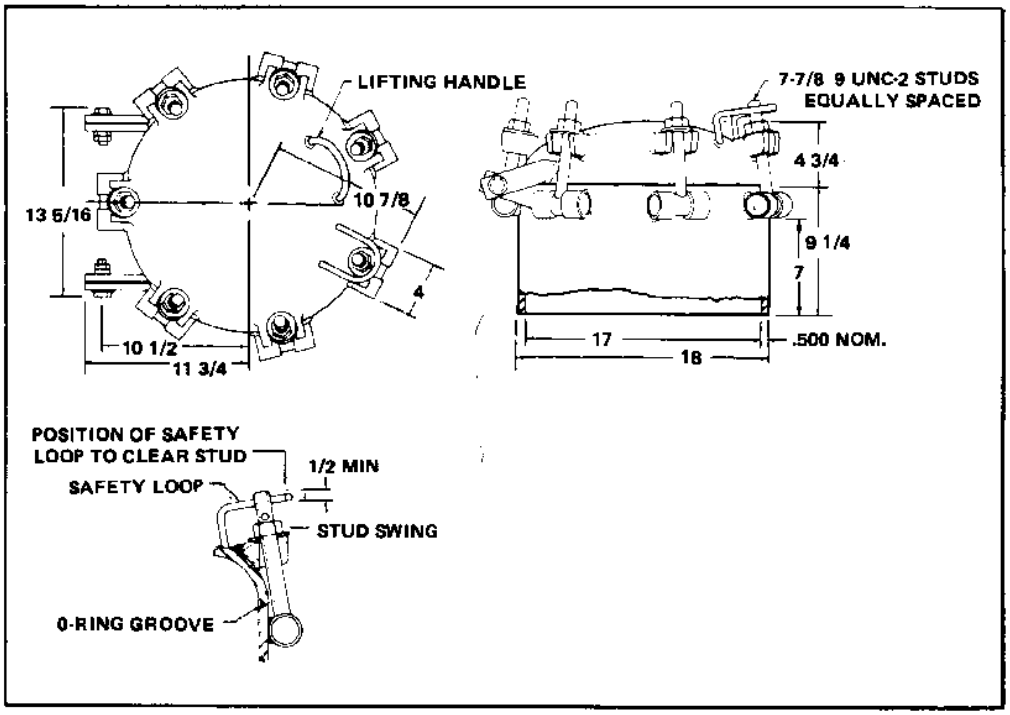

FIGURE 3-24
Swing Bolt Closure

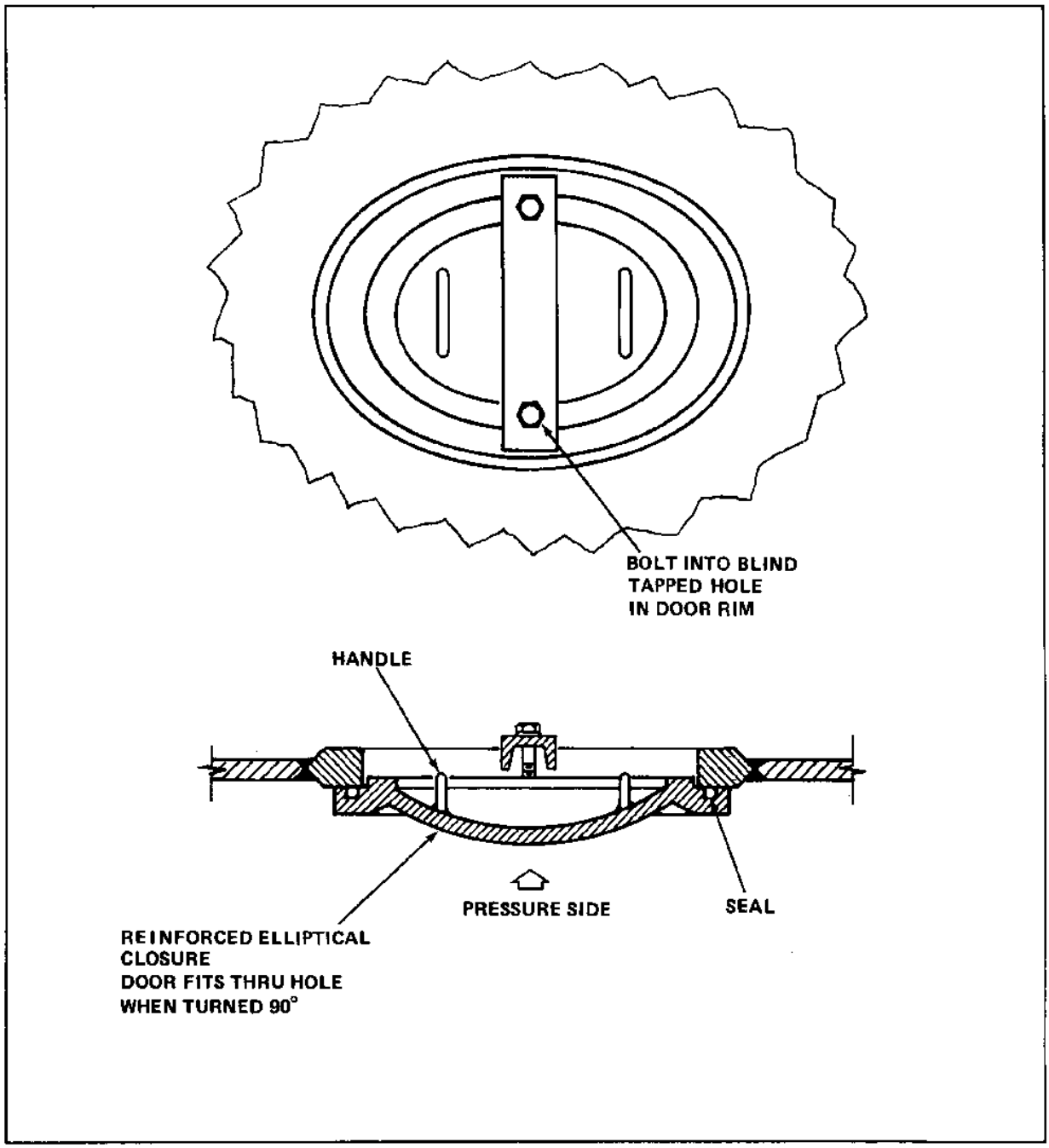

FIGURE 3-25
Clamping Bar Closure

4. DOOR AND CLOSURE HINGES.

a. Heavy doors and closures should be supported on compound action hinges with antifriction bearings and precision adjustments.

(1) Compound hinges, Figure 3-26, allow the door or closure to close with more uniform gasket compression than simple hinges.

(2) Antifriction bearings permit easy door or closure movement by hand.

(3) Precision adjustments permit obtaining and maintaining proper door position and alignment of sealing surfaces.

(4) Vertically opening doors or closures should have their mass counterbalanced by counterweights or springs to prevent slamming when the door or closure is lowered.

5. SEALS FOR CLOSURES AND DOORS. The seals for hyperbaric chamber doors and closures fall into two main classes: mechanically energized and pressure energized. Mechanical seals are clamped and compressed by the locking mechanism. Their sealing preload is independent of the pressure, so they must always be compressed sufficiently to seal the maximum rated pressure of the system. Mechanical seals generally employ Neoprene rings or rectangular-section gaskets.

Pressure energized seals derive their sealing compression from the pressurized gas in the chamber. They are usually installed with a very light preload and the sealing force increases as the retained pressure increases. The seals take a variety of proprietary forms, most commonly involving a thin lip which is forced against a flat surface as pressure builds up in the chamber. Pressure energized seals are sometimes initially compressed by pressure from an outside source, after which they become self-sustaining.

a. Closure Seals.

(1) Mechanically energized seals are usually flat or rectangular section and must be clamped with considerable force to maintain their seal when pressurized. The plain gasketed flange shown at Figure 3-27 must have sufficient tension developed in the bolts so that when the internal pressure mechanically deforms the system, the remaining clamping force on the gasket is still great enough to maintain the seal.

(2) The flat gasket seal can be improved by retaining the gasket in a slight recess, then if the pressure moves the gasket radially it stops at the rim and becomes pressurized. See Figure 3-28.

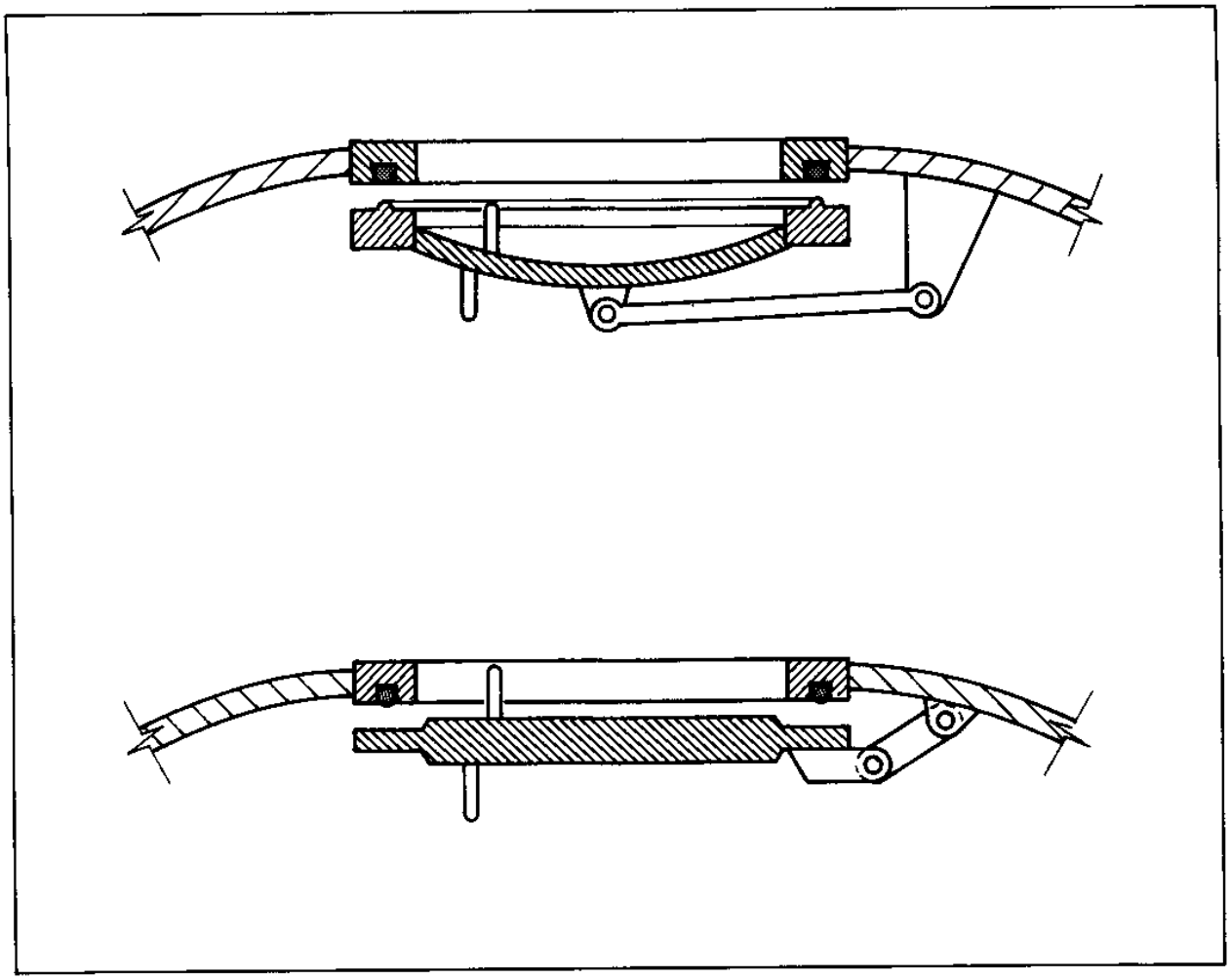

FIGURE 3-26
Compound Hinges

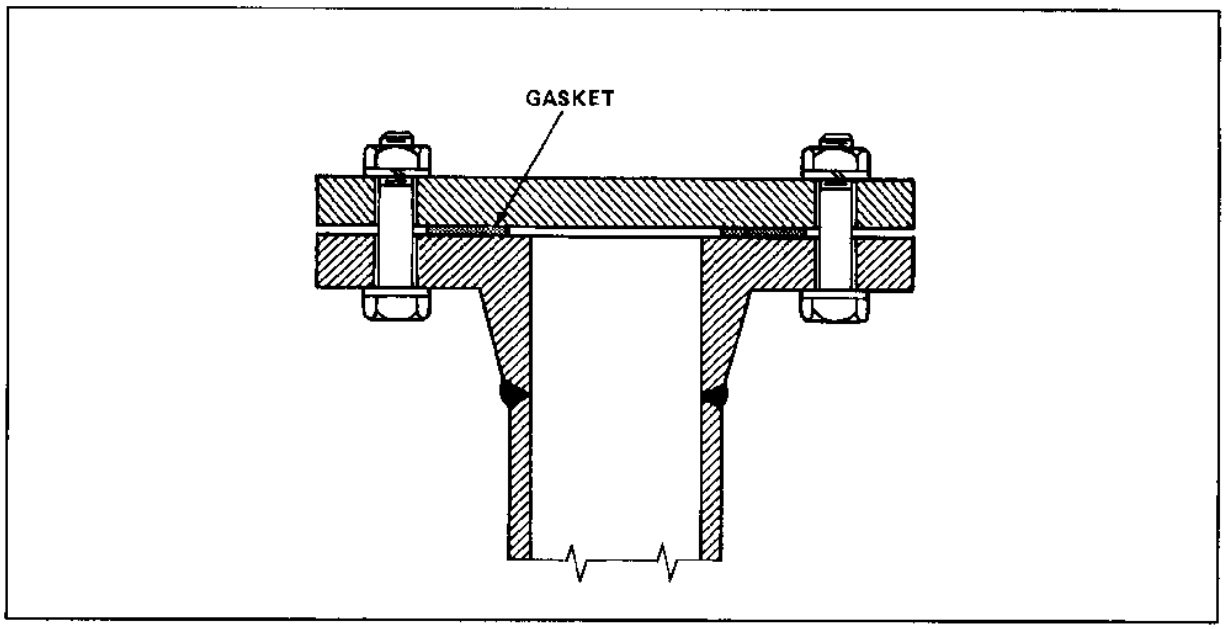

FIGURE 3-27
Conventional Gasketed Closure

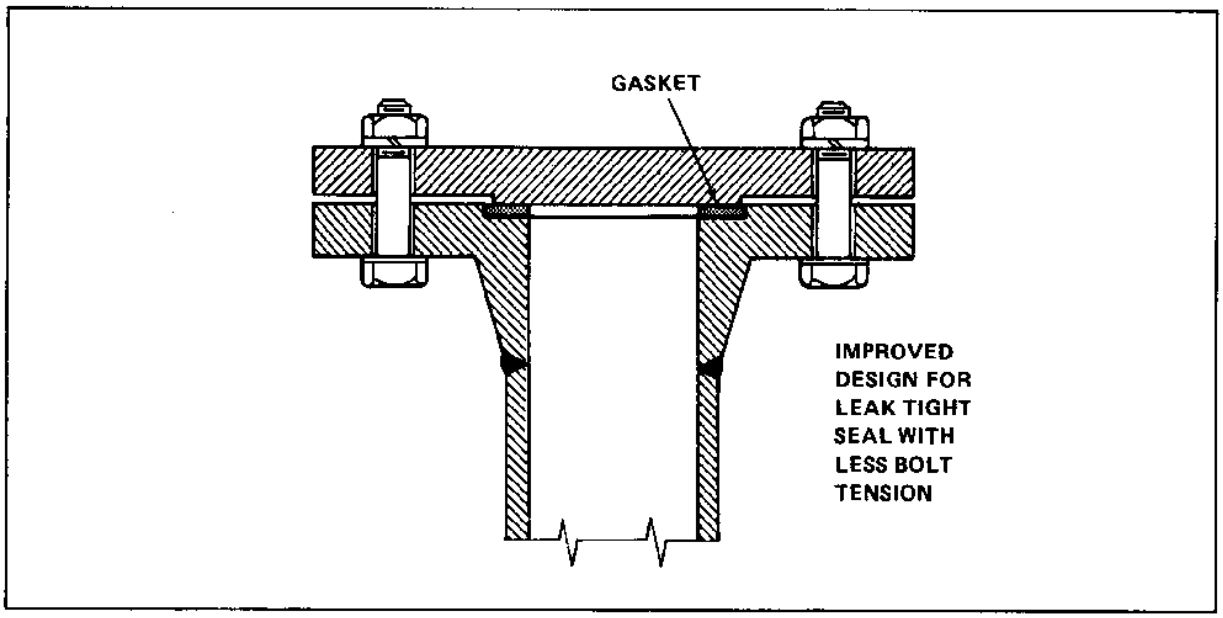

FIGURE 3-28
Gasketed Closure With Recess

(3) The threaded cap closure seal (Figure 3-29) is inexpensive and mechanically simple. Use of an O-ring seal provides automatic radial compression, hence the cap does not have to be tightened to provide the preload to the seal, and a large spanner wrench is not required for removal and installation. Close tolerances must be held to secure the proper compression of the O-ring, and the chances of seal damage during closure are greater than for designs which do not involve sliding against the sealing element.

(4) Threaded Plug Closure Seal. A relatively simple closure which is widely used is the threaded plug. It is readily available, easy to make and can be seal-welded if necessary. A plug in a high pressure gas cylinder is shown at Figure 3-30. Note the use of a seal weld to keep leakage to a minimum.

(5) Flat Face O-ring Seal. A closure or seal which is used extensively in piping systems is the flat face O-ring seal, shown at Figure 3-31. The ring groove is cut in one of two mating flat faces and the assembly is held together by a union nut. A properly made closure of this type will easily seal 2,000 psi when made up hand tight due to the sealing action of the O-ring.

(6) Large Diameter Closure Seal. When large diameter closures are subjected to high pressures there can be considerable movement of the various parts. Under these conditions, the mating clearances can sometimes increase to a gap which defeats the sealing action of the O-ring. To overcome this problem, a Floating Ring Seal is sometimes used. See Figure 3-32. The internal pressure lifts and stretches the metal ring carrying the O-rings and effectively keeps the clearances to zero. A seal of this type is used on the fifteen foot door of the Navy's Ocean Simulation Facility at Panama City, Florida.

(7) Ring Sealed Penetrator Plug. A very convenient way to provide a penetration in a pressure vessel is to use a ring sealed plug, as shown at Figure 3-33. The advantage of this device is that a smoothly reamed hole is all that is needed in the pressure vessel. A spotface on the inside or outside of the vessel shell is not required for sealing and the reamed hole can be made by hand. It is also very easy to change the plug if it becomes damaged or to change the use of the penetration.

b. Door Seals for Compression Chambers.

(1) The most common seal for chamber doors is the rectangular Neoprene packing. It is usually 3/4 x 1 inch and is retained in a groove which is slightly narrower at the top than the bottom. The door has a lip which is forced into the packing by chamber pressure. A seal of this type is shown in Figure 3-18.

(2) Coming into use for chamber door seals is the O-ring, but it is used in a non-standard groove. Normally, an O-ring is held in a rectangular groove with about 15% compression in one direction and with space for lateral movement of at least 50% of the ring section, at 900 to the direction of compression. Under pressure the ring moves to one end of the groove and the sealing action of the groove is activated by the retained pressure.

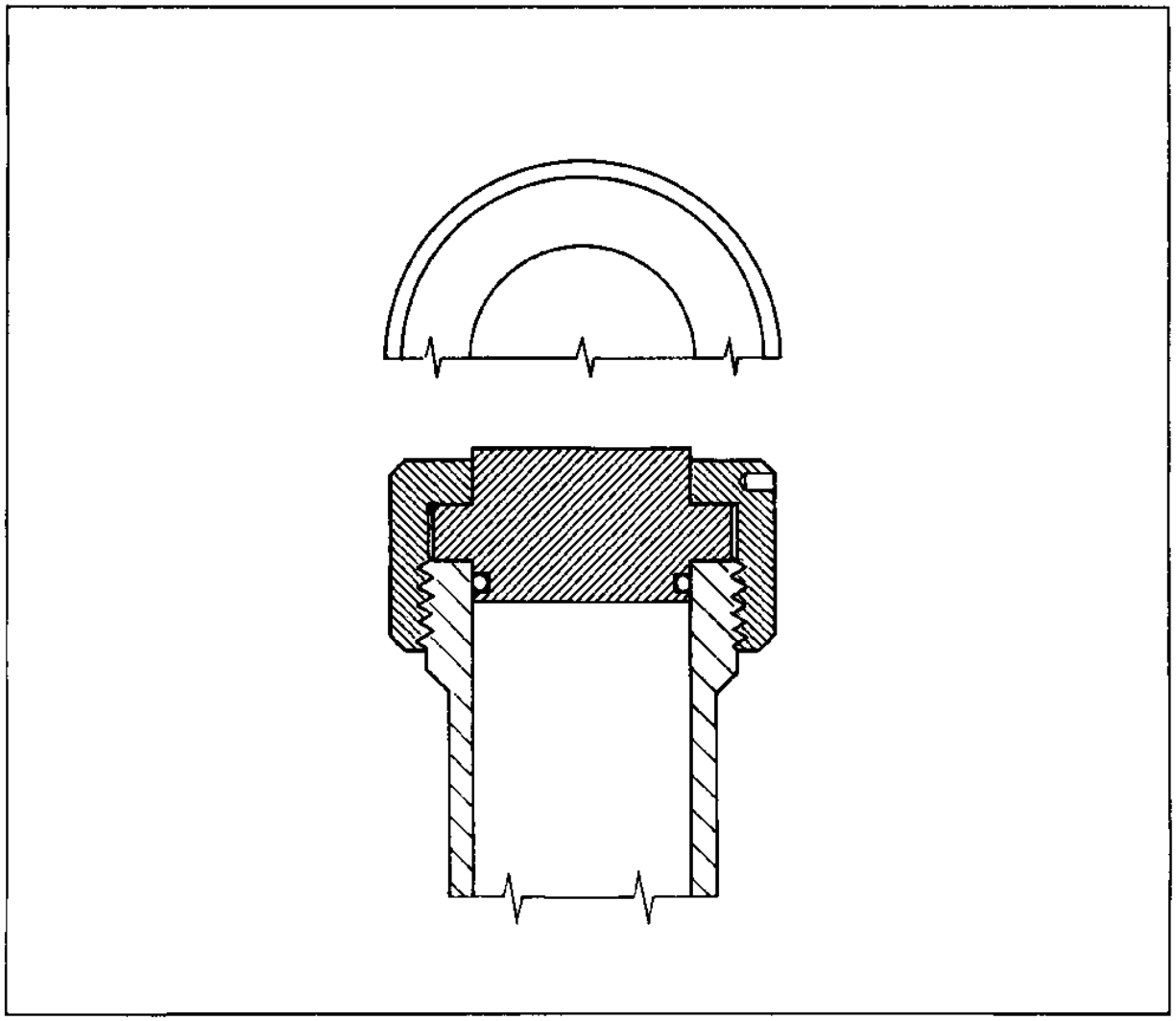

FIGURE 3-29
Threaded Cap Closure

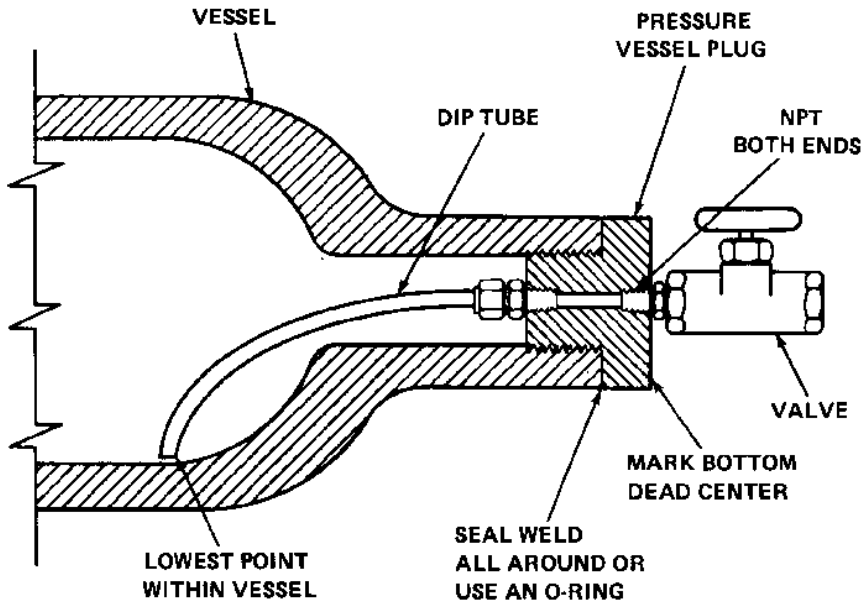

TYPICAL VESSEL DRAIN VALVE INSTALLATION
OPPOSITE FILL END

FIGURE 3-30
Threaded Plug Closure

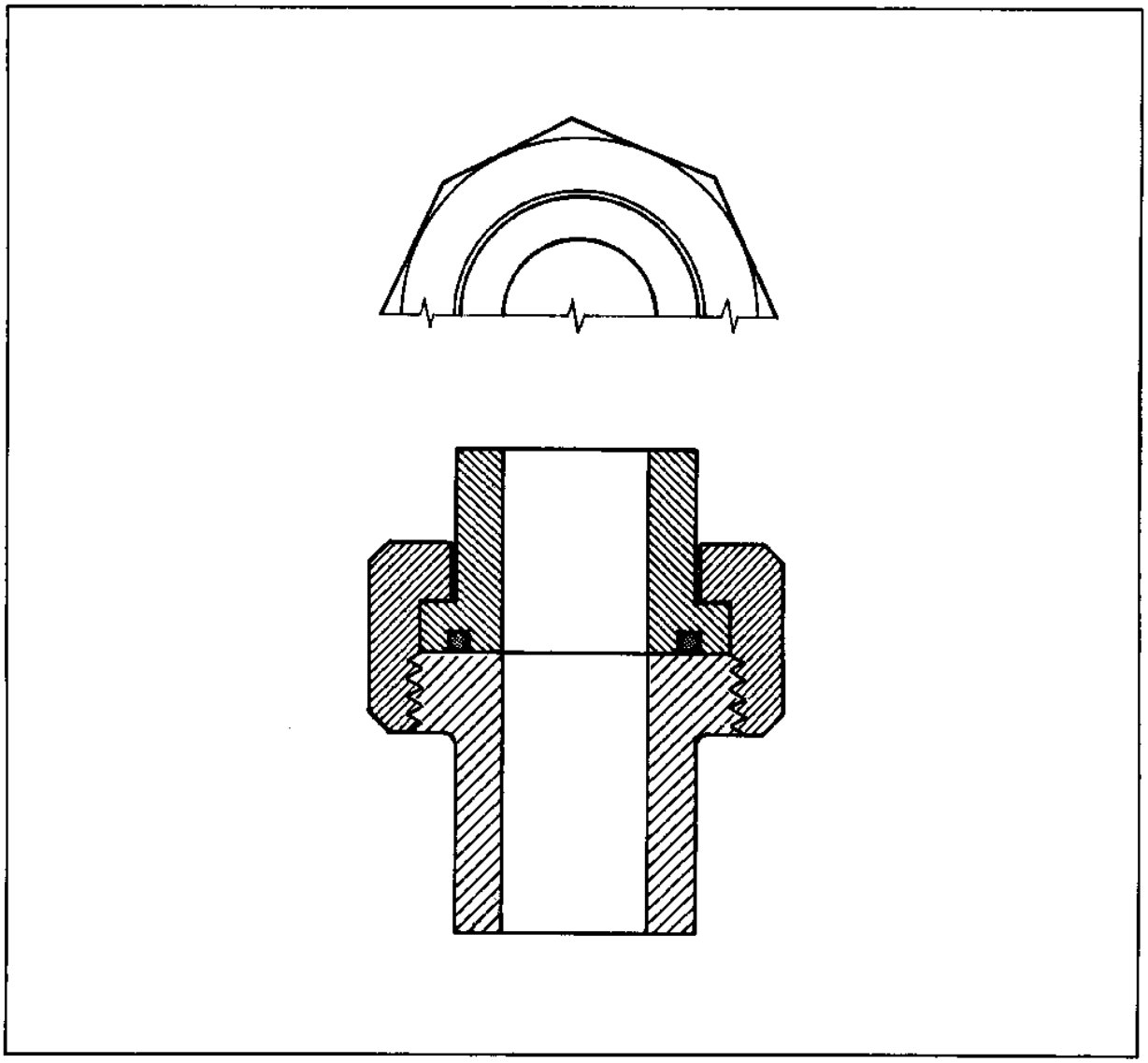

FIGURE 3-31
Flat Face O-Ring Seal Suitable for High Pressure

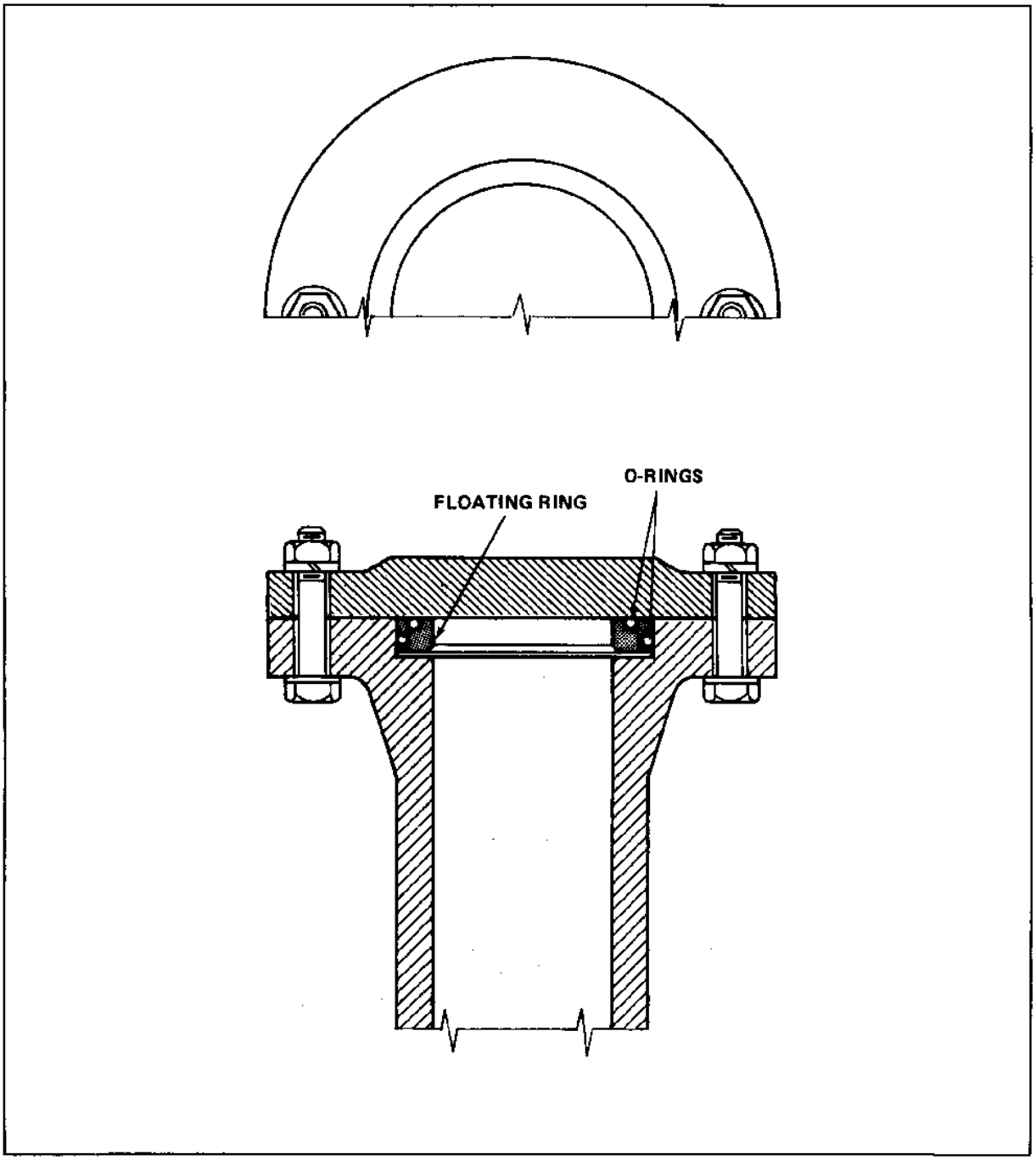

FIGURE 3-32
Floating Ring Seal for High Pressures

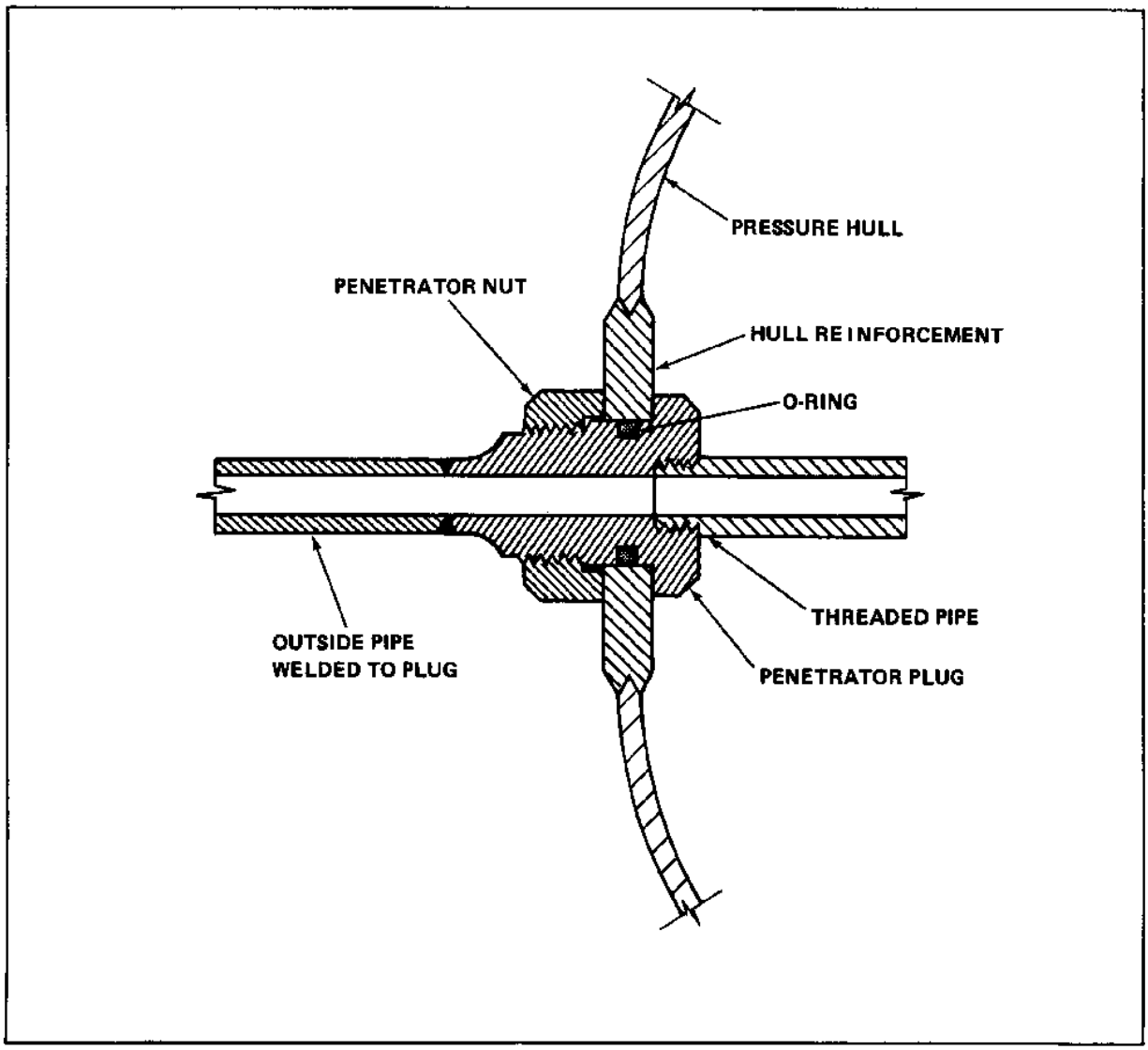

FIGURE 3-33
O-Ring Sealed Penetrator Plug

For chamber doors, the O-ring is retained in a dovetail groove in the door with about 15 to 20% of the ring projecting beyond the face of the door. This seal is illustrated in Figure 3-34.

6. DOOR AND CLOSURE LOCATION. The designer is not afforded much freedom in locating doors for personnel or equipment transfer. The most common location for large doors is at one end of the PV (horizontal entry). This is reasonably convenient for personnel, takes no wall space, and is favorable from the standpoint of pressure-vessel integrity.

If the PV is to be partially flooded for some experiments, a vertical entry hatch is very useful, since personnel can enter and leave the PV without draining it. A vertical entry hatch is also helpful for installing equipment and rigging cables for instrumentation in the PV. Heavy items can be lowered into the vessel with a hoist.

7. LOCK SPACES. A lock space is required on a PV to allow the transfer of personnel or equipment into or out of the PV without depressurizing the work chamber. The lock space must be large enough to accommodate the persons and equipment being transferred together with the opening of the outer and inner doors. The lock space with the outer and inner doors must be designed for the same pressures and pressure differentials as the rest of the PV.

8. SAFETY INTERLOCKS. The use of safety interlocks is recommended on all PV service locks which have a hydraulic, electric or mechanical assist mechanism for opening the service lock doors. The safety interlock must prevent the opening of a door that is under pressure and permit the door to be opened when the pressure on both sides is equal. Although there are many ways to make a safety interlock, the use of hydraulic or electrical methods should only be used to support a basic mechanical system. All service locks should have a pressure gauge mounted on the lock where it is easily seen by the operators.

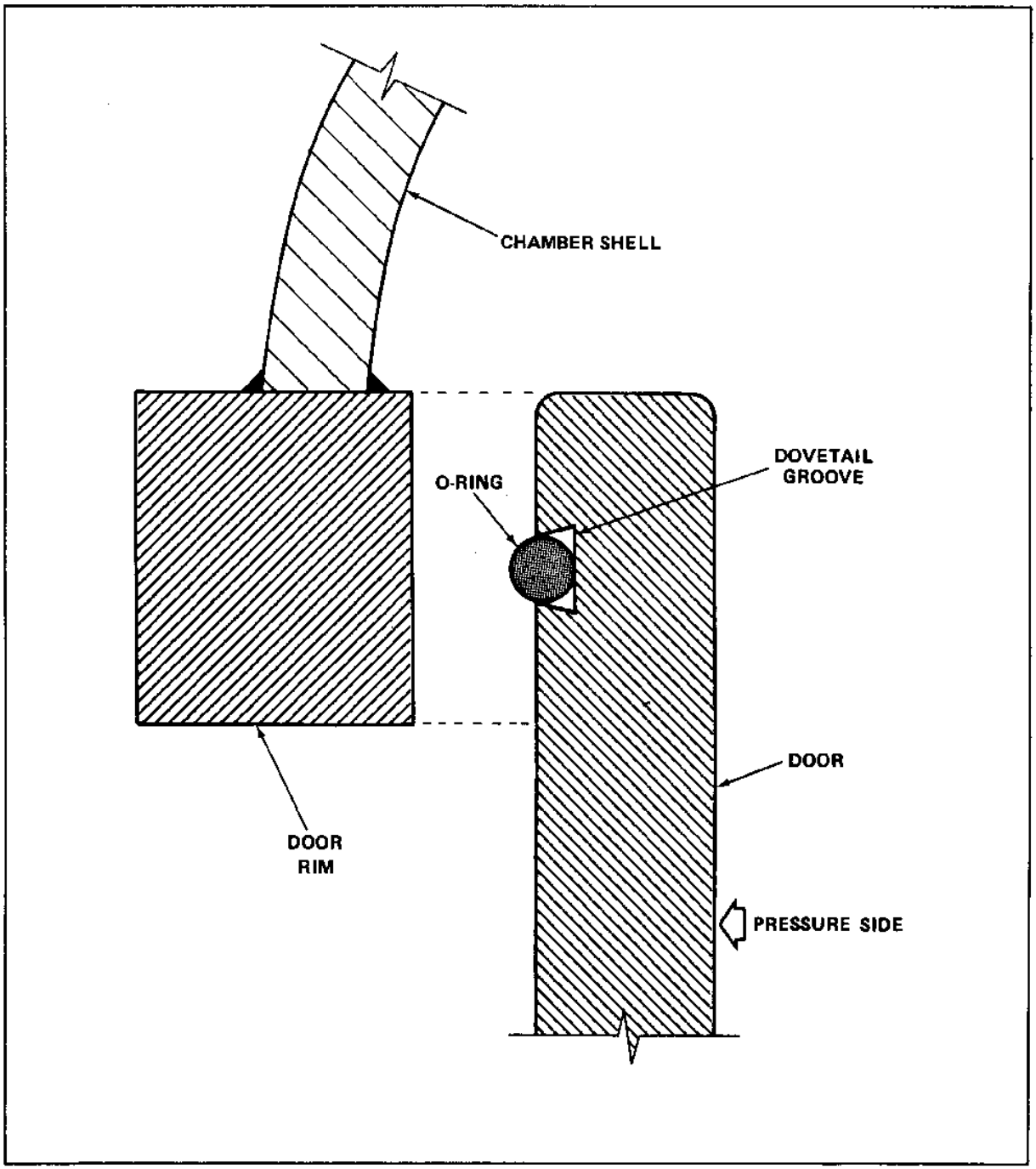

FIGURE 3-34
Chamber Door with O-Ring in Dovetail Groove

Section 3. INTERIOR APPURTENANCES

1. INTERIOR APPURTENANCES. Interior appurtenances including installed equipment and hardware and their surface treatment must keep the risks and hazards in the PV to a minimum.

2. DECK PLATES. Deck plates should be fabricated of lightweight metal, such as diamond tread nonskid aluminum, designed to support live loads of at least 150 pounds per square foot. Deck plates must have handholds for lifting, inspection and cleaning and be held in place by screws.

3. BUNKS, TABLES, SEATS, SHOWER RINGS AND OTHER INSTALLED ITEMS. Bunks, tables, seats, shower rings and other installed items should be fabricated of corrosion and fire resistant materials. All metallic items must be electrically grounded to the PV shell. All movable metallic items must have grounding straps connected to the PV shell. All components used in the PV which require a sealed volume must be suitable for the expected pressure differentials.

4. FABRICS. Only highly fire resistant fabrics such as Duret Gold should be used for clothing, bedding, mattress covers, shower curtains, towels and any other cloth items in the PV. Mattresses must be of the open-cell type.

5. BIB MASKS. Bib masks with supply and exhaust hoses must be manufactured of approved materials.

6. TOILET, SINK, AND SHOWER. Toilet, sink and shower must drain into holding tanks outside the PV. Safety interlocks must prevent flushing of toilet or holding tanks while the toilet is in use.

7. ORDINARY COMPONENTS. Many ordinary components such as faucet handles and shower heads are frequently made of plastics. When such items are used in a hyperbaric chamber they should be metallic, if at all possible. Some items, such as hand-held telephones, are only available in nonmetallic materials. To prohibit the use of such items, which are not highly flammable, in a chamber is impracticable and not necessary.

8. PAINTS. Paints used in the PV interior must be fire resistant and upon curing must not offgas and provide a hazard to the occupants. Phenoline paints and epoxy paints have met these requirements. Surfaces to be painted must be sandblasted to white metal and receive a primer suitable for the intended finish coat. All interior finishes must be allowed to offgas until thoroughly cured. Only white or light tints should be used to enhance the internal lighting. Paints should not be applied to aluminum PV surfaces as it may mask corrosion. Surfaces facing O-rings may be painted using phenoline or epoxy paint or Devcon Z applied by brush to small areas. Large areas should be spray painted.

REFERENCES

1. ANSI/ASME PVHO 1 Safety Standard for Pressure Vessels for Human Occupancy.

2. Stachiw, J.D., Critical Pressure of Conical Acrylic Windows Under Short-Term Hydrostatic Loading, Journal of Engineering for Industry, August 1967, p. 417.

3. Stachiw, J.D., Conical Acrylic Windows for Deep Sea Applications, Undersea Technology, May 1966, p. 42.

4. Stachiw, J.D., Flat Disc Acrylic Plastic Windows for Man-Rated Hyperbaric Chambers at the USN Experimental Diving Unit, Technical Note N-1127, Naval Civil Engineering Laboratory, Port Hueneme, California 93041

5. MIL-STD-1472, Human Engineering Design Criteria for Military Systems, Equipment and Facilities.

6. ONR Report ACR-33 (1958), Arrangement of Groups of Men and Machines, Chapter VIII, Human Engineering Guide to Equipment Design, Office of Naval Research, Department of the Navy, Washington, D.C.

CHAPTER 4 FOUNDATIONS

1. SCOPE. This chapter provides guidance for the site selection, subsurface investigation, and the foundation design for hyperbaric chambers. The foundation and structural support system of a hyperbaric chamber facility must be designed to impose the minimum amount of strain or differential movement in the various chamber components, and these strains must be evaluated so that they may be considered in the design of the chamber components and connections. Sections 1 through 4 of this chapter are directed primarily toward guidance in design and construction of new facilities. Section 5 contains the modifications required to adapt the criteria given in Sections 3 and 4 as well as additional pertinent guidance for construction of hyperbaric chambers within or adjoining existing buildings.

2. RELATED CRITERIA. Specific criteria required for subsurface investigation and design of foundations are contained in the following sources:

Subject	Source
Soil Mechanics	DM 7.1
Foundations and Earth Structures	DM 7.2
Soil Dynamics, Deep Stabilization, and Special Geotechnical Construction	DM 7.3
Seismic Design for Buildings	P-355

SECTION 1. SITE SELECTION

1. REGIONAL STUDY. Site selection requires a regional study to determine the geological origin of the soils and potential for seismic activity that must be considered in foundation design.

a. Geological Factors. A preliminary study must be made of the geological origin of the soils in the various regions under consideration. The principal soil deposits can be classified as residual, sedimentary, alluvial, aeolian and glacial. Generally residual sands and gravels, some alluvial deposits, and glacial tills will be the most favorable soil conditions for foundations.

b. Seismic Activity. Avoid, if at all possible, locating hyperbaric facilities in seismic zone 4. (See NAVFAC P-355 for a description of seismic zones.) Where it is necessary to locate a facility in either seismic zone 3 or 4, particular attention must be paid to the location and character of faults, topography, the potential for tsunamis, bedrock depth and type, and the potential for soil liquefaction. A study of the seismicity of the site including identification of known faults within the immediate region must be included in the regional study.

2. LOCAL STUDY. Evaluation of potential sites within the region must be based on the geology and soil conditions of each site. If possible, sites underlain by loose saturated sands and silts, soft compressible or organic soils, and expansive soils must be avoided.

a. Previous Investigations. Soils maps, geological maps, and previous subsurface investigations will provide local data. A qualified geotechnical engineer should screen potential sites for those having the most favorable soil conditions. The available information on soil type and consistency, groundwater elevations, potential excavation or slope stability problems, and predominant foundation type in the area must be reviewed.

b. Seismic Considerations. Geological and subsurface investigation must be conducted to assure that the site is not located on or near a fault. In seismically active areas, potential for ground rupture, vibration settlements and soil liquefaction must be evaluated by a geotechnical engineer.

SECTION 2. SUBSURFACE EVALUATION

1. SUBSURFACE EVALUATION. This section presents the preliminary design information required to conduct a soil exploration program, typical steps in such a program, and the information to be reported.

2. PRELIMINARY DESIGN INFORMATION. The preliminary design information needed for a soil exploration program includes topographical features, the anticipated loads and their locations, the nature of existing or future adjacent buildings, and expected future conditions.

a. Topographical Features. A complete facility layout sketch showing the anticipated facility size and configuration, its location on the site, the existing grades, the proposed final grades, the anticipated first floor elevation, depth and extent of basement and other subgrade construction, including anticipated minimum footing depths, will be furnished the geotechnical engineer conducting the soils exploration program.

b. Loading. The anticipated loads on individual foundations from supporting structure and chamber components should be estimated, and their relative locations indicated on the layout of the proposed facility. The anticipated loads include the dead load of the building and chamber components, the anticipated live loads on the building floors and roof, the chamber operational cyclic loading such as the weight of water in wet chambers, the movement of transportation equipment and overhead cranes and other moving loads necessary for the chamber operation and expected sources of impact and vibratory loadings.

c. Existing Construction. The facility layout should show the location of underground facilities such as sewers, gas lines, and power lines. Existing buildings, wells, earth fills, excavations, retaining walls, and other types of construction adjacent to the facility are also indicated on the layout.

d. Future Conditions. Planned or potential expansion of the facility or changes in existing facilities should be indicated on the layout.

3. SOIL BORING REQUIREMENTS. A subsurface investigation is required prior to the design and construction of foundations for new hyperbaric facilities. Once a specific site has been selected a program of soil borings, laboratory tests, and an engineering analysis of potential foundation types must be undertaken.

a. Criteria. Complete guidance on subsurface investigations including requirements for boring locations, type and depth is provided in NAVFAC DM-7.1. See Reference 1, ASCE, Subsurface Investigation for Design and Construction of Foundations of Buildings.

b. Number and Spacing of Borings. The number of borings required will depend greatly on the character of the site, the soil stratigraphy, the extent of development in the immediate area and the uniformity of the soil conditions. No specific minimum number of borings can be given for all types of facilities.

For new sites of largely unknown soil conditions, preliminary borings on approximately 200 foot centers are appropriate. For detailed exploration, borings are taken at the corners of the proposed structure with intermediate borings as necessary for refinement of the soil profile.

c. Depth of Borings. All borings must extend through soft, compressible or otherwise unsuitable material into firm strata. A general rule of thumb for boring depth is to carry borings to such depth that the net increase in soil stress under the weight of the structure is less than 10% of the average load of the structure. In applying this guideline, the increased soil stress can be calculated using Boussinesq type equations given in NAVFAC DM-7.1. Generally all borings should be no less than 30 feet in depth. Where deep excavations are anticipated, borings must be extended to at least 1.5 times the expected depth of excavation.

d. Procedures. The most frequently used procedures for completing borings and obtaining soil samples in the field are detailed in two American Society for Testing and Materials (ASTM) standards.

So called "standard" sampling, in which disturbed samples are obtained for soil classification and identification tests, is covered by ASTM D 1586 (see Reference 2). Undisturbed samples suitable for soil shear strength and consolidation testing must be obtained using a thin-walled sampler. One frequently used standard procedure is described in ASTM D 1587 (see Reference 3).

4. LABORATORY TESTS. Detailed information on the Unified soil classification system, index property tests and structural property tests are provided in NAVFAC DM-7.1. The laboratory testing program must be directed by a qualified geotechnical engineer.

SECTION 3. FOUNDATION ANALYSIS AND DESIGN

1. SETTLEMENT. The primary consideration in the design of foundations for a hyperbaric facility is that of limiting settlement to a tolerable amount.

a. Initial Settlement. Initial settlement of the foundation is likely to occur early in the construction phase prior to the time that the pressure vessel is installed and placed in service. Except in loose sands or gravels, initial settlements are not usually significant.

b. Primary Settlement. After the structure is complete and the pressure vessels installed, primary settlement of the foundation is likely to occur due to consolidation of soft materials such as silt and clay. The magnitude of the primary settlement and the period of time over which it occurs are critical factors in determining the total and differential settlement between individual footings and the resulting strain which is induced in the pressure vessel and connected components.

c. Secondary Settlement. Secondary settlement may occur after completion of primary settlement and may be significant in soils containing a high percentage of organic material.

d. Cyclic Loadings Settlement. Temporary or permanent settlements may be induced by cyclic loadings such as filling and emptying of wet pot pressure vessels and movement of heavy equipment on floors supported on a foundation common to the pressure vessels or common to other components of the facility.

e. Vibration Settlement. Vibration settlement may occur in soils which can be consolidated by vibration such as loose sand and gravel. Seismic loading, heavy vehicle traffic, or operating machinery may cause the vibrations.

f. Water-affected Settlement. Fluctuations in ground water levels, whether natural or induced through pumping or draining operations, may cause settlement and must be considered in the settlement evaluation. Lowering of the ground water table increases the effective soil weight which results in consolidation of the soil.

2. SETTLEMENT ANALYSIS. Settlement analysis must be conducted by a qualified geotechnical engineer using the procedures in NAVFAC DM-7.1, Chapter 5. No specific limits can be established for the maximum amount of tolerable settlement. However, for hyperbaric facilities, maximum differential settlements between individual footings has been determined to be:

[DELTA]/L < / = 1/1750

where [DELTA] = maximum differential settlement between adjacent footings

L = spacing between footings

3. FOUNDATION TYPES. The foundation design will probably incorporate one or more of the following four basic types.

a. Individual Spread Footings. Spread footings are usually the most economical type of foundation. Their design, depending upon the soil bearing capacity and the predicted settlement characteristics, considers one of the following two situations:

(1) The footings will be proportioned for equal bearing pressure under total dead and live load. Ordinarily, this procedure is adequate.

(2) Should the soil foundation investigation and settlement characteristics so indicate, individual footings may be proportioned for uniform pressure under dead load only so as to have uniform initial and time dependent settlements under dead load. Differential settlements are determined by evaluation of the live loading conditions. The supporting structure, the chamber, and its components should be designed for the movements and deflections which take place.

b. Mat or Raft Foundation. A mat or raft provides structural rigidity. A mat foundation will impose the minimum bearing pressures on underlying soils and will bridge isolated zones of weak or compressible materials.

c. Pile Foundation. Piles may be friction, end-bearing, or, as most frequently the case, supported by a combination of skin friction and end-bearing. Pile foundations are used to carry loads through compressible soils or soils of low bearing capacity to deeper strata of higher bearing capacity. The following are considered in the design analysis of pile foundations.

(1) Evaluate the effect of the impact and vibration resulting from driving the piles.

(2) When seismic loading is a consideration in the design, evaluate the lateral force on the piles and pile caps, batter the piles in at least three directions, and adequately connect piles to the pile cap.

(3) The differential settlement between pile groups may become significant if the length of piling differs substantially from one group to the other, or if the material upon which they bear differs substantially.

(4) The piles can be overloaded if negative friction, resulting from settlement of soft or loose overburden, has not been accounted for in the design.

(5) The predicted load capacity of the piles and their settlement characteristics should be substantiated by conducting load tests on a test pile.

d. Caisson Foundations. Design considerations for caisson foundations are similar to both spread footings and pile foundations in many respects. The primary difference between caissons and spread footings is that caissons are normally founded at a greater depth because they are useful in penetrating

thick and unsatisfactory overburden material to reach suitable bearing material. The primary difference between caissons and pile foundations is the construction procedures used to penetrate soft or loose overburden material. Piles are usually driven whereas caissons are usually excavated by drilling into the ground. In addition, as opposed to driven piles, caissons may also have their lower ends enlarged by belling if the bearing strata is sufficiently stable to permit this operation.

4. FOUNDATION TYPE SELECTION. Consider the following factors in making the final foundation type selection:

a. Design the hyperbaric facility to compensate for soils which could Allow excessive differential settlement after the chamber is completed, by:

(1) Designing the chamber, its components and supporting structure, for the estimated differential movements.

(2) Supporting all sensitive components on a common foundation such as a raft or mat foundation designed to provide adequate stiffness.

(3) Using an extended foundation such as piles or caissons to reach a soil-bearing strata which is sufficiently stable.

b. If hydrostatic uplift due to ground water pressures must be resisted, the facility must have adequate dead weight to resist the uplift or it must be anchored to an extended foundation which can mobilize sufficient soil below the facility to resist the uplift. In either case, the dead weight plus anchorage, If any, should exceed the uplift by an acceptable margin.

SECTION 4. STRUCTURAL SUPPORTS

1. STEEL AND CONCRETE STRUCTURAL SUPPORTS. Structural supports are those portions of the framing system which support the various chamber components and transfer their dead and live loads to the foundations. It is important that the support system be rigid so as to support the chamber and its components with as little differential movement as possible. The induced strains resulting from the differential movements must be within the allowable strain capacity of the chamber and its components. Although the chamber and support systems are within themselves rigid, the interface between them must be compliant to allow for "growth" of the chamber when pressurized.

The design of the structural support system should be predicated on two construction materials, namely; structural steel or reinforced concrete. Many modern variations and combinations of design and construction methods using these two materials are available. Various design parameters for these two materials are discussed in the following paragraphs.

Regardless of the structural support system selected, future expansion should be evaluated for its effect on the deflection and movement of the structural support system for the then existing facility.

2. DESIGN PARAMETERS COMMON TO BOTH CONSTRUCTION MATERIALS.

a. Vertical Deflection. In either of the two framing materials mentioned above, the differential deflections or movements from vertical loads must be evaluated in the final design of the structural support system. Differential movements within the structural supports produce corresponding strains in the chamber components. The design of affected components must include an analysis of these strains and resulting stresses.

Consideration should also be given to the possibility of settling of the foundations requiring shimming of the chamber for realignment. A means of monitoring (collimating) the chamber movement is also desirable.

b. Lateral Displacement. Study the lateral displacement or side sway of the structural support framing, and evaluate the following loading conditions:

(1) Wind load on the entire structural frame or exposed components of the structural support system or the chamber components themselves.

(2) Lateral forces induced by earthquake loading for facilities located in earthquake zones.

(3) Lateral deflections or displacements resulting from unbalanced live loading on the chamber components or on the surrounding service floor areas.

c. Induced Vibration. Evaluate the sensitivity of the structural supports to vibration induced by the operation of the chamber components or supporting auxiliary equipment, such as moving cranes and other equipment likely to be operating on the service floor areas around the chamber, for:

(1)The effects upon the operation of the sensitive equipment within the chamber, and

(2) The effects upon relatively flexible piping or other connections between various components of the chamber.

d. Fatigue Strength. Evaluate the fatigue strength if stress reversals or large changes in stress magnitude occur frequently due to the operation of the chamber components or its auxiliary support equipment.

3. DESIGN PARAMETERS PECULIAR TO EACH MATERIAL.

a. Structural Steel. When the facility is designed of structural steel, consider the following parameters as they relate to the response of the structure, and its effects upon the chamber and its supporting equipment.

(1) Joint slippage in bolted connections should be avoided by conservative design and the use of high strength bolting designed for friction type connections.

(2) The use of high strength steels should be studied in regard to their total deflection and rigidity before being incorporated into the final design. Deflection is directly proportional to the bending stress so the use of high strength steel results in correspondingly higher strains being induced into the chamber and its components.

(3) Depending on the area climatology, and the design and use of the facility, the thermal effects upon the framing should be evaluated. Detrimental movements may result from thermal expansion and contraction of the chamber components and the steel framing itself.

(4) The corrosion of the structural steel may be a problem in coastal regions where the steel framing is subjected to salt air environment or in areas with high industrial air pollution incorporating corrosive agents.

b. Reinforced Concrete. When the facility is designed of reinforced concrete, consider the following parameters as they relate to the response of the structure and its effects upon the chamber and its supporting equipment.

(1) In addition to normal initial deflection under application of load, reinforced concrete will continue to deform or creep for several months or even years after the load has been applied. This time dependent movement must be taken into account in the design of the structure in much the same manner as that used for considering the differential settlement in the foundations.

(2) Reinforced concrete will shrink as the concrete dries, either naturally or at an accelerated rate due to a heated environment in which it is enclosed. Shrinkage warping is a movement similar to load deflection and is a potential source of strain upon the chamber or its components.

(3) Reinforced concrete framing may also swell by taking on moisture from the air when the humidity fluctuates widely or when the concrete is immersed in free water. This change in volume has the same basic effects as those described for shrinkage in Paragraph (2) above. However, this is usually not a problem since swelling tends to be counteracted by creep deformation.

(4) Reinforced concrete framing, particularly for facilities in an earthquake zone, must be carefully detailed for continuity between various elements such as the floor slabs, beams, and columns to provide for sufficient ductility to safely resist lateral loads induced on the framing.

(5) Reinforced concrete framing must also be evaluated for its serviceability in regards to the amount of anticipated cracking which will occur under normal dead load and live loading and the resulting affect upon the appearance of the structure as well as the affect upon the deflection and displacement characteristics of the structure as it changes from a noncracked to a cracked section design criteria.

(6) Although not as likely as in the case of structural steel framing, the corrosion of reinforcing within the concrete due to exposure to salt air or industrial air pollutants can be of considerable importance in the structure particularly if severe cracking of the concrete occurs or insufficient concrete cover is provided over the reinforcing steel.

(7) In prestressed concrete members, elastic shortening of the members and time-dependent movements inducing camber can cause additional design problems in the support framing. Member shortening and camber affect the performance of the structural support system and may result in differential movements which cause additional strains in the chamber or its components.

(8) Depending upon the area climatology, and the degree of exposure of concrete framing, the thermal effects upon the framing should be evaluated. Because of concretes' greater mass this is not as critical as it is for structural steel for short term variations in temperature but can be a factor under seasonal variations.

SECTION 5. INSTALLATION IN EXISTING BUILDINGS

1. SOIL-STRUCTURE INTERACTION. The primary soil-structure interaction concern for a hyperbaric facility installed in an existing building, is essentially the same as for a completely new facility, as outlined in Section 3. The same six settlement parameters discussed in Section 3 are applicable but the degree to which each is of concern varies from that of a completely new facility as outlined below.

a. Initial Settlement. The initial foundation settlement, which occurs early in the construction phase of a facility, will for all practical purposes have taken place prior to the installation of a hyperbaric chamber in an existing building. The only consideration necessary in regard to initial settlements will be the necessity to compensate for any differential settlement in establishing the bearing elevations of the various chamber components.

b. Primary Settlement. When a hyperbaric chamber facility is installed in an existing building, the primary settlement may or may not be critical depending upon several factors as follows:

(1) The most significant factor will be the primary settlement characteristics of the bearing material upon which the existing building foundations are founded and the age of the structure. A relatively new structure may still be undergoing primary settlement while an older structure will probably have sustained all or nearly all of its primary settlement.

(2) The relative magnitudes of the existing building loads and the anticipated new loads from the hyperbaric chamber will also have an affect upon the primary settlement. Significant increases in the total foundation loading, as a result of the hyperbaric chamber installation, will more than likely induce some additional primary settlements in even relatively old structures in which the primary settlement has stabilized under present usage.

(3) The type or types of foundations upon which the existing building rests will be significant with respect to the primary settlement and its effects upon the hyperbaric chamber and its components as discussed in Section 3.

c. The other parameters outlined in Section 3, namely, Secondary Settlement, Cyclic Loading Settlement, Vibration Settlement, and Water Affected Settlement will be essentially the same for either a hyperbaric chamber installed in an existing building or for a completely new facility.

2. FOUNDATION TYPES. When a hyperbaric chamber is installed in an existing building and the existing foundation structure is to be used to support the chamber, then essentially two factors must be evaluated as follows.

a. The strength or bearing capacity of the foundations, regardless of type, must be adequate for the existing structure dead load and the additional
load from the hyperbaric chamber and its support equipment.

b. The settlement characteristics of the existing footings must be

evaluated as outlined above for the new loading conditions.

When the installation requires the utilization of existing foundations and completely new foundations for certain portions of the chamber, then the foundations must be evaluated differently. Essentially, the existing foundations must be evaluated as outlined in the two steps above but the new foundations must be completely evaluated in accordance with the criteria outlined in Section 3.

3. STRUCTURAL SUPPORTS. The evaluation or design of the structural support system is essentially the same whether the hyperbaric chamber is installed in an existing building or is completely new construction. Design parameters such as the strength capacity of the individual members and of the entire framework, vertical deflection, lateral displacement, vibration response, and fatigue strength must be evaluated in either case. The relationship between the old structure loading and the new loading resulting from the hyperbaric chamber must be compared and the necessary modifications to the framework designed. The following design parameters listed in Section 5 for concrete structures may or may not be of importance depending primarily upon the age of the existing structure.

a. Concrete drying shrinkage effects and creep effects may be of significance if the existing structural framework is relatively new. However, if the framework is at least a year old these parameters, which are peculiar to reinforced concrete, will probably have nearly reached a point of stability. New loading, in excess of the loading to which the building was originally subjected, will contribute to additional creep deflection however and must be evaluated accordingly.

b. Similarly, in the case of prestressed concrete structures, the elastic shortening and camber in the prestressed members will probably have reached a point of stability if the structure is at least a year old. When the installation of the hyperbaric chamber results in an increase or decrease in total load on members of this type, then additional creep deflection or camber may occur. Evaluation of these considerations are the same as discussed in Section 4.

REFERENCES

1. ASCE Subsurface Investigation for Design and Construction of Foundations of Buildings

2. ASTM Standard D 1586

3. ASTM Standard D 1587

CHAPTER 5. PIPING

Section 1. PIPING SYSTEMS

1. SCOPE. This chapter provides technical information and guidance for the design, fabrication, and testing of the piping of hyperbaric systems. This includes the complete network of all piping, fittings, and other components required to conduct and control fluid flow in the various systems. Items such as pumps, compressors, and pressure vessels are not included in this chapter except as anchor points in flexibility and stress analysis.

2. PIPING SYSTEM CLASSIFICATION. The design of piping systems for hyperbaric facilities is complicated by the wide variety in type and criticality of piping and the large number of military, industry, state, and local codes that may be applicable to some or all of the piping. Systems in hyperbaric facilities are divided into four hazard categories in accordance with MIL-STD-882, System Safety Program Requirements (Reference 1) by the seriousness of the results of a component failure as follows.

a. Category I System. In this system, a component failure will result in extreme danger to the PV occupants and possibly to the facility operators. The probability of fatalities is very high. Example: Major rupture of breathing gas inlet connection.

b. Category II System. In this system, a component failure will result in the need to abort the operation or take immediate corrective action. Example: Massive leak in the life support loop which removes CO_2.

c. Category III System. In this system, a component failure will have only a minor effect on the PV occupants. The operation can continue with some inconvenience. Example: Breakdown in the potable water system.

d. Category IV System. In this system, a component failure will have no significant effect on the system operation. Example: Breakdown in the water supply to the wet pot.

The piping system is classified in this fashion because the procedures required for the design, fabrication, testing, maintenance and repair or modification, varies for each hazard category, to insure the optimum safety level for the system occupants and operators.

The design, fabrication, and testing of Category I and II systems must conform at least to the ANSI B 31.1 Code for Power Piping (Reference 2). Category III and IV systems must conform to military building and construction piping codes such as NAVFAC TS-15401 Plumbing of July 1980 (Reference 3).

Table 5-1 indicates briefly the codes, specifications, and standards which are applicable to the various hazard categories and systems.

TABLE 5-1

Hyperbaric Facilities — Applicable Codes, Specifications, and Standards

PURPOSE	PRESSURE VESSEL	CAT. I&II PIPING SYSTEMS	CAT. III PIPING SYSTEMS	OXYGEN PIPING	FIRE EXTING SYSTEMS	ELECTRICAL SYSTEMS	LIFE SUPPORT ITEMS
DESIGN	SECTION VIII DIV. 1 & 2 DM-39	B 31.1 SECT VIII 1 & 2 MIL-STD 438 MIL-STD 777	B 31.1 MIL-STD-777 DM-39	B 31.1 DM-24 NFPA-50-1	NFPA-56-D,E DM-39	NFPA-56-D,E NFPA-70 DM-39	NAVSEA 0994-LP-DN-9010 MIL-STD-777 DM-39
FABRICATION/ INSTALLATION	NAVSHIPS 090-006-9010 NAVSHIPS 0900-000-1000 MIL-STD-278 MIL-STD-1693(YD)	B 31.1	B 31.1	SHIPS 0900-01-7000 MIL-STD-777 B 31.1	MIL-STD-777 NAVFAC 53Y B 31.1	NFPA-70	B 31.1
CLEANING TEST FOR CLEAN		SHIPS 9230.12A 9230.15 P-9290	SHIPS 9230.12A 9230.15 P-9290	SHIPS 9230.12A 9230.15 P-9290 MIL-STD-1330 MIL-STD-1359 (AS)	SHIPS 9230.15 P-9290		SHIPS 9230.12A 9230.15 P-9290
HYDROTEST	SECT VIII 1 & 2 DM-39	B 31.1	B 31.1	B 31.1	B 31.1		B 31.1
PNEUMATIC TEST	SECT VIII 1 & 2	B 31.1	B 31.1	B 31.1	B 31.1		B 31.1
RADIOGRAPHY	ASME V MIL-STD-453	B 31.1	B 31.1	B 31.1	B 31.1		B 31.1
ULTRASONIC MAG. PARTICLE DYE PENETRANT	ASME V MIL-I-6868 MIL-I-6866	B 31.1	B 31.1	B 31.1	B 31.1		B 31.1 MIL-I-6868 MIL-I-6866
PAINTING COLOR CODE LUBRICANTS GAS CYLINDERS MATERIAL	NAVSHIPS 0994-014-5010 NAVSHIPS TECH MAN. CHAP 9450	P-9290 MIL-STD-101 T.M. CHAP 9450 MIL-STD-438 MIL-STD-777	P-9290 MIL-STD-101 T.M. CHAP 9450 WWP-406 MIL-STD-777	P-9290 MIL-STD 101 T.M. CHAP 9450 MIL-T-1368 MIL-T-15420	P-9290 MIL-STD-101 T.M. CHAP 9450 FAC-53-Y MIL-STD-777		T.M. CHAP 9450 MIL-F-22606

Section 2. DESIGN CONSIDERATIONS

1. SEQUENCE. The process of piping system design will normally proceed in the order listed below. Many reiterations will be required before a satisfactory system design is completed.

a. System schematic.

b. Fluid flow analysis and capacity.

c. System pressures determination and preliminary assignment of hazard category.

d. Material selection (including economic factors).

e. Structural adequacy.

f. Vibration and fatigue.

g. Maintenance (including cleaning).

h. Special considerations.

2. PROCEDURES.

a. The system schematic diagram which can also be called the piping network, is a single line diagram showing all the interconnecting pipes required to move the gasses or liquids from their point of supply to the storage location then to their usage site and finally the means of disposal, if required.

b. The fluid flow analysis will determine the fluid flow rates or capacities, pressures, characteristics, approximate pipe lengths and inside diameters, control valves and redundant or bypass piping required.

c. System pressure analyses will use the maximum operating capacities and pressures with maximum and minimum temperatures to determine the nominal pipe wall thickness, pipe fittings, and valves required, and to initiate hazard assignment.

d. Material selection for pipes, fittings, and valves will be made based upon consideration of the following factors.

(1) System hazard category.

(2) Experience with the materials.

(3) Compatibility of materials with contained fluids.

(4) Compatibility of pipe materials with adjoining materials.

(5) Compatibility of materials with the environments.

(6) Engineering and fabrication properties of the materials.

(7) Cost effectiveness of the materials.

e. Structural adequacy analysis must consider all possible loading of the system including the following:

(1) Internal pressures during normal operation.

(2) Manual force during valve operations.

(3) Axial and radial pressures during system testing.

(4) External pressures and possible accidental loads during repairing adjacent piping.

(5) External pressures and spacing of rigid supports of pipes and tubes.

f. Fatigue due to vibration of components can cause fracture in the piping system. Sway braces or vibration dampeners to control the movement of piping caused by vibration, as specified in ANSI B 31.1 Code for Power Piping, Paragraph 121.2.5 (Reference 2), should be considered.

g. Maintainability and provision for thorough cleaning must be planned and shown on the piping design drawings. During conventional commercial construction this problem is usually ignored or left to the best effort of the pipe contractor’s draftsman when he makes the pipe "shop drawings" and to the knowledge and skill of the plumber when he is doing the on-site fabrication of the system. This procedure should be avoided.

Piping runs must be planned in neat orderly groups with in-line valves, filters, pressure gauges, and regulators located so that they may be serviced, maintained, repaired, and removed, if necessary, without the need to dismantle large sections of the system. Also pipe runs should not interfere with other systems.

Since hyperbaric piping must be frequently cleaned or checked for cleanliness, the installed pipe should have planned high points with gas bleeds for venting and low points with draining provision built in. It should be possible to dismantle the entire piping system in large sections without damaging hardware. This is particularly true of pipes which carry high percentages of oxygen.

h. Special consideration must be given to:

(1) Routing of each pipe run and selection and location of each pipe support.

(2) Selection and location of each fitting and valve. Within practical consideration, working components of the system must be located so that operators do not have to climb on the hardware, use ladders, or stand on stools to operate the complex.

(3) Thermal insulation when required.

(4) Hazard category of each pipe run.

Section 3. PIPING SYSTEM MATERIALS

1. MATERIALS. This section provides guidance for the selection of materials to be used in piping systems and piping system components for hyperbaric facilities. Consideration must be given to the compatibility of the contained fluid to the pipe and the pipe to its environment, and also to the hazard category assigned to the system (as described in Section 1 of this chapter). The material selections are based primarily on past performance in marine environments and hyperbaric systems. Acceptable materials for hyperbaric piping systems are divided into 3 classes based on the known performance of the material in various environments.

2. CLASSIFICATION.

a. Class 1 materials are those which have demonstrated a high level of reliability during extensive use in service conditions very similar to the proposed application. Some examples of Class 1 piping materials are listed in table 5-2.

b. Class 2 materials are those which have not been used extensively in similar applications but are classed as conventional due to identification by military specifications, federal specifications, or recognized American commercial standards. Materials or components available as standard stock items built to a recognized commercial or Federal standard will be considered in this category. Examples of materials and components that are presently considered to be in this category are certain types of aluminum, titanium, and some high-strength low-alloy steels. The determination of acceptable properties and allowable operating stress values will be based on the recommendations and supporting information provided by the designers.

c. Class 3 materials are those which have little or no operational or use experience for hyperbaric piping systems such as ceramics, plastics, glass or any combination of these, and metals for which there has been limited fabrication experience for pressure-containing components. With the exception of some plastics, they are generally characterized by low-ductility and high-strength properties.

3. APPLICATIONS. All 3 Classes of materials may be used for all hazard categories of hyperbaric chamber piping systems, based on the need for special characteristics. However, it is recommended that only Class 1 or Class 2 material be considered for piping or components in a hazard category I or II system. When using Class 1 material the only documentation required is the certificate of chemical and physical properties, provided by the supplier to the purchaser. It must be requested when the order is placed. This certificate gives the actual properties of the specific section of pipe delivered.

TABLE 5-2
Class 1 Piping Materials

MATERIAL/ITEM	SHAPE	SPECIFICATION
Stainless Steel	Pipe	ASTM A-312 Alloys Grs: TP310 & 316
	Forgings	ASTM A-336
	Flanges & Fittings	ASTM A-350
	Castings	ASTM A-352
Ni-Cu (Monel)	Cast	QQ-N-288
	Wrought	QQ-N-281
	Tubing	MIL-T-1368 Class A, ASTM B-466
70/30 Cu/Ni	Cast	MIL-C-20159
	Wrought	MIL-C-15726 ASTM B-402, Alloy 715
	Tubing	MIL-T-16420 ASTM B-466, Alloy 715
Valve Bronze		MIL-B-16541 ASTM B-62 ASTM B-61
Seawater Valves		MIL-V-24287
Aluminum Bronze (min. 4% Ni)	Cast	MIL-B-23921 ASTM B-271
	Wrought	MIL-B-24059
Oxygen Bottles		MIL-F-22606
These are Class 1 materials only when fabricated and tested to appropriate specifications		

The use of Class 2 material in systems of hazard category I or II requires the suppliers certificate supplemented by specific information to assure reliability in the particular application.

When Class 3 materials are to be used in hazard category II or III systems, additional justification in the form of documentation and material test reports is required. Hazard category IV systems may be made up of commercially-available materials and components without special documentation.

a. Justification of Class 2 Materials. As a minimum, the following information will be necessary to justify the use of a Class 2 material in category I or II piping system.

(1) The applicable Military, Federal, or commercial specification involved with a list of exceptions or additions.

(2) Tensile properties, including ultimate tensile strength, tensile yield strength, percent elongation, and reduction of area.

(3) Impact and fracture toughness properties over a range of temperatures sufficient to define fully the fracture characteristics of the material for the intended service environment. The material's fracture toughness properties in a marine environment should be adequate for its intended use.

(4) Proof of weldability and fabricability, if fabrication process includes welding, and qualification of welding procedures will be required.

b. Justification of Class 3 Materials. Submit at least the following information to justify the use of a Class 3 material in a hazard category I or II system.

(1) Material chemistry requirements.

(2) Material mechanical properties.

(3) Basic process to be used in producing the material. Sufficient information is required to demonstrate that the procedures insure that repeatable properties are obtainable by the process used.

(4) Resistance to shock loading, such as might be produced by accidental blows on the system while pressurized.

(5) Effect of flaws, such as cracks or other discontinuities, on material performance.

(6) Effect of temperature on material performance and notch toughness.

(7) Results of tests-to-destruction of samples fabricated from the materials, and comparison of these results with the design basis predictions of the failure point.

(8) Wet or dry fatigue data in the high-strain, low-cycle range (less than 10,000 cycles) in environments; for instance, sea spray, air, helium-oxygen, water immersion, etc.

(9) Data, covering an extended time period, justifying the adequacy of the material with respect to general corrosion and to stress-corrosion cracking in a marine atmosphere in the presence of notches, assuming the material is exposed to this type of environment.

(10) Proof of fabricability, including data verifying the repeatability of results.

(11) Nondestructive test requirements to be applied to the base material and joints as appropriate.

(12) Hazards involved in fabrication or use of material with respect to toxicity or flammability.

4. MATERIALS SPECIFICALLY NOT PERMITTED, The following materials are not permitted for pressure vessel piping system fabrication:

a. Any Class 2 or 3 material which cannot be shown to be justified under the restrictions imposed by the ASME Boiler and Pressure Vessel Code or other Navy requirements.

b. Magnesium and magnesium alloys.

c. Beryllium.

d. Steel: ASTM SA-36, SA-283, and SA-515 plate.

e. Any material which will enter into a rapid chemical reaction with seawater, gaseous oxygen, or any other media to be used inside the vessel.

f. Any material whose toughness at the minimum operational temperature is deemed insufficient.

5. MATERIAL COMPATIBILITY. When two or more materials are to be joined or are to be in close proximity, the designer must consider the effect of one material on the other particularly in terms of the environment to which they will be subjected.

a. Welded and Brazed Joints. The past few years have seen a pronounced tendency to join the components of critical piping systems with welded or brazed joints. Although such joints are usually more reliable than separable joints, the use of dissimilar materials can cause failures. The piping designer is responsible for insuring correct specification of approved joining materials and procedures. The ASME Code contains approved joining materials and procedures for the materials approved by the Code. For other materials, the piping designer must identify pertinent joining materials and procedures approved by industry or by a military specification.

b. Galvanic Corrosion. Care must be exercised when coupling dissimilar metals such as steel pipe to aluminum fittings to avoid galvanic action or galling. Coupling dissimilar metals subject to an electrolyte such as seawater requires careful consideration of the battery action created and the relative area affect of the materials. Good guidance is contained in The Corrosion Handbook by Herbert H. Uhlig (Reference 4), and MIL-STD-889 Dissimilar Metals (Reference 5).

Experience has revealed accelerated general corrosion in the vapor space and entrance igloo above wet pots due to poor material choices for hatch covers and piping.

The practice of building a shed over bottle fields and pipe runs accelerate corrosion in a marine atmosphere. The material under the shed is subject to salt buildup from seawater spray and salt laden fog. The roof prevents the rain from washing off the salt and drying from the sunshine. Most materials and specifically weathering steel are most corrosive resistant when boldly exposed to sun, rain, and wind. Alternate wetting and partial drying provides the most corrosive environment.

6. FLUID COMPATIBILITY. Two fluids found in hyperbaric chamber piping systems, oxygen and seawater, present particularly difficult compatibility

problems. Other fluids, such as helium, also have compatibility problems that must be considered.

a. Compatibility with Oxygen. Oxygen is the most dangerous fluid contained in hyperbaric chamber piping systems.

Brass or copper pipe has been appropriately used for 3,000 psig gaseous oxygen piping at LOX vaporizing and transfer facilities and hyperbaric chamber installations. However, with the relatively recent requirement for 5,000 psig gaseous nitrogen at these facilities, this piping material and pressure rating is inadequate for these higher pressure and gaseous piping systems. NAVFAC Instruction 11012.128 High Pressure Gaseous Oxygen and Nitrogen Piping at LOX/LN└2┘ Storage, Vaporizing, and Transfer/Generation Facilities (Reference 6) provides information for the design and fabrication and for the type of material, pressure rating and fittings required for high pressure gaseous oxygen and nitrogen piping systems at shore-based hyperbaric facilities. This instruction establishes the following requirements:

(1) 3,000-5,000 psig working pressure -- piping and tubing for the subject facilities shall be annealed austenitic stainless steel or nickel-copper (Monel) or copper-nickel.

(2) 0-3,000 psig working pressure -- copper and brass may be used in addition to the previously listed materials indicated for the higher pressures.

(3) To prevent accidental use of underrated tubing on new or rehabilitated projects, all tubing of the same nominal diameter should have the same pressure rating. This pressure rating shall be for the highest pressure which a given size tube will encounter on the project. The pressure rating of these systems shall be based on a safety factor of four.

(4) Connections for pipe or tubing to all fittings, valves, and other components of the subject plumbing systems for working pressures up to 5,000 psig must be in accordance with ANSI B 31.1, Power Piping, and must not be in conflict with the applicable requirements of the National Fire Protection Association Codes: NFPA 50, Bulk Oxygen Systems; NFPA 51, Oxygen-Fuel Gas Systems; NFPA 56D, Hyperbaric Facilities; and NFPA 56F, Nonflammable Medical Gas Systems (Reference 7).

For working pressures above 3,000 psig, all connections shall be made by welding, by flareless tube fittings equivalent to MIL-F-182.80C, or by flared tube fittings equivalent to MIL-F-5509C.

(5) All piping system components which come in contact with pressurized oxygen or with nitrogen, which is used for purging oxygen equipment, must be thoroughly cleaned to prevent explosions caused by the highly reactive nature of oxygen. Cleaning methods and cleanness testing techniques should be matched to the characteristics of the piping system. Specific information on cleaning procedures and testing criteria are provided in Chapter 12.

(6) All stainless steel fittings shall be austenitic stainless steel in accordance with either MIL-F-5509 for AN fittings or MIL-F-18866 for industrial fittings. These specifications shall be qualified so that the fittings shall have a minimum burst strength of 20,000 psig. To prevent interchanging these two types of fittings, all of the fittings for a single contract shall be of the same type as in the rest of the system.

Note: Although the instruction does not specifically refer to pump diaphragms, it can be inferred that since the instruction applies to all parts of a piping system in contact with high-pressure oxygen, it also applies to oxygen pump parts.

MIL-STD-777, Schedule of Piping, Valves, Fittings, and Associated Piping Components for Naval Surface Ships (Reference 8) contains guidance for the use of copper alloy materials with liquid and gaseous oxygen. The types of service are shown in Table 5-3.

TABLE 5-3
Oxygen Systems Contained in MIL-STD-777

Category and Group	Service	System Pressure, psig	Maximum Temperature, F
MIL-STD-777			
K-1	Gaseous oxygen outside hull	3000	150
K-2	Gaseous oxygen inside hull	3000	ambient
K-3	Gaseous oxygen	100	ambient
K-4	Liquid oxygen and nitrogen	6000	-
K-5	Liquid oxygen and nitrogen	250	-

b. Compatibility with Seawater. The compatibility of piping materials with seawater, when seawater is the contained fluid, will not normally represent a threat to personnel safety. A number of piping materials are compatible with seawater; however, seawater can cause corrosion and malfunctioning of moving parts, such as are contained in valves, and avoidance of this situation is a design problem. MIL-STD-777 (Reference 8) and MIL-STD-889 Dissimilar Metals (Reference 5) contain guidance for the use of materials in piping systems containing seawater.

c. Compatibility with Other Materials. Most of the fluids in hyperbaric chamber piping systems other than oxygen and seawater do not present significant compatibility problems. MIL-STD-777 (Reference 8) and MIL-STD-889 (Reference 5) contain guidance for the selection of materials for use with air, nitrogen, helium, and fresh water.

7. ENVIRONMENTAL COMPATIBILITY. Although minor corrosion problems can occur in an industrial environment, marine environments present the most serious source of environmental corrosion for hyperbaric chamber piping systems. Corrosion is usually caused by mist-laden sea air. The Corrosion Handbook by Herbert H. Uhlig (Reference 4) contains data on such corrosion. MIL-STD-777 also contains guidance. For specific problems, such as stress corrosion or crevice corrosion, it may be necessary to seek out references on the particular materials of interest. Marine research laboratories can often provide such data.

8. ENGINEERING PROPERTIES. The most important of the engineering properties which are considered during material selection are thermal conductivity, coefficient of thermal expansion, strength, and nil-ductility transition temperature.

a. Thermal Conductivity and Expansion. Differential expansion in a piping system can cause severe stress and distortion, resulting in component failure or malfunctioning. Calculations to determine the effects of temperature changes in a piping system require values for the thermal conductivity and coefficient of thermal expansion for the piping system materials. These values can be obtained from the ASME Code or from authoritative source data such as publications of the National Bureau of Standards.

b. Strength. Calculations to determine the structural adequacy of piping systems require values for the yield strength, ultimate strength, and fatigue strength of the piping system materials.

CAUTION: Values from materials handbooks cannot be used because there are many different approaches or formulas to calculating structural adequacy and each formula represents an attempt to estimate (1) calculation accuracy, (2) material strength, (3) fabrication variations, (4) material sensitivity to defects, and (5) loading variations. Each calculation approach is an attempt to provide an adequate, but not excessive, safety factor for the probable variations in manufacturing conditions and in service loading conditions. Extensive industrial experience has gone into the selection of calculation approaches and appropriate stress values for the ASME Code.

While materials handbook values may be used to compare materials roughly, the actual values used for calculations must either be taken from the tables in the ASME Code or they must be selected using the same philosophy that was used to select the ASME Code values.

c. Nil-Ductility Transition Temperature. When some carbon steels are reduced in temperature, their notch toughness is reduced to the point that they have nil-ductility. The temperature at which this occurs can be as high as 35 to 45 deg. F. Failures from this effect can be sudden and catastrophic, therefore the piping system designer must avoid such failures by selecting a material which has a nil-ductility temperature well below the minimum operating temperature. (A design approach to this problem is discussed in Chapter 2.)

9. ECONOMIC FACTORS. The designer of the piping system should obtain estimates of fabrication costs. Items made from less used materials are often not as available as is first indicated. A delivery quotation should be obtained with the cost quotation for every component that is not readily available.

Section 4. CONSTRUCTION CONSIDERATIONS

1. MECHANICAL STRENGTH. When necessary for mechanical strength to prevent damage, collapse, excessive sag or buckling of pipe due to superimposed loads from supports or other causes, the wall thickness of the pipe should be increased; or, if this is impractical or would cause excessive local stresses, the superimposed loads or other causes shall be reduced or eliminated by other design methods. It shall be the responsibility of the designer to determine if the completed piping system must be subjected to a detailed stress analysis. Should a stress analysis be required, it shall be performed in accordance with the requirements of the B 31.1 Code (Reference 2).

2. PIPE SUPPORTS. Careful consideration must be given to the mechanical support of all pipe, tubing, and system components. The strength of all mechanical supports must be adequate for all reasonably anticipated externally applied loads as well as the planned functional loads. This will include the applied force when valves are being operated or regulators are being adjusted as well as loading from actuating pressure relief devices and normal human operator abuse. If a section of pipe is located where it is likely to be used as a step, a handhold, or a ladder, it should be protected or braced accordingly.

The spacing of pipe supports is frequently left to the art and skill of the field installation crew; however, the system designer should provide some guidance for the support spacing. A good rule of thumb for this is, "supports should be located at each end of a pipe or tubing run with intermediate supports spaced at approximately 50 diameters of the supported pipe."

The supports must be arranged so that they do not impose excessive loads on the system when the pipe changes size in response to pressure or temperature changes.

3. BENDING. Detailed instructions and minimum radii for the hot or cold bending of pipe and tubing are given in MIL-STD-1627, Bending of Pipe or Tube for Ship Piping Systems (Reference 9).

General guidance for bending requires that the minimum wall thickness at any point in a completed bend shall not be less than the computed wall thickness for the design pressure and temperature.

A simplified table for the required minimum wall thickness before bending is presented below. It is based on the theoretical minimum calculated wall thickness for a straight pipe section, (t_m).

Table 5-4 is a guide to the designer who must specify wall thickness for ordering pipe or tube. In general, it has been the experience that when good shop practices are employed, the minimum thicknesses of straight pipe and tubing shown in Table 5-4, should be sufficient for bending, and still meet the minimum thickness requirements. The bend thinning allowance in table 5-4 may be provided in all parts of the cross section of the pipe or tube circumference without any detrimental effects being produced.

When fully annealed tubing is bent, the increase in tensile strength due to work hardening normally offsets the loss in wall thickness due to thinning. For fully annealed tubing only, the bending allowances in table 5-4 may be reduced or eliminated if the fabricator can demonstrate by actual test that the bending procedures used do not reduce the tubing burst pressure below a level 4.5 times the MAWP for the tubing. Tubing bent in this manner shall not be annealed following bending.

For ferrous pipe material, when the radius of a bend is 5 nominal pipe diameters or greater, and the nominal wall thickness of the pipe is schedule 40 or thicker the difference between maximum and minimum diameters shall not exceed 8% of average measured outside diameter of the pipe before bending. Greater flattening may be permitted or less flattening may be required by the design, depending upon the service, the material, and the stress level involved.

TABLE 5-4
Wall Thickness for Bending

Radius of Bends (Note 1)	Min. Thickness Recommended Prior to Bending (Note 2)
6 pipe diameters or greater	1.06 $t_{[m]}$
5 pipe diameters	1.08 $t_{[m]}$
4 pipe diameters	1.14 $t_{[m]}$
3 pipe diameters	1.25 $t_{[m]}$

Note 1: Interpolation is permissible for bending to intermediate radii.

2: $t_{[m]}$ is minimum wall thickness in inches (millimeters).

3: Pipe diameter is the nominal diameter as tabulated in ANSI Standards B36.10, Tables 2 and 4, and B36.19, Table 1. For pipe with a diameter not listed in these tables, and also for tubing, the nominal diameter corresponds with the outside diameter.

4. PIPE JOINTS.

a. Welded Joints. Welded joints in chamber systems shall be constructed in accordance with the requirements of Sections 127, 131, and 132 of the B 31.1 Code subject to the following additional restrictions:

Welded joints of 2-1/2" pipe size or smaller may be socket welded or butt welded. Welded joints over 2-1/2" pipe size shall be butt welded.

The finished interior surface of pipe joints shall be as smooth as practically possible to reduce the amount of noise generated. Backing rings when used in pressurization, depressurization or life support loop lines shall either be removed or be of a consumable type.

b. Brazed Pipe and Tube Joints.

(1) Brazed joints shall be made in accordance with the requirements of NAVSEA 0900-LP-001-7000 (including changes) Fabrication and Inspection of Brazed Piping Systems (Reference 12) or the AWS Brazing Manual (Reference 13).

(2) Filler Metal. The filler metal used in brazing shall be a nonferrous metal or alloy having a melting point above 800 deg. F (425 deg. C) and below that of the metal being joined. The filler metal shall melt and flow freely within the desired temperature range, and in conjunction with a suitable flux or controlled atmosphere, shall wet and adhere to the surfaces to be joined.

(3) Flux. Fluxes that are fluid and chemically active at the brazing temperature shall be used when necessary to prevent oxidation of the filler metal and the surfaces to be joined and to promote free flowing of the filler metal.

(4) Corrosion Resistance. All brazed materials, components, and fittings shall be of corrosion resistant metals (stainless steel, brass, bronze, etc.). Combinations from NAVSEA 0900-LP-001-7000 (Reference 12), Table 5-1, or from the AWS Brazing Manual (Reference 13) are recommended.

(5) Surface Preparation. The surface to be brazed shall be clean and free from grease, oxides, paint, scale, and dirt of any kind. A suitable chemical or mechanical cleaning method can be used to provide a clean wettable surface for brazing.

(6) Joint Clearance. The clearance between surfaces to be joined shall be no larger than is necessary to insure complete capillary distribution of the filler metal. (See NAVSEA 0900-LP-001-7000, Table 5-2, Reference 12.)

(7) Heating. The joint shall be brought to brazing temperature in as short a time as possible to minimize oxidation.

(8) Brazing Qualification. The qualification of the brazing procedure, and of the performance of brazers and brazing operators, shall be in accordance with the requirements of Part QN, Section IX, of the ASME Code

or the applicable parts of the NAVSEA 0900-LP-001-7000 (Reference 12) or ASW Brazing Manual (Reference 13).

c. Flanged Joints/Bolted Flanges.

(1) All bolted flanged joints shall be fitted up so that the gasket contact faces bear uniformly on the gasket, and then shall be made up with relatively uniform bolt stress.

(2) In bolting gasketed flanged joints, the gasket shall be properly compressed in accordance with the design principles applicable to the type of gasket used.

(3) All bolts shall be engaged so that there is visible evidence of complete threading through the nut or threaded attachment.

(4) Where bolted flange joints are used in breathing gas systems, the fabricator shall provide making and unmaking instructions with the system. The instructions shall include as a minimum: required bolt and nut materials, required gasket material, maximum and minimum allowable nut torques, and torquing sequence.

(5) The pressure design of bolted flanges and blanks shall be in accordance with para. 104.5 of the B 31.1 Code (Reference 2) with the following additional restrictions:

Flanges shall be joined to the pipe by butt welding, socket welding threading or other proved mechanical joining techniques. Slip-on flanges shall not be used.

(6) Flat face O-ring unions and other mechanical joint designs employing self-energizing seals where effective sealing is not dependent on bolt pre-loading are recommended over bolted flanges.

d. Threaded Joints.

(1) Threaded connections shall be made with fittings. Fittings shall have a working pressure rating equal to or greater than the maximum allowable working pressure (MAWP) of the system in which they are used.

(2) Straight thread O-ring sealed fittings may be used up to the manufacturer’s rated MAWP with no limitation on size. For helium service, it is recommended that pipe threads be avoided wherever possible, especially in the larger sizes, at higher pressures or where stainless on stainless joints are required. Straight thread O-ring sealed fittings are recommended over pipe thread fittings for helium service, However, for marine systems consideration must also be given to the availability of replacement fittings. Straight thread O-ring sealed fittings are not nearly as readily available as are pipe thread fittings.

(3) Any compound or lubricant used in threaded joints shall be suitable for the service conditions and shall not react unfavorably with either the service fluid or the piping materials. Chapter 12 contains a listing of thread compounds and lubricants that are known to be acceptable for oxygen and breathing gas service.

(4) Threaded joints which are to be seal welded shall be made up without any thread compound. The threads shall be entirely covered by the seal weld. Seal welding shall be done by qualified welders.

(5) Backing off to permit alignment of pipe threaded joints shall not be permitted.

(6) Where pipe threads are to be used between stainless steel components, there should be a hardness difference between the two components of at least 5 Rockwell C.

(7) When straight thread O-ring sealed fittings are used in locations that may subject the fitting to a torque that would tend to unscrew it, provision shall be made to prevent inadvertent loosening of the fitting.

(8) A suitable thread compound shall be used in making up threaded joints in aluminum pipe to prevent seizing which might cause leakage and perhaps prevent disassembly. Aluminum pipe in the annealed temper should not be threaded.

Section 5. DESIGN GUIDANCE

1. DESIGN GUIDANCE. This section contains design guidance on the following steps:

a. Preliminary flow analysis.

b. Design for pressure.

c. System detailing and final flow analysis.

d. Structural analysis.

e. Noise considerations.

2. PRELIMINARY FLUID-FLOW ANALYSIS. To conduct a preliminary fluid-flow analysis, the piping designer should consider two aspects of fluid flow in hyperbaric chamber piping systems: flow capacity and gas-flow-generated noise. Design guidance for estimating the flow capacity of piping systems can be relatively specific. Design guidance in regard to flow noise is less well defined.

a. Flow Capacity Estimates. The flow requirements for each fluid system are best specified before starting the piping design in order that complex calculations are not duplicated. The piping designer may be required to seek assistance beyond his own area of responsibility to accomplish this. The designer will need the following information to conduct a complete fluid flow capacity analysis: maximum required flow rate; fluid characteristics; approximate distance over which the fluid is to be transported; source pressure,

maximum and minimum; delivery pressure, maximum and minimum; system temperature, maximum and minimum; flow-control requirements. The preliminary fluid flow calculations are based on estimates of piping size and component location. The use of simplified fluid flow calculations is described in this section. (Detailed flow calculations, made after design information is more complete, are described in Section 5, Paragraph 4.)

NOTE: The designer should note that Section 5, Paragraph 4, provides a reference for making detailed flow calculations. The designer should review that reference so he will not be misled by the brevity of the section into thinking the procedure in itself is short or simple.

(1) Fluid Flow Approximations. The piping configuration must initially be approximated for each system to provide the required flow rate. This requires an estimate of the piping arrangements and of the locations and types of valves and fittings. The basic problem becomes one of selecting the smallest pipe size for each system that does not cause an excessive pressure drop. Excessive pressure drop in piping containing a liquid can result in cavitation as well as require excessive pumping pressure (requiring an expensive pump or high-strength pipe), while excessive pressure drop in piping containing a gas can result in excessive noise or insufficient capacity if sonic flow is encountered. (Thus, "excessive" will be defined by the designer within the context of the system.) Using a larger pipe size will reduce the noise of the fluid flow. The Piping Handbook by Crocker and King (Reference 14) and the Crane Company Technical Paper No. 410, Flow of Fluids Through Valves, Fittings, and Pipe (Reference 15), as well as other sources of the designer's choice, provide guidance for making fluid flow calculations. The initial sizing of a fluid system can be accomplished through the use of Darcy's formula (Reference 15) and the use of selected tables and simplified calculations.

(2) Darcy's Formula. Darcy's formula expresses the pressure drop resulting from fluid friction in a pipe. In use of this formula, pressure drop through valves and fittings is expressed in terms of pipe length. One form of this formula is the following equation:

$$[DELTA]P = \frac{fL}{D} \frac{[rho]V^2}{2g144} \qquad (1)$$

where: [DELTA]P = pressure drop, psi
f = Moody friction factor
L = length of pipe, feet
[rho] = fluid weight density, pounds/feet^3
V = mean flow velocity, feet/second
g = acceleration of gravity, 32.2 feet/second
D = pipe diameter inches.

(a) Friction factor. The friction factor, f, in Equation (1) is an experimentally determined value which varies in accordance with several fluid properties. For approximation purposes it is convenient and conservative to assume that complete turbulence exists in the fluid system. For this condition, f can be obtained from Figure 5-1 using only the appropriate inside pipe diameter. Values for f will normally range from

about 0.035 for small pipe to about 0.013 for large pipe.

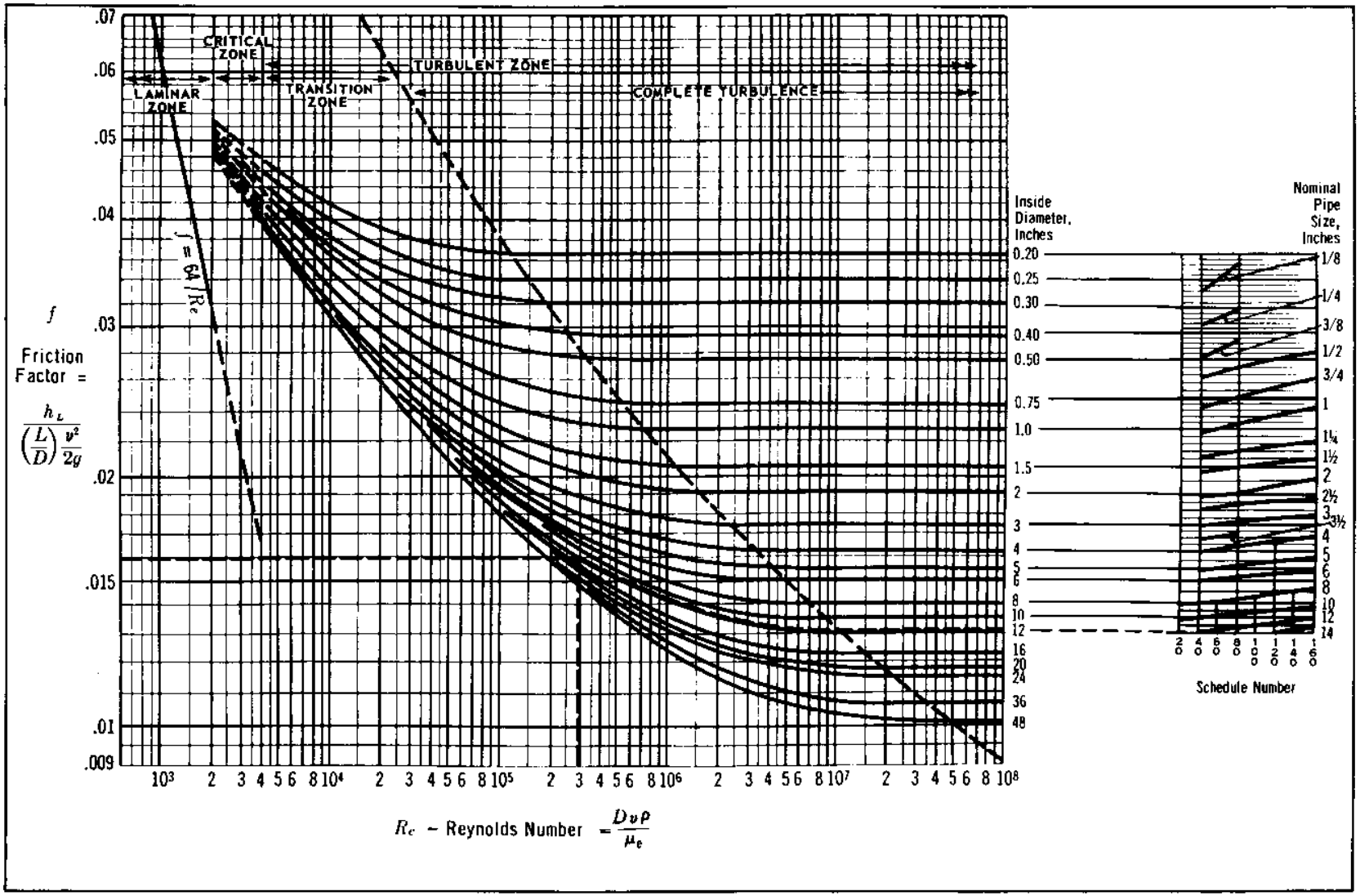

FIGURE 5-1

Friction Factors for Clean Commercial Steel and Wrought Iron Pipe

(Reproduced with permission from "Transactions of the American Society of Mechanical Engineers", L.F. Moody, Vol. 66, November, 1946)

(b) Equivalent pipe length. The parts causing pressure drop in a fluid system include not only the pipe, but also such components as fittings and valves. Because the pressure drop across a valve or fitting can be considered as being equal to the pressure drop through a length of pipe, the L in Equation (1) can be considered as being made up of the length of the actual pipe and an equivalent length of pipe representing the fittings and valves. Figure 5-2 is a nomograph that can be used to approximate the equivalent length of pipe in feed for common types and sizes of fittings and valves.

(c) Weight density. Weight densities for liquids will have values close to the weight density of water (62.2 pounds/feet^3 at 80 deg. F). Weight densities for gasses will vary significantly because pressures can range from atmospheric to as high as 5000 psi. When approximating pipe sizes for gasses, a calculation must be made to estimate the weight density of the individual gas at an estimated effective pressure. (The U.S. Navy Diving-Gas Manual, (Reference 16) contains extensively tabulated values of the densities of breathing gas for typical hyperbaric chamber conditions.) The weight density for gasses at any pressure is approximately equal to:

$$[rho] = \frac{144\ P}{RT}$$

where: P = absolute pressure, psia (gage pressure + 14.7)
R = individual gas constant
T = absolute temperature in degrees Rankine (460 + F).

The weight densities for typical gasses at atmospheric pressure and 68 deg. F are shown in Table 5-5. From Equation (2) and Table 5-5 it is apparent that the weight density of breathing gasses at 68 deg. F can vary from about 0.01 per cubic foot for helium at atmospheric pressure to about 3.5 pounds per cubic foot for oxygen at 5000 psi.

(d) Mean flow velocity. The fluid pressure drop varies as the square of the mean fluid velocity. Velocity ranges for water and steam are given in Tables 5-6 and 5-7. Use of these values will normally avoid "excessive" pressure drop. Values considerably higher than those tabulated have been used satisfactorily, however. Because an increase in pressure drop may require an increase in source pressure, the effect of pressure on fittings, valves, and pipe wall thickness must be considered. Table 5-8 identifies various pressure classes of fittings and valves with pipe schedule numbers.

(3) Approach to Flow Approximation. The approximation approach described in this manual is based on selective use of the above background information and Tables 5-9, 5-10, and 5-11. For a required flow of liquids, these tables can be used directly to find the liquid velocities and pressure drops per 100 feet of pipe for common sizes of Schedule 40 pipe.

When a tentative pipe size has been selected, the equivalent pipe lengths for the estimated valves and fittings can be estimated by using Figure 5-2. These equivalent lengths are then added to the actual pipe length and the total pressure drop is calculated using the psi drop per 100 feet given in Table 5-9.

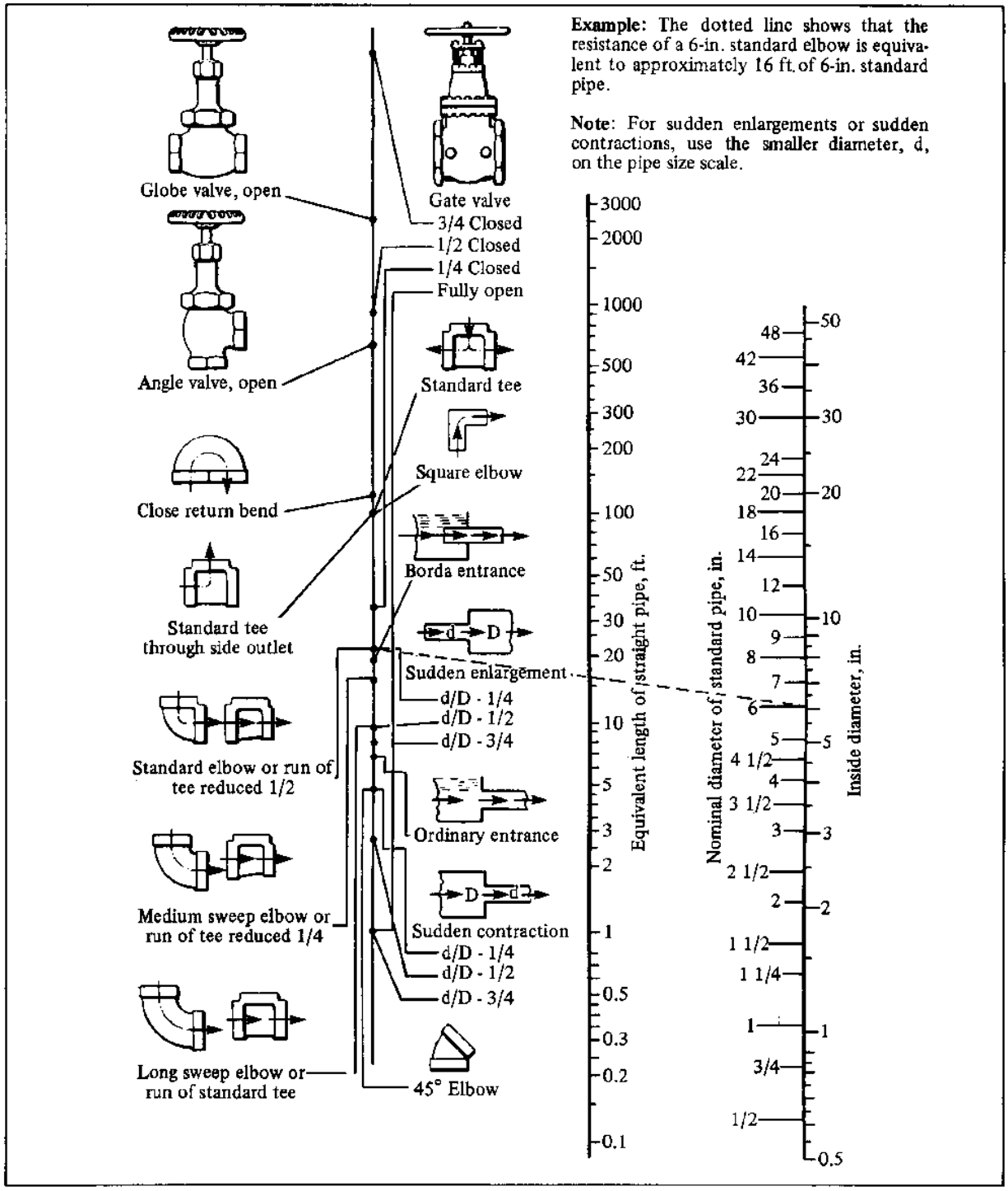

FIGURE 5-2

Resistance of Valves and Fittings

(Reproduced by permission from The Crane Company)

TABLE 5-5

Physical Properties of Gases

(Reproduced with permission from "Mechanical Engineers Handbook" by L.S. Marks, Copyright May, 1955, McGraw-Hill, Inc.)

c_p = specific heat at constant pressure
c_v = specific heat at constant volume

Name of Gas	Chemical Formula or Symbol	Approx. Molecular Weight M	Weight Density, Pounds per Cubic Foot* ρ	Specific Gravity Relative To Air S_g	Individual Gas Constant R	Specific Heat Per Pound at Room Temperature c_p	Specific Heat Per Pound at Room Temperature c_v	Heat Capacity Per Cubic Foot at Atmospheric Pressure and 68 F c_p	Heat Capacity Per Cubic Foot at Atmospheric Pressure and 68 F c_v	k equal to c_p/c_v
Acetylene	C_2H_2	26.0	.06754	.897	59.4	.350	.2737	.0236	.0185	1.28
Air	—	29.0	.07528	1.000	53.3	.241	.1725	.0181	.0130	1.40
Ammonia	NH_3	17.0	.04420	.587	90.8	.523	.4064	.0231	.0179	1.29
Argon	A	40.0	.1037	1.377	38.7	.124	.0743	.0129	.0077	1.67
Carbon Dioxide	CO_2	44.0	.1142	1.516	35.1	.205	.1599	.0234	.0183	1.28
Carbon Monoxide	CO	28.0	.07269	.965	55.2	.243	.1721	.0177	.0125	1.41
Ethylene	C_2H_4	28.0	.0728	.967	55.1	.40	.3292	.0291	.0240	1.22
Helium	He	4.0	.01039	.138	386.	1.25	.754	.0130	.0078	1.66
Hydrochloric Acid	HCl	36.5	.09460	1.256	42.4	.191	.1365	.0181	.0129	1.40
Hydrogen	H_2	2.0	.005234	.0695	767.	3.42	2.435	.0179	.0127	1.40
Methane	CH_4	16.0	.04163	.553	96.4	.593	.4692	.0247	.0195	1.26
Methyl Chloride	CH_3Cl	50.5	.1309	1.738	30.6	.24	.2006	.0314	.0263	1.20
Nitrogen	N_2	28.0	.07274	.966	55.2	.247	.1761	.0179	.0128	1.40
Nitric Oxide	NO	30.0	.07788	1.034	51.5	.231	.1648	.0180	.0128	1.40
Nitrous Oxide	N_2O	44.0	.1143	1.518	35.1	.221	.1759	.0253	.0201	1.26
Oxygen	O_2	32.0	.08305	1.103	48.3	.217	.1549	.0180	.0129	1.40
Sulphur Dioxide	SO_2	64.0	.1663	2.208	24.1	.154	.1230	.0256	.0204	1.25

*Weight density values are at atmospheric pressure and 68 F.
For values at 60 F, multiply by 1.0154.

TABLE 5-6
Reasonable Velocities for the Flow of Water Through Pipe
(Reproduced with permission from "Flow of Fluids Through Valves, Fittings, and Pipe", Technical Paper No. 410, Copyright 1965, Crane Company)

Service Condition	Reasonable Velocity
Boiler Feed	8 to 15 feet per second
Pump Suction and Drain Lines. . . .	4 to 7 feet per second
General Service	4 to 10 feet per second
City	to 7 feet per second

TABLE 5-7
Reasonable Velocities for the Flow of Steam Through Pipe
(Reproduced with permission from "Flow of Fluids Through Valves, Fittings, and Pipe", Technical Paper No. 410, Copyright 1965, Crane Company)

Condition of Steam	Pressure (P) Psig	Service	Reasonable Velocity (V) Feet per Second
Saturated	0 to 25	Heating (short lines)	66 - 100
	25 and up	Power house equipment, process piping etc.	100 - 166
Superheated	200 and up	Boiler and turbine leads, etc.	116 - 333

TABLE 5-8
Schedule (Thickness of Steel Pipe Used in Obtaining Resistance of Valves and Fittings of Various Pressure Classes by Test)
(Reproduced with permission from "Flow of Fluids Through Valves, Fittings, and Pipe", Technical Paper No. 410, Copyright 1965, Crane Company)

Valve or Fitting ASA Pressure Classification (Steam Rating)		Schedule No. of Pipe (Thickness)	*These schedule numbers have been arbitrarily selected only for the purpose of identifying the various pressure classes of valves of valves and fittings with specific pipe dimensions for the interpretation of flow test data; they should not be construed as a recommen dation for installation purposes.
250-Pound and Lower		Schedule 40	
300-Pound to 600-Pound		Schedule 80	
900-Pound		Schedule 120	
1500-Pound		Schedule 160	
2500-Pound	Sizes 1/2 to 6-inch	xx (Double Extra Strong)	
	Sizes 8-inch and larger	Schedule 160	

TABLE 5-9

Flow of Water Through Schedule 40 Steel Pipe

(Reproduced with permission from the Crane Company)

Discharge		Pressure Drop per 100 feet and Velocity in Schedule 40 Pipe for Water at 60 F.															
		Velocity	Press. Drop	Velocity	Press. Drop	Velocity	Press. Drop	Velocity	Press. Drop	Velocity	Press. Drop	Velocity	Press. Drop	Velocity	Press. Drop	Velocity	Press. Drop
Gallons per Minute	Cubic Ft. per Second	Feet per Second	Lbs. per Sq. In.	Feet per Second	Lbs. per Sq. In.	Feet per Second	Lbs. per Sq. In.	Feet per Second	Lbs. per Sq. In.	Feet per Second	Lbs. per Sq. In.	Feet per Second	Lbs. per Sq. In.	Feet per Second	Lbs. per Sq. In.	Feet per Second	Lbs. per Sq. In.
		1/8"		1/4"		3/8"		1/2"									
.2	0.000446	1.13	1.86	0.616	0.359												
.3	0.000668	1.69	4.22	0.924	0.903	0.504	0.159	0.317	0.061	3/4"							
.4	0.000891	2.26	6.98	1.23	1.61	0.672	0.345	0.422	0.086								
.5	0.00111	2.82	10.5	1.54	2.39	0.840	0.539	0.528	0.167	0.301	0.033						
.6	0.00134	3.39	14.7	1.85	3.29	1.01	0.751	0.633	0.240	0.361	0.041						
.8	0.00178	4.52	25.0	2.46	5.44	1.34	1.28	0.844	0.408	0.481	0.102	1"		1 1/4"			
1	0.00223	5.65	37.2	3.08	8.28	1.68	1.85	1.06	0.600	0.602	0.155	0.371	0.048			1 1/2"	
2	0.00446	11.29	134.4	6.16	30.1	3.36	6.58	2.11	2.10	1.20	0.526	0.743	0.164	0.429	0.044		
3	0.00668			9.25	64.1	5.04	13.9	3.17	4.33	1.81	1.09	1.114	0.336	0.644	0.090	0.473	0.043
4	0.00891			12.33	111.2	6.72	23.9	4.22	7.42	2.41	1.83	1.49	0.565	0.858	0.150	0.630	0.071
5	0.01114	2"				8.40	36.7	5.28	11.2	3.01	2.75	1.86	0.835	1.073	0.223	0.788	0.104
6	0.01337	0.574	0.044	2 1/2"		10.08	51.9	6.33	15.8	3.61	3.84	2.23	1.17	1.29	0.309	0.946	0.145
8	0.01782	0.765	0.073			13.44	91.1	8.45	27.7	4.81	6.60	2.97	1.99	1.72	0.518	1.26	0.241
10	0.02228	0.956	0.108	0.670	0.046			10.56	42.4	6.02	9.99	3.71	2.99	2.15	0.774	1.58	0.361
15	0.03342	1.43	0.224	1.01	0.094	3"				9.03	21.6	5.57	6.36	3.22	1.63	2.37	0.755
20	0.04456	1.91	0.375	1.34	0.158	0.868	0.056	3 1/2"		12.03	37.8	7.43	10.9	4.29	2.78	3.16	1.28
25	0.05570	2.39	0.561	1.68	0.234	1.09	0.083	0.812	0.041	4"		9.28	16.7	5.37	4.22	3.94	1.93
30	0.06684	2.87	0.786	2.01	0.327	1.30	0.114	0.974	0.056			11.14	23.8	6.44	5.92	4.73	2.72
35	0.07798	3.35	1.05	2.35	0.436	1.52	0.151	1.14	0.704	0.882	0.041	12.99	32.2	7.51	7.90	5.52	3.64
40	0.08912	3.83	1.35	2.68	0.556	1.74	0.192	1.30	0.095	1.01	0.052	14.85	41.5	8.59	10.24	6.30	4.65
45	0.1003	4.30	1.67	3.02	0.668	1.95	0.239	1.46	0.117	1.13	0.064			9.67	12.80	7.09	5.85
50	0.1114	4.78	2.03	3.35	0.839	2.17	0.288	1.62	0.142	1.26	0.076	5"		10.74	15.66	7.88	7.15
60	0.1337	5.74	2.87	4.02	1.18	2.60	0.406	1.95	0.204	1.51	0.107			12.89	22.2	9.47	10.21
70	0.1560	6.70	3.84	4.69	1.59	3.04	0.540	2.27	0.261	1.76	0.143	1.12	0.047			11.05	13.71
80	0.1782	7.65	4.97	5.36	2.03	3.47	0.687	2.60	0.334	2.02	0.180	1.28	0.060			12.62	17.59
90	0.2005	8.60	6.20	6.03	2.53	3.91	0.861	2.92	0.416	2.27	0.224	1.44	0.074	6"		14.20	22.0
100	0.2228	9.56	7.59	6.70	3.09	4.34	1.05	3.25	0.509	2.52	0.272	1.60	0.090	1.11	0.036	15.78	26.9
125	0.2785	11.97	11.76	8.38	4.71	5.43	1.61	4.06	0.769	3.15	0.415	2.01	0.135	1.39	0.055	19.72	41.4
150	0.3342	14.36	16.70	10.05	6.69	6.51	2.24	4.87	1.08	3.78	0.580	2.41	0.190	1.67	0.077		
175	0.3899	16.75	22.3	11.73	8.97	7.60	3.00	5.68	1.44	4.41	0.774	2.81	0.253	1.94	0.102		
200	0.4456	19.14	28.8	13.42	11.68	8.68	3.87	6.49	1.85	5.04	0.985	3.21	0.323	2.22	0.130	8"	
225	0.5013	...	...	15.09	14.63	9.77	4.83	7.30	2.32	5.67	1.23	3.61	0.401	2.50	0.162	1.44	0.043
250	0.557	...	...	...	...	10.85	6.93	8.12	2.84	6.30	1.46	4.01	0.496	2.78	0.196	1.60	0.051
275	0.6127	...	...	...	...	11.94	7.14	8.93	3.40	6.93	1.79	4.41	0.583	3.05	0.234	1.76	0.061
300	0.6684	...	...	...	...	13.00	8.36	9.74	4.02	7.56	2.11	4.81	0.683	3.33	0.275	1.92	0.072
325	0.7241	...	...	...	...	14.12	9.89	10.53	4.09	8.19	2.47	5.21	0.797	3.61	0.320	2.08	0.083
350	0.7798			...	...	...	...	11.36	5.41	8.82	2.84	5.62	0.919	3.89	0.367	2.24	0.095
375	0.8355			...	...	...	...	12.17	6.18	9.45	3.25	6.02	1.05	4.16	0.416	2.40	0.108
400	0.8912			...	...			12.98	7.03	10.08	3.68	6.42	1.19	4.44	0.471	2.56	0.121
425	0.9469			...	...	...	...	13.80	7.89	10.71	4.12	6.82	1.33	4.72	0.529	2.73	0.136
450	1.003	10"		...	...	...	...	14.61	8.80	11.34	4.60	7.22	1.48	5.00	0.590	2.89	0.151
475	1.059	1.93	0.054			...	...	...	...	11.97	5.12	7.62	1.64	5.27	0.653	3.04	0.166
500	1.114	2.03	0.059			...	...	...	...	12.60	5.65	8.02	1.81	5.55	0.720	3.21	0.182
550	1.225	2.24	0.071			...	...	...	...	13.85	6.79	8.82	2.17	6.11	0.861	3.53	0.219
600	1.337	2.44	0.083			...	...	...	...	15.12	8.04	9.63	2.55	6.66	1.02	3.85	0.258
650	1.448	2.64	0.097	12"		...	...	...	...	...	...	10.43	2.98	7.22	1.18	4.17	0.301
700	1.560	2.85	0.112	2.01	0.047			...	...	...	...	11.23	3.43	7.78	1.35	4.49	0.343
750	1.671	3.05	0.127	2.15	0.054	14"		...	...	...	...	12.03	3.92	8.33	1.55	4.81	0.392
800	1.782	3.25	0.143	2.29	0.061			...	...	...	...	12.83	4.43	8.88	1.75	5.13	0.443
850	1.894	3.46	0.160	2.44	0.068	2.02	0.042	...	...	...	...	13.64	5.00	9.44	1.96	5.45	0.497
900	2.005	3.66	0.179	2.58	0.075	2.13	0.047	...	...	...	...	14.44	5.58	9.99	2.18	5.77	0.554
950	2.117	3.86	0.198	2.72	0.083	2.25	0.052	16"		...	...	15.24	6.21	10.55	2.42	6.09	0.613
1 000	2.228	4.07	0.218	2.87	0.091	2.37	0.057			...	...	16.04	6.84	11.10	2.68	6.41	0.675
1 100	2.451	4.48	0.260	3.15	0.110	2.61	0.068			...	...	17.65	8.23	12.22	3.22	7.05	0.807
1 200	2.674	4.88	0.306	3.44	0.128	2.85	0.080	2.18	0.042	...	...	...	...	13.33	3.81	7.70	0.948
1 300	2.896	5.29	0.355	3.73	0.150	3.08	0.093	2.36	0.048	...	...	...	...	14.43	4.45	8.33	1.11
1 400	3.119	5.70	0.409	4.01	0.171	3.32	0.107	2.54	0.055					15.55	5.13	8.98	1.28
1 500	3.342	6.10	0.466	4.30	0.195	3.56	0.122	2.72	0.063	18"				16.66	5.85	9.62	1.46
1 600	3.565	6.51	0.527	4.59	0.219	3.79	0.138	2.90	0.071					17.77	6.61	10.26	1.65
1 800	4.010	7.32	0.663	5.16	0.276	4.27	0.172	3.27	0.088	2.58	0.060			19.99	8.37	11.54	2.08
2 000	4.456	8.14	0.808	5.73	0.339	4.74	0.209	3.63	0.107	2.87	0.060			22.21	10.3	12.82	2.55
2 500	5.570	10.17	1.24	7.17	0.515	5.93	0.321	4.54	0.163	3.59	0.091	20"				16.03	3.94
3 000	6.684	12.20	1.76	8.60	0.731	7.11	0.451	5.45	0.232	4.30	0.129	3.46	0.075	24"		19.24	5.59
3 500	7.798	14.24	2.38	10.03	0.982	8.30	0.607	6.35	0.312	5.02	0.173	4.04	0.101			22.44	7.56
4 000	8.912	16.27	3.08	11.47	1.27	9.48	0.787	7.26	0.401	5.74	0.222	4.62	0.129	3.19	0.061	25.65	9.80
4 500	10.03	18.31	3.87	12.90	1.60	10.67	0.990	8.17	0.503	6.46	0.280	5.20	0.162	3.59	0.068	28.87	12.2
5 000	11.14	20.35	4.71	14.33	1.95	11.85	1.21	9.08	0.617	7.17	0.340	5.77	0.199	3.99	0.079	...	...
6 000	13.37	24.41	6.74	17.20	2.77	14.23	1.71	10.89	0.877	8.61	0.483	6.93	0.280	4.79	0.111	...	...
7 000	15.60	28.49	9.11	20.07	3.74	16.60	2.31	12.71	1.18	10.04	0.652	8.08	0.376	5.59	0.150	...	...
8 000	17.82	...	...	22.93	4.84	18.96	2.99	14.52	1.51	11.47	0.839	9.23	0.488	6.38	0.192	...	...
9 000	20.05	...	...	25.79	6.09	21.34	3.76	16.34	1.90	12.91	1.05	10.39	0.608	7.18	0.242	...	...
10 000	22.28	...	...	28.66	7.46	23.71	4.61	18.15	2.34	14.34	1.28	11.54	0.739	7.98	0.294	...	...
12 000	26.74	...	...	34.40	10.7	28.45	6.59	21.79	3.33	17.21	1.83	13.85	1.06	9.58	0.416	...	...
14 000	31.19	...	...	...	...	33.19	8.89	25.42	4.49	20.08	2.45	16.16	1.43	11.17	0.562	...	...
16 000	35.65	...	...	...	...	...	...	29.05	5.83	22.95	3.18	18.47	1.85	12.77	0.723	...	...
18 000	40.10	...	...	...	...	...	...	32.68	7.31	25.82	4.03	20.77	2.32	14.36	0.907	...	...
20 000	44.56	...	...	...	...	...	...	36.31	9.03	28.69	4.93	23.08	2.86	15.96	1.12	...	...

For pipe lengths other than 100 feet, the pressure drop is proportional to the length. Thus, for 50 feet of pipe, the pressure drop is approximately one-half the value given in the table . . . for 300 feet, three times the given value, etc.

Velocity is a function of the cross sectional flow area; thus, it is constant for a given flow rate and is independent of pipe length.

TABLE 5-10

Flow of Air Through Schedule 40 Steel Pipe

(Reproduced with permission from the Crane Company)

For lengths of pipe other than 100 feet, the pressure drop is proportional to the length. Thus, for 50 feet of pipe, the pressure drop is approximately one-half the value given in the table . . . for 300 feet, three times the given value, etc.

The pressure drop is also inversely proportional to the absolute pressure and directly proportional to the absolute temperature.

Therefore, to determine the pressure drop for inlet or average pressures other than 100 psi and at temperatures other than 60 F, multiply the values given in the table by the ratio:

$$\left(\frac{100 + 14.7}{P + 14.7}\right)\left(\frac{460 + t}{520}\right)$$

where:

"P" is the inlet or average gauge pressure in pounds per square inch, and,

"t" is the temperature in degrees Fahrenheit under consideration.

The cubic feet per minute of compressed air at any pressure is inversely proportional to the absolute pressure and directly proportional to the absolute temperature.

To determine the cubic feet per minute of compressed air at any temperature and pressure other than standard conditions, multiply the value of cubic feet per minute of free air by the ratio:

$$\left(\frac{14.7}{14.7 + P}\right)\left(\frac{460 + t}{520}\right)$$

Calculations for Pipe Other than Schedule 40

To determine the velocity of water, or the pressure drop of water or air, through pipe other than Schedule 40, use the following formulas:

$$v_a = v_{40}\left(\frac{d_{40}}{d_a}\right)^2$$

$$\Delta P_a = \Delta P_{40}\left(\frac{d_{40}}{d_a}\right)^5$$

Subscript "a" refers to the Schedule of pipe through which velocity or pressure drop is desired.

Subscript "40" refers to the velocity or pressure drop through Schedule 40 pipe, as given in the tables on these facing pages.

Free Air q'_m Cubic Feet Per Minute at 60 F and 14.7 psia	Compressed Air Cubic Feet Per Minute at 60 F and 100 psig	Pressure Drop of Air In Pounds per Square Inch Per 100 Feet of Schedule 40 Pipe For Air at 100 Pounds per Square Inch Gauge Pressure and 60 F Temperature								
		⅛"	¼"	⅜"	½"					
1	0.128	0.361	0.083	0.018						
2	0.256	1.31	0.285	0.064	0.020					
3	0.384	3.06	0.605	0.133	0.043	¾"				
4	0.513	4.83	1.04	0.226	0.071					
5	0.641	7.45	1.58	0.343	0.106	0.027				
							1"			
6	0.769	10.6	2.23	0.408	0.148	0.037				
8	1.025	18.6	3.89	0.848	0.255	0.062	0.019			
10	1.282	28.7	5.96	1.26	0.356	0.094	0.029	1¼"	1½"	
15	1.922	...	13.0	2.73	0.834	0.201	0.062			
20	2.563	...	22.8	4.76	1.43	0.345	0.102	0.026		
25	3.204	...	35.6	7.34	2.21	0.526	0.156	0.039	0.019	
30	3.845	...	...	10.5	3.15	0.748	0.219	0.055	0.026	
35	4.486	...	...	14.2	4.24	1.00	0.293	0.073	0.035	
40	5.126	...	...	18.4	5.49	1.30	0.379	0.095	0.044	
45	5.767	...	...	23.1	6.90	1.62	0.474	0.116	0.055	2"
50	6.408			28.5	8.49	1.99	0.578	0.149	0.067	0.019
60	7.690	2½"		40.7	12.2	2.85	0.819	0.200	0.094	0.027
70	8.971			...	16.5	3.83	1.10	0.270	0.126	0.036
80	10.25	0.019		...	21.4	4.96	1.43	0.350	0.162	0.046
90	11.53	0.023		...	27.0	6.25	1.80	0.437	0.203	0.058
100	12.82	0.029	3"		33.2	7.69	2.21	0.534	0.247	0.070
125	16.02	0.044			..	11.9	3.39	0.825	0.380	0.107
150	19.22	0.062	0.021		..	17.0	4.87	1.17	0.537	0.151
175	22.43	0.083	0.028		...	23.1	6.60	1.58	0.727	0.205
200	25.63	0.107	0.036	3½"	...	30.0	8.54	2.05	0.937	0.264
225	28.84	0.134	0.045	0.022		37.9	10.8	2.59	1.19	0.331
250	32.04	0.164	0.055	0.027		...	13.3	3.18	1.45	0.404
275	35.24	0.191	0.066	0.032		...	16.0	3.83	1.75	0.484
300	38.45	0.232	0.078	0.037		...	19.0	4.56	2.07	0.573
325	41.65	0.270	0.090	0.043	4"	...	22.3	5.32	2.42	0.673
350	44.87	0.313	0.104	0.050		...	25.8	6.17	2.80	0.776
375	48.06	0.356	0.119	0.057	0.030	...	29.6	7.06	3.20	0.887
400	51.26	0.402	0.134	0.064	0.034	...	33.6	8.02	3.64	1.00
425	54.47	0.452	0.151	0.072	0.038	...	37.9	9.01	4.09	1.13
450	57.67	0.507	0.168	0.081	0.042	...	...	10.2	4.59	1.26
475	60.88	0.562	0.187	0.089	0.047		...	11.3	5.09	1.40
500	64.08	0.623	0.206	0.099	0.052		...	12.5	5.61	1.55
550	70.49	0.749	0.248	0.118	0.062		...	15.1	6.79	1.87
600	76.90	0.887	0.293	0.139	0.073		...	18.0	8.04	2.21
650	83.30	1.04	0.342	0.163	0.086	5"	...	21.1	9.43	2.60
700	89.71	1.19	0.395	0.188	0.099	0.032		24.3	10.9	3.00
750	96.12	1.36	0.451	0.214	0.113	0.036		27.9	12.6	3.44
800	102.5	1.55	0.513	0.244	0.127	0.041		31.8	14.2	3.90
850	108.9	1.74	0.576	0.274	0.144	0.046		35.9	16.0	4.40
900	115.3	1.95	0.642	0.305	0.160	0.051	6"	40.2	18.0	4.91
950	121.5	2.18	0.715	0.340	0.178	0.057	0.023	...	20.0	5.47
1 000	128.1	2.40	0.788	0.375	0.197	0.063	0.025	...	22.1	6.06
1 100	141.0	2.89	0.948	0.451	0.236	0.075	0.030	...	26.7	7.29
1 200	153.8	3.44	1.13	0.533	0.279	0.089	0.036	...	31.8	8.63
1 300	166.6	4.01	1.32	0.626	0.327	0.103	0.041	...	37.3	10.1
1 400	179.4	4.65	1.51	0.718	0.377	0.119	0.047			11.8
1 500	192.1	5.31	1.74	0.824	0.431	0.136	0.054			13.5
1 600	205.1	6.04	1.97	0.932	0.490	0.154	0.061	8"		15.3
1 800	230.7	7.65	2.50	1.18	0.616	0.193	0.075			19.3
2 000	256.3	9.44	3.06	1.45	0.757	0.237	0.094	0.023		23.9
									10"	
2 500	320.4	14.7	4.76	2.25	1.17	0.366	0.143	0.035		37.3
3 000	384.5	21.1	6.82	3.20	1.67	0.524	0.204	0.051	0.016	
3 500	448.6	28.8	9.23	4.33	2.26	0.709	0.276	0.068	0.021	
4 000	512.6	37.6	12.1	5.66	2.94	0.919	0.358	0.088	0.028	
4 500	576.7	47.6	15.3	7.16	3.69	1.16	0.450	0.111	0.035	12"
5 000	640.8	...	18.8	8.85	4.56	1.42	0.552	0.136	0.043	0.018
6 000	769.0	...	27.1	12.7	6.57	2.03	0.794	0.195	0.061	0.025
7 000	897.1	...	36.9	17.3	8.94	2.76	1.07	0.262	0.082	0.034
8 000	1025	...	...	22.5	11.7	3.60	1.39	0.339	0.107	0.044
9 000	1153	...	...	28.5	14.9	4.54	1.76	0.427	0.134	0.065
10 000	1282	...	...	35.2	18.4	5.60	2.16	0.526	0.164	0.067
11 000	1410	...	...	...	22.2	6.78	2.62	0.633	0.197	0.081
12 000	1538	...	...	...	26.4	8.07	3.09	0.753	0.234	0.096
13 000	1666	...	...	...	31.0	9.47	3.63	0.884	0.273	0.112
14 000	1794	...	...	...	36.0	11.0	4.21	1.02	0.316	0.129
15 000	1922	...	...	...	...	12.6	4.84	1.17	0.364	0.148
16 000	2051	...	...	...	...	14.3	5.50	1.33	0.411	0.167
18 000	2307	...	...	...	...	18.2	6.96	1.68	0.520	0.213
20 000	2563	...	...	...	...	22.4	8.60	2.01	0.642	0.260
22 000	2820	...	...	...	...	27.1	10.4	2.50	0.771	0.314
24 000	3076	...	...	...	...	32.3	12.4	2.97	0.918	0.371
26 000	3332	...	...	...	...	37.9	14.5	3.49	1.12	0.436
28 000	3588	...	...	...	...	...	16.9	4.04	1.25	0.505
30 000	3845	...	...	...	...	...	19.3	4.64	1.42	0.520

TABLE 5-11

Commercial Wrought Steel Pipe Data (15)

(Reproduced with permission from the Crane Company)

Schedule Wall Thickness — Per ANSI B36.10

	Nominal Pipe Size	Outside Diameter	Thickness	Inside Diameter		Inside Diameter Functions (In Inches)				Transverse Internal Area	
				d	D	d^2	d^3	d^4	d^5	a	A
	Inches	Inches	Inches	Inches	Feet					Sq. In.	Sq. Ft.
Schedule 10	14	14	0.250	13.5	1.125	182.25	2460.4	33215.	448400.	143.14	0.994
	16	16	0.250	15.5	1.291	240.25	3723.9	57720.	894660.	188.69	1.310
	18	18	0.250	17.5	1.4583	306.25	5359.4	93789.	1641309.	240.53	1.670
	20	20	0.250	19.5	1.625	380.25	7414.9	144590.	2819500.	298.65	2.074
	24	24	0.250	23.5	1.958	552.25	12977.	304980.	7167030.	433.74	3.012
	30	30	0.312	29.376	2.448	862.95	25350.	744288.	21864218.	677.76	4.707
Schedule 20	8	8.625	0.250	8.125	0.6771	66.02	536.38	4359.3	35409.	51.85	0.3601
	10	10.75	0.250	10.25	0.8542	105.06	1076.9	11038.	113141.	82.52	0.5731
	12	12.75	0.250	12.25	1.021	150.06	1838.3	22518.	275855.	117.86	0.8185
	14	14	0.312	13.376	1.111	178.92	2393.2	32012.	428185.	140.52	0.9758
	16	16	0.312	15.376	1.281	236.42	3635.2	55894.	859442.	185.69	1.290
	18	18	0.312	17.376	1.448	301.92	5246.3	91156.	1583978.	237.13	1.647
	20	20	0.375	19.250	1.604	370.56	7133.3	137317.	2643352.	291.04	2.021
	24	24	0.375	23.25	1.937	540.56	12568.	292205.	6793832.	424.56	2.948
	30	30	0.500	29.00	2.417	841.0	24389.	707281.	20511149.	660.52	4.587
Schedule 30	8	8.625	0.277	8.071	0.6726	65.14	525.75	4243.2	34248.	51.16	0.3553
	10	10.75	0.307	10.136	0.8447	102.74	1041.4	10555.	106987.	80.69	0.5603
	12	12.75	0.330	12.09	1.0075	146.17	1767.2	21366.	258304.	114.80	0.7972
	14	14	0.375	13.25	1.1042	175.56	2326.2	30821.	408394.	137.88	0.9575
	16	16	0.375	15.25	1.2708	232.56	3546.6	54084.	824801.	182.65	1.268
	18	18	0.438	17.124	1.4270	293.23	5021.3	85984.	1472397.	230.30	1.599
	20	20	0.500	19.00	1.5833	361.00	6859.0	130321.	2476099.	283.53	1.969
	24	24	0.562	22.876	1.9063	523.31	11971.	273853.	6264703.	411.00	2.854
	30	30	0.625	28.75	2.3958	826.56	23764.	683201.	19642160.	649.18	4.508
Schedule 40	⅛	0.405	0.068	0.269	0.0224	0.0724	0.0195	0.005242	0.00141	0.057	0.00040
	¼	0.540	0.088	0.364	0.0303	0.1325	0.0482	0.01756	0.00639	0.104	0.00072
	⅜	0.675	0.091	0.493	0.0411	0.2430	0.1198	0.05905	0.02912	0.191	0.00133
	½	0.840	0.109	0.622	0.0518	0.3869	0.2406	0.1497	0.09310	0.304	0.00211
	¾	1.050	0.113	0.824	0.0687	0.679	0.5595	0.4610	0.3799	0.533	0.00371
	1	1.315	0.133	1.049	0.0874	1.100	1.154	1.210	1.270	0.864	0.00600
	1¼	1.660	0.140	1.380	0.1150	1.904	2.628	3.625	5.005	1.495	0.01040
	1½	1.900	0.145	1.610	0.1342	2.592	4.173	6.718	10.82	2.036	0.01414
	2	2.375	0.154	2.067	0.1722	4.272	8.831	18.250	37.72	3.355	0.02330
	2½	2.875	0.203	2.469	0.2057	6.096	15.051	37.161	91.75	4.788	0.03322
	3	3.500	0.216	3.068	0.2557	9.413	28.878	88.605	271.8	7.393	0.05130
	3½	4.000	0.226	3.548	0.2957	12.59	44.663	158.51	562.2	9.886	0.06870
	4	4.500	0.237	4.026	0.3355	16.21	65.256	262.76	1058.	12.730	0.08840
	5	5.563	0.258	5.047	0.4206	25.47	128.56	648.72	3275.	20.006	0.1390
	6	6.625	0.280	6.065	0.5054	36.78	223.10	1352.8	8206.	28.891	0.2006
	8	8.625	0.322	7.981	0.6651	63.70	508.36	4057.7	32380.	50.027	0.3474
	10	10.75	0.365	10.02	0.8350	100.4	1006.0	10080.	101000.	78.855	0.5475
	12	12.75	0.406	11.938	0.9965	142.5	1701.3	20306.	242470.	111.93	0.7773
	14	14.0	0.438	13.124	1.0937	172.24	2260.5	29666.	389340.	135.28	0.9394
	16	16.0	0.500	15.000	1.250	225.0	3375.0	50625.	759375.	176.72	1.2272
	18	18.0	0.562	16.876	1.4063	284.8	4806.3	81111.	1368820.	223.68	1.5533
	20	20.0	0.593	18.814	1.5678	354.0	6659.5	125320.	2357244.	278.00	1.9305
	24	24.0	0.687	22.626	1.8855	511.9	11583.	262040.	5929784.	402.07	2.7921
Schedule 60	8	8.625	0.406	7.813	0.6511	61.04	476.93	3725.9	29113.	47.94	0.3329
	10	10.75	0.500	9.750	0.8125	95.06	926.86	9036.4	88110.	74.66	0.5185
	12	12.75	0.562	11.626	0.9688	135.16	1571.4	18268.	212399.	106.16	0.7372
	14	14.0	0.593	12.814	1.0678	164.20	2104.0	26962.	345480.	128.96	0.8956
	16	16.0	0.656	14.688	1.2240	215.74	3168.8	46544.	683618.	169.44	1.1766
	18	18.0	0.750	16.500	1.3750	272.25	4492.1	74120.	1222982.	213.83	1.4849
	20	20.0	0.812	18.376	1.5313	337.68	6205.2	114028.	2095342.	265.21	1.8417
	24	24.0	0.968	22.064	1.8387	486.82	10741.	236994.	5229036.	382.35	2.6552
Schedule 80	⅛	0.405	0.095	0.215	0.0179	0.0462	0.00994	0.002134	0.000459	0.036	0.00025
	¼	0.540	0.119	0.302	0.0252	0.0912	0.0275	0.008317	0.002513	0.072	0.00050
	⅜	0.675	0.126	0.423	0.0353	0.1789	0.0757	0.03200	0.01354	0.141	0.00098
	½	0.840	0.147	0.546	0.0455	0.2981	0.1628	0.08886	0.04852	0.234	0.00163
	¾	1.050	0.154	0.742	0.0618	0.5506	0.4085	0.3032	0.2249	0.433	0.00300
	1	1.315	0.179	0.957	0.0797	0.9158	0.8765	0.8387	0.8027	0.719	0.00499
	1¼	1.660	0.191	1.278	0.1065	1.633	2.087	2.6667	3.409	1.283	0.00891

TABLE 5-11 (Continued)

Commercial Wrought Steel Pipe Data (15)

Schedule Wall Thickness – Per ANSI B36.10

	Nominal Pipe Size	Outside Diameter	Thickness	Inside Diameter		Inside Diameter Functions (In Inches)				Transverse Internal Area	
				d	D					a	A
	Inches	Inches	Inches	Inches	Feet	d^2	d^3	d^4	d^6	Sq. In.	Sq. Ft.
Schedule 80—cont.	1½	1.900	0.200	1.500	0.1250	2.250	3.375	5.062	7.594	1.767	0.01225
	2	2.375	0.218	1.939	0.1616	3.760	7.290	14.136	27.41	2.953	0.02050
	2½	2.875	0.276	2.323	0.1936	5.396	12.536	29.117	67.64	4.238	0.02942
	3	3.5	0.300	2.900	0.2417	8.410	24.389	70.728	205.1	6.605	0.04587
	3½	4.0	0.318	3.364	0.2803	11.32	38.069	128.14	430.8	8.888	0.06170
	4	4.5	0.337	3.826	0.3188	14.64	56.006	214.33	819.8	11.497	0.07986
	5	5.563	0.375	4.813	0.4011	23.16	111.49	536.38	2583.	18.194	0.1263
	6	6.625	0.432	5.761	0.4801	33.19	191.20	1101.6	6346.	26.067	0.1810
	8	8.625	0.500	7.625	0.6354	58.14	443.32	3380.3	25775.	45.663	0.3171
	10	10.75	0.593	9.564	0.7970	91.47	874.82	8366.8	80020.	71.84	0.4989
	12	12.75	0.687	11.376	0.9480	129.41	1472.2	16747.	190523.	101.64	0.7058
	14	14.0	0.750	12.500	1.0417	156.25	1953.1	24414.	305176.	122.72	0.8522
	16	16.0	0.843	14.314	1.1928	204.89	2932.8	41980.	600904.	160.92	1.1175
	18	18.0	0.937	16.126	1.3438	260.05	4193.5	67626.	1090518.	204.24	1.4183
	20	20.0	1.031	17.938	1.4948	321.77	5771.9	103536.	1857248.	252.72	1.7550
	24	24.0	1.218	21.564	1.7970	465.01	10027.	216234.	4662798.	365.22	2.5362
Schedule 100	8	8.625	0.593	7.439	0.6199	55.34	411.66	3062.	22781.	43.46	0.3018
	10	10.75	0.718	9.314	0.7762	86.75	807.99	7526.	69357.	68.13	0.4732
	12	12.75	0.843	11.064	0.9220	122.41	1354.4	14985.	165791.	96.14	0.6677
	14	14.0	0.937	12.126	1.0105	147.04	1783.0	21621.	262173.	115.49	0.8020
	16	16.0	1.031	13.938	1.1615	194.27	2707.7	37740.	526020.	152.58	1.0596
	18	18.0	1.156	15.688	1.3057	246.11	3861.0	60572.	950250.	193.30	1.3423
	20	20.0	1.281	17.438	1.4532	304.08	5302.6	92467.	1612438.	238.83	1.6585
	24	24.0	1.531	20.938	1.7448	438.40	9179.2	192195.	4024179.	344.32	2.3911
Schedule 120	4	4.50	0.438	3.624	0.302	13.133	47.595	172.49	625.1	10.315	0.07163
	5	5.563	0.500	4.563	0.3802	20.82	95.006	433.5	1978.	16.35	0.1136
	6	6.625	0.562	5.501	0.4584	30.26	166.47	915.7	5037.	23.77	0.1650
	8	8.625	0.718	7.189	0.5991	51.68	371.54	2671.	19202.	40.59	0.2819
	10	10.75	0.843	9.064	0.7553	82.16	744.66	6750.	61179.	64.53	0.4481
	12	12.75	1.000	10.750	0.8959	115.56	1242.3	13355.	143563.	90.76	0.6303
	14	14.0	1.093	11.814	0.9845	139.57	1648.9	19480.	230137.	109.62	0.7612
	16	16.0	1.218	13.564	1.1303	183.98	2495.5	33849.	459133.	144.50	1.0035
	18	18.0	1.375	15.250	1.2708	232.56	3546.6	54086.	824804.	182.66	1.2684
	20	20.0	1.500	17.000	1.4166	289.00	4913.0	83521.	1419857.	226.98	1.5762
	24	24.0	1.812	20.376	1.6980	415.18	8459.7	172375.	3512313.	326.08	2.2645
Schedule 140	8	8.625	0.812	7.001	0.5834	49.01	343.15	2402.	16819.	38.50	0.2673
	10	10.75	1.000	8.750	0.7292	76.56	669.92	5862.	51291.	60.13	0.4176
	12	12.75	1.125	10.500	0.8750	110.25	1157.6	12155.	127628.	86.59	0.6013
	14	14.0	1.250	11.500	0.9583	132.25	1520.9	17490.	201136.	103.87	0.7213
	16	16.0	1.438	13.124	1.0937	172.24	2260.5	29666.	389340.	135.28	0.9394
	18	18.0	1.562	14.876	1.2396	221.30	3292.0	48972.	728502.	173.80	1.2070
	20	20.0	1.750	16.5	1.3750	272.25	4492.1	74120.	1222981.	213.82	1.4849
	24	24.0	2.062	19.876	1.6563	395.06	7852.1	156069.	3102022.	310.28	2.1547
Schedule 160	½	0.840	0.187	0.466	0.0388	0.2172	0.1012	0.04716	0.02197	0.1706	0.00118
	¾	1.050	0.218	0.614	0.0512	0.3770	0.2315	0.1421	0.08726	0.2961	0.00206
	1	1.315	0.250	0.815	0.0679	0.6642	0.5413	0.4412	0.3596	0.5217	0.00362
	1¼	1.660	0.250	1.160	0.0966	1.346	1.561	1.811	2.100	1.057	0.00734
	1½	1.900	0.281	1.338	0.1115	1.790	2.395	3.205	4.288	1.406	0.00976
	2	2.375	0.343	1.689	0.1407	2.853	4.818	8.138	13.74	2.241	0.01556
	2½	2.875	0.375	2.125	0.1771	4.516	9.596	20.39	43.33	3.546	0.02463
	3	3.50	0.438	2.624	0.2187	6.885	18.067	47.41	124.4	5.408	0.03755
	4	4.50	0.531	3.438	0.2865	11.82	40.637	139.7	480.3	9.283	0.06447
	5	5.563	0.625	4.313	0.3594	18.60	80.230	346.0	1492.	14.61	0.1015
	6	6.625	0.718	5.189	0.4324	26.93	139.72	725.0	3762.	21.15	0.1469
	8	8.625	0.906	6.813	0.5677	46.42	316.24	2155.	14679.	36.46	0.2532
	10	10.75	1.125	8.500	0.7083	72.25	614.12	5220.	44371.	56.75	0.3941
	12	12.75	1.312	10.126	0.8438	102.54	1038.3	10514.	106461.	80.53	0.5592
	14	14.0	1.406	11.188	0.9323	125.17	1400.4	15668.	175292.	98.31	0.6827
	16	16.0	1.593	12.814	1.0678	164.20	2104.0	26961.	345482.	128.96	0.8956
	18	18.0	1.781	14.438	1.2032	208.45	3009.7	43454.	627387.	163.72	1.1369
	20	20.0	1.968	16.064	1.3387	258.05	4145.3	66590.	1069715.	202.67	1.4074
	24	24.0	2.343	19.314	1.6095	373.03	7204.7	139152.	2687582.	292.98	2.0346

The total pressure drop is then compared to the given source or delivery pressure to determine pipe size adequacy. This relatively quick process can be repeated for a different pipe size if the pressure drop is found to be too high or if a smaller pipe size can be used.

CAUTION: If higher pressures require a stronger pipe than Schedule 40, the calculation shown on Table 5-10 must be used in estimating pressure drop.

To estimate the pipe size for a required gas flow, more calculations are needed than for a liquid. Estimation of weight density for gasses was in the discussion of Darcy's formula, above in paragraph (2). An effective gas pressure is needed for this estimate. An effective pressure is also needed to calculate the gas flow velocity because, to deliver a given amount of gas expressed in cubic feet at standard atmospheric pressure (SCFM), an increase in system pressure will reduce the required gas velocity. The following guidelines are recommended for selecting the effective gas pressure:

(a) If the system does not require a high flow rate or if the number and types of fittings are not accurately known, a pressure drop equal to about 10 percent of the inlet pressure (P_1) should be selected. For this condition, either P_1 or the outlet pressure (P_2) can be used as the effective system pressure.

(b) If the system requires a high flow rate and if the number and types of, fittings are accurately known, a pressure drop equal to from 20 percent to 40 percent of P_1 can be selected. Since higher gas velocities may result in sonic flow across a valve, values close to 40 percent of P_1 should be used with caution. For pressure drops greater than 10 percent of the P_1, the effective system pressure should be made equal to $P_1 + P_2 / 2$. With the effective gas pressure estimated by one of the two procedures described above, the gas weight density can be calculated by using the weight density given in Table 5-5 and making the weight density proportional to the absolute pressure. (The tables in Reference 16 can be used for more accurate values.) Having been given the required gas flow in scfm, the required flow at the effective gas pressure should be estimated by the relationship:

$$\frac{P_1}{P_2} = \frac{V_2}{V_1} \qquad (3)$$

where:
P_1 = atmospheric pressure, 14.7 psia
P_2 = effective gas pressure, psia
V_1 = required flow scfm
V_2 = flow at effective pressure, cfm

Table 5-10 shows that "compressed Air, cubic feet per minute," can be used to establish the effect of velocity on pressure drop in several common pipe sizes. (The actual velocity can be determined, if desired, by dividing the compressed flow by each pipe area in square feet as given in Table 5-11). Thus, if the required flow of compressed gas (as calculated by Equation (3)) is approximated in Table 5-10, an immediate indication of the best pipe size can be obtained by an examination of the relative pressure-drop values. With some idea of the allowable pressure drop based on inlet or outlet pressure conditions, it is usually possible to select one pipe size for further examination.

CAUTION: The tabulated pressure-drop values must be increased for an increase in pipe schedule number as described in the table.

When a tentative pipe size has been selected, the total equivalent pipe length is determined as previously described, and the total pressure drop is calculated. This value must be multiplied by the ratio of the gas density at the estimated effective pressure to the density of air at 100 psia as used in Table 5-10 (0.596 pounds/feet^3) because, as shown in Equation (1), the pressure drop is proportional to the gas density.

(4) Approximation for Water, Low Flow. Let the maximum required flow in the system shown in Figure 5-3 equal 20 gallons of water per minute. An examination of Table 5-9 shows a range in velocity from 12.03 feet/second for 3/4-inch pipe to 0.868 feet/second for 3-inch pipe. If this is for general service to the hyperbaric chamber, Table 5-6 shows a reasonable velocity range of from 4 to 10 feet per second. A 3/4-inch pipe with a water flow velocity of 12.03 feet per second and a pressure drop per 100 feet of 37.8 psi seems to be on the high side, while a 1-1/4-inch pipe with a velocity of 4.29 feet per second and a pressure drop per 100 feet at 2.8 psi is definitely on the low side. Thus, a selection of 1-inch pipe with a velocity of 7.43 feet per second and a pressure drop of 10.9 psi per 100 feet appears reasonable.

The total length of pipe as shown in Figure 5-3 is 120 feet. Using figure 5-2, it is determined that the equivalent 1-inch pipe lengths for the three fittings are: (1) for the globe valve - 25 feet, (2) for the standard elbow - approximately 3 feet, and (3) for the angle valve - 15 feet. Thus, the pressure drop for the equivalent pipe length of 163 feet is 10.9 psi times 1.63 or approximately 18 psi. This does not seem excessive in terms of buying an appropriate pump or using a building water supply with a supply pressure of approximately 75 psi. On the other hand, use of 3/4-inch pipe would have resulted in a pressure drop of approximately 37.8 psi times 1.63, or about 62 psi. This would normally be excessive.

NOTE: With a short length of pipe and only one valve, use of a 3/4-inch pipe would provide a pressure drop within acceptable limits.

(5) Approximation for Water, High Flow. Let the maximum required flow in the system shown in Figure 5-3 equal 600 gallons of water per minute. An examination of Table 5-9 shows a range in velocity from 15.12 feet/second for 4-inch pipe to 2.44 feet/second for 10-inch pipe. The velocity for the 4-inch pipe seems too high according to Table 5-6, but the pressure drop is only

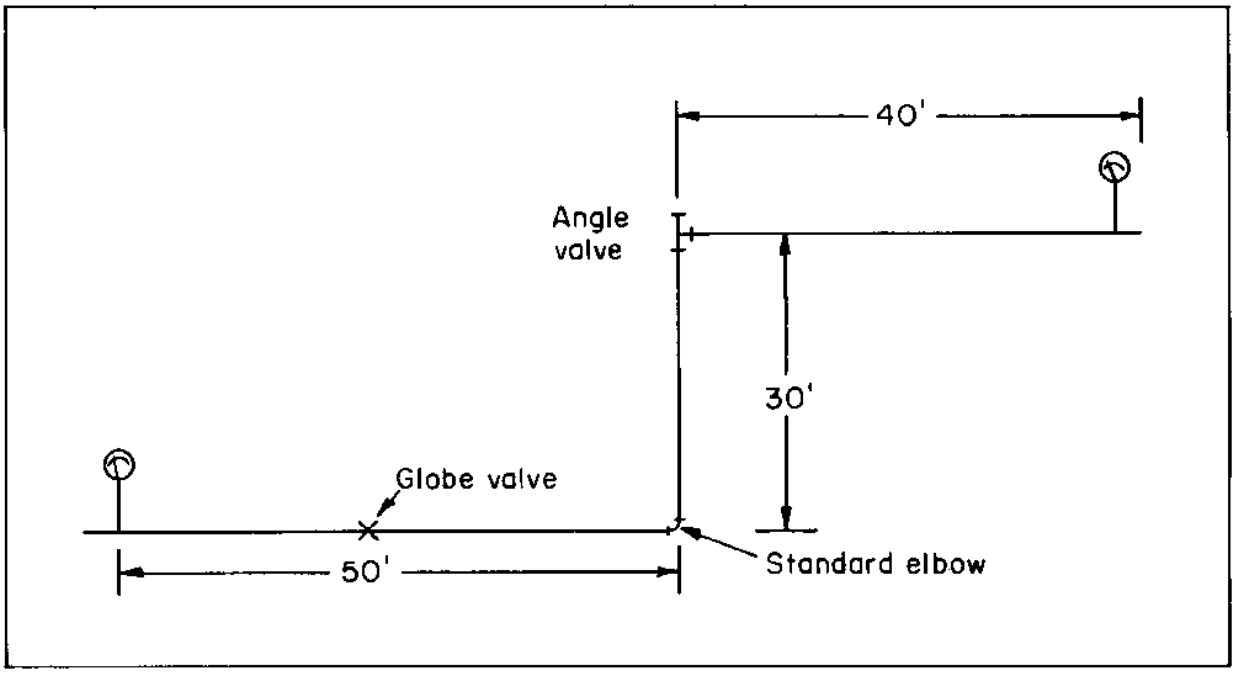

FIGURE 5-3
Example Fluid System

8.04 psi per 100 feet of pipe. The velocity for 5-inch pipe is on the high side at 9.63 feet/second, while the pressure drop is still lower at 2.55 psi per 100 feet of length. At this point it would be necessary to check on costs of 4-inch and 5-inch pipe and components, and the output pressures of candidate pumps. Complete calculations would be made for both systems to provide a basis for selection. Using only the 5-inch pipe size for this example, Figure 5-2, shows that the equivalent 5-inch pipe lengths for the three fittings are: (1) for the globe valve - 140 feet, (2) for the standard elbow - 13 feet, and (3) for the angle valve - 70 feet. The pressure drop for the equivalent length of 343 feet is 2.55 times 3.43 or about 9 psi.

(6) Approximation for Oxygen, Low Flow. Let the maximum required flow in the system shown in Figure 5-3 equal 100 scfm of oxygen from a manifold with a pressure of 250 psia. Because the flow required is low and excessive velocity of oxygen through valves can cause a fire hazard, assume that the total pressure drop is 10 percent of the inlet pressure, or 25 psi. Using 250 psia as the effective system pressure, and using the weight density of oxygen at atmospheric pressure from Table 5-5, the weight density of oxygen at 250 psia is calculated to be 1.41 pounds/feet^3. This is approximately 2.4 times the weight density of air in Table 5-10 (0.596 pounds/feet^3). The required flow of oxygen (100 scfm) can be provided at 250 psia with a flow of about 5.9 feet^3/minute (using Equation (3)). Referring to Table 5-10, it

can be seen that a compressed flow of 5.8 $feet^3$/minute will result in a pressure drop per 100 feet ranging from 23.1 psi for 3/8-inch pipe to 0.55 psi for 1-1/2-inch pipe. The candidate pipe sizes seem to be 1/2 inch, with a pressure drop of 6.90 psi, and 3/4-inch with a pressure drop of 1.62 psi. The increase in density requires that these values be increased 2.4 times to 16.6 psi and 3.9 psi, respectively. An equivalent length of 150 feet (as an estimate) will cause 25 psi pressure drop in the 1/2-inch pipe. Although 1/2-inch pipe might be selected, the selection of a 3/4-inch pipe size appears more conservative and desirable.

The total length of pipe is 120 feet. Using Figure 5-2, it is determined that the equivalent 3/4-inch pipe lengths for the three fittings are: (1) for the globe valve -20 feet, (2) for the standard elbow - 2 feet, and (3) for the angle valve - 11 feet. The pressure drop for the equivalent pipe length of 153 feet is 3.9 psi (the value in Table 5-10 corrected for density) times 1.53 or about 6 psi. This is sufficiently less than the desired maximum of 25 psi that consideration could be given to tubing with an inside diameter between 1/2-inch and 3/4-inch Schedule 40 pipe. This is particularly true with oxygen since tubing rather than pipe might have to be used for compatibility. The basic dimensions for commercially available tubing are shown in Table 5-12.

(7) Approximation for Helium, High Flow. Let the maximum required flow in the system shown in Figure 5-3 equal 2220 scfm of helium with an exit pressure (P_2) equal to 850 psia. If it is assumed that the length of pipe and types of components are accurately known, and that a high gas velocity is desirable, let P_1 - 40% P_1 = 850 psia. Therefore, P_1 = 1420 psia and the average or effective pressure = P_1 + P_2 = 1135 psia. At a pressure of 1135 psia, a flow of 28.8 $feet^3$/minute is required to supply 2220 scfm. At 1135 psia, helium has a weight density of 0.77 pound/$feet^3$. This weight density is 1.3 times the weight density of air at 100 psi.

Referring to Table 5-10, it can be seen that a flow of 28.8 $feet^3$/minute of air causes a pressure drop in 100 feet of pipe ranging from 37.9 psi for 3/4-inch pipe to 0.022 psi for 3-1/2-inch pipe. Normally, either a 1-inch pipe with a pressure drop of 10.8 psi or 1-1/4-inch pipe with a pressure drop of 2.59 psi would be the candidate pipe sizes to keep the gas velocity low. However, a high gas velocity is desired and the 3/4-inch pipe is examined first. Because of the increased density of the helium, the 37.9 psia must be multiplied by 1.3 to give an effective pressure drop for 100 feet of pipe of 49.3 psi.

As noted in Table 5-10, when a different schedule pipe is used than Schedule 40, the tabulated values must be corrected. The inside diameter of 3/4-inch Schedule 40 pipe is 0.824 inch (see Table 5-11). If Schedule 160 pipe were selected for the system the inside diameter of 3/4-inch Schedule 160 pipe (see Table 5-11) is 0.614 inch. The ratio of the two inside diameters is 1.34. This raised to the 5th power (see note on Table 5-10 under Calculations For Pipe Other Than Schedule 40) is 4.33. Thus, the pressure drop per 100 feet of Schedule 160 pipe is 4.33 x 49.3 or 214 psi.

Using Figure 5-2 with an inside pipe diameter of 0.6 inch (for Schedule 160 pipe) it is found that the equivalent pipe lengths for the 3 components are

TABLE 5-12
Typical Dimensions for Commercially Available Tubing

Outside Diameter d_o (in.)	Wall Thickness t(in.)	Inside Diameter d_i (in.)	Outside Diameter d_o (in.)	Wall Thickness t(in.)	Inside Diameter d_i (in.)	Outside Diameter d_o (in.)	Wall Thickness t(in.)	Inside Diameter d_i (in.)	Outside Diameter d_o (in.)	Wall Thickness t(in.)	Inside Diameter d_i (in.)
1/8	0.028	0.069	1/2	0.035	0.430	7/8	0.049	0.777	1-1/4	0.120	1.010
	0.032	0.061		0.042	0.416		0.058	0.759			
	0.035	0.055		0.049	0.402		0.065	0.745	1-1/2	0.065	1.370
				0.053	0.384		0.072	0.731		0.072	1.356
3/16	0.032	0.1235		0.065	0.370		0.083	0.709		0.083	1.334
	0.035	0.1175		0.072	0.358		0.095	0.685		0.095	1.310
				0.083	0.334		0.109	0.657		0.109	1.282
1/4	0.035	0.180								0.120	1.260
	0.042	0.166	5/8	0.035	0.555	1	0.049	0.902			
	0.049	0.152		0.042	0.541		0.058	0.884	1-3/4	0.065	1.620
	0.058	0.134		0.049	0.527		0.065	0.870		0.072	1.606
	0.065	0.120		0.058	0.509		0.072	0.856		0.083	1.584
				0.065	0.495		0.083	0.834		0.095	1.560
5/16	0.035	0.2425		0.072	0.481		0.095	0.810		0.109	1.532
	0.042	0.2285		0.083	0.459		0.109	0.782		0.120	1.510
	0.049	0.2145		0.095	0.435		0.120	0.760		0.134	1.482
	0.058	0.1965									
	0.065	0.1825	3/4	0.049	0.652	1-1/4	0.049	1.152	2	0.065	1.870
				0.058	0.634		0.058	1.134		0.072	1.856
3/8	0.035	0.305		0.065	0.620		0.065	1.120		0.083	1.834
	0.042	0.291		0.072	0.606		0.072	1.106		0.095	1.810
	0.049	0.277		0.083	0.584		0.083	1.084		0.109	1.782
	0.058	0.259		0.095	0.560		0.095	1.060		0.120	1.760
	0.065	0.245		0.109	0.532		0.109	1.032		0.134	1.732

(1) for the globe valve - 16 feet, (2) for the standard elbow - 2 feet, and (3) for the angle valve - 8 feet. With a pipe length of 120 feet, the total equivalent pipe length is 146 feet. This gives a total estimated pressure drop of 312 psi. Since this is less than the estimated 570 psi (1420 psia -850 psia), a lower inlet pressure can be used.

With the size of the pipe known and the pressure conditions approximated, it is now possible to obtain a closer approximation by using Equation (1). If an inlet pressure of 1250 psia is used, giving an effective system pressure of 1050 psia $\sqrt{P_1 + P_2}$, the following values for Equation (1) can be calculated:

$$[rho] = 0.71\ lb/ft^3 \text{ from } \frac{(0.01 \text{ - see Table 5-5})}{14.7} = \frac{p}{1050}$$

f = 0.026 (see Figure 5-1 for 3/4-inch, Schedule 160 pipe, turbulent flow)
L = 146 ft (see above)
V = 252 ft/sec.

(a) Calculate compressed flow from Equation (3):

$$\frac{14.7}{1050} = \frac{V_2}{2220} \text{ and } V_2 = 31.1\ ft^3 \text{ or}$$

$$Q = 31.1\ ft^3/min.$$

(b) Next calculate flow velocity:

$$V = \frac{Q}{A} \text{ or } \frac{31.1}{0.00206 \text{ (see Table 5-11)}}$$

V = 15,100 ft/min or 252 ft/sec

D = 0.512 ft (see Table 5-11

then using equation (1):

$$[DELTA]P = \frac{0.71 \times 0.026 \times 146 \times 252^2}{144 \times 0.512 \times 2 \times 32.2}$$

[DELTA]P = 360 psi

Since this is close to the permissible pressure drop of 400 psi, it can be estimated that the inlet pressure can be close to 1250 psi.

3. DESIGN FOR PRESSURE. The design of a piping system for pressure capability requires that a design pressure P and a design temperature T be established for the piping system. The design pressure must not be less than the maximum difference in pressure across the pressure boundary for any normal operating condition. The design temperature must not be less than the actual metal temperature which exists for any specified normal operating condition.

a. Minimum Wall Thickness, Straight Pipe Under Internal Pressure.

(1) The minimum wall thickness of pipe or tubing shall not be less than:

$$t_m = \frac{PD_o}{2SE + 0.8P} + A \qquad (4)$$

$$t_m = \frac{Pd + 2SEA = 0.8PA}{2\ (SE - 0.6P)} \qquad (4A)$$

Design Pressure shall not exceed:

$$P = \frac{2SE\ (t_m - A)}{D_o - 0.8\ (t_m - A)} \qquad (5)$$

$$P = \frac{2SE\ (t_m - A)}{d - 0.8\ (t_m - A) + 2\ t_m} \qquad (5A)$$

where

t_m = minimum required wall thickness, inches (millimeters)

(a) If pipe is ordered by its nominal wall thickness, the manufacturing tolerance on wall thickness must be taken into account. After the minimum pipe wall thickness, t_m, is determined, this minimum thickness shall be increased by an amount sufficient to provide the manufacturing tolerance allowed in the applicable pipe specification. The next heavier commercial wall thickness shall then be selected from thickness schedules such as contained in ANSI B 36.10 or from manufacturers' schedules for other than standard thickness.

(b) To compensate for thinning in bends refer to paragraph 3 of Section 4.

P = internal design pressure, psi (kPa) gauge

Note: When computing the design pressure for a pipe of a definite minimum wall thickness by formula (5) or (5A) the value of P obtained by these Formulas may be rounded out to the next higher unit of 10.

D_o = outside diameter of pipe in inches (millimeters). For design calculations, the outside diameter of pipe as given in tables of standards and specifications shall be used in obtaining the value of t_m.

d = inside diameter of pipe inches (millimeters). For design calculations, the inside diameter of pipe is the maximum possible value allowable under the purchase specification.

SE = maximum allowable stress in material due to internal pressure and joint efficiency at the design temperature, in psi (kPa). The value of SE shall not exceed the value given in Appendix A of the B 31.1 Code. For materials to be brazed, a joint efficiency of 0.8 shall be used.

A = an additional thickness in inches (millimeters).

1. To compensate for material removed in threading, grooving, etc.,
2. To provide for mechanical strength of the pipe for extreme conditions of misapplied external loads or for mechanical abuse.
3. To provide for corrosion and/or erosion.

(2) Additional Wall Thickness, Threaded Pipe. While the thicknesses determined from Formula (4) or (4A) are theoretically ample for both bursting pressure and material removed in threading, the following minimum requirements are mandatory to furnish added mechanical strength.

(a) Where steel or stainless steel pipe is threaded the pipe shall have a minimum ultimate tensile strength of 48,000 psi (330 MPA) and a weight at least equal to Schedule 80 of ANSI B 36.10.

(b) Where threaded brass or copper pipe is used for the services described in (2) (a) above, it shall have a wall thickness at least equal to that specified above for steel pipe of corresponding size.

b. Minimum Wall Thickness, Straight Pipe Under External Pressure. For determining wall thickness and stiffening requirements for straight pipe under external pressure the procedures outlined in Para UG-28, UG-29, and UG-30 of Section VIII, Division 1, of the ASME Boiler and Pressure Vessel Code shall be followed.

c. Allowances.

(1) Corrosion or Erosion. When corrosion or erosion is expected, an increase in wall thickness of the piping shall be provided over that required by other design requirements. This allowance in the judgement of the designer shall be consistent with the expected life of the piping.

(2) Threading and Grooving. The calculated minimum thickness of piping (or tubing) which is to be threaded shall be increased by an allowance equal to thread depth; dimension h of ANSI B 2.1 or equivalent shall apply. For machined surfaces or grooves, where the tolerance is not specified, the tolerance shall be assumed to be 1/64 inch (0.40 mm) in addition to the specified depth of cut.

4. SYSTEM DETAILING AND FINAL FLOW ANALYSIS. For any category I, II, III, or IV piping system, a detailed system layout, consisting of a complete physical description of the piping system and its supports and anchors, is necessary. The preparation of a system layout is discussed in the following paragraphs.

a. Final Routing of Pipe and Selection of Supports and Anchors. The tentative routing of the piping systems selected for the preliminary flow calculations must be examined to determine that all system requirements have been adequately met. These requirements will include such items as operation (are the controls properly located), maintenance (can the systems be repaired and cleaned), and safety (are high pressure piping systems, particularly O_2 lines, adequately shielded to protect personnel and lines). Routing modifications to meet such requirements can often increase system pressure drops significantly.

With routing of the piping systems finally determined, supports and anchors for the systems can be selected. The term "support" is used in a general sense and includes such items as sliding supports, guides, spring hangers, constant load hangers, braces, and shock absorbers. The term anchor refers to any support or component (such as a pump or tank) which is considered to be essentially immovable. Chapter 15 of 1970 Fluid Power Reference Issue (Reference 17) will provide general background information. If the initial system layout does not prove to be satisfactory when analyzed structurally (Section 5, paragraph 5(a) (2)), changes in the layout will be required until a satisfactory analysis is obtained.

b. Final Fitting and Valve Selection. System detailing requires the finalization of the locations and types of fittings and valves. Consideration must also be given to the seals for separable joints between fittings, valves, and piping.

(1) Fitting Selection. Pipe and tube fittings have become quite standardized over the years. A number of standards acceptable for hyperbaric facilities are listed in Reference 8 and MIL-STD-438, Schedule of Piping, Valves, Fittings, and Associated Piping Components for Submarine Service (Reference 18). These standards indicate fittings for various types of fluid systems. Most fitting manufacturers will provide a list correlating their fittings with military and industrial standards.

(2) Valve Selection. Although many types of valves have become standardized over the years, a wide variety of nonstandard valves are available for the different fluid systems. Valve types vary because of the type of fluid control desired, the size of the pipe or tubing, the force available to operate the valve, and other factors. Numerous articles in the trade literature summarize valve types, factors involved in valve selection, and qualitative suggestions concerning installation and maintenance. A typical publication is contained in the 1970 Fluid Power Reference Issue (Reference 17). Detailed information can be found in valve manufacturer’s catalogs.

An accurate measurement of the flow resistance of candidate valves is required for the detailed calculations to determine system flow characteristics. The piping designer must determine that the manufacturer’s measurements of flow resistance can be used in the formulas required by Flow of Fluids Through Valves, Fittings, and Pipe (Reference 15) and that the measurements were made with the valve mounted similar to that proposed for the piping system.

Valve seating and bearing materials can cause many problems in gaseous and seawater systems. Oxygen systems in particular require a careful selection of such materials. Some design guidance on material compatibility is given in the subsection entitled Fluid Compatibility. Guidance can often be obtained from a valve manufacturer. The piping designer should obtain an accurate description of every material in any valve, including lubricants in an oxygen system or in any system which carries gas to the chamber. Suitable stress values must be selected for the pressure-retaining materials, and compatibility checks should be made for all materials in the valve.

(3) Pipe Joint Seals. MIL-T-27730 is a specification for tetrafluoroethylene tape and for its use as an antiseize and sealant of pipe threads for liquid and gaseous oxygen systems of 2000 psi and less. The use of this tape is widespread and its use is suitable as an antiseize and sealant material in any piping system for a hyperbaric chamber. The use of other pipe thread sealant compounds requires a compatibility analysis and approval for the proposed system.

(4) Straight Thread Tube Seals. MS-33649 and MS-16142 give boss dimensions for military straight thread tube fitting O-ring gaskets. Seal manufacturers can supply O-ring compounds of several types for use with the dimensions. Elastomeric materials are available that are compatible with all of the candidate fluids except oxygen. For Oxygen systems, Viton and Kel-F are preferred.

CAUTION: Teflon O-rings have shown a significant tendency to leak because of cold flow of the material.

(5) Flanged Joint Seals. Considerable experience has been gained concerning the use of flat gaskets, O-rings, and metallic rings as seals for pipe flanges. Chapter 12 of Survey Report on Structural Design of Piping Systems and Components, Rodebaugh and Pickett, (Reference 19) presents a good summary of this experience. The ASME Code described standardized procedures for designing flanged joints and these procedures are discussed in Reference 19. Considerable help can also be gained from manufacturers of pipe fittings and seals concerning the proper joint design and installation procedures for various fluid systems.

c. Operations and Maintenance. The plumbing of a piping system for easy operation of hand operated valves is a major piping consideration leading to the use of a number of fittings and inclusion of gages and flow meters. Such additional complexities are almost always identified in the overall systems analysis and it is thus important that a thorough system specification be available.

Provisions for maintenance stem from an analysis of potential malfunctions in the piping system. Moving parts in valves must be examined and replaced periodically, and gages and meters must be calibrated. The piping layout must include provision for the maintenance of such components.

d. Draining and Cleaning. Flasks and dead-end sections of piping in breathing gas systems should be provided with drains.

e. Thermal Insulation. Thermal insulation is not believed to be a major consideration for piping for hyperbaric chambers.

f. Possible Reclassification. During the selection of piping materials described previously in Section 2, appropriate Category I, II, III, or IV ratings were assigned to each fluid system. When the detailed system layout has been completed each fluid system and subsystem is reexamined to determine whether the proper classifications have been used and to determine whether simple system changes might permit the reclassification of a Category I and II system to a Category III and IV system. Considerably fewer calculations are needed for the structural analysis of Category III and IV systems and a wider choice of ASME-approved materials is available for Category III and IV systems.

g. Detailed Fluid Flow Calculations. As a last step before the structural analysis of the piping system described below, detailed calculations are made to check the fluid flow, pressure drop, and power required for each fluid system. In addition to checking previous approximations, these calculations permit a final evaluation of the tentatively selected pipe size and wall thickness. Where borderline situations are encountered, it may be possible to reduce the pressure drop sufficiently to reduce wall thickness, reduce inlet pressure, or select a smaller pump or compressor.

The detailed calculation of flow and pressure drop in a piping system necessitates the understanding and use of many more quantities and relationships than were described in the section on flow approximation. There is no better overall approach to this problem for the designer of the hyperbaric piping system than to obtain a copy of Flow of Fluids Through Valves, Fittings, and Pipe (Reference 15), study it in detail, and use its suggested approaches to accomplish the necessary calculations. The material in this publication is greatly simplified for the design engineer. The equation symbols are well-defined and used uniformly and a number of helpful examples are given. For cryogenic piping systems, the designer should refer additionally to the appropriate chapter in Piping Handbook, Crocker, S., (Reference 14). NAVSHIPS 0994-003-7010, U.S. Navy Diving-Gas Manual (Reference 16) provides convenient values of gas densities for typical hyperbaric chamber conditions.

5. STRUCTURAL ANALYSIS. The degree of structural analysis necessary when designing the various classes of piping systems is discussed in the following paragraphs.

a. Category I and II Piping Systems.

(1) Structural Design Specification. In order to conduct the structural analysis required for Category I and II piping systems, it is necessary to prepare a structural design specification which postulates all significant loadings that will be imposed on the piping system during its lifetime. Preparation of an appropriate structural design specification is an exacting task. In general, inputs from both that engineer who is cognizant of the overall function of the hyperbaric chamber complex and the piping specialist are needed. Philosophically, the purpose of the structural design specification is to force one or more competent engineers to carefully list what the piping system is intended to do and what might happen to damage the piping system. The analysis then makes a rigorous engineering evaluation of the loadings and hazards to

insure that all reasonable precautions have been taken to preclude rupture of the piping system pressure boundary. The structural specification should include:

(a) A description of the functions of the piping system.

(b) Designation of the boundaries; for example, where the piping system starts and ends.

(c) Magnitude of the displacements which will be imposed on the piping system by the connected equipment and intermediate attachments.

(d) Magnitude of the loads from the piping system that are acceptable to the connected equipment.

(e) Internal loading history (including tests) and the Design Pressure.

(f) Temperature history, or fluid flow data from which the temperature history can be derived, and the Design Temperature.

(g) Environmental conditions; for example, wind, snow, earthquake, corrosive atmosphere.

(h) Possibilities of vibration, water hammer, or other shock loadings.

(i) Need for protection against accidental damage or abuse. The structural design specification must categorize the postulated occurrences or hazards into either normal, upset, emergency, faulted, or testing conditions. The following definitions apply.

Normal and Upset Conditions: Any condition which is a normal part of the system operation.

Emergency Conditions (infrequent incidents): Those deviations from normal system operation which are not expected to occur more than 25 times during the life of the system; for example, earthquakes, water hammer.

Faulted Conditions: Not to be used in this Section.

Testing Conditions: Up to 10 of the tests permitted, including leak tests. Those tests in excess of 10 shall be included in the fatigue evaluation.

NOTE: The structural design specification shall be prepared by the owner of the hyperbaric chamber complex or his agent (herein after called the owner). A copy of the structural design specification shall be kept by the Owner for the life of the complex.

(2) Analysis Procedure for Category I and II Piping System. The structural analysis of Category I and II piping systems shall conform to the requirements of ANSI B 31.1 (Reference 2). Insofar as pressure loading is concerned, the analysis involved is relatively simple. This kind of analysis has been highly developed in the piping industry. Chapter 4 of Expansion and Flexibility (Reference 14) is recommended for general background information. Of the many computer programs that have been developed for this type of analysis, one that is widely used is described on page 3-12 of Survey Report on Structural Design of Piping Systems and Components (Reference 19). This program can be purchased at a nominal cost. While a piping system analysis if primarily used to establish moments and forces due to restraint of thermal expansion of the piping, it is also used to establish moments and forces due to weight loads. Extension of the referenced analysis is required for dynamic loads such as water hammer.

Where significant temperature changes occur in the fluid, an analysis is also required in order to establish the magnitude of the temperature gradient. See Reference 19, Chapter 16, Thermal Stresses in Piping Components, for further information on this subject. The designer will also want to include analysis of the effects of differential foundation movement in terms of additional stress on the piping system.

(3) Analysis Procedure for Category I and II Valves. The structural analysis of a Category I and II valve shall show that the design of the valve fulfills the structural design requirements of ANSI B 31.1. These requirements include pressure-temperature ratings and hydrostatic shell test pressures.

(4) Stress Report. A stress report contains both the drawings and the stress analysis calculations. The stress analysis calculations shall establish that the piping and valve designs shown by the construction drawings comply with the requirements of the Structural Design Specification (Section 5, paragraph 5(a) (1)), and with the requirement of the analysis procedure (Section 5, paragraph 5(a)(2)). Any computer programs used in the calculations shall be properly identified and described in the Stress Report to facilitate independent verification.

The Stress Report shall be certified by a registered Professional Engineer, competent in the design of piping, after he has assured himself that it does comply with the necessary requirements. The Owner shall review the Stress Report to the extent necessary to determine that it has satisfied the requirements of the Design Specification and shall so certify. A copy of the Stress Report shall be kept by the Owner for the life of the complex.

The engineer who prepares the Stress Report shall inspect the completed hyperbaric chamber complex to determine whether the actual construction is in accordance with assumptions and drawings used in the Stress Report. Any discrepancies shall be reconciled before certification for operation is granted. He shall also observe the initial hydrostatic test and initial period of operation to determine whether unanticipated conditions exist (for example, vibration, water hammer). If such conditions exist, he shall notify the Owner and necessary corrective action must be taken. A record of these inspections shall be included in the Stress Report.

b. Category III and IV Piping Systems.

(1) Design Information. In addition to the Design Pressure, Design Temperature, and information from the System Layout, the piping system designer must obtain:

(a) The anticipated number of temperature cycles.

(b) The magnitude of the displacements which will be imposed on the piping system by the connected equipment and intermediate attachments.

(c) The magnitude of the loads from the piping system acceptable by the connected equipment.

(2) Analysis Procedure for Category III and IV Piping Systems. The structural analysis of Category III and IV piping systems shall conform to the requirements of NAVFAC TS 15401 (Reference 13). The analysis procedure discussed herein is generally analgous to that required for commercial piping. However, neither cycles of pressure loading nor temperature gradients need be considered.

(3) Analysis Procedure for Category III and IV System Valves. The structural analysis of a Category III and IV system valve shall show that the design of the valve fulfills the structural design requirements of ANSI B 31.1 (Reference 2).

While ANSI B 16.5 (Reference 20) is entitled Steel Pipe Flanges and Flanged Fittings, it is nevertheless the primary standard for steel valves sold in the United States. ANSI B 16.5 controls steel valve designs by prescribing:

(a) Minimum wall thickness.

(b) Dimensions of flanges and bolting, for flanged-end valves.

(c) Dimensions of welding ends, for welding end valves.

(d) Face-to-face or end-to-end dimensions (by reference to ANSI B 16.10).

(e) Pressure-temperature ratings.

(f) Minimum hydrostatic test pressure (for the body, not the seat).

(4) Stress Report. A Stress Report is not required for Category III and IV piping systems. However, it is recommended that the Owner obtain from the contractor a certification that the piping system meets the requirements of NAVFAC TS 15401 (Reference 3).

6. NOISE CONSIDERATIONS.

a. Noise Sources. The primary source of noise in hyperbaric chambers is usually gas flow in pipes. Occasionally the blower for gas circulation in the atmosphere control loops are noise contributors. Also, care must be exercised when selecting electric motors for pumps, blowers, or other required service, because some motors have objectional noise characteristics when connected to a chamber or piping system. Quantitative information describing ambient noise in the diving environment is almost nonexistent. (See Reference 21, Summitt, J.K., and Reimers, S.D., Noise: A Hazard to Divers and Hyperbaric Chamber Personnel.) Based on general experience, pneumatic noise in manned hyperbaric chambers can cause two types of problems: (1) a reduction in diver efficiency resulting from fatigue and/or poor communications, and (2) temporary or permanent partial loss of hearing. OPNAV Instruction 6260.2 (Reference 22) establishes an occupational noise control and hearing conservation program. The following information provides guidance for acceptable noise levels in hyperbaric chambers, however, the current issue of OPNAVINST 6260.2, Hearing Conservation Program, should be consulted when designing and testing hyperbaric systems. The following information has been excerpted from OPNAVINST 6260.2, and is applicable to sound levels in the hyperbaric environment.

"(1) The analysis of a noise environment and its hazard potential is a complex task which is highly constrained by the nature of the particular activity and is subject to revisions imposed by facility updating and equipment changes. Assessment of the potential hazard of noise exposure shall be performed by an industrial hygienist.

(2) In the absence of an industrial hygienist assessment to the contrary, personnel exposed to noise levels of 85 dBa or greater or 140 dB peak sound pressure level for impact or impulse noise should be considered at risk, and shall be identified for hearing testing. The noise shall be considered as potentially hazardous and appropriate measures to control the exposure shall be instituted.

(3) It shall be mandatory for all personnel exposed to high level noise associated with gunfire, artillery, or missile firing to wear hearing protective devices regardless of length of exposure, or the technical/ engineering controls in effect.

(4) No individual shall be exposed for any period of time to steady state or interrupted steady state sound levels exceeding 115 dBa or to impulse or impact noise which exceeds 140 dB peak sound pressure level without the use of hearing protective devices. Occupational noise exposures which exceed these limits should be controlled by the most feasible technological/engineering methodology and administrative controls. The use of personal hearing protective devices shall be permitted for the control of an individual’s exposure while engineering efforts are being pursued. Such devices shall be used as a matter of routine in those areas/situations where it has been demonstrated that engineering controls are not feasible.

c. Labeling of Hazardous Noise Areas and Equipment. Navy work areas or equipment which produce sound pressure levels of 85 dBa or greater or 140 dB peak sound pressure level shall be appropriately labeled, NAVMED 6260.2.

Hazardous Noise Warning Decal, 8" x 10-1/2", and the NAVMED 6260.2A, Hazardous Noise Labels (displayed on hand tools), 1" x 1-1/2", are the approved decals and labels for appropriately marking noise hazardous areas or equipment."

b. Acceptable Noise Levels. Few quantitative design guidelines exist relative to acceptable noise levels in hyperbaric chambers for diver efficiency and communications. Table 5-13 shows acceptable ranges of sound levels and an upper limit above which there is marked personnel efficiency decrease. It is, of course, desirable to maintain sound levels at the lower end of the range. The upper part of the range is acceptable for short periods of time.

TABLE 5-13
Sound Level Considerations in
Small Compartments (5.13)

Suggested Limits of Sound Levels for Hyperbaric Chambers					
	In Rest Area		In Work Area		
Octave Band	Lowest Practical	Desirable Maximum	Lowest Practical	Desirable Maximum	Practical Upper Limit
38-75	75	85	85	100	105
75-150	65	75	75	95	105
150-300	55	65	65	90	100
300-600	50	60	60	85	95
600-1200	45	55	55	75	85
1200-2400	45	55	55	65	75
2400-4800	45	55	55	60	70
4800-9600	40	50	50	55	65

(1) For exposures of 8 hours or less, the levels established by OPNAVINST 6260.2 should be complied with.

(2) For exposures exceeding 8 hours per day, as in saturation diving, an interim allowable noise exposure level has been established by the Bureau of Medicine and Surgery.

The maximum allowable sound pressure levels (SPL) in decibels (dBa) for steady-state background noise from environmental control machinery, and for intermittent peak noise exposure instances not exceeding 15 minutes duration, are as follows:

(a) Disregard steady-state noise levels if intensity is 85 dB or less.

(b) Intermittent Peak Noise (compression, decompression, and ventilating noises):

Daily Number of Exposures	Maximum Allowable SPL
1	105 dB
4	100 dB
8	95 dB

Variations to this table should be based on more detailed information and BUMED should be consulted.

c. Noise Control. Little detailed guidance can be given in the control of gas flow noise in hyperbaric chambers. Because of the hazards of fire, selection of sound absorbing materials become a problem. However, three noise reducing techniques that can be used aggressively are summarized briefly:

(1) Minimize Air Flow Rate. Acoustic power in an air-flow system varies as the fifth power of the flow rate. For example, if an air-moving system delivers just 10 percent more air flow than required, the overall sound level can be expected to increase by 60 percent. Therefore, it is necessary to minimize the excess air flow in a pneumatic system if the sound level is to be kept within acceptable limits.

(2) Minimize Resistance to Air Flow. Air flowing around or against surfaces produces turbulence, and turbulence is a potential source of sound, The turbulence energy content determines the magnitude of the sound. Turbulence can be minimized by:

(a) Using short, streamline flow paths.

(b) Using large cross sections.

(c) Minimizing abrupt discontinuities and changes in flow path.

(d) Eliminating flow path obstructions.

(e) Keeping boundary surfaces smooth.

(f) Using turning vanes.

(3) Minimize Line-of-Sight Transmission. The radiative sound path from the noise source to the surrounding air should be made as indirect as possible, and barriers in the line-of-sight path should be as massive as practical. This approach could include the construction of a plenum chamber exterior to the hyperbaric chamber for particularly high air flows. The designer should also investigate available mufflers, which can reduce noise levels appreciably. Caution should be exercised however, as muffler fillers cannot be either flammable or toxic.

7. COLOR CODE FOR PIPING SYSTEMS. All pipe and tubing in a hyperbaric installation must be color coded and labeled to indicate contents, function, direction of flow and possible hazards.

All lines must be identified and labeled preferably according to MIL-STD-1247, Markings, Functions, and Hazard Designations of Hose, Pipe, and Tube Lines for Aircraft, Missile and Space Systems (see Reference (24)), except for color.

A redundant identification system shall be used to identify each type of gas and primary hazard, both by color and by word or letter symbol.

COLOR CODE FOR SHORE BASED SYSTEMS

Gas System	Designation	Color Paint
Helium	He	Buff
Oxygen	O	Green
Helium-Oxygen mix	He-O	Buff and Green
Nitrogen	N	Light Gray
Exhaust	E	Silver
Air (low pressure)	ALP	Tan
Air (high pressure)	AHP	Dark Gray
Chilled Water	CW	Blue and White
Hot water	HW	Red and White
Potable Water	FW	Blue

The color code for AFLOAT and Portable systems is the same, except that high and low pressure air are both colored black.

REFERENCES

1. MIL-STD-882 System Safety Program Requirements.

2. ANSI B 31.1 Code for Power Piping.

3 NAVFAC TS-15401 Plumbing.

4. Uhlig, Herbert, H., The Corrosion Handbook, John Wiley & Sons, Inc.

5. MIL-STD-889 Dissimilar Metals.

6. NAVFAC INST 11012.128 High Pressure Gaseous Oxygen and Nitrogen Piping at LOX/LN└2┘ Storage, Vaporizing, and Transfer Generation Facilities.

7. National Fire Protection Association Codes
   - 50 Bulk Oxygen Systems at Consumer Sites.
   - 51 Oxygen-Fuel, Welding, Cutting Gaw Systems.
   - 56D Hyperbaric Facilities.
   - 56F Nonflammable Medical Gas Systems.

8. MIL-STD-777 Schedule of Piping, Valves, Fittings, and Associated Piping Components for Naval Surface Ships.

9. MIL-STD-1627 Bending of Pipe or Tube for Ship Piping Systems.

10. ANSI B 36.10 Welded and Seamless Wrought Steel Pipe.

11. ANSI B 36.19 Stainless Steel Pipe.

12. NAVSEA 0900-LP-001-7000, Fabrication and Inspection of Brazed Piping Systems.

13. AWS Brazing Manual.

14. Crocker, S., and King, R.C., Piping Handbook, McGraw-Hill Book Company, New York, N.Y.

15. Flow of Fluids Through Valves, Fittings, and Pipe, Technical Paper No. 410, Crane Company, Chicago, Illinois 60632.

16. NAVSHIPS 0994-003-7010, U.S. Navy Diving-Gas Manual.

17. 1970 Fluid Power Reference Issue, Volume 42, No. 22, Machine Design, Penton Building, Cleveland, Ohio 44113

18. MIL-STD-438 Schedule of Piping, Valves, Fittings, and Associated Piping Components for Submarine Service.

19. Rodabaugh, E.C., and Pickett, Survey Report on Structural Design of Piping Systems and Components, TID-25553, December 1970. Available from Clearinghouse for Federal Scientific and Technical Information, National Bureau of Standards, U.S. Department of Commerce, Springfield, Virginia 22151.

20. ANSI B 16.5 Steel Pipe Flanges and Flange Fittings.

21. Summit, J.K., and Reimers, S.D., Noise: A Hazard to Divers and Hyperbaric Chamber Personnel, Naval Research Report 5-71, Navy Experimental Diving Unit, Washington, D.C. 20390, May 1971.

22. OPNAV INSTRUCTION 6260.2 Hearing Conservation Program.

23. Data from Ianuzzi, A.P., NAVFAC Headquarters Code 04B.

24. MIL-STD-1247 Markings, Functions, and Hazard Designations of Hose, Pipe, and Tube Lines for Aircraft, Missile and Space Systems.

CHAPTER 6. LIFE SUPPORT SYSTEMS

1. SCOPE. This chapter presents criteria for the design, fabrication, and protection of the life support systems which furnish the PV with the bodily requirements of human occupants at elevated pressures. The atmosphere for breathing is supplied by the air system, gas system, and auxiliary breathing system. Food is supplied by the nutrient system. Water for drinking, washing, shower, and toilet is supplied by the potable water system and the waste water is removed by the sanitary system. All of these systems must be controlled and monitored.

Section 1. ATMOSPHERE REQUIREMENTS

1. ATMOSPHERE. The mixture and quantity requirements for breathing gas in hyperbaric facilities are determined by the physiological response of the human body when exposed to elevated pressures. The breathing mechanisms that serve to regulate partial pressures of oxygen and carbon dioxide in the blood at sea level serve equally well at higher pressures if the partial pressures of oxygen, nitrogen, and carbon dioxide, as well as the respiratory volume, are similar to those at sea level. Medical research has provided sufficient information on physical tolerance to partial-pressure levels to permit safe selection of both composition and consumption requirements of breathing gas for hyperbaric facilities. This section suggests ranges and limits for composition, consumption, and temperature-humidity of required breathing gas for chamber occupants.

2. BREATHING GAS COMPOSITION REQUIREMENTS. Gas, in order to serve as a breathing medium, must conform to certain limits. The various problems connected with specification of gas composition are discussed below.

a. Oxygen Concentration. Air is used as a breathing gas only for relatively low pressures (to 300 feet seawater for hyperbaric facilities) because nitrogen and oxygen become toxic at the elevated partial pressures of compressed air, The percentage of oxygen in the breathing mixture must be reduced with increasing pressure to maintain the oxygen partial pressure within a range of about 0.21 to 1.2 atm (atmospheres absolute pressure). For long exposure periods, the mixture should contain oxygen at a partial pressure between 0.21 and 0.50 atm. U.S. Navy practice for saturation diving missions is to maintain the oxygen partial pressure between 0.30 and 0.32 atm. In order to maintain blood oxygen levels within acceptable limits, oxygen partial pressure is held nearly constant regardless of total pressure, and the remaining pressure is provided by increasing the proportion and partial pressure of the diluent gas.

b. Anoxia an Oxygen Toxicity. Figure 6-1 relates the percentage of oxygen in the breathing mixture to pressure depth, and to oxygen partial pressure in both psia and atm. The curves show a large area within which mixtures are physiologically acceptable, bounded on the lower side by curves defining different levels of anoxia (oxygen deficiency) and on the upper side by levels of oxygen toxicity. It will be noted in Figure 6-1 that the first symptoms of anoxia occur where oxygen partial pressure falls to 0.16 atm, and

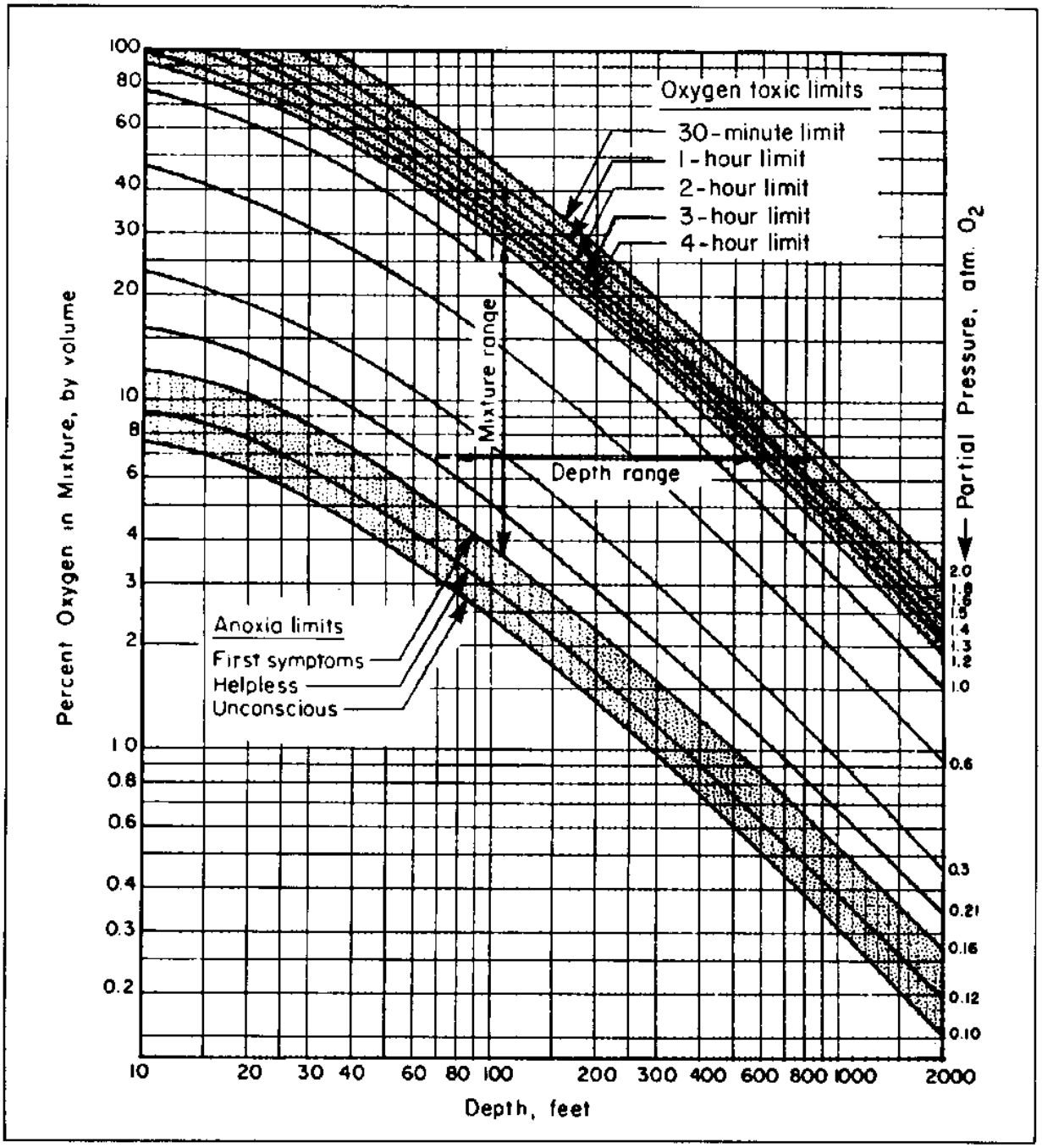

FIGURE 6-1

Percentage of Oxygen in Breathing Mixture as a Function of Depth and Oxygen Partial Pressure (1)

$$\text{Percent } O_2 = \frac{\text{Partial pressure } O_2\text{, atm} \times 100}{\text{Seawater pressure, atm}}$$

of Depth and Oxygen Partial Pressure (1)]

that the inhabitant becomes helpless at an oxygen partial pressure of 0.12 atm. In the region of high oxygen concentrations, it may be seen that oxygen toxicity limits the maximum partial pressure for long-term exposure to about 1.2 atm, but that higher concentrations can be tolerated for short periods. These toxicity limits are imposed by effects on the central nervous system that result in unconsciousness and convulsions. A different limit is encountered in exposures over extended periods, which is imposed by lung irritation and eventual lung damage. This occurs with 10 percent incidence in a 14-day period with an oxygen partial pressure of 0.6 atm. In order to avoid pulmonary irritation, present practice in exposures for extended periods is to limit oxygen partial pressure to about 0.3 atm. (See Reference (1), NAVSHIPS 0994-003-7010, U.S. Navy Diving-Gas Manual and Reference (2), Lambertson, Limitations and Breakthroughs in Manned Underseas Activity.)

c. Oxygen versus Depth Ranges. From inspection of Figure 6-1 it is evident that, at any fixed pressure, it is feasible to breathe a wide range of mixtures without ill effects. For example, at a pressure depth of 200 feet, the mixture could be as lean as 3 percent oxygen (0.21 atm) or as rich as 17 percent oxygen (1.2 atm) without encountering any short-term physiological limits. Likewise, for a given oxygen concentration in the breathing mixture, the chamber inhabitant can make excursions over a fairly wide depth range. A mixture containing 10 percent oxygen, for example, would permit operations between 36 and 360 feet, with the possibility of short excursions as deep as 600 feet.

CAUTION: It is important to note that dangerous anoxia can occur if lean mixtures, intended for deep operations, are breathed during ascent and decompression. It is necessary to provide higher oxygen concentrations at shallower depths to stay within the working range indicated in Figure 6-1.

d. Diluent Gasses. The oxygen percentages shown in Figure 6-1 are applicable with any diluent gas or mixture of diluent gasses. Oxygen-nitrogen mixtures, including air, can be used freely if the nitrogen partial pressure is limited to 3 atm, the pressure at which the first symptoms of nitrogen narcosis appear. However, nitrogen partial pressures to 5.5 atm can be used with care by experienced divers for short periods (see Reference (3), U.S. Navy Diving Manual). (This is equivalent to diving at 200 feet with air.) For depth greater than 200 feet, helium is the diluent gas now generally used because it is nontoxic at any practical depth and because its low density reduces breathing effort. When helium is used, it introduces two serious problems which must be solved: Occupant body heat loss due to extremely high heat transfer coefficient of helium and occupant high-pitched speech due to the sonic velocity of helium. The primary body heat loss problem can be solved by raising the chamber temperature under pressure at least 15 deg. F above normal for diver comfort. Because the occupant cannot be returned to normal pressure and temperature immediately, the PV must have a good heating system with precise temperature control and at least one backup heat source to keep the occupant warm for a mission of many days. The high-pitched speech problem can be eliminated by the use of the helium speech unscrambler for communications.

e. Contaminants. Various constituents of compressed gasses can have detrimental effects on the health of the diver. Some of these contaminants and their effects are discussed in the following paragraphs.

(1) Carbon dioxide can be a major contaminant in a breathing-gas system being supplied by a compressor because of its existence in the air being compressed, or because of improper function of the compressor. A significant amount of carbon dioxide is also produced by chamber inhabitants. Respiration accounts for the largest part of CO_2 production. The amount varies between 0.15 and 0.40 pounds/man/hour, depending upon the level of physical activity. The normal concentration of CO_2 in expired air is 3.75 percent. The physiological reaction to carbon dioxide at atmospheric pressure as a function of its partial pressure is shown in Figure 6-2. In order to remain below a given partial pressure, as the total pressure is increased, requires the attainment of lower and lower concentrations of carbon dioxide. Acceptable limits of carbon dioxide concentrations as a function of exposure period and depth are shown in Figure 6-3. Because the physiological effects of concentration as a function of pressure have not been investigated in as much detail for carbon dioxide as for oxygen, the effect of depth has been estimated as shown in Figure 6-3. (See Reference (4), Roth, Space-Cabin Atmospheres; Part IV -- Engineering Trade-Offs of One-Versus Two-Gas Systems.) This estimation is based on reported values (see Reference (5), Elkins, The Chemistry of Industrial Toxicology and Reference (6), Williams, Some Effects of Water Vapor and System Pressure on Dynamic Reaction to CO_2 with Solid Absorbents) and on the effect of oxygen concentration as shown in Figure 6-1. For exposure periods shorter than one hour, carbon dioxide partial pressure of 0.5 percent produces only mild toxic effects, and serious discomfort may result at 2.0 percent.

(2) Carbon monoxide is sometimes available as a contaminant of a breathing-gas system being supplied by a compressor. It exists in the air being compressed and it is a byproduct of an improper functioning compressor. A small amount of carbon monoxide is also produced by the diver (10 cc per day at 1 atm) (see Reference (7), Gannoe, Final Report on Gas Monitoring Equipment Investigation). The toxic effect of carbon monoxide is due primarily to its affinity for hemoglobin, the oxygen carrier of the blood. If 500 ppm of carbon monoxide is inhaled at atmospheric pressure until equilibrium is approached, 50 percent of the hemoglobin in the body will be combined with carbon monoxide. This will result in slight confusion and possible fainting or collapse upon exertion. Asphyxiation by carbon monoxide to the extent of unconsciousness, if not prolonged, usually has no significant after effects. Prolonged anoxemia, however, may result in permanent damage to the brain. Exposure to concentrations greater than 1200 ppm can be fatal. Figure 6-4 shows limits for carbon monoxide extrapolated to a depth of 1000 feet. These curves do not consider the partial pressure of oxygen in compressed-air exposures which would allow the carbon monoxide content to be greater than shown here. Work by the Navy Toxicology Unit has shown that with a constant partial pressure of oxygen the acute toxicity of carbon monoxide is a linear function of its partial pressure (see Reference (8), Wands, Some Recommended Standards for Compressed Air for Breathing).

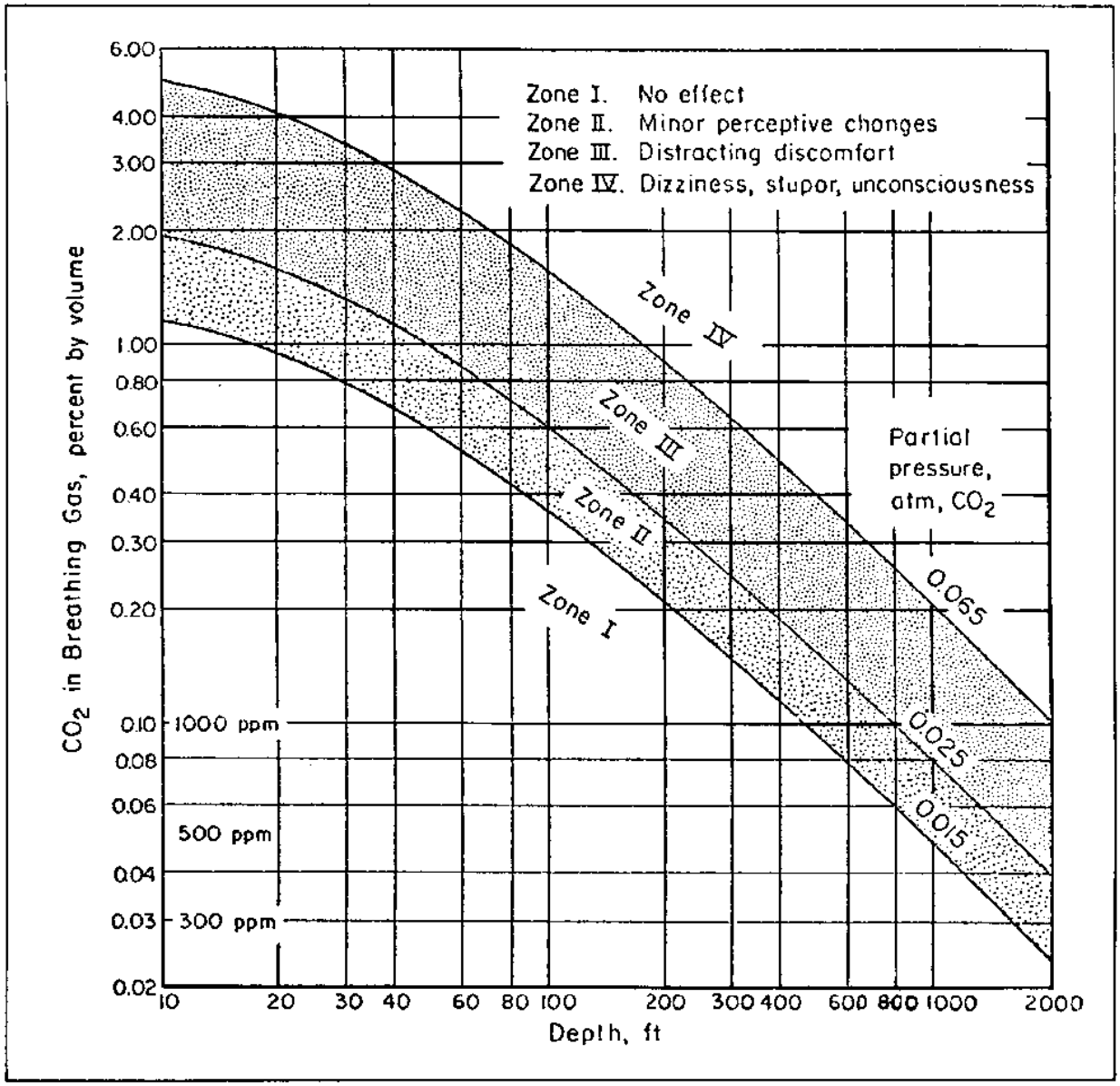

FIGURE 6-2
Limiting Percent of CO_2 in Breathing-Gas Mixture as a Function of Depth and CO_2 Partial Pressure (1)

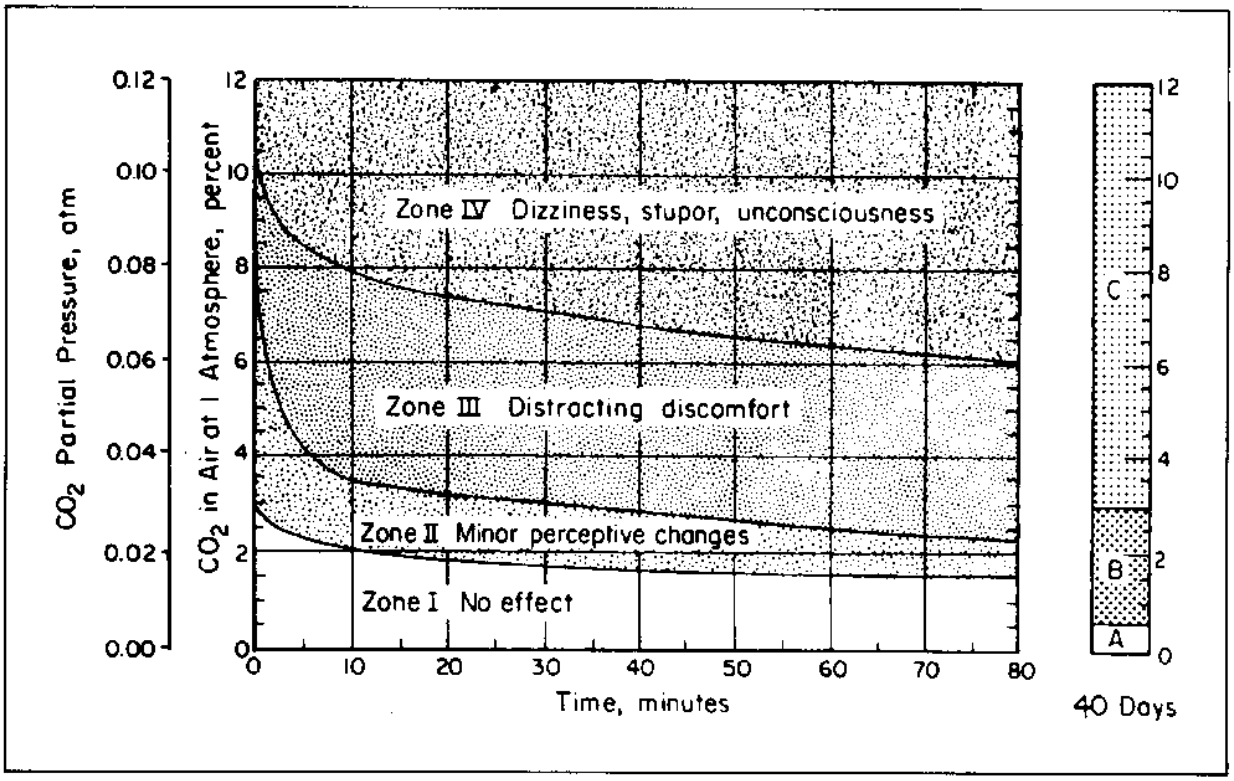

FIGURE 6-3

Relation of Physiological Effects to Carbon Dioxide Concentration and Exposure Period (4)

(3) Water Vapor. The respiratory system can tolerate a wide variation in the amount of water vapor contained in the air. Experience has shown that the relative humidity in breathing gas should be at least 30 percent to prevent lung irritation. A relative humidity of over 90 percent can be tolerated but condensation becomes a problem with equipment operation. In general, the relative humidity of breathing gas should be between 50 and 70 percent.

(4) Hydrocarbons represent some of the most significant classes of contaminants which may be present in a sealed environment.

(a) Sources. Sources of troublesome hydrocarbon contaminants include (1) organic solvents in the form of paints, paint thinners, alcohols, degreasing and dry cleaning agents, adhesives, metal cleaners, etc.; (2) lubricating and fuel oils; (3) certain normally nonvolatile plastics (vinyls and Teflon for instance) which, if subjected to high temperatures, will exude toxic fumes; and (4) chamber inhabitants. Strict attention shall be paid to not only what is used in the chamber but also what is locked in during pressurization.

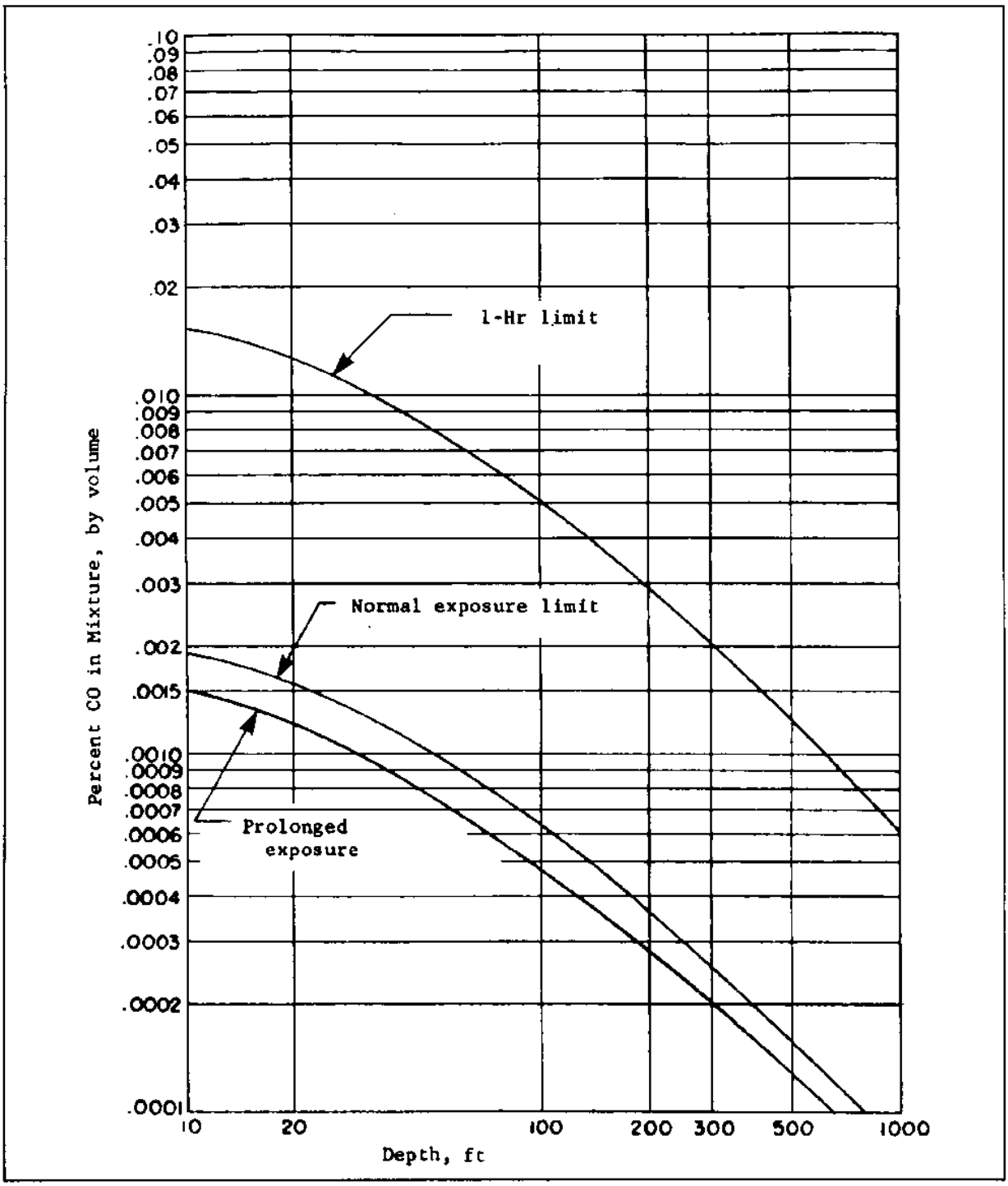

FIGURE 6-4

Limiting Percent CO in Breathing Mixture as a Function of Depth and CO Partial Pressure (7)

(b) Health hazards. The organic solvents, especially the halogenated varieties, are all hazardous to health in some degree. High concentration of the vapor may cause the sudden onset of dizziness, headache, nausea, vomiting, and central nervous system depression leading to unconsciousness and death; lesser concentrations may also cause serious illness. Symptoms do not generally appear until after considerable damage has been done to vital organs such as the liver, kidneys, and bone marrow. The toxicological properties of hydrocarbons vary. The volatile liquid hydrocarbons are somewhat narcotic, and the higher molecular-weight members are irritating. Certain of the aromatic group have carcinogenic (cancer-producing) properties, and a few of the other high-molecular-weight compounds are poisonous. Benzene is the most dangerous of the common hydrocarbons because it has a cumulative effect that can be fatal.

(c) Fire hazard. The presence of hydrocarbons in the chamber, especially in high O_2 atmospheres, presents a serious fire hazard.

(d) Limits. Figure 6-5 shows two limits for total hydrocarbons in a breathing-gas system as a function of depth. These curves have been estimated on the basis that the allowable concentration of hydrocarbons during an extended dive at 1000 feet is 5 percent of that allowed at atmospheric pressure (see Reference (7)). The slope of the curve for short-duration dives is the same as that for extended dives.

(5) Oxides of nitrogen are possible trace contaminants of breathing-gas systems. They are produced by the high-temperature combustion of oil or gasoline, and they can be contained in air being compressed for a breathing-gas system. Nitrogen dioxide (NO_2) is considerably more toxic than nitric oxide (NO), acting as an acutely irritating substance. In equal concentrations, it is more injurious than carbon monoxide. Figure 6-6 shows two limits of concentration for nitrogen dioxide as a function of depth. The limit at the surface is from federal specification BB-A-1034. These curves were based on the assumption that the allowable concentration of nitric oxide or nitrogen dioxide during an extended dive at a 100-foot depth is 5 percent of that allowed at atmospheric pressure. The slope of the curve for the short-duration dive is the same as that of the extended dive.

(6) Sulfur dioxide is probably the most widespread of the man-made air pollutants, and it is often contained in the air being compressed for a breathing-gas system. Concentrations in excess of 10 ppm are definitely irritating. Figure 6-7 shows two limits of sulfur dioxide for breathing-gas systems as a function of depth. The curves are estimated on the basis that the allowable concentration of sulfur dioxide during an extended dive at a 1000-foot depth is 5 percent of that allowed at atmospheric pressure. The slope of the curve for the short-duration dive is the same as that of the extended dive.

3. BREATHING GAS CONSUMPTION REQUIREMENTS. In a chamber atmosphere human breathing gas requirements are based on oxygen that is consumed in respiration. The diluent gas (nitrogen and/or helium) is not consumed or altered.

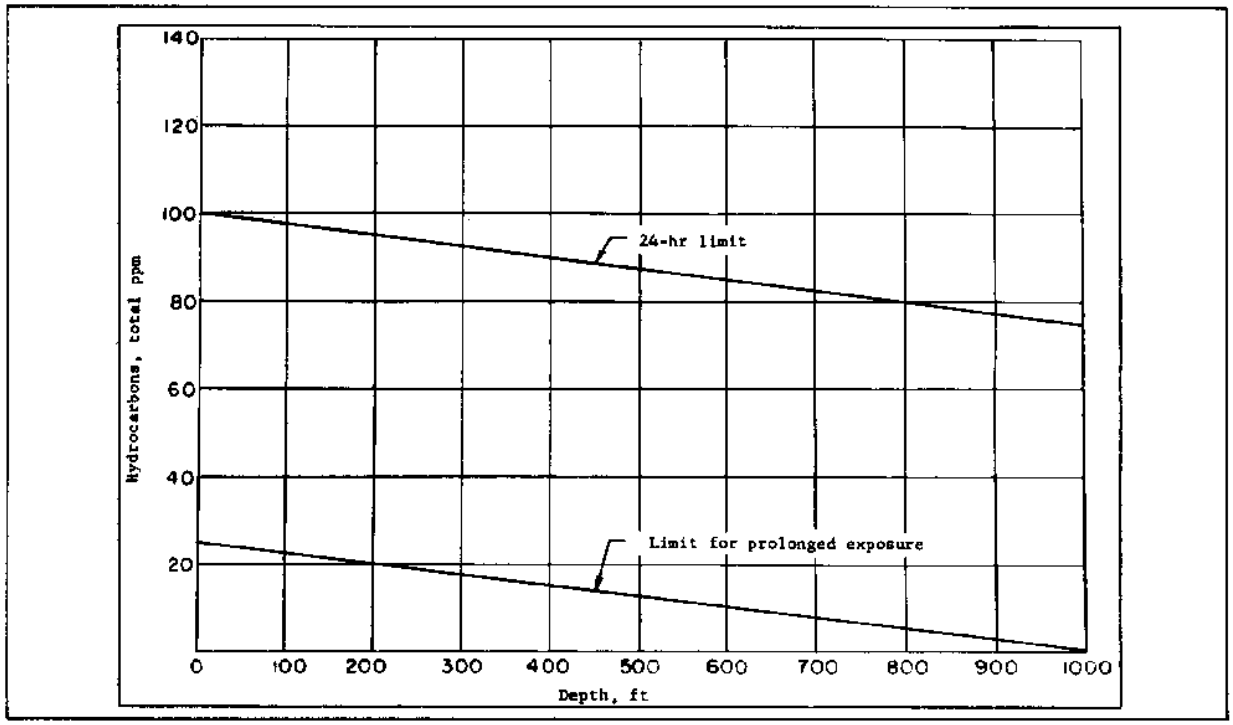

FIGURE 6-5

Total Hydrocarbons Allowed Vs. Dive Depth (7)

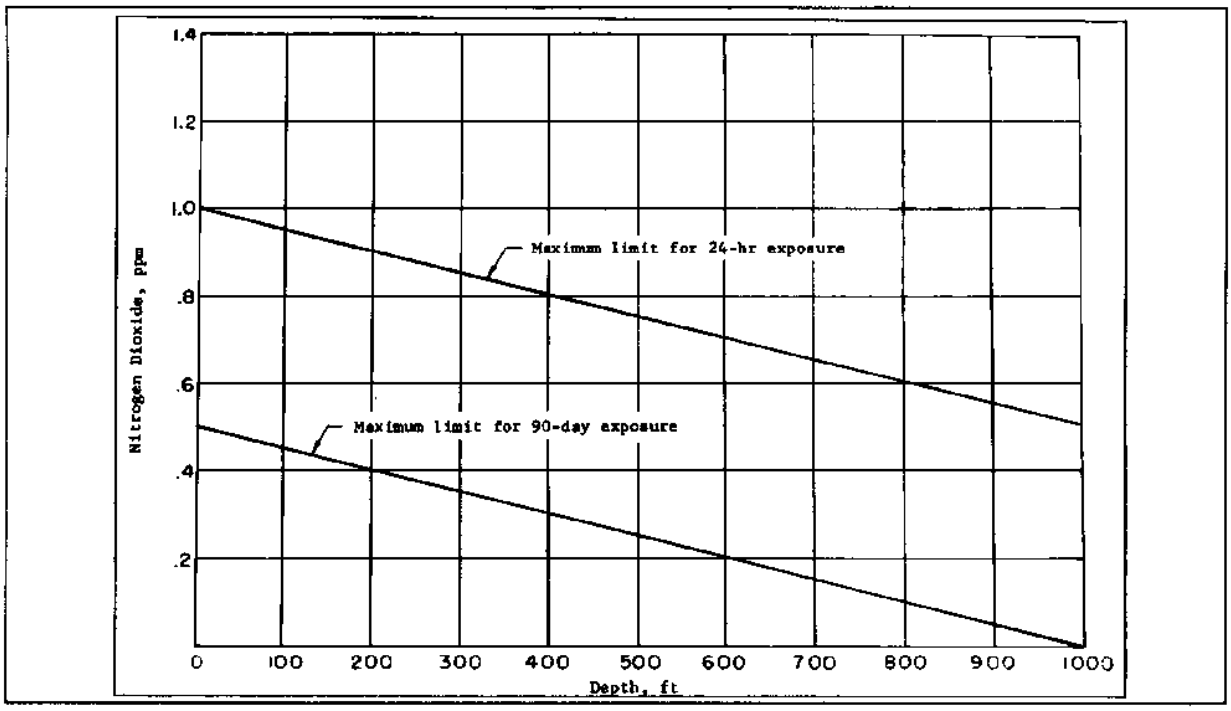

FIGURE 6-6

Allowable Nitrogen Dioxide Vs. Dive Depth (7)

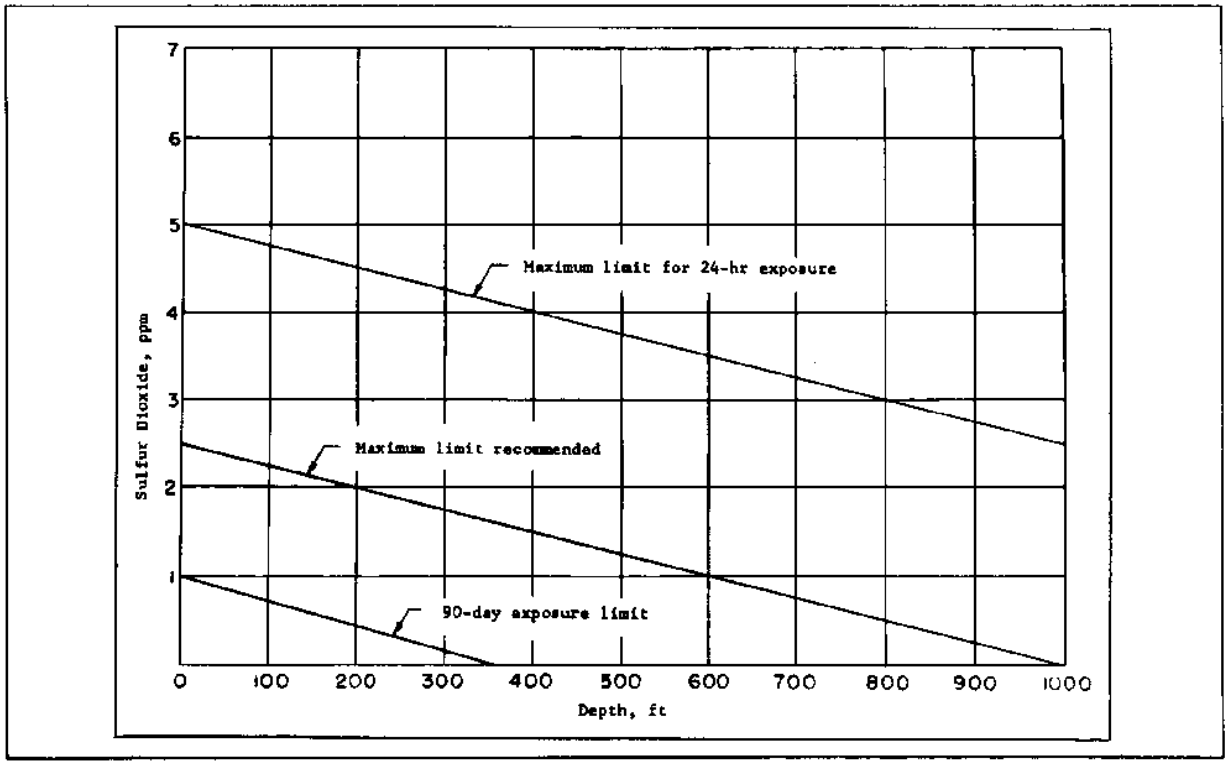

FIGURE 6-7
Allowable Sulfur Dioxide Vs. Dive Depth (7)

NOTE: If a built-in breathing (BIB) system is employed, high concentration of oxygen, or pure oxygen, is breathed and the exhaled gas must be vented outside the chamber.

Chamber supply gas requirements are a function of both breathing gas requirements and supply system design, and are discussed in Sections 2 and 3. Figure 6-8 relates oxygen consumption and respiratory volume to rate of exertion. The data for Figure 6-8 are based on experimental measurements and provide a basis for the selection of breathing-gas quantities. The mass rate of oxygen consumption and corresponding carbon dioxide production varies with the rate of exertion and is independent of depth. As indicated in Figure 6-8, values of oxygen consumption vary from about 0.5 standard liters per minute (slm) when at rest to about 4.0 slm with heavy exertion. These values are equivalent to 0.0895 and 0.716 pound of oxygen per hour, or 1.14 and 9.13 standard cubic feet (scf) per hour. The actual volume of oxygen consumed at depth would decrease in inverse proportion to absolute pressure in accordance with gas laws. The values for respiratory minute volume (RMV) shown in Figure 6-8 are determined by carbon dioxide ventilation requirements within the body, and these volumes are the same at diving depths. Thus, the mass flow of gas to meet respiratory ventilation requirements increases in direct proportion with depth and with oxygen consumption. (See Reference (9), Riegel, Design of Breathing Apparatus for Diving to Great Depths.)

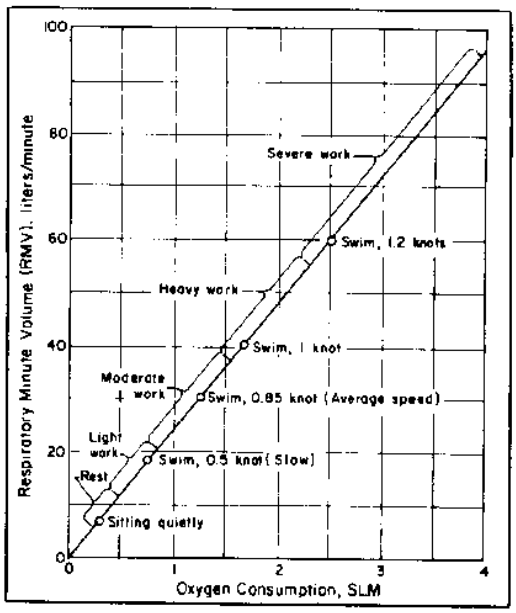

FIGURE 6-8
Relation of Respiratory Volume and Oxygen Consumption to Type and Level of Exertion (9)

4. TEMPERATURE-HUMIDITY REQUIREMENTS. Experimental data relating comfort to temperature and humidity for hyperbaric conditions is very scarce. However, guidelines can be established from past chamber experience.

a. Temperature. Chamber temperatures in the range of 70 to 80 deg. F are required for air missions to 200 feet, however, helium-oxygen missions require higher-than-normal temperatures to keep occupants comfortable. Chamber temperatures in the range of 85 to 95 deg. F are required at the 400 to 2000-foot depths. Helium heat transfer properties and increased density are responsible for greater quantities of heat being convected away from the body. Lower pressures and gas mixes more closely resembling air dictate progressively lower gas temperatures for comfortable body temperature maintenance.

NOTE: The designer should note that the comfort range for helium dives is very narrow. Adequate control equipment must be provided.

b. Humidity. Experience has shown humidity requirements to be the same for hyperbaric atmospheres as for normal atmospheres. In general, the humidity should not be under 30 percent and normally controlled between 50 and 70 percent.

5. PRESSURIZATION/DEPRESSURIZATION. The limiting pressurization/ depressurization rates must be known and provision for adherence to these limits designed into the chamber systems.

a. Pressurization. The pressurization rate for hyperbaric chambers will vary from a few feet per minute to the higher rates required for submarine escape training. Design pressurization rates for chambers intended for treatment of decompression sickness should be 100 feet per minute from 0 to 165 feet seawater pressure.

b. Depressurization. Design depressurization rates should be in accordance with the diving decompression schedules listed in the U.S. Navy Diving Manual (Reference (3)). Normally, the capability for very slow depressurization is required, 4 feet per hour being a typical rate. The control system design should incorporate automatic mode to relieve the chamber operator at the slow rates.

Section 2. AIR SYSTEMS

1. COMPRESSED AIR SYSTEMS. Compressed air systems are used mainly in recompression chambers, experimental air diving, and air saturation diving hyperbaric complexes. This section discusses the basic elements of an air system as shown schematically in Figure 6-9.

2. INTAKE AIR FILTER. Regardless of how clean the atmospheric air is at the point of compressor suction, the air must be filtered to prevent contamination and unnecessary wear in the compressor. Under local contamination, such as exhaust of an internal combustion engine near the suction filter, the compressor or the engine must be shut down. In cases where an emergency diesel generator is installed in the facility, an electrical interlock which will shut down the compressor when the generator starts is desirable.

Air intakes should be located in the open, well above ground level and sited as far as possible from equipment which emit impurities. Hoods, screens, and/or filters should be used to protect the intake from rain, hail, and other wind-borne debris.

Compressor manufacturers will supply requirements for pressure drop through intake piping and filtering. The manufacturer will also provide the maximum length and size of intake piping recommended so as not to damage the compressor. If this information is not supplied by the manufacturer, it is recommended that the pressure drop not exceed 3 inches of water. A dry type intake filter is recommended over all other types, an oil bath type is prohibited.

3. COMPRESSOR. The air compressor should have the required output flow capacity and discharge pressure of compressed air at an acceptable air purity with good reliability and low maintenance.

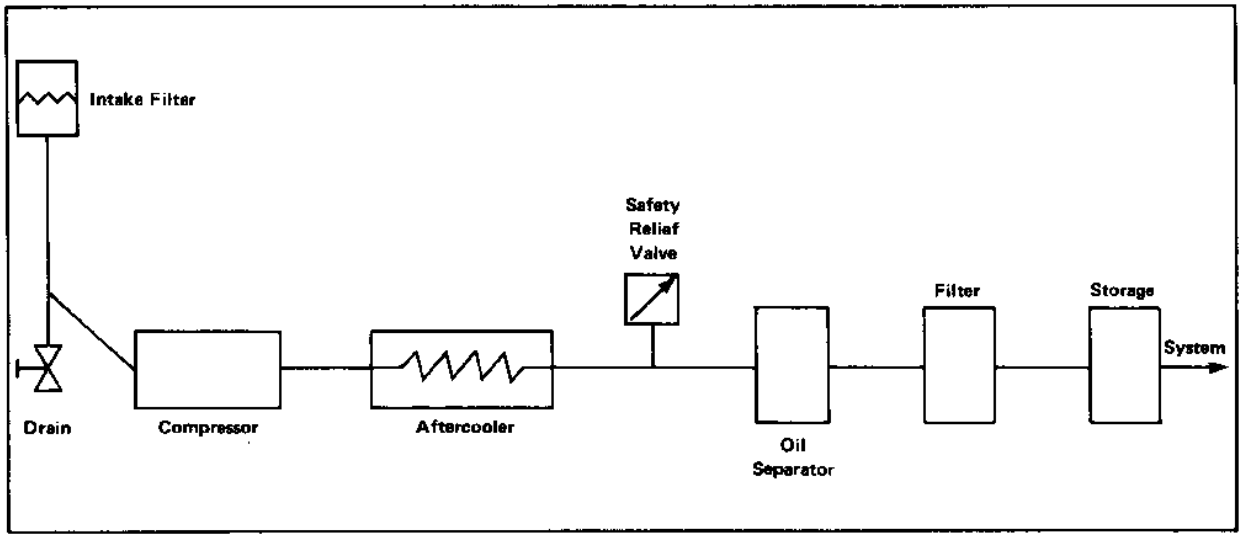

FIGURE 6-9
Compressed Air System

a. Capacity. Output flow capacity should be large enough to support the operating requirements of the facility. If the compressor supports a recompression chamber, the capacity should be equal to or greater than the compressed air or ventilation requirement unless there is a large storage capacity. If the compressor is to support a saturation complex, the capacity should be large enough to replenish the storage capacity within a moderate time frame in the event of an emergency requirement.

b. Pressure. Discharge pressure of the compressor should not exceed the working pressure of the piping system or storage flasks.

c. Purity. Air purity of compressor discharge should be as clean as possible for breathing media.

d. Reliability. Completely reliable and low maintenance compressors are available in several types. The most common and most preferred is the reciprocating type compressor. When an oil-lubricated compressor is selected, it is possible to meet the breathing gas standards through the use of oil separators and special filtration equipment.

4. OIL FILTER AND SEPARATOR. The most effective oil filtration and separator system for an oil-lubricated compressor is the coalescing filter element.

5. STORAGE FLASKS. The flasks designed to store compressed air must meet specific requirements more stringent than that for other breathing gasses. Consideration must be made for the moisture content and extracting the water. The size of the flask and the desired storage pressure must also be primary. The bottles should be stored so that a drain valve is in the lowest position. If the flask is to be mounted to stand upright, a drain valve must be located in the lower point. If the bottle's valving is located at the lowest point, then a valve must be installed as part of the piping as shown in Figure 6-10.

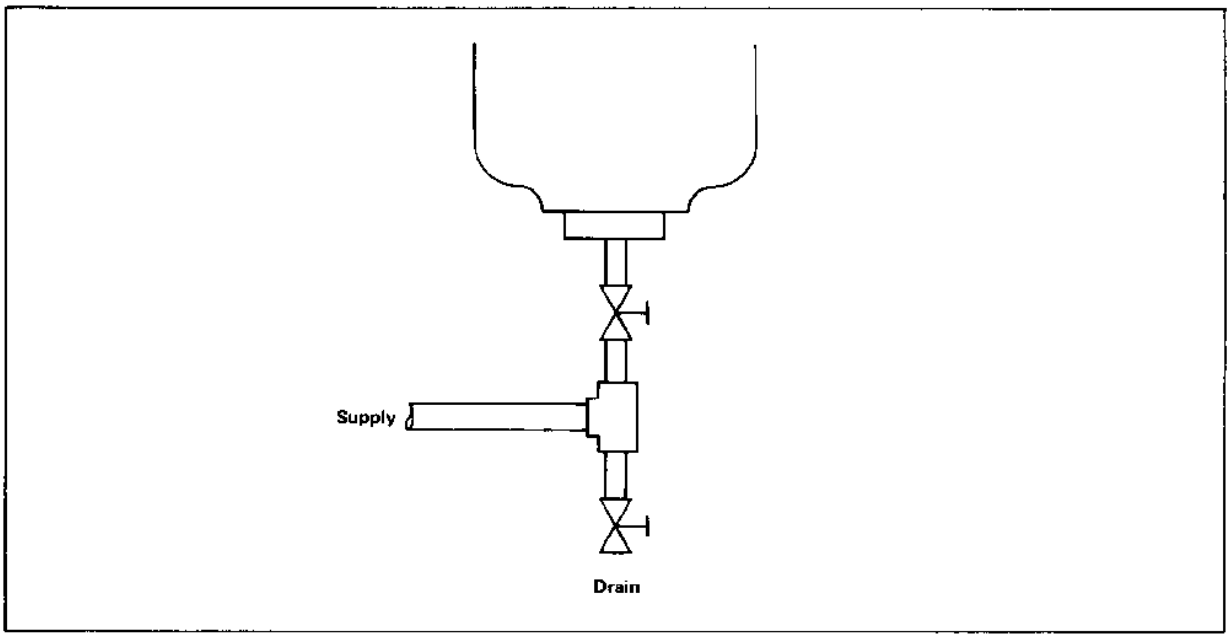

FIGURE 6-10
Vertical Storage Flask Drain

If the flask is to be mounted on the horizontal plane and the storage flask is equipped with a drain valve in the flask, the flask must be tipped downward at an angle so that the drain valve is at the lowest point as shown in Figure 6-11. Normally the valve is located at least 6 inches below the furthest low spot in the flask.

If the bottle is not equipped with a drain valve, provision may be to add the valve or install a low-point suction line as shown in Figure 6-12.

6. PREVENTION OF LINE FREEZE. In geographical locations where freezing winter conditions prevail, provision must be included to prevent air line freezing. Air line freezing occurs when the dew-point of the air is above the ambient temperature. During operations when air is used from storage, the pipes will collect condensate causing the outside of the pipe valves and regulators to accumulate a layer of ice. Pipes should be insulated or protected against the elements and wherever possible valves and regulators should be mounted inside the building.

7. ADDITIONAL INFORMATION ON COMPRESSORS AND COMPRESSED AIR DISTRIBUTION SYSTEMS. For additional information on compressors and compressed air distribution systems, refer to NAVFAC DM-3, Mechanical Engineering Design Manual (see Reference (10)).

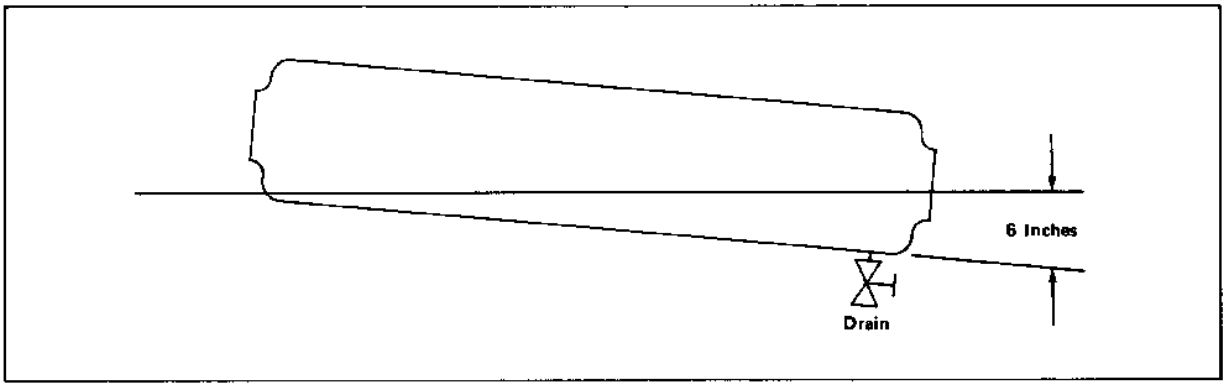

FIGURE 6-11
Horizontal Storage Flask

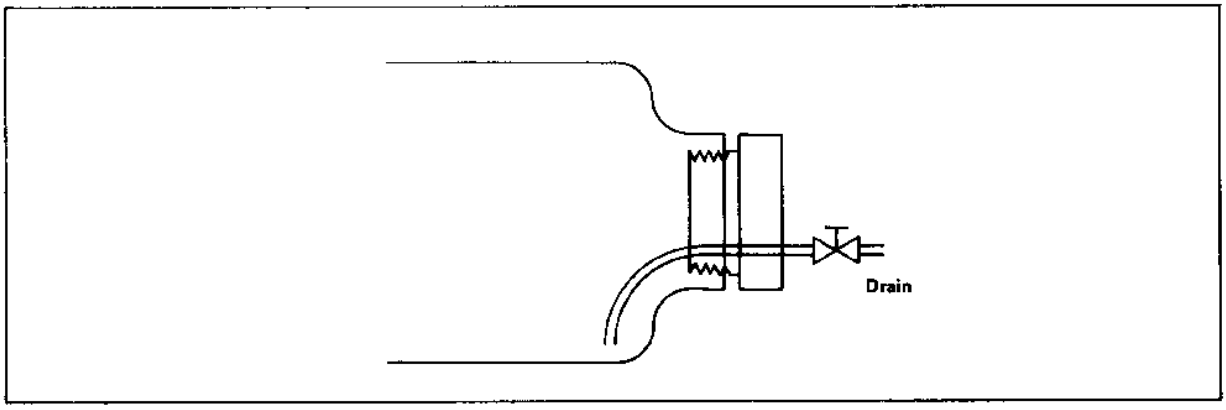

FIGURE 6-12
Horizontal Flask Drain

Section 3. GAS SYSTEMS

1. MIXED GAS BREATHING SYSTEMS. The correct gas mixture of helium, oxygen, and nitrogen for missions under high pressure (greater than 300 feet) is supplied to the PV by the gas system. The basic elements of the gas system are shown in Figure 6-13.

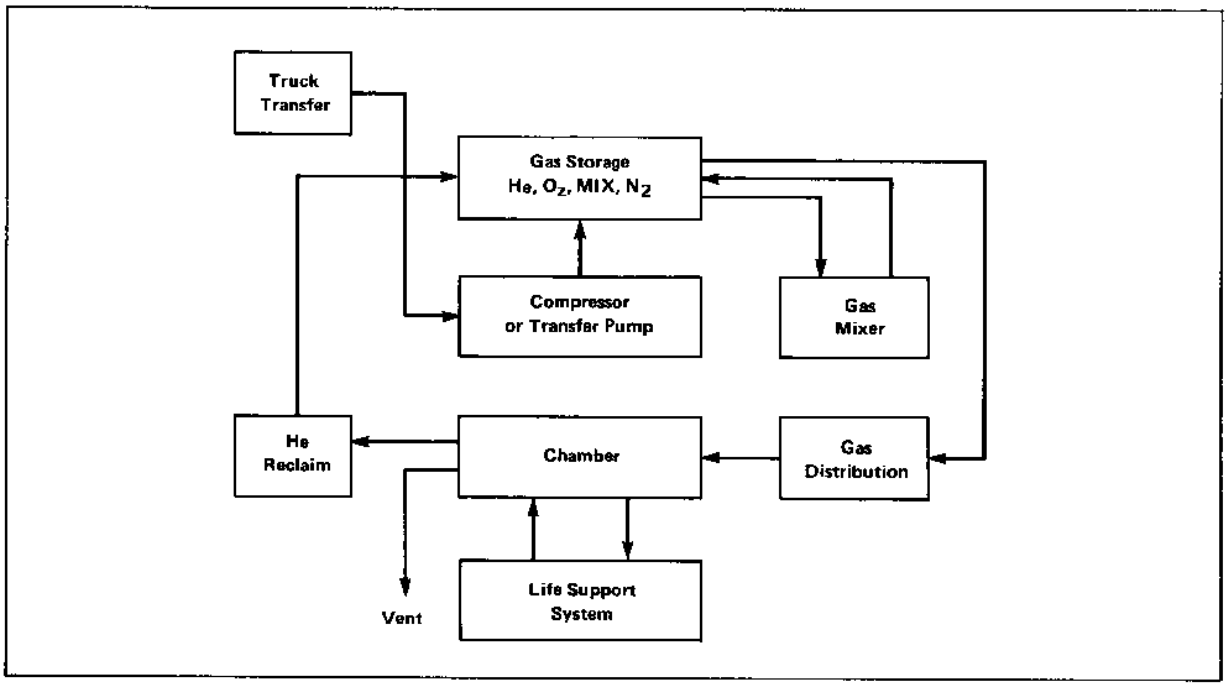

FIGURE 6-13
Typical Gas System

2. TRUCK TRANSFER. Delivery of the large volumes of pure helium, oxygen, and nitrogen required for saturation diving are made by truck trailers. The hyperbaric facility design should provide easy access for the trailer to the transfer position. A truck trailer drive-through road or access at the transfer position is desirable. Transfer of gas by the equalizing method followed by the pumping method through a compressor or pump is shown in Figure 6-14.

3. GAS STORAGE. Three gasses are usually stored for mixed-gas dives: oxygen, helium, and heliox mixture. Storage volumes are determined by depth, chamber mission time (descent time, bottom time, and decompression time), breathing gas composition requirements, and number of divers. In addition, there must always be available an adequate back-up storage of all gas for both breathing and pressurization to complete the decompression schedule from maximum chamber pressure, including sufficient gas for possible stages of repressurization or recompression.

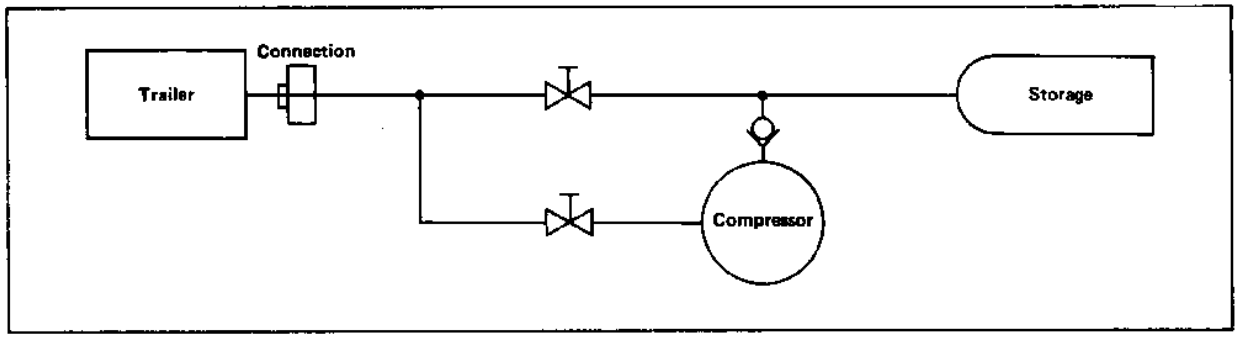

FIGURE 6-14
Gas Transfer to Storage

In making gas storage volume calculations it must be recognized that the storage volume will not flow gas to the chamber when at equilibrium pressure with the chamber unless provisions are included to transfer the gas. In Part 2 of the U.S. Navy Diving-Gas Manual (Reference (1)), tables of gas properties are presented for convenient use in the design of diving systems. These tables show how gasses such as helium, oxygen, and air deviate from the ideal gas laws. The pressure range covered is 0 to 1500 feet of seawater for chamber calculations, and 500 to 5000 psi for gas storage calculations. The temperature range covered is 30 deg. F to 130 deg. F. Properties of 5 pure gasses and of 25 mixtures of heliox are tabulated.

Required storage volume will dictate the size and number of storage flasks required. Flask shape and volume for the various sizes used by the U.S. Navy is included in military specification MIL-F-22606.

4. GAS MIXING. When gasses, other than air, are used for breathing at depth, a method of accurately mixing the various gasses must be devised. Commercial mix rig systems are available which utilize a continuous flow mixing process. This method has proved most accurate, repeatable and a producer of a large quantity of gas in a short period. Figure 6-15 shows how the pure gasses flow at normal storage pressures (1100 psi or greater) to the input regulator (1), the gas is then heated to a specified and controlled temperature in heaters (2), so that the flow metering valves (3) always measure gas at the same pressure and temperature. This eliminates the need for computing temperature and pressure corrections. After passing through the metering valves, the three gas streams are mixed in a turbulent mixing chamber (4), then passed through a regulator (5) that controls the flowmeter-outlet pressure at 950 psi. A sample of the mixed gas is withdrawn through line (6) and passed through a gas analyzer. The main gas stream passes through regulator (7), where its pressure is regulated at the value needed to supply the diver. An accumulator (9) provides for mixed-gas storage. With the above pressure levels, the rate of flow of the mixture is 160 scfm, equivalent to 6 cfm at depth for a depth of 850 feet. The mixer output may be used to supply the PV directly or may be routed through a compressor to storage.

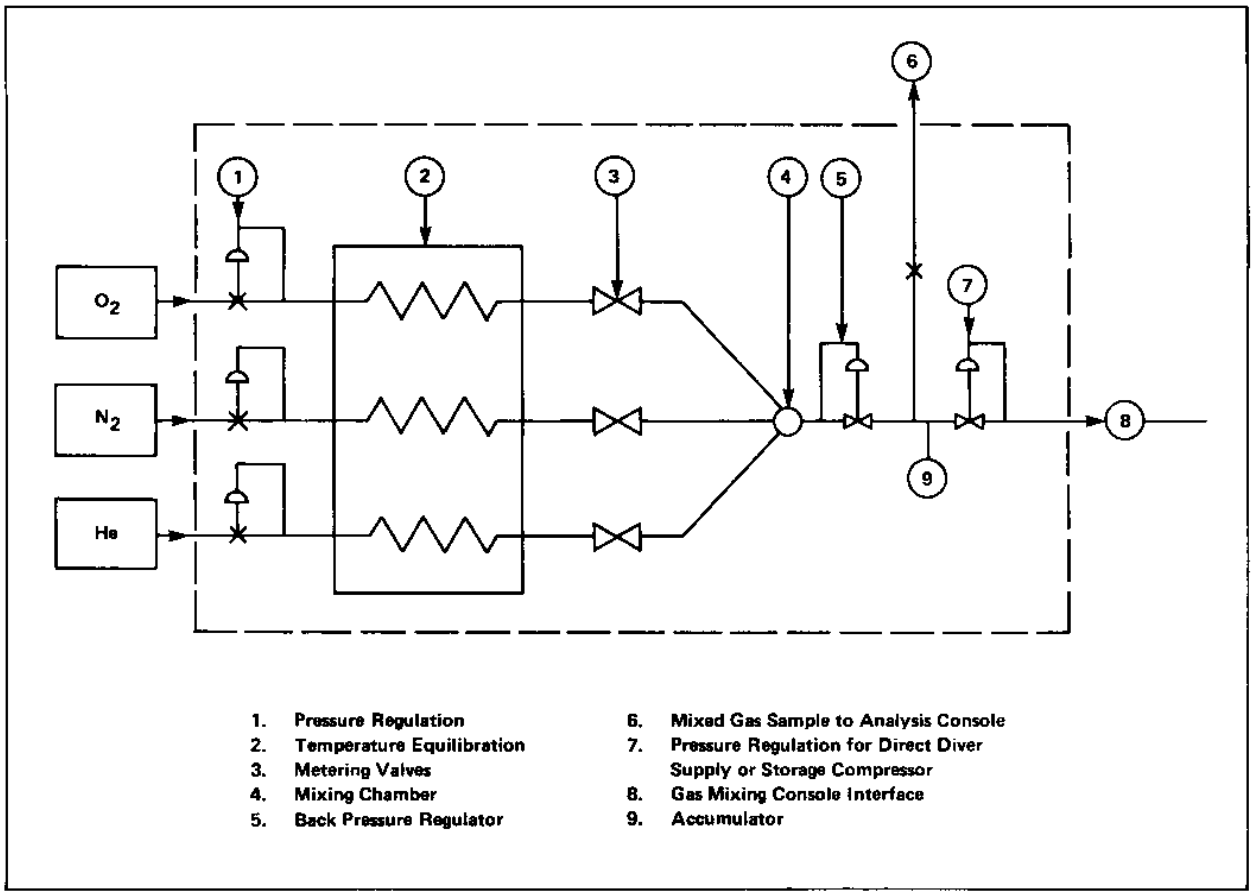

FIGURE 6-15
Schematic Arrangement of Airco Mixmaker® Mixing System (1)

5. CARBON DIOXIDE CONTROL. After the gasses are supplied to the chamber, the task is then to maintain the gas in a clean breathable state. This is the function of the life support system. The life support of a saturation system consists of removing the carbon dioxide, odors, and dust from the gas and cooling to dehumidify, and heating the gas. As shown in Figure 6-16, gas is drawn from the chamber through a double hull stop valve, then through a blower to the carbon dioxide scrubber. After the scrubber, the gas is dehumidified by cooling then reheated to the desired temperature. A Purifil filter following the carbon dioxide scrubber is included to remove body odors. A filter element on top of the Purifil filter made of Armalon will remove all dust particles.

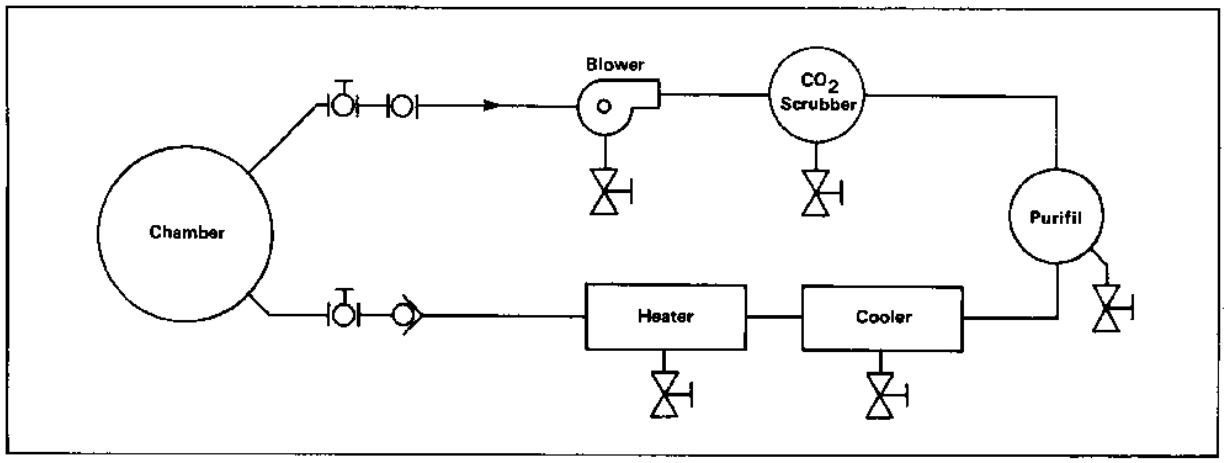

FIGURE 6-16
Carbon Dioxide Control

a. CO_2 Absorbent. The weight of absorbent required is determined by the weight of carbon dioxide to be absorbed and the efficiency of absorbent use. Carbon dioxide weight is determined by the number of divers served, the carbon dioxide production rate per diver, and the operating period. Efficiency of absorbent use is determined by canister design and operating conditions; high efficiency requires good distribution of gas flow through the bed, humidity above 70 percent, temperature above 60 deg. F, and freedom from moisture condensation in the bed. Figure 6-17 summarizes the characteristics of Baralyme, lithium hydroxide, and Sodasorb, three commercial carbon dioxide absorbents. Baralyme can be used if there is a potential moisture problem because it is not caustic if wetted. Sodasorb can be used for hyperbaric chambers in which moisture is not a problem.

b. Quantity of CO_2. The weight of carbon dioxide generated depends upon the rate of oxygen consumption, which varies with the rate of effort as shown in Figure 6-8, and with the respiratory quotient, which is the ratio of carbon dioxide produced to oxygen consumed. At moderate depths, the maximum rate of oxygen consumption is about 3 slm; at very great depths this decreases to 2 slm because of increased breathing resistance. The respiratory quotient varies from 0.7 to 1.1, averaging 0.9. Thus, the maximum rate of carbon dioxide production for 3 slm oxygen consumption and 0.9 respiratory quotient, is 2.7 slm, equivalent to 0.71 pounds/hour.

c. Effect of Temperature. The rate at which carbon dioxide is absorbed is considerably lower at 40 deg. F than at 70 deg. F. In some scrubbers sized for adequate performance at 70 deg. F, absorbing capacity at 40 deg. F may be as little as 1/3 that at 70 deg. F.

d. Absorbent Bed Configuration. A variety of absorbent-bed configurations are in use, and none seem to have advantages that make them universally applicable. The principle design requirements are to provide an adequate amount of absorbent, uniform distribution of gas flow through the absorbent bed, and sufficient time for the absorption reactions to occur.

Characteristic	Absorbent		
	Baralyme	Lithium hydroxide	Sodasorb
Absorbent density, lb/ft^3	65.4	28.0	55.4
Theoretical CO_2 absorption, lb CO_2/lb	0.39	0.92	0.49
Theor. water generated, lb/lb CO_2	0.41	0.41	0.41
Theor. heat of absorption, Btu/lb CO_2	670[b]	875[b]	670[a]
Useful CO_2 absorption, lb CO_2/lb (based on 50 percent efficiency)	0.195	0.46	0.245
Absorbent weight, lb per diver hr (0.71 lb CO_2)	3.65	1.55	2.90
Absorbent volume, ft^3 per diver hour	0.0558	0.0552	0.0533
Relative cost, $/diver hr (1968)	$1.75	$6.20	$0.75

a. Based on generating gaseous H_2O

b. Based on calcium hydroxide reaction only

FIGURE 6-17

Characteristics of Three Carbon Dioxide Absorbents (1)

(1) Sizing. The total weight of the absorbent can be selected on the basis of the total weight of carbon dioxide to be absorbed. The volume of a tightly-packed absorbent bed will then depend upon the absorbent density, Figure 6-18, and the residence time will be the same for any configuration of this volume. (Residence time is equal to absorbent bed volume divided by gas volume flow.)

If the bed volume is selected on the basis of absorbent weight, then the residence time of gas in the bed will be proportional to the operating period for which the scrubber is designed, and the rate of ventilation through the absorber. As a general rule, the volume flow rate required for CO_2 removal should be the same at all depths, matching respiratory volume characteristics.

(2) Pressure Drop. The pressure drop through an absorbent bed will depend upon the relation of flow cross section and bed depth for a fixed bed volume. A large cross section and small depth will result in low pressure drop. However, a uniform flow distribution over the cross section depends upon uniformity of pressure drop. This may be difficult to control if the bed is too thin or if the absorbent material is not packed properly in the canister. These difficulties can be minimized by using a perforated plate at the inlet of the bed to provide controlled pressure drop and flow distribution, and by establishing proper packing techniques. Figure 6-18 shows the relation of pressure drop to superficial velocity, pressure, and bed depth for air passing through a bed of 4 to 8 mesh Sodasorb or Baralyme pellets. The superficial velocity is defined as the calculated velocity for flow through the empty bed space. The data of Figure 6-18 are experimental data for air only and are taken in a flow regime of variable friction and momentum losses such that the data cannot be readily interpreted for helium-oxygen mixtures.

(3) Canister Design. Figure 6-19 shows two typical canister designs. Annular canisters are used with radial flow in either the inward or the outward direction. Cylindrical canisters usually contain annular baffles as shown to minimize by-passing of flow at the canister walls. The canister requires frequent servicing due to limited absorbent life. The cover should be of the quick-opening type, such as shown in Figure 3-23, and to facilitate removal and replacement of the absorbent, the designer should consider the use of cartridge-type replacement units. Servicing of the canister will be necessary also due to the corrosive effects of the absorbents. Careful selection of materials will reduce this tendency. However, the canister should be accessible for cleaning.

6. TEMPERATURE-HUMIDITY CONTROL. A typical temperature-humidity control as shown in Figure 6-20 includes the following elements:

a. Cooling coil.

b. Cooling coil control valve.

c. Cooling coil by-pass.

d. Water trap.

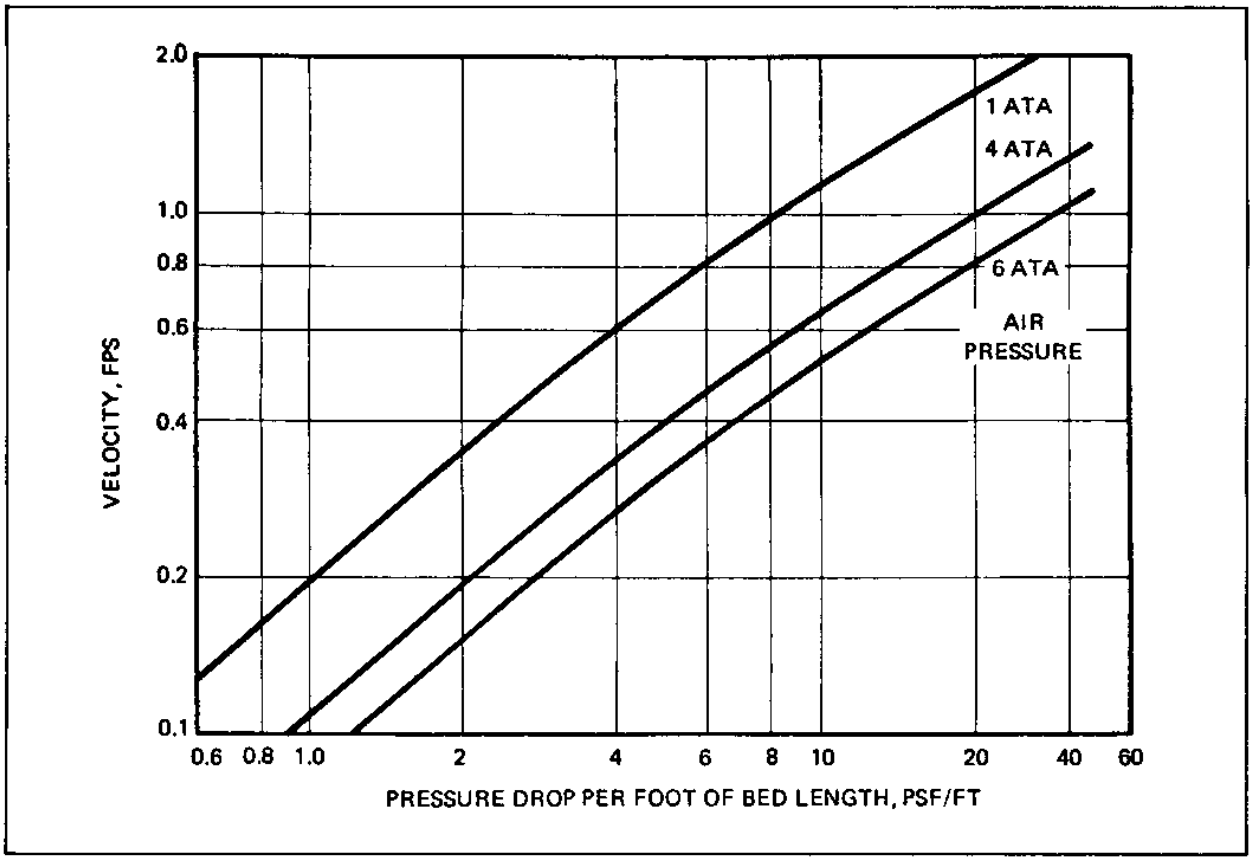

FIGURE 6-18
Relation of Pressure Drop to Superficial Velocity, Pressure, and Bed Depth for Air Passing Through a Bed of 4 to 8 Mesh Baralyme Pellets (1)

Pressure, and Bed Depth for Air Passing Through a Bed of 4 to 8 Mesh Baralyme Pellets (1)]

e. Heating coil.

f. Heating coil control valve.

Gas flowing into the control is cooled to remove the moisture, then reheated to an acceptable temperature. The cooling coil by-pass is used when the moisture content is low enough that further dehumidification would produce unacceptably low relative humidity.

Heating and cooling coils are sized by consideration of the worst case loads. The control valves on each coil and the by-pass on the cooling duct are used to adjust the system to less-than-worst case conditions. Heating coil capacity worst case is the high-pressure, high-helium atmosphere which requires higher chamber temperatures to maintain acceptable body heat loss of the inhabitants. Cooling coil capacity worst case may occur when the chamber is first closed and the moisture content of the atmosphere is high, when the chamber must be kept cold during a test, or when moisture must be removed at high chamber pressure. Cooling coil capacity will also determine the time

required to achieve an acceptable relative humidity.

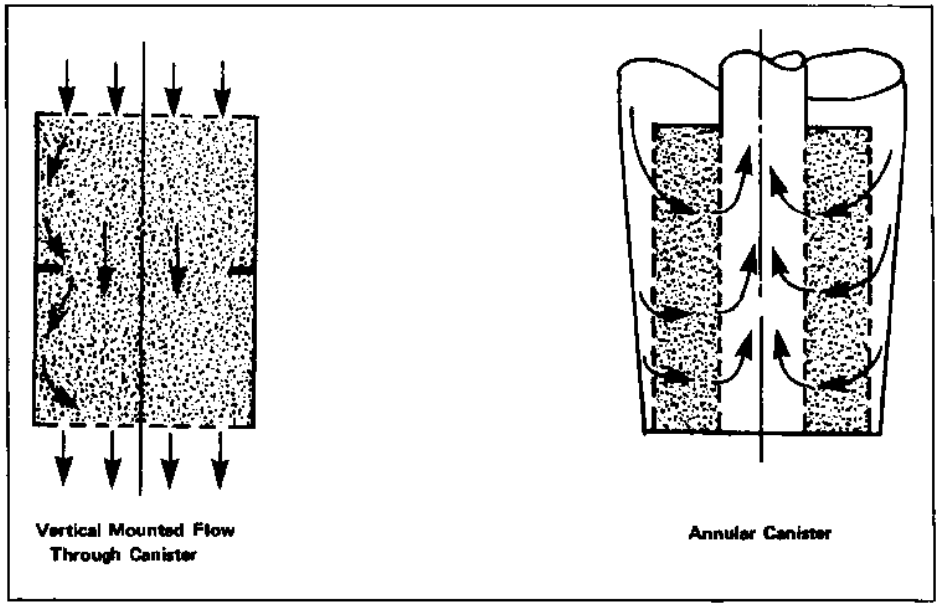

FIGURE 6-19
Typical Canister Configuration (1)

(1) Psychrometric Calculations. Standard psychrometric charts are commonly used in calculating the effects of heating and cooling moist air at atmospheric pressure. Such charts relate enthalpy changes to wet- and dry-bulb temperatures, relative humidity, dew point, and specific humidity, and permit graphical solutions of usual problems. These standard charts are set up for a single gas mixture (air) and for a single pressure (14.7 psia), and are not suitable for use with a range of gas compositions and pressures.

Figures 6-21 through 6-23 show three psychrometric charts developed for use at elevated pressures from 14.7 psia to 200 psia. Figure 6-22 covers the pressure range from 100 psia to 600 psia. Figure 6-23 provides temperature corrections for moisture enthalpy, to be applied to enthalpy data from Figures 6-21 and 6-22. Figures 6-21 and 6-22 are similar except for the vertical scale.

The mole has been used as the unit of gas quantity. A mole, as used in this discussion, is a quantity having a weight, in pounds, equal to the molecular weight of the dry gas. The volume of a mole of gas is the same for any gas of any molecular weight, at any specified temperature-pressure. Accordingly, the molar volume and the partial pressure of water vapor provide a means of determining the quantity of water per mole of gas, on which all other

psychrometric relations are based.

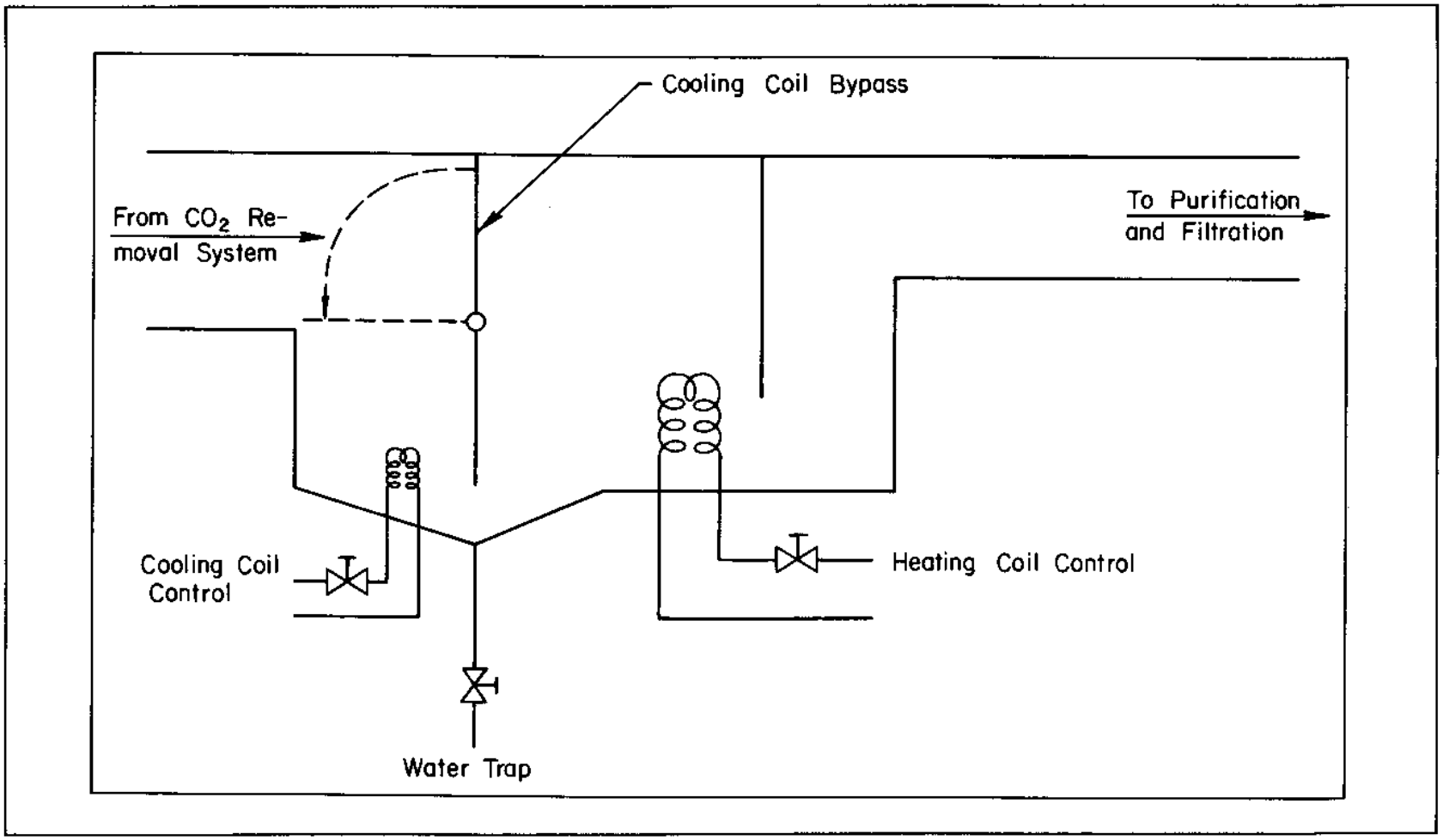

FIGURE 6-20
Temperature-Humidity Control

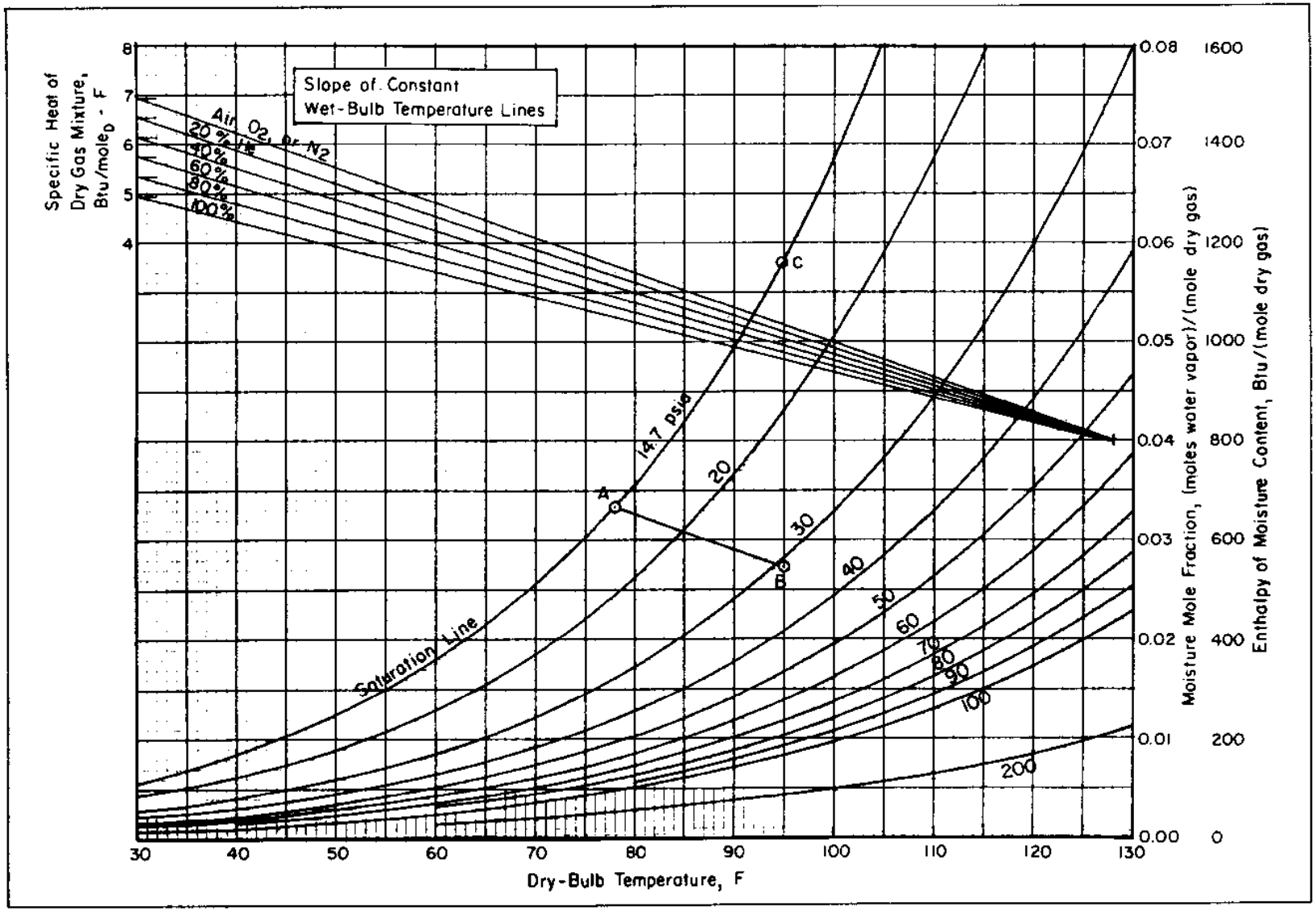

FIGURE 6-21

Psychrometric Chart 1 — Data for Gas Mixtures at Pressures From 14.7 Psia to 200 Psia (1)

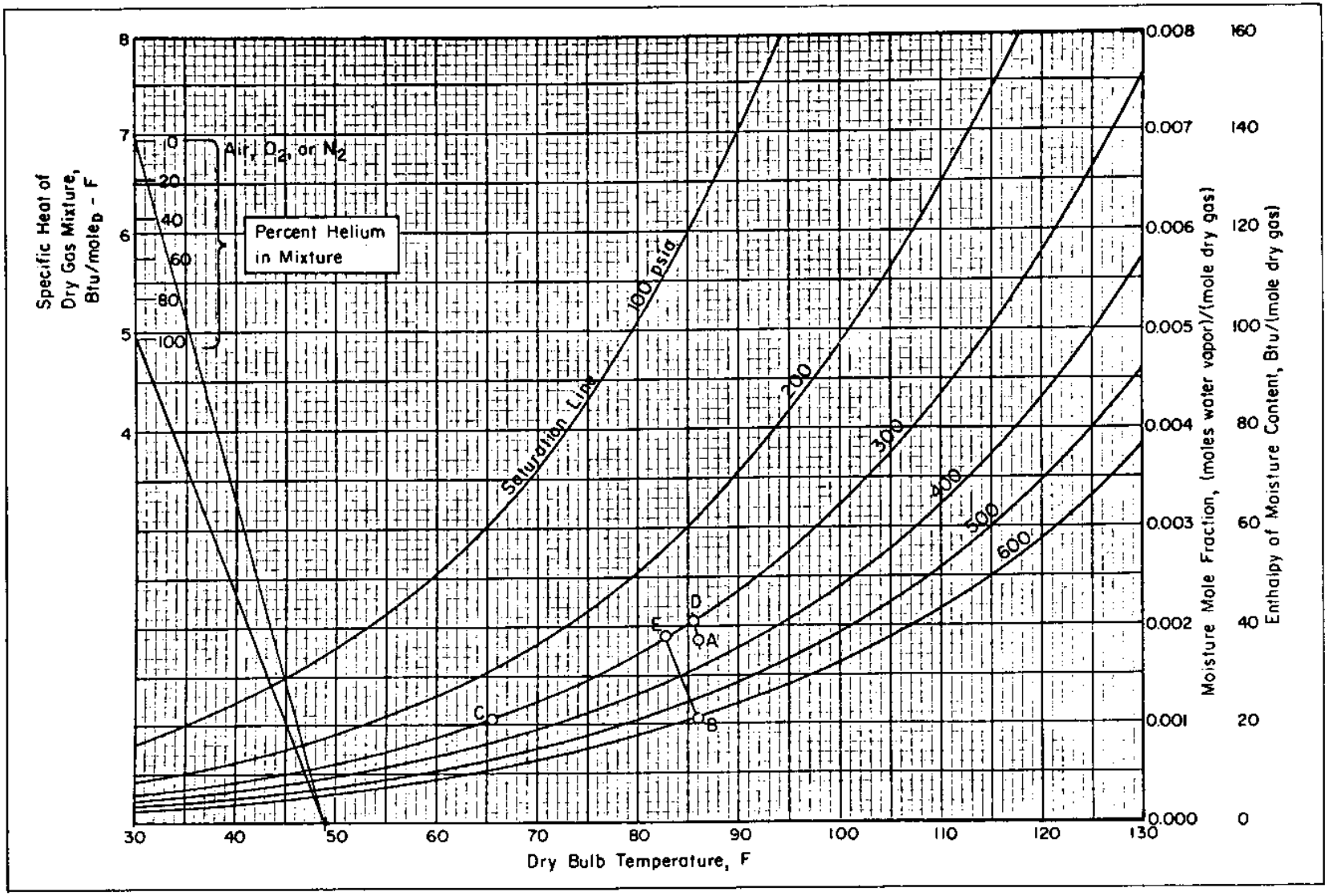

FIGURE 6-22

Psychrometric Chart 2 – Data for Gas Mixtures at Pressures From 100 Psia to 600 Psia (1)

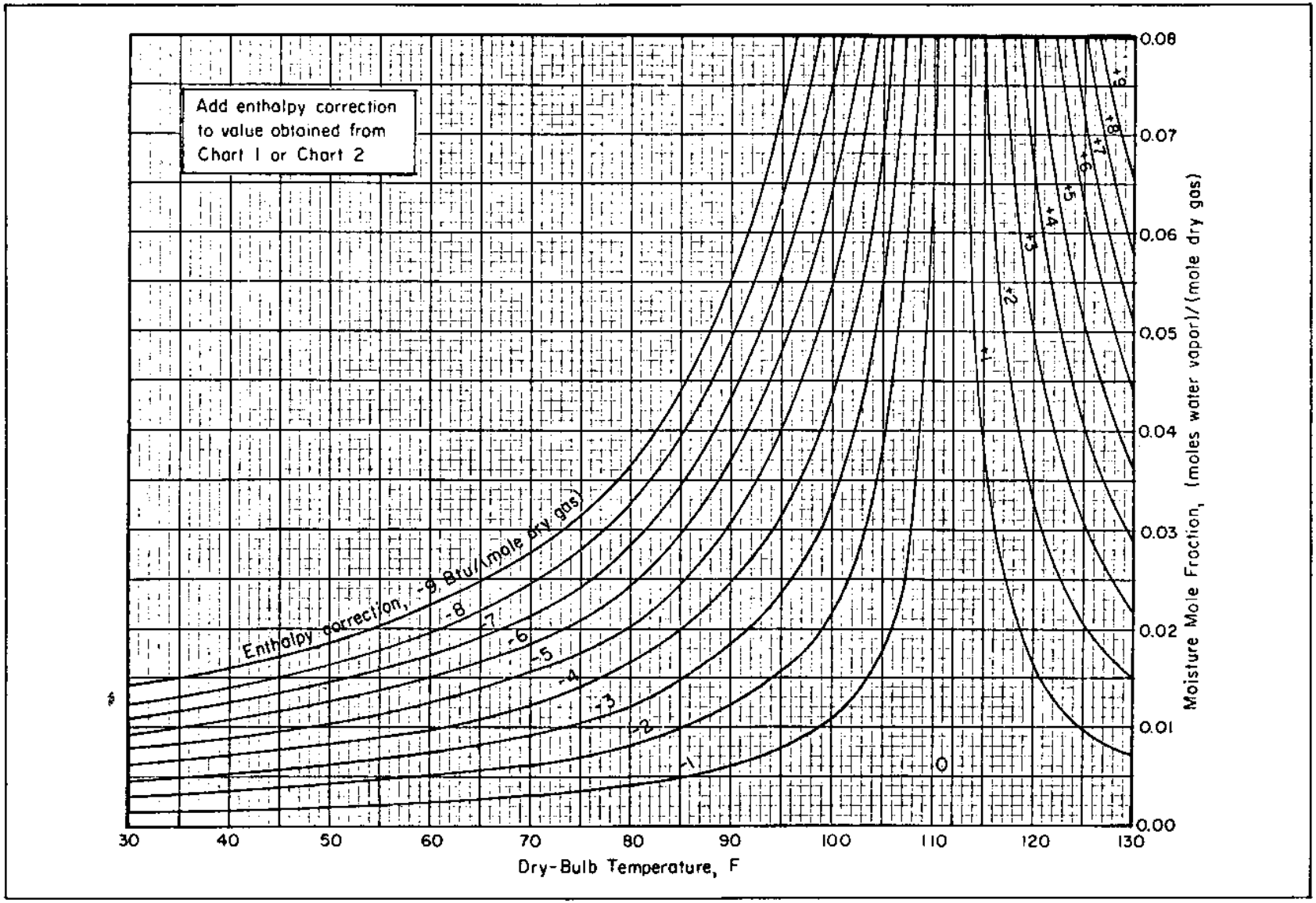

FIGURE 6-23

Psychrometric Chart 3 – Correction for Enthalpy of Moisture Content (1)

The slopes of constant-wet-bulb lines for different gas mixtures are shown in the upper left area of Figures 6-21 and 6-22. The molar specific heats of air, nitrogen, and oxygen are approximately equal at 6.95 Btu/pound-mole, as represented by the highest line, and the molar specific heat of helium is lower, at 4.96 Btu/pound-mole, represented by the lowest line. Lines for gas mixtures containing different percentages of helium are plotted between these limits. To determine a constant-wet-bulb-temperature line, draw a line parallel to the appropriate line in the upper left area of the chart, starting at the intersection of the wet-bulb temperature value and the proper pressure curve. Extend the line to the right until it reaches the desired value of dry-bulb temperature. The mole fraction of water vapor in the mixture at the dry-bulb temperature is read from the right scale. The relative humidity can then be calculated as the ratio of this value to the value corresponding to the intersection of the dry-bulb temperature with the proper pressure curve. If both the dry-bulb temperature and the relative humidity are known, wet-bulb temperature can be found by the following procedure: (1) read moisture mole fraction for saturated gas at dry-bulb temperature and proper pressure curve; (2) multiply this value by relative humidity, and plot the result on the dry-bulb temperature line; (3) draw a constant-wet-bulb temperature line from this point to the left, to intersect with the proper pressure curve. The wet-bulb temperature can be read below this intersection on the temperature scale.

Both enthalpy and moisture concentration appear on the vertical scale of Figures 6-21 and 6-22, with the temperature correction for the effect of mixture shown in Figure 6-23. Most of the enthalpy of the water vapor is in the latent heat of vaporization. Consequently, the water-vapor enthalpy is almost directly proportional to the amount of water vapor present. Enthalpy is expressed in Btu/mole of dry gas.

7. GAS DISTRIBUTION. The following items are important considerations in designing systems for distributing compressed gas to, from, and between the gas system components.

a. Flexibility. Flexibility is necessary in the routing of gasses to provide back-up in the event of critical equipment malfunction. This includes emergency by-pass valves around filters, regulators, or any other equipment where by-pass may be necessary in event of malfunction, and redundant gas supply lines so that loss of one line will not jeopardize the safety of the chamber occupants.

b. Line Size. Proper line sizes are necessary to supply maximum gas flows required by the various system components.

c. Valves. Proper valve sizes and opening rates are necessary to allow system operators to be able to control flows and pressures required to maintain chamber habitability.

d. Dead Ends. Dead ends, bends, and low points should be kept to a minimum in the piping and distribution system but should permit cleaning of the system in place.

e. Exhaust Lines. Exhaust lines should be provided from all gas storage banks. Exhaust lines designed for oxygen service should discharge to the atmosphere at a location which will minimize fire hazards and contamination to the system.

8. COMPRESSORS/TRANSFER PUMPS. Commercially available compressors presently being used for compressing or transferring helium, oxygen, or helium-oxygen mixtures are diaphragm-type compressors. The diaphragm compressor is a combination of two systems, hydraulic on one side of the diaphragm, and breathing gas on the other. The hydraulic system provides the force to move the diaphragm, which in turn compresses the gas.

CAUTION: A system should be provided to positively and rapidly detect the rupture or failure of the diaphragm, before the hydraulic fluid can contaminate the pumped gas. It should be so designed that an interlock circuit will shut down the compressor when failure is detected.

A compressor should incorporate a by-pass check valve, for equalizing pressure across the diaphragm before compressor startings, and a vent to atmosphere immediately downstream of the discharge valve. Gas from compressor/transfer pumps should pass through a back pressure regulator designed to handle the maximum required compressor flow and set at desired flask charging pressure.

System requirements needed to select a compressor/transfer pump include suction pressure, discharge pressure, suction gas temperature, materials, and capacity.

9. GAS MONITORING. The quality of the compressed gas should be continuously, or at least periodically checked to assure that low contaminant requirements are maintained. The contaminants, which should be monitored in the chamber are CO_2, oxygen, and hydrocarbons. Levels and ranges of the various chamber gasses and contaminant limits are discussed in Section 1, Paragraph 2, Breathing Gas Composition Requirements.

Gas analysis equipment is available from various manufacturers for use in testing gas samples for contaminants. Figure 6-24 shows how gas samples are taken from the chamber, reduced to 15 psig, and fed through a capillary line to the analysis equipment to rapidly detect any change in the gas.

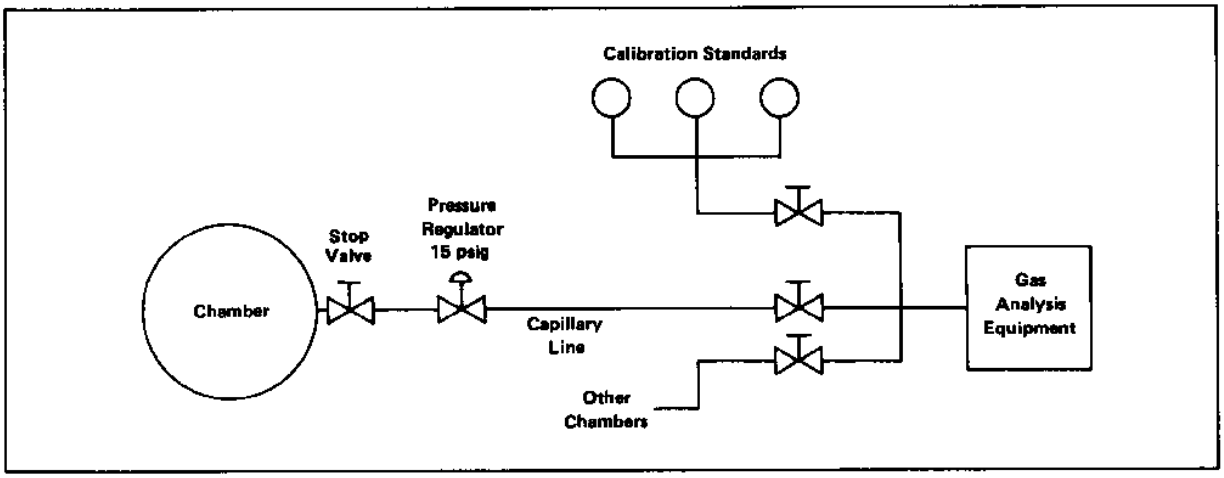

FIGURE 6-24
Gas Sampling Equipment

Section 4. AUXILIARY BREATHING SYSTEMS

1. BUILT-IN-BREATHING APPARATUS. Built-in-breathing (BIB) apparatus should be provided in the chamber for use in rapid descent mixed gas dives, emergency treatments, oxygen therapy, and decompression treatment. Mask, oral-nasal, or mouthpiece type apparatus can also be used to protect against inhalation of products of combustion, excessively hot gasses, or against toxic gasses in the event of chamber atmosphere contamination.

The number of BIB's provided should be greater than the maximum number of chamber inhabitants to allow for the possibility of some of the masks being damaged or being made inaccessible during an emergency. Complete sets of BIB's should allow access to all internal chamber controls.

A typical BIB system is shown in Figure 6-25. The high pressure oxygen or mixed gas is plumbed to the mask supply regulator then through a hull stop valve to the diver BIB mask. The supply regulator is a dome-loaded tracking regulator which is loaded using the chamber internal pressure and regulates the supply pressure to 100 psig over chamber pressure. The regulator on the BIB mask reduces the pressure to a normal demand pressure. A hand-loaded regulator is less expensive and works effectively if the chamber occupants are always near the regulator to make adjustments during the mission. In either case, the regulator must automatically exhaust ascent modes. The overboard dump regulator must be a negative bias regulator with a maximum discharge pressure of 15 psig. Keyed disconnects will prevent wrong hose connections.

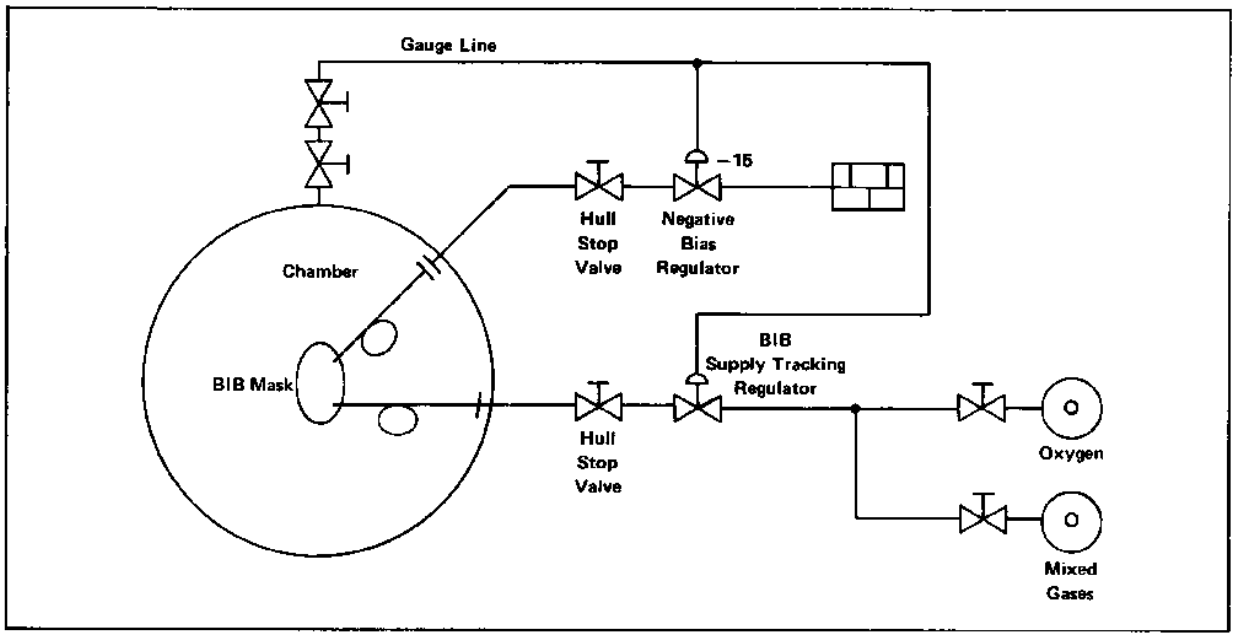

FIGURE 6-25
Typical BIB Gas System

The open-circuit BIB mask exhaust leads to the chamber itself directly from the mask, or to an overboard dump system, which discharges the unused gas outside the chamber. The chamber exhaust or the overboard dump is preferred to prevent an uncontrolled O_2 buildup within the chamber which will present a fire hazard. If the mask exhausts directly into the chamber, the ventilation requirements specified by the U.S. Navy Diving Manual (12.5 cubic foot per minute per man at rest, or 25 cubic foot per minute per man not at rest) are excessive. The intent of the Diving Manual (Reference (3)) is to maintain the oxygen level in the chamber at less than 22.5 percent. An overboard dump system should have minimal exhalation resistance and fail-safe provisions against depressurization in case of component malfunction. The overboard dumps are in effect back pressure regulators which must pass a large flow with only a very slight pressure rise.

Section 5. ATMOSPHERE MONITORING

1. ENVIRONMENT BREATHING GAS ANALYSIS. The quality of the environment and the breathing gasses within the chamber complex must be continuously monitored for the safety of the occupants. The monitoring must consist of a combination of an on-line, full-time analysis of three important constituents: oxygen, carbon dioxide, and total hydrocarbons. In addition to the continuous analysis, there shall be a periodic (three times a week during a saturation dive) gas sample taken and sent to a gas laboratory for a complete gas analysis. This analysis will not only provide a record of the complete constituency of gas within the chamber, but it will also verify the accuracy of the on-line systems.

In the continuous on-line analysis shown in Figure 6-26, gas is drawn from the chamber through a gas sample penetrator equipped inside with a suction protection tee, designed to protect against injury due to a negative pressure.

Outside the chamber, a hull stop globe valve followed by a pressure reducing regulator is installed. The pressure regulator has been found to work best when set at 15 psi output. Capillary tubing from the regulator to the analysis equipment provides rapid transfer of gas from the chamber to the instruments for rapid monitoring of chamber environmental changes. Calibration gasses are necessary to verify and calibrate the monitoring instruments during operational use.

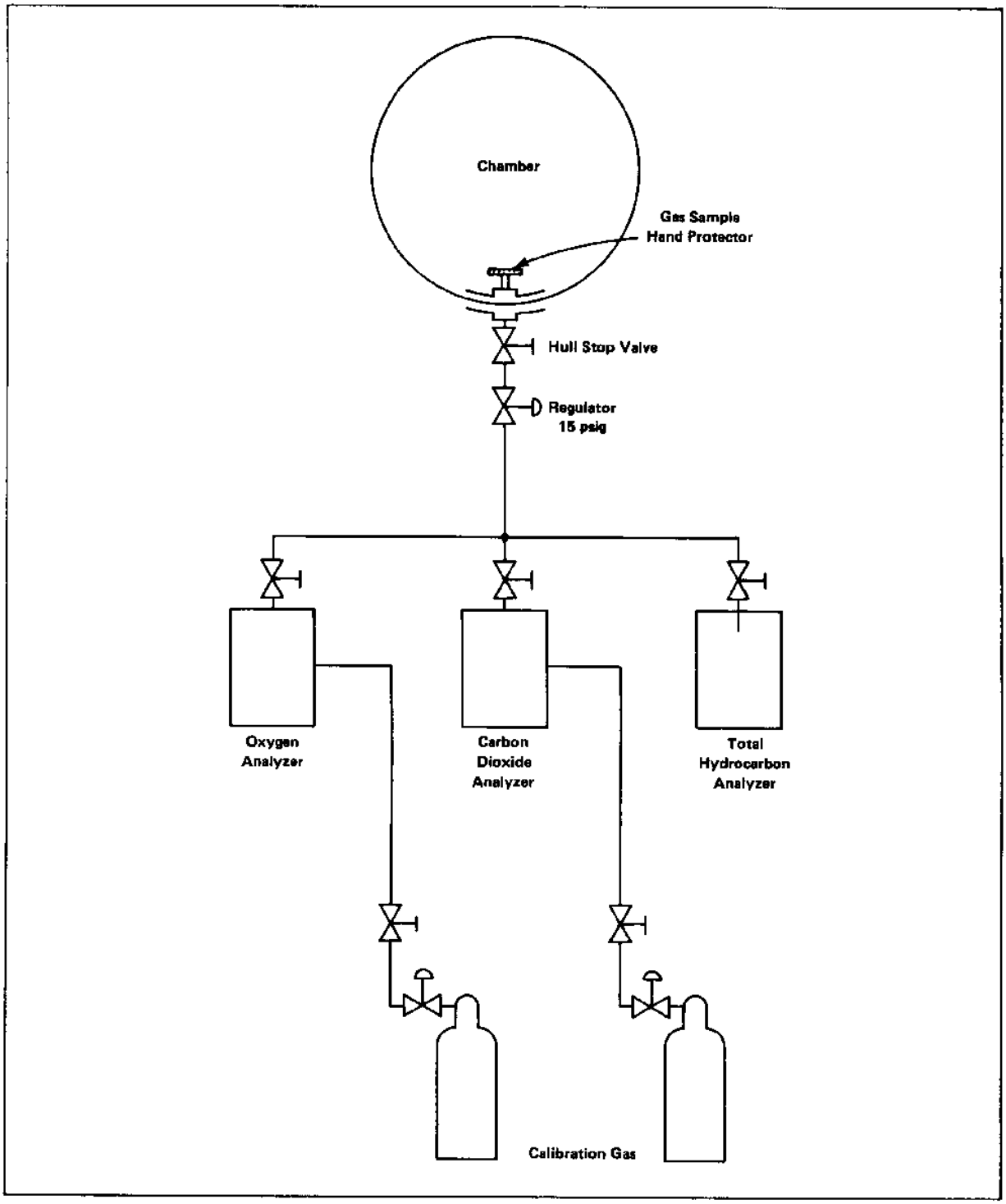

FIGURE 6-26
Typical On-line Gas Analysis System

Section 6. FOOD SUPPLY

1. FOOD SUPPLY. Food is always prepared outside the PV to prevent hydrocarbon buildup. Food is passed into the PV through a service lock. A food cooler, when required in the PV, will use only ice cubes as the cooling medium.

Section 7. POTABLE WATER AND SANITARY SYSTEM

1. POTABLE WATER AND SANITARY SYSTEM. Potable water and sanitary systems are generally classified as water lines and drain lines. Water lines are required to provide hot and cold potable water for the shower, sink, and toilet.

A schematic diagram of a typical chamber potable water and sanitary system is shown in Figure 6-27. Cold water is supplied to the chamber from an external water reservoir which is pressurized at 50 psi over the chamber pressure using helium as the driving gas. Hot water is provided to the chamber from the water in the potable water reservoir routed through a high pressure heat exchanger. The heat exchanger should be sized to operate utilizing boiler water at 190 to 200 deg. F water, to provide a comfortable 160 deg. F tap water to the occupants. The drain system should be designed as a gravity flow to a sanitary holding tank. The valving should be interloaded so that when the sanitary holding tank is full and requires emptying, the tank is isolated from the chamber to prevent accidental injury to the occupants. An equalizing line is provided from the sanitary tank back to the chamber with a filter inside the chamber to eliminate odors. Pressure relief valves set at 60 psi must be installed in both the hot and cold water lines to relieve the pressure in the lines when the chamber pressure is reduced. The electrical interlocking shown on Figure 6-28 provides the safety systems for the sanitary tank.

To empty the sanitary tank, the chamber drain and filter seal valve (A) first must be closed, second the vent valve (B) must be opened, then the drain valve (C) can be opened to empty the reservoir. A valve (D) is provided to add fresh water to flush out the sanitary tank. As noted, a removable flex line (garden hose) is required by the health codes to prevent any cross connection between the sanitary system and the potable water system.

The potable water and sanitary system should have the following features:

a. Hull Valves. The external hull valve should be of the one-quarter turn quick-acting type.

b. Tank Sizes. Potable water supply tanks and waste water tanks should be of same size to prevent overflow, and backup of waste water or sewage into vents.

c. Vents. All tanks should have vents for adequate drainage. Each vent should be equipped with fume and odor filters.

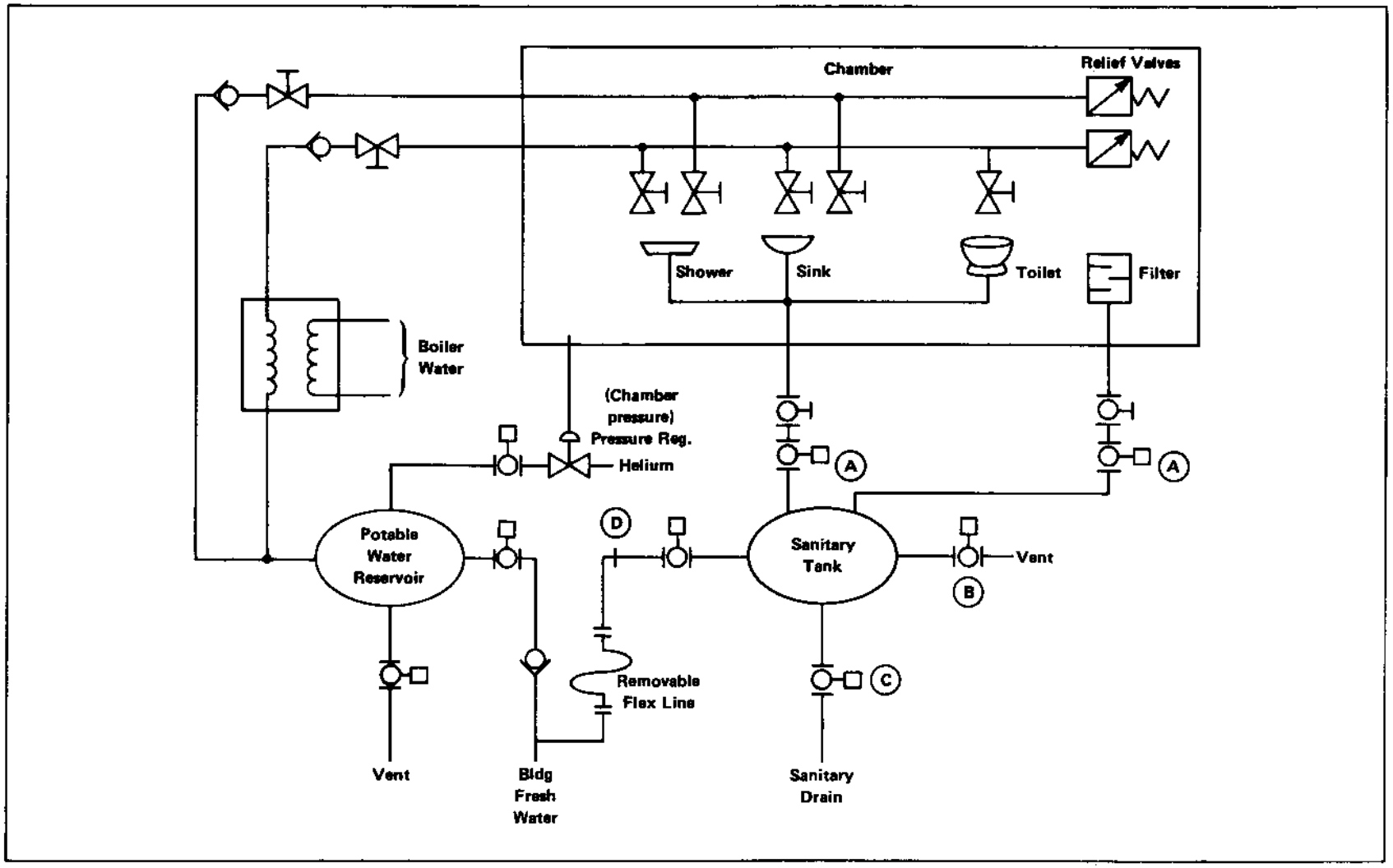

FIGURE 6-27
Typical Potable Water and Sanitary System

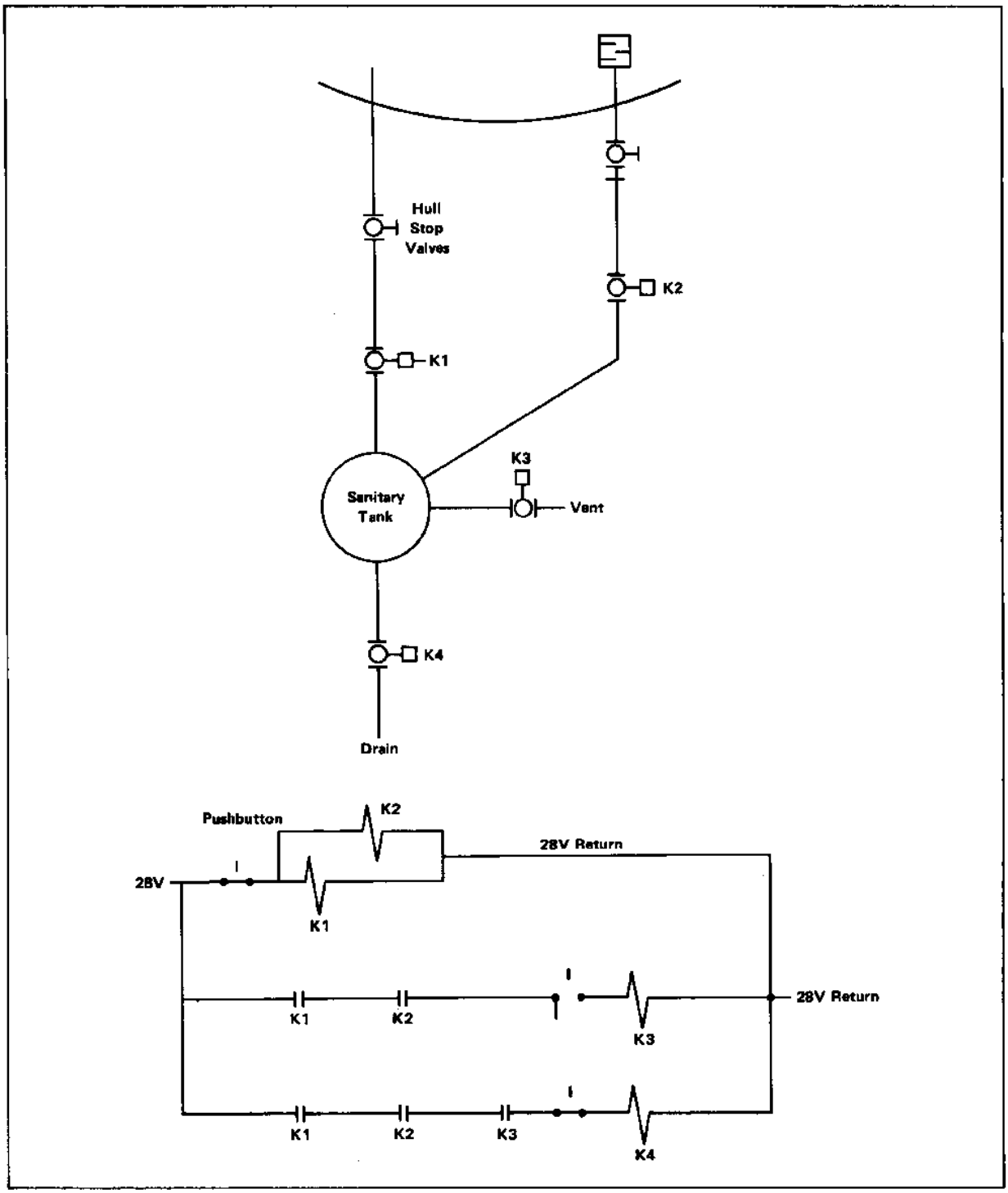

FIGURE 6-28
Typical Sanitary System Interlock

d. Liquid Level Indicators. Each tank should be equipped with positive liquid level indicators with readout at the control station.

e. Pressure Interlock. Waste water tank drain valve should have a pressure interlock to prevent opening under high pressure and exhausting high pressure gasses into municipal sewer lines.

f. Mixing Valve. The shower should have a mixing valve to prevent accidental scalding of the PV occupants.

g. Waste Line Size. Waste lines and valves should have a minimum inside diameter of 3 inches. Valves should open to pass 3-inch diameter solids.

h. Corrosion Resistance. All piping and components should be of corrosion resisting material.

REFERENCES

1. U.S. Navy Diving-Gas Manual, Second Edition, U.S. Navy Supervisor of Diving, Naval Ship Systems Command, (June 20, 1971).

2. Lambertson, D.J., Limitations and Breakthroughs in Manned Undersea Activity, Supplementary Transactions of 2nd Annual MTS Conference, (June 27-29, 1966), Marine Technology Society, 1030 15th Street, N.W., Washington, D.C. 20005.

3. U.S. Navy Diving Manual, NAVSEA 0994-LP-001-9012.

4. Roth, E.M., Space-Cabin Atmospheres; Part IV -- Engineering Trade-Offs of One-Versus Two-Gas Systems, NASA AP-118.

5. Elkins, H.B., The Chemistry of Industrial Toxicology, Second Edition, John Wiley & Sons, Inc., (1959)

6. Williams, D.D., et al, Some Effects of Water Vapor and System Pressure on the Dynamic Reaction of CO_2 with Solid Absorbents, Research Report No. 6-70, Proceedings: Purity Standards for Divers' Breathing Gas Symposium, July 8-9, 1970.

7. Gannoe, R.E., Riley, G.R., and Frink, D.W., Final Report on Gas Monitoring Equipment Investigation, to U.S. Supervisor of Diving, Naval Ship Systems Command, U.S. Navy, (October 1970).

8. Wands, R.C., Some Recommended Standards for Compressed Air for Breathing, Research Report No. 6-70, Proceedings: Purity Standards for Divers' Breathing Gas Symposium, July 8-9, 1970.

9. Riegel, P.S., and Harter, J.V., Design of Breathing Apparatus for Diving to Great Depths, ASME 69-DE-22.

10. NAVFAC DM-3 Mechanical Engineering Design Manual.

CHAPTER 7. WET CHAMBER WATER SYSTEMS

1. SCOPE. This chapter provides design guidance on supplying, treating, and disposing of the water used in the PV water-filled chamber or Wet Pot to provide the occupants with a controlled wet environment. The we pot contains the water with an air space of at least two feet above the water level and a level bottom platform or floor to simulate ocean conditions for the diver entering and leaving the water, and working in the water and on the ocean floor. Information is provided on the water supply and control of turbidity, temperature, and the chemical content of the water. For additional information on water supply, treatment, and disposal, refer to NAVFAC Design Manuals listed in the references.

Section 1. WATER SUPPLY

1. WATER SUPPLY. Water supply for hyperbaric facilities is almost always obtained from the local drinking water supply main as shown in Figure 7-1. Experience indicates that even for large systems, such as the Ocean Simulation Facility at Panama City, Florida, which is 15 feet in diameter by 45 feet long, the water supply presents no serious difficulty.

The designer must first determine the water supply requirements for the wet pot under consideration. These requirements will usually include the total volume of the chamber to be filled, the flow required (how rapidly the chamber must be filled), quality requirements, and frequency of filling. In most instances, the designer will be able to utilize an existing base or municipal water supply. NAVFAC Design Manual DM-5, Civil Engineering (Reference (1)), provides information for establishing a source of water.

a. Volume. The volume of water in the wet pot will be controlled by the dimensions necessary to perform the required missions. The designer must remember that the occupants need an easily removable flat floor on the hemispheric bottom and a two-foot air space above the water level. In general, the wet pot should be filled in less than one hour so that the water can be conditioned for the mission in a few hours. If the mission requires that the wet pot be emptied or drained frequently, a special holding tank must be provided for the drained water to be used again.

The designer will be required to make the anticipated needs of the facility known to the authorities controlling the water supply, who will in turn determine the effects of these requirements on the existing system. It may be necessary to provide special lines to the chamber, or to provide a reservoir which may be filled during hours of low demand on the rest of the supply system.

b. Flow Requirements. If the designer anticipates special needs in the speed with which the chamber must be filled, he will be required to size the lines accordingly (see Chapter 5) and should also make these needs known to

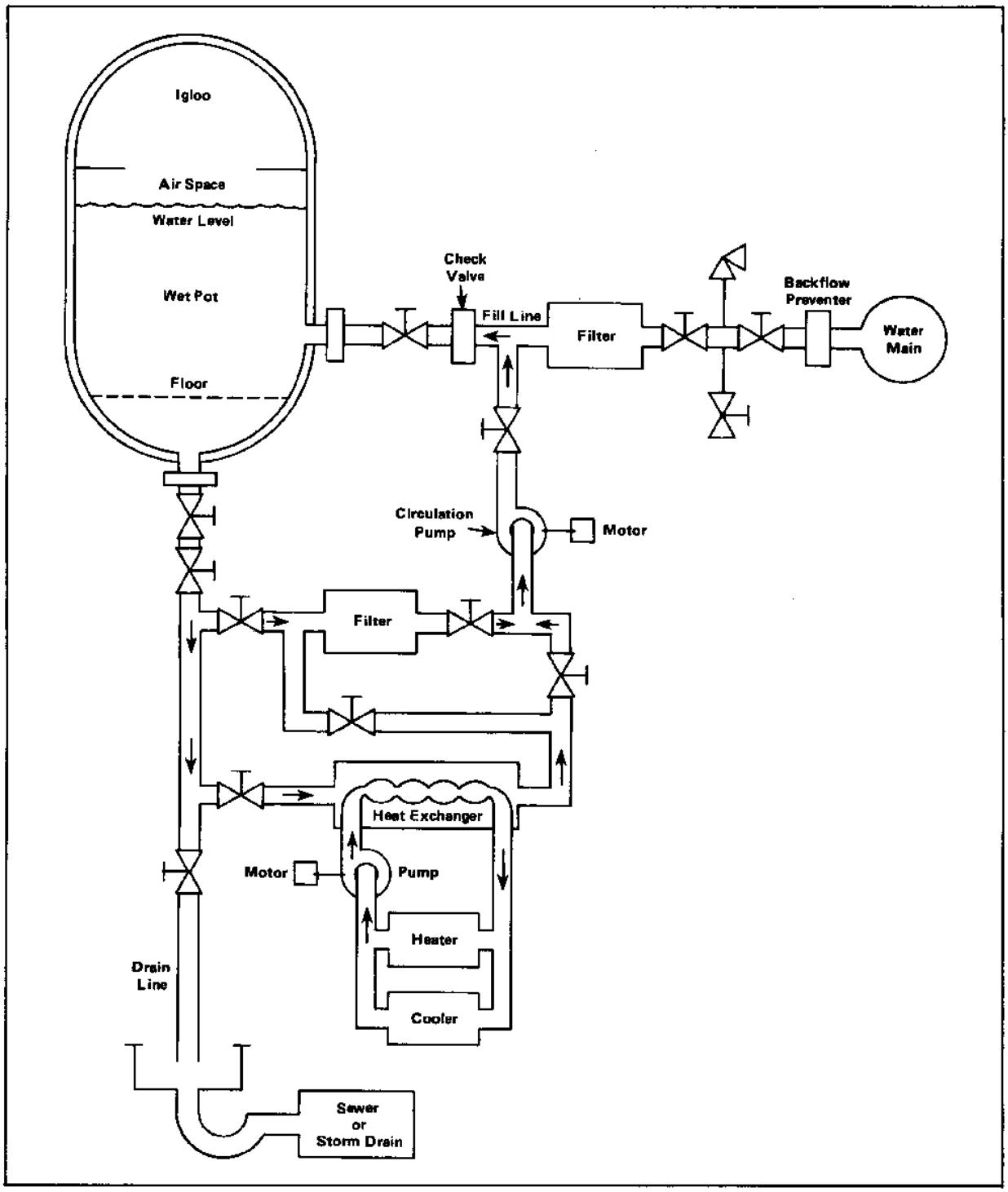

FIGURE 7-1
Wet Pot Water System Schematic Diagram

the supply system operators. The flow requirement is of particular importance as it affects the reserve of the supply system established for peak requirements, particularly for fire fighting and other emergencies.

c. Quality Requirements. The quality requirements for municipal and base water supplies are well spelled out in the pertinent local health codes. NAVFAC DM-5, Civil Engineering (Reference (1)), also has tables which show the limits for various constituents of drinking and industrial water supplies. Knowing these, the designer should familiarize himself with the content of the supply he anticipates using and consider the effects of those constituents on the facility piping, chamber, divers, and equipment to be utilized in the chamber.

2. LINES. The fill and drain lines of the wet pot must be sized to handle the water flow necessary for the missions. Water pressures used in wet pots are usually well above the water pressure and piping strength of the local water supply. To prevent possible damage to the local water supply by inadvertent operation of wet pot valves, positive protection of the local water supply must be provided, such as the backflow preventer shown in Figure 7-1. To prevent possible damage to local sewers, local regulations generally require an air gap between a facility drain pipe and the local sewer as shown in Figure 7-1. The fill line must have a main shutoff gate valve and a reverse flow preventing check valve designed to withstand the intended chamber pressures. The designer should bear in mind that as a general rule, drawing water from a local main at a rate of not more than 8 to 10 thousand gallons per hour will maintain overall water clarity while water velocities for greater flow rates will always dislodge rust deposits and debris in the mains. Removal of rust and debris may require the water to be circulated through the filter for hours.

3. CIRCULATION. It is necessary to circulate the water through filters to control bacteria-algae growth and maintain clarity. Experience has shown that the circulation loop should have sufficient capacity for a complete change of water every 5 to 8 hours.

4. DRAIN. The wet pot should drain by gravity with no gas pressure in the chamber. A pump may be required to assist drainage to elevated sewers. Provisions should be made for draining under gas pressure in an emergency. Under some types of use, the water may be considered polluted and the ecological impact of draining directly into a sewer or storm drain must be considered. NAVFAC DM-5 Civil Engineering, (Reference (1)), provides information on sanitary system requirements.

a. Sanitary Drain. Discharge into a sanitary system may overload the lines and treatment system. The authority responsible for operating the sanitary system should be contacted.

CAUTION: If a sanitary system is utilized, the designer must specify reverse flow prevention valves on all adjacent connecting lines which may be affected by an overload. Situations are on record wherein

inadvertent discharge under pressure from a chamber had a rather violent reversal of water flow in toilets on adjacent sanitary lines. This must be prevented.

b. Storm Drain. Discharge into a storm drain may overload the lines. The authority responsible for operating the storm sewer system should be contacted.

Section 2. WATER TREATMENT

1. WATER TREATMENT. The large volume of fresh water must be treated initially and repeatedly during the mission to reduce turbidity and control bacteria-algae growth.

2. TURBIDITY. When water is collected in large volumes as required in wet pots, the actual turbidity usually exceeds the level that can be tolerated for the mission. Experience has shown that the only practical method of reducing turbidity is filtration which will also remove contaminants that get into the water when the system is in use. Filtration must be a continuing process on the large volume of water so the filters must have very generous capacities and be easily serviced.

It is possible to arrange the chamber system so that a low-cost low-pressure filter will be used only when the chamber is not pressurized. However, the limitations that this arrangement places on the chamber will usually outweigh the one-time benefit of low initial cost. To reduce the initial cost, filters have been installed inside the wet pot, below the floor, but they were discarded because they were difficult and inconvenient to service. A satisfactory filtration system, shown in Figure 7-1, has a pump, filter, valves, and piping suitable for the operating pressures in the wet pot. NAVFAC DM-5, Civil Engineering (Reference (1)), provides information for the selection of filtration equipment.

3. CHEMICAL CONTENT. Virtually all local water supplies contain chlorine and salts of fluorine. There is no need for the designer to consider special equipment or procedures to protect the wet pot occupants and equipment from the effects of these chemicals. Experience has shown that by the time the water has reached an acceptable level of clarity, the undesirable chemical content has been reduced to an acceptable level.

Section 3. WATER TEMPERATURE CONTROL

1. WATER TEMPERATURE CONTROL. The temperature of the large volume of water in the wet pot must be maintained within the temperature range for the mission, normally 70 to 85 deg. F, regardless of the ambient temperature in the building. The designer should remember that the minimum allowable temperature must be dictated by the thermal constraints of the stress analysis and the dictates of the steel used in the fabrication of the wet pot. Under all conditions, the temperature of the water in the wet pot shall not be allowed to go below 34 deg. F. Water at temperatures near freezing are unstable and unpredictable and may freeze suddenly.

The design must provide for the wet pot water to receive or give up heat as required to control the temperature which may be affected by the occupants during the mission. For example, divers using hot water suits which discharge hot water into the surrounding water provide a sizeable heat input to the wet pot water. Heating will normally be required only to bring the wet pot temperature up to and maintained in the 70 to 85 deg. F range.

Wet pot water heating and cooling shall be accomplished by heating and cooling the circulating water in a heat exchanger as shown in Figure 7-1. The water-to-water heat exchanger should be provided with generous pressure relief valves so that an internal failure in the exchanger will not result in a dangerous pressure overload on the heating and cooling systems.

If the system is filled with fresh water it will have to be used at temperatures above freezing. Under this limitation, it will probably be possible to use water as the heat transfer medium from the cooler and then it will be possible to use the same heat exchanger for heating and cooling. This will limit the heat transfer rate of the cooling system as the temperature goes below about 40 deg. F, but if a higher cooling rate is required, it will be necessary to use a different cooling medium and a second heat exchanger. NAVFAC Design Manual DM-3, Mechanical Engineering (Reference (2)), provides information for use in selecting and installing water heating and cooling systems. NAVFAC Design Manual DM-9, Cold Regions Engineering (Reference (3)) provides additional information on water heating systems.

2. INSULATION. The wet pot must be insulated to minimize heat loss and condensation. Viewports on the upper side of the wet pot under conditions of cooling will collect condensation. A plexiglass insulating cover installed on the viewport as shown in Figure 7-2 will reduce condensate collection.

3. LUBRICATION. Lubrication and protection greases for a wet environment has been a hard task because of the overall requirements of withstanding cold and hot water and still protect the steel. If the lubricant is to be used totally submerged, the grease lubriplate is the best overall, but must not be used in the dry environment because it is absolutely not compatible with oxygen.

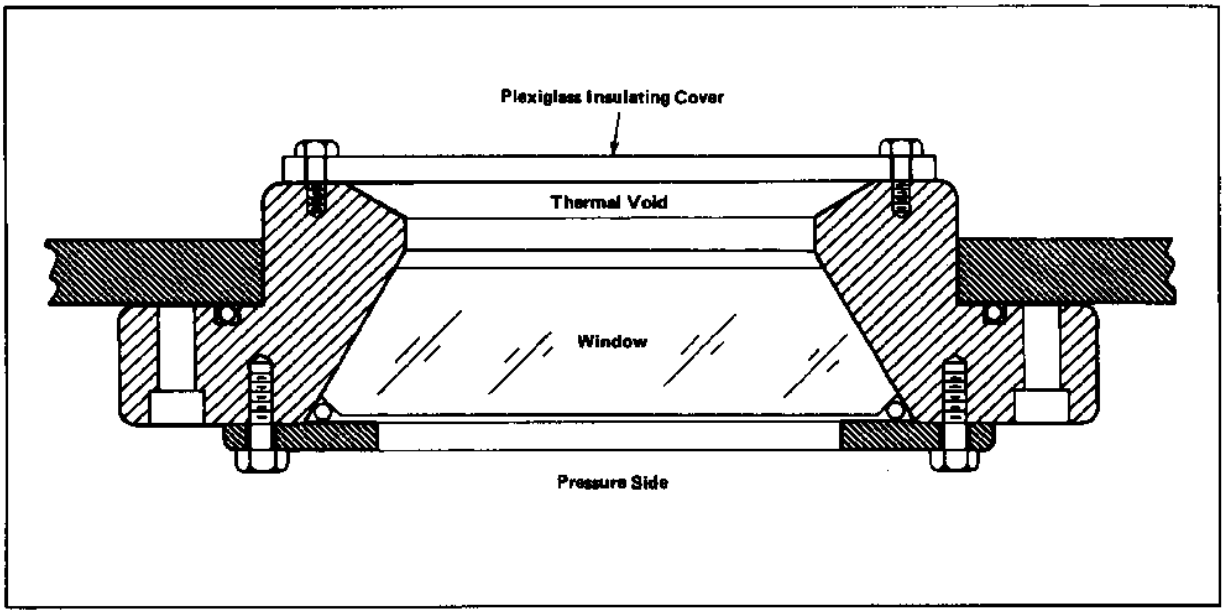

FIGURE 7-2
Viewport Insulating Cover

REFERENCES

1. NAVFAC DM-5 Civil Engineering.

2. NAVFAC DM-3 Mechanical Engineering.

3. NAVFAC DM-9 Cold Regions Engineering.

CHAPTER 8. FIRE PROTECTION AND EXTINGUISHING SYSTEMS

1. GENERAL.

a. Scope. This chapter provides guidance for the design and selection of equipment for preventing and extinguishing fires in hyperbaric chambers. Equipment and procedures currently in use to overcome fire hazards peculiar to hyperbaric facilities are described and reviewed. The requirements and guidance of this chapter are applicable to all U.S. Navy chambers for occupancy by one or more persons and to chambers used to test animals or equipment. Various codes and standards applicable to fire protection in hyperbaric systems are listed.

b. Codes and Standards. The following is a list of National Fire Protection Association (NFPA) codes and standards (Reference (1)) which are applicable to hyperbaric systems, chambers, and buildings.

(1) NFPA No. 56D Hyperbaric Facilities

(2) NFPA No. 70 National Electrical Code

(3) NFPA No. 13 Installation of Sprinkler Systems

(4) NFPA No. 53M Oxygen Enriched Atmospheres

(5) NFPA No. 56A Inhalation Anesthetics

(6) NFPA No. 701 Fire Tests, Textiles

(7) NFPA No. 50 Bulk Oxygen Systems

Also applicable are NAVFAC DM-8 Fire Protection Engineering (Reference (2)) and the U.S. Navy Diving Manual, NAVSEA 0994-LP-001-9012 (Reference (3)).

c. Requirements. All hyperbaric facilities of the U.S. Navy must comply with the appropriate sections of the codes and standards applicable to the specific type of installation. If there is a conflict between this manual and any specific code, this manual will supersede for Navy systems.

2. FIRE PROTECTION.

a. Water Spray. A fixed water spray system shall be installed in all chambers designed for occupancy by more than three people.

b. Spray Density. Sufficient spray nozzles shall be installed to provide uniform spatial coverage with horizontal and vertical jets and a minimum density at floor level of two gallons per square foot per minute. For a horizontal cylindrical chamber, the floor is assumed to be 1/4 diameter up from the bottom.

c. Spray Duration. The minimum duration of application shall be 30 seconds with an additional 30 seconds reserve.

d. Manual Activation. There shall be a manual activator located at each operator's console and at least two locations inside the chamber.

e. Booster Pumps. Booster pumps, when used, shall have a separate independent power supply. Activation control circuits shall have emergency standby provisions.

f. Use Indicators. A visual and aural indication of the system's activation shall be provided at each operator's control console. It shall also be tied into the station's exterior fire alarm system.

g. Manual System. A manual extinguishing system shall also be provided within each chamber.

(1) System shall consist of two three-quarter-inch water handlines, located adjacent to the opposite ends of the chamber,

(2) At least one handline shall be located in each lock.

(3) Each handline shall be activated by a manual quick-opening quarter-turn valve,

(4) Handline pressures shall be approximately 50 psi above the chamber pressure.

h. Electrical Circuits Shutdown. Activation of any fire extinguishing system shall cause all electrical circuits, except communication circuits, to be automatically deactivated. It shall also automatically shut down the oxygen supply to the chamber.

i. Gas Pressurization. A good method of providing the force to drive the fire extinguishing water from the storage tanks is gas under pressure. The gas driving the water is normally supplied to the tank by a pressure regulator which senses chamber pressure and supplies gas to the tank at some fixed pressure higher than the chamber pressure. The driving force is usually set at about 50 psi. A typical gas pressurized fire extinguishing system is shown in Figure 8-1.

When designing a system of this type, it is important to have the sensing lines and the pressure regulator with its supply lines very generously sized. This is necessary so that the driving force is maintained while the water is being driven from the tank. An important consideration which has been frequently overlooked is the fact that the regulator must vent off pressure when the main chamber is returning to the surface.

j. Automatic Operation. It is desirable to have an automatic fire detection and extinguishing system in chambers to keep the critical response time as short as possible, At the time of preparation of this manual, there are no fire detectors available with sufficient proven reliability, that can be depended upon to activate the system if there is a fire and which will not respond to false alarms and drench the occupants and equipment, intermittently during a dive.

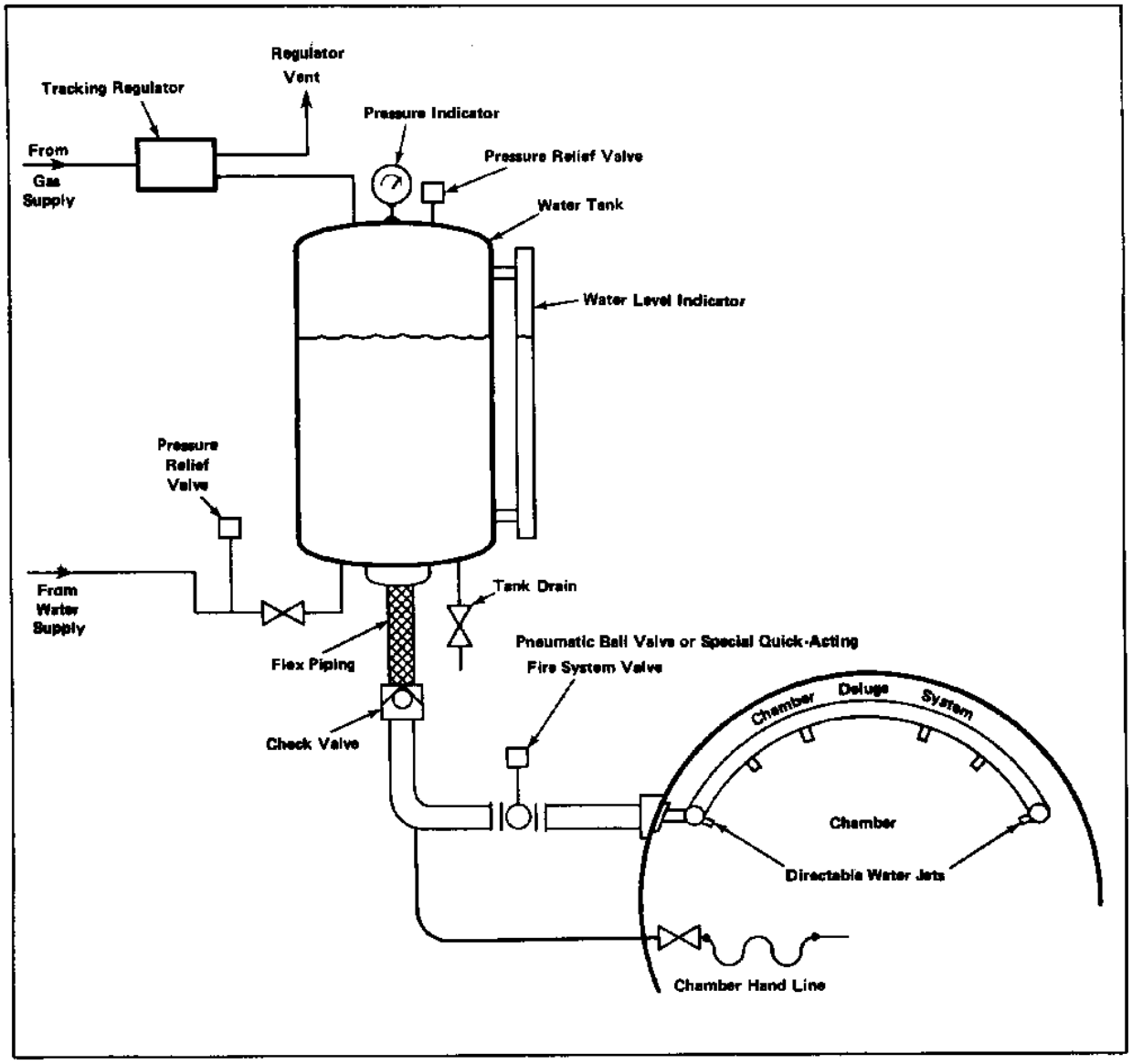

FIGURE 8-1
Pressurized Tank for Fire Extinguishing

Automatic fire system valves are available and therefore provision must be made for the installation of fire detectors in the chambers when they become available. This entails the planning of reasonable detector locations and supports and the provision of at least four electrical penetrations for future use.

3. FIRE EXTINGUISHERS.

a. Minimum Requirements. If the chamber is not equipped with an installed hose or sprinkler system, the Navy Diving Manual requires as an absolute minimum a bucket of water and a bucket of sand.

b. Portable Extinguishers. An improvement over the minimal two-bucket system is the requirement of the Naval Facilities Engineering Command that the chamber shall be equipped with at least one 2-1/2-gallon gas-pressurized water extinguisher. Extinguishers shall bear the label of Underwriter's Laboratories, Inc., shall have stainless steel shells and shall be pressurized with air to 200 psig, Extinguishers shall be installed within the chamber and, if desired, may be supported in a horizontal position to conserve space.

c. Prohibited Types. Halogenated compounds are frequently suggested as possible highly-effective fire extinguishing agents. No studies have been made which would indicate that breathing halogenated hydrocarbons under hyperbaric conditions is not toxic.

d. CO_2 Extinguishers. The use of carbon dioxide fire extinguishers inside chambers is not permitted.

e. Acceptable Compounds. The only fire extinguishing agents acceptable for use in hyperbaric chambers at this time are water and sand.

4. HAZARDS.

a. Basic Hazards. Potential hazards in hyperbaric chambers are sources of fuel, sources of ignition, mechanical hazards, and physiological and medical hazards all of which contribute to fire and explosions.

b. CO_2 Fire and Explosion.

(1) A fire requires the presence of flammable or combustible material, oxygen and a source of ignition.

(2) Materials which are noncombustible or nonflammable under normal atmospheric conditions may become flammable or combustible in a hyperbaric environment, particularly if the oxygen concentration is increased.

c. Oxygen. When a chamber is pressurized with air the partial pressure of oxygen is directly proportional to the increase in absolute pressure. Almost without exception, as the partial pressure of oxygen is increased, the fire hazard is increased.

Other sources can contribute to the increase in oxygen partial pressure in the chamber. When a patient is receiving 100 percent oxygen through a built-in breathing mask (BIB), the mask will frequently discharge directly

into the

chamber atmosphere. Even when the treatment masks are provided with an overboard dump system, oxygen leakage from the mask face seal can add to the oxygen in the chamber.

d. Atmosphere. When a chamber is at surface pressure, the absolute pressure in the chamber is 14.7 psia, this is 0.0 psig or one atmosphere (1.0 ATA). At one atmosphere, the partial pressure of oxygen is 3.09 psia and the concentration is 21 percent, When a chamber is pressurized with air to 33 feet of seawater, the pressure in the chamber will be 29.4 psia or 14.7 psig (2.0 ATA). At this pressure the partial pressure of oxygen will have increased to 6.18 psia and the fire hazard will be much greater, although the concentration is still only 21 percent. As a chamber is pressurized with air, the partial pressure of oxygen and the fire hazard increase together, apparently indefinitely.

e. Fire Zone. When the fire hazards in recompression chambers are discussed, a condition referred to as the Fire Zone is frequently mentioned. This Fire Zone, in which combustion can take place, is considered to exist down to about 200 feet of seawater, after which the atmosphere is supposed to be too dense to support combustion.

THIS IS A SERIOUS MISCONCEPTION.

When a chamber is pressurized with air, the fire hazard increases as the pressure increases, apparently indefinitely.

The Fire Zone is a condition which is obtained when a chamber is pressurized with air to 33 feet, at which time the oxygen pressure is 6.18 psia. After reaching this depth, if the pressurization of the chamber is now continued using helium, the ability of the chamber atmosphere to support combustion will decrease from a maximum at 33 feet to essentially zero at 200 feet. At this pressure, the thermal capacity and other effects of the helium makes normal combustion essentially impossible.

THIS EFFECT IS THE FIRE ZONE.

Generally, the oxygen concentration in the chamber atmosphere for deep dives is maintained at low levels to avoid oxygen toxicity. This decrease in the oxygen percentage may also render the atmosphere incapable of supporting combustion under certain carefully-defined conditions. Three zones representing complete combustion, incomplete combustion, and noncombustion are shown in Figure 8-2. From this figure it is possible to compute the depth at which combustion will be supported for a given oxygen content in the environment. Figure 8-3 compares the oxygen absolute pressure with the depth in feet of seawater (FSW) showing the Fire Zone, which is defined to exist in the range of oxygen content above the zone of noncombustion in Figure 8-2. It should be noted that for chamber operation where the oxygen pressure is maintained at 6 psia, the Fire Zone will range from the surface to 200 FSW. When different concentrations of oxygen exist in the chamber, Figure 8-3 should be consulted to determine the appropriate depth of the Fire Zone.

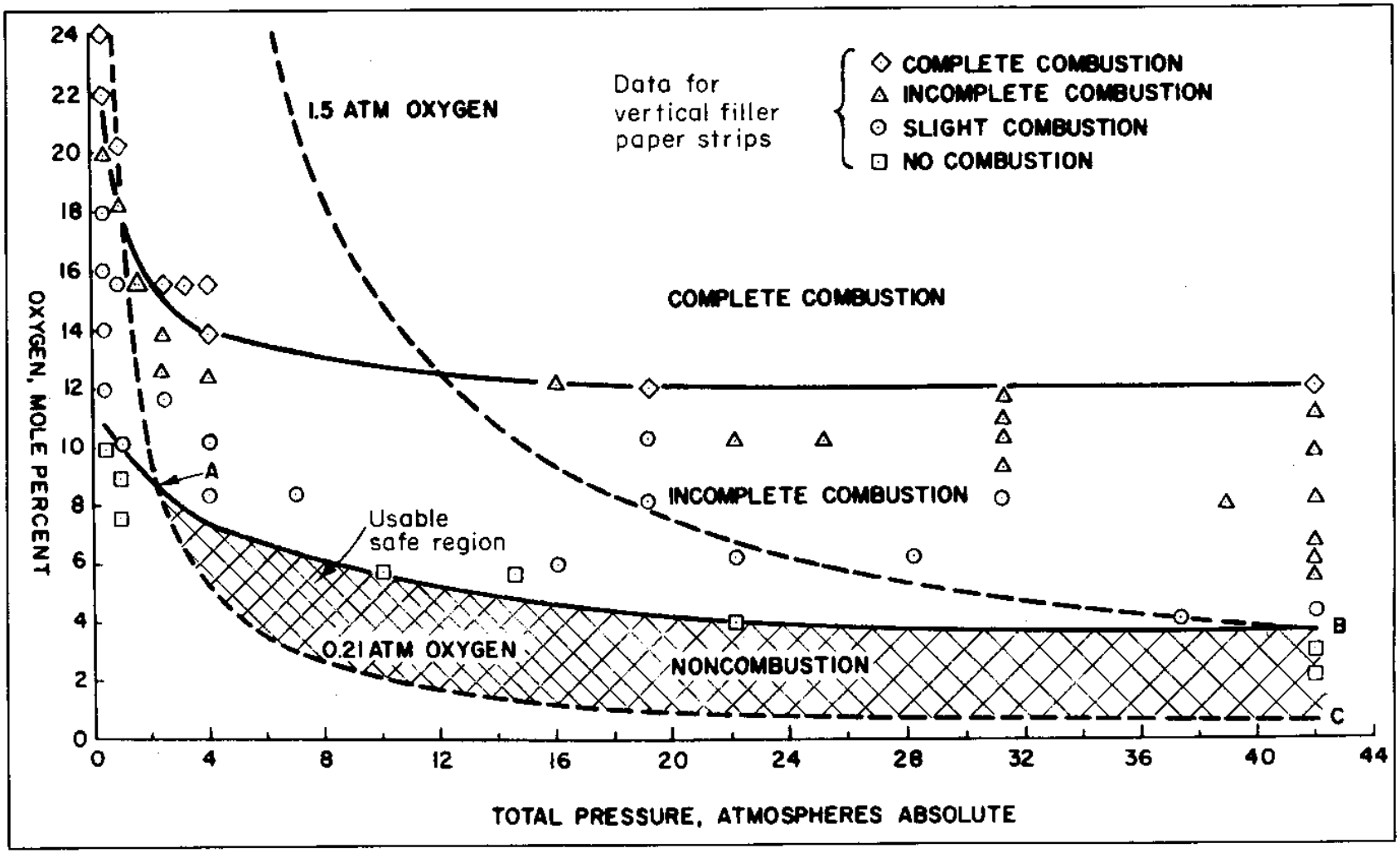

FIGURE 8-2

Physiologically Usable, Fire-Safe Region for Helium-Oxygen Atmospheres (1)

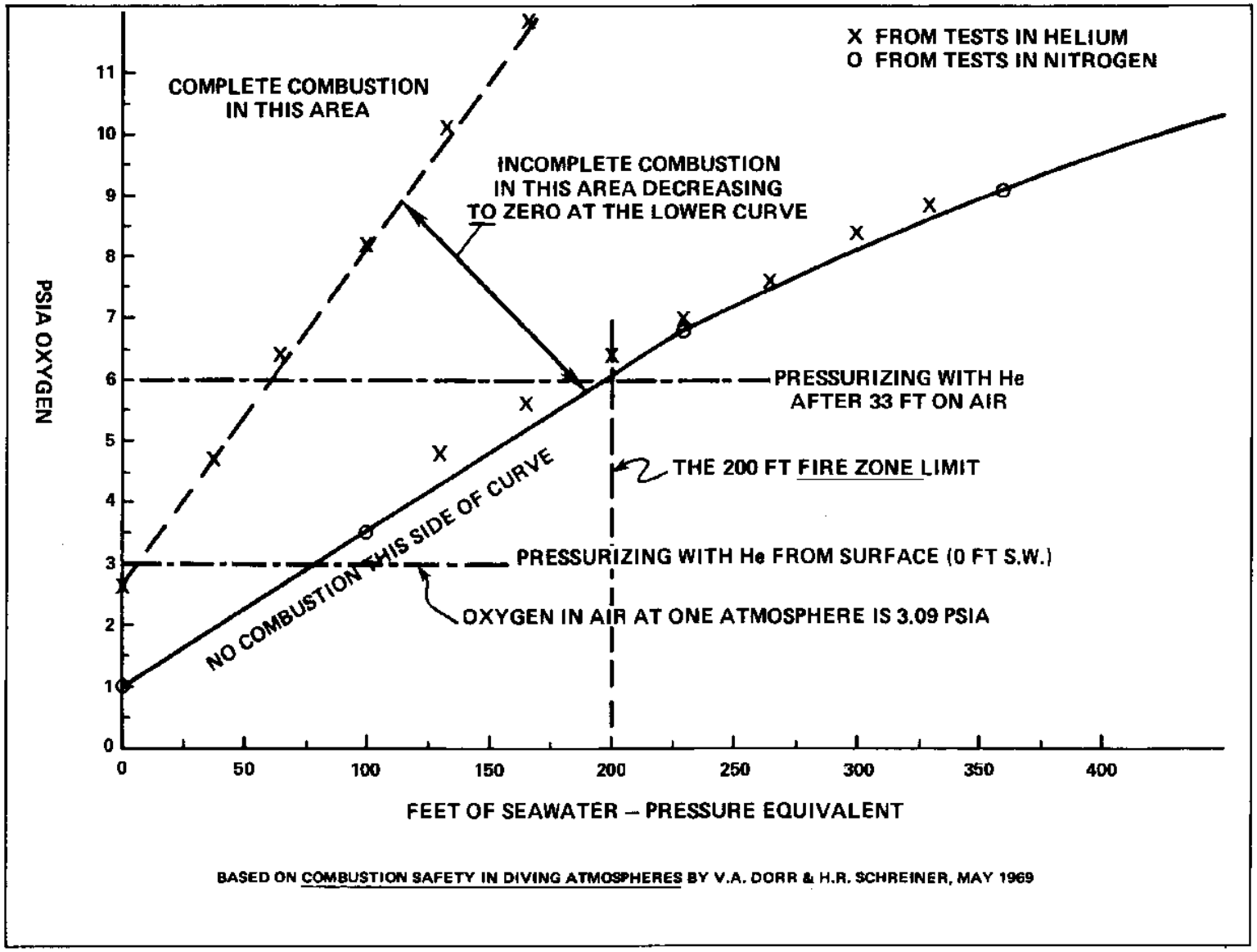

FIGURE 8-3
Combustibility of Material in a Chamber Pressurized First with Air, then with Helium

As a safety Precaution, the oxygen partial pressure and absolute concentration within the chamber should be held to an absolute minimum consistent with the physiological requirements of the occupants. The quantity of flammable materials and potential ignition sources must also be kept to an absolute minimum within the chamber.

f. Protective Clothing. Protective clothing, of materials (such as Durette Gold) which offer protection even in high-oxygen atmospheres, should be worn in hyperbaric chambers. In addition, protective clothing should be complete including shoes, socks, underwear, and head protectors, as well as outer garments.

g. Sources of Ignition. Sources of ignition are, but not necessarily limited to: defective electrical equipment, heated surfaces of lamps, open or arching switches, overheated motors, electrical thermostats, static sparks, and mechanically-produced sparks from steel.

5. STRUCTURAL.

a. Chamber.

(1) Floors. Chamber floors must be noncombustible in that they will not burn in 100 percent oxygen at pressures up to 3 ATA (47.1 psia) and be electrically conductive when tested in accordance with National Fire Protection Association Standard 56A (Reference (I)) and will have a resistance not exceeding 1,000,000 ohms.

(2) Bilge. The bilge of a hyperbaric chamber must have a removable overlaying floor for access for cleaning. Where practical, chambers should be constructed without bilges or other enclosures that may collect dirt, dust, or liquids.

(3) Finishes for Corrosion Protection. Only steel chambers are painted. Aluminum chambers are normally a dull, uneven gray color and corrosion products can be easily recognized. Painting an aluminum chamber will hide and further encourage corrosion.

Steel chambers should be painted as follows:

Inside:

One coat of alkyd type, zinc chromate primer, per federal specification TT-P-645.

One surface coat of soft white, semigloss nonflaming (dry), chlorinated alkyd resin, enamel, per MIL-E-17970.

Outside:

One coat primer of the same as inside. Two coats of gray, semigloss, nonflaming (dry), chlorinated, alkyd resin, enamel, per MIL-E-17972.

This is the recommended Navy finish. Other equivalent finishes may be used if a different color is desired. Whatever colors are used, painting should be kept to an absolute minimum.

(4) Sound Deadening Materials. Sound deadening materials, when installed within the chamber, must be noncombustible in that they will not burn in 100 percent oxygen at pressures up to 3 ATA (44.1 psia), and must not be a sponge like material that will retain moisture and promote bacterial growth.

b. Building Construction.

(1) Two-hour Fire-Resistant Construction. The chambers and all ancillary service equipment must be housed in two-hour fire-resistant construction in an isolated building or isolated part of a building.

The building must have adequate separation distance in accordance with NAVFAC Design Manual DM-8, Fire Protection Engineering.

(2) Doors. The isolated part of the building must isolate the chamber space from other parts of the building with a two-hour fire-resistant wall with openings protected by at least Class B label, 1-1/2-hour fire doors.

(3) Interior Finishes. Building interior finishes must have a flame-spread rating of 25 or less and a smoke-developed rating of 50 or less.

(4) Sprinklers. Areas housing the chambers and service equipment must be protected by an automatic sprinkler system.

6. EMERGENCY BREATHING APPARATUS.

a. Individual breathing apparatus shall be provided for each chamber occupant. Breathing mixture shall be independent of the chamber atmosphere and shall be sufficient for simultaneous use of all breathing apparatus. Apparatus shall function at all chamber pressures.

b. Portable self-contained breathing apparatus shall be available outside the chamber for use by support personnel.

REFERENCES

1. National Fire Protection Association Codes and Standards, Batterymarch Park, Quincy, MA 02269

   NFPA No. 56D Hyperbaric Facilities.
   NFPA No. 70 National Electrical Code.
   NFPA No. 13 Installation of Sprinkler Systems.
   NFPA No. 53M Oxygen Enriched Atmospheres.
   NFPA No. 56A Inhalation Anesthetics.
   NFPA No. 701 Fire Tests, Textiles.
   NFPA No. 50 Bulk Oxygen Systems.

2 NAVFAC DM-8 Fire Protection Engineering.

3. U.S. Navy Diving Manual, NAVSEA 0994-LP-001-9012.

4. Dorr, V.A., and Schreiner, H.R., Combustion Safety in Diving Atmospheres, May 1969.

CHAPTER 9. ELECTRICAL SYSTEMS

Section 1. PRELIMINARY DATA

1. SCOPE. This chapter provides guidance for the design of electrical systems and selection of electrical equipment in hyperbaric facilities. Electrical energy is a potential hazard in an oxygen-enriched environment because it is the chief source of ignition of flammable materials. Ideally, all flammable materials and electrical energy should be eliminated from the hyperbaric environment; practically, complete elimination is not possible. Therefore, this chapter is devoted to safe use of electrical energy inside the hyperbaric chambers and outside the hyperbaric chambers.

2. RELATED CRITERIA. For criteria related to electrical systems in the Design Manual series, see the following sources (References (1), (2), and (3)):

DM-4 Electrical Engineering

DM-8 Fire Protection Engineering

DM-12 Electronic Facilities Engineering

3. POLICIES.

a. DOD Policies. See Department of Defense, Construction Criteria Manual, DOD 4270.1-M (see Reference (4)).

b. Local Codes. Although the Federal Government is not required to conform to city or district building codes for property within Federal Government ownership lines, local codes should be considered. The design and installation of interior lighting, electric power facilities, and roadway lighting systems should conform, as far as practicable, with adjoining community regulations and standards.

c. National Codes. NFPA 70 (see Reference (5)), the National Electrical Code (NEC) and ANSI C-2 (see Reference (6)), the National Electrical Safety Code (NESC) establish minimum standards of design and installation practices, and their recommendations must be followed. Electrical materials and equipment should conform to the standards of the Underwriters' Laboratories, Inc., or other recognized testing agencies or laboratories.

d. Design Analysis. The design analysis covering electrical systems shall be made in accordance with good design procedures based on the conservation of energy and shall show all calculations used in determining capacities of such systems. Methods and tabulations used in sizing conductors, conduit, protective devices, and other equipment needed to complete a system, which require other than routine methods, shall be included. All calculations shall be clearly shown so that any changes that become necessary due to revisions during construction can be made efficiently. When tables used in the design are taken from publications, the title, source, and date of the publication shall be plainly indicated. The model number and manufacturer of each

major piece of equipment on which space allocation was determined shall be indicated in the analysis. Equipment of at least three manufacturers shall be capable of being installed, serviced, maintained, and replaced in the space available.

e. Specifications. The design criteria in this chapter shall conform to the requirements of NAVFAC Type Specifications TS-16301, Underground Electrical Work (see Reference (7)); TS-16302, Overhead Electrical Work (see Reference (8)); TS-16335 Transformers, Substations, and Switchgear, Exterior (see Reference (9)); TS-16402, Interior Wiring Systems (see Reference (10)); TS-16462, Pad Mounted Transformers (see Reference (11)); TS-16465, Interior Substations (see Reference (12)); and TS-16475, Transformers, Substations, and Switchgear, Interior (see Reference (13)).

f. Requirements for Physically Handicapped. For pertinent information on making buildings and facilities accessible to, and usable by, physically handicapped personnel, see ANSI A-117.1, Making Buildings and Facilities Accessible to, and Usable by, the Physically Handicapped (see Reference (14)).

g. Architectural Considerations. Exterior and interior exposed electrical items shall be shown or indicated as such, and their use shall be coordinated with the architectural design. For electronic facilities, criteria in DM-12 (Reference (3)) shall apply.

h. OSHA Requirements. Provide all safety features in accordance with the Occupational Safety and Health Act (OSHA).

i. Women in the Navy. The design shall provide for the increasing number of women in the Navy.

Section 2. POWER SUPPLY

1. ELECTRIC POWER SUPPLY. In electric power source selection, use the same criteria employed in NAVFAC DM-4 and NAVFAC DM-12 (see References (1) and (3)). Research hyperbaric facilities chambers require primary, standby, and emergency power sources. Recompression chambers require primary and standby power.

a. Primary. The primary power source must provide sufficient power for peak demands during normal operations.

b. Standby. The standby power source must provide sufficient power to carry the minimum essential operating electric load required for absolutely essential operations during the mission that must continue during extended loss of primary power.

c. Emergency. The emergency power source must provide sufficient power for vital operations whose electric power interruption can be tolerated only for relatively short durations.

2. ACCEPTABLE POWER SUPPLY.

a. Primary. The primary source of power may be Navy-owned generating equipment or one or more feeders from an outside electric power system. Distribution voltages are generally 440/277 volts, 3-phase, 60 Hz, or 208/120 volts, 3-phase, 60 Hz AC.

Potentials inside the chamber should not exceed 120 volts and should be supplied from an ungrounded electrical system fed from isolation transformers to minimize shock and fire hazards. See Figure 9-1. If power to devices in the chamber is from a grounded source, ground fault protection must be provided.

Consideration should be given to the use of low voltage dc power for equipment in hyperbaric chambers.

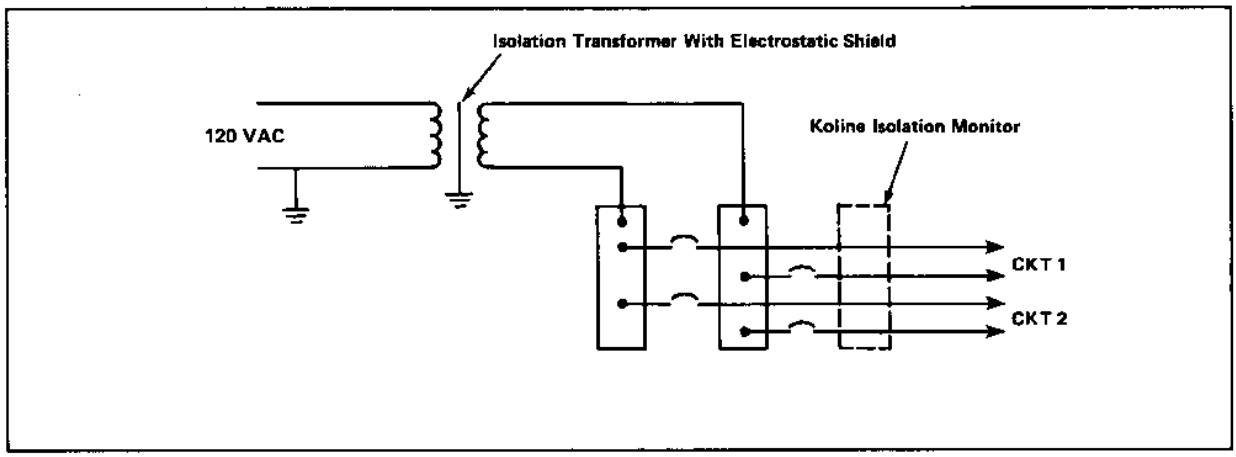

FIGURE 9-1
Example of Isolation Circuits

b. Standby. The standby source of power may be Navy-owned generation or service supplied over a feeder or feeders from a different outside electric power supplier. The most important requirement for a standby supply is to insure that chamber life support, and basic monitoring and communication functions are not interrupted for more than a minute by a primary power failure. The simplest standby is an auxiliary gasoline or diesel engine driven generator set to take over supply at the mains. The auxiliary generator set should have battery start capability with automatic initiation at the moment of failure of the primary supply. The generator set should also have manually initiated electric start and hand cranking or hand accumulator start for use if the automatic starting sequence fails. The generator set battery supply should be accessible for checking and charging at specified intervals. Simulated failures with automatic and manual starting should be rehearsed at specified intervals. An additional battery power supply should be maintained to provide power for monitoring critical life support functions such as partial pressure oxygen and carbon dioxide (PO_2 and PCO_2) and the fire protection system.

In the event of primary power failure, the following critical circuits must be automatically connected to the standby power supply and restored to normal operation within ten seconds after interruption of the primary supply.

(1) All life critical electric circuits.

(2) Inside chamber lighting circuits.

(3) Outside chamber lighting circuits near critical controls and indicators.

(4) Chamber atmosphere monitoring and control circuits.

(5) Fire protection and alarm circuits.

(6) Communication circuits. A sound-powered telephone should be furnished as a backup.

Section 3. WIRING

1. WIRING OUTSIDE CHAMBERS. All wiring outside the chambers must be in accordance with DM-4, Electrical Engineering (Reference (1)) and NFPA 70, National Electrical Code (Reference (5)). Wire must be routed through cable trays, raceways, or conduit of steel or aluminum.

2. WIRING INSIDE CHAMBERS. Electric wiring inside hyperbaric chambers is a potential ignition source which should not be present. When electric power must be used in the chamber, single-phase AC or DC with potentials not exceeding 120 volts may be used. Consideration should be given to the use of low voltage DC systems (6, 12, 24, 48 volts).

a. Intrinsically Safe Circuits. When electric circuits must be designed for and installed in the chamber, they should be intrinsically safe in that they are incapable of producing a spark or causing ignition.

The fundamental idea of intrinsic safety is to limit the energy which circuits can draw from a power supply, even under fault conditions, to levels which are incapable of causing ignition in a hazardous atmosphere. The bulk of intrinsic safety research has been directed toward use in explosive industrial atmospheres such as methane and hydrogen in air at one atmosphere. However, the basic approaches should be applicable to hyperbaric conditions once minimum ignition energies are determined. Recent references on intrinsic safety include Redding, R.J., Intrinsic Safety (see Reference (15) and Magison, E.C., Electrical Instruments in Hazardous Locations (see Reference (16)).

An example of one approach to an intrinsically safe circuit is shown in Figure 9-2. The DC power supply is equipped with:

(1) A grounded screen between primary and secondary windings.

(2) A current-limiting resistor in series with the load.

(3) A voltage-limiting Zener diode across the load.

This circuit is much safer than an unprotected supply since steps have been taken to maintain isolation and to limit the energy which can be drawn even if the load is accidentally short circuited.

b. Explosion-Proof Circuits. Explosion-proof circuits of mineral insulated wire or rigid metallic conduit and electric equipment sealed within explosion-proof enclosures are acceptable but not as desirable as intrinsically safe circuits. The idea of containing an explosion within a sealed enclosure which will not fracture is good, but maintaining the integrity of the seals in the wide range of pressures and pressure differentials in the chamber is a big problem. Explosion-proofing wiring practices are contained in NFPA 70, the National Electrical Code (Reference (5)). Hyperbaric atmospheres are Class (1), Division (1), Group C atmospheres as defined by the Code. Explosion proofing increases the bulk, weight, and cost of the circuit components.

c. Termination. All wires to be routed into the chamber must terminate on a terminal board before entering the chamber. All wires routed within the chamber and carrying current greater than 50 ma shall be hard-wired, soldered, or terminated on terminal boards. Wires carrying low signal voltages may be installed in removable connectors of the screw type to prevent accidental parting and arcing.

d. Raceway. All power conductors inside the chamber must be installed in rigid metallic conduit. For research facilities where many tests are conducted and a wide variety of leads for signals and instrumentation are required, the designer should give consideration to the installation of terminal boards with a variety of connectors. The tester or experimenter can attach the leads to the terminal board for the transmission of data to equipment outside the chamber. This eliminates the experimenter having to locate a penetration wherever one is available, All connections should be of the locking type to prevent accidental disconnection.

e. Separation of Power. All power cables, low-voltage cables, and signal cables must enter the chamber through separate penetrations.

f. Cable Insulation. Insulation on all cables installed in chambers must be nontoxic and nonflammable in oxygen-enriched environments. Tests have shown that Teflon-coated wire and Kaptan polymide film over FEP insulation displays these characteristics.

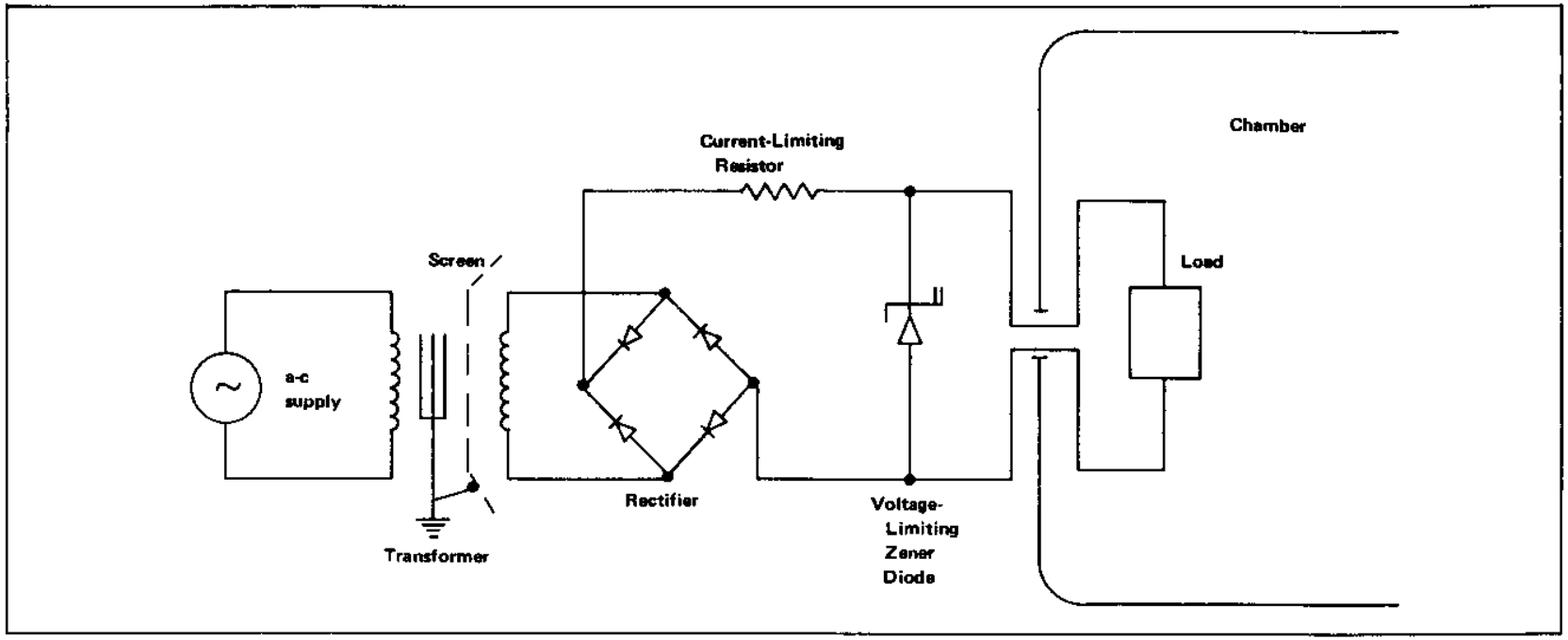

FIGURE 9-2

Example of an Energy-Limited Supply

g. Conductors. Power conductors smaller than No. 12 AWG must not be installed inside the chambers. Aluminum conductors shall not be used. Conductors smaller than No. 12 AWG may be used for communication and signal wiring.

h. Wiring Devices. All switches, relays, outlets, contactors, and other devices which have make-break contacts must not be installed inside the chambers. Motors, fans, hoists, and other electrically-powered equipment must not be installed inside the chambers.

i. Overcurrent Protection. All power circuits and low-voltage circuits must have properly sized overcurrent protective devices located outside the chambers and near the chambers.

3. GROUNDING.

a. Chamber. Each chamber must be connected by a No. 6 AWG copper cable to earth ground. This must be separate from the building, power supply, or other equipment grounds. All metallic equipment inside the chamber must be connected by ground cables to the chamber.

b. Electrical Service. The electrical service ground must not be connected to the chamber. This means that convenience outlet boxes as well as conduit must be insulated from the chamber.

c. Electrical Equipment. Electrical equipment in the chamber, including communication equipment and instrument chassis must not be connected electrically to the chamber.

Section 4. LIGHTING

1. LIGHTING OUTSIDE CHAMBERS. Lighting design for areas around hyperbaric chambers must follow standard lighting design practices in the Lighting Handbook of the Illuminating Engineering Society (see Reference (17)). The illumination level for these areas should generally be 20 to 30 footcandles (FC). Areas containing controls and indicators should have illumination levels of 75 to 100 FC which may be provided by supplemental light directly over control panels. Control panel lights must be serviced by the standby and emergency power supplies in the event of primary power failure.

2. LIGHTING INSIDE CHAMBERS. One of the major elements of the electrical system is the chamber lighting. In the past, hyperbaric chambers and especially recompression chambers have been designed and equipped with standard submarine navigation lights. See Figure 9-3. This light has a standard incandescent lamp contained within a pressure resistant envelope and may utilize AC or DC power. Energy-limiting DC power sources, as shown in Figure 9-2, have been used. A few chamber fires in the past were attributed to the lamp heat as the source of ignition in the oxygen-enriched hyperbaric atmospheres. To eliminate heat and electric power in the chambers, designs of safer chamber lights have been made using external originating light sources and light pipe conductors.

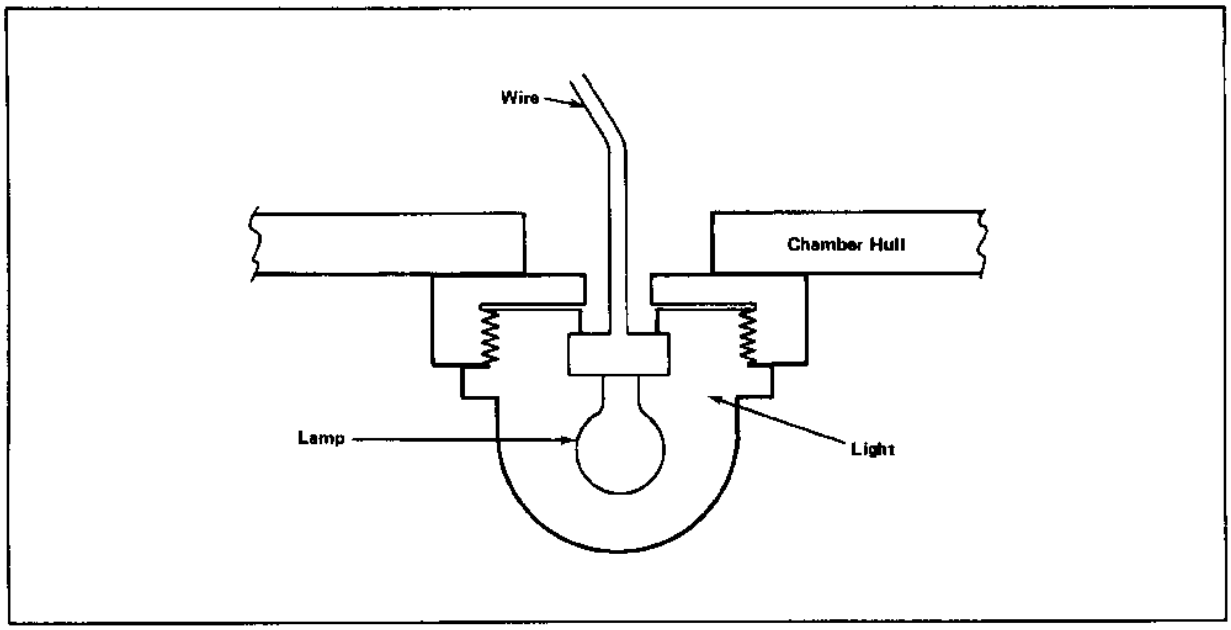

FIGURE 9-3
Hull Mounted Submarine Navigation Light

a. Light Pipes. Light pipes have been designed in many variations for installation in new chamber penetrations and existing penetrations. The light pipe pressure containing window, shown in Figure 9-4, has an acrylic rod and is mounted in a metal housing. The metal housing is sealed to the chamber hull by O-ring and held in place by an external nut. The heat is dissipated by the outside light source over the acrylic rod which transmits the light into the chamber. This is ideal for recompression chambers or low-pressure vessels. Figure 9-5 shows the design preferred for high-pressure hyperbaric chambers. Here the pressure is contained by the viewport window to which a separate acrylic rod interfaces. This design has a disadvantage in that there is a 10% light loss due to constant interference between the rod and window; the advantage is that if the acrylic rod is damaged or broken, it can be replaced from the outside without endangering chamber occupants or stopping the mission.

b. Adapters. Submarine navigation lights may be replaced with safer light pipes.

(1) Hull-mounted submarine navigation light is replaced by an acrylic light pipe and adapter plate, as shown in Figure 9-6.

(2) Stuffing tube type submarine navigation light is replaced by an acrylic light pipe rod as shown in Figure 9-7.

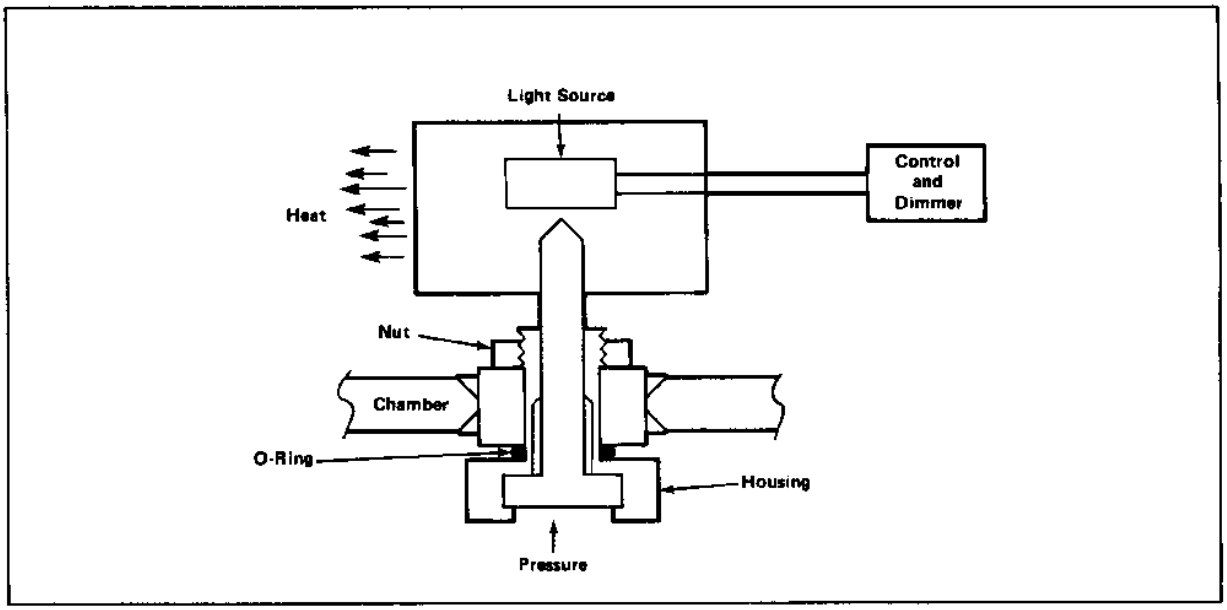

FIGURE 9-4
Light Pipe Pressure Containing Window

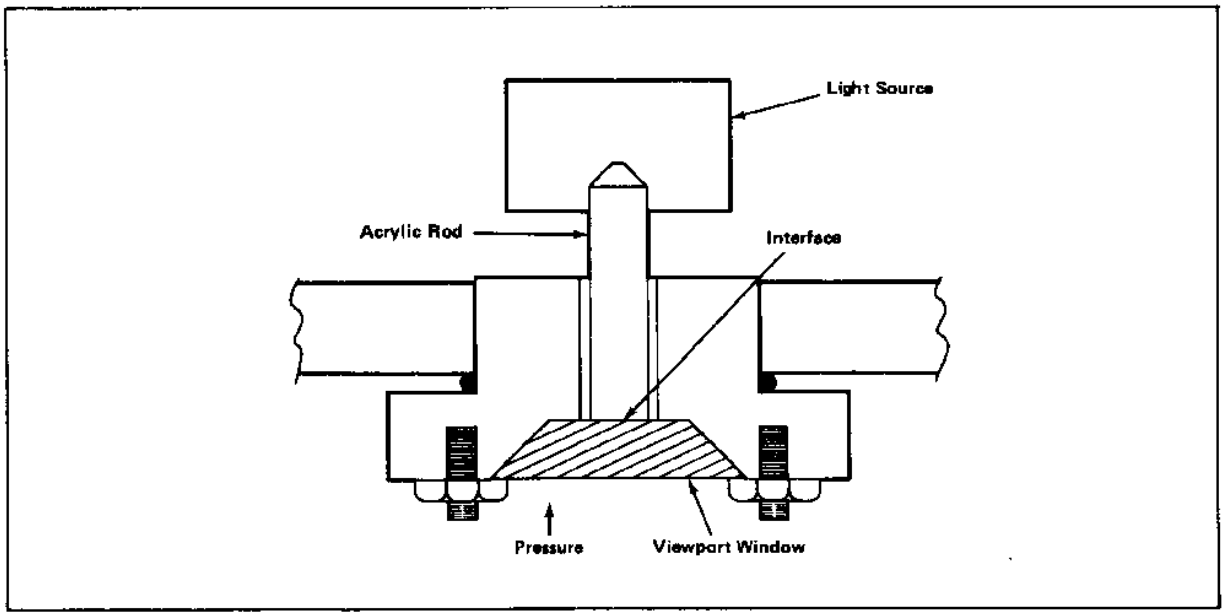

FIGURE 9-5
Light Pipe on Viewport

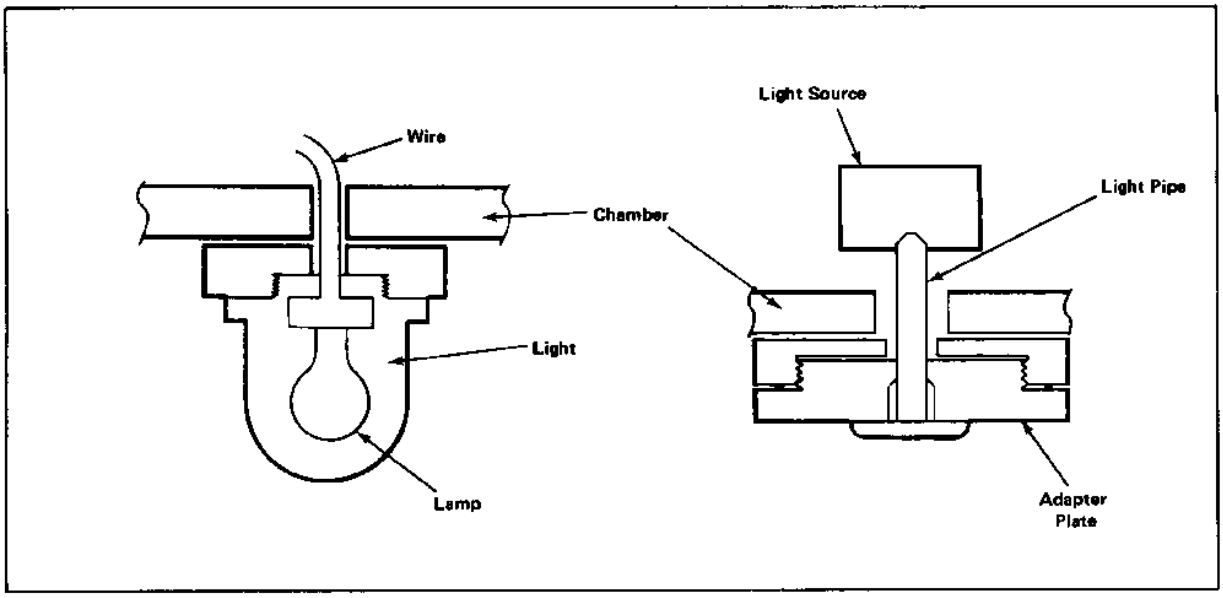

FIGURE 9-6
Hull Mounted Submarine Navigation Light Replacement
by Light Pipe Pressure Containing Window

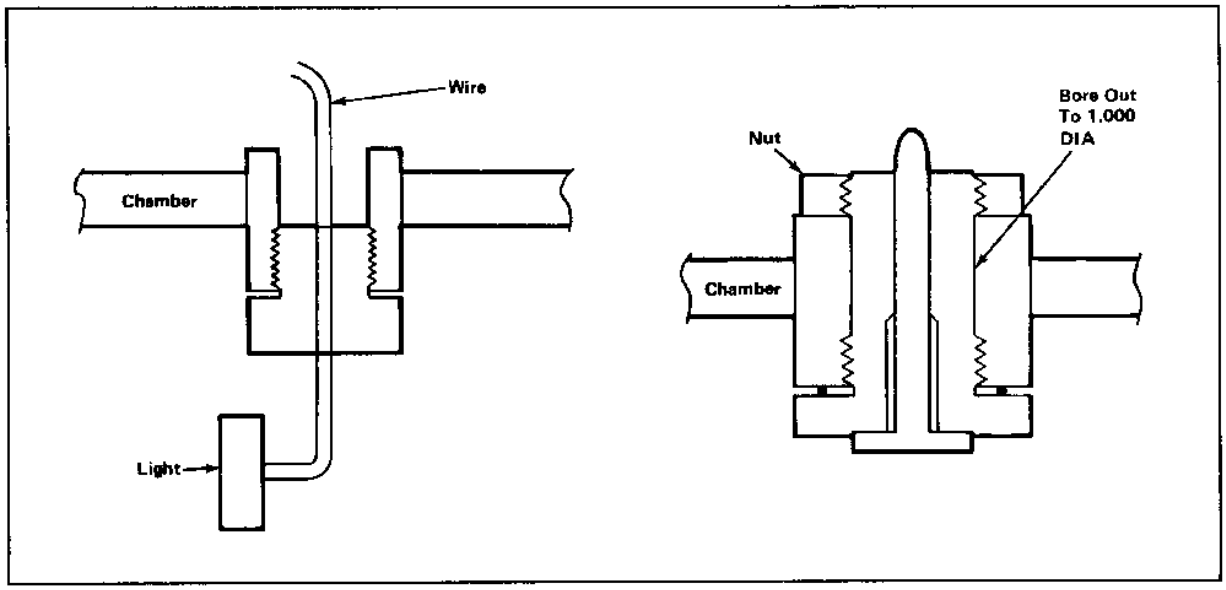

FIGURE 9-7
Stuffing Tube Type Submarine Navigation Light Replacement
by Light Pipe Pressure Containing Window

c. External Originating Light. Light sources may be placed directly over the viewports. This eliminates the internal heat sources and internal electricity for the lights but the loss of view is sacrificed for each light utilized. A word of caution: Heat from the external lamp must not raise the temperature of the viewport window above 113 deg. F. The heat from external lamps can be dissipated in various ways as shown in Figure 9-8.

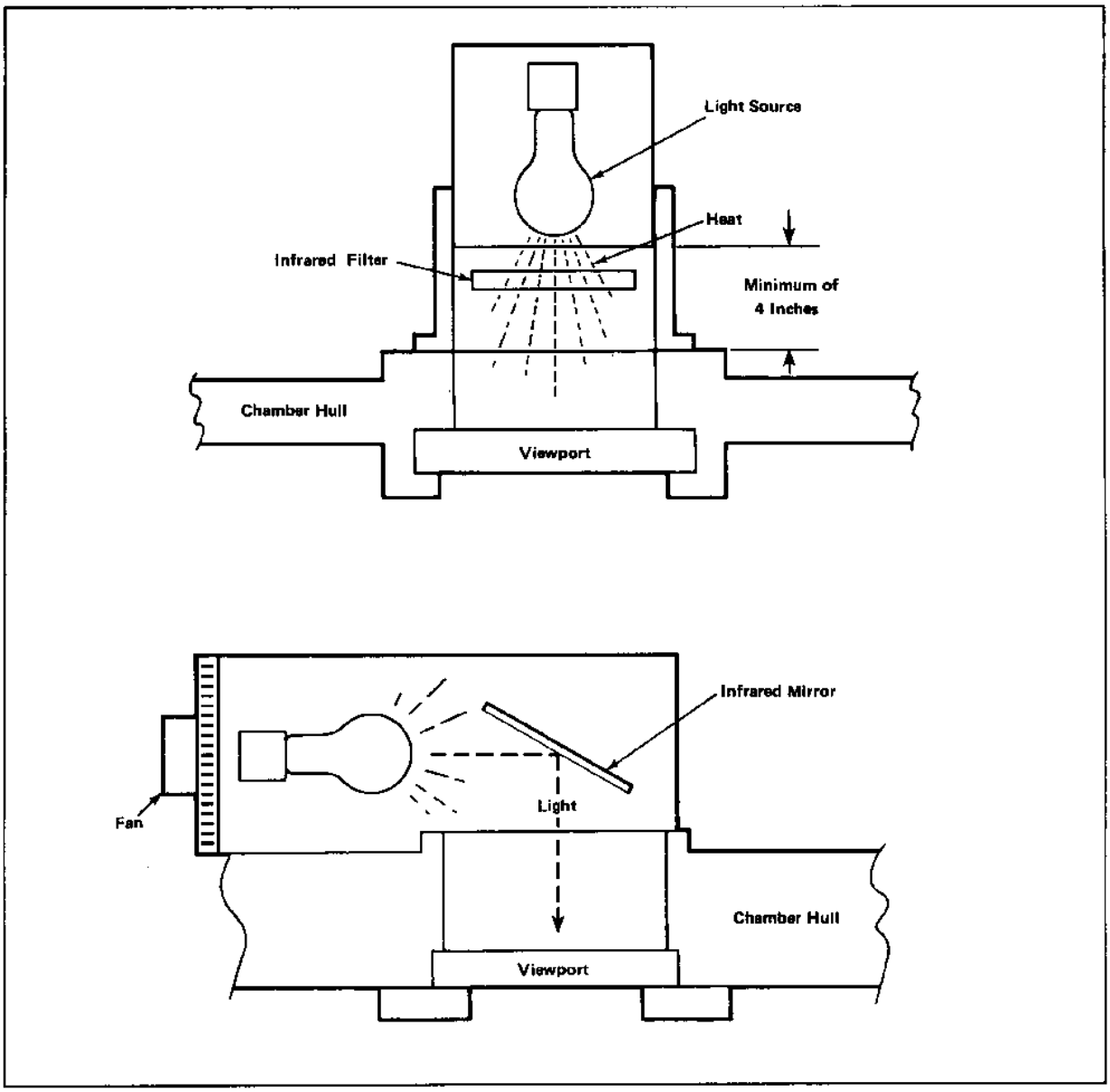

FIGURE 9-8
External Light Heat Shield and Dissipation

3. PERSONNEL LIGHTING REQUIREMENTS. The desired illumination level per unit floor area at various locations %n a hyperbaric complex, and resulting power consumption, will be determined primarily by personnel requirements. The detailed design of interior lighting installations is quite complex and depends on many variables. The entire process is treated in the Lighting Handbook. In this subsection, a small amount of basic material will be given to acquaint the designer with the terms and general approach taken.

a. Illumination. Surface illumination is commonly measured in footcandles, where

1 footcandle = 1 lumen / square foot

b. Illumination Requirements. Table 9-1 gives recommended illumination in footcandles for various grades of tasks.

c. Illumination Realization. To obtain the desired illumination level at the work area, the characteristics of both the lamp and the fixture, or luminaire, must be considered. Generally, light levels inside the chamber should be between 30 and 50 footcandles for personnel comfort. Consideration should be given to providing a means of varying the light intensity.

TABLE 9-1
Recommended Illumination Levels for
Various Task Grades

Task Description	Illumination, footcandles
Performance of visual tasks of extremely fine detail under poor contrast conditions for long periods of time	100 or more
Performance of visual task of fine detail under medium contrast conditions	50-100
Performance of visual tasks of moderately fine detail under better than average contrast for intermittent time periods	25-50
Performance of visual task of simple orientation for short temporary durations	5-10

REFERENCES

1. DM-4 Electrical Engineering.

2. DM-8 Fire Protection Engineering.

3. DM-12 .Electronic Facilities Engineering.

4. Department of Defense, Construction Criteria Manual, DOD 4270.1-M.

5. National Fire Protection Association (NFPA 70), the National Electrical Code (NEC).

6. ANSI C-2, the National Electrical Safety Code (NESC).

7. NAVFAC Type Specification TS-16301, Underground Electrical Work.

8. TS-16302, Overhead Electrical Work.

9. TS-16335, Transformers, Substations, and Switchgear, Exterior.

10. TS-16402, Interior Wiring Systems.

11. TS-16462, Pad Mounted Transformers.

12. TS-16465, Interior Substations.

13. TS-16475, Transformers, Substations, and Switchgears, Interior.

14. ANSI A-117.1, Making Buildings and Facilities Accessible to, and Usable by the Physically Handicapped.

15. Redding, R.J., Intrinsic Safety, London 1971.

16. Magison, E.C., Electrical Instruments in Hazardous Locations, Plenum Press, 1966.

17. Lighting Handbook of the Illuminating Engineering Society.

CHAPTER 10. COMMUNICATION SYSTEMS

1. SCOPE. Good communications in hyperbaric facilities are important both for effective use of the chamber and for operational safety. Too often communications are treated as an add-on feature, resulting in significant personnel inconvenience and lost time. It is thus desirable for the chamber designer to consider communications throughout the design process as an integral part of the chamber system. This chapter discusses audio communications in terms of the special conditions and problems inherent in hyperbaric chambers.

Section 1. AUDIO COMMUNICATIONS

1. AUDIO COMMUNICATIONS. Continuous voice communications with chamber crews is essential for both convenience and safety. Factors to be considered include chamber acoustics, audio system power requirements, pressure effects on equipment, penetration requirements, and overall layout. The layout of the communication system shall give primary consideration to the complexity and intended use of the chamber. For example, a recompression chamber requires a good two-way communication system from outside control to both the inner and outer chambers. A saturation complex will require: (1) an open circuit system in each chamber monitored topside with the other side of the open circuit system providing topside control and general commands to all chambers, (2) at least one (preferably two) closed circuit communications intercom systems from all chambers to topside control. This system will provide also a round robin network between divers and topside, (3) divers in the water should have separate communication links topside and to the tender, in addition to the round robin capability, (4) there should be an in-water open circuit one-way transducer for topside communications to the divers.

2. CHAMBER ACOUSTICS. Because of the small size of most hyperbaric chambers, very little power is required to achieve adequate sound levels. However, the chamber environment presents a number of acoustic problems, including echoes, resonances, and helium speech distortion.

a. Reverberation. Reverberation may be reduced by installing acoustic baffeling panels against the inner hull. These acoustic baffeling panels are commercially available in stainless steel which may be painted to increase light levels within the chamber. To obtain the most effective results, the panels should be installed 1/2 inch from the chamber walls.

b. Resonances.

(1) Problem. Any closed space will have a series of resonant frequencies which tend to be amplified when vibrations of the trapped atmosphere are excited. The effects are usually not troublesome in large volumes, that is, ordinary rooms. In confined spaces with atmospheres of high density, however, the chance excitation of acoustic resonances by machinery vibrations or other sources becomes annoying. Since most chambers are cylindrical, they

tend to behave similar to organ pipes closed at both ends. Figure 10-1 shows the fundamental resonant frequencies for a closed chamber as a function of chamber length, atmosphere type, and total pressure. It can be seen that the resonant frequency increases with pressure and decreases with length. Values above 100 Hz are readily audible to most persons and may be excited by common types of machinery. Accidental tuning of a chamber to 60 Hz could result in annoying resonant vibration due to AC electrical power devices such as transformers and motors in the area.

(2) Correction. Since a chamber must operate over a range of pressures and with a variety of atmospheres, there is little the designer can do to eliminate resonance problems. On the other hand, he can avoid obvious difficulties such as having the chamber tuned near 60 Hz or its multiples at atmosphere, and be aware of the presence of resonances and the factors governing them.

c. Helium Speech Distortion.

(1) Problem. A disadvantage of helium as an inert diluent is its effect on speech. The distortion of human voicing in atmospheres of 90 percent helium and above can be so severe that listeners find less than half the words intelligible. Practice can improve a person's ability to understand the distorted speech, but cannot eliminate the problem.

Good commercial helium speech unscramblers are available for installation into a communication system. Some of the systems are simple expansions of portable diver communication systems and are packaged appropriately for easy installation into an existing communication system. There are more sophisticated systems also on the market which may be designed directly into the intercom communications systems.

3. INTERCOM POWER REQUIREMENTS. For very small volumes with reflective acoustics, such as hyperbaric chambers, the estimated power required is on the order of tenths of a watt. In practice, a good quality amplifier of a few watts output should have no trouble providing sufficient sound energy for communications in the chamber. The system power needs are more likely to be determined by the acoustic conditions outside the chamber, at the monitoring console. Since high quality audio amplifiers up to 100 watts are widely available at low cost, there is no harm in somewhat over-powering the chamber communication system and attenuating as required. This provides reserve capacity for overcoming unusually high background noise and other acoustic disturbances.

4. PROTECTION OF AUDIO EQUIPMENT FROM PRESSURE EFFECTS. Most audio equipment is either immune to damage from increased atmospheric pressure or easily modified to be so.

a. Receiving and Transmitting Devices. The conventional permanent magnet speaker can be used as a speaker as well as a microphone in a chamber atmosphere. Boom microphones as well as headsets utilizing crystal, ribbon, and carbon elements may be used with no pressure effecting problems.

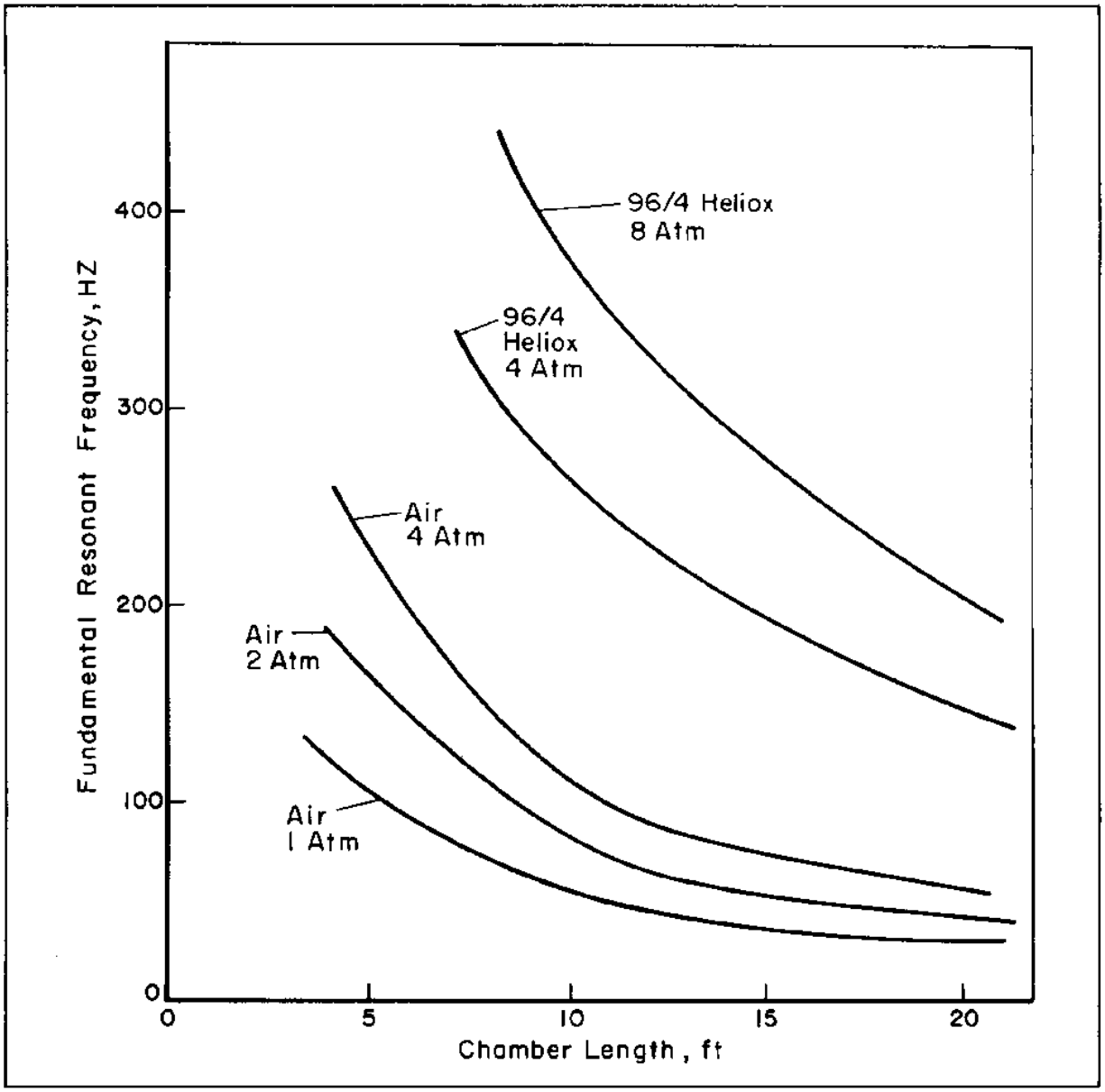

FIGURE 10-1
Fundamental Lengthwise Resonant Frequencies for Various Closed Chamber Lengths and Pressures, for Air and Helium/Oxygen Atmospheres

Various Closed Chamber Lengths and Pressures, for Air and Helium/Oxygen Atmospheres]

If switches are to be used within the chamber environment, select and use only intrinsically safe switches which do not cause an arc when making or breaking contact.

All amplifiers, switching units, and volume controls will be outside the chamber. Amplifiers should be selected so as to normally operate using 110 VAC and alternately capable of working on the emergency power.

5. EXAMPLE INSTALLATION. A simple audio system installation is shown schematically in Figure 10-2. The system is arranged with independent sending and receiving channels for continuous two-way communication. As an alternative, "press to talk" switching can be adopted with some economy in wiring and amplifier requirements. If switching is used, it is essential that the occupant-to-outside channel always be open when all switches are released. Telephone-type transceivers can be substituted for one or more of the headsets. A tape recorder can be provided to record crew-to-monitor conversations, if desired. The system as shown will not function as an intercom for the crew, but can be modified to do so. Crew members wearing the headsets will have artificially improved acoustics in that they will be isolated from chamber echoes.

Section 2. VIDEO COMMUNICATIONS

1. VIDEO COMMUNICATIONS. The provision of flexible, remote, visual monitoring by means of closed-circuit television adds one of the most valuable tools in the safe monitoring of chamber occupants and can add considerably to the efficiency of chamber operations. It also provides a basis for maintaining a visual record of experiments on videotape at an average cost far below film recording. This section covers some aspects of video communications useful as background information for the hyperbaric chamber designer.

2. VIDEO COMMUNICATION AS A SUPPLEMENT TO DIRECT OBSERVATION. Video communication should not be considered a total replacement for viewports. Viewports are a necessity because of their nearly 100 percent reliability and inherent ability to permit stereoscopic, high-resolution viewing in perfect color. It is also psychologically desirable to give the chamber crew a direct window to the outside world. Television communication does, however, offer several advantages for long-term observation tasks:

a. The chamber can be observed by several people located at a control console remote from the chamber itself.

b. By use of 300 M and wide angle lenses and an interior panning camera, a greater variety of observations can be performed than would be possible through a viewport.

c. Long-term observation can be made with less fatigue to the monitoring personnel.

d. Both visual and voice monitoring can be performed at a common location adjacent to the chamber operating controls.

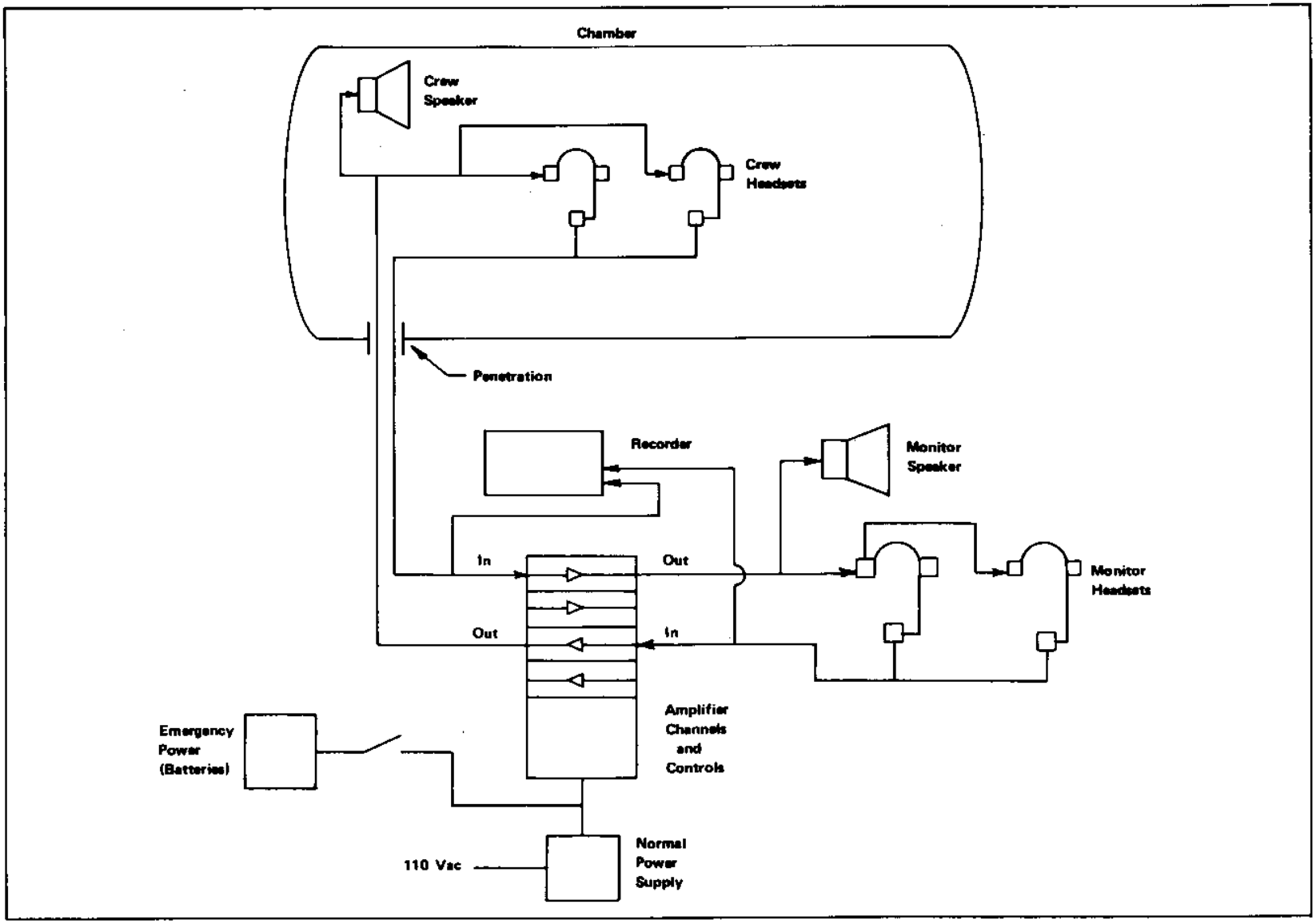

FIGURE 10-2
Example of Audio System

3. CAMERA STYLES AND SELECTION. Historically, video cameras have been mounted outside of the pressure chamber looking through viewports. Cameras have also been designed to be installed within pressure housings and placed within the chamber compartments. These cameras have not been successful because of helium leakage into the videocon. The exception to this is when the camera is placed underwater. Because video cameras are normally observing a single spot, an image can burn in the videocon. After the image is burned into the videocon, the actual occurrences are masked and the occupants cannot be observed. To prevent this burn, a camera equipped with a silicon diode videocon is the only approved type for use in chamber operations.

4. CAMERA LOCATIONS. The prime location for externally mounted cameras is through viewports. Caution should be taken not to face cameras directly into a chamber light or a highly reflected light. The viewport selected for the camera for best overall chamber observation should be high and unobstructed by chamber appurtenance such as bunks or shower curtains. If a new chamber is being designed, a camera port as shown in Figure 10-3 should be considered, located at the end, high and at a 45 deg. angle from the deck plates. This will provide the overall best image of the entire chamber.

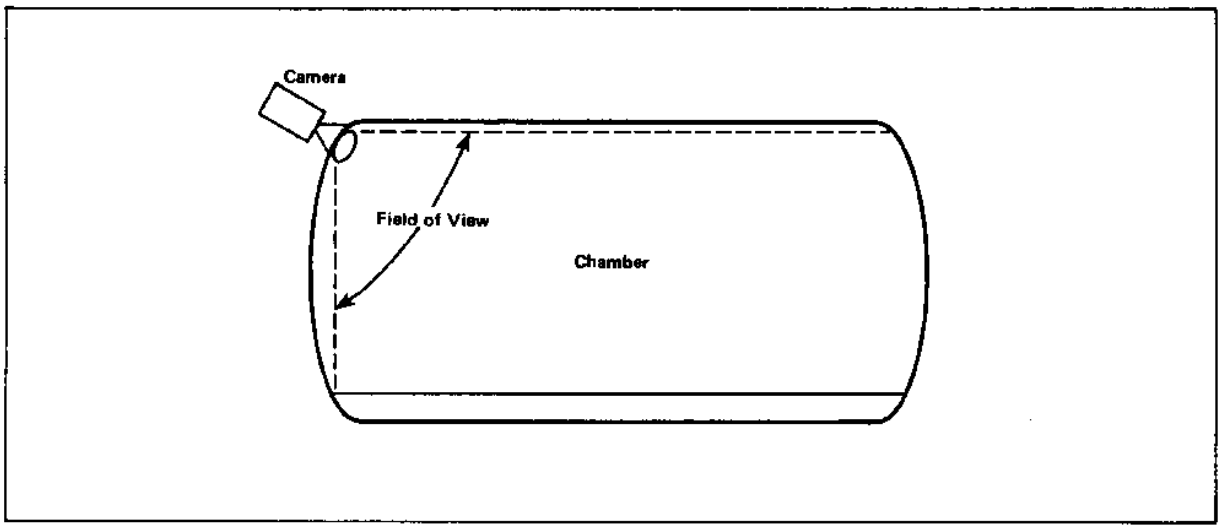

FIGURE 10-3
Camera Location

5. LENS SELECTION AND FIELD OF VIEW. The need for auxiliary lenses on TV cameras, whether internally or externally mounted, will be governed partially by the chamber geometry. A long, narrow chamber is more difficult to cover with a single lens and may require more than one camera as well. Lenses with effective focal lengths which are equal to or smaller than the image tube breadth can cover a wide area with small magnification and are called normal lenses. Lenses with effective focal lengths considerably greater than the image tube diameter cover a small field with high magnification, that is, a telescopic effect, and are called telephoto lenses. Extreme wide-angle coverage can be obtained by use of special lenses, but usually with noticeable

distortion. Coverage of 180 deg. or more is possible, The standard aspect ratio, or width-to-height ratio, for television pictures is four to three. Smooth transition from wide angle to telephoto characteristics can be obtained from zoom lenses, which change effective focal length in response to the actuation of a single mechanical control. A good quality zoom lens may have a zoom ratio, or apparent magnification range of 8 to 1 or more.

6. LIGHTING REQUIREMENTS. Improvements in television camera sensitivities have reached the point where lighting requirements are no longer critical for utilitarian, as opposed to artistic, applications. Illumination which is satisfactory for the chamber crew will generally also be sufficient for video communications. Low-light-level cameras with automatic light compensation are available at moderate cost.

7. VIDEO RECORDERS. Compact, relatively inexpensive video tape recorders have become available from several manufacturers. Typical recorders are portable VHS units with 6-hour programming available on a single video cassette.

CHAPTER 11. CHAMBER OPERATING CONTROL SYSTEMS

1. SCOPE. This chapter presents criteria for the design, fabrication, and protection of the hyperbaric facility control system. Performance of the facility in providing the required environment in the chamber throughout the mission is dependent upon the correct and timely operation of the chamber indicators and controls in the control system. Generally, a mission will require many hours or weeks of continuous duty of operators at the control system to perform assigned tasks. Consequently, the control system design should provide for operator work requirements which foster effective procedures, work patterns, personnel safety and health, and which minimize discomfort, distraction, and any other factors which degrade human performance or increase error. This will be accomplished by applying human engineering design criteria, principles, and practices in the design of the control system. Appropriate human engineering information is contained in MIL-STD-1472, Human Engineering Design Criteria for Military Systems, Equipment, and Facilities (see Reference (1)), Van Cott, H.P., and Kinkade, R.G., Human Engineering Guide to Equipment Design, (see Reference (2)), and Woodson, W.E., and Conover, D.W., Human Engineering Guide for Equipment Designers (see Reference (3)). Figures 11-1 and 11-2 illustrate human engineering information available to the designer.

Section 1. OPERATING CONTROL SYSTEM TYPES

1. CHAMBER CONTROL SYSTEM TYPES. The control system for the chamber may be the manual type, the automatic computer operated type, or a combination automatic and manual type. The type of control system is determined by the purpose and duration of the expected missions.

2. MANUAL CONTROL SYSTEM. The manual control system is generally used on relatively short-duration missions and on missions requiring numerous alterations of the in-chamber environment during the missions. The recompression chamber is generally operated by manual controls.

3. AUTOMATIC COMPUTER-OPERATED CONTROL SYSTEM. The automatic computer-operated control system takes readings, makes comparisons, and makes corrections in fractions of a second throughout the mission. The large memory storage and direct interaction of a mainframe computer make it the unit of choice. A microprocessor can be programmed to do the same job at a smaller cost. Saturation hyperbaric chambers are generally operated by automatic computer-operated controls. The control system should permit the operator to override the automatic controls when necessary.

4. COMBINATION AUTOMATIC-MANUAL CONTROL SYSTEM. A combination automatic-manual control system may be used on all chambers in hyperbaric facilities as it provides pre-programmed automatic control, allows operators to monitor the indicators and controls, permits the operators to override the automatic controls to make corrections as necessary, and permits complete manual operation with the computer shut down.

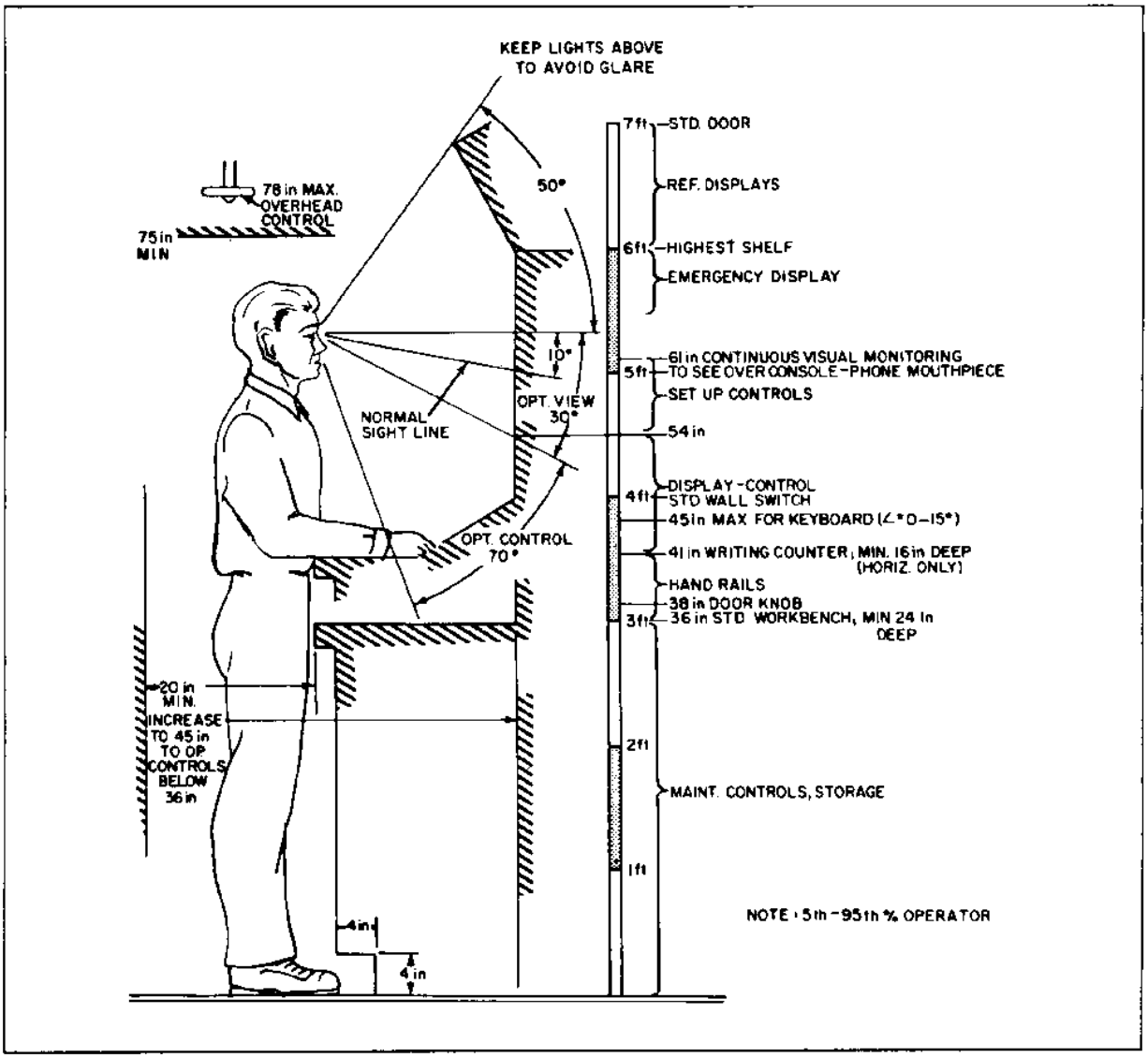

FIGURE 11-2.
Suggested Parameters for Mockup of Standing Operator Workplaces

Section 2. CONTROL PANEL DESIGN

1. CONTROL PANEL DESIGN. The control panels should be located near the hyperbaric chambers preferably in a single room adjacent to and with a view of the chambers in the complex. The outside of the chambers should be visible to each member of the operating staff while they are seated at their stations at the control panel. The control panel shall have stations or positions for each member of the operating staff in line of authority: diving officer, diving supervisor, chamber operators, gas analysis operators, electrical/communications operator, life support operator, gas system operator, and a computer operator when a computer is used.

2. CONSOLES. The consoles should provide each operating staff with desk space, convenient indicators and controls, and a chair for many hours of monitoring the system operations, making corrections and taking emergency action if required in the assigned functional areas. Consoles should be in a light restful color. Digital readout, lights, and pushbutton indicators and controls should be laid out in logical order on the console panel with graphics to show their relationship, such as type of gas, direction of flow, pressure, rate of flow, and temperature. Primary or normal controls should be clearly identified and secondary or backup controls and their use in an emergency should be distinctly identified. The back of the control panel should be easily accessible through rear doors for maintenance and service. Schematic and component location diagrams should be installed on the inside of rear doors for use in identifying each component as to function, relationship, and physical location. Adequate lighting when rear doors are open for service should be provided.

REFERENCES

1. MIL-STD-1472, Human Engineering Design Criteria for Military Systems, Equipment, and Facilities.

2. Van Cott, H.P., and Kinkade, R.G., Human Engineering Guide to Equipment Design (1972) Superintendent of Documents, U.S. Government Printing Office, Washington, D.C. 20420.

3. Woodson, W.E., and Conover, D.W., Human Engineering Guide for Equipment Designers (1964) University of California Press, Berkeley, Los Angeles.

CHAPTER 12. LUBRICANTS, SEALANTS, AND CLEANING PROCEDURES FOR HYPERBARIC SYSTEMS

1. SCOPE. This chapter provides information in Section 1 for use in selecting lubricants and sealants and in Section 2 for use in selecting the cleaning method and procedures to be used in the hyperbaric systems to maintain the Navy standards.

Section 1. LUBRICANTS AND SEALANTS

1. LUBRICANTS AND SEALANTS. A limited number of the many lubricants and sealants which may be used in hyperbaric systems are listed in Tables 12-1 through 12-6. Conventional readily available lubricants and sealants are almost always based on various forms of hydrocarbon products. However, in the high pressure air or oxygen environments of hyperbaric systems, hydrocarbon products present very serious fire hazards.

The needs of the chemical industry, medical research, the diving industry, and the space program have prompted manufacturers to develop many lubricants and sealants which are safe for use in high oxygen environments. Although a wide range of acceptable, safe products with very useful special properties are available, these products are sometimes difficult to locate unless the manufacturers and the trade names are known. These lists should aid the designer, fabricator, and user of hyperbaric systems in selecting and obtaining products which meet their requirements.

This information was obtained from Government reports, military specifications, qualified products lists, and commercial suppliers.

TABLE 12-1
Lubricants — Oils

MATERIAL	MANUFACTURER OR SOURCE	COMPOSITION
FLUOROLUBE FS-5	HOOKER CHEMICAL CO.	CHLOROFLUOROCARBON
FLUOROLUBE T-45	HOOKER CHEMICAL CO.	CHLOROFLUOROCARBON
FLUOROLUBE T-80	HOOKER CHEMICAL CO.	CHLOROFLUOROCARBON
FLUOROLUBE HO-125	HOOKER CHEMICAL CO.	CHLOROFLUOROCARBON
FLUOROLUBE MO-10	HOOKER CHEMICAL CO.	CHLOROFLUOROCARBON
FLUOROCARBON LUBRICANT 95-1	DIXON CORP.	FLUOROCARBON; TEFLON FILLED
FLUORO-SHEM AJ 369 (OIL)	HALOCARBON PRODUCTS CORP.	CHLOROFLUOROCARBON
FLUOROCHEMICAL FC-75	MINNESOTA MINING & MFG. CO.	—
FLUOROCHEMICAL FC-101	MINNESOTA MINING & MFG. CO.	—
FLUOROCHEMICAL FC-43	MINNESOTA MINING & MFG. CO.	HEPTACOSAFLUOROTRIBUTYLAMINE
CHRYSLER-CHAPMAN PROCESSED OIL	CHRYSLER CORPORATION	—
CTFE POLYMER OIL	HAUSER RESEARCH & ENG. CO.	—
HALOCARBON OIL SERIES 4-11FS	HALOCARBON PRODUCTS CORP.	CHLOROFLUOROCARBON
HALOCARBON OIL SERIES 2.3/100	HALOCARBON PRODUCTS CORP.	CHLOROFLUOROCARBON
HALOCARBON OIL SERIES 10-25	HALOCARBON PRODUCTS CORP.	CHLOROFLUOROCARBON
HALOCARBON OIL SERIES 10-25E	HALOCARBON PRODUCTS CORP.	CHLOROFLUOROCARBON
FLUOROSILICONE FLUID NO. 4	DOW CORNING CORP.	FLUOROSILICONE
FLUOROSILICONE FLUID NO. 7	DOW CORNING CORP.	FLUOROSILICONE
FS-1265, LOT 49	DOW CORNING CORP.	FLUOROSILICONE
FS-1265, LOT E 32262N	DOW CORNING CORP.	FLUOROSILICONE
KEL-F-POLYMER OIL KF-10	MINNESOTA MINING & MFG. CO.	CHLOROFLUOROCARBON
KEL-F OIL NO. 1	MINNESOTA MINING & MFG. CO.	CHLOROFLUOROCARBON
KRYTOX 143 AA OIL	E. I. du PONT de NEMOURS & CO.	FLUOROCARBON
KRYTOX 143 AB OIL	E. I. du PONT de NEMOURS & CO.	FLUOROCARBON
PR-143 AB OIL	E. I. du PONT de NEMOURS & CO.	FLUOROCARBON
PR-143 AC OIL	E. I. du PONT de NEMOURS & CO.	FLUOROCARBON
P.D. 787	FRANKFORD ARSENAL	POLYTETRAFLUOROETHYLENE
P.D. 789	FRANKFORD ARSENAL	PERFLUOROTRIALKYLAMINES
P.D. 816	FRANKFORD ARSENAL	FLUORINATED AMINE OIL
P.D. 817	FRANKFORD ARSENAL	FLUORINATED OIL
McLUBE 99	McGEE CHEMICAL CO.	—
McLUBE 2010	McGEE CHEMICAL CO.	MOLYDISULFIDE WITH GRAPHITE & FLUOROLUBE
OIL-ES-OIL	AMERICAN DURAFILM CO.	TEFLON
ORLOX 200P	BEL-RAY CO. INC.	AROCLOR, GRAPHITE & MOLYDISULFIDE
ORLOX 500C	BEL-RAY CO. INC.	FLUOROLUBE, GRAPHITE & MOLYDISULFIDE

TABLE 12-2
Lubricants — Greases

MATERIAL	MANUFACTURER OR SOURCE	COMPOSITION
PR-240 AB GREASE	E. I. du PONT de NEMOURS & CO.	FLUOROCARBON
PR-240 AC GREASE	E. I. du PONT de NEMOURS & CO.	FLUOROCARBON
KRYTOX 240 AB GREASE	E. I. du PONT de NEMOURS & CO.	FLUOROCARBON
KRYTOX 240 AC GREASE	E. I. du PONT de NEMOURS & CO.	FLUOROCARBON
HALOCARBON GREASE 25-20MZ	HALOCARBON PRODUCTS CORP.	CHLOROFLUOROCARBON
HALOCARBON GREASE 25-10MZ	HALOCARBON PRODUCTS CORP.	CHLOROFLUOROCARBON
HALOCARBON GREASE 25-20M-5A	HALOCARBON PRODUCTS CORP.	CHLOROFLUOROCARBON WITH BARIUM SULFONATE INHIBITOR
FLUOROLUBE GREASE GR-544	HOOKER CHEMICAL CO.	CHLOROFLUOROCARBON
FLUOROLUBE LG	HOOKER CHEMICAL CO.	CHLOROFLUOROCARBON
FLUOROLUBE GREASE GR-362	HOOKER CHEMICAL CO.	CHLOROFLUOROCARBON
ML-554 GREASE	KENNEDY SPACE CENTER	—
P.D. 856 GREASE	FRANKFORD ARSENAL	—
BELCO 1245 GREASE	BEL-RAY CORPORATION	POLYMERS OF TRIFLUOROVINYL CHLORIDE

TABLE 12-2 (Continued)

MATERIAL	MANUFACTURER OR SOURCE	COMPOSITION
BELCO 1260 GREASE	BEL-RAY CORPORATION	POLYMERS OF TRIFLUOROVINYL CHLORIDE
FX 46 GREASE (LOT 1)	MINNESOTA MINING & MFG. CO.	—
KEL-F-90 GREASE	MINNESOTA MINING & MFG. CO.	CHLOROFLUOROCARBON
KEL-F GREASE	MINNESOTA MINING & MFG. CO.	CHLOROFLUOROCARBON
KEL-F-10-200 WAX	MINNESOTA MINING & MFG. CO.	CHLOROFLUOROCARBON

TABLE 12-3
Lubricants — Dry Films

MATERIAL	MANUFACTURER OR SOURCE	COMPOSITION
ELECTROFILM 1005	ELECTROFILM INC.	CERAMIC-BONDED MOLYDISULFIDE SOLID FILM LUB.
ELECTROFILM LUBE-LOK 2306	ELECTROFILM INC.	INORGANIC BONDED MOLYDISULFIDE
ELECTROFILM LUBE-LOK 2396	ELECTROFILM INC.	MOLYDISULFIDE & GRAPHITE WITH SODIUM SILICATE
McLUBE 2023	McGEE CHEMICAL CO.	MOLYDISULFIDE WITH GRAPHITE & FLUOROLUBE
MIDWEST RESEARCH INST. DRY FILM LUBRICANT	MIDWEST RESEARCH INSTITUTE	MOLYDISULFIDE GRAPHITE & BISMUTH IN SODIUM SILICATE
CBS DRY FILM LUB 5940	COLUMBIA BROADCASTING CO.	COPPER, SILVER AND MOLYDISULFIDE
CBS DRY FILM LUB CLD 5940	COLUMBIA BROADCASTING CO.	COPPER, SILVER AND MOLYDISULFIDE
DAG DISPERSION 155	ACHESON COLLOIDS CO.	COLLOIDAL GRAPHITE & TRICLENED
DAG DISPERSION 211	ACHESON COLLOIDS CO.	COLLOIDAL MOLYDISULFIDE IN TRICHLOROETHYLENE
DESCO FORMULATION TF-48	DELTA-DESCO CO.	FLUOROCARBON BASE
DOW, CORNING E-4-3112 (LOT B-1723-41)	DOW CORNING CORP.	FLUOROSILICONE
DRILUBE 701 (OXYLUBE)	V01-SHAN MFG. CO.	—
DRILUBE 701 (OXYLUBE)	DRILUBE CO.	MOLYDISULFIDE IN ETHYL ALCOHOL & ETHYL ACETATE
DRILUBE 702 (OXYLUBE)	DRILUBE CO.	MOLYDISULFIDE IN CHROMOUS AND PHOSPHORIC ACID
ELECTRO-MOLY POWDER GRADE 1	ELECTROFILM INC.	MOLYBDENUM DISULPHIDE SOLID LUBRICANT
EVERLUBE DRY FILM LUBE 811	EVERLUBE CORP.	MOLYDISULPHIDE & SODIUM SILICATE BINDER
MICRO-SEAL DRY FILM LUB. 100-1	MICROSEAL PRODUCTS CO.	—
MOLYKOTE Z (MIL-M-7866A)	ALPHA MOLYKOTE CORP.	MOLYDISULFIDE
MOLY SPRAY KOTE LUB #2	ALPHA MOLYKOTE CORP.	MOLYDISULFIDE
MLF-Z DRY FILM LUBRICANT	MIDWEST RESEARCH INSTITUTE	POLYMIDE BONDED DRY FILM
MOLD RELEASE LUB S-122	MILLER-STEPHENSON CO.	—
MOLYLUBE SPRAY DRY POWER	BEL-RAY CO. INC.	MOLYDISULFIDE IN SPRAY
RULON SPRAY	DIXON CORP.	—
R&R TEFLON LUB. #30	IDEAL DESIGN CO.	—

TABLE 12-4
Gaskets, Packing, and Bearings

MATERIAL	MANUFACTURER OR SOURCE	COMPOSITION
ACCOPAC NO. 812	ARMSTRONG CORK CO.	TEFLON & ASBESTOS
ACCOPAC NO. 816	ARMSTRONG CORK CO.	TEFLON & ASBESTOS
ACPAX 500	ALLPAX COMPANY	STRYENE-BUTADIENE COPOLYMER WITH ASBESTOS FIBER

TABLE 12-4 (Continued)

MATERIAL	MANUFACTURER OR SOURCE	COMPOSITION
ALPAX 500 GASKET	CHEMISTRY BRANCH	FLUOROLUBE TREATED
ANKORITE 425	ANCHOR PACKING CO.	ASBESTOS-RUBBER
ANNIN VALVE PACKING	ANNIN VALVE CO.	TEFLON/FIBERGLASS
ARMALON 97-001	E.I. du PONT de NEMOURS & CO.	TEFLON TFE & FEP FILM
ARMALON	E.I. du PONT de NEMOURS & CO.	FLUOROCARBON FELT (BLEACHED SHEET)
EXTRUDED CRYAL "M"	JOHNS-MANVILLE	FILLED TEFLON
DUROID SHEET 3400	ROGERS CORP.	VITON A & ASBESTOS FIBERS
DUROID SHEET 5600	ROGERS CORP.	TEFLON & CERAMIC FIBERS
GARLOCK 5875	GARLOCK PACKING CO.	TEFLON & ASBESTOS
GARLOCK 8573	GARLOCK PACKING CO.	GLASS FILLED TEFLON
FLEXROCK TYPE 420 PACKING	FLEXROCK CO.	BRAIDED TEFLON
FLEXITALLIC GASKET	FLEXITALLIC GASKET CO.	TEFLON & STAINLESS STEEL
FLUOROBESTOS LS-7598	RAYBESTOS-MANHATTAN INC.	TEFLON & ASBESTOS
FLUOROBESTOS UNSINTERED	RAYBESTOS-MANHATTAN INC.	TEFLON & ASBESTOS
FLUOROBLUE SHEET	JOHN L. DORE CO.	TEFLON
GYLON S-50-S	GARLOCK PACKING CO.	TEFLON
JOHN CRANE STYLE C-30	CRANE PACKING CO.	BRAIDED TEFLON
JOHN CRANE STYLE C-94	CRANE PACKING CO.	ASBESTOS LUBRICATED WITH TEFLON
JOHN CRANE STYLE 17717	CRANE PACKING CO.	ASBESTOS OVER GRAPHITED ASBESTOS
JOHNS-MANVILLE NO. 76	JOHNS-MANVILLE CO.	COMPRESSED ASBESTOS
JOHNS-MANVILLE LO-FLO	JOHNS-MANVILLE CO.	TEFLON REINFORCED WITH GLASS
JOHNS-MANVILLE MX-3681	JOHNS-MANVILLE CO.	COMPRESSED ASBESTOS
KEL-F ELASTOMER	ARROWHEAD PRODUCTS	
KEL-F LIP SEAL	W.S. SHAMBLEE CO.	
NARMCO SEAL	NARMCO R&D CO.	TFE-FEP
FLEXONIC BEARING (PN 6080-295-60)	GARLOCK PACKING CO.	LEAD IMPREGNATED TEFLON WITH COPPER BACKING
DU METAL	GARLOCK PACKING CO.	TEFLON AND SINTERED METAL
GARLOCK BEARING MATERIAL (WITH TEFLON & LEAD REMOVED)	GARLOCK PACKING CO.	--
GARLOCK DU METAL (WITH BRASS BACKING)	GARLOCK PACKING CO.	TEFLON & SINTERED METAL
GOOP-HIGH PURITY SWAG LOCK THREAD LUB ANTISEIZE COMPOUND	CRAWFORD FITTING CO.	CHLOROFLUOROCARBON WITH TEFLON

TABLE 12-5
Thread Sealants and Lubricants

MATERIAL	MANUFACTURER OR SOURCE	COMPOSITION
ALL-PURPOSE TAPE-UNYTE	J.C. WHITLAM MFG. CO.	--
ANDEROL 1333	LEHIGH CHEMICAL CO.	ANTIMONY COMPOUND IN FLUORO-SILICONE FLUID REMARKS: CORROSIVE TO ALUMINUM
ANTI-SEIZE COMPOUND 32Z	MSFC MATERIALS DIV.	--
AR-1F	MSFC MATERIALS DIV.	AROCHLOR 1254 & GRAPHITE
AR-1F	HAYES AIRCRAFT CORP.	AROCHLOR 1254 & GRAPHITE
BLUE GOOP THREAD LUB.	CRANFORD FITTING CO.	CHLOROFLUOROCARBON OIL
CONLEY TEFLON PASTE	CONLEY CORP.	TETRAFLUOROETHYLENE
DAG DISPERSION 1730	ACHESON COLLOIDS CO.	AROCHLOR 1254 & GRAPHITE
EASY WRAP PIPE JOINT TAPE	J.A. SEXAVER MFG. CO.	TEFLON
FLUOROSEAL	IND. PLASTIC FABCTRS. INC.	TEFLON & AMMONIA
LIQUID O-RING NO. 1235	OIL CENTER RESEARCH	--
SAUEREISEN NO. 51	SAUEREISEN CEMENTS CO.	--
SEXAVER "EASY WRAP PIPE JOINT TAPE"	J.A. SEXAVER MFG. CO.	TEFLON

TABLE 12-5 (Continued)

MATERIAL	MANUFACTURER OR SOURCE	COMPOSITION
SODIUM SILICATE & GRAPHITE	MSFC MATERIALS DIV.	--
SODIUM SILICATE & TALC	MSFC MATERIALS DIV.	--
TAPE TITE	BLUE SEAL CHEM. CO.	SINTERED TEFLON
TEFLON THREAD SEAL TAPE 121	DODGE FIBERS CORP.	SINTERED TEFLON
TEFLON THREAD SEALANT S-22	SAUNDERS ENG. CO.	SINTERED TEFLON
T-FILM THREAD COMPOUND	ECO-ENGINEERING CO.	--
TFE FLUOROCARBON THREAD SEALING TAPE	RAYBESTOS-MANHATTAN CO.	TFE TEFLON
UNIVERSAL THREAD SEAL TEFLON RIBBON	W.S. SHAMBAN & CO.	TEFLON
X-PANDO	X-PANDO CORP.	SILICATE CEMENT

TABLE 12-6
Adhesives, Plastics and Elastomers

MATERIAL	MANUFACTURER OR SOURCE	COMPOSITION
ACLAR TYPE 191 (MIL-F-22191)	ALLIED CHEMICAL CO.	CHLOROFLUOROCARBON
AERO QUIP ORANGE	AEROQUIP CORP.	TEFLON
ARMALON PDX 7700B	DuPONT	TEFLON FELT
BEN-HAR LACING TAPE	BENTLY HARRIS MGF. CO.	--
BLASTAPE MX4647	JOHNS-MANVILLE CO.	
CRYSTAL M INORGANIC PAPER	MINNESOTA MINING & MFG. CO.	--
DODGE FIBERS LACING TAPE	DODGE FIBERS CORP.	TEFLON
DuPONT H. FILM	E. I. du PONT de NEMOURS & CO.	--
DuPONT NO. 97-001A	E. I. du PONT de NEMOURS & CO.	TFE METALIZED WITH ALUMINUM
FLUOROFLEX-T-EXTRUDED HOSE	RESISTOFLEX CORP.	TEFLON & CARBON BLACK
FLUOROGLASS E-775-303	JOHN L. DORE CO.	TEFLON & GLASS
FLUOREL ELASTOMER O-RING	SEAC EASTERN CO.	
FLUOREL-ELASTOMER	MINNESOTA MINING & MTG. CO.	CHLOROFLUORO-CARBON
GARLOCK 8573 (LOT 65)	AEROSPACE MECH. EQUIP. INC.	FILLED TEFLON
G.E. FORMULATION III	G.E. COMPANY	POTTING COMPOUND
HALON TFE	ALLIED CHEMICAL CO.	--
H CEMENT	W.T. BEAM	--
H-FILM 380-2-2	DuPONT	--
KEL-F (PLASTICIZED)	3M COMPANY	POLYTRIFLUOROCHLOROETHYLENE
KEL-F (UNPLASTICIZED)	3M COMPANY	POLYTRIFLUOROCHLOROETHYLENE
KEL-F-PLASTIC	CADILLAC PLASTIC CO.	--
KEL-F 800 PLASTIC	3M COMPANY	POLYTRIFLUOROCHLOROETHYLENE
KEL-F PRIMER 640	3M COMPANY	POLYTRIFLUOROCHLOROETHYLENE
RT/DUROID 5870	ROGERS CORP.	--
RULON A LOT PA-2	DIXON CORP	--
SAUEREISEN LOW EXPANSION CEMENT	SAUEREISEN CEMENT CO.	ZIRCONIUM BASE
SCOTCH PLASTIC FILM	3M COMPANY	TEFLON
SP-1 UNFILLED POLYMER SP	E.I. du PONT de NEMOURS & CO.	POLYIMIDE
TEFLON TFE	E.I. du PONT de NEMOURS & CO.	POLYTETRAFLUOROETHYLENE
TEFLON 5% TFE DISPERSION	DOW CORNING CO.	POLYTETRAFLUOROETHYLENE
TEFLON XA102A522	GOODYEAR CO.	POLYTETRAFLUOROETHYLENE
TEFLON FEP	E.I. du PONT de NEMOURS & CO.	FLUORINATED ETHYLENE PROPYLENE POLYMER
VITON	AEROQUIP CORP.	
VITON	I.B. MOORE CO.	
VITON	PRECISION RUBBER	
VITON	B.H. HADLEY, INC.	
VITON	PARKER	
VITON	PRECISION RUBBER PROD.	
VINYLLOYD NO. 5909	VINYLLOYD CO.	CHLOROFLUOROCARBON
VELCRO HI GRADE	VELCRO CORP.	

Section 2. CLEANING PROCEDURES

1. CLEANING PROCEDURES. There is considerable controversy about the proper procedures for cleaning hyperbaric installations and their piping systems. In addition to the basic esthetic and practical need for a clean working environment, there are two main reasons for cleaning hyperbaric systems. The first is to provide a life supporting, non-toxic atmosphere for the chamber occupants and the second is to remove all traces of combustible material, with special emphasis on the removal of hydrocarbons from all systems which will contain high concentrations of oxygen. Extreme cleanliness in oxygen systems is necessary because experience has shown that even slight traces of hydrocarbons can result in a very destructive fire or an explosion. Both needs are equally important and are met by proper cleaning of the breathing gas system and the piping and gas storage systems of the hyperbaric chamber air system.

2. BREATHING GAS SYSTEM. The procedures for cleaning a system for safe breathing gas are vastly different from procedures for cleaning an oxygen system. A lack of understanding of this difference in required cleaning procedures has frequently resulted in a considerable waste of time, manpower, and money.

When a breathing gas system is being cleaned, bear in mind that the method of cleaning must not damage the cleaned system and the gas coming from the cleaned system must conform to the current U.S. Navy Diving Manual, NAVSEA 0994-LP-001-9012, (see Reference (1)) standard for breathing air quality, as listed in Table 12-7.

TABLE 12-7
Standard for Divers Breathing Air

Oxygen	20 to 22% by volume
Carbon Dioxide	1,000 ppm max. (0.05% by vol.)
Carbon Monoxide	20 ppm max.
Oil Mist & Vapor	5 mg/m└3┘ max.
Total Hydrocarbons (expressed as methane but excluding methane)	25 ppm
Odor	Not objectionable
Particulates	Not detectable except as noted above under oil mist & vapor

In addition to the specifics of Table 12-7, Table 12-8, from NAVSHIPS 0938-011-4010, Nuclear Powered Submarine Atmosphere Control (see Reference (2)), lists about 40 items for which concentration limits have been established and which might possibly be present in a breathing gas system. To insure an acceptable level of compressed breathing air for divers, the Navy has established by NAVSEA NOTICE 9597 of 27 May 1977 a semiannual sampling program. For further information about this program, contact the Naval Air Test Center Program at the Naval Coastal Systems Center, Panama City, Florida, phone (904) 234-4482.

TABLE 12-8
Limits for Atmospheric Constituents
(Limits in ppm by Volume Unless Otherwise Noted)
(Ref: Nuclear Powered Submarine Atmosphere Control (NAVSHIPS 0938-011-4010))

Chemical Substance	90-Day Limit	24-Hour Limit	1-Hour Emergency Limit	Remarks
1. Acetone	300	2000	*	
2. Acetylene	6000	6000	6000	Set at approximately 1/4 of lower exposure limit of 2 1/2%.
3. Acrolein**	0.1	0.1	0.2	
4. Ammonia	25	50	400	
5. Arsine	0.01	0.1	1.0	
6. Benzene	1.0	100	*	See item 15 (a).
7. Carbon dioxide (Notes 1 and 2)	3.8 mm Hg (1/2%)	7.6 mm Hg (1%)	19 mm Hg (2 1/2%)	See Table 12-9 for saturation systems.
8. Carbon monoxide	15	200	200	See Table 12-9 for saturation systems.
9. Chlorine	0.1	1.0	3.0	
10. Dichlorodifluoromethane (Refrigerant R-12)	200	1000	2000	Based on decomposition in $CO\text{-}H_2$ burner.
11. Dichlorotetrafluoroethane (Refrigerant R-114)	200	1000	2000	Based on decomposition in $CO\text{-}H_2$ burner.
12. Ethanol	100	500	*	
13. Formaldehyde**	0.5	1	3	
14. Freon refrigerants				See items 10, 11, 39, 40.
15. Hydrocarbons				Principal sources include paint thinner, lighter fluid, mineral spirits, etc. Equivalent concentrations in ppm are listed under item 6.
(a) Benzene	3 mg/m^3	300 mg/m^3	*	
(b) Total Aromatics (less benzene)	10 mg/m^3	*	*	
(c) Total Aliphatics (less methane)	60 mg/m^3	*	*	
16. Hydrogen (note 3)	10,000 (1%)	10,000 (1%)	10,000 (1%)	
17. Hydrogen chloride	1.0	4.0	10	
18. Hydrogen fluoride	0.1	1.0	8	
19. Hydrogen sulfide	1	10	50	
20. Isopropanol	50	200	400	
21. Mercury	0.01 mg/m^3	2.0 mg/m^3	*	
22. Methane	13,000	13,000	13,000	Set at approximately 1/4 lower explosive limit of 5.3%. See Table 12-9 for saturation systems.
23. Methanol	10	200	1,000	Based on decomposition in $CO\text{-}H_2$ burner. See Table 12-9 for saturation systems.
24. Methylchloroform	2.5	10	25	Based on decomposition in $CO\text{-}H_2$ burner.
25. Methylisobutylkeytone	5	*	*	
26. Monoethanolamine (MEA)	0.5	3.0	50	
27. Nitrogen dioxide	0.5	1.0	10	
28. Oxygen	140-180 mm Hg not exceeding 24% by volume	140-180 mm Hg not exceeding 24% by volume	*	Physiological lower limit. Fire safety upper limit.
29. Ozone	0.02	0.1	1.0	
30. Paint thinner	—	—	—	See hydrocarbon solvents, item 15.
31. Phosgene	0.05	0.1	1.0	
32. Phosphine	*	*	*	
33. Stibine	0.01	0.05	1.0	
34. Sulfur dioxide	1.0	5.0	10	
35. Toluene	1	*	*	
36. Triaryl phosphate	1.0 mg/m^3	50 mg/m^3	*	
37. 1, 1, 1 Trichloroethane				See item 24.
38. Trichloroethylene	Less than 0.1 ppm	*	*	

TABLE 12-8 (Continued)

Chemical Substance	90-Day Limit	24-Hour Limit	1-Hour Emergency Limit	Remarks
39. Trichloromonofluoromethane (Refrigerant R-11)	5	20	50	
40. Vinylidene chloride	2.0	10	25	
41. Trichlorotrifloroethane (Freon 113)	10 ppm	*	*	

*Limit has not been established.
**Tentative values established pending development of additional research data.

Notes:
1. The 90-day limit for carbon dioxide is an average reading. Levels are not to exceed a maximum of 1 percent, tactical situation permitting.
2. The 90-day limit for Trident and later class submarines is 0.5 percent maximum.
3. During battery charges, the hydrogen limit shown above may be exceeded as discussed in Chapter 9623, NAVSHIPS Technical Manual 0901-623-0003.

Table 12-9
Maximum Concentration for Some Common Contaminants in Saturation Complex Atmospheres
(Surface equivalent values)

Carbon Dioxide	5000 ppm (3.8 mmHg) (.005 ATA)
Carbon Monoxide	10 ppm
Methane	1000 ppm
Methanol	200 ppm
Total Hydrocarbons (less Methane)	10 ppm
Benzene	1 ppm
Halogenated Hydrocarbons	1 ppm
Oil Mist	5 mg/m└3┘
Particulate Matter* (no oil mist present)	1 mg/m└3┘

*Particulate matter is measured concurrently with oil mist vapor. If under microscopic examination particles other than lint, steel particles, iron oxide or carbon particles are seen every effort should be

made to identify the solid if present in significant quantity. Once identified a determination as to whether or not a toxicity hazard exists should be made.

If no oil mist is present, 1 mg/m^3 is the maximum level. When sampling air, the total of oil mist and particulate together should be less than 5 mg/m^3.

The size of the particle matter should be compatible with engineering specifications for proper equipment operability and maintainability.

A slightly higher purity standard than that in Table 12-7 has been established for the atmosphere of a saturation diving complex. This requirement is presented in Table 12-9.

The most comprehensive list of contaminants which must be considered, if there is any possibility that they may be present, is contained in BUMED INSTRUCTION 6270.3, Exposure Limit Values for Health Hazardous Air Contaminants (see Reference (3)).

3. PIPING AND GAS STORAGE SYSTEMS. The procedures for cleaning piping and gas storage systems can be very simple such as continuous steam flushing for several hours, through flushing with hot water and a non-ionic household detergent or brush scrubbing with hot soapy water. These simple procedures are particularly applicable to conventional recompression chambers which do not go deeper than about 200 feet. These procedures can be used for deeper systems, bearing in mind that they must pass the final gas purity test. Systems can be flushed as a continuous circuit or taken apart and cleaned as separate pieces. After cleaning has been completed, the piping and gas storage systems must be thoroughly dried. This drying of a system is more difficult than it may appear because a piping system contains many small recesses in which liquids can be trapped and from which the drying takes place very slowly. In general, a recompression chamber can be dried in about 10 to 20 hours by a slow flow of warm, dry, clean air. If available, dry nitrogen can be used but it is no better than dry clean air. The drying can be speeded up by pulling a vacuum on the system and then gently warming the hardware with something like a hot air gun.

4. OXYGEN HIGH PRESSURE AND HIGH CONCENTRATION SYSTEMS. Cleaning systems which will contain oxygen under high pressure or in concentrations greater than 30 percent by volume is altogether different from cleaning a breathing air system. It is essential that all traces of combustible substances be removed from the oxygen system by one of the standardized methods of cleaning for oxygen service.

5. CLEANING STANDARDS AND SPECIFICATIONS. There are many standards and specifications which give very detailed procedures for cleaning and testing for cleanliness level of gas systems which are to be used for Naval breathing gas and oxygen piping. The fabricator and user are advised to critically select the method which will best meet the needs of his system. A few of the many standards and specifications are listed below:

BUSHIPS 9230.12 Oxygen and Nitrogen Piping Systems, Cleaning, and Inspection of

MIL-STD-767 Cleaning Requirements for Special Purpose Equipment, Including Piping Systems

MIL-STD-1246 Product Cleanliness Levels and Contamination Control Program

MIL-STD-1330 Cleaning and Testing of Oxygen and Nitrogen Gas Piping Systems

MIL-STD-1359 Cleaning Methods and Procedures for Breathing Oxygen Equipment

MIL-STD-1622 Cleaning of Shipboard Compress

MARE ISLAND NAVAL SHIPYARD Process Instruction 0516-839

CHARLESTON NAVAL SHIPYARD Process Instruction 0558-839-701

MIL-D-16791 Detergent, General Purpose (Liquid Non-Ionic).

Additionally, an excellent review of several cleaning methods is available in NAVMAT P-9290, System Certification Procedures and Criteria Manual for Deep Submergence Systems (see Reference (4)).

6. ACCEPTABLE CLEANING AGENTS. There are two principal cleaning agents which are used in most of the recommended practices.

a. Trisodium Phosphate. Trisodium phosphate is one of the best cleaning agents for through system flushing methods. Although it is very caustic in strong concentrations, it is readily removed from a system by a warm water flush and trace amounts which may remain in the system are not toxic and do not promote the development of any secondary toxic substances. BUSHIPS 9230.12 describes an approved procedure for using this agent.

b. Trichlorotrifluoroethane. It is suggested that MIL-STD-1330 be used as a general guideline for generating cleaning procedures in conjunction with this agent. It is a liquid at normal temperatures with a boiling point of 118 deg. F at one atmosphere. The agent itself is only slightly toxic at atmospheric pressures and does not have a deleterious effect on metal systems. This agent, however, in the presence of a CO-H┌2┐ burner does break down into hydrogen chloride (HCL) and hydrogen fluoride (HF) gas. The production of these two components would give rise to both a toxic problem and a corrosive problem in the concentration range of one ppm by volume. Another difficulty encountered is incompatibility with synthetic materials such as nylon, tygon, rubber, plastic, and other materials that may be used in a typical breathing gas system.

7. UNACCEPTABLE CLEANING AGENTS. Two materials, trichloroethylene and methyl chloroform, frequently used in cleaning operations, must not be used for cleaning breathing gas systems. They present a potential hazard in that a chemical reaction which yields dichloroacetylene occurs when they are passed through a moderately heated alkali (CO┌2┐ removal chemicals). Dichloroacetylene is an extremely toxic compound which must be excluded from closed atmospheres. Unfortunately, no analytical method is available for the direct analysis of dichloroacetylene in a complex atmospheric mixture at the required low levels of 1 ppm or less. Therefore, the use of substances which may develop dichloroacetylene must be avoided.

8. CLEANING DOCUMENTATION. As mentioned at the beginning of this chapter, any reasonable method may be used for cleaning a hyperbaric system provided it achieves the required level of cleanliness as proven by proper qualified testing methods. Whatever method is used, it should be in accordance with written procedures and all procedures and results must be recorded.

REFERENCES

1. NAVSEA 0994-LP-001-9012, U.S. Navy Diving Manual.

2. NAVSHIPS 0938-011-4010, Nuclear Powered Submarine Atmosphere Control.

3. BUMED INSTRUCTION 6270.3, Exposure Limit Values for Health Hazardous Air Contaminants.

4. NAVMAT P-9290, System Certification Procedures and Criteria Manual for Deep Submergence Systems.

INDEX

A

Acoustics, chamber, audio 39-277
Acrylic windows 39-102
Air filter, intake 39-221
Air systems, life support 39-221
ASME code requirements 39-33
Access and inspection openings 39-37
Attachments and supports 39-37
Experimental stress analysis 39-37
Flat heads, bolted and studded connections 39-36
General 39-33
Nozzles and other connections 39-36
Openings and their reinforcement 39-36
Quick-actuating closures 39-36
Rules for bolted flange connections 39-37
Shells of revolution under external pressure 39-35
Shells of revolution under internal pressure 39-35
Welded joints 39-35
Atmosphere monitoring, life support 39-240
Atmosphere requirements, life support 39-210
Audio communication systems, installation 39-280
Audio communications 39-277
Automatic controls, chamber 39-284
Automatic-manual controls, chamber 39-284

B

BIB masks 39-150
Bolting material 39-9
Breathing apparatus, emergency 39-262
Breathing gas, composition of 39-210
Breathing gas, consumption of 39-217
Breathing gas, temperature-humidity 39-220
Breathing gas system, cleaning 39-294
Breathing systems, auxiliary life support 39-239
Bunks 39-150

C

Cameras, video 39-282
Carbon dioxide control, gas systems 39-227
Chemical content, water treatment 39-250
Circulation, water supply 39-249
Cleaning 39-289
Acceptable cleaning agents 39-298
Breathing gas system 39-294
Documentation 39-298
Gas storage systems 39-297
Oxygen systems 39-297
Piping 39-297
Standards and specifications 39-297
Unacceptable cleaning agents 39-298
Closing mechanisms, doors and closures 39-133
Color code, piping 39-207a
Communications systems 39-277
Audio 39-277
Acoustics, chamber 39-277
Installation, example 39-280
Power requirement, intercom 39-278
Protection of equipment from pressure effects 39-278
Video 39-280
Cameras 39-282
Lighting 39-283
Recorders 39-283
Compressed air, life support 39-221, 39-223
Compressor, life support 39-221, 39-223
Compressors, gas systems 39-238
Compressors and compressed air distribution, additional information 39-223
Control systems, operating, chamber 39-284

Control panel 39-287
Types 39-284
 Automatic, computer-
39-127
  operated 39-284
 Automatic-manual 39-284
 Manual 39-284
Corrosion 39-20
Cylindrical chamber, design
 analysis, example of 39-76

D

Deck plates 39-150
Design, hyperbaric vessels 39-22
 Design analysis, cylindrical
  chamber, example of 39-76
  Materials and initial
   calculations 39-76
  Specification data 39-76
  Stress analysis 39-82
 Design analysis, spherical
  chamber, example of 39-39
  Design finalization 39-75
  Initial calculations 39-41
  Materials 39-41
  Specification data 39-39
  Stress documentation 39-76
 Requirements (ASME code) 39-33
  Access and inspection
   openings 39-37
  Attachments and supports 39-37
  Experimental stress
   analysis 39-37
  Flat heads, bolted and studded
   connections 39-36
  General 39-33
  Nozzles and other
   connections 39-36
  Openings and their rein-
   forcement 39-36
  Quick actuating closures 39-36
  Rules for bolted flange
   connections 39-37
  Shells of revolution under
   external pressure 39-35
  Shells of revolution under
   internal pressure 39-35
  Welded joints 39-35
 Stresses 39-22
  Analysis methods 39-22
  Classification 39-25
  Code identification 39-25
  Intensity 39-25
  Intensity limits 39-24
  Types 39-24
 Doors and closures

 Closing mechanisms 39-133
 Hinges 39-139
 Locations 39-148
 Lock spaces 39-148
 Safety interlocks 39-148
 Seals 39-139
 Size requirements 39-127
 Drains, water supply 39-249

E

Electrical systems 39-264
 Lighting 39-270
  Inside chambers 39-270
  Outside chambers 39-270
  Personnel requirements 39-275
 Materials and components 39-9
 Preliminary data 39-264
  Policies 39-264
  Related criteria 39-264
 Power supply, electric 39-265
  Acceptable power 39-266
  Emergency 39-265
  Primary 39-265
  Standby 39-265
 Wiring 39-267
  Grounding 39-270
  Inside chambers 39-267
  Outside chambers 39-267
Emergency breathing
 apparatus 39-262
Emergency power supply,
 electrical 39-265
Equipment protection from
 pressure effects 39-278

F

Fabrics 39-150
Finish, surface, viewports 39-123
Fire protection 39-254
 Emergency breathing
  apparatus 39-262
 Fire Extinguishers 39-257
 Hazards 39-257
Flange, viewports 39-120
Flange, connections, bolted,
 rules for (ASME code) 39-37
Flasks, storage, air systems,
 life support 39-222

Flat heads; bolted and studded connections (ASME code) 39-36
Flow analysis, piping 39-198
Flow requirements, water systems 39-247
Food supply, life support 39-242
Foundations 39-152
Analysis and design 39-156
Settlement 39-156
Settlement analysis 39-156
Type selection 39-158
Types 39-157
Installation in existing buildings 39-162
Foundation types 39-162
Soil-structure interaction 39-162
Structural supports 39-163
Related criteria 39-152
Site selection 39-153
Local 39-153
Regional 39-153
Structural supports 39-159
Design parameters, common 39-159
Design parameters, special 39-160
Steel and concrete 39-159
Subsurface evaluation 39-154
Laboratory tests 39-155
Preliminary design 39-154
Soil boring 39-154
Fluid flow, preliminary analysis, piping 39-180

G

Gas
Distribution 39-237
Mixed 39-225
Mixing 39-226
Monitoring 39-238
Storage 39-225
Storage systems, cleaning 39-297
Systems, life support 39-225
Truck transfer 39-225
Grounding, electrical 39-270

H

Hinges, doors and closures 39-139
Humidity-temperature, life support systems 39-220
Humidity-temperature control, gas systems 39-230
Hyperbaric pressure vessels, general 39-3
Classes 39-3
Design considerations 39-3
Design specifications, user's 39-5
Manufacturer's design report 39-5
Materials 39-8
Types 39-3

I

Intercom power requirements, audio 39-278
Interlocks, safety, doors and closures 39-148
Insulation, water systems 39-251

J

Joints, welded (ASME code) 39-35

L

Life support systems 39-210
Air systems 39-221
Air filter, intake 39-221
Compressed air 39-221, 39-223
Compressor 39-221, 39-223
Flasks, storage 39-222
Line freeze 39-223
Oil filter 39-222
Separator 39-222
Atmosphere monitoring 39-240
Breathing gas analysis, environment 39-240
Atmosphere requirements 39-210
Breathing gas, composition of 39-210
Breathing gas, consumption of 39-217
Temperature-humidity 39-220
Breathing systems, auxiliary 39-239
Built-in breathing apparatus 39-239
Food supply 39-242
Gas systems 39-225
Carbon dioxide control 39-227
Compressors/transfer pumps 39-238
Distribution, gas 39-237

Gas, mixed 39-225
Gas, mixing 39-226
Gas monitoring 39-238
Pumps, transfer 39-238
Storage, gas 39-225
Temperature-humidity control 39-230
Truck transfer 39-225
Materials and components 39-9
Sanitary system 39-242
Water, potable 39-242
Lighting 39-270
Lighting, video 39-283
Line freeze, air systems 39-223
Lubricants 39-289
39-207a
Lubrication, water systems 39-251

M

Manual controls, chamber 39-284
Materials, hyperbaric vessels 39-7
Classes 39-7
Class 1 39-7
Class 2 39-10
Class 3 39-11
Corrosion 39-20
Materials not permitted 39-12
Materials permitted 39-12
Toughness 39-13

N

Noise 39-205
Nozzles and other connections (ASME code) 39-36

O

Oil filter, life support 39-222
Oil separator, life support 39-222
Openings and their reinforcement (ASME code) 39-36
Oxygen 39-210
Concentration 39-210
Contaminants 39-213
Diluent gasses 39-212
Oxygen versus water ranges 39-212
Toxicity 39-210
Oxygen systems, cleaning 39-297

P

Paints 39-150
Pipe bending 39-176
Pipe joints 39-178
Pipe supports 39-176
Piping 39-165
Cleaning 39-297
Construction 39-176
Bending 39-176
Joints 39-178
Mechanical strength 39-176
Pipe supports 39-176
Design 39-180
Color code
Flow analysis, final 39-198
Fluid flow, preliminary analysis 39-180
Noise 39-205
Pressure 39-196
Procedures 39-167
Sequence 39-167
Structural analysis 39-201
System detailing 39-198
Materials 39-169
Applications 39-169
Classification 39-169
Compatibility, environmental 39-175
Compatibility, fluid 39-172
Compatibility, material 39-172
Economic factors 39-176
Engineering properties 39-175
Materials not permitted 39-171
Materials and components 39-9
Potable water, life support 39-242
Power requirements, intercom audio 39-278
Power supply, acceptable 39-266
Power supply, electrical 39-265
Pressure design, piping 39-196
Pressure testing, windows 39-126
Primary power supply, electrical 39-265
Protection of equipment from pressure effects 39-278
Pumps, transfer, gas systems 39-238

Q

Quick actuating closures (ASME code) 39-36

R

Recorders, video 39-283

S

Sanitary system, life support 39-242
Sealants 39-289
Sealing methods, viewports 39-100
Seals, doors and closures 39-139
Seats 39-150
Separator, air systems, life support 39-222
Shells of revolution under external pressure (ASME code) 39-35
Shells of revolution under internal pressure (ASME code) 39-35
Shower rings 39-150
Showers 39-150
Sinks 39-150
Spherical chamber, design analysis, example of 39-39
Standby power supply, electrical 39-265
Stresses 39-22
 Analysis methods 39-22
 Classification 39-25
 Code identification 39-25
 39-249
 Determining intensities 39-25
 Experimental stress analysis (ASME code) 39-37
 Intensity limits 39-24
 Types 39-24

T

Tables 39-150
Temperature control, water systems 39-251
Temperature-humidity control, gas systems 39-230
Temperature-humidity, life support systems 39-220
Toilets 39-150
Transfer pumps 39-238
Turbidity, water treatment 39-250

V

Viewports 39-96
 Acrylic windows, design of 39-102
 Field of view 39-102
 Flanges 39-120
 Material selection 39-100
 Sealing methods 39-100
 Surface finish 39-123
 Tolerances 39-123
 Types 39-96
 Window design 39-109
 Window fabrication 39-124
 Window installation 39-124
 Window pressure testing 39-126
 Window seals 39-123
 Window seats 39-120
Video communications 39-280

W

Water, potable, life support 39-242
Water systems, wet chamber 39-247
 Temperature control 39-251
  Insulation 39-251
  Lubrication 39-251
 Water supply 39-247
  Circulation 39-249
  Drain 39-249
  Flow requirements 39-247
  Lines 39-249
  Quality

  Volume 39-247
 Water treatment 39-250
  Chemical content 39-250
  Turbidity 39-250
Windows
 Acrylic 39-102
 Design 39-109
 Installation 39-124
 Pressure testing 39-126
 Seals 39-123
 Seats 39-120
 Tolerances 39-123
Wiring, electrical 39-267