CCB Application Notes:

1. Character(s) preceded & followed by these symbols (└ ┘) or (┌ ┐) are super- or subscripted, respectively.
   EXAMPLES: 42m└3┘ = 42 cubic meters
   CO┌2┐ = carbon dioxide

2. All degree symbols have been replaced with the word deg.

3. All plus or minus symbols have been replaced with the symbol +/-.

4. All table note letters and numbers have been enclosed in square brackets in both the table and below the table.

5. Whenever possible, mathematical symbols have been replaced with their proper name and enclosed in square brackets.

Naval Facilities Engineering Command
200 Stovall Street
Alexandria, Virginia 22332-2300

APPROVED FOR PUBLIC RELEASE

Mooring Design

Physical &

Empirical Data

Vessel & Ship Characteristics,
Mooring Lines & Chain Buoys,
Anchors & Riser Type Mooring Systems

DESIGN MANUAL 26.6
APRIL 1986

ABSTRACT

This manual presents mooring design physical and empirical data, such as vessel and ship characteristics, mooring lines and chains buoys, anchors, and riser type mooring systems.

FOREWORD

This design manual is one of a series developed from an evaluation of facilities in the shore establishment, from surveys of the availability of new materials and construction methods, and from selection of the best design practices of the Naval Facilities Engineering Command, other Government agencies, and the private sector. This manual uses, to the maximum extent feasible, national professional society, association and institute standards in accordance with NAVFACENGCOM policy. Deviations from these criteria should not be made without prior approval of NAVFACENGCOM Headquarters (Code 04).

Design cannot remain static any more than can the naval functions it serves or the technologies it uses. Accordingly, recommendations for improvement are encouraged from within the Navy and from the private sector and should be furnished to Commanding Officer, Chesapeake Division (Code 406), Naval Facilities Engineering Command, Washington Navy Yard, Washington, DC 20374. As the design manuals are revised, they are being restructured. A chapter, or a combination of chapters, will be issued as a separate design manual for ready reference to specific criteria.

This publication is certified as an official publication of the Naval Facilities Engineering Command and has been reviewed and approved in accordance with the SECNAVINST 5600.16.

J. P. Jones, Jr.
Rear Admiral, CEC, U. S. Navy
Commander
Naval Facilities Engineering Command

HARBOR AND COASTAL FACILITY
DESIGN MANUALS

DM No.	Superseded Chapters in DM-26	Title
26.1	1	Harbors
26.2	2	Coastal Protection
26.3	3 & 4	Coastal Sedimentation and Dredging
26.4	5	Fixed Moorings
26.5	6	Fleet Moorings
26.6	7	Mooring Design Physical and Empirical Data

TABLE OF CONTENTS

MOORING DESIGN
PHYSICAL & EMPIRICAL DATA

		Page
Section 1.	INTRODUCTION	26.6-1
	1. Scope	26.6-1
	2. Cancellations	26.6-1
	3. Related Criteria	26.6-1
Section 2.	WIND AND CURRENT DATA	26.6-2
	1. Wind and Current Data	26.6-2
Section 3.	VESSEL CHARACTERISTICS	26.6-6
	1. Vessel Characteristics	26.6-6
	2. Floating Drydock Characteristics	26.6-58
	3. Tankers and Barge Tanker Service Craft Characteristics	26.6-62
Section 4.	COMMERCIAL MOORING SYSTEM COMPONENTS	26.6-65
	1. Availability of Components	26.6-65
	2. Mooring Rope	26.6-65
	3. Chain and Fittings	26.6-79
	4. Anchors	26.6-126
	5. Buoys	26.6-153
	6. Sinkers	26.6-161
Section 5.	STANDARD RISER-TYPE MOORING SYSTEMS	26.6-163
	1. Mooring System Selection	26.6-163
	2. Anchor Selection	26.6-163
	3. Classes of Moorings Without Sinkers	26.6-166
	4. Classes of Moorings With Sinkers	26.6-179
Section 6.	STANDARD MOORING SYSTEM COMPONENTS	26.6-186
	1. General Notes	26.6-186
	2. Markings	26.6-186
	3. Tolerances	26.6-186
	4. Substitutions	26.6-187
Section 7.	AIDS TO NAVIGATION BUOYS	26.6-223
	1. Buoy Components	26.6-223
	2. U.S. Coast Guard Buoy Data	26.6-223
	3. Moorings for Standard Aids-to-Navigation Buoys	26.6-223
REFERENCES		26.6-242
BIBLIOGRAPHY		26.6-243

LIST OF TABLES

Table	Title	Page
1.	Wind and Current Data	26.6-3
2.	Characteristics of Auxiliary and Combatant Vessels and Service Craft	26.6-8
	Appendix: Auxiliary and Combatant Vessels Anchor Chain	26.6-56
3.	Characteristics of Floating Drydocks	26.6-59
4.	Manifold Locations - Tanker Vessels and Barge Tanker Service Craft	26.6-63
5.	Weight and Breaking Strength of Natural and Synthetic Fiber Ropes	26.6-66
6.	Weight and Breaking Strength of Composite Synthetic Fiber Ropes	26.6-69
7.	Weight and Breaking Strength of Kevlar 29 Synthetic Fiber Cables	26.6-72
8.	Comparison of Physical Characteristics - Natural and Synthetic Fiber Ropes	26.6-73
9.	Weight and Breaking Strength of Wire Rope for Marine Service	26.6-77
10.	A.B.S. Tolerances, Markings, and General Notes	26.6-80
11.	Chain, A.B.S. Stud Link	26.6-83
12.	Chain, Oil Rig Quality and Extra Strength Stud Link	26.6-85
13.	Chain, Standard Di-Lok	26.6-86
14.	Chain, U.S. Navy Di-Lok	26.6-87
15.	Chain, Super Strength Di-Lok	26.6-88
16.	Chain, U.S. Coast Guard Buoy Type	26.6-89
17.	Fitting Details, Enlarged Links	26.6-90
18.	Fitting Details, End Links	26.6-91
19.	Fitting Details, End Links - U.S. Navy Type	26.6-92
20.	Fitting Details, End Links and Rings	26.6-93
21.	Fitting Details, End Links and Rings	26.6-94
22.	Fitting Details, Detachable Chain Connecting Links	26.6-95
23.	Fitting Details, Detachable Chain Connecting Links "Kenter" Type	26.6-97
24.	Fitting Details, Detachable Chain Connecting Links	26.6-99
25.	Fitting Details, Detachable Chain and Anchor Connecting Links	26.6-100
26.	Fitting Details, Detachable Anchor Connecting Links	26.6-101
27.	Fitting Details, Round and Screw Pin Chain Shackles	26.6-102
28.	Fitting Details, Chain Shackles - "D" Type	26.6-103
29.	Fitting Details, End Shackles	26.6-105
30.	Fitting Details, Round Pin Anchor and End Shackles	26.6-107
31.	Fitting Details, Round and Screw Pin Anchor Shackles	26.6-108
32.	Fitting Details, Round Pin Anchor Shackles	26.6-109
33.	Fitting Details, Extra Heavy Duty Round Pin Anchor Shackles	26.6-110
34.	Fitting Details, Anchor Shackles - "D" Type	26.6-111
35.	Fitting Details, Swivels	26.6-113
36.	Fitting Details, Swivels	26.6-115
37.	Fitting Details, Swivel Shackles	26.6-116
38.	Fitting Details, Swivel Shackles	26.6-117

LIST OF TABLES (Continued)

Table	Title	Page
39.	Fitting Details, Regular and Jaw One End Swivels	26.6-121
40.	Fitting Details, Chain Stoppers - Devil's Claw Type	26.6-122
41.	Fitting Details, Chain Stoppers - Pelican Hook Type	26.6-123
42.	Fitting Details, Chain Stoppers - Ulster Type	26.6-124
43.	Fitting Details, Quick Release Hook	26.6-125
44.	Baldt Stockless Anchors	26.6-127
45.	U.S. Navy Standard Stockless Anchors	26.6-128
46.	U.S. Navy Lightweight Type Anchors (Lwt)	26.6-129
47.	U.S. Navy STATO Mooring Anchors	26.6-130
48.	Danforth Anchors	26.6-131
49.	High Holding Power Stock Anchors - Type 1 (Off drill II Type)	26.6-132
50.	High Holding Power Stock Anchors - Type 2 (G.S. Type)	26.6-133
51.	Moorfast Anchors	26.6-134
52.	Boss Mooring Anchors	26.6-135
53.	Snug Stowing Anchors	26.6-136
54.	A C-14 Anchors	26.6-137
55.	Deepsy Type Anchors	26.6-138
56.	Flipper Delta Anchors	26.6-139
57.	Delta Triple Anchors	26.6-140
58.	Stevin Anchors	26.6-141
59.	Stevfix Anchors	26.6-142
60.	Stevfix Anchors with Mud Adaptor	26.6-143
61.	Stevmud Anchors	26.6-144
62.	Stevdig Anchors	26.6-145
63.	Hook Anchors	26.6-146
64.	Hook Anchors with Auxiliary Shank Fluke	26.6-147
65.	Mark-2 Anchors	26.6-148
66.	TS Anchors	26.6-149
67.	Cable or Chain Depressors	26.6-150
68.	Chaseable Cable or Chain Depressor	26.6-151
69.	Chaser for Anchor Retrieval	26.6-152
70.	Spherical Marker or Mooring Buoy	26.6-154
71.	Spherical Marker or Mooring Buoys	26.6-155
72.	Spherical Marker or Mooring Buoys	26.6-156
73.	Tension Bar Mooring Buoys	26.6-157
74.	Tension Bar Mooring Buoys	26.6-158
75.	Hawsepipe and Tension Bar Mooring Buoys	26.6-159
76.	Hawsepipe and Tension Bar Mooring Buoys	26.6-160
77.	Concrete Sinkers	26.6-162
78.	Holding Power to Weight Ratios of Various Anchors	26.6-165
79.	Moorings Without Sinkers, Bills of Materials	26.6-169a
80.	Moorings Without Sinkers, Chain Set Assembly for Basic Depth	26.6-170
81.	Moorings Without Sinkers, Lengths of Ground Chain Required for Various Water Depths	26.6-171
82.	Moorings Without Sinkers, Chain Set Assemblies for Various Water Depths	26.6-172
83.	Moorings Without Sinkers, Bills of Materials	26.6-174

LIST OF TABLES (Continued)

Table	Title	Page
84.	Moorings Without Sinkers, Chain Set Assembly for Basic Depth	26.6-175
85.	Moorings Without Sinkers, Maximum Mooring Depths with Various Buoys	26.6-176
86.	Moorings Without Sinkers, Lengths of Ground Chain Required for Various Water Depths	26.6-177
87.	Moorings Without Sinkers, Chain Set Assemblies for Various Water Depths	26.6-178
88.	Moorings With Sinkers, Bills of Materials	26.6-181
89.	Moorings With Sinkers, Chain Set Assembly for Basic Depth	26.6-182
90.	Moorings With Sinkers, Maximum Mooring Depths with Various Buoys	26.6-183
91.	Moorings With Sinkers, Lengths of Ground Chain Required for Various Water Depths	26.6-184
92.	Moorings With Sinkers, Chain Set Assemblies for Various Water Depths	26.6-185
93.	Chain and Fitting Details, Permissible Tolerances	26.6-188
94.	Chain, Common A-Link	26.6-189
95.	Chain, Common A-Link and Riser	26.6-190
96.	Fitting Details, Joining Links	26.6-191
97.	Fitting Details, Joining Links	26.6-192
98.	Fitting Details, Joining Links	26.6-193
99.	Fitting Details, Joining Links	26.6-194
100.	Fitting Details, Joining Links	26.6-195
101.	Fitting Details, Anchor Joining Links	26.6-196
102.	Fitting Details, Anchor Joining Links	26.6-197
103.	Fitting Details, Anchor Joining Links	26.6-198
104.	Fitting Details, Anchor Joining Links	26.6-199
105.	Fitting Details, Anchor Joining Links	26.6-200
106.	Fitting Details, Anchor Joining Links (SET)	26.6-201
107.	Fitting Details, Anchor Joining Links (SET)	26.6-202
108.	Fitting Details, Anchor Joining Links (SET)	26.6-203
109.	Fitting Details, End Links	26.6-204
110.	Fitting Details, Type F Bending Shackles	26.6-205
111	Fitting Details, Sinker Shackles	26.6-206
112.	Fitting Details, Ground Rings	26.6-207
113.	Fitting Details, Swivels	26.6-208
114.	Fitting Details, Rubbing Castings	26.6-209
115.	Standard Stockless Anchors	26.6-210
116.	Standard Stockless Anchors with Stabilizers	26.6-211
117.	NAVSHIP Lightweight Anchors	26.6-212
118.	NAVFAC STATO Anchors	26.6-213
119.	Concrete Sinkers	26.6-214
120.	1962-Type Lighted and Unlighted Buoys	26.6-225
121.	1962-Type Unlighted Steel and Plastic Buoys	26.6-231
122.	Bills of Materials	26.6-238
123.	Information for Other Than Basic Depth	26.6-239
124.	Chain for Buoy Bridles	26.6-241

LIST OF FIGURES

Figure	Title	Page
1.	Free-Swinging, Riser-Type Mooring Without Sinkers - Classes AAA and BBB (Proposed)	26.6-167
2.	Free-Swinging, Riser-Type Mooring Without Sinkers - Classes AA, BB, and CC	26.6-168
3.	Free-Swinging, Riser-Type Mooring Without Sinkers - Class DD	26.6-169
4.	Free-Swinging, Riser-Type Mooring Without Sinkers - Classes A, B, C, D, E, F, and G	26.6-173
5.	Free-Swinging, Riser-Type Mooring With Sinkers - Classes A, B, C, D, and E	26.6-180
6.	Fitting Details, 4-lnch D-Shackle	26.6-215
7.	Fitting Details, Spiders	26.6-216
8.	Fitting Details, Release Hook for Mooring Buoy	26.6-217
9.	Standard Marker or Mooring Buoy	26.6-218
10.	Tension Bar Mooring Buoy	26.6-219
11.	Hawsepipe Mooring Buoy	26.6-220
12.	Tension Bar Mooring Buoy	26.6-221
13.	Buoy Mooring System Components	26.6-224
14.	Moorings for Navigation Buoys	26.6-997
15.	Moorings for Navigation Buoys	26.6-998
16.	Moorings for Navigation Buoys	26.6-229
17.	Moorings for Navigation Buoys	26.6-230
18.	Moorings for Navigation Buoys	26.6-232
19.	Moorings for Navigation Buoys	26.6-233
20.	Moorings for Navigation Buoys	26.6-234
21.	Moorings for Navigation Buoys	26.6-235
22.	Moorings for Navigation Buoys	26.6-236
23.	Moorings for Navigation Buoys	26.6-237

MOORING DESIGN
PHYSICAL & EMPIRICAL DATA

SECTION 1. INTRODUCTION

1. Scope. This manual presents naval vessel and ship characteristics, dimensions and ship characteristics, dimensions and strengths of mooring hardware components, and riser-type mooring systems for quick reference.

2. Cancellations. This publication of physical and empirical data for mooring design, NAVFAC DM-26.6, cancels and supersedes Chapter 7 of NAVFAC DM-26, Harbor and Coastal Facilities of July 1968, Changes of December 1968.

3. Related Criteria. For criteria related to mooring design but appearing elsewhere in the Design Manual series, see the following sources:

Subject	Source
Harbor layouts & mooring buoy locations	DM-26.1
Fixed moorings	DM-26.4
Fleet moorings	DM-26.5
Allowable stresses in steel	DM-2.3
Timber for rubbing surfaces	DM-2.5 & 25.6
Rubber fender units	DM-25.1
Aids to navigation	DM-26.1
Ship motions (terms)	DM-25.1
Anchor behavior	DM-26.5

SECTION 2. WIND AND CURRENT DATA

1. Wind and Current Data. Table 1 presents the magnitudes of maximum wind and current speeds at Naval installations around the world. The data are presented only as a guide; up-to-date information, as well as prevailing directions, should be obtained directly from the installation under consideration.

a. The tabulated wind speeds were recorded at an elevation of 33 feet above the water surface. See footnote (1) of the table.

b. The tabulated current speeds were recorded at the water surface. See footnote (2) of the table.

Table 1. Wind and Current Data

LOCATION	WIND: MAXIMUM SPEED[1] MPH	WIND: MAXIMUM SPEED[1] FT/SEC	WIND: OBSERVATION STATION	CURRENT: MAXIMUM SPEED[2] KNOTS	CURRENT: MAXIMUM SPEED[2] FT/SEC	CURRENT: OBSERVATION STATION
ATLANTIC COAST OF CONTINENTAL UNITED STATES						
Annapolis, Md. Naval Station.....	90	132	.....	0.8	1.4	.....
Boston, Mass. Navy Yard.....	100	147	Boston, Mass.	0.7	1.2	Chelsea River Entrance.
South Boston, Mass. Navy Yard.....	100	147	Boston, Mass.	1.3	2.2	Main Ship Channel off Castle Island.
Bayonne, N.J. Naval Supply Depot..	100	147	New York, N.Y.	1.8	3.0	Robbins Reef Light.
Block Island, R.I.	110	162	.....	---	---	.....
Cape May, N.J. Section Base.....	100	147	Atlantic City, N.J.	2.3	3.9	Cape May Canal, East End.
	.			1.1	1.9	Cape May Canal, West End.
Curtis Bay, Md. Coast Guard Base..	75	110	Baltimore, Md.	1.0	1.7	Baltimore Harbor Approach, off Sandy Point.
Charleston, S.C. Navy Yard	110	162	Charleston, S.C. ...	3.0	5.1	.....
Cherry Pt., N.C.	100	147	.....	---	---	.....
Chesapeake Bay at New Bridge Site.	85	125	.....	2.0	3.4	.....
Davisville, R.I.	105	154	.....	---	---	.....
Earle, N.J. Naval Weapons St.....	100	147	.....	4.4	7.4	.....
Green Cove Springs, Fla.	110	162	.....	---	---	.....
Jacksonville, Fla.	110	162	.....	---	---	.....
Key West, Fla. Naval Station.....	150	220	Key West, Fla.	2.0	3.4	Key West Harbor off Duvall St
Kings Bay, Ga. Subm. Support Base.	150	220	.....	3.0	5.1	.....
Little Creek, Va. Amp. Training Base.	105	154	Norfolk, Va.	3.0	5.1	Willoughby Spit.
Mayport, Fla. Section Base.....	150	220	.....	3.0	5.1	Mayport.
Miami, Fla.	150	220	.....	---	---	.....
New London, Conn. Subm. Base.....	115	169	.....	Thames River current too weak and variable to predict.		
Norfolk, Va. Naval Op. Base D.E. Piers.	110	162	Norfolk, Va.	0.8	1.4	Pierhead Sewall Point.
Norfolk, Va. South Gate Term. Navy Yard.	110	162	Norfolk, Va.	0.6	1.0	Virginia RR Br.
New York, N.Y. Navy Yard	100	147	New York, N.Y.	3.3	5.6	South of midstream Corlears Hook.
Newport, R.I.	105	154	.....	---	---	.....
Newport News, Va.	105	154	Norfolk, Va.	---	---	.....
Newark, N.J.	100	147	.....	---	---	.....
Patuxent, Md.	100	147	.....	---	---	.....
Pensacola, Fla. Naval Air St.	127	187	.....	1.8	3.0	.....
Portsmouth, N.H. Navy Yard	85	125	Portland, Maine.....	1.2	2.0	Northeast of Jamaica Island.
				1.8	3.0	North of Seavey Island.
Portsmouth, Va.	105	154	Norfolk, Va.	---	---	.....
Philadelphia, Pa. Navy Yard.....	85	125	Philadelphia, Pa. ..	1.8	3.0	Schuylkill River Entrance.
Providence, R.I.	105	154	.....	---	---	.....
Salem, Mass.	100	147	.....	---	---	.....
Savannah, Ga.	110	162	.....	---	---	.....
Solomons, Md. Amp. Training Base...	100	147	.....	0.6	1.0	Two miles northeast of Cedar Point.
Thoms Cove, Md.	75	110	Baltimore, Md.	---	---	.....
Washington, D.C. Navy Yard.....	92	135	.....	Current too weak or variable to predict.		
Wilmington, N.C.	100	147	.....	1.1	1.9	Cape Fear River.
Yorktown, Va.	85	125	.....	---	---	.....

[1] Wind velocities from the previous edition of DM-26 and DM-2. The maximum wind velocity is the highest average of the wind velocities of thirty seconds duration possible for locality, measured at the standard height of 33 feet. Recent model testing and mathematical modelling indicates that a thirty second wind duration is necessary to force a response from the majority of the larger vessels included in this manual.

[2] Current velocities from tables issued by U.S. Department of Commerce, National Ocean Survey. Current velocities normally vary considerably in magnitude and direction within a port and the velocities given in the table should be used for preliminary design only. Whenever possible, they should be verified for the particular location under consideration within the port.

Table 1. Wind and Current Data (Continued)

LOCATION	WIND: MAXIMUM SPEED[1] MPH	WIND: MAXIMUM SPEED[1] FT/SEC	WIND: OBSERVATION STATION	CURRENT: MAXIMUM SPEED[2] KNOTS	CURRENT: MAXIMUM SPEED[2] FT/SEC	CURRENT: OBSERVATION STATION
GULF COAST OF CONTINENTAL UNITED STATES						
Houston, Tex. Houston Ship Channel	105	154	Houston, Tex.	---	---	.....
Mobile, Ala.	110	162	.....	---	---	.....
New Orleans, La. Micheaud Canal...	105	154	New Orleans, La. ...	6.0	10.1	Mississippi River.
Orange, Tex. Sabine River.....	85	125	Port Arthur, Tex. ..	4.0	6.8	Sabine River.
PACIFIC COAST OF CONTINENTAL UNITED STATES						
Alameda, Calif.	60	88	San Francisco, Calif	---	---	.....
Bangor, Wash. Trident Facility (On opposite side of "island" from Naval Shipyard)	90	132	.....	1.0	1.7	.....
Bremerton, Wash. Navy Yard.....	90	132	Seattle, Wash.	current too weak or variable to predict.		Port Orchard.
California Shipyard.....	60	88	Los Angeles, Calif.	---	---	.....
Hunters Pt., Calif. Naval Dry Docks.	60	88	San Francisco, Calif	1.8	3.0	Hunters Point.
Long Beach, Calif.	60	88	.....	---	---	.....
Mare Island, Calif. Navy Yard.....	60	88	San Francisco, Calif	2.0	3.4	Mare Is. Strait at South Vallejo.
Point Barrow, Alas.	150	220	.....	---	---	.....
Port of Chicago, Calif.	60	88	San Francisco, Calif	---	---	.....
Puget Sound, Wash. Sinclair Inlet.	85	125	Seattle, Wash.	Current too weak or variable to predict.		Port Orchard.
Puget Sound, Wash. Ostrich Bay....	85	125	Seattle, Wash.	---	---	.....
Portland, Oreg.	60	88	Portland, Oreg.	---	---	.....
Port Hueneme, Calif.	60	88	.....	---	---	.....
San Diego, Calif. Repair Base.....	60	88	San Diego, Calif. ..	0.7	1.2	National City.
Seattle, Wash. Lake Washington....	80	118	Seattle, Wash.	---	---	.....
San Francisco, Calif. General Shipyard.	60	88	San Francisco, Calif	---	---	.....
Santa Cruz Is., Calif.	60	88	.....	---	---	.....
San Leandro Bay, Calif.	60	88	San Francisco, Calif	---	---	.....
Stockton, Calif.	60	88	San Francisco, Calif	---	---	.....
San Francisco, Calif.	60	88	San Francisco, Calif	2.3	3.8	Southeast of Treasure (Goat) Island.
Seal Beach, Calif.	60	88	Long Beach, Calif. .	---	---	.....
Suisun Bay, Calif.	60	88	San Francisco, Calif	2.5	4.2	South of Benicia.
Terminal Is., Calif. Roosevelt Base.	60	88	Los Angeles, Calif.	1.5	2.5	San Pedro Channel.
Tacoma, Wash.	80	118	Seattle, Wash.	---	---	.....
Tongue Point, Astoria, Oreg.	135	198	.....	---	---	.....
INTERIOR OF THE CONTINENTAL UNITED STATES						
Bercroft Reservoir, Va.	70	103	Washington, D.C. ...	---	---	.....
Charleston, W. Va.	55	81	.....	---	---	.....
Great Lakes, Mich.	85	125	.....	---	---	.....
Huntington, W. Va.	55	81	.....	---	---	.....
Pinopolis Reservoir, S.C.	100	147	Columbia, S.C.	---	---	.....
Pittsburgh, Pa.	75	110	.....	3.0	5.1	Ohio River.
Wheeling, W. Va.	70	103	.....	---	---	.....

[1] Wind velocities from the previous edition of DM-26 and DM-2. The maximum wind velocity is the highest average of the wind velocities of thirty seconds duration possible for locality, measured at the standard height of 33 feet. Recent model testing and mathematical modelling indicates that a thirty second wind duration is necessary to force a response from the majority of the larger vessels included in this manual.

[2] Current velocities from tables issued by U.S. Department of Commerce, National Ocean Survey. Current velocities normally vary considerably in magnitude and direction within a port and the velocities given in the table should be used for preliminary design only. Whenever possible, they should be verified for the particular location under consideration within the port.

Table 1. Wind and Current Data (Continued)

LOCATION	WIND MAXIMUM SPEED[1] MPH	WIND MAXIMUM SPEED[1] FT/SEC	WIND OBSERVATION STATION	CURRENT MAXIMUM SPEED[2] KNOTS	CURRENT MAXIMUM SPEED[2] FT/SEC	CURRENT OBSERVATION STATION
ATLANTIC OCEAN ISLANDS						
Bermuda	120	176		---	---	
Greenland: Grondal	120	176		---	---	
Greenland: Narsarssauk	145	213		---	---	
Iceland: Keflavik Naval St.	115	169		---	---	
Iceland: Reykjavik	115	169		---	---	
CARIBBEAN SEA ISLANDS						
Cuba: Guantanamo Bay	120	176		---	---	
Puerto Rico: Roosevelt Roads Naval St.	138	203		0.7	1.2	
Trinidad	75	110		---	---	
PACIFIC OCEAN ISLANDS						
Alaska: Kodiak Isl.	150	220		---	---	
Aleutian Is: Adak	150	220		---	---	
Aleutian Is: Massacre Bay, Attu	150	220		---	---	
Aleutian Is.: Dutch Harbor, Unalaska	150	220		---	---	
Hawaii: Pearl Harbor	60	88		---	---	
Johnston Island	60	88		---	---	
Mariana Is: Apra Harbor, Guam.	145	213		2.0	3.4	
Marshall Is: Kwajalein	110	162		---	---	
Midway Island	110	162		---	---	
Philippine Is: Subic Bay	130	191		2.0	3.4	
Ryukyu Is: Buckner Bay, Okinawa	160	235		---	---	
Wake Island	170	250		---	---	
MISCELLANEOUS PORTS						
Canal Zone: Balboa	100	147		---	---	
Canal Zone: Colon	85	125		---	---	
Canal Zone: Coco Solo	---	---		---	---	
Canal Zone: Cristobal	85	125		---	---	
French Morocco: Port Lyautey	75	110		6.0	10.1	Sebou River
Indian Ocean: Diego Garcia Naval Support Fac.	---	---		---	---	
Italy: Augusta Bay, Sicily	---	---		2.0	3.4	
Italy: La Maddalena Navy Support Off.	102	150		2.0	3.4	
Italy: Naples Naval Support Act.	102	150		2.0	3.4	
Japan: Iwakuni	---	---		10.0	16.9	
Japan: Sasebo Bay	---	---		1.0	1.7	
Japan: Yokosuka Ship Repair Fac.	98	144		5.0	8.4	
Newfoundland: Argentia	105	154		---	---	
Spain: Rota	---	---		---	---	
United Kingdom: Holy Loch	---	---		0.5	0.8	

[1] Wind velocities from the previous edition of DM-26 and DM-2. The maximum wind velocity is the highest average of the wind velocities of thirty seconds duration possible for locality, measured at the standard height of 33 feet. Recent model testing and mathematical modelling indicates that a thirty second wind duration is necessary to force a response from the majority of the larger vessels included in this manual.

[2] Current velocities from tables issued by U.S. Department of Commerce, National Ocean Survey. Current velocities normally vary considerably in magnitude and direction within a port and the velocities given in the table should be used for preliminary design only. Whenever possible, they should be verified for the particular location under consideration within the port.

SECTION 3. VESSEL CHARACTERISTICS

1. Vessel Characteristics. Table 2 is a comprehensive listing of principal data for vessels in the Naval fleet at the time of publication. For each vessel or class of vessels, the data are presented in groups of four consecutive pages. Characteristics of floating drydocks are presented separately as Table 3.

a. For purposes of calculating wind and current forces on moored vessels, the table contains data pertaining to vessel length, draft (four stages), displacement, beam, and broadside and frontal wind presentment areas.

b. The following is a list of footnotes which apply to Table 2:

(1) Vessel characteristics were obtained from the following sources: inquiries to the vessel's assigned base; the Booklet of General Plans for each class of vessel; the Naval Vessel Register/Ships Data Book, Volumres I and II, April 1980 Edition; the previous edition of NAVFAC DM-26, Chapter 7, Table 7-4; Technical Report 7096-1, 1971; and Jane's Fighting Ships, 1978-1979 Edition. When data sources conflicted, the order of preference for data veracity and inclusion in the table was the order in which the data sources are listed above.

(2) Data from inquiry to vessel's assigned base.

(3) Vessels in class were established from the hull prototype number. Two or more hull prototype numbers possessing the same or nearly the same dimensions and other characteristics were combined in the same class.

(4) Ordinarily, extreme breadth is the maximum width of a vessel. It is included only to allow the calculation of berthing dimension requirements. The waterline breadth must be used to calculate mooring loads. For submarines, the value given is the maximum diameter or width of the hull structure. This value is not necessarily the maximum width which may occur at the horizontal stabilizer planes and is so noted under the column entitled comments. Canted aircraft carrier flight decks may not be dimensionally symmetrical about the longitudinal centerline of the vessel, making the extreme breadth value for aircraft carriers unsuitable for determining berthing camel width at piers and wharves with gantry crane service.

(5) Maximum navigational draft is the minimum depth of water required to prevent grounding of a vessel due to appendages projecting below the vessel's base line or keel. Such appendages may be sonar domes, propellers rudders, hydrofoils, vertical submarine control planes, etc. Many vessels also possess a decided trim to the bow or stern in fully loaded condition or, in the case of submarines, a trim to the stern in surfaced condition. The fully loaded, 1/3 stores/cargo/ballast, and light draft values are the average midship values of drafts measured at the forward and aft perpendiculars for each loading condition.

(6) One long ton equals 2240 pounds.

(7) Displacements of vessels within the same class may vary considerably. The fully loaded displacement values are the maximum displacements for all vessels within the class, whereas the light draft displacements are the minimum values for all vessels within the class.

(8) Unless otherwise noted in the comment column, broadside and frontal wind areas were calculated from the vessel's port or starboard profile and the maximum vessel cross sections indicated in the booklet of general plans for each class of vessel. The profiles and sections were measured by planimeter and the areas calculated utilizing the fully loaded and light draft waterline values to establish the maximum change in wind presentment areas. A factor of 10 percent of the fully loaded broadside and frontal square foot wind areas was added to these values to compensate for handrails, minor masts and appurtenances, airplanes, etc., that could not be traced for planimetering purposes.

(9) The primary effect of vessel characteristics is on the magnitudes of the forces as they relate to the presentment areas for wind and current. The following paragraphs highlight some of these vessel characteristic influences.

One of the principal characteristics affecting wind forces on vessels is the shape and type of superstructure. In this manual, single-hulled vessels are classed according to two categories -- "normal vessel" and "hull-dominated vessel". These two categories were determined from analyses of wind force coefficients which showed that the ratio between hull area and superstructure area has a great effect on the longitudinal wind force. The separation effects of the superstructure are very significant in determining the longitudinal wind force for certain ships. However, on vessels with little or no superstructure, the drag forces on the hull dominate.

"Special vessels" are those which cannot be characterized as belonging to either of the other two categories.

Table 2. Characteristics of Auxiliary and Combatant Vessels and Service Craft (1)

VESSEL DESIG-NATION	VESSELS IN CLASS (3)	TYPE OF VESSEL
AD	14,15,17-19	Destroyer Tender
AD	24,26,36	Same as Above
AD	37,38	Same as Above
AD	41-44	Same as Above
AE	21-25	Ammunition Ship
AE	26-29,32-35	Same as Above
AF	58	Store Ship
AFS	1-7	Combat Store Ship
AG	153,154	Miscellaneous
AG	164	Same as Above
AGDS	2	Auxiliary Deep Submer-gence Support Ship
AGER	2	Environmental Research
AGF	3	Miscell. Command Ship
AGM	8	Missile Range Instru-mentation ship
AGM	9,10	Same as Above
AGM	19,20	Same as Above
AGM	22	Same as Above
AGM	23	Same as Above
AGOR	7,12,13	Oceanographic Research
AGOR	11	Same as Above
AGOR	16	Same as Above
AGOS	1-3	Ocean Surveillance Ship
AGS	21,22	Surveying Ship
AGS	26,27,33,34,38	Same as Above
AGS	29,32	Same as Above
AGSS	555	Auxiliary Submarine
AGSS	569	Same as Above
AH	17	Hospital Ship
AK	237,240,242,254,274	Cargo Ship
AK	255,267	Same as Above
AK	271	Same as Above

See introduction to table for footnotes.

Table 2. Characteristics of Auxiliary and Combatant Vessels and Service Craft (1) (Continued)

LENGTHS IN FEET		BREADTHS IN FEET (4)		DRAFTS IN FEET (5)			
OVERALL	AT LOADED WATER-LINE	EXTREME	AT LOADED WATER-LINE	MAXIMUM NAVIGATIONAL	FULLY LOADED	1/3 STORES/ CARGO/ BALLAST	LIGHT
531.0	520.0	73.0	73.0	See Comments	26.0	18.4	14.6
492.0	465.0	70.0	70.0	See Comments	27.0	19.4	15.6
645.0	620.0	85.0	85.0	30.0	27.0	22.7	20.5
643.0	620.0	85.0	85.0	See Comments	22.1	19.7	16.0
511.0	492.0	72.0	72.0	See Comments	29.0	22.1	18.7
564.0	540.0	81.0	81.0	See Comments	28.0	20.1	16.1
502.0	486.0	72.0	72.0	27.3 (2)	26.5 (2)	19.5	16.0
581.0	554.0	79.0	79.0	28.0	28.0	20.2	16.2
564.0	537.0	76.0	76.0	28.0	27.0	23.9	22.3
455.0	437.0	66.0	66.0	24.3 (2)	21.8 (2)	17.3	15.1
466.0	448.0	74.0	72.0	24.1	22.6 (2)	21.1	20.3 (2)
177.0	171.0	32.0	32.0	10.0	10.0	8.0	7.0
522.0	500.0	100.0	84.0	23.0	23.0	19.1	17.2
455.0	445.0	62.0	62.0	--	28.5 (2)	20.6	16.7
520.0	502.0	72.0	72.0	--	26.3 (2)	23.4	22.0
595.0	575.0	75.0	75.0	30.5 (2)	27.1 (2)	19.5	15.7
455.0	445.0	62.0	62.0	27.0	23.5 (2)	19.6	17.7
564.0	528.0	76.0	76.0	28.0	27.0	--	--
209.0	196.0	40.0	39.0	20.0 (2)	16.3 (2)	14.4	13.5
266.0	247.0	52.0	51.0	20.8 (2)	18.0 (2)	16.6	15.9
246.0	218.0	75.0	75.0	22.9 (2)	20.1 (2)	19.4	17.6
--	--	--	--	--	--	--	--
455.0	445.0	62.0	62.0	28.2 (2)	25.0 (2)	18.7	15.6
285.0	267.0	48.0	48.0	18.8 (2)	16.0 (2)	14.3	13.5
394.0	362.0	54.0	54.0	16.0	15.0	13.3	12.4
165.0	159.0	18.0	16.0	17.9 (2)	15.6 (2)	14.8	14.4 (2)
205.0	187.0	27.0	25.0	22.0	19.0	16.6	15.4
519.0	496.0	72.0	72.0	26.0	26.0	22.3	20.4
455.0	445.0	62.0	62.0	29.0	28.5 (2)	15.9	9.6
520.0	506.0	72.0	72.0	33.0	32.8 (2)	20.5	14.4
266.0	235.0	52.0	51.0	--	19.0	12.9	9.8

See introduction to table for footnotes.

Table 2. Characteristics of Auxiliary and Combatant Vessels and Service Craft (1) (Continued)

CLASS	VESSELS IN CLASS (3)	PER IN. IMMERSION IN LONG TONS (6)	DISPLACEMENT IN LONG TONS (7) FULLY LOADED	1/3 STORES/ CARGO/ BALLAST	LIGHT
AD	14,15,17-19	67.0	18,400	12,290	9,240
AD	24,26,36	58.0	16,740	11,450	8,800
AD	37,38	89.0	20,500	15,900	13,600
AD	41-44	95.0	19,740	16,870	13,220
AE	21-25	61.0	17,450	12,420	9,910
AE	26-29,32-35	71.5	19,670	12,860	9,450
AF	58	56.0 (2)	15,500 (2)	10,800	8,450 (2)
AFS	1-7	67.0 (2)	18,660	12,330	9,170 (2)
AG	153, 154	67.0	17,960	15,450	14,200
AG	164	47.0 (2)	11,150 (2)	8,620	7,350 (2)
AGDS	2	61.0 (2)	12,420	11,400	10,890 (2)
AGER	2	9.3	945	720	610
AGF	3	85.0	13,900	9,970	8,000
AGM	8	49.0 (2)	15,200 (2)	10,590	8,280 (2)
AGM	9, 10	60.0 (2)	17,120 (2)	15,040	14,000 (2)
AGM	19, 20	80.0 (2)	24,710 (2)	17,420	13,770 (2)
AGM	22	48.0	12,170	9,660	8,850 (2)
AGM	23	63.0	--	16,080	12,980
AGOR	7, 12, 13	12.0 (2)	1,640 (2)	1,370	1,230 (2)
AGOR	11	40.0 (2)	3,510 (2)	2,840	2,510 (2)
AGOR	16	18.0 (2)	3,420	3,050	2,870
AGOS	1-3	--	--	--	--
AGS	21, 22	48.0 (2)	13,050 (2)	9,420	7,610 (2)
AGS	26, 27, 33, 34, 38	21.0 (2)	2,830	2,410	2,200 (2)
AGS	29,32	33.0	3,670	2,980	2,640
AGSS	555	3.9	860	820	800
AGSS	569	7.0	1,540	1,340	1,240
AH	17	60.0	15,400	12,730	11,400
AK	237, 240, 242, 254, 274	47.0 (2)	15,200	8,080	4,520
AK	255, 267	61.0 (2)	22,050 (2)	13,070	8,580 (2)
AK	271	17.0	3,890	2,640	2,020

See introduction to table for footnotes.

Table 2. Characteristics of Auxiliary and Combatant Vessels and Service Craft (1) (Continued)

BROADSIDE WIND AREAS (8) IN SQUARE FEET			FRONTAL WIND AREAS (8) IN SQUARE FEET			COMMENTS (9)
FULLY LOADED	1/3 STORES/ CARGO/ BALLAST	LIGHT	FULLY LOADED	1/3 STORES/ CARGO/ BALLAST	LIGHT	N.V. - NORMAL VESSEL H.D. - HULL DOMINATED S.V. - SPECIAL VESSEL
26,770	30,730	32,700	4,140	4,690	4,970	AD-14,19,26.0'; AD-15,28.0'; AD-17,18,29.0'; N.V.
23,890	27,430	29,190	3,810	4,340	4,610	AD-24,29.0';AD-26,36,28.0';N.V.
48,050	50,870	52,280	7,590	7,960	8,140	N.V.
44,080	45,640	47,870	6,600	6,920	7,080	AD-41,24.0';AD-42,23.0';N.V.
18,950	22,300	24,000	4,150	4,600	4,870	AE-21,23,25,29.0';AE-22, 34.0'; AE-24, 32.0';N.V.
30,750	34,950	37,000	6,900	7,500	7,850	AE-35, 28.0';AE-28,29, 30.0'; AE-32,33, 30.0';AE-26,27,34, 31.0';N.V.
20,400	23,700	25,350	3,750	4,250	4,500	Former MA-36;N.V.
28,350	32,450	34,500	5,750	6,400	6,700	N.V.
21,400	23,050	23,900	4,750	5,000	5,100	Former YAG-56 & 57; N.V.
18,800	23,670	26,100	5,200	5,450	5,650	Former AK-239; N.V.
19,650	20,300	20,650	4,800	4,900	4,950	Former AKD-1; N.V.
2,800	3,150	3,350	830	890	920	Former AKL-44;N.V.
29,970	31,900	32,870	6,830	7,160	7,320	Former LPD-3;N.V.
16,150	19,600	21,300	4,150	4,650	4,850	Former MCV-686;N.V.
34,500	34,850	35,000	5,000	5,250	5,350	Former AP-139 & 145;N.V.
29,250	33,650	35,800	5,200	5,750	6,050	Former MC-1274 & 1280;N.V.
21,200	22,850	23,700	3,800	4,050	4,150	Former APA-205;N.V.
--	--	--	--	--	--	Former AG-154; N.V.
4,750	5,100	5,300	1,020	1,090	1,130	N.V.
7,900	8,200	8,350	2,200	2,250	2,300	Former AK-272;N.V.
9,450	9,800	10,000	4,220	4,300	4,350	Catamaran; S.V.
--	--	--	--	--	--	Under construction
13,900	16,650	18,000	4,150	4,550	4,800	Former MCV-694 & 682;N.V.
9,900	10,350	10,550	2,600	2,680	2,720	N.V.
17,100	17,700	18,000	3,500	3,600	3,650	N.V.
1,010	1,130	1,190	60	66	70	25.5' Breadth at Stern Planes; H.D.
1,710	2,160	2,380	220	290	320	H.D.
25,540	27,390	28,320	4,500	4,770	4,900	Wind Areas Developed from previous edition of DM-26; Former MC-748; N.V.
12,400	17,800	20,750	2,950	3,750	4,150	AK-237,240,242,254 Former MCV-18,162,743 & 547;AK-274 Former AS-170;N.V.
16,700	22,800	25,840	5,050	5,900	6,350	Former MC-735 & 753;N.V.
7,180	8,660	9,340	2,170	2,490	2,650	Former MA-47;N.V.

Table 2 (a). Characteristics of Auxiliary and Combatant Vessels and Service Craft (1)

VESSEL DESIG-NATION	VESSELS IN CLASS (3)	TYPE OF VESSEL
AK	277	Cargo Ship
AK	280-283	Same as Above
AKR	7	Vehicle Cargo Ship
AKR	9	Same as Above
AO	57,62	Oiler
AO	51,98,99	Oiler
AO	105-109	Oiler
AO	143-148	Oiler
AO	177-180,186	Oiler
AOE	1-4	Fast Combat Support Ship
AOG	58	Gasoline Tanker
AOG	77-79	Same as Above
AOG	81,82	Same as Above
AOR	1-7	Replenishment Oiler
AOT	50,67,73,75,76,78,134	Transport Oiler
AOT	149,151,152	Same as Above
AOT	165	Same as Above
AOT	168-176	Same as Above
AOT	181	Same as Above
AOT	182-185	Transport Oiler
AP	110,117,119	Transport
AP	122,123,125-127	Same as Above
AP	197,198	Same as Above
APL	2,4,5,15,18,19,29,31,32,34,42,43,50, 54,57,58	Barracks Craft NSP
AR	5-8	Repair Ship
ARC	2,6	Cable Repairing Ship
ARC	3	Same as Above
		Same as Above
ARL	24	Landing Craft Repair Ship
ARS	6,8,21,34,38-43	Salvage Ship
AS	50-53	Salvage Ship

See introduction to table for footnotes.

Table 2 (a). Characteristics of Auxiliary and Combatant Vessels and Service Craft (1) (Continued)

LENGTHS IN FEET		BREADTHS IN FEET (4)		DRAFTS IN FEET (5)			
OVERALL	AT LOADED WATER-LINE	EXTREME	AT LOADED WATER-LINE	MAXIMUM NAVIGATIONAL	FULLY LOADED	1/3 STORES/ CARGO/ BALLAST	LIGHT
478.0	456.0	66.0	66.0	30.0	30.0 (2)	17.8	11.7
459.0	450.0	63.0	63.0	28.5	28.5	18.8	14.0
499.0	484.0	78.0	78.0	27.1	27.1 (2)	18.3	13.9
540.0	520.0	83.0	83.0	29.1	29.1 (2)	19.5	14.7
553.0	544.0	75.0	75.0	34.0	32.0	18.5	11.8
644.0	616.0	75.0	75.0	39.0	38.0	23.6	16.4
644-664	636.0	75.0	75.0	35.8	35.8 (2)	18.9	10.4
655.0	642.0	86.0	86.0	36.7 (2)	33.6 (2)	19.5	12.5 (2)
592.0	568.0	88.0	88.0	--	32.4	19.0	12.3
796.0	770.0	107.0	107.0	41.0	41.0	25.9	18.4
311.0	292.0	49.0	49.0	16.0	16.0	10.6	7.9
325 0	315.0	48.0	48.0	19.0	19.0	11.4	7.6
302.0	295.0	61.0	61.0	22.2 (2)	22.2 (2)	13.4	9.0
659.0	640.0	96.0	96.0	36.5 (2)	36.5 (2)	22.8	16.0
524.0	510.0	68.0	68.0	30.0	30.0	16.2	9.3
620.0	600.0	84.0	84.0	33.6	33.6 (2)	17.0	8.7
615.0	605.0	80.0	80.0	36.0	36.0 (2)	19.3	11.0
587.0	572 0	84.0	84.0	34.5	34.5 (2)	16.2	7.1
620.0	600 0	84.0	84.0	33.7	33.7 (2)	16.8	8.3
672.0	650.0	89.0	89.0	36.2	36.2 (2)	17.2	7.7
623.0	590.0	76.0	76.0	26.0	26.0	20.1	17.2
609.0	590.0	76.0	76.0	29.1 (2)	29.1 (2)	20.2	15.8
534.0	512.0	73.0	73.0	27.0	27.0	21.1	18.2
261.0	260.0	49.0	49.0	11.0	10.0	7.6	5.9
530.0	520.0	73.0	73.0	26.0	24.0	17.4	14.1
374.0	340.0	47.0	47.0	29.4 (2)	25.1 (2)	18.4	15.0
439.0	402.0	58.0	58.0	18.6 (2)	16.0 (2)	12.3	10.5
--	--	--	--	--	--	--	--
328.0	316.0	50.0	50.0	14.0	14.0	10.5	8.7
214.0	207.0	43.0	43.0	15.1 (2)	14.3	12.4	11.5 (2)
255.0	240.0	51.0	50.4	17.8	26.0	19.9	16.8

See introduction to table for footnotes.

Table 2 (a). Characteristics of Auxiliary and Combatant Vessels and Service Craft (1) (Continued)

CLASS	VESSELS IN CLASS (3)	PER IN. IMMERSION IN LONG TONS (6)	DISPLACEMENT IN LONG TONS (7) FULLY LOADED	1/3 STORES/ CARGO/ BALLAST	LIGHT
AK	277	50.0 (2)	16,730	9,400	5,740 (2)
AK	280-283	48.0 (2)	15,200 (2)	9,610	6,820 (2)
AKR	7	64.0 (2)	18,290 (2)	11,550	8,180 (2)
AKR	9	72.0 (2)	21,580 (2)	13,290	9,150 (2)
AO	57,62	74.0	25,450	13,460	7,470
AO	51,98,99	92.0	34,750	18,820	10,850
AO	105-109	86.0 (2)	35,650 (2)	18,180	9,450 (2)
AO	143-148	96.4	36,660 (2)	20,050	11,750 (2)
AO	177-180,186	84.0	27,500	13,990	7,240
AOE	1-4	128.0 (2)	53,600	30,450	18,870 (2)
AOG	58	27.0	4,440	2,680	1,800
AOG	77-79	29.0	6,050	3,420	2,100
AOG	81,82	29.0 (2)	6,970 (2)	3,900	2,370 (2)
AOR	1-7	102.5 (2)	37,700	20,900	12,500
AOT	50,67,73,75,76,78,134	67.0	21,880	10,790	5,250
AOT	149,151,152	90.0 (2)	34,760 (2)	16,840	7,880 (2)
AOT	165	81.0 (2)	32,700 (2)	16,500	8,400 (2)
AOT	168-176	85.0 (2)	34,500 (2)	15,900	6,600 (2)
AOT	181	90.0 (2)	34,800 (2)	16,490	7,330 (2)
AOT	182-185	109.0 (2)	45,880 (2)	21,030	8,600 (2)
AP	110,117,119	77.0 (2)	20,750 (2)	15,320	12,600
AP	122,123,125-127	74.0 (2)	22,570	14,720	10,800
AP	197,198	61.0	17,630	13,360	11,220
APL	2,4,5,15,18,19,29,31, 32,34,42,43,50,54,57,58	26.0	2,580	1,730	1,300
AR	5-8	66.0	17,200	11,950	9,320
ARC	2,6	29.0 (2)	7,810 (2)	5,470	4,300 (2)
ARC	3	42.0 (2)	7,040 (2)	5,200	4,280 (2)
ARC	7	--	--	--	--
ARL	24	33.0	4,330	2,920	2,220
ARS	6,8,21,34,38-43	14.3 (2)	1,970 (2)	1,640	1,470 (2)
AS	50-53	22.9	3,100	2,800	2,500

See introduction to table for footnotes.

Table 2 (a). Characteristics of Auxiliary and Combatant Vessels and Service Craft (1) (Continued)

BROADSIDE WIND AREAS (8) IN SQUARE FEET			FRONTAL WIND AREAS (8) IN SQUARE FEET			COMMENTS (9)
FULLY LOADED	1/3 STORES/ CARGO/ BALLAST	LIGHT	FULLY LOADED	1/3 STORES/ CARGO/ BALLAST	LIGHT	N.V. - NORMAL VESSEL H.D. - HULL DOMINATED S.V. - SPECIAL VESSEL
16,600	22,200	24,950	3,950	4,750	5,150	Former MC-2918;N.V.
12,100	16,300	18,400	2,750	3,350	3,650	Former MCV-174,526,106,& AKA-92;N.V.
23,200	27,300	29,350	5,000	5,700	6,050	Former LSV-7;N.V.
25,050	30,000	32,500	5,400	6,200	6,600	Former LSV-9;N.V.
17,050	24,150	27,700	3,900	4,900	5,400	Former MC-723 & 728;N.V.
22,000	30,900	35,300	4,900	5,930	6,480	Former MC-2521 & 717;N.V.
17,650	28,350	33,700	3,850	5,150	6,750	Former MC-2701-2704 & AOR-109; N.V.
21,850	30,850	35,350	5,050	6,300	6,900	Nav. Draft 40.0’ for AO-146 & 148;N.V.
27,100	34,630	37,990	5,670	6,870	7,530	N.V.
36,650	48,180	54,600	6,400	8,000	8,850	N.V.
7,350	8,900	9,700	1,800	2,070	2,200	Assigned to U.S. Air Force; Wind areas developed from previous edition of DM-26;N.V.
6,900	9,250	10,450	2,000	2,350	2,550	Former MC-2640,2639 & 2647;N.V.
7,800	10,300	11,550	2,400	2,950	3,200	Former MA-44 & 45;N.V.
29,050	37,550	41,750	7,250	8,600	9,250	Nav. Draft AOR-6 only 39.0’; N.V.
14,350	21,100	24,450	3,850	4,750	5,250	All Former AO of same number; Nav. Draft AOT-50 only 33.0’; N.V.
17,350	27,300	32,300	4,400	5,800	6,500	Former MA-38,40,41 & AO-149, 151,152;N.V.
15,700	25,650	30,620	4,300	5,600	6,300	Former MA-53 & AO-165;N.V.
14,050	24,700	30,050	5,300	6,800	7,600	Former AO-168-176;N.V.
15,650	25,850	30,950	5,650	7,050	7,770	Former AO-181;N.V.
15,800	28,200	34,400	5,000	6,650	7,500	Former AO-182-185;N.V.
35,050	38,500	40,200	5,850	6,300	6,500	Former MC-688,675,677;N.V.
27,800	32,900	35,450	5,050	5,750	6,100	Former MC-680,681,683-685;N.V.
26,450	29,400	30,900	5,500	5,950	6,150	Former MC-2915 & 2916;N.V.
10,550	11,450	11,900	2,200	2,350	2,450	APL-15,18,19 only Former YF-609,629,630;H.D.
27,080	30,420	32,090	5,050	5,530	5,770	AR-8 Former ARH-1;Nav. Draft for AR-7 only 28.0’;N.V.
11,300	14,750	16,450	2,150	2,600	2,800	Former MC-2557 & 2558;N.V.
16,300	17,800	18,550	3,600	3,800	3,900	Former AKA-47;N.V. Under Construction
10,550	11,650	12,200	1,600	1,750	1,850	Former LST-963;N.V.
5,450	5,800	6,000	1,650	1,700	1,750	ARS-34 Former BARS-4;N.V.
6,480	6,820	7,100	2,335	2,404	6,200	N.V.

Table 2 (b). Characteristics of Auxiliary and Combatant Vessels and Service Craft (1)

VESSEL DESIG-NATION	VESSELS IN CLASS (3)	TYPE OF VESSEL
AS	11,12,15-18	Submarine Tender
AS	19	Submarine Tender
AS	31,32	Same as Above
AS	33,34	Same as Above
AS	36,37	Same as Above
AS	39-41	Submarine Tender
ASR	9,13-15	Submarine Rescue Ship
ASR	21,22	Same as Above
ATA	181,193,213	Auxiliary Ocean Tug
ATF	76,85,91,105,110,113,149,158-160 & 162	Fleet Ocean Tug
ATF	166-172	Same as Above
ATS	1-3	Salvage & Rescue Tug
AVM	1	Guided Missile Ship
AVT	16	Auxiliary Aircraft Transport
BB	61-64	Battleship
CA	134,139	Heavy Cruiser
CG	10,11	Guided Missile Cruiser
CG	16-24	Guided Missile Cruiser
CG	26-34	Same as Above
CG	47 48	Same as Above
CGN	9	Guided Missile Cruiser Nuclear
CGN	25	Same as Above
CGN	35	Same as Above
CGN	36,37	Same as Above
CGN	38-41	Same as Above
CV	34	Aircraft Carrier
CV	41,43	Same as Above

See introduction to table for footnotes.

Table 2 (b). Characteristics of Auxiliary and Combatant Vessels and Service Craft (1) (Continued)

LENGTHS IN FEET		BREADTHS IN FEET (4)		DRAFTS IN FEET (5)			
OVERALL	AT LOADED WATER-LINE	EXTREME	AT LOADED WATER-LINE	MAXIMUM NAVIGATIONAL	FULLY LOADED	1/3 STORES/ CARGO/ BALLAST	LIGHT
531.0	520.0	73.0	73.0	26.0	26.0	19.9	16.8
574.0	564.0	73.0	73.0	26.0	26.0	21.5	19.2
599.0	581.0	83.0	83.0	27.0	26.0	20.7	18.1
644.0	620.0	85.0	85.0	30.0	28.0	26.9	26.3
644.0	620.0	85.0	85.0	30.0	29.0	23.5	20.8
644.0	620.0	85.0	85.0	30.0	26.0	24.8	23.0
252.0	247.0	44.0	42.0	See Comments	17.0	15.1	14.2
251.0	237.0	93.0	86.0	24.9	23.9 (2)	21.9	20.8 (2)
143.0	127.0	34.0	34.0	15.0	14.0	12.3	11.4
205.0	201.0	39.0	39.0	18.0	16.0	13.7	12.6
--	--	--	--	--	--	--	--
283.0	264.0	50.0	50.0	18.0	17.0	14.9	13.9
540.0	520.0	72.0	71.0	27.3 (2)	27.3 (2)	24.1	22.5
910.0	828.0	189.0	103.0	31.0	30.0	25.3	23.0
888.0	860.0	109.0	108.0	38.0	37.0	31.7	29.1
717.0	700.0	77.0	75.0	26.0	26.0	22.8	21.2
675.0	664.0	71.0	69.0	30.0	26.0	21.7	19.6
533.0	510.0	55.0	54.0	26.0	19.0	14.9	12.8
547.0	524.0	55.0	54.0	See Comments	20.5 (2)	17.2	15.5
--	--	--	--	--	--	--	--
721.0	690.0	73.0	72.0	31.0	25.0	23.7	23.1
565.0	540.0	58.0	57.0	26.0	21.0	20.2	19.8
564.0	540.0	58.0	57.0	30.5	20.4	19.6	19.2
596.0	570.0	61.0	60.0	31.0	21.0	19.4	18.6
586.0	560.0	63.0	61.0	32.6	21.8	20.2	19.5
911.0	831.0	107.0	103.0	33.0	32.0	27.3	24.9
1001.0	914.0	See Comments	121.0	36.0	35.0	29.9	27.4

See introduction to table for footnotes.

Table 2 (b). Characteristics of Auxiliary and Combatant Vessels and Service Craft (1) (Continued)

CLASS	VESSELS IN CLASS (3)	PER IN. IMMERSION IN LONG TONS (6)	DISPLACEMENT IN LONG TONS (7) FULLY LOADED	1/3 STORES/ CARGO/ BALLAST	LIGHT
AS	11,12,15-18	65.0	17,150	12,360	9,960
AS	19	75.0	20,300	16,230	14,190
AS	31,32	81.0	19,820	14,670	12,100
AS	33,34	96.0	21,530	20,230	19,580
AS	36,37	98.0	23,490	17,060	13,840
AS	39-41	98.0	23,000	16,890	13,840
ASR	9,13-15	16.0	2,320	1,970	1,790
ASR	21,22	23.0 (2)	4,910	4,370	4,100 (2)
ATA	181,193,213	8.0	860	690	610
ATF	76,85,91,105,110,113,149, 158-160 & 162	12.0	1,730	1,400	1,240
ATF	166-172	--	--	--	--
ATS	1-3	24.0	3,060	2,470	2,170
AVM	1	64.0	14,480	12,040	10,820 (2)
AVT	16	146.0	42,110	33,890	29,780
BB	61-64	149.0 (2)	58,000	48,590	43,880
CA	134,139	94.0	21,470	17,820	16,000
CG	10,11	82.0	19,500	15,300	13,200
CG	16-24	47.5	8,750 (2)	6,020	4,650
CG	26-34	48.5 (2)	8,250	6,310	5,340
CG	47,48	--	--	--	--
CGN	9	86.0	17,530	16,200	15,540
CGN	25	54.0	8,590	8,060	7,800
CGN	35	56.0	9,130	8,590	8,320
CGN	36,37	60.0	10,450	9,290	8,710
CGN	38-41	64.0	10,420	9,220	8,620
CV	34	147.0	45,110	36,720	32,520
CV	41-43	188.0	65,240	53,830	48,130

See introduction to table for footnotes.

Table 2 (b). Characteristics of Auxiliary and Combatant Vessels and Service Craft (1) (Continued)

BROADSIDE WIND AREAS (8) IN SQUARE FEET			FRONTAL WIND AREAS (8) IN SQUARE FEET			COMMENTS (9)
FULLY LOADED	1/3 STORES/ CARGO/ BALLAST	LIGHT	FULLY LOADED	1/3 STORES/ CARGO/ BALLAST	LIGHT	N.V. - NORMAL VESSEL H.D. - HULL DOMINATED S.V. - SPECIAL VESSEL
27,250	30,450	32,050	5,500	5,950	6,200	N.V.
30,050	32,550	33,850	5,000	5,300	5,500	N.V.
36,900	39,900	41,400	5,550	6,000	6,200	N.V.
36,750	41,150	41,500	6,600	6,700	6,750	N.V.
43,150	46,850	48,500	6,550	7,000	7,200	N.V.
43,210	45,480	46,620	6,810	7,120	7,270	N.V.
6,050	6,500	6,750	1,050	1,100	1,150	Nav. Draft ASR-9 & 13, 20.0'; ASR-14,17.01;&ASR-15,23.01;N.V.
8,800	9,300	9,550	4,400	4,500	4,550	Catamarans; S.V.
2,670	2,890	3,000	780	840	870	Former ATR-108,120,140. Wind areas developed from previous edition of DM-26;N.V.
4,200	4,650	4,850	920	1,010	1,050	All former AT of same number; N.V.
--	--	--	--	--	--	Under Construction
8,150	9,250	9,800	2,100	2,200	2,250	N.V.
26,350	28,050	28,850	5,850	6,050	6,150	Former AV-11; N.V.
61,150	64,800	66,700	9,200	9,700	9,950	Former CVT-16 & CVS-16; H.D.
36,750	41,250	43,550	6,850	7,450	7,750	N.V.
28,850	31,100	32,250	3,650	3,900	4,000	N.V.
38,800	41,650	43,050	6,500	6,800	6,950	Former CA-123,136 N.V.
20,050	22,500	23,700	3,400	3,650	3,800	Former DLG-16-24;CG-16 & 17 only Drafts 27.2'(1),20.2', 15.4' & 13.01;N.V.
19,850	21,600	22,500	3,450	3,650	3,750	Former DLG-26-34;Max.Nav. Draft CG-27,27.5';CG-28,33&34,28.5'; CG-29-32,29.5'&CG-26,30.5';N.V.
--	--	--	--	--	--	Under Construction
36,100	36,900	37,350	7,200	7,250	7,300	Former CLGN-160;N.V.
20,900	21,350	21,550	3,230	3,280	3,300	Former DLGN-25;N.V.
22,500	22,900	23,150	3,290	3,340	3,360	Former DLGN-35;N.V.
26,050	27,000	27,450	3,700	3,800	3,850	Former DLGN-36 & 37;N.V.
23,900	24,800	25,200	4,340	4,430	4,480	Former DLGN-38-41;N.V.
59,350	63,200	65,150	8,300	8,800	9,050	Former CVA-34;H.D.
64,550	69,150	71,400	8,700	9,350	9,650	Former CVA-41 & 43; Extreme Breadth CV-41, 183'; CV-43, 156';H.D.

See introduction to table for footnotes.

Table 2 (c). Characteristics of Auxiliary and Combatant Vessels and Service Craft (1)

VESSEL DESIG-NATION	VESSELS IN CLASS (3)	TYPE OF VESSEL
CV	59-62	Aircraft Carrier
CV	63,64,66	Aircraft Carrier
CV	67	Same as Above
CVA	31	Attack Aircraft Carrier
CVN	65	Aircraft Carrier Nuclear Propulsion
CVN	68-71	Same as Above
CVS	11,12,20,38	ASW Aircraft Carrier
DD	743,763,784,785,817,821,822,825, 827,842,862-864,866,871,876,880, 883,886	Destroyer
DD	931,942,944-946,948,950,951	Same as Above
DD	933,937,938,940,941,943	Same as Above
DD	963-992,997	Destroyer
DDG	2-24	Guided Missile Destroyer
DDG	31-34	Same as Above

See introduction to table for footnotes.

Table 2 (c). Characteristics of Auxiliary and Combatant Vessels and Service Craft (1) (Continued)

LENGTHS IN FEET		BREADTHS IN FEET (4)		DRAFTS IN FEET (5)			
OVERALL	AT LOADED WATER-LINE	EXTREME	AT LOADED WATER-LINE	MAXIMUM NAVIGATIONAL	FULLY LOADED	1/3 STORES/ CARGO/ BALLAST	LIGHT
1040.0	990.0	See Comments	130.0	--	S e e	C o m m e n t s	
1048-1073	990.0	See Comments	130.0	See Comments	37.0	31.4	28.6
1073.0	990.0	252.0	130.0	37.0	37.0	31.7	29.1
872.0	820.0	172.0	103.0	31.0	31.0	26.4	24.1
1088.0	1040.0	248.0	133.0	39.0	38.0	34.1	32.2
1088-1115	1056.0	See Comments	134.0	See Comments	38.0	33.5	31.2
889-899	820.0	172.0	103.0	31.0	31.0	26.3	24.0
391.0	383.0	41.0	40.0	19.0-22.0	15.0	12.7	11.5
418.0	407.0	45.0	44.0	21.0	16.0	13.7	12.5
418.0	407.0	45.0	44.0	20.0	16.0	13.7	12.6
564.0	529.0	55.0	55.0	30.0	21.0	18.8	17.7
437.0	420.0	47.0	46.0	See Comments	16.0	13.4	12.0
418.0	407.0	45.0	44.0	See Comments	16.0	13.7	12.6

See introduction to table for footnotes.

Table 2 (c). Characteristics of Auxiliary and Combatant Vessels and Service Craft (1) (Continued)

CLASS	VESSELS IN CLASS (3)	PER IN. IMMERSION IN LONG TONS (6)	DISPLACEMENT IN LONG TONS (7) FULLY LOADED	1/3 STORES/ CARGO/ BALLAST	LIGHT
CV	59-62	230.0	81,150	66,400	59,020
CV	63,64,66	230.0	81,770	66,320	58,600
CV	67	230.0	80,940	66,430	59,180
CVA	31	146.0	43,110	35,000	30,940
CVN	65	252.0	90,950	79,320	73,500
CVN	68-71	252.0	91,490	77,780	70,920
CVS	11,12,20,38	146.0	41,900	33,700	29,600
DD	743,763,784,785,817,821, 822, 825,827,842,862-864, 866,871,876,880,883,886	29.0	3,550	2,740	2,340
DD	931,942,944-946,948,950,951	33.0	4,200	3,270	2,800
DD	933,937,938,940,941,943	33.0	4,140	3,250	2,800
DD	963-992,997	51.0	7,810	6,450	5,770
DDG	2-24	37.0	4,900	3,700	3,100
DDG	31-34	33.0	4,200	3,310	2,860

See introduction to table for footnotes.

Table 2 (c). Characteristics of Auxiliary and Combatant Vessels and Service Craft (1) (Continued)

BROADSIDE WIND AREAS (8) IN SQUARE FEET			FRONTAL WIND AREAS (8) IN SQUARE FEET			COMMENTS (9)
FULLY LOADED	1/3 STORES/ CARGO/ BALLAST	LIGHT	FULLY LOADED	1/3 STORES/ CARGO/ BALLAST	LIGHT	N.V. - NORMAL VESSEL H.D. - HULL DOMINATED S.V. - SPECIAL VESSEL
73,850	79,100	81,750	13,500	14,200	14,550	Former CVA-59-62; Ext. Breadth: CV-59 & 60, 253'; CV-62, 263' & CV-61, 270'; Loaded Draft: CV-60 & 62, 37.0'; CV-59, 38.0'; & CV-61, 41.0'; 1/3 Stores: CV-60&62,31.7';CV-59, 32.7'; & CV-61, 35.7'; Light Draft: CV-60&62, 29.0';CV-59, 30.0'; & CV-61, 33.0';H.D.
79,500	85,050	87,850	13,900	14,650	15,000	Former CVA-63,64,66; Ext. Breadth: CV-66, 252'; CV-63 64, 282'; Max. Nav. Draft: CV-63, 37.0'; CV-64, 40.0'; & CV-66, 38.0';H.D.
75,250	80,500	83,100	15,650	16,350	16,700	Former CVA-67;H.D.
59,350	63,200	65,150	8,300	8,800	9,050	Former CV-31;H.D.
79,000	83,050	85,050	16,950	17,450	17,750	Former CVAN-65;H.D.
79,450	84,150	86,550	14,750	15,350	15,650	Former CVAN-68 & 69; Ext. Breadth: CVN-68, 257'; CVN-69, 252'; & CVN-70,256.5; Max. Nav. Draft: CVN-68,41';CVN-69, 39'; & CVN-70,38.5 ; H.D.
59,700	63,500	65,400	11,950	12,450	12,650	Former CVA-11,12,20,38; Water-line Breadth: CV-12 & 20 only, 101';H.D.
8,800	9,650	10,100	1,250	1,350	1,400	DD-743,817,825,827,829,835,842, 863,871,873,876,880,& 883 All former DDR of same number;N.V.
11,750	12,750	13,200	1,850	1,950	2,000	N.V.
13,050	13,950	14,450	2,100	2,200	2,250	DD-933 only: overall lgth 424'; Max. Nav. Draft, 22.0';N.V.
24,100	25,250	25,850	4,250	4,350	4,400	N.V.
14,750	15,900	16,450	2,900	3,000	3,100	All 21.0' except DDG-8,12,17,19, 22.0';DDG-4,5,7,23.0';DDG-2,3, 10,24.0'; DDG-6,20, 25.0';N.V.
14,450	15,400	15,850	2,120	2,220	2,270	Former DD-936,932,949,947; Max. Nav. Draft: 22.0' except DDG-34, 23.0'; N.V.

See introduction to table for footnotes.

Table 2 (d). Characteristics of Auxiliary and Combatant Vessels and Service Craft (1)

VESSEL DESIG-NATION	VESSELS IN CLASS (3)	TYPE OF VESSEL
DDG	37-46	Guided Missile Destroyer
DDG	47	Same as Above
DDG	993-996	Same as Above
FF	1037,1038	Frigate
FF	1040,1041,1043-1045,1047-1051	Frigate
FF	1052-1097	Same as Above
FF	1098	Same as Above
FFG	1-6	Guided Missile Frigate
FFG	7-49	Same as Above
LCC	19,20	Amphibious Command Ship
LHA	1-5	Amphibious Assault Ship General Purpose
LKA	112	Amphibious Cargo Ship
LKA	113-117	Same as Above
LPA	249	Amphibious Transport
LPD	1-2	Amphibious Transport Dock
LPD	4-15	Same as Above
LPH	2,3,7,9-12	Amphibious Assault Ship

See introduction to table for footnotes.

Table 2 (d). Characteristics of Auxiliary and Combatant Vessels and Service Craft (1) (Continued)

LENGTHS IN FEET		BREADTHS IN FEET (4)		DRAFTS IN FEET (5)			
OVERALL	AT LOADED WATER-LINE	EXTREME	AT LOADED WATER-LINE	MAXIMUM NAVIGATIONAL	FULLY LOADED	1/3 STORES/ CARGO/ BALLAST	LIGHT
513.0	490.0	See Comments	52.0	S e e	C o m m e n t s		
568.0	530.0	55.0	55.0	31.6	20.0	17.3	16.0
--	--	--	--	324	--	--	--
372.0	350.0	41.5	41.0	24.0	15.0	13.3	12.4
415.0	390.0	44.0	44.0	See Comments	17.0	15.1	14.2
438.0	415.0	47.0	47.0	See Comments	16.5 (2)	14.0	12.7
416.0	394.0	44.0	43.0	24.0	17.0 (2)	15.3	14.4
415.0	390.0	44.0	44.0	26.0 (2)	17.0 (2)	15.1	14.2
445.0	408.0	47.0	38.0	24.9	14.4	13.3	12.7
620.0	580.0	See Comments	82.0	30.0	29.0	25.7	24.0
820.0	765.0	118.0	106.0	26.0	26.0	21.3	18.9
564.0	536.0	76.0	76.0	28.0	27.0	20.6	17.4
576.0	550.0	82.0	82.0	28.0	28.0	21.7	18.5
564.0	537.0	76.0	76.0	28.0	26.0	18.9	15.4
522.0	508.0	100.0	84.0	See Comments	23.0	18.7	16.5
570.0	557.0	See Comments	84.0	See Comments	23.0	17.3	14.5
592-602	556.0	84.0	84.0	See Comments	28.0	22.0	19.0

See introduction to table for footnotes.

Table 2 (d). Characteristics of Auxiliary and Combatant Vessels and Service Craft (1) (Continued)

CLASS	VESSELS IN CLASS (3)	PER IN. IMMERSION IN LONG TONS (6)	DISPLACEMENT IN LONG TONS (7) FULLY LOADED	1/3 STORES/ CARGO/ BALLAST	LIGHT
DDG	37-46	43.0	6,120	4,800	4,150
DDG	47	48.5	8,910	7,350	6,570
DDG	993-996	--	--	--	--
FF	1037,1038	24.0	2,730	2,220	1,970
FF	1040,1041,1043-1045, 1047-1051	28.5 (2)	3,580	2,940	2,620
FF	1052-1097	32.5	4,330	3,340	2,850
FF	1098	29.0 (2)	3,660	3,060	2,760
FFG	1-6	28.5	3,600	2,950	2,630
FFG	7-49	30.0	3,590	3,180	2,980
LCC	19,20	--	18,650	13,950	11,600
LHA	1-5	164.0	39,400	30,020	25,330
LKA	112	66.0	17,500	12,410	9,860
LKA	113-117	76.0	18,650	12,880	10,000
LPA	249	66.0	17,550	12,990	10,710
LPD	1-2	85.0	14,670	10,220	8,000
LPD	4-15	85.0	17,240	11,480	8,600
LPH	2,3,7,9-12	75.0	18,830	13,420	10,720

See introduction to table for footnotes.

Table 2 (d). Characteristics of Auxiliary and Combatant Vessels and Service Craft (1) (Continued)

BROADSIDE WIND AREAS (8) IN SQUARE FEET			FRONTAL WIND AREAS (8) IN SQUARE FEET			COMMENTS (9)
FULLY LOADED	1/3 STORES/ CARGO/ BALLAST	LIGHT	FULLY LOADED	1/3 STORES/ CARGO/ BALLAST	LIGHT	N.V. - NORMAL VESSEL H.D. - HULL DOMINATED S.V. - SPECIAL VESSEL
19,950	21,200	21,800	2,650	2,750	2,850	Former DLG-6-15; Ext. Breadth: 52.0' except DDG-37&46, 53.0'; Max. Nav. Draft: All 25.0' except DDG-37,27.0'; loaded draft: All 18.01 except DDG-37, 19.0'; 1/3 stores: All 15.5' except DDG-37, 16.5'; light draft: 14.2' except DDG-37, 15.2';N.V.
26,700	28,100	28,850	5,500	5,650	5,750	N.V.
--	--	--	--	--	--	Under Construction
9,850	10,450	10,750	1,800	1,870	1,900	Former DE-1037,1038;N.V.
11,950	12,700	13,050	2,100	2,200	2,250	Former DE of same number; Max. Nav. draft: All 24.0' except FF-1045,1047,1049, 25.0'; FF-1041, 26.0';N.V.
14,650	15,700	16,200	2,800	2,900	2,950	Former DE of same number; Max. Nav. draft: All 26.5'(1) except FF-1054, 27.5'(1);N.V.
11,500	12,150	12,500	1,900	1,980	2,020	Former AGFF-1;N.V.
12,500	13,200	13,600	2,100	2,200	2,250	Former DEG-1-6;N.V.
15,290	15,730	15,970	2,200	2,230	2,240	Wind areas developed from Jane's; FFG-7-10 only, Former PF of same number;N.V.
34,350	36,280	37,250	6,950	7,220	7,360	Former AGC-19,20; ext. breadth: LCC-19, 108.0'; LCC-20, 102.0';H.D.
71,250	74,950	76,750	10,750	11,250	11,500	H.D.
25,650	29,100	30,800	4,600	5,050	5,300	Former AKA-112;N.V.
30,100	33,550	35,250	6,850	7,400	7,650	Former AKA-113-117;N.V.
29,150	32,150	33,650	5,200	5,600	5,800	Former APA-248,249;N.V.
27,600	29,800	30,850	7,750	8,100	8,300	Max. Nav. draft: LPD-1, 23.0'; LPD-2, 25.0';N.V.
31,100	34,000	35,450	7,700	8,100	8,350	Ext. breadth: LPD-12-14, 100'; LPD-4, 105.0'; LPD-5-8,10,11, 15,108.0'; LPD-9, 115.0'; Max. Nav. draft: All 23.0'; except LPD-9, 27.0'; LPD-6 29.0';N.V.
36,920	40,260	41,920	5,970	6,480	6,730	Max. Nav. draft: All 30.0'; except LPH-10, 28.0'; LPH-2,9, 29.0'; LPH-3, 31.0';H.D.

See introduction to table for footnotes.

Table 2 (e). Characteristics of Auxiliary and Combatant Vessels and Service Craft (1)

VESSEL DESIG-NATION	VESSELS IN CLASS (3)	TYPE OF VESSEL
LSD	28-35	Dock Landing Ship
LSD	36-40	Same as Above
LST	1173,1177,1178	Tank Landing Ship
LST	1179-1198	Same as Above
MSH		Minesweeper Hunter
MSO	427,428-431,433,437-443,446,448,449, 455,456,464,488,489,490,492,509,511	Minesweeper Ocean Non-magnetic
PG	92,93,99,101	Patrol Combatant
PHM	1-6	Patrol Combatant Missile Hydrofoil
SS	565	Submarine
SS	574	Same as Above
SS	576	Same as Above
SS	580-582	Same as Above
SSAG	567	Auxiliary Submarine
SSBN	598-602	Fleet Ballistic Missile Submarine Nuclear
SSBN	608-611,618	Same as Above
SSBN	616,617,619,620,622-636, 640-645,654-659	Same as Above
SSBN	726-733	Same as Above
SSN	571	Submarine Nuclear
SSN	575	Same as Above
SSN	578,579,583,584	Same as Above
SSN	585	Same as Above
SSN	586	Same as Above
SSN	587	Same as Above
SSN	588,590-592	Same as Above
SSN	594-596,603-607,612-615,621	Same as Above
SSN	597	Same as Above

See introduction to table for footnotes.

Table 2 (e). Characteristics of Auxiliary and Combatant Vessels and Service Craft (1) (Continued)

LENGTHS IN FEET		BREADTHS IN FEET (4)		DRAFTS IN FEET (5)			
OVERALL	AT LOADED WATER-LINE	EXTREME	AT LOADED WATER-LINE	MAXIMUM NAVIGATIONAL	FULLY LOADED	1/3 STORES/ CARGO/ BALLAST	LIGHT
510.0	500.0	See Comments	84.0	See Comments	19.0	14.7	12.5
553-562	548.0	84.0	84.0	20.0	20.0	15.9	13.9
445.0	431.0	62.0	62.0	18.0	18.0	14.4	12.6
565.0	507.0	70.0	70.0	See Comments	16.0	12.3	10.5
189.0	177.2	39.0	39.0	13.5	8.8	8.4	8.1
173.0	165.0	35.0	35.0	12.0-14.0	10.0-12.0	8.3-10.3	7.4-9.4
165.0	154.0	24.0	22.0	10.0	6.0 (2)	5.1	4.6
SeeComments	118.0	29.0	25.0	24.0	8.0	7.3	7.0
293.0	290.0	27.0	24.0	17.3	16.8	15.5	14.8
334.0	332.0	30.0	25.0	19.0	18.3 (2)	17.0	16.3
283.0	282.0	27.0	25.0	17.3 (2)	16.8	15.5	14.9
219.0	209.0	29.0	27.0	25.1 (2)	20.6	18.3	17.1
293.0	290.0	27.0	24.0	17.3	16.8	15.5	14.8
382.0	348.0	33.0	25.0	29.0	27.5	25.1	23.9
411.0	378.0	33.0	26.5	31.1 (2)	27.5 (2)	25.5	24.5
421.0	395.0	33.0	25.0	32.0	27.3	25.2	24.1
559.3	500.0	42.0	30.0	36.3	35.4 (2)	31.9	30.1
324.0	320.0	28.0	23.0	25.9(22)	22.1 (2)	20.2	19.3
376.0	370.0	28.0	22.0	23.8(2)	22.3 (2)	21.2	20.5 (2)
263.0	260.0	25.0	20.0	21.4(2)	20.8 (2)	19.7	19.1 (2)
249.0	232.0	32.0	28.0	28.2	25.1 (2)	23.8	23.1 (2)
448.0	445.0	37.0	34.0	24.0	24.0	23.1	22.7
350.0	350.0	26.0	24.0	21.0(2)	21.0 (2)	19-7	19.0
249.0	230.0	32.0	25.0	27.7	25.2	24.0	23.4 (2)
279-297	257-265	32.0	27.0	29.0	25.5	24.2	23.6
273.0	262.0	23.0	19.0	21.0	19.4	15.7	13.9

See introduction to table for footnotes.

Table 2 (e). Characteristics of Auxiliary and Combatant Vessels and Service Craft (1) (Continued)

CLASS	VESSELS IN CLASS (3)	PER IN. IMMERSION IN LONG TONS (6)	DISPLACEMENT IN LONG TONS (7) FULLY LOADED	1/3 STORES/ CARGO/ BALLAST	LIGHT
LSD	28-35	68.0	12,150	8,630	6,880
LSD	36-40	76.0	13,700	9,970	8,100
LST	1173,1177,1178	55.0	7,100	4,740	3,560
LST	1179-1198	57.0	8,520	6,010	4,750
MSH		15.0	454	378	340
MSO	427,428-431,433,437-443, 446,448,449,455,456,464, 448,449,490,492,509,511	10.0	930	720	620
PG	92,93,99,101	6.0	280	230	200
PHM	1-6	6.5	210	180	160
SS	565	12.4 (2)	2,030	1,840	1,740
SS	574	16.0 (2)	2,940 (2)	2,690	2,560 (2)
SS	576	12.4 (2)	2,030 (2)	1,840	1,740 (2)
SS	580-582	10.1 (2)	2,150 (2)	1,880	1,740 (2)
SSAG	567	12.4	2,030	1,840	1,740
SSBN	598-602	14.0	6,030	5,620	5,420
SSBN	608-611,618	17.5 (2)	6,950 (2)	6,530	6,320 (2)
SSBN	616,617,619,620,622-636, 640-645,654-659	17.0	7,350	6,920	6,700
SSBN	726-733	32.1 (2)	16,740 (2)	15,390	14,710 (2)
SSN	571	10.2 (2)	3,570 (2)	3,340	3,230 (2)
SSN	575	16.1	4,400 (2)	4,160	4,040 (2)
SSN	578,579,583,584	9.1 (2)	2,580 (2)	2,450	2,380 (2)
SSN	585	9.0 (2)	3,070 (2)	2,920	2,850 (2)
SSN	586	30.0	5,940	5,630	5,480
SSN	587	--	3,920	3,690	3,570
SSN	588,590-592	9.6 (2)	3,080	2,940	2,870
SSN	594-596,603-607,612-615,621	11.3	4,010	3,840	3,750
SSN	597	7.0	2,610	2,300	2,150

See introduction to table for footnotes.

Table 2 (e). Characteristics of Auxiliary and Combatant Vessels and Service Craft (1) (Continued)

BROADSIDE WIND AREAS (8) IN SQUARE FEET			FRONTAL WIND AREAS (8) IN SQUARE FEET			COMMENTS (9)
FULLY LOADED	1/3 STORES/ CARGO/ BALLAST	LIGHT	FULLY LOADED	1/3 STORES/ CARGO/ BALLAST	LIGHT	N.V. - NORMAL VESSEL H.D. - HULL DOMINATED S.V. - SPECIAL VESSEL
21,150	23,350	24,400	5,600	5,950	6,150	Ext. Breadth: All 84.0’; except LSD-28, 90.0’; Max. Nav. draft: All 19.0’; except LSD-28, 20.01;N.V.
29,150	31,350	32,400	6,950	7,300	7,450	N.V.
15,750	17,300	18,050	2,700	2,900	3,050	N.V.
22,950	24,650	25,450	4,800	5,050	5,200	Max. Nav. draft: All 20.0’; except LST-1198, 21.01;N.V.
1,380	1,515	1,570	745	785	794	Max. Nav. draft is off-cushion, over screws.
4,100	4,400	4,550	1,250	1,310	1,340	All Former AM of same number; N.V.
2,860	3,000	3,070	610	630	640	All Former PGM of same number; N.V.
2,320	2,400	2,440	900	920	930	Overall length 147.0’ with foils raised; N.V.
3,800	4,180	4,380	290	320	340	H.D.
4,350	4,800	5,020	410	450	470	Former LPSS-574;H.D.
3,540	3,900	4,080	290	320	340	H.D.
2,060	2,540	2,780	310	340	350	H.D.
3,800	4,180	4,380	290	320	340	H.D.
2,990	3,830	4,250	400	460	490	SSBN-598-600 Former SSGN-598-600;H.D.
3,810	4,560	4,940	360	410	440	40.5’ breadth at stern planes; H.D.
4,040	4,870	5,280	380	430	460	41.0’ breadth at stern planes; H.D.
6,070	7,860	8,760	450	570	630	SSBN-726 only,former SSBN-1;H.D. 57.4’ breadth at stern planes
3,290	3,850	4,130	310	350	370	H.D.
4,490	4,920	5,130	280	310	320	H.D.
2,170	2,420	2,540	200	220	230	H.D.
1,960	2,250	2,390	250	280	300	H.D.
6,940	7,380	7,580	680	720	730	Former SSRN-586-Areas Jane’s; H.D.
4,740	5,210	5,440	380	410	430	Former SSGN-587-inactive; H.D.
2,100	2,360	2,490	240	270	290	H.D.
1,770	2,080	2,240	180	210	230	SSN-594 only, Former SSGN-594; H.D.
2,050	3,010	3,490	110	180	220	H.D.

Table 2 (f). Characteristics of Auxiliary and Combatant Vessels and Service Craft (1)

VESSEL DESIG-NATION	VESSELS IN CLASS (3)	TYPE OF VESSEL
SSN	637-639,646-653,660-670,672-684, 686,687	Submarine Nuclear
SSN	671	Same as Above
SSN	685	Same as Above
SSN	688-722	Same as Above
IX	306-308,310	Unclassified Miscellaneous
IX	501	Same as Above
IX	502-504	Same as Above
IX	506,507	Same as Above
NR	1	Submersible Research Vehicle
YAG	61	Miscellaneous Auxiliary
YC	306,360,699,705,709,712,713,721,724, 725,728,752,754,756,757,760,764,769, 772,775,781,783,787,789,813,821,823-826,828-833,972,979,980,1056,1058-1060,1062,1065,1068-1071,1073-1077, 1080,1081,1084-1092,1107,1112,1116-1121,1366-1368,1371-1373,1375-1383, 1385,1386,1394,1395,1399,1408-1411, 1419,1446	Open Lighter
YC	688,746,794,799,800,802-805,1406, 1407,1413,1417	Same as Above
YC	695	Same as Above
YC	981,983,984	Same as Above
YC	1027,1029	Same as Above
YC	1273,1275	Same as Above
YC	1321,1323,1324,1327,1328	Same as Above

See introduction to table for footnotes.

Table 2 (f). Characteristics of Auxiliary and Combatant Vessels and Service Craft (1) (Continued)

LENGTHS IN FEET		BREADTHS IN FEET (4)		DRAFTS IN FEET (5)			
OVERALL	AT LOADED WATER-LINE	EXTREME	AT LOADED WATER-LINE	MAXIMUM NAVIGATIONAL	FULLY LOADED	1/3 STORES/ CARGO/ BALLAST	LIGHT
289-303	273-283	32.0	25.0	See Comments	25.8	23.9	23.0
315.0	286.0	33.0	25.0	30.5 (2)	27.7 (2)	26.2	25.4
365.0	340.0	32.0	25.0	30.9 (2)	26.4 (2)	25.2	24.6 (2)
361.0	342.0	33.0	32.1	30.5	27.2	23.3	21.3
177.0	164.0	32.0	32.0	11.0	10.0	7.7	6.6
250.0	226.0	66.0	51.0	13.8	11.0	9.3	8.4
328.0	316.0	50.0	50.0	14.0	--	--	--
125.0	--	36.0	--	--	--	--	--
136.0	128.0	16.0	16.0	15.1 (2)	11.1 (2)	10.5	10.2
194.0	181.0	33.0	33.0	16.0	12.0	9.3	8.0
110.0	110.0	35.0	34.0	8.0	6.0	2.7	1.1
110.0	110.0	31.0	30.0	4.0	4.0	2.0	1.1
140.0	140.0	50.0	49.0	--	6.0	--	--
142.0	142.0	40.0	39.0	7.0	7.0	--	--
150.0	150.0	40.0	39.0	7.0	7.0	--	--
100.0	100.0	40.0	39.0	6.0	6.0	--	--
125.0	125.0	34.0	33.0	6.0	6.0	--	--

See introduction to table for footnotes.

Table 2 (f). Characteristics of Auxiliary and Combatant Vessels and Service Craft (1) (Continued)

CLASS	VESSELS IN CLASS (3)	PER IN. IMMERSION IN LONG TONS (6)	DISPLACEMENT IN LONG TONS (7) FULLY LOADED	1/3 STORES/ CARGO/ BALLAST	LIGHT
SSN	637-639,646-653,660-670, 672-684,686,687	12.0	4,270	4,000	3,860
SSN	671	12.5 (2)	5,290 (2)	5,060	4,950 (2)
SSN	685	16.4 (2)	5,780 (2)	5,540	5,420 (2)
SSN	688-722	17.0	6,930	6,120	5,720
IX	306-308,310	10.0	940	670	530
IX	501	14.0	1,280	990	850
IX	502-504	33.0	3,640	2,670	2,190
IX	506,507	--	--	--	--
NR	1	1.95 (2)	352 (2)	337	330 (2)
YAG	61	10.0	--	--	--
YC	306,360,699,705,709,712, 713,721,724,725,728,752, 754,756,757,760,764,769, 772,775,781,783,787,789, 813,821,823-826,828-833, 972,979,980,1056,1058-1060,1062,1065,1068-1071, 1073-1077,1080,1081,1084-1092,1107,1112,1116-1121, 1366-1368,1371-1373,1375-1383,1385,1386,1394,1395, 1399,1408-1411,1419,1446	9.5	680	310	120
YC	688,746,794,799,800,802-805,1406,1407,1413,1417	7.0	350	180	100
YC	695	--	700	370	200
YC	981,983,984	--	930	390	120
YC	1027,1029	--	1,400	730	400
YC	1273,1275	--	700	370	200
YC	1321,1323,1324,1327,1328	--	690	360	190

Table 2 (f). Characteristics of Auxiliary and Combatant Vessels and Service Craft (1) (Continued)

BROADSIDE WIND AREAS (8) IN SQUARE FEET			FRONTAL WIND AREAS (8) IN SQUARE FEET			COMMENTS (9)
FULLY LOADED	1/3 STORES/ CARGO/ BALLAST	LIGHT	FULLY LOADED	1/3 STORES/ CARGO/ BALLAST	LIGHT	N.V. - NORMAL VESSEL H.D. - HULL DOMINATED S.V. - SPECIAL VESSEL
2,580	3,090	3,340	200	250	270	41.0' Breadth at stern planes. All 29.0' except SSN-661, 30.0'; SSN-672-684 & 686,687, 26.0';H.D.
2,000	2,410	2,610	190	230	250	42.5' Breadth at puff blisters on stabilizers; H.D.
2,480	2,870	3,060	210	240	260	42.0' Breadth at stern planes; H.D.
2,800	4,120	4,780	220	330	390	40.0' Breadth at stern planes; H.D.
5,370	5,710	5,880	410	480	510	IX-306-308, Former FS-221, WLI-299 & AKL-17;N.V.
6,080	6,470	6,660	1,850	1,940	1,980	Former LSMR-501;N.V.
--	--	--	--	--	--	Former APB-39,40 & 37; N.V.
1,530	--	--	740	--	--	Data & Wind Areas Developed from Jane's (Photograph). IX-506 former YFU-82 IX-507 Former YFU-75.
490	570	600	55	60	65	H.D.
3,460	3,900	4,120	840	920	970	Drafts Estimated from Ship's Plans. Former IX-309;N.V. YC-360 Former YFN-360, YC-709 Former YFT-2, YC-1060 Former YVC-1, YC-1117 Former YPK-9, YC-1386 Former BC-167, YC-1384 Former YFNX-17, YC-1399 Former YFN-937,YC-1408-1411 Former U-31 1492-1495,YC-1419 Former U-31 1490.
--	--	--	--	--	--	YC-794 Former YPK-8, YC-1406-1407 Former U-33 1522-1523, YC-1413,1417 Former U-33 1517,1521.
--	--	--	--	--	--	
--	--	--	--	--	--	
--	--	--	--	--	--	
--	--	--	--	--	--	
--	--	--	--	--	--	All Former YCF-98,100,102,107, 108

Table 2 (g). Characteristics of Auxiliary and Combatant Vessels and Service Craft (1) (Continued)

VESSEL DESIG-NATION	VESSELS IN CLASS (3)	TYPE OF VESSEL
YC	1333,1334	Open Lighter
YC	1351,1352,1360,1400-1401	Same as Above
YC	1389,1391	Same as Above
YC	1430-1434,1435,1438-1440,1442-1445, 1450,1458,1461,1464-1468	Same as Above
YC	1469-1497,1499,1500-1504	Same as Above
YC	1447-1449	Same as Above
YC	1451	Same as Above
YC	1509-1515	Same as Above
YC	1523-1545	Open Lighter
YCF	16	Car Float
YCV	8-11,15,16	Aircraft Transportation Lighter
YDT	10	Diving Tender
YDT	14,15	Same as Above
YDT	16	Same as Above
YF	862,866,885	Covered Lighter
YFB	83	Ferryboat or Launch
YFB	87-91	Same as Above

See introduction to table for footnotes.

Table 2 (g). Characteristics of Auxiliary and Combatant Vessels and Service Craft (1) (Continued)

LENGTHS IN FEET		BREADTHS IN FEET (4)		DRAFTS IN FEET (5)			
OVERALL	AT LOADED WATER-LINE	EXTREME	AT LOADED WATER-LINE	MAXIMUM NAVIGATIONAL	FULLY LOADED	1/3 STORES/ CARGO/ BALLAST	LIGHT
112.0	108.0	53.0	48.0	6.0	6.0	--	--
81.0	81.0	27.0	26.0	4.0	4.0	--	--
160.0	160.0	51.0	50.0	8.0	8.0	--	--
120.0	120.0	33.0	33.0	8.0	8.0	--	--
110.0	110.0	32.0	32.0	8.0	6.0	2.7	1.0
130.0	130.0	30.0	30.0	6.0	6.0	--	--
--	--	--	--	--	--	--	--
--	--	--	--	--	--	--	--
--	--	--	--	--	--	--	--
150.0	150.0	34.0	34.0	4.0	4.0	--	--
200.0	180.0	65.0	65.0	8.0	7.0	--	--
81.0	74.0	27.0	26.0	3.0	3.0	--	--
133.0	132.0	31.0	30.0	8.0	8.0(Est)	7.3(Est)	7.0(Est)
261.0	260.0	48.0	48.0	--	--	--	--
133.0	132.0	31.0	30.0	10.0	9.0	--	--
180.0	165.0	46.0	45.0	--	--	--	--
162.0	150.0	59.0	45.0	--	--	--	--

See introduction to table for footnotes.

Table 2 (g). Characteristics of Auxiliary and Combatant Vessels and Service Craft (1) (Continued)

CLASS	VESSELS IN CLASS (3)	PER IN. IMMERSION IN LONG TONS (6)	DISPLACEMENT IN LONG TONS (7) FULLY LOADED	1/3 STORES/ CARGO/ BALLAST	LIGHT
YC	1333,1334	--	850	420	210
YC	1351,1352,1360,1400-1401	--	250	130	70
YC	1389,1391	--	1,400	730	400
YC	1430-1434,1435,1438-1440, 1442-1445,1450,1458,1461, 1464-1468	--	690	320	140
YC	1469-1497,1499,1500-1504	8.5	690	300	110
YC	1447-1449	--	990	--	--
YC	1451	--	--	--	--
YC	1509-1515	--	--	--	--
YC	1523-1545	--	--	--	--
YCF	16	--	420	250	170
YCV	8-11,15,16	--	2,480	1,150	480
YDT	10	--	300	--	--
YDT	14,15	8.0	--	--	--
YDT	16	--	--	--	--
YF	862,866,885	8.0	650	320	160
YFB	83	--	--	--	--
YFB	87-91	8.0	--	--	--

See introduction to table for footnotes.

Table 2 (g). Characteristics of Auxiliary and Combatant Vessels and Service Craft (1) (Continued)

BROADSIDE WIND AREAS (8) IN SQUARE FEET			FRONTAL WIND AREAS (8) IN SQUARE FEET			COMMENTS (9)
FULLY LOADED	1/3 STORES/ CARGO/ BALLAST	LIGHT	FULLY LOADED	1/3 STORES/ CARGO/ BALLAST	LIGHT	N.V. - NORMAL VESSEL H.D. - HULL DOMINATED S.V. - SPECIAL VESSEL
--	--	--	--	--	--	
--	--	--	--	--	--	YC-1351 Former SSS-30J, YC-1352 Former SSS- J, YC-1400-1402 Former YC-1A-3A.
--	--	--	--	--	--	YC-1391 Former BCL-1430.
--	--	--	--	--	--	YC-1435 Former YFN-1169;YC-1438, 1439 Former BC-6677, 6678; YC-1440, 1442-1445,1450,1460 Former BC-6033,6201,6212,6559, 6560,6138,6195; YC-1458,1461, 1462,1464-1468 Former YFN-693, 1226,1227,1229-1233.
740	1,090	1,260	220	330	390	YC-1479 Former BCL-1103;YC-1500--1504 Former YFN-1244-1248;H.D.
--	--	--	--	--	--	YC-1447-1449 Former BC-247, 2814,2820
--	--	--	--	--	--	Former BC-6556
--	--	--	--	--	--	YC-1509,1510 Former BC-6292, 6554; YC-1511 Former YFN-925; YC-1512-1515 Former YC-1-3,12.
--	--	--	--	--	--	YC-1528-1545 Former BC-6111, 6113,6123,6285,6474,6579,6617, 6675,6281,6505,6179,6182,6301, 6140,6180,6131,6478 & 6568.
--	--	--	--	--	--	
--	--	--	--	--	--	
--	--	--	--	--	--	Former YFNG-1
1,880	1,970	2,010	570	590	600	Former YF-294 & 336;N.V.
--	--	--	--	--	--	Former YFNB-43
--	--	--	--	--	--	
--	--	--	--	--	--	
2,920	--	--	1,460	--	--	Former LCU-1636,1638-1640. Wind areas developed from Jane's Photograph (Skewed); N.V.

See introduction to table for footnotes.

Table 2 (h). Characteristics of Auxiliary and Combatant Vessels and Service Craft (1)

VESSEL DESIG-NATION	VESSELS IN CLASS (3)	TYPE OF VESSEL
YFN	260,262,263,266,274,276,278,279,283, 284,299,305-308,640-642,644-652,654, 656-659,691,692,694,697,704,705,707, 717,792-798,800-803,806,814-816,818, 820,821,901,902,905-907,910-911,917, 934,941,945,946,949,952-956,958,959, 962-966,968,970,972,973,978-981,983, 984,988,991,992,1154-1156,1158,1159, 1163	Covered Lighter NSP
YFN	272,311,313,362,364,367-372,375,413, 414,540,1178,1180,1183,1187-1190,1195	Same as Above
YFN	1126,1128-1130	Same as Above
YFN	1173-1177,1191,1194,1196-1200,1202-1206,1208,1211-1214,1217-1223,1239-1243,1250-1253	Same as Above
YFN	1237,1238	Covered Lighter
YFNB	4-6,8,13,19,25,30-32,34-37,39,41,42	Large Covered Lighter
YFND	5,27,29	Drydock Companion Craft
YFNX	4	Lighter Special Purpose
YFNX	7	Same as Above
YFNX	15	Same as Above
YFNX	19	Same as Above
YFNX	20	Same as Above
YFNX	22-26,30-34	Lighter Special Purpose
YFP	3,11,12,14	Floating Power Barge
YFR	888,890	Refrigerated Covered Lighter SP

See introduction to table for footnotes.

Table 2 (h). Characteristics of Auxiliary and Combatant Vessels and Service Craft (1) (Continued)

LENGTHS IN FEET		BREADTHS IN FEET (4)		DRAFTS IN FEET (5)			
OVERALL	AT LOADED WATER-LINE	EXTREME	AT LOADED WATER-LINE	MAXIMUM NAVIGATIONAL	FULLY LOADED	1/3 STORES/ CARGO/ BALLAST	LIGHT
110.0	110.0	35.0	34.0	8.0	8.0	--	--
110.0	110.0	31.0	30.0	--	--	--	--
126.0	117.0	34.0	34.0	6.0	6.0	--	--
110.0	110.0	34.0	34.0	8.0	8.0	--	--
127.0	127.0	35.0	35.0	7.0	--	--	--
261.0	260.0	48.0	48.0	9.5	9.5	5.2	3.0
111.0	102.0	34.0	34.0	8.0	8.0	5.3	3.9
110.0	110.0	35.0	34.0	8.0	8.0	--	--
--	--	--	--	--	--	--	--
--	--	--	--	--	--	--	--
110.0	110.0	35.0	34.0	7.0	7.0	--	--
110.0	110.0	31.0	30.0	4.0	4.0	--	--
110-126	110-126	32-34	32-34	4.0-8.0	3.0-8.0	--	--
110.0	110.0	32-34	32-34	7.0-8.0	7.0-8.0	--	--
133.0	132.0	30.0	30.0	10.0	9.0	--	--

See introduction to table for footnotes.

Table 2 (h). Characteristics of Auxiliary and Combatant Vessels and Service Craft (1) (Continued)

CLASS	VESSELS IN CLASS (3)	PER IN. IMMERSION IN LONG TONS (6)	DISPLACEMENT IN LONG TONS (7) FULLY LOADED	1/3 STORES/ CARGO/ BALLAST	LIGHT
YFN	260,262,263,266,274,276, 278,279,283,284,299,305-308,640-642,644-652,654, 656-659,691,692,694,697, 704,705,707,717,792-798, 800-803,806,814-816,818, 820,821,901,902,905-907, 910-911,917,934,941,945, 946,949,952-956,958,959, 962-966,968,970,972,973, 978-981,983,984,988,991, 992,1154-1156,1158,1159, 1163	--	590	300	160
YFN	272,311,313,362,364,367-372,375,413,414,540,1178, 1180,1183,1187-1190,1195	--	360	190	110
YFN	1126,1128-1130	--	720	390	220
YFN	1173-1177,1191,1194,1196-1200,1202-1206,1208,1211-1214,1217-1223,1239-1243, 1250-1253	--	690	320	140
YFN	1237,1238	--	--	--	--
YFNB	4-6,8,13,19,25,30-32,34-37,39,41,42	26.0	2,700	1,370	700
YFND	5,27,29	8.6	590	310	170
YFNX	4	--	670	340	170
YFNX	7	--	--	--	--
YFNX	15	--	--	--	--
YFNX	19	--	370	200	120
YFNX	20	--	670	340	170
YFNX	22-26,30-34	--	--	--	--
YFP	3,11,12,14	--	690	320	140
YFR	888,890	--	610	400	300

See introduction to table for footnotes.

Table 2 (h). Characteristics of Auxiliary and Combatant Vessels and Service Craft (1) (Continued)

BROADSIDE WIND AREAS (8) IN SQUARE FEET			FRONTAL WIND AREAS (8) IN SQUARE FEET			COMMENTS (9)
FULLY LOADED	1/3 STORES/ CARGO/ BALLAST	LIGHT	FULLY LOADED	1/3 STORES/ CARGO/ BALLAST	LIGHT	N.V. - NORMAL VESSEL H.D. - HULL DOMINATED S.V. - SPECIAL VESSEL
--	--	--	--	--	--	YFN-792 Former YC-792
--	--	--	--	--	--	YFN-540 Former YC-650,YFN-1195 Former U-34 1526.
--	--	--	--	--	--	Former YCF-73,86,87,88. YFN-1173-1177 Former U-32 1504-1506,1497 & 1499; YFN-1191,1194 Former U-32 1509 & 1498.
5,260	6,370	6,930	830	1,040	1,140	YFNB-4-6,8,13 Former YFN-617, 621,622,718,727; YFNB-19 Former YRBN-19; YFNB-25,30-32, 34-37,39,41,42 Former YFN-749, 899,900,1054,1056,1063-1066, 1070;H.D.
1,580	1,860	2,000	480	580	620	Former YFN-268,706,974;H.D.
--	--	--	--	--	--	
--	--	--	--	--	--	
--	--	--	--	--	--	Former YNG-22
--	--	--	--	--	--	Former YC-1356
--	--	--	--	--	--	
--	--	--	--	--	--	YFNX-22 Former BC-6192; YFNX-23-26,30,31 Former YFN-289, 1215,1224,1225,1186,1249; YFNX-32 Former YRBM-7; YFNX-33,34 Former YFN-1192,1209.
--	--	--	--	--	--	YFP-3 Former YC-1114; YFP-11, 12 Former YFN-1207,1216
--	--	--	--	--	--	

See introduction to table for footnotes.

Table 2 (i). Characteristics of Auxiliary and Combatant Vessels and Service Craft (1)

VESSEL DESIG-NATION	VESSELS IN CLASS (3)	TYPE OF VESSEL
YFRN	385,412,997,1235,1256,1257	Refrigerated Covered Lighter SP
YFRT	287,418,451,520,522,523	Covered Lighter SP
YFU	50	Harbor Utility Craft
YFU	71-77,79,81,83	Same as Above
YFU	91,94,97,98,100-102	Same as Above
YGN	69,70,73	Garbage Lighter NSP
YGN	80-83	Same as Above
YHLC	1,2	Salvage Lift Craft, Heavy
YNG	11,17	Gate Craft
YO	47	Fuel Oil Barge SP
YO	106,129,171,174,194,200,202,203,220, 223-225,228,230,241,257,264	Same as Above
YO	153	Same as Above
YOG	58,68,78,79,87,88,93,196	Gasoline Barge SP
YOGN	8-10,26	GasolIne Barge NSP
YOGN	110,111,113-115,122-125	Same as Above
YON	1,2	Fuel Oil Barge NSP
YON	80,81,84-88	Same as Above
YON	90,91,96-98,100-102,235	Same as Above
YON	239	Same as Above
YON	255,256	Same as Above
YON	258,260-262,265,269,271-275,280-295	Same as Above
YON	305,306	Same as Above
YOS	8,10-12,15-17,20	Oil Storage Barge
YOS	21,23,24,28,33	Same as Above
YOS	34	Fuel Oil Barge NSP

See introduction to table for footnotes.

Table 2 (i). Characteristics of Auxiliary and Combatant Vessels and Service Craft (1) (Continued)

LENGTHS IN FEET		BREADTHS IN FEET (4)		DRAFTS IN FEET (5)			
OVERALL	AT LOADED WATER-LINE	EXTREME	AT LOADED WATER-LINE	MAXIMUM NAVIGATIONAL	FULLY LOADED	1/3 STORES/ CARGO/ BALLAST	LIGHT
150-153	150-152	35.0	34.0	7.0-10.0	7.0-10.0	--	--
133.0	132.0	30.0	30.0	9.0	9.0	6.6	5.4
119.0	105.0	35.0	34.0	6.0	4.0	--	--
125.0	--	36.0	--	--	--		
--	--	--	--	--	--	--	--
120.0	112.0	35.0	34.0	9.0	9.0	--	--
124.0	124.0	35.0	35.0	--	--	--	--
--							
110.0	100.0	34.0	34.0	4.0	4.0	--	--
235.0	227.0	37.0	37.0	15.0	15.0	9.4	6.6
174.0	170.0	33.0	32.0	13.0	13.0	7.7	5.1
156.0	150.0	30.0	30.0	12.0	12.0	7.9	5.9
174.0	170.0	33.0	32.0	13.0	13.0	7.7	5.1
165.0	165.0	35.0	35.0	8.0	8.0	--	--
165.0	165.0	42.0	42.0	8.0	8.0	4.1	2.2
87.0	86.0	28.0	27.0	7.0	7.0	--	--
174.0	173.0	40.0	39.0	8.0	8.0	3.3	1.0
165.0	165.0	35.0	35.0	8.0	8.0	--	--
100.0	81.0	40.0	40.0	7.0	7.0	--	--
120.0	--	33.0	--	--	--	--	--
165.0	--	40.0	40.0	8.0	8.0	--	--
--	--	--	--	--	--	--	--
80.0	80.0	34.0	32.0	5.0	5.0	--	--
110.0	110.0	34.0	34.0	9.0	9.0	--	--
--	--	--	--	--	--	--	--

See introduction to table for footnotes.

Table 2 (i). Characteristics of Auxiliary and Combatant Vessels and Service Craft (1) (Continued)

CLASS	VESSELS IN CLASS (3)	PER IN. IMMERSION IN LONG TONS (6)	DISPLACEMENT IN LONG TONS (7) FULLY LOADED	1/3 STORES/ CARGO/ BALLAST	LIGHT
YFRN	385,412,997,1235,1256, 1257	--	690-860	340-520	170-350
YFRT	287,418,451,520,522,523	8.0	650	420	300
YFU	50	--	360	230	160
YFU	71-77,79,81,83	--	380	270	220
YFU	91,94,97,98,100-102	--	--	--	--
YGN	69,70,73	--	500	290	180
YGN	80-83	--	860	490	310
YHLC	1,2				
YNG	11,17	--	230	150	110
YO	47	17.0	2,660	1,520	950
YO	106,129,171,174,194,200, 202,203,220,223-225,228, 230,241,257,264	10.0	1,390	760	440
YO	153	10.0	1,100	610	370
YOG	58,68,78,79,87,88,93,196	10.0	1,390	760	440
YOGN	8-10,26	--	1,270	570	220
YOGN	110,111,113-115,122-125	16.0	1,360	610	240
YON	1,2	--	400	250	170
YON	80,81,84-88	15.0	1,460	620	200
YON	90,91,96-98,100-102,235	--	1,270	570	220
YON	239	--	1,040	460	170
YON	255,256	--	760	370	180
YON	258,260-262,265,269, 271-275,280-295	--	1,500	680	270
YON	305,306	--	--	--	--
YOS	8,10-12,15-17,20	--	290	140	70
YOS	21,23,24,28,33	--	690	320	140
YOS	34	--	--	--	--

See introduction to table for footnotes.

Table 2 (i). Characteristics of Auxiliary and Combatant Vessels and Service Craft (1) (Continued)

BROADSIDE WIND AREAS (8) IN SQUARE FEET			FRONTAL WIND AREAS (8) IN SQUARE FEET			COMMENTS (9)
FULLY LOADED	1/3 STORES/ CARGO/ BALLAST	LIGHT	FULLY LOADED	1/3 STORES/ CARGO/ BALLAST	LIGHT	N.V. - NORMAL VESSEL H.D. - HULL DOMINATED S.V. - SPECIAL VESSEL
--	--	--	--	--	--	YFRN-385,412,997 Former YF-385, 412,997; YFRN-1235 Former BR-6435; YFRN-1256,1257 Former BRM-6234, 6238.
1,820	2,140	2,300	610	680	720	YFRT-287,418,523 Former YF-287, 418,852;YFRT-522 Former T-441; H.D.
--	--	--	--	--	--	Former LCU-1486
1,530	--	--	740	--	--	Areas Developed from Jane's Photo
--	--	--	--	--	--	Former LCU-1608,1488,1611,1615, 1610,1612,1642
--	--	--	--	--	--	YGN-69 Former YC-1338; YGN-70 Former YD-1
--	--	--	--	--	--	
--	--	--	--	--	--	
--	--	--	--	--	--	
3,730	5,000	5,630	1,070	1,270	1,380	N.V.
2,520	3,380	3,820	610	780	860	YO-241,257,264 Former YOG-5,72, 105;N.V.
--	--	--	--	--	--	
2,520	3,380	3,820	610	780	860	YOG-196 Former YO-196;N.V.
--	--	--	--	--	--	
--	--	--	--	--	--	YOGN-110,111,113-115 Former U-30 1472,1473,1475,1479,1468 YOGN-122 Former BG-8452;YOGN-123 Former YON-252; YOGN-124 Former BG-6383; YOGN-125 Former YWN-154
--	--	--	--	--	--	YON-2 Former BK-4111
--	--	--	--	--	--	
--	--	--	--	--	--	YON-235 Former YW-73
--	--	--	--	--	--	
--	--	--	--	--	--	Former BG-6224,6225
--	--	--	--	--	--	YON-265 Former YOGN-11; YON-268 Former BK-1188; YON-290 Former BG-6457.
--	--	--	--	--	--	Former BG-6223 & 6228
--	--	--	--	--	--	
--	--	--	--	--	--	YOS-28 Former YC-707; YOS-33

						Former YSR-46.
--	--	--	--	--	--	Former OB-6228

See introduction to table for footnotes.

Table 2 (j). Characteristics of Auxiliary and Combatant Vessels and Service Craft (1)

VESSEL DESIG-NATION	VESSELS IN CLASS (3)	TYPE OF VESSEL
YP	654-672	Patrol Craft
YP	673-675	Same as Above
YPD	32,37,41,42,45,46	Floating Pile Driver
YR	9	Floating Workshop
YR	24-27,29,35,36,38,44,46,59,60,63-65,67,68,70,73,76-78	Same as Above
YR	50	Same as Above
YR	83,84,85	Same as Above
YRB	1,2	Repair & Berthing Barge
YRB	22,25	Same as Above
YRBM	1-6,8,9,11-15	Repair, Berthing, and Messing Barge NSP
YRBM	20	Same as Above
YRBM	23-30	Same as Above
YRBM	31-36	Same as Above
YRDH	1,6,7	Floating Drydock Work-shop Hull
YRDH	2	Same as Above
YRDM	1,2,5,7	Floating Drydock Work-shop Machinery
YRR	1	Radiological Repair Barge
YRR	2,5-14	Same as Above
YRR	3	Same as Above
YRR	4	Same as Above
YRST	1,2	Salvage Craft Tender NSP
YRST	3,6	Same as Above
YRST	5	Same as Above
YSD	15,39,53,63,74,77	Seaplane Wrecking Derrick
YSR	4,6,7	Sludge Removal Barge
YSR	11,17-20,23,27-29	Same as Above
YSR	25,26	Sludge Removal Barge
YSR	30-33,37,38-40,45	Same as Above
YTB	752,753,756-759,762-771,774-836	Large Harbor Tug
YTB	760,761	Same as Above

See introduction to table for footnotes.

Table 2 (j). Characteristics of Auxiliary and Combatant Vessels and Service Craft (1) (Continued)

LENGTHS IN FEET		BREADTHS IN FEET (4)		DRAFTS IN FEET (5)			
OVERALL	AT LOADED WATER-LINE	EXTREME	AT LOADED WATER-LINE	MAXIMUM NAVIGATIONAL	FULLY LOADED	1/3 STORES/ CARGO/ BALLAST	LIGHT
81.0	77.0	18.0	17.0	5.0	5.0	--	--
104-111	104-110	31-46	31-46	8.0	7.0	6.3	6.0(Est)
--	--	--	--	--	--	--	--
261.0	260.0	48.0	48.0	9.0	9.0	--	--
153.0	150.0	36.0	34.0	6.0	6.0	4.9	4.3
153.0	150.0	43.0	42.0	6.0	6.0	4.5	3.7
111.0	110.0	31.0	31.0	4.0	4.0	--	--
111.0	98.0	30.0	30.0	4.0	4.0	--	--
110.0	110.0	34.0	34.0	4.0	4.0	--	--
110-112	92.0	36.0	34.0	4.0	4.0	3.3	3.0
261.0	260.0	48.0	48.0	9.0	9.0	--	--
146.0	146.0	46.0	46.0	4.0	4.0	--	--
--	--	--	--	--	--	--	--
150.0	--	--	34.0	6.0	6.0	4.7	4.0
--	--	--	--	--	--	--	--
150.0	--	--	34.0	6.0	6.0	4.5	3.8
150.0	150.0	43.0	42.0	7.0	7.0	5.5	4.7
150-153	150.0	36.0	34.0	6.0	6.0	4.5	3.7
110.0	110.0	35.0	34.0	8.0	6.0	3.0	1.5
150.0	150.0	32.0	32.0	4.0	4.0	--	--
261.0	260.0	48.0	48.0	9.0	9.0	--	--
110.0	100.0	35.0	34.0	4.0-6.0	4.0-6.0	--	--
124.0	--	61.0	--	4.0	4.0	--	--
104.0	100.0	31.0	30.0	4.0	4.0	3.7	3.6
95.0	94.0	31.0	30.0	7.0	7.0	--	--
80.0	69.0	32.0	32.0	5.0	5.0	3.1	2.2
94.0	94.0	30.0	30.0	7.0	7.0	--	--
110.0	102.0	34.0	34.0	9.0	7.0	3.1	1.2
101-109	100-107	29-31	25-31	14.0-16.0	13.0	--	--
85.0	82.0	24.0	23.0	11.0	11.0	--	--

See introduction to table for footnotes.

Table 2 (j). Characteristics of Auxiliary and Combatant Vessels and Service Craft (1) (Continued)

CLASS	VESSELS IN CLASS (3)	PER IN. IMMERSION IN LONG TONS (6)	DISPLACEMENT IN LONG TONS (7) FULLY LOADED	1/3 STORES/ CARGO/ BALLAST	LIGHT
YP	654-672	--	67	59	55
YP	673-675	--	--	--	--
YPD	32,37,41,42,45,46	12.0	590-680	270-590	110-540
YR	9	--	2,700	1,370	700
YR	24-27,29,35,36,38,44,46, 59,60,63-65,67,68,70,73, 76-78	11.0	760	610	530
YR	50	14.0	990	730	600
YR	83,84,85	--	250	180	140
YRB	1,2	--	--	--	170
YRB	22,25	--	290	--	--
YRBM	1-6,8,9,11-15	7.0	310	260	230
YRBM	20	--	2,700	1,370	700
YRBM	23-30	--	590	530	500
YRBM	31-36	--	--	--	--
YRDH	1,6,7	11.2	750	540	480
YRDH	2	--	--	--	--
YRDM	1,2,5,7	11.1	750	560	460
YRR	1	14.0	990	730	600
YRR	2,5-14	11.0	760	560	460
YRR	3	8.0	590	300	160
YRR	4	--	700	440	310
YRST	1,2	--	2,700	1,370	700
YRST	3,6	--	230-670	150-340	110-170
YRST	5	--	--	--	500
YSD	15,39,53,63,74,77	6.0	270	250	240
YSR	4,6,7	--	300	150	80
YSR	11,17-20,23,27-29	6.0	360	230	160
YSR	25,26	--	530	--	--
YSR	30-33,37,38-40,45	8.0	790	420	230
YTB	752,753,756-759,762-771, 774-836	--	410	320	270
YTB	760,761	--	--	--	--

See introduction to table for footnotes.

Table 2 (j). Characteristics of Auxiliary and Combatant Vessels and Service Craft (1) (Continued)

BROADSIDE WIND AREAS (8) IN SQUARE FEET			FRONTAL WIND AREAS (8) IN SQUARE FEET			COMMENTS (9)
FULLY LOADED	1/3 STORES/ CARGO/ BALLAST	LIGHT	FULLY LOADED	1/3 STORES/ CARGO/ BALLAST	LIGHT	N.V. - NORMAL VESSEL H.D. - HULL DOMINATED S.V. - SPECIAL VESSEL
1,160	--	--	290	--	--	Wind Areas Developed from Jane's Photograph; N.V.
--	--	--	--	--	--	
2,350	2,420	2,460	1,890	1,920	1,940	YPD-32,45 Former YC-820,1498; YPD-46 Former YFNB-35;N.V.
--	--	--	--	--	--	Former YFNB-9
3,700	3,870	3,950	880	920	940	H.D.
--	--	--	--	--	--	
--	--	--	--	--	--	YR-83 Former YRL-5; YR-84,85 Former FMS-6,782.
--	--	--	--	--	--	YRB-1 Former YFN-258
--	--	--	--	--	--	Former YC-1079 & YFN-298
3,240	3,300	3,330	970	990	1,000	H.D.
--	--	--	--	--	--	Former YFNB-26
--	--	--	--	--	--	
--	--	--	--	--	--	Under Construction
--	--	--	--	--	--	YRDH-1 Former YR-55
--	--	--	--	--	--	Former YR-56
--	--	--	--	--	--	YRDM-1 & 2 Former YR-52 & 53
--	--	--	--	--	--	Former YR-49
--	--	--	--	--	--	YRR-2,6-10 Former YR-74,30-32, 47,79;YRR-5,13,14 Former YRDM-8 3,4; YRR-11,12 Former YRDH-3,4.
--	--	--	--	--	--	Former YFN-333
--	--	--	--	--	--	Former YFN-685
--	--	--	--	--	--	Former YDT-11,12
--	--	--	--	--	--	YRST-3 Former YDT-13; YRST-6 Former YFNX-10.
--	--	--	--	--	--	Former YFNX-13
--	--	--	--	--	--	
--	--	--	--	--	--	
--	--	--	--	--	--	
--	--	--	--	--	--	
1,300	1,650	1,820	390	520	590	YSR-45 Former BC-6090;N.V.
1,790	--	--	560	--	--	Areas Developed from Jane's Photograph (Very Skewed); N.V.
--	--	--	--	--	--	

Table 2 (k). Characteristics of Auxiliary and Combatant Vessels and Service Craft (1)

VESSEL DESIG-NATION	VESSELS IN CLASS (3)	TYPE OF VESSEL
YTL	422,434,438,439,550,583,588,591, 594,602	Small Harbor Tug
YTM	146,149,151,176,178,180,189,252,265, 268,359,364,366,380-383,391-395,397-400,403-406,413,415,417,496,521-524, 526,527,534,536,542-549,701-702,704	Medium Harbor Tug
YTM	748,768,770,776,777,779	Same as Above
YTM	760,761	Same as Above
YW	83,86,98,101,108,113,119,123,126-128	Water Barge SP
YWN	70,71,78,79,82	Water Barge NSP
YWN	147	Same as Above
YWN	156	Same as Above

See introduction to table for footnotes.

Table 2 (k). Characteristics of Auxiliary and Combatant Vessels and Service Craft (1) (Continued)

LENGTHS IN FEET		BREADTHS IN FEET (4)		DRAFTS IN FEET (5)			
OVERALL	AT LOADED WATER-LINE	EXTREME	AT LOADED WATER-LINE	MAXIMUM NAVIGATIONAL	FULLY LOADED	1/3 STORES/ CARGO/ BALLAST	LIGHT
66.0	62.0	18.0	17.0	8.0	6.0	--	--
100-102	89-96	24-28	24-25	10.0-11.0	--	--	--
101-107	96.0	27-28	25.0	12.0	12.0	--	--
85.0	82.0	24.0	23.0	--	--	--	--
174.0	170.0	33.0	32.0	13.0	13.0	7.7	5.1
165.0	165.0	35.0	35.0	8.0	--	--	--
86.0	86.0	20.0	--	7.0	--	--	--
120.0	-	33.0	--	--	--	--	--

See introduction to table for footnotes.

Table 2 (k). Characteristics of Auxiliary and Combatant Vessels and Service Craft (1) (Continued)

CLASS	VESSELS IN CLASS (3)	PER IN. IMMERSION IN LONG TONS (6)	DISPLACEMENT IN LONG TONS (7) FULLY LOADED	1/3 STORES/ CARGO/ BALLAST	LIGHT
YTL	422,434,438,439,550,583, 588,591,594,602	--	80	73	70
YTM	146,149,151,176,178,180, 189,252,265,268,359,364, 366,380-383,391-395,397-400,403-406,413,415,417, 496,521-524,526,527,534, 536,542-549,701-702,704	4.0	300-340	240-290	210-260
YTM	748,768,770,776,777,779	--	350-390	290-330	260-300
YTM	760,761	--	210	180	160
YW	83,86,98,101,108,113,119, 123,126-128	10.0	1,390	760	440
YWN	70,71,78,79,82	--	1,270	570	220
YWN	147	--	250	130	70
YWN	156	--	760	370	170

See introduction to table for footnotes.

Table 2 (k). Characteristics of Auxiliary and Combatant Vessels and Service Craft (1) (Continued)

BROADSIDE WIND AREAS (8) IN SQUARE FEET			FRONTAL WIND AREAS (8) IN SQUARE FEET			COMMENTS (9)
FULLY LOADED	1/3 STORES/ CARGO/ BALLAST	LIGHT	FULLY LOADED	1/3 STORES/ CARGO/ BALLAST	LIGHT	N.V. - NORMAL VESSEL H.D. - HULL DOMINATED S.V. - SPECIAL VESSEL
--	--	--	--	--	--	YTL-422,431,434,435,438,439 Former YT of same number
2,630	--	--	860	--	--	All YTB of same number. Wind Areas developed from Jane's Photograph (Slightly Skewed)
--	--	--	--	--	--	YTM-748 Former LT-2078; YTM-768,770,776,777,779 Former YTB-502,507,513,514,516
--	--	--	--	--	--	Former YTB-772 & 773
2,520	3,380	3,820	610	780	860	N.V.
--	--	--	--	--	--	
--	--	--	--	--	--	Former BG-3640
--	--	--	--	--	--	Former BG-6089

See introduction to table for footnotes.

Table 2. Appendix Auxiliary and Combatant Vessels Anchor Chain

Table 2 Vessel Group	Anchor Chain Size & Type	Table 2 Vessel Group	Anchor Chain Size & Type	Table 2 Vessel Group	Anchor Chain Size & Type
AD 14, 15, 17-19	2-$\frac{3}{4}$ Stand	BB 61-64	3-3/8 Stand	FF 1098	1-$\frac{1}{2}$ HS
AD 24,26,36	2-3/8 Stand	CA 134,139	2-$\frac{3}{4}$ HD	FFG 1-6	1-$\frac{1}{2}$ HS
AD 37,38,41-43	3-$\frac{1}{2}$ HD	CG 10,11	2-$\frac{3}{4}$	LCC 19,20	3 Stand
AE 21-25	2-5/8 Stand	CG 26-34	2 Stand	LHA 1-5	3-$\frac{1}{2}$ Stud
AE 26-29, 32-35	3 Stand	CGN 25	2-$\frac{1}{4}$ Stand	LKA 113-117	2-$\frac{3}{4}$ HD
AF 58	2-$\frac{1}{2}$ Stud	CGN 35	2 Stand	LPA 249	2-7/16
AFS 1-7	2-$\frac{3}{4}$ HD	CGN 38-41	2-1/8 Stand	LPD 1-2,4-15	2-$\frac{3}{4}$ HD
AGDS 2	2-5/8 Stud	CV 41,43	3-$\frac{1}{2}$ HD	LPH 2,3,7,9-12	2-$\frac{3}{4}$ HD
AGOR 16	2-1/16 Stud	CV 59-62	4-$\frac{3}{4}$ Stand	LSD 28-35,36-40	2-$\frac{3}{4}$ HD
AGS 28	1	CV 63,64,66,67	4-$\frac{3}{4}$ Stand	LST 1173,1177,1178	2-$\frac{1}{4}$ Stand
AGSS 555	1-$\frac{1}{2}$ Nylon	CVA 31	4-$\frac{3}{4}$ Stand	LST 1179-1198	2-$\frac{3}{4}$ Stand
AGSS 569	$\frac{3}{4}$ Stud	CVN 65,68-70	4-$\frac{3}{4}$ Stand	MSO 427, 428-431	(All MSO Listed
AO 143-148	2-$\frac{3}{4}$ HD	CVS 11,12,20,38	3-3/8 Stand	MSO 433, 437-443	Are 1-1/8 Hadfield)
AOE 1-4	3-3/8 Stand	DD 743,763,784,785	1-$\frac{1}{4}$ Stand	MSO 446,448,449	
AOR 1-7	3-$\frac{1}{4}$ Stand	DD 817,821,822,825	1-$\frac{1}{4}$ Stand	MSO 455,456,464	
AP 110,117,119	2-5/8 Stand	DD 827,842,862-864	1-$\frac{1}{4}$ Stand	MSO 488,489,490	
AR 5-8	2-$\frac{3}{4}$ Stand	DD 866,871,876,880	1-$\frac{1}{4}$ Stand	MSO 492,509,511	
ARC 3	2-$\frac{1}{4}$ Stand	DD 883,886	1-$\frac{1}{4}$ Stand	PG 92,93,99,101	$\frac{3}{4}$ Stand
ARL 24	1-$\frac{1}{4}$ Stand	DD 931,942,944-946	1-3/8	SS 565,574,576	$\frac{3}{4}$ Stand

Notes: Chain is U.S. Navy Di-Lok unless otherwise specified, and its type, where given, is Standard (STAND.), Heavy Duty (H.D.), or High Strength (H.S.). Chain sizes and types for specific Naval vessels not included in the table may be obtained from Naval Sea Systems Command, Deputy Commander for Ship Design and Engineering, Hull Systems Sub-Group, Deck and Replenishment Systems Division.

Table 2. Appendix Auxiliary and Combatant Vessels Anchor Chain

Table 2 Vessel Group	Anchor Chain Size & Type	Table 2 Vessel Group	Anchor Chain Size & Type	Table 2 Vessel Group	Anchor Chain Size & Type
ARS 6,8,21,23	1-5/8 Stand	DD 948,950,951	1-3/8	SS 580-582	$\frac{3}{4}$ Stand
ARS 25,34,38-43	1-5/8 Stand	DD 933,937,938	1-3/8	SSBN 598-602	$\frac{3}{4}$ Stand
AS 11,12,15-19	2-$\frac{3}{4}$	DD 940,941,943	1-3/8	SSBN 608-611,618	1
AS 31,32	3-3/8 Stand	DD 963-992	1-7/8 Stand	SSBN 616,617,619	1 Stand
AS 33,34	3 HD	DDG 2-24	1-3/8 HS	SSBN 620, 622-636	1 Stand
AS 36,37,39-41	3-$\frac{1}{2}$ HD	DDG 31-34	1-3/8	SSBN 640-645	1 Stand
ASR 9,13-15	1-$\frac{1}{2}$	DDG 37-46	1-5/8 HS	SSBN 654-659	1 Stand
ASR 21,22	1-$\frac{1}{2}$ HS	FF 1037,1038,1040	1-$\frac{1}{2}$ HS	SSN 575,578,579	$\frac{3}{4}$
ATA 181, 193,213	1-$\frac{1}{4}$ Stud	FF 1041,1043-1045	1-$\frac{1}{2}$ HS	SSN 583,584,585	$\frac{3}{4}$
ATS 1-3	1-5/8	FF 1047-1051	1-$\frac{1}{2}$ HS	SSN 586	1-1/8
AVM 1	2-5/8 Stand	FF 1052-1097	1-5/8 HS	SSN 587	7/8
				SSN 588,590-592	$\frac{3}{4}$
				SSN 594-597, 603-607	$\frac{3}{4}$
				SSN 612-615,621	$\frac{3}{4}$

Notes: Chain is U.S. Navy Di-Lok unless otherwise specified, and its type, where given, is Standard (STAND.), Heavy Duty (H.D.), or High Strength (H.S.). Chain sizes and types for specific Naval vessels not included in the table may be obtained from Naval Sea Systems Command, Deputy Commander for Ship Design and Engineering, Hull Systems Sub-Group, Deck and Replenishment Systems Division.

2. Floating Drydock Characteristics. Table 3 presents data that distinguishes the various type of floating drydocks on the basis of their physical and functional attributes. As was done for ships, drydocks with similar characteristics are grouped together into one class. Distinctions between drydocks and between the vacant and occupied states of a given drydock can occur in the following categories:

a. Type of construction. Hoe a drydock is fabricated or assembled is a major distinguishing characteristic. The types include one-piece construction, multi piece construction, and multiple pontoon sections.

b. Construction material. The materials used to fabricate the majority of the structural components of drydocks include steel, concrete, timber, and combinations of these materials.

c. Drydocked vessel. Each drydock has physical restrictions on the maximum vessel size it can accommodate. Footnote 3 explains the rationale for selecting the vessel and listing its designation in the table.

d. Service state. A drydock manifests different presentment areas when it is occupied, vacant, and submerged. For presentment areas of occupied drydocks (maximum-sized vessel on the blocks), the areas were calculated to include the areas of the drydock’s structure plus the areas of components of the vessel on blocks which protrude outside the profile of the drydock.

e. Type of wind load response. Categorizing a drydock as a "hull-dominated" or "normal" vessel is a function of the ship on the blocks. Generally, when there is no ship in the drydock, it behaves much like a hull-dominated vessel; but when a ship’s superstructure protrudes outside of the profile of the drydock, the effect is such that the drydock responds as a "normal" vessel. (See footnote (2) of Table 3).

Table 3. Characteristics of Floating Drydocks [1]

DOCK DESIGNATION	DOCKS IN CLASS	TYPE OF DOCK	COMMENTS[2]	MAXIMUM VESSEL ON BLOCK[3]	LIFTING CAPACITY IN LONG TONS[4]
AFDB	1	large auxiliary floating drydock	5 Pontoon sections-steel former ABSD-1	AK-277	45,000
AFDB	2	same as above	10 Pontoon sections-steel former ABSD-2	LHA-1	90,000
AFDB	3	same as above	9 Pontoon sections-steel former ABSD-3	LHA-1	81,000
AFDB	4,5	same as above	7 Pontoon sections-steel former ABSD-4,5	LHA-1	55,000
AFDB	7	same as above	4 Pontoon sections-steel former ABSD-7	SSBN-616	32,250
AFDL	1,2,6,8-12,15,16, 19,21,23,25,29	small auxiliary floating drydock	1 piece steel-former AFD class; 1,6,10,23 Navy; 2,8,9,12,15,16, 19,21,29 leased private enterprise; 11,20,22,25 loaned foreign govt's.	MSO-509	1,000
AFDL	7,22,23	same as above	1 piece steel-former AFD class; 7,23 Navy;22 loaned foreign govt.	AGOR-7	1,900
AFDL	37,38,40,41,44,45	same as above	1 piece concrete-former ARDC-4,5,7,8,11,12-all leased to private enterprise except AFDL-44 loaned foreign govt.	DD-718	2,800
AFDL	47	same as above	1 piece steel-former ARD-33-leased to private enterprise	DDG-37	6,500
AFDL	48	same as above	1 piece concrete	DDG-31	4,000
AFDM	1,2	medium aux. floating drydock	3 piece steel-former YFD-3,4-leased to private enterprise	AFS-1	15,000
AFDM	3,5-10	same as above	3 piece steel-former YFD-6,21, 62-65,67;5-8 Navy;3,9,10 leased to private enterprise	AS-36	18,000
ARD	5,7,8	auxiliary repair drydock	1 piece steel-5,7 Navy; 8 loaned to foreign govt.	DD-718	3,500
ARD-ARDM	ARD-12,30,32; ARDM-1,2	same as above	1 piece steel-ARDM-1,2 former ARD-19,26; all Navy except 12, 32 loaned foreign govt's.	ARL-24	3,500
ARDM	3	medium aux. repair drydock	1 piece steel-former ARD-18	DDG-31	5,500
ARDM	4	same as above	1 piece steel	DD-963	7,800
YFD	8	yard floating drydock	6 section timber-priv.ent.	LKA-113	20,000
YFD	23	same as above	6 section timber-priv. ent.	LST-1179	10,500
YFD	54	same as above	1 piece timber-priv. ent.	AGS-29	5,000
YFD	68-71	same as above	3 piece steel-71 Navy;68-70 P.E.	AFS-1	14,000
YFD	83	same as above (former AFDL-31)	1 piece steel - loaned Coast Guard	MSO-509	1,000

[1] Floating drydock characteristics were obtained from the following sources: Chapter 3, floating drydocks, clearances, and general data, NAVDOCKS DM-29(5), Change 3, May 1965 issue (this chapter has been deleted from the present issue of NAVFAC DM-29); the previous edition of NAVFAC DM-26, Chapter 7, Table 7-7; and from inquiries made by the Waterfront Section of the Naval Facilities Engineering Command regarding ARDM-4.

[2] All floating drydocks listed in the above table shall be considered to be hull-dominated for the maximum submergence and light draft conditions without the maximum vessel on blocks. With the maximum vessel on blocks all drydocks shall be considered to be normal vessels for computing the longitudinal wind force loading components, except for AFDB-2,3,4,5, and 7 with LHA-1 or SSBN-616 on the blocks. These docks remain hull-dominated with these vessels on the blocks.

[3] Vessels for drydocking were primarily selected on the basis of maximum wind presentment areas and not displacements. The exception to this rule is the drydocking of SSBN-616 in AFDB-7. Vessel characteristics were obtained from the sources listed in footnote (1) of Table 2.

[4] In almost all cases, the displacement of each drydock with maximum vessel on blocks was derived from the design stability curves for each class of dock.

Table 3. Characteristics of Floating Drydocks [1] (Continued)

LENGTHS IN FEET			BREADTHS IN FEET		DEPTHS IN FEET		DRAFT IN FEET				
OVERALL, INCLUDING OUTRIGGERS	ON PONTOON OR PONTOONS	OVER BLOCKS	EXTREME	CLR.WIDTH INSIDE WINGWALLS	OVERALL	PONTOON OR PONTOONS	MAXIMUM SUBMERGENCE	OVER BLOCKS	VESSEL IN DOCK	LIGHT	TONS PER IN. IMMERSION IN LONG TONS
512.0	412.0	410.5	256.0	133.6	84.0	28.0	78.0	46.0	26.5	9.0	200.0
927.0	827.0	825.5	256.0	133.6	84.0	28.0	78.0	46.0	26.5	9.0	400.0
843.0	743.0	741.5	256.0	133.6	84.0	28.0	78.0	46.0	26.5	9.0	360.0
825.0	725.0	723.5	240.0	119.5	72.5	23.5	67.3	39.8	22.0	8.7	315.0
513.0	413.0	411.5	240.0	119.5	72.5	23.5	67.3	39.8	22.0	8.7	180.0
200.0	200.0	185.0	64.0*	45.4	31.0	9.0	28.5	15.9	8.0	3.4	25.6
288.0	288.0	273.0	64.0	45.4	34.0	9.0	31.3	17.8	8.0	3.2	35.0
389.0	389.0	345.5	84.0	59.0	40.0	15.5	38.5	19.0	14.5	10.0	70.5
489.7	448.0	435.5	97.0	70.0	45.3	12.3	42.3	26.0	11.3	4.2	100.0
400.0	400.0	375.5	96.0	66.3	53.3	20.3	46.8	22.0	19.3	13.4	90.4
614.0	544.0	539.5	116.0	87.5	52.8	15.8	50.4	30.1	14.8	5.8	150.0
622.0	552.0	543.5	124.0	93.0 88.9-10 only	55.3- 57.3	16.8	50.4- 52.8	29.6- 31.0	16.0- 16.2	5.8- 6.2	163.0- 183.5
482.6	413.5	389.0	71.0	49.0 49.3-5 only	38.0	6.3	32.6	21.2	8.6	5.3	70.5
488.6	413.5	389.0	81.0	59.0	38.0	7.1	32.8	20.6	8.7	5.7	81.3
512.6	438.0	353.0	81.0	59.3	48.8	7.1	41.3	30.0	10.8	7.2	86.5
492.0	432.0	357.5	96.0	64.0	61.0	16.5	54.5	38.0	14.8	6.0	99.0
657.3	587.3	579.3	132.5	97.5	53.7	20.0	49.7	25.7	18.5	8.3	185.0
542.0	472.0	464.2	114.0	85.5	49.8	16.8	45.8	25.0	15.8	7.8	-
412.0	352.0	345.2	90.0	64.8	41.0	13.7	37.0	19.3	12.7	6.8	75.5
598.0	528.0	519.5	118.0	87.0	52.2	16.2	45.8	25.6	14.7	5.7	140.0
200.0	200.0	185.0	64.0	45.0	31.0	9.0	28.5	15.9	8.0	3.4	25.6

[1] Floating drydock characteristics were obtained from the following sources: Chapter 3, floating drydocks, clearances, and general data, NAVDOCKS DM-29(5), Change 3, May 1965 issue (this chapter has been deleted from the present issue of NAVFAC DM-29); the previous edition of NAVFAC DM-26, Chapter 7, Table 7-7; and from inquiries made by the Waterfront Section of the Naval Facilities Engineering Command regarding ARDM-4.

Table 3. Characteristics of Floating Drydocks [1] (Continued)

		DISPLACEMENT IN LONG TONS			BROADSIDE WIND AREAS[5] IN SQUARE FEET			FRONTAL WIND AREAS[5] IN SQUARE FEET		
DOCK DESIGNATION	DOCKS IN CLASS	MAXIMUM SUBMERGENCE	WORKING[4] FREEBOARD, MAX.VESSEL ON BLOCKS	LIGHT	MAXIMUM SUBMERGENCE	WORKING FREEBOARD, MAX.VESSEL ON BLOCKS	LIGHT	MAXIMUM SUBMERGENCE	WORKING FREEBOARD, MAX.VESSEL ON BLOCKS	LIGHT
AFDB	1	92,600	65,200	19,000	4,700	34,300	32,800	2,200	11,250	9,500
AFDB	2	185,000	130,000	38,000	8,400	100,200	65,900	2,200	18,220	9,500
AFDB	3	166,700	117,400	34,100	7,800	95,950	59,600	2,200	18,220	9,500
AFDB	4,5	128,800	87,500	30,100	7,300	95,170	49,800	1,900	17,820	7,200
AFDB	7	73,600	50,000	17,200	4,200	23,250	28,500	1,900	5,030	7,200
AFDL	1,2,6,8-12,15, 16,19,21,23,25, 29	3,800	2,150	800	800	6,610	4,600	150	2,520	800
AFDL	7,22,23	6,300	3,400	1,160	1,200	9,500	7,800	300	2,080	1,000
AFDL	37,38,40,41,44, 45	16,700	10,900	8,300	2,000	17,450	10,700	900	3,200	1,900
AFDL	47	23,100	13,800	5,000	4,000	34,300	18,600	900	4,800	2,500
AFDL	48	27,600	20,000	14,000	3,100	22,700	14,200	830	4,320	1,560
AFDM	1,2	-	-	6,800	4,000	46,050	28,000	1,300	9,300	3,200
AFDM	3,5-10	43,300	27,200	7,800	5,000	62,000	30,000	1,400	10,800	3,600
ARD	5,7,8	-	6,990	4,200	4,300	20,600	17,500	1,750	4,070	3,700
ARD-ARDM	ARD-12,30,32; ARDM-1,2	-	6,120	5,200	5,400	20,800	18,600	2,000	4,600	4,400
ARDM	3	43,500	10,800	7,540	5,140	26,760	23,050	2,570	5,340	5,340
ARDM	4	30,000	11,660	5,200	2,800	40,900	24,200	210	6,660	2,500
YFD	6	53,400	35,400	13,100	3,300	49,600	28,000	100	10,150	2,600
YFD	23	31,300	20,700	8,700	1,900	31,900	19,800	70	7,130	1,800
YFD	54	15,200	9,600	4,300	2,000	24,400	13,000	200	5,000	1,300
YFD	68-71	36,300	22,200	6,500	2,900	46,800	25,600	250	9,100	2,450
YFD	83	3,800	2,150	800	800	6,610	4,600	150	2,520	800

[1] Floating drydock characteristics were obtained from the following sources: Chapter 3, floating drydocks, clearances, and general data, NAVDOCKS DM-29(5), Change 3, May 1965 issue (this chapter has been deleted from the present issue of NAVFAC DM-29); the previous edition of NAVFAC DM-26, Chapter 7, Table 7-7; and from inquiries made by the Waterfront Section of the Naval Facilities Engineering Command regarding ARDM-4.

[4] In almost all cases, the displacement of each drydock with maximum vessel on blocks was derived from the design stability curves for each class of dock.

[5] Broadside and frontal wind presentment areas were calculated from elevations and cross sections indicated on outline drawings contained in Chapter 3 of NAVDOCKS DM-29(5) upon which the longitudinal profiles and cross sections of the vessel being drydocked were superimposed. Vessel data was obtained from the sources listed in footnote (8) of Table 2. The composite broadside and frontal wind presentment areas were then measured by planimeter for the fully loaded stage and then were calculated for the other two stages utilizing the respective change in draft of the drydock.

3. Tankers and Barge Tanker Service Craft Characteristics. Table 4 presents the principal dimensions and locations of manifolds of tankers and service craft used to transport liquid cargoes in bulk form. Depending on the vessel, the manifold connections can be made only on the port side, only on the starboard side, or on both sides. Some vessels have multiple manifold locations along the length of the deck. Some of these multiple manifold connections can be made on both sides and some on only the port or starboard sides. A connection that is limited to only one side of the vessel is indicated in the table by asterisks.

Table 4. Mainfold Locations – Tanker Vessels and Barge Tanker Service Craft

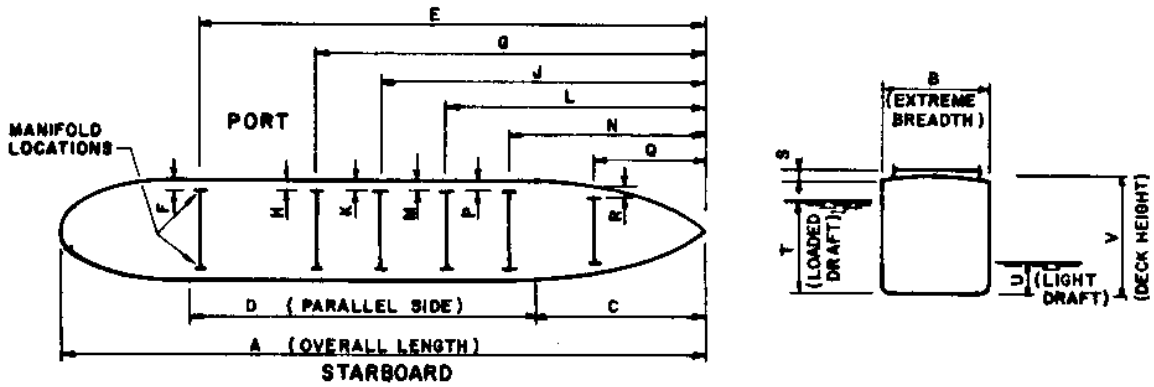

NOTES: DECK HEIGHTS GIVEN ARE AVERAGE SHIP CENTERLINE HEIGHTS AT THE MANIFOLDS OR FUEL STATIONS.
LIGHT AND LOADED DRAFTS GIVEN ARE AVERAGE MIDSHIP DRAFTS.

VESSEL CLASSIFICATION		DIMENSIONS IN FEET									
		A	B	C	D	E	F	G	H	J	K
AO	57,62	553	75	198	195	411		290		none	none
AO	51,98,99	644	75	200	250	500		437		382	
AO	105-109	644-664	75	205	230	502		none	none	294	
AO	143-148	655	86	215	256	453	9	373	9	283	9
AO	177-180,186	592	88	230	220	390	8	326*	8	298**	8
						408*	8	372**	8	308*	6
AOE	1-4	795-796	107	437	150	578*	4	457*	4	397**	22
AOG	58	311	49								
AOG	77-79	325	48	97	133	290	3	190	18	151	19
AOG	81-82	302	61	none	none	none	none	167	25	none	none
AOR	1-7	659	96	261	226	457	9	396	24	311	9
AOT	50,67,73,75,76,78,134	524	68	139	217	none	none	none	none	250	
AOT	149,151,152	620	84	188	247	none	none	none	none	285	10
AOT	165	615	80	240	215	none	none	none	none	295	9
AOT	168-176	587	84	145	309	422	12	306	12	none	none
AOT	181	620	84	180	257	none	none	none	none	285	
AOT	182-185	672	89	176	370	none	none	363		none	none
YO	47	235	37	56	118	none	none	130	7	none	none
YO	106,129,171,174,194,200,202,203,220, 223,225,228,230,241,257,264	174	33	51	50	none	none	none	none	72	8
YO	153	156	30								
YOG	58,67,68,78,79,87,88,93,196	174	33	51	50	none	none	none	none	72	8
YOGN	8-10,26	165	35								
YOGN	110,111,113-115,122-125	165	42								
YON	1,2	87	28								
YON	80,81,84-88	174	40								
YON	90,91,96-98,100,102,235	165	35								
YON	239	100	40								
YON	255,256	120	33								
YON	258,260-262,265,268,269,271-275,280,295	165	40								
YON	305,306										
YOS	8,10-12,15-17,20	80	34								
YOS	21,23,24,28,33	110	34								
YOS	34										

* Port side only
** Starboard side only

Table 4. Manifold Locations — Tanker Vessels and Barge Tanker Service Craft (Continued)

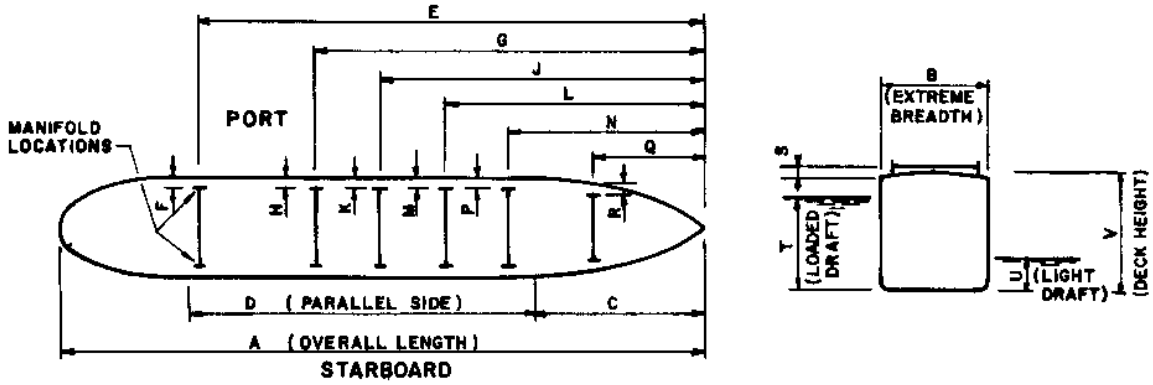

NOTES: DECK HEIGHTS GIVEN ARE AVERAGE SHIP CENTERLINE HEIGHTS AT THE MANIFOLDS OR FUEL STATIONS.
LIGHT AND LOADED DRAFTS GIVEN ARE AVERAGE MIDSHIP DRAFTS.

VESSEL CLASSIFICATION		DIMENSIONS IN FEET									
		L	M	N	P	Q	R	S	T	U	V
AO	57,62	232		none	none	122			32.0	11.8	
AO	51,98,99	296		200**		158*			38.0	16.4	55.0
AO	105-109	190*							35.8	10.4	54.0
AO	143-148	142	8	none	none	none	none		33.6	12.5	55.0
AO	177-180,186	264	14	190	8	172**	8		33.3		
						208*	6				
AOE	1-4	336*	4	276**	4	219*	4		41.0	20.9	66.0
AOG	58								16.0	7.9	
AOG	77-79	84	19	59	16	none	none		19.0	7.6	24.5
AOG	81-82	none	none	79	21	none	none		19.0	5.1	
AOR	1-7	273	9	215	22	157	7		36.0	17.6	
AOT	50,67,73,75,76,78,134	none	none	none	none	none	none		30.0	9.3	
AOT	149,151,152	none	none	none	none	none	none	4	33.6	8.7	43.5
AOT	165	none	none	none	none	none	none		36.0	11.0	46.5
AOT	168-176	none	none	none	none	none	none	4	34.5	7.1	47.0
AOT	181	none	none	none	none	none	none		33.7	8.3	42.0
AOT	182-185	none	none	none	none	none	none		36.2	7.7	49.0
YO	47	none	none	67	7	none	none		15.0	6.6	19.5
YO	106,129,171,174,194,200,202,203,220, 223,225,228,230,241,257,264	70	8	none	none	none	none	3	13.0	5.1	19.0
YO	153								12.0	5.9	
YOG	58,67,68,78,79,87,88,93,196	70	8	none	none	none	none	3	13.0	5.1	
YOGN	8-10,26								8.0		
YOGN	110,111,113-115,122-125								8.0	2.2	
YON	1,2								7.0		
YON	80,81,84-88								8.0	1.0	
YON	90,91,96-98,100,102,235								8.0		
YON	239								7.0		
YON	255,256										
YON	258,260-262,265,268,269,271-275,280,295								8.0		
YON	305,306										
YOS	8,10-12,15-17,20								5.0		
YOS	21,23,24,28,33								9.0		
YOS	34										

* Port side only
** Starboard side only

Service Craft (Continued)]

SECTION 4. COMMERCIAL MOORING SYSTEM COMPONENTS

1. Availability of Components. This section presents strength and dimensional data for an assortment of commercially available mooring ropes, chains, chain fittings, anchors, buoys, and sinkers. At the bottom of some tables, there is a footnote listing the name of the components suppliers who furnished the data for publication. The names and locations of these suppliers are contained in the acknowledgements at the front of this volume. Often, there are many suppliers of the same component because it is fabricated to a standard established by such organizations as the U.S. Navy or the American Bureau of Shipping. For additional information on materials used, construction, features, limitations, applications, and other technical data, refer to the manufacturer. The availability of any particular component and the accuracy of the data should be verified prior to selection.

2. Mooring Rope. Rope used to moor vessels is of several types -- synthetic fiber, natural fiber, and wire. At times, these materials are spliced together or are used in combination throughout the length of the rope. For example, a nylon tail may be attached to the end of a Wire rope to facilitate wrapping around a mooring fitting. An example of combinations of materials is wire rope which can be manufactured with either a fiber core or a steel core. For further details of mooring rope construction, refer to manufacturers' catalogs.

The dimensions, weight, and breaking strength of ropes used in moorings are presented in Tables 5 through 9. Additionally, comparisons of various properties of fiber ropes are presented.

Note: Section 4 is included for information purposes and does not imply an endorsement of any particular supplier's component, nor does it preclude the use of other suitable materials.

Table 5. Weight and Breaking Strength of Natural and Synthetic Fiber Ropes

SIZE (INCHES)		MANILA[1] 3 & 4 STRAND TWISTED, 8 STRAND PLAITED		SISAL 3 STRAND TWISTED		NYLON[2] 3 STRAND TWISTED, 8 STRAND PLAITED		NYLON[3] TWO-IN-ONE DOUBLE BRAIDED	
DIA.	CIRC.	WT. LB/ 100 FT.	MIN.BREAK STGTH LB.	WT. LB/ 100 FT.	MIN.BREAK STGTH LB.	WT. LB/ 100 FT.	MIN.BREAK STGTH LB.	WT. LB/ 100 FT.	MIN.BREAK STGTH LB.
3/16	5/8	1-1/2	405	1-1/2	360	1	900	-	-
1/4	3/4	2	540	2	480	1-1/2	1,490	1-1/2	2,070
5/16	1	3	900	3	800	2-1/2	2,300	2-1/2	3,060
3/8	1-1/8	4	1,215	4	1,080	3-1/2	3,350	3-1/2	4,410
7/16	1-1/4	5	1,575	5	1,400	5	4,500	5	5,940
1/2	1-1/2	7-1/2	2,385	7-1/2	2,120	6-1/2	5,750	6-1/2	7,650
9/16	1-3/4	10	3,105	10	2,760	8-1/2	7,200	9	10,530
5/8	2	13	3,960	13	3,520	10-1/2	9,350	12	13,680
3/4	2-1/4	17	4,860	17	4,320	14-1/2	12,800	15	17,190
13/16	2-1/2	20	5,850	20	5,200	17	15,300	18	21,150
7/8	2-3/4	23	6,930	23	6,160	20	18,000	22	25,470
1	3	27	8,100	27	7,200	26	22,500	26	30,240
1-1/16	3-1/4	31	9,450	31	8,400	29	25,900	31	35,400
1-1/8	3-1/2	36	10,800	36	9,600	34	29,700	36	40,500
1-1/4	3-3/4	42	12,150	42	10,800	40	33,750	41	46,800
1-5/16	4	48	13,500	48	12,000	45	38,750	47	53,100
1-1/2	4-1/2	60	16,650	60	14,800	55	47,700	60	66,600
1-5/8	5	74	20,250	74	18,000	68	58,500	74	81,900
1-3/4	5-1/2	90	23,850	90	21,200	83	70,200	89	99,000
2	6	108	27,900	108	24,800	95	82,800	106	117,900
2-1/8	6-1/2	125	32,400	-	-	109	95,400	124	137,700
2-1/4	7	146	36,900	146	32,800	129	113,000	144	159,300
2-1/2	7-1/2	167	41,850	-	-	149	126,000	165	181,800
2-5/8	8	191	46,800	191	41,600	168	146,000	188	207,000
2-7/8	8-1/2	215	52,200	-	-	189	162,000	212	231,300
3	9	242	57,600	242	51,200	210	180,000	238	256,500
3-1/4	10	299	69,300	299	61,600	263	225,000	294	289,800
3-1/2	11	367	81,900	-	-	316	270,000	356	345,600
4	12	436	94,500	436	84,000	379	324,000	423	405,900
4-1/4	13	-	-	-	-	445	376,000	497	470,700
4-5/8	14	-	-	-	-	520	437,000	576	539,100
5	15	-	-	-	-	590	501,000	662	612,000
5-1/4	16	-	-	-	-	-	-	753	689,400
5-1/2	17	-	-	-	-	-	-	850	770,400
6	18	-	-	-	-	-	-	953	855,000
6-1/4	19	-	-	-	-	-	-	1,061	945,000
6-1/2	20	-	-	-	-	-	-	1,176	1,037,000
7	21	-	-	-	-	-	-	1,297	1,134,000
8	24	-	-	-	-	-	-	1,693	1,282,000
8-1/2	26	-	-	-	-	-	-	1,987	1,482,000
9-1/4	28	-	-	-	-	-	-	2,305	1,696,000
10	30	-	-	-	-	-	-	2,646	1,920,000

[1]Data provided by Wall Rope Works and Columbian Rope Company.

[2]Data provided by Columbian and Tubbs/Jackson Rope Companies.

[3]Data provided by Samson Ocean System Company. Breaking strength values are reduced 10%.

NOTE: Breaking strength values are based on laboratory tests of new and unused ropes. All ropes will deteriorate somewhat as they age.

Table 5. Weight and Breaking Strength of Natural and Synthetic Fiber Ropes (Continued)

SIZE (INCHES)		KEVLAR[3] 12 STRAND SINGLE BRAID		POLYESTER[4] 3 STRAND TWISTED 8 STRAND PLAITED		POLYESTER[3] TWO-IN-ONE WITH DURON DOUBLE BRAIDED		POLYPROPYLENE MONOFILAMENT[4] 3 STRAND TWISTED 8 STRAND PLAITED	
DIA	CIRC.	WT. LB/ 100 FT.	MIN.BREAK STGTH LB.	WT. LB/ 100 FT.	MIN.BREAK STGTH LB.	WT. LB/ 100 FT.	MIN.BREAK STGTH LB.	WT. LB/ 100 FT.	MIN.BREAK STGTH LB.
3/16	5/8	1	3,150	1	900	-	-	3/4	720
1/4	3/4	2	5,850	2	1,490	2	2,070	1	1,130
5/16	1	3	8,400	3	2,300	3	3,060	2	1,710
3/8	1-1/8	4	10,800	4-1/2	3,350	4-1/2	4,410	3	2,430
7/16	1-1/4	5	13,100	6	4,500	6	5,940	4	3,150
1/2	1-1/2	8	20,000	8	5,750	8	7,650	5	3,780
9/16	1-3/4	10	24,300	10	7,200	10-1/2	10,300	6	4,590
5/8	2	14	32,400	13	9,000	14	13,100	7-1/2	5,580
3/4	2-1/4	16	37,800	17-1/2	11,300	18	16,600	10-1/2	7,650
13/16	2-1/2	20	45,000	21	14,000	22	20,300	12-1/2	8,910
7/8	2-3/4	24	54,000	25	16,200	27	24,300	15	10,400
1	3	30	63,000	30	19,800	32	28,300	18	12,600
1-1/16	3-1/4	34	72,000	34	23,000	37	32,800	20-1/2	14,400
1-1/8	3-1/2	40	83,000	40	26,600	43	38,500	23-1/2	16,500
1-1/4	3-3/4	56	94,000	46	29,900	49	43,200	27	18,900
1-5/16	4	52	104,000	52	33,800	56	49,000	30-1/2	21,200
1-1/2	4-1/2	66	129,000	67	42,100	71	61,200	38-1/2	26,700
1-5/8	5	82	156,000	82	51,300	88	75,400	47-1/2	32,400
1-3/4	5-1/2	99	184,000	98	61,000	100	90,200	57	38,700
2	6	118	214,000	118	72,000	126	106,000	69	46,800
2-1/8	6-1/2	138	247,000	135	82,600	148	123,300	80	54,900
2-1/4	7	160	282,000	157	96,300	172	141,300	92	62,100
2-1/2	7-1/2	-	-	181	110,000	197	162,000	107	72,000
2-5/8	8	-	-	205	123,000	224	180,000	120	81,000
2-7/8	8-1/2	-	-	230	139,000	253	200,700	137	90,900
3	9	-	-	258	157,000	284	225,000	153	103,000
3-1/4	10	-	-	318	189,000	350	252,000	190	123,000
3-1/2	11	-	-	384	229,000	424	302,400	232	146,000
4	12	-	-	460	270,000	504	356,400	275	171,000
4-1/4	13	-	-	540	314,000	592	414,900	325	205,200
4-5/8	14	-	-	630	365,000	686	477,900	375	238,200
5	15	-	-	720	419,000	788	545,400	430	273,600
5-1/4	16	-	-	-	-	896	616,500	-	-
5-1/2	17	-	-	-	-	1012	691,200	-	-
6	18	-	-	-	-	1134	771,000	-	-
6-1/4	19	-	-	-	-	1264	854,000	-	-
6-1/2	20	-	-	-	-	1400	945,000	-	-
7	21	-	-	-	-	1544	1,035,000	-	-
8	24	-	-	-	-	2016	1,125,000	-	-
8-1/2	26	-	-	-	-	2366	1,296,000	-	-
9-1/4	28	-	-	-	-	2744	1,476,000	-	-
10	30	-	-	-	-	3150	1,665,000	-	-

[3]Data provided by Samson Ocean System Company. Breaking strength values are reduced 10%.

[4]Data provided by Wall Rope Works, Columbian Rope Company, and Tubbs/Jackson Rope Company.

NOTE: Breaking strength values are based on laboratory tests of new and unused ropes. All ropes will deteriorate somewhat as they age.

Table 5. Weight and Breaking Strength of Natural and Synthetic Fiber Ropes (Continued)

SIZE (INCHES)		POLYPROPYLENE MULTIFILAMENT[4] 3 STRAND TWISTED 8 STRAND PLAITED		POLYPROPYLENE MULTIFILAMENT[3] TWO-IN-ONE DOUBLE BRAIDED		POLYPROPYLENE MONOFILAMENT[5] 12 STRAND SINGLE BRAIDED		POLYETHYLENE[5] 3 STRAND TWISTED 8 STRAND PLAITED	
DIA.	CIRC.	WT. LB/ 100 FT.	MIN.BREAK STGTH LB.	WT. LB/ 100 FT.	MIN.BREAK STGTH LB.	WT. LB/ 100 FT.	MIN.BREAK STGTH LB.	WT. LB/ 100 FT.	MIN.BREAK STGTH LB.
3/16	5/8	3/4	660	-	-	-	-	3/4	660
1/4	3/4	1	1,030	-	-	-	-	1	1,030
5/16	1	2	1,560	-	-	-	-	2	1,560
3/8	1-1/8	3	2,210	-	-	-	-	3	2,210
7/16	1-1/4	4-1/2	2,870	-	-	-	-	4	2,870
1/2	1-1/2	5-1/2	3,440	-	-	-	-	5	3,440
9/16	1-3/4	6-1/2	4,180	-	-	-	-	6	4,180
5/8	2	8	5,080	-	-	-	-	8	5,080
3/4	2-1/4	11	6,960	-	-	-	-	11	6,960
13/16	2-1/2	13-1/2	8,110	-	-	-	-	13	8,110
7/8	2-3/4	16	9,460	-	-	-	-	15-1/2	9,460
1	3	19-1/2	11,470	-	-	-	-	18-1/2	11,470
1-1/16	3-1/4	22	13,100	-	-	-	-	21-1/2	13,100
1-1/8	3-1/2	25	15,020	28-1/2	24,750	-	-	24-1/2	15,020
1-1/4	3-3/4	29	17,200	33	28,170	-	-	28	17,200
1-5/16	4	32-1/2	19,290	37-1/2	31,680	-	-	31-1/2	19,290
1-1/2	4-1/2	41	24,300	48	39,420	-	-	40	24,300
1-5/8	5	51	29,480	58-1/2	47,880	47-1/2	40,230	49-1/2	29,480
1-3/4	5-1/2	61	35,220	71	57,150	57	47,880	59	35,220
2	6	74	42,590	84	67,140	68	56,160	72	42,590
2-1/8	6-1/2	86	49,960	99	77,850	80	64,980	83	49,960
2-1/4	7	98	56,510	115	89,280	93	74,430	96	56,510
2-1/2	7-1/2	114	65,520	132	101,700	107	84,400	111	65,520
2-5/8	8	128	73,710	150	114,300	122	94,500	125	73,710
2-7/8	8-1/2	147	82,720	169	126,900	137	105,300	142	82,720
3	9	164	93,730	190	140,400	154	117,000	159	93,730
3-1/4	10	203	111,930	234	169,200	190	143,100	198	111,930
3-1/2	11	248	132,860	283	200,700	230	169,200	241	132,860
4	12	294	155,610	337	234,000	274	198,000	286	155,610
4-1/4	13	348	186,730	395	270,000	-	-	-	-
4-5/8	14	401	216,760	459	307,800	-	-	-	-
5	15	460	248,980	526	347,400	-	-	-	-
5-1/4	16	-	-	599	389,700	-	-	-	-
5-1/2	17	-	-	676	433,800	-	-	-	-
6	18	-	-	758	480,000	-	-	-	-
6-1/4	19	-	-	845	528,000	-	-	-	-
6-1/2	20	-	-	936	579,000	-	-	-	-
7	21	-	-	1,032	630,000	-	-	-	-
8	24	-	-	-	-	-	-	-	-
8-1/2	26	-	-	-	-	-	-	-	-
9-1/4	28	-	-	-	-	-	-	-	-
10	30	-	-	-	-	-	-	-	-

[3]Data provided by Samson Ocean System Company. Breaking strength values are reduced 10%.

[4]Data provided by Wall Rope Works, Columbian Rope Company, and Tubbs/Jackson Rope Company.

[5]Data provided by Wall Rope Works.

NOTE: Breaking strength values are based on laboratory tests of new and unused ropes. All ropes will deteriorate somewhat as they age.

Ropes (Continued)]

Table 6. Weight and Breaking Strength of Composite Synthetic Fiber Ropes

SIZE (INCHES)		P/D 10[1] POLYESTER COVER POLYPROPYLENE CORE 3 & 8 STRAND		P/D 100[1] POLYESTER AND POLYETHYLENE COVER POLYETHYLENE CORE 3 & 8 STRAND		POLY-PLUS[2] BLEND OF POLYPROPYLENE, POLYESTER, & POLYETHYLENE CORE AND SINGLE COVER		POLY-CROW[2] BLEND OF POLYESTER & POLYETHYLENE CORE AND DOUBLE COVER		LST-MOORING[2] POLYESTER COVER POLYPROPYLENE CORE 3-STRAND	
DIAM.	CIRC.	WT. LB/ 100 FT.	MIN.BREAK STGTH LB.	WT. LB/ 100 FT.	MIN.BREAK STGTH LB.	WT. LB/ 100 FT.	MIN.BREAK STGTH LB.	WT. LB/ 100 FT.	MIN.BREAK STGTH LB.	WT. LB/ 100 FT.	MIN.BREAK STGTH LB.
3/16	5/8	1	720	-	-	-	-	-	-	-	-
1/4	3/4	1-1/2	1,130	-	-	-	-	-	-	-	-
5/16	1	2-1/2	1,710	-	-	-	-	-	-	-	-
3/8	1-1/8	3-1/2	2,430	4	2,390	3-1/2	2,380	-	-	-	-
7/16	1-1/4	5	3,150	5-1/2	3,020	5	3,240	-	-	-	-
1/2	1-1/2	6-1/2	3,960	6-1/2	3,780	6-1/2	4,050	-	-	-	-
9/16	1-3/4	8	4,860	9-1/2	5,490	8	4,900	-	-	-	-
5/8	2	9-1/2	5,760	10-1/2	6,030	9-1/2	5,760	-	-	-	-
3/4	2-1/4	12-1/2	7,560	15	8,010	12	7,560	-	-	-	-
13/16	2-1/2	15	9,180	-	-	14-1/2	9,180	-	-	-	-
7/8	2-3/4	18	10,800	20-1/2	10,400	17	10,800	-	-	-	-
1	3	22	13,100	26-1/2	12,600	21-1/2	13,500	26-1/2	12,600	-	-
1-1/16	3-1/4	25-1/2	15,200	-	-	24	15,390	-	-	-	-
1-1/8	3-1/2	29	17,400	34	18,900	27	17,370	34	18,900	-	-
1-1/4	3-3/4	33	19,800	39	21,600	32-1/2	19,800	39	21,600	-	-
1-5/16	4	35-1/2	21,200	44	24,300	38	22,500	44	24,300	-	-
1-1/2	4-1/2	45	26,700	55	30,600	46	28,170	55	30,600	-	-
1-5/8	5	54-1/2	32,400	67	37,800	55	34,470	67	37,800	-	-
1-3/4	5-1/2	63	38,700	80	45,000	65	41,850	80	45,000	65	54,900
2	6	78	46,800	95	54,000	83	50,850	95	54,000	80	65,700
2-1/8	6-1/2	92	54,900	112	59,400	97	58,950	112	63,000	94	72,000
2-1/4	7	105	62,100	127	64,800	108	66,600	127	72,000	110	90,000
2-1/2	7-1/2	122	72,000	147	74,700	122	77,400	147	82,800	125	99,000
2-5/8	8	138	81,000	165	85,100	138	86,400	165	94,500	140	108,000
2-7/8	8-1/2	155	91,000	-	-	155	94,500	-	-	155	121,500
3	9	174	103,000	208	105,000	179	109,800	208	117,000	175	137,700
3-1/4	10	210	123,000	253	132,000	210	129,600	253	146,700	210	166,500
3-1/2	11	255	146,000	-	-	248	153,000	-	-	245	202,500
4	12	300	171,000	-	-	290	180,000	-	-	295	238,500
4-1/4	13	-	-	-	-	-	-	-	-	-	-
4-5/8	14	-	-	-	-	-	-	-	-	-	-
5	15	-	-	-	-	-	-	-	-	-	-
5-1/4	16	-	-	-	-	-	-	-	-	-	-
5-1/2	17	-	-	-	-	-	-	-	-	-	-
6	18	-	-	-	-	-	-	-	-	-	-
6-1/4	19	-	-	-	-	-	-	-	-	-	-
6-1/2	20	-	-	-	-	-	-	-	-	-	-
7	21	-	-	-	-	-	-	-	-	-	-

[1]Data provided by Columbian Rope Company.

[2]Data provided by Wall Rope Works.

NOTE: Breaking strength values are based on laboratory tests of new and unused ropes. All ropes will deteriorate somewhat as they age.

Table 6. Weight and Breaking Strength of Composite Synthetic Fiber Ropes (Continued)

SIZE (INCHES)		LST-WORKBOAT[2] POLYESTER & POLYETHYLENE COVER POLYPROPYLENE CORE 3 STRAND		UNILINE[2] PARALLEL FIBER CORE WITH NEOPRENE JACKET AND BRAIDED COVER: NYLON CORE & COVER		NYLON CORE AND POLYESTER COVER		KEVLAR CORE AND NYLON COVER		PRODOK[3] POLYOLEFIN CORE POLYESTER JACKET EACH STRAND 3 STRAND		DURA-PLEX[4] POLYOLEFIN CORE POLYESTER JACKET EACH STRAND 12 STRAND	
DIAM.	CIRC.	WT.LB/ 100FT.	MIN.BREAK STGTH LB.	WT.LB/ 100FT.	MIN.BREAK STGTH LB.	WT.LB/ 100FT.	MIN.BREAK STGTH LB.	WT.LB/ 100FT.	MIN.BREAK STGTH LB.	WT.LB/ 100FT.	MIN.BREAK STGTH LB.	WT.LB/ 100FT.	MIN.BREAK STGTH LB.
3/16	5/8	-	-	-	-	-	-	-	-	-	-	-	-
1/4	3/4	-	-	-	-	-	-	-	-	-	-	1-3/4	1,790
5/16	1	-	-	-	-	-	-	-	-	-	-	2-1/2	2,340
3/8	1-1/8	-	-	-	-	-	-	-	-	-	-	3-1/2	3,490
7/16	1-1/4	-	-	-	-	-	-	-	-	-	-	5	4,680
1/2	1-1/2	-	-	9	10,000	10	10,000	10	20,000	-	-	6	6,030
9/16	1-3/4	-	-	-	-	-	-	-	-	-	-	8	8,100
5/8	2	-	-	13	16,000	15	16,000	15	32,000	-	-	10-1/2	10,440
3/4	2-1/4	-	-	19	23,000	21-1/2	23,000	22	46,000	-	-	13-1/2	13,050
13/16	2-1/2	-	-	-	-	-	-	-	-	-	-	-	-
7/8	2-3/4	-	-	26	31,400	29-1/2	31,400	30	62,800	-	-	20	19,080
1	3	-	-	34	40,900	38-1/2	40,900	39	81,800	-	-	24	22,500
1-1/16	3-1/4	-	-	-	-	-	-	-	-	-	-	28	26,190
1-1/8	3-1/2	-	-	42-1/2	51,800	49	51,800	49	103,600	-	-	32-1/2	30,150
1-1/4	3-3/4	-	-	53	64,000	60-1/2	64,000	61	128,000	-	-	37-1/2	34,380
1-5/16	4	-	-	64	77,400	73	77,400	73-1/2	154,800	-	-	42-1/2	38,880
1-1/2	4-1/2	-	-	76	92,200	87	92,200	87-1/2	184,400	-	-	54	48,600
1-5/8	5	-	-	89	108,000	102	108,000	103	216,000	-	-	67	59,400
1-3/4	5-1/2	66	48,600	103	125,000	118	125,000	119	250,000	-	-	81	71,200
2	6	84	58,500	135	164,000	155	164,000	156	328,000	82	49,950	96	84,000
2-1/8	6-1/2	98	67,500	-	-	-	-	-	-	93	58,500	112	98,100
2-1/4	7	113	75,600	-	-	-	-	-	-	106	66,150	130	112,500
2-1/2	7-1/2	128	85,500	-	-	-	-	-	-	122	76,050	150	128,700
2-5/8	8	143	95,400	-	-	-	-	-	-	138	85,050	170	144,000
2-7/8	8-1/2	160	108,000	-	-	-	-	-	-	-	-	192	162,000
3	9	185	117,000	-	-	-	-	-	-	178	108,000	215	180,000
3-1/4	10	220	144,000	-	-	-	-	-	-	211	129,150	265	219,600
3-1/2	11	255	175,500	-	-	-	-	-	-	258	153,000	321	261,000
4	12	310	207,000	-	-	-	-	-	-	299	180,000	382	303,000
4-1/4	13	-	-	-	-	-	-	-	-	-	-	-	-
4-5/8	14	-	-	-	-	-	-	-	-	-	-	-	-
5	15	-	-	-	-	-	-	-	-	-	-	-	-
5-1/4	16	-	-	-	-	-	-	-	-	-	-	-	-
5-1/2	17	-	-	-	-	-	-	-	-	-	-	-	-
6	18	-	-	-	-	-	-	-	-	-	-	-	-
6-1/4	19	-	-	-	-	-	-	-	-	-	-	-	-
6-1/2	20	-	-	-	-	-	-	-	-	-	-	-	-
7	21	-	-	-	-	-	-	-	-	-	-	-	-

[2]Data provided by Wall Rope Works.

[3]Data provided by Tubbs/Jackson Rope Company.

[4]Data provided by Samson Ocean System Company. Breaking strength values are reduced 10%.

NOTE: Breaking strength values are based on laboratory tests of new and unused ropes. All ropes will deteriorate somewhat as they age.

Ropes (Continued)]

Table 6. Weight and Breaking Strength of Composite Synthetic Fiber Ropes (Continued)

SIZE (INCHES)		BLUE STREAK[4] POLYPROPYLENE CORE POLYESTER JACKET EACH STRAND 12 STRAND		KEVLAR[4] CORE POLYESTER COVER DOUBLE BRAIDED		POWER BRAID[4] POLYPROPYLENE CORE NYLON COVER DOUBLE BRAIDED		NYDAC[4] POLYESTER CORE NYLON COVER DOUBLE BRAIDED		NYSTRON SPM BRAID[4] NYLON AND POLYESTER DOUBLE BRAIDED	
DIAM.	CIRC.	WT. LB/ 100 FT.	MIN.BREAK STGTH LB.	WT. LB/ 100 FT.	MIN.BREAK STGTH LB.	WT. LB/ 100 FT.	MIN.BREAK STGTH LB.	WT. LB/ 100 FT.	MIN.BREAK STGTH LB.	WT. LB/ 100 FT.	MIN.BREAK STGTH LB.
3/16	5/8	-	-	-	-	-	-	-	-	-	-
1/4	3/4	1-3/4	1,620	-	-	-	-	2	1,750	-	-
5/16	1	2-1/2	2,160	-	-	-	-	3	2,340	-	-
3/8	1-1/8	3-1/2	3,240	-	-	3-1/2	3,980	4	3,490	-	-
7/16	1-1/4	5	4,320	-	-	4-1/2	5,310	5-1/2	4,680	-	-
1/2	1-1/2	6-1/2	5,580	8	14,400	6	6,840	7	6,030	-	-
9/16	1-3/4	8-1/2	7,470	11	16,900	8	9,180	10	8,100	-	-
5/8	2	11	9,900	15	23,400	10-1/2	11,700	13-1/2	10,440	-	-
3/4	2-1/4	14	11,700	19	28,800	13	14,760	17	13,050	-	-
13/16	2-1/2	-	-	23	34,200	16	18,000	21	15,930	-	-
7/8	2-3/4	21	18,000	28	40,500	19-1/2	21,600	25	19,080	-	-
1	3	25	20,700	33	46,800	23-1/2	25,560	30	22,680	-	-
1-1/16	3-1/4	-	-	39	54,000	27-1/2	29,700	35	26,190	-	-
1-1/8	3-1/2	34-1/2	27,900	45	61,200	32	34,200	41	30,150	-	-
1-1/4	3-3/4	39-1/2	31,500	52	69,300	37	39,060	47	34,380	-	-
1-5/16	4	45	36,000	59	77,400	42	44,100	53-1/2	38,880	-	-
1-1/2	4-1/2	57	45,000	75	94,500	53	55,170	67-1/2	48,600	-	-
1-5/8	5	70	54,900	92	113,400	65	67,500	83	59,400	80	90,000
1-3/4	5-1/2	85	66,600	112	133,200	79	81,000	101	71,190	97	108,900
2	6	101	78,300	132	154,800	94	95,400	120	84,000	115	129,600
2-1/8	6-1/2	118	90,000	156	177,300	110	110,700	141	98,100	135	151,200
2-1/4	7	137	105,300	180	201,600	127	127,800	163	112,500	157	175,000
2-1/2	7-1/2	158	119,700	206	226,800	146	145,800	187	128,700	180	199,800
2-5/8	8	179	135,000	235	252,900	166	164,700	213	144,000	205	227,700
2-7/8	8-1/2	202	153,000	265	280,800	188	183,600	241	162,000	231	254,200
3	9	227	171,000	297	309,600	211	204,300	270	180,000	259	282,100
3-1/4	10	280	207,000	368	370,800	260	248,400	333	219,600	320	318,600
3-1/2	11	339	252,000	443	436,500	315	296,100	403	261,000	387	378,800
4	12	403	297,000	527	506,700	374	348,300	480	303,000	461	446,400
4-1/4	13	473	342,000	619	581,400	-	-	-	-	541	517,500
4-5/8	14	549	396,000	718	659,700	-	-	-	-	627	592,200
5	15	630	450,000	820	742,500	-	-	-	-	720	673,200
5-1/4	16	-	-	-	-	-	-	-	-	819	758,200
5-1/2	17	-	-	-	-	-	-	-	-	925	847,300
6	18	-	-	-	-	-	-	-	-	1,040	940,500
6-1/4	19	-	-	-	-	-	-	-	-	1,160	1,039,500
6-1/2	20	-	-	-	-	-	-	-	-	1,280	1,140,300
7	21	-	-	-	-	-	-	-	-	1,410	1,247,400

[4]Data provided by Samson Ocean System Company. Breaking strength values are reduced 10%.

NOTE: Breaking strength values are based on laboratory tests of new and unused ropes. All ropes will deteriorate somewhat as they age.

Table 7. Weight and Breaking Strength of Kevlar 29 Synthetic Fiber Cables

DIA. (IN.)	PHILLYSTRAN-6X19 I.P.C.[1] (INDEPENDENT PHILLYSTRAN CORE) NO. OF STRANDS:6 NO. OF FIBERS PER STRAND:19 POLYURETHANE JACKET		PHILLYSTRAN 6X7 LARGE DIAMETER CABLE[1] NO. OF STRANDS:6 NO. OF FIBERS PER STRAND:7 POLYPROPYLENE CORE POLYURETHANE JACKET		PHILLYSTRAN 18X7 LARGE DIAMETER CABLE[1] NO. OF STRANDS:18 NO. OF FIBERS PER STRAND:7 POLYPROPYLENE CORE POLYURETHANE JACKET	
	WT. LB/ 100 FT.	MIN. BREAKING STRENGTH (LB.)	WT. LB/ 100 FT.	CALC. BREAKING STRENGTH (LB.)	WT. LB/ 100 FT.	CALC. BREAKING STRENGTH (LB.)
0.62	11.0	30,000	-	-	-	-
0.71	13.0	36,000	-	-	-	-
0.74	15.5	42,000	-	-	-	-
0.89	21.5	55,000	-	-	-	-
1.4	-	-	40.0	94,000	-	-
1.7	-	-	57.0	132,000	-	-
1.9	-	-	76.0	180,000	-	-
2.2	-	-	92.0	216,000	-	-
2.3	-	-	122.0	252,000	-	-
2.7	-	-	145.0	340,000	-	-
2.8	-	-	-	-	155.0	370,000
2.9	-	-	175.0	396,000	-	-
3.2	-	-	203.0	462,000	200.0	510,000
3.6	-	-	-	-	253.0	610,000
3.8	-	-	-	-	285.0	710,000
4.5	-	-	-	-	410.0	935,000

[1]Data provided by Philadelphia Resins Corp.

NOTE: Breaking strength values are based on laboratory tests of new and unused ropes. All ropes will deteriorate somewhat as they age.

Table 8. Comparsion of Physical Characteristics -- Natural and Synthetic Fiber Ropes [1]

ROPE MATERIAL:	Manila-3 Strand		Sisal-3 Strand		Nylon-3 Strand		Kevlar-12 Strand	
Manufactured or derived from:	Abaca Plant-3' to 6' leaf fibers		Agave Sisaliana plant -2' to 4' leaf fibers		Hexamethalene diamine and adipic acid derived from coke, air, water, and petroleum products		Generic name aramid-aromatic polyamide fibers	
ROPE DIAMETER:	1"	3"	1"	3"	1"	3"	1"	2"
Strength Characteristics:								
1. Tensile strength dry	8,100	57,600	6,480	46,080	22,500	180,000	63,000	214,000
2. Recommended factor of safety[2]	6[2]	6[2]	6[2]	6[2]	9[2]	9[2]	9[2]	9[2]
3. Working strength[2]	1,350[2]	9,600[2]	1,080[2]	7,680[2]	2,500[2]	20,000[2]	7,000[2]	23,800[2]
4. Wet strength versus dry strength (percent)	up to 120%	up to 120%	up to 120%	up to 120%	90-95%	90-95%	95%	95%
5. Strength per unit of weight (tensile strength/ lbs per foot)	30,000	23,800	24,000	19,000	86,500	85,700	210,000	181,000
6. Rope shock load absorption ability	poor	poor	poor	poor	excellent	excellent	poor	poor
7. Repeat loading capabilities	poor	poor	poor	poor	very good	very good	very good	very good
8. Individual filament or fiber strength (grams per denier)	5.0-7.0	5.0-7.0	4.0-5.0	4.0-5.0	8.0-9.0	8.0-9.0	18.0	18.0
Weight & Density Characteristics:								
1. Pounds per 100 feet	27	242	27	242	26	210	30	118
2. Specific gravity of fiber	1.5	1.5	1.4	1.4	1.14	1.14	1.44	1.44
3. Ability to float	no	no	no	no	no	no	no	no
Elasticity - Stretch:								
1. Permanent elongation at working loads (break-in)	5%	5%	5%	5%	8%	8%	-	-
2. Working elasticity at working load (recoverable stretch under load)	5%	5%	5%	5%	16%	16%	14% Includes permanent elongation	14% Includes permanent elongation
3. Elongation at 100% load (at break) used rope	13%	13%	13%	13%	35%	35%	over 21%	over 21%
4. Creep (elongation under sustained load)	very low	very low	very low	very low	moderate	moderate	very low	very low
Surface Characteristics:								
1. Rope feeling to touch	some harshness due to hairs. after use considerable harshness due to broken fiber ends		same as Manila		smooth. after use becomes fuzzy with a softer feel		smooth and somewhat sticky but not slippery. after use becomes fuzzier than nylon or polyester	
2. Rendering qualities (ability of rope to ease out smoothly under load around bitts or capstan heads)	excellent		good		fair		very poor	

[1] Data provided by Wall, Columbian, American, Tubbs/Jackson, and Samson Rope Companies and E.I. Dupont.

[2] Working loads and factors of safety are as recommended by the Cordage Institute and from manufacturers' minimum catalog breaking strength values. These values are based on a percentage of the minimum breaking test of new and unused rope of current manufacture as follows: nylon and kevlar - 11%; polyester, polypropylene, polyethylene, manila, and sisal-17%. These values are based on normal service conditions and do not cover exceptional conditions such as shock loads, sustained loads, etc., nor do they cover conditions where life, limb, or valuable property are involved. In these cases a lower working load or higher factor of safety may be advisable. A higher working load or lower factor of safety should be used only with an expert knowledge of conditions or professional estimates of risk. The factors of safety given are for 3/4 inch dia. rope and larger. Smaller ropes should have larger safety factors; up to 12 for nylon and kevlar and up to 10 for the remainder.

Table 8. Comparison of Physical Characteristics -- Natural and Synthetic Fiber Ropes [1] (Continued)

ROPE MATERIAL:	Polyester 3 strand		Polypropylene monofilament 3 strand		Polypropylene multifilament 3 strand		Polyethylene 3 strand	
Manufactured or derived from:	Ethylene Glycol & Terephthalic acid		Propane		Propane		Polymers and copolymers of ethylene	
ROPE DIAMETER:	1"	3"	1"	3"	1"	3"	1"	3"
Strength Characteristics:								
1. Tensile strength dry	19,800	157,000	12,600	103,000	11,470	93,730	11,470	93,730
2. Recommended factor of safety[2]	6[2]	6[2]	6[2]	6[2]	6[2]	6[2]	6[2]	6[2]
3. Working strength[2]	3,300[2]	26,170[2]	2,100[2]	17,200[2]	1,900[2]	15,600[2]	1,900[2]	15,600[2]
4. Wet strength versus dry strength (percent)	100%	100%	102-105%	102-105%	102-105%	102-105%	102-105%	102-105%
5. Strength per unit of weight (tensile strength/ lbs per foot)	66,000	60,900	70,000	67,300	58,800	57,200	62,000	58,900
6. Rope shock load absorption ability	good	good	very good	very good	very good	very good	fair	fair
7. Repeat loading capabilities	excellent	excellent	very good	very good	very good	very good	fair	fair
8. Individual filament or fiber strength (grams per denier)	7.5-9.0	7.5-9.0	6.0-7.5	6.0-7.5	5.0-6.5	5.0-6.5	5.5-7.0	5.5-7.0
Weight & Density Characteristics:								
1. Pounds per 100 feet	30	258	18	153	19-1/2	164	18-1/2	159
2. Specific gravity of fiber	1.38	1.38	0.91	0.91	0.91	0.91	0.95	0.95
3. Ability to float	no	no	yes	yes	yes	yes	yes	yes
Elasticity - Stretch:								
1. Permanent elongation at working loads (break-in)	6%	6%	4%	4%	7-1/2%	7-1/2%	6%	6%
2. Working elasticity at working load (recoverable stretch under load)	6%	6%	9%	9%	10-1/2%	10-1/2%	6%	6%
3. Elongation at 100% load (at break) used rope	20%	20%	24%	24%	36%	36%	22%	22%
4. Creep (elongation under sustained load)	low	low	high	high	high	high	high	high
Surface Characteristics:								
1. Rope feeling to touch	smooth & hard, not slippery, after use becomes fuzzy with a softer feel		smooth but not slippery, after use becomes harsh due to broken fiber ends		smooth and soft with some natural fuzziness, remains same after use		smooth and very slippery, after use becomes slightly harsh due to broken fiber ends	
2. Rendering qualities (ability of rope to ease out smoothly under load around)	good		poor		fair		good but requires extra wraps	

[1] Data provided by Wall, Columbian, American, Tubbs/Jackson, and Samson Rope Companies and E.I. Dupont.

[2] Working loads and factors of safety are as recommended by the Cordage Institute and from manufacturers' minimum catalog breaking strength values. These values are based on a percentage of the minimum breaking test of new and unused rope of current manufacture as follows: nylon and kevlar - 11%; polyester, polypropylene, polyethylene, manila, and sisal-17%. These values are based on normal service conditions and do not cover exceptional conditions such as shock loads, sustained loads, etc., nor do they cover conditions where life, limb, or valuable property are involved. In these cases a lower working load or higher factor of safety may be advisable. A higher working load or lower factor of safety should be used only with an expert knowledge of conditions or professional estimates of risk. The factors of safety given are for 3/4 inch dia. rope and larger. Smaller ropes should have larger safety factors; up to 12 for nylon and kevlar and up to 10 for the remainder.

Table 8. Comparison of Physical Characteristics — Natural and Synthetic Fiber Ropes [1] (Continued)

ROPE MATERIAL:	Manila 3 strand	Sisal 3 Strand	Nylon 3 Strand	Kevlar 12 Strand
Water Absorption: (some water will be held between fibers of all ropes)	up to 100% of weight of rope	up to 100% of weight of rope	up to 9%	less than 1%
Flexure:				
1 Dry	good	good	superior	excellent
2. Wet	good	good	excellent	excellent
Resistance to Rot, Mildew, & Attack by Marine Organisms:	poor	very poor	excellent	excellent
Wear:				
1. Resistance to surface abrasion	good	fair	very good	poor
2. Resistance to internal wear from flexing	good	very good	excellent	poor to fair
3. Resistance to cutting (toughness)	good	poor	excellent	excellent
High & Low Temperature Properties:				
1. Melting point	progressive strength Loss above 160°F. chars at 275°F	same as Manila	480°F. progressive strength loss above 300°F	does not melt, carbonizes at about 800°F
2. High temperature working limit	200°F	200°F	300°F	400°F
3. Low temperature working limit	-100°F	-100°F	-70°F	-320°F
4. Flammability	burns like wood	burns like wood	burns with difficulty	does not burn
Deterioration:				
1. Due to aging (properly stored ropes)	about 1% per year	about 1% per year	zero	zero
2. Due to exposure to sunlight (ultraviolet rays)	some slight	some slight	some slight	poor
Chemical Resistance:				
1. To acids	very poor	very poor	fair, except to concentrated sulphuric & hydrochloric acids.	fair, except to concentrated sulphuric and nitric acids
2. To alkalis	very poor	very poor	excellent	very good to excellent, slight deterioration from sodium hydroxide
3. To organic solvents	good but hydrocarbons will remove protective rope lubricants	same as Manila	good, soluble in some phenolic compounds and in 90% formic acid	excellent

[1] Data provided by Wall, Columbian, American, Tubbs/Jackson, and Samson Rope Companies and E.I. Dupont.

[2] Working loads and factors of safety are as recommended by the Cordage Institute and from manufacturers' minimum catalog breaking strength values. These values are based on a percentage of the minimum breaking test of new and unused rope of current manufacture as follows: nylon and kevlar - 11%; polyester, polypropylene, polyethylene, manila, and sisal-17%. These values are based on normal service conditions and do not cover exceptional conditions such as shock loads, sustained loads, etc., nor do they cover conditions where life, limb, or valuable property are involved. In these cases a lower working load or higher factor of safety may be advisable. A higher working load or lower factor of safety should be used only with an expert knowledge of conditions or professional estimates of risk. The factors of safety given are for 3/4 inch dia. rope and larger. Smaller ropes should have larger safety factors; up to 12 for nylon and kevlar and up to 10 for the remainder.

Table 8. Comparison of Physical Characteristics — Natural and Synthetic Fiber Ropes [1] (Continued)

ROPE MATERIAL:	Polyester 3 Strand	Polypropylene Monofilament 3 Strand	Polypropylene Multifilament 3 Strand	Polyethylene 3 Strand
Water Absorption: (some water will be held between fibers of all ropes)	less than 1%	zero	zero	zero
Flexure:				
1. Dry	excellent	very good	very good	very good
2. Wet	superior	excellent	excellent	very good
Resistance to Rot, Mildew, & Attack by Marine Organisms:	excellent	excellent	excellent	excellent
Wear:				
1. Resistance to surface abrasion	excellent	good	good	good
2. Resistance to internal wear from flexing	very good to excellent	very good	very good	very good
3. Resistance to cutting (toughness)	very good to excellent	good	very good	good
High & Low Temperature Properties:				
1. Melting point	482°F. progressive strength loss above 300°F	330°F. softens above 300°F	330°F. softens above 300°F	280°F. softens above 250°F
2. High temperature working limit	300°F	200°F	200°F	150°F
3. Low temperature working limit	-70°F	-20°F	-20°F	-100°F
4. Flammability	burns with difficulty	burns with difficulty	burns with difficulty	burns with difficulty
Deterioration:				
1. Due to aging (properly stored ropes)	zero	zero	zero	zero
2. Due to exposure to sunlight (ultraviolet rays)	almost none	some, black is best	some, black is best	some, black is best
Chemical Resistance:				
1. To acids	very good to excellent, except for concentrated sulphuric acid.	excellent	excellent	excellent, except for concentrated sulphuric acid
2. To alkalis	very good, except to concentrated sodium hydroxide at high temperature	excellent	excellent	excellent
3. To organic solvents	very good to excellent, soluble in some phenolic compounds	fair, soluble in chlorinated hydrocarbons at 160°F	same as polypropylene monofilament	same as polypropylene monofilament

[1] Data provided by Wall, Columbian, American, Tubbs/Jackson, and Samson Rope Companies and E.I. Dupont.

[2] Working loads and factors of safety are as recommended by the Cordage Institute and from manufacturers' minimum catalog breaking strength values. These values are based on a percentage of the minimum breaking test of new and unused rope of current manufacture as follows: nylon and kevlar - 11%; polyester, polypropylene, polyethylene, manila, and sisal-17%. These values are based on normal service conditions and do not cover exceptional conditions such as shock loads, sustained loads, etc., nor do they cover conditions where life, limb, or valuable property are involved. In these cases a lower working load or higher factor of safety may be advisable. A higher working load or lower factor of safety should be used only with an expert knowledge of conditions or professional estimates of risk. The factors of safety given are for 3/4 inch dia. rope and larger. Smaller ropes should have larger safety factors; up to 12 for nylon and kevlar and up to 10 for the remainder.

Table 9. Weight and Breaking Strength of Wire Rope for Marine Service

ROPE DIA. (IN.)	6X3X7 AND 6X3X19 SPRING LAY-GALVANIZED AND PREFORMED[1]		6x12 RUNNING ROPE[2] STRANDS: 6 WIRES PER STRAND: 12 STRAND CTRS: FIBER CORE: FIBER GRADE: PLOW ST'L LAY: RIGHT,LEFT;REG FINISH: GALVANIZED		6x24 MOORING LINE[2] STRANDS: 6 WIRES PER STRAND: 24 STRAND CTRS: FIBER CORE: FIBER GRADE: PLOW ST'L LAY: RIGHT,LEFT;REG. FINISH: GALVANIZED		6x37 HAWSER AND MOORING LINE[2] STRANDS: 6 WIRES PER STRAND: 27TO49 CORE: FIBER GRADE: MONITOR ST'L LAY:RIGHT,LEFT;REGULAR FINISH: GALVANIZED	
	WT/FT (LBS)	BREAKING[3] STRENGTH (POUNDS)	WT/FT (LBS)	BREAKING[3] STRENGTH (POUNDS)	WT/FT (LBS)	BREAKING[3] STRENGTH (POUNDS)	WT/FT (LBS)	BREAKING[3] STRENGTH (POUNDS)
3/8	0.12	5,060	-	-	-	-	-	-
1/2	0.22	8,940	-	-	-	-	0.42	19,260
9/16	0.28	11,280	-	-	-	-	0.53	24,400
5/8	0.34	13,900	-	-	-	-	0.66	30,000
3/4	0.49	19,920	0.59	22,800	0.78	32,400	0.95	42,800
13/16	-	-	0.69	26,600	0.91	38,000	1.11	50,000
7/8	0.63	27,000	0.80	30,600	1.06	43,800	1.29	58,000
1	0.88	35,000	1.05	40,000	1.38	57,000	1.68	75,200
1-1/16	-	-	1.19	45,000	1.56	64,200	1.90	84,800
1-1/8	1.14	44,200	1.33	50,400	1.75	71,800	2.13	94,600
1-3/16	-	-	1.48	56,000	1.95	79,800	2.37	105,200
1-1/4	1.36	54,400	1.64	61,800	2.16	88,200	2.63	116,200
1-3/8	1.66	65,600	1.99	74,400	2.61	106,200	3.18	139,800
1-7/16	-	-	2.17	81,200	2.85	115,800	3.47	152,400
1-1/2	1.97	77,800	2.36	88,200	3.11	125,800	3.78	165,600
1-5/8	2.28	91,200	2.77	102,800	3.64	146,800	4.44	192,600
1-11/16	-	-	2.99	110,600	3.93	158,000	4.78	208,000
1-3/4	2.67	105,400	3.22	118,800	4.23	169,600	5.15	224,000
1-13/16	-	-	3.45	127,000	4.53	181,600	5.52	238,000
1-7/8	3.09	120,600	3.69	135,600	4.85	193,800	5.91	254,000
1-15/16	-	-	3.94	144,400	5.18	206,000	6.31	270,000
2	3.53	137,000	4.20	153,400	5.52	220,000	6.72	288,000
2-1/16	-	-	4.47	162,800	5.87	232,000	7.15	304,000
2-1/8	-	-	-	-	6.23	246,000	7.59	322,000
2-1/4	4.56	172,600	-	-	6.99	276,000	8.51	360,000
2-5/16	-	-	-	-	-	-	8.98	380,000
2-3/8	-	-	-	-	7.78	306,000	9.48	400,000
2-1/2	5.44	212,000	-	-	8.63	336,000	10.5	440,000
2-5/8	-	-	-	-	-	-	11.6	482,000
2-3/4	-	-	-	-	-	-	12.7	526,000
2-7/8	-	-	-	-	-	-	13.9	570,000
3	-	-	-	-	-	-	15.1	620,000
3-1/8	-	-	-	-	-	-	16.4	668,000
3-1/4	-	-	-	-	-	-	17.7	718,000
3-3/8	-	-	-	-	-	-	19.1	768,000
3-1/2	-	-	-	-	-	-	20.6	822,000
REMARKS:	USE FOR SPRING MOORING LINES		USE FOR LIGHT TOWING & MOORING SERVICE		USE FOR MEDIUM TOWING & MOORING SERVICE		USE FOR HEAVY DUTY TOWING & MOORING SERVICE	

[1]Data provided by National Supply Co.

[2]Data provided by United States Steel (Tiger brand wire rope).

[3]The recommended factor of safety for new and unused wire rope is 5.

Table 9. Weight and Breaking Strength of Wire Rope for Marine Service (Continued)

TORQUE - BALANCED ROPES WITH AND WITHOUT SYNTHETIC JACKETS[2]
GRADE: BRIGHT OR MONITOR AA STEEL

3X19 - 3 STRANDS, 19 WIRES PER STRAND
3X46 - 3 STRANDS, 46 WIRES PER STRAND

	WITHOUT JACKET				WITH JACKET					
	3X19 CONSTRUCTION		3X46 CONSTRUCTION		JACKET DIMENSIONS		POLYURETHANE JACKET WT/FT (LBS)		POLYETHYLENE JACKET WT/FT (LBS)	
ROPE DIA. (IN.)	WT/FT (LBS)	BREAKING[3] STRENGTH (POUNDS)	WT/FT (LBS)	BREAKING[3] STRENGTH (POUNDS)	THICKNESS (IN.)	O.D. (IN.)	FOR 3X19	FOR 3X46	FOR 3X19	FOR 3X46
3/8	0.22	14,800	-	-	0.032	0.46	0.26	-	0.25	-
1/2	0.39	25,700	0.42	25,700	0.08	0.69	0.51	0.54	0.48	0.51
9/16	0.49	32,500	0.52	32,500	0.08	0.75	0.63	0.66	0.60	0.62
5/8	0.60	40,300	0.63	40,300	0.08	0.81	0.76	0.79	0.72	0.75
3/4	0.88	57,800	0.90	57,800	0.08	0.94	1.08	1.10	1.03	1.05
13/16	-	-	-	-	-	-	-	-	-	-
7/8	1.21	78,000	1.27	78,000	0.08	1.08	1.46	1.52	1.40	1.46
1	1.56	100,600	1.64	100,600	0.08	1.20	1.87	1.95	1.79	1.87
1-1/16	-	-	-	-	-	-	-	-	-	-
1-1/8	1.96	124,000	2.07	124,000	0.08	1.33	2.32	2.44	2.23	2.34
1-3/16	-	-	-	-	-	-	-	-	-	-
1-1/4	-	-	2.60	158,000	0.11	1.51	-	3.08	-	2.96
1-3/8	-	-	3.10	188,000	0.11	1.64	-	3.65	-	3.51
1-7/16	-	-	-	-	-	-	-	-	-	-
1-1/2	-	-	3.69	222,000	0.11	1.78	-	4.35	-	4.18
1-5/8	-	-	4.43	265,000	0.11	1.94	-	5.19	-	5.00
1-11/16	-	-	-	-	-	-	-	-	-	-
1-3/4	-	-	5.12	304,000	0.11	2.06	-	5.97	-	5.75
1-13/16	-	-	-	-	-	-	-	-	-	-
1-7/8	-	-	-	-	-	-	-	-	-	-
1-15/16	-	-	-	-	-	-	-	-	-	-
2	-	-	-	-	-	-	-	-	-	-
2-1/16	-	-	-	-	-	-	-	-	-	-
2-1/8	-	-	-	-	-	-	-	-	-	-
2-1/4	-	-	-	-	-	-	-	-	-	-
2-5/16	-	-	-	-	-	-	-	-	-	-
2-3/8	-	-	-	-	-	-	-	-	-	-
2-1/2	-	-	-	-	-	-	-	-	-	-
2-5/8	-	-	-	-	-	-	-	-	-	-
2-3/4	-	-	-	-	-	-	-	-	-	-
2-7/8	-	-	-	-	-	-	-	-	-	-
3	-	-	-	-	-	-	-	-	-	-
3-1/8	-	-	-	-	-	-	-	-	-	-
3-1/4	-	-	-	-	-	-	-	-	-	-
3-3/8	-	-	-	-	-	-	-	-	-	-
3-1/2	-	-	-	-	-	-	-	-	-	-

REMARKS: USE FOR OCEANOGRAPHIC OPERATIONS - DEEP SEA MOORING AND ANCHORS. ALSO SUITABLE FOR HOISTING, HAULING, RIGGING, AND SALVAGE WORK.

[1] Data provided by National Supply Co.

[2] Data provided by United States Steel (Tiger brand wire rope).

[3] The recommended factor of safety for new and unused wire rope is 5.

3. Chain and Fittings. The following tables present dimensional, weight, and strength data for a variety of chains which can be used in mooring systems. For some types of chain, several grades are available. These grades are associated with different strength and durability characteristics of the steel used in fabrication. The strengths of the fittings for a the particular size (diameter) of chain generally should equal or exceed the strength of the highest grade of chain size under consideration.

Table 10 describes the tolerances, markings, and general notes which apply to commercially available chain and fittings. Supplemental information for standard mooring system components is presented at the beginning of Section 6.

The preferred chains for mooring systems are Navy Common A-Link Chains (see Section 6) and A.B.S. Stud Link Chain.

Table 10. A.B.S. Tolerances, Markings, and General Notes [1]

CHAIN TOLERANCES

a) A plus tolerance not to exceed 1/32 inch in diameter is allowed on chains up to and including 1-1/2 inches diameter. Above 1-1/2 inches diameter, a maximum plus tolerance of 1/16 inch in diameter is allowed.

b) The allowable tolerance for the length over any five common links is 0.0% of the chain diameter below and 55% of the chain diameter above the length given in Table 11.

c) The weight of the chain is not to be more than 2-1/2% under, nor more than 5% over the weight specified in Table 11.

d) Should the measured tolerances exceed the allowances given above such chain may be accepted subject to the approval of the purchaser.

MARKINGS FOR CHAIN AND FITTINGS

The end links in each length or shot and one link in every 15 fathoms of stud link chain made in a continuous length without joining shackles or studless joining links are to be clearly stamped by the manufacturer as shown below. The opposite side shall be used for the maker's name.

Joining links, shackles, end links, ground rings, swivels, swivel rings, spiders, and release hooks shall be marked in a similar manner.

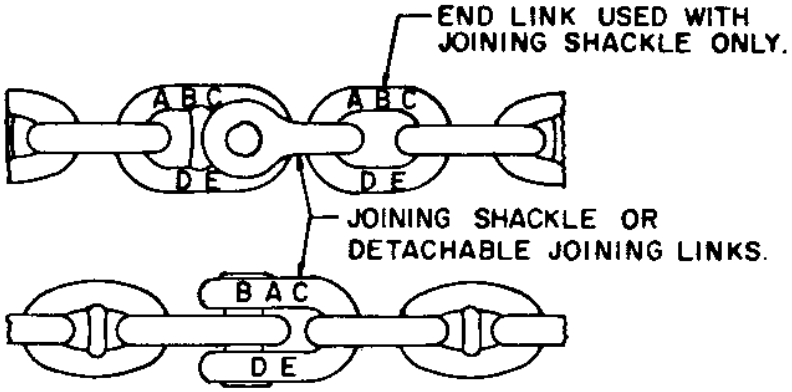

A	The initials of the inspector who witnessed the test	SJD
B	The number of the test certificate	PT1234
C	Month and year of test	12-77
D	Signifying that the chain has been satisfactorily tested to the American Bureau of Shipping testing requirements	AB/1, AB/2, or AB/3
E	Nominal chain diameter in inches (When chain manufacturers emboss the chain diameter in a permanent manner by some suitable means, such as forging or casting, marking of the chain diameter in location E may be omitted.)	

[1] Developed from the American Bureau of Shipping Rules For Building and Classing Steel Vessels, Section 43.

Table 10. A.B.S. Tolerances, Markings, and General Notes [1] (Continued)

MARKINGS FOR ANCHORS

One side of the anchor should be reserved solely for the marks shown below and the other side used for the maker's name. If the design of the anchor does not allow these marks to be placed or grouped as indicated, a plate with the required marks stamped in it should be fastened at the appropriate location on the anchor.

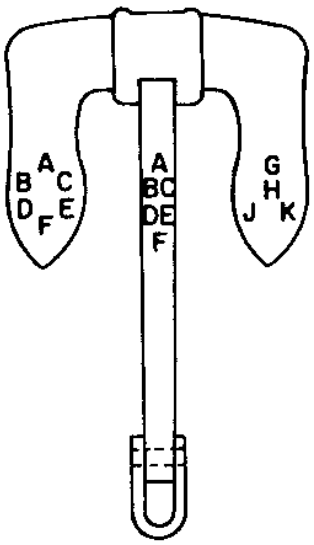

A	The number of the test certificate	69-PA123
B	The initials of the inspector who witnessed the proof test	X.Y.Z.
C	Month and year of test	6-77
D	Proof test applied (lbs.)	34680
E	Signifying that the testing machine is recognized by the committee of the American Bureau of Shipping	AB
F	The weight of anchor (lbs.)	1906
G	Signifying that the anchor head has been tested by an inspector to the American Bureau of Shipping requirements	AB
H	The weight of anchor head (lbs.)	1140
J	The initials of the inspector who witnessed the drop test	X.Y.Z.
K.	Month and year of drop test	6-77

[1] Developed from the American Bureau of Shipping Rules For Building and Classing Steel Vessels, Section 43.

Table 10. A.B.S. Tolerances, Markings, and General Notes (Continued)

GENERAL NOTES

a) Chain, anchor, and fitting manufacture, materials, and testing requirements shall conform to the applicable sections and requirements of the American Bureau of Shipping's Rules for Building and Classing Steel Vessels, latest edition for ABS Grades 1, 2, and 3 above.

b) All markings shall be raised letters or figures of a size permitted by the space available but not to exceed 3/4 of an inch in height or by 1/8 inch raised relief.

[1] Developed from the American Bureau of Shipping Rules For Building and Classing Steel Vessels, Section 43.

Table 11. Chain A.B.S. Stud Link [1]

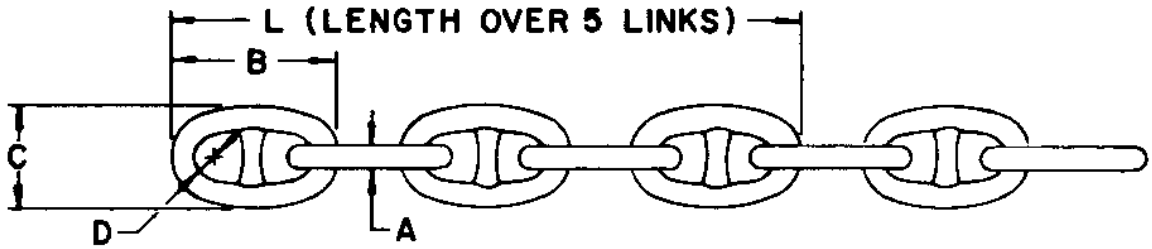

DIMENSIONS IN INCHES					NO. OF LINKS PER 15 FATHOM SHOT	WEIGHT PER 15 FM SHOT (APPROX.) (POUNDS)	TEST REQUIREMENTS (POUNDS)					
							GRADE 1		GRADE 2[2]		GRADE 3[3]	
CHAIN SIZE A	B	C	D	L			PROOF TEST	BREAK TEST	PROOF TEST	BREAK TEST	PROOF TEST	BREAK TEST
1/2	3	1-13/16		11	540	230	10700	15300	15300	21400	21400	30600
9/16	3-3/8	2		12-3/8	480	290	13500	19300	19300	27000	27000	38600
5/8	3-3/4	2-1/4		13-3/4	432	370	16600	23700	23700	33200	33200	47500
11/16	4-1/8	2-1/2		15-1/8	393	410	20100	28600	28600	40100	40100	57300
3/4	4-1/2	2-5/8	1/2	16-1/2	357	480	23800	34000	34000	47600	47600	68000
13/16	4-7/8	2-7/8	17/32	17-7/8	329	570	27800	39800	39800	55700	55700	79500
7/8	5-1/4	3-1/8	37/64	19-1/4	305	660	32200	46000	46000	64400	64400	91800
15/16	5-5/8	3-5/16	5/8	20-5/8	285	760	36800	52600	52600	73700	73700	105000
1	6	3-9/16	21/32	22	267	860	41800	59700	59700	83600	83600	119500
1-1/16	6-3/8	3-3/4	11/16	23-3/8	251	970	47000	67200	67200	94100	94100	135000
1-1/8	6-3/4	4	25/32	24-3/4	237	1080	52600	75000	75000	105000	105000	150000
1-3/16	7-1/8	4-1/4	25/32	26-1/8	225	1220	58400	83400	83400	116500	116500	167000
1-1/4	7-1/2	4-1/2	25/32	27-1/2	213	1350	64500	92200	92200	129000	129000	184000
1-5/16	7-7/8	4-3/4	7/8	28-7/8	203	1490	70900	101500	101500	142000	142000	203000
1-3/8	8-1/4	4-15/16	7/8	30-1/4	195	1630	77500	111000	111000	155000	155000	222000
1-7/16	8-5/8	5-3/16	15/16	31-5/8	187	1780	84500	120500	120500	169000	169000	241000
1-1/2	9	5-3/8	63/64	33	179	1940	91700	131000	131000	183500	183500	262000
1-9/16	9-3/8	5-5/8	1-1/32	34-3/8	171	2090	99200	142000	142000	198500	198500	284000
1-5/8	9-3/4	5-7/8	1-1/16	35-3/4	165	2240	108000	153000	153000	214000	214000	306000
1-11/16	10-1/8	6-1/16	1-3/32	37-1/8	159	2410	115000	166500	166500	229000	229000	327000
1-3/4	10-1/2	6-5/16	1-5/32	38-1/2	153	2590	123500	176000	176000	247000	247000	352000
1-13/16	10-7/8	6-1/2	1-3/16	39-7/8	147	2790	132000	188500	188500	264000	264000	377000
1-7/8	11-1/4	6-3/4	1-1/4	41-1/4	143	2980	140500	201000	201000	281000	281000	402000
1-15/16	11-5/8	7	1-9/32	42-5/8	139	3180	149500	214000	214000	299000	299000	427000
2	12	7-3/16	1-5/16	44	133	3360	159000	227000	227000	318000	318000	454000
2-1/16	12-3/8	7-7/16	1-3/8	45-3/8	129	3570	168500	241000	241000	337000	337000	482000
2-1/8	12-3/4	7-5/8	1-27/64	46-3/4	125	3790	178500	255000	255000	357000	357000	510000
2-3/16	13-1/8	7-7/8	1-15/32	48-1/8	123	4020	188500	269000	269000	377000	377000	538000
2-1/4	13-1/2	8-1/8	1-1/2	49-1/2	119	4250	198500	284000	284000	396000	396000	570000
2-5/16	13-7/8	8-5/16	1-17/32	50-7/8	117	4490	209000	299000	299000	418000	418000	598000
2-3/8	14-1/4	8-9/16	1-9/16	52-1/4	113	4730	212000	314000	314000	440000	440000	628000
2-7/16	14-5/8	8-3/4	1-5/8	53-5/8	111	4960	231000	330000	330000	462000	462000	660000
2-1/2	15	9	1-5/8	55	107	5270	242000	346000	346000	484000	484000	692000
2-9/16	15-3/8	9-1/4	1-11/16	56-3/8	105	5540	254000	363000	363000	507000	507000	726000

[1] Data provided by Baldt, Inc. and Vicinay International Co., Inc. A.B.S. denotes American Bureau of Shipping. For markings and general notes, see Table 10.

[2] U.S. Navy Grade 2 chain that is stocked for use in the standard free-swinging, fleet-type mooring has slightly higher strength requirements.

[3] U.S. Navy Grade FM 3 is comparable to A.B.S. Grade 3 but is more ductile.

Table 11. Chain A.B.S. Stud Link [1] (Continued)

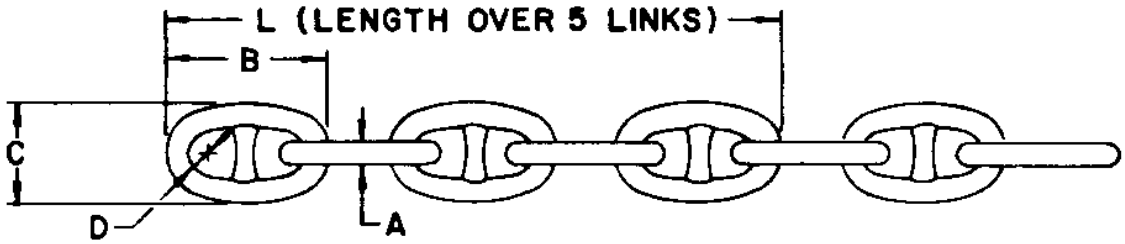

DIMENSIONS IN INCHES					NO. OF LINKS PER 15 FATHOM SHOT	WEIGHT PER 15 FM SHOT (APPROX.) (POUNDS)	TEST REQUIREMENTS (POUNDS)					
							GRADE 1		GRADE 2[2]		GRADE 3[3]	
CHAIN SIZE A	B	C	D	L			PROOF TEST	BREAK TEST	PROOF TEST	BREAK TEST	PROOF TEST	BREAK TEST
2-5/8	15-3/4	9-7/16	1-11/16	57-3/4	103	5820	265000	379000	379000	530000	530000	758000
2-11/16	16-1/8	9-11/16	1-3/4	59-1/8	99	6110	277000	396000	396000	554000	554000	792000
2-3/4	16-1/2	9-7/8	1-13/16	60-1/2	97	6410	289000	413000	413000	578000	578000	826000
2-13/16	16-7/8	10-1/8	1-27/32	61-7/8	95	6710	301000	431000	431000	603000	603000	861000
2-7/8	17-1/4	10-3/8	1-7/8	63-1/4	93	7020	314000	449000	449000	628000	628000	897000
2-15/16	17-5/8	10-9/16	1-7/8	64-5/8	91	7330	327000	467000	467000	654000	654000	934000
3	18	10-13/16	2	66	89	7650	340000	485000	485000	679000	679000	970000
3-1/16	18-3/8	11	2	67-3/8	87	7980	353000	504000	504000	705000	705000	1008000
3-1/8	18-3/4	11-1/4	2-1/16	68-3/4	85	8320	366000	523000	523000	732000	732000	1046000
3-3/16	19-1/8	11-1/2	2-1/16	70-1/8	85	8660	380000	542000	542000	759000	759000	1084000
3-1/4	19-1/2	11-11/16	2-1/8	71-1/2	83	9010	393000	562000	562000	787000	787000	1124000
3-5/16	19-7/8	11-15/16	2-1/8	72-7/8	81	9360	407000	582000	582000	814000	814000	1163000
3-3/8	20-1/4	12-1/8	2-3/16	74-1/4	79	9730	421000	602000	602000	843000	843000	1204000
3-7/16	20-5/8	12-3/8	2-3/16	75-5/8	77	10100	435000	622000	622000	871000	871000	1244000
3-1/2	21	12-5/8	2-5/16	77	77	10500	450000	643000	643000	900000	900000	1285000
3-5/8	21-3/4	12-15/16	2-5/16	79-3/4	73	11300	479000	685000	685000	958000	958000	1369000
3-3/4	22-1/2	13-3/8	2-15/32	82-1/2	71	12000	509000	728000	728000	1019000	1019000	1455000
3-7/8	23-1/4	14	2-15/32	85-1/4	69	12900	540000	772000	772000	1080000	1080000	1543000
4	24	14-3/8	2-5/8	88	67	13700	571000	816000	816000	1143000	1143000	1632000
4-1/8	24-3/4	14-7/8	2-11/16	90-3/4	65	14600	603000	862000	862000	1207000	1207000	1724000
4-1/4	25-1/2	15-5/16	2-3/4	93-1/2	63	15400	636000	908000	908000	1272000	1272000	1817000
4-3/8	26-1/4	15-3/4	2-7/8	96-1/4	61	16200	669000	956000	956000	1338000	1338000	1911000
4-1/2	27	16-3/16	2-15/16	99	59	17100	703000	1004000	1004000	1405000	1405000	2008000
4-5/8	27-3/4	16-5/8	3	101-3/4	58	18000	737000	1053000	1053000	1474000	1474000	2105000
4-3/4	28-1/2	17-1/8	3-1/8	104-1/2	57	18900	772000	1102000	1102000	1543000	1543000	2204000
4-7/8	29-1/4	17-9/16	3-3/16	107-1/4	55	19900	807000	1153000	1153000	1613000	1613000	2305000
5	30	18	3-9/32	110	54	20900	842000	1203000	1203000	1685000	1685000	2407000
5-1/8	30-3/4	18-7/16	3-3/8	112-3/4	53	22000	878000	1255000	1255000	1757000	1757000	2509000
5-3/8	32-1/4	19-3/8	3-17/32	118-1/4	50	24000	951000	1359000	1359000	1903000	1903000	2718000
5-5/8	33-3/4	20-1/4	3-11/16	123-3/4	48	26100	1026000	1466000	1466000	2052000	2052000	2932000
5-3/4	34-1/2	20-11/16	3-3/4	126-1/2	47	27000	1064000	1520000	1520000	2128000	2128000	3039000
6	36	21-5/8	3-15/16	132	45	29100	1140000	1629000	1629000	2280000	2280000	3257000
6-1/8	36-3/4	22-1/16	4	134-3/4	44	30200	1179000	1684000	1684000	2357000	2357000	3367000
6-3/8	38-1/4	22-15/16	4-1/8	140-1/4	42	32400	1256000	1795000	1795000	2512000	2512000	3589000

[1] Data provided by Baldt, Inc. and Vicinay International Co., Inc. A.B.S. denotes American Bureau of Shipping. For markings and general notes, see Table 10.

[2] U.S. Navy Grade 2 chain that is stocked for use in the standard free-swinging, fleet-type mooring has slightly higher strength requirements.

[3] U.S. Navy Grade FM 3 is comparable to A.B.S. Grade 3 but is more ductile.

Table 12. Chain Oil Rig Quality and Extra Strength Stud Link [1]

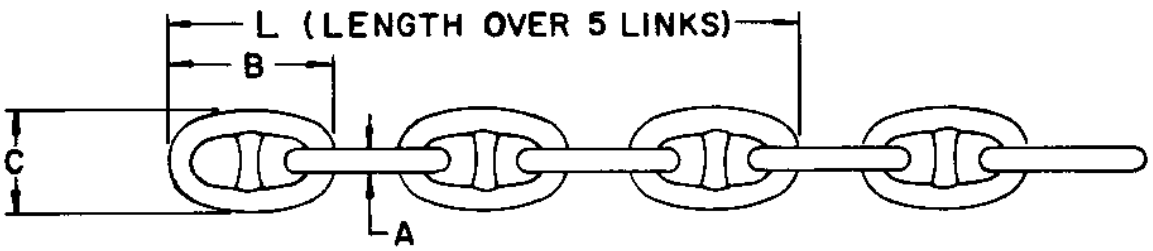

DIMENSIONS IN INCHES				WEIGHT PER 15 FATHOM SHOT (LBS.)	TEST REQUIREMENTS (POUNDS)			
					OIL RIG QUALITY		EXTRA STRENGTH[2]	
CHAIN SIZE A	B	C	L		PROOF TEST	BREAK TEST	PROOF TEST	BREAK TEST
1	6	3-9/16	22	900	84,000	129,000	130,000	180,600
1-1/8	6-3/4	4	24-3/4	1,140	106,000	161,000	164,300	225,400
1-1/4	7-1/2	4-1/2	27-1/2	1,415	130,000	198,000	201,500	277,200
1-3/8	8-1/4	4-15/16	30-1/4	1,705	157,000	235,000	243,300	329,000
1-1/2	9	5-3/8	33	2,035	185,000	280,000	286,700	392,000
1-5/8	9-3/4	5-7/8	35-3/4	2,345	216,000	325,000	334,800	455,000
1-3/4	10-1/2	6-5/16	38-1/2	2,720	249,000	380,000	385,900	532,000
1-7/8	11-1/4	6-3/4	41-1/4	3,125	285,000	432,000	441,700	604,800
2	12	7-3/16	44	3,525	322,000	488,000	499,000	683,000
2-1/16	12-3/8	7-7/16	45-3/8	3,750	342,000	518,000	530,000	725,000
2-1/8	12-3/4	7-5/8	46-3/4	3,975	362,000	548,000	561,000	767,000
2-3/16	13-1/8	7-7/8	48-1/8	4,215	382,500	579,100	592,800	810,700
2-1/4	13-1/2	8-1/8	49-1/2	4,460	403,000	610,000	624,600	854,000
2-5/16	13-7/8	8-5/16	50-7/8	4,710	425,000	642,500	658,700	899,500
2-3/8	14-1/4	8-9/16	52-1/4	4,960	447,000	675,000	692,000	945,000
2-7/16	14-5/8	8-3/4	53-5/8	5,210	469,500	709,500	727,700	993,000
2-1/2	15	9	55	5,528	492,000	744,000	762,000	1,041,600
2-9/16	15-3/8	9-1/4	56-3/8	5,810	516,000	778,500	799,800	1,090,000
2-5/8	15-3/4	9-7/16	57-3/4	6,105	540,000	813,000	837,000	1,138,000
2-11/16	16-1/8	9-11/16	59-1/8	6,410	565,000	849,000	875,700	1,188,000
2-3/4	16-1/2	9-7/8	60-1/2	6,725	590,000	885,000	914,000	1,239,000
2-13/16	16-7/8	10-1/8	61-7/8	7,040	615,000	925,000	953,000	1,295,000
2-7/8	17-1/4	10-3/8	63-1/4	7,365	640,000	965,000	992,000	1,351,000
2-15/16	17-5/8	10-9/16	64-5/8	7,696	666,500	1,005,000	1,032,000	1,407,000
3	18	10-13/16	66	8,035	693,000	1,045,000	1,067,000	1,452,000
3-1/16	18-3/8	11	67-3/8	8,379	720,500	1,086,500	1,109,000	1,510,000
3-1/8	18-3/4	11-1/4	68-3/4	8,736	748,000	1,128,000	1,152,000	1,567,900
3-3/16	19-1/8	11-1/2	70-1/8	9,093	776,050	1,169,000	1,195,000	1,624,900
3-1/4	19-1/2	11-11/16	71-1/2	9,460	804,100	1,210,000	1,238,000	1,681,900
3-5/16	19-7/8	11-15/16	72-7/8	9,828	833,150	1,253,000	1,283,000	1,741,000
3-3/8	20-1/4	12-1/8	74-1/4	10,210	862,200	1,296,000	1,327,700	1,801,600
3-7/16	20-5/8	12-3/8	75-5/8	10,599	892,100	1,339,550	1,373,800	1,861,900
3-1/2	21	12-5/8	77	10,998	922,000	1,383,100	1,419,800	1,922,000
3-5/8	21-3/4	12-15/16	79-3/4	11,607	1,021,000	1,566,000	1,572,000	2,176,700
3-3/4	22-1/2	13-3/8	82-1/2	12,626	1,120,000	1,750,000	1,724,000	2,432,000
3-7/8	23-1/4	14	85-1/4	13,570	1,205,000	1,863,000	1,855,000	2,589,000
4	24	14-3/8	88	14,400	1,298,000	1,996,500	1,998,900	2,775,000
4-1/8	24-3/4	14-7/8	90-3/4	15,000	1,347,400	2,062,500		
4-1/4	25-1/2	15-5/16	93-1/2	15,900	1,393,700	2,134,000		
4-3/8	26-1/4	15-3/4	96-1/4	16,860	1,569,700	2,398,000		
4-1/2	27	16-3/16	99	17,840	1,672,000	2,508,000		
4-5/8	27-3/4	16-5/8	101-3/4	18,840	1,775,000	2,675,000		
4-3/4	28-1/2	17-1/8	104-1/2	19,840	1,870,000	2,805,000		

[1] Data provided by Baldt, Inc. and Vicinay International Co., Inc. For markings and general notes, see Table 10.

[2] Data provided by Baldt, Inc. only.

Table 13. Chain Standard Di-Lok [1]

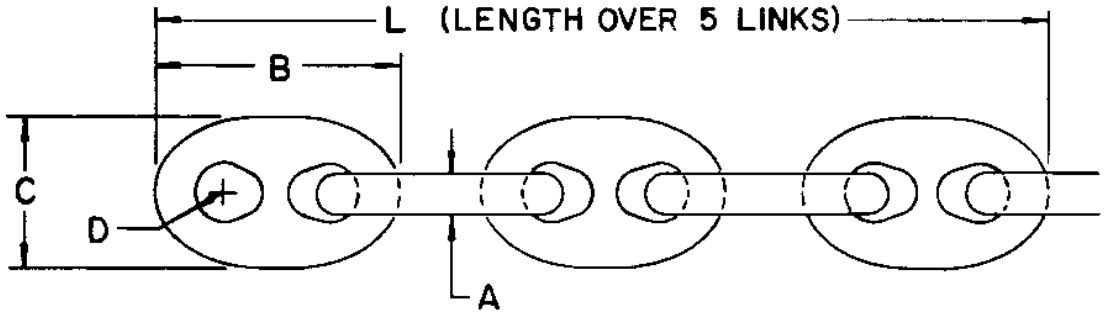

DIMENSIONS IN INCHES					NO. OF LINKS PER 15 FATHOM SHOT	WEIGHT PER 15 FATHOM SHOT (LBS.)	TEST REQUIREMENTS	
CHAIN SIZE A	B	C	D	L			PROOF TEST (LBS.)	BREAK TEST (LBS.)
3/4	4-1/2	2-5/8	1/2	16-1/2	357	505	48,000	75,000
13/16	4-7/8	2-7/8	17/32	17-7/8	329	600	56,000	86,500
7/8	5-1/4	3-1/8	37/64	19-1/4	305	700	64,000	98,000
15/16	5-5/8	3-5/16	5/8	20-5/8	285	795	74,000	113,500
1	6	3-9/16	21/32	22	267	900	84,000	129,000
1-1/16	6-3/8	3-3/4	11/16	23-3/8	251	1,020	95,000	145,000
1-1/8	6-3/4	4	25/32	24-3/4	237	1,140	106,000	161,000
1-3/16	7-1/8	4-1/4	25/32	26-1/8	225	1,275	118,000	179,500
1-1/4	7-1/2	4-1/2	25/32	27-1/2	213	1,415	130,000	198,000
1-5/16	7-7/8	4-3/4	7/8	28-7/8	203	1,560	143,500	216,500
1-3/8	8-1/4	4-15/16	7/8	30-1/4	195	1,705	157,000	235,000
1-7/16	8-5/8	5-3/16	15/16	31-5/8	187	1,865	171,000	257,500
1-1/2	9	5-3/8	1	33	179	2,035	185,000	280,000
1-9/16	9-3/8	5-5/8	1-1/32	34-3/8	171	2,195	200,500	302,500
1-5/8	9-3/4	5-7/8	1-1/16	35-3/4	165	2,345	216,000	325,000
1-11/16	10-1/8	6-1/16	1-3/32	37-1/8	159	2,530	232,500	352,500
1-3/4	10-1/2	6-5/16	1-5/32	38-1/2	153	2,720	249,000	380,000
1-13/16	10-7/8	6-1/2	1-3/16	39-7/8	147	2,925	267,000	406,000
1-7/8	11-1/4	6-3/4	1-1/4	41-1/4	143	3,125	285,000	432,000
1-15/16	11-5/8	7	1-9/32	42-5/8	139	3,335	303,500	460,000
2	12	7-3/16	1-5/16	44	133	3,525	322,000	488,000
2-1/16	12-3/8	7-7/16	1-3/8	45-3/8	129	3,750	342,000	518,000
2-1/8	12-3/4	7-5/8	1-7/16	46-3/4	125	3,975	362,000	548,000
2-3/16	13-1/8	7-7/8	1-15/32	48-1/8	123	4,215	382,500	579,100
2-1/4	13-1/2	8-1/8	1-1/2	49-1/2	119	4,460	403,000	610,000
2-5/16	13-7/8	8-5/16	1-17/32	50-7/8	117	4,710	425,000	642,500
2-3/8	14-1/4	8-9/16	1-9/16	52-1/4	113	4,960	447,000	675,000
2-7/16	14-5/8	8-3/4	1-5/8	53-5/8	111	5,210	469,500	709,500
2-1/2	15	9	1-5/8	55	107	5,528	492,000	744,000
2-9/16	15-3/8	9-1/4	1-11/16	56-3/8	105	5,810	516,000	778,500
2-5/8	15-3/4	9-7/16	1-11/16	57-3/4	103	6,105	540,000	813,000
2-11/16	16-1/8	9-11/16	1-3/4	59-1/8	99	6,410	565,000	849,000
2-3/4	16-1/2	9-7/8	1-13/16	60-1/2	97	6,725	590,000	885,000
2-13/16	16-7/8	10-1/8	1-27/32	61-7/8	95	7,040	615,000	925,000
2-7/8	17-1/4	10-3/8	1-7/8	63-1/4	93	7,365	640,000	965,000
2-15/16	17-5/8	10-9/16	1-7/8	64-5/8	91	7,696	666,500	1,005,000
3	18	10-13/16	2	66	89	8,035	693,000	1,045,000
3-1/16	18-3/8	11	2	67-3/8	87	8,379	720,500	1,086,500
3-1/8	18-3/4	11-1/4	2-1/16	68-3/4	85	8,736	748,000	1,128,000
3-3/16	19-1/8	11-1/2	2-1/16	70-1/8	85	9,093	776,050	1,169,000
3-1/4	19-1/2	11-11/16	2-1/8	71-1/2	83	9,460	804,100	1,210,000
3-5/16	19-7/8	11-15/16	2-1/8	72-7/8	81	9,828	833,150	1,253,000
3-3/8	20-1/4	12-1/8	2-3/16	74-1/4	79	10,210	862,200	1,296,000
3-7/16	20-5/8	12-3/8	2-3/16	75-5/8	77	10,599	892,100	1,339,550
3-1/2	21	12-5/8	2-5/16	77	77	10,998	922,000	1,383,100
3-5/8	21-3/4	12-15/16	2-5/16	79-3/4	73	11,607	1,021,000	1,566,000
3-3/4	22-1/2	13-3/8	2-15/32	82-1/2	71	12,626	1,120,000	1,750,000

[1] Data provided by Baldt, Inc. For markings and general notes, see Table 10.

Table 14. Chain U.S. Navy Di-Lok [1]

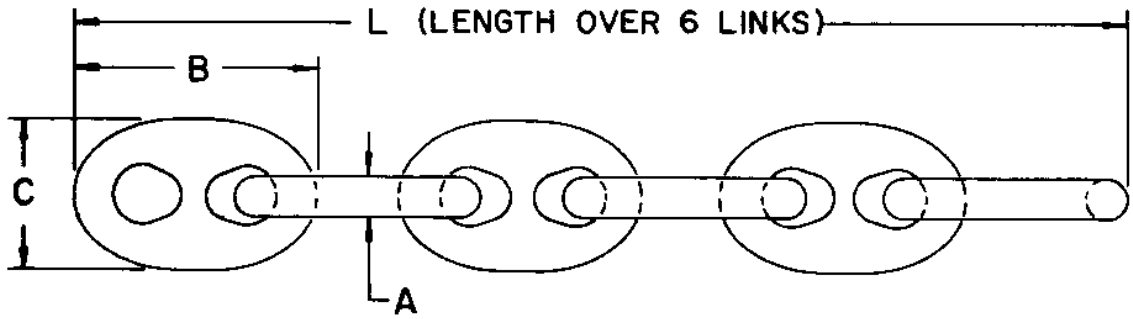

DIMENSIONS IN INCHES				NO. OF LINKS PER 15 FATHOM SHOT	WEIGHT PER 15 FATHOM SHOT (LBS.)	WEIGHT PER LINK APPROX. (LBS.)	TEST REQUIREMENTS	
CHAIN SIZE A	B	C	L				PROOF TEST (LBS.)	BREAK TEST (LBS.)
TYPE 1 STANDARD								
3/4	4-1/2	2-5/8	19-1/2	359	490	1.4	48,000	75,000
7/8	5-1/4	3-1/8	22-3/4	305	680	2.2	64,000	98,000
1	6	3-9/16	26	267	890	3.3	84,000	129,000
1-1/8	6-3/4	4	29-1/4	237	1130	4.8	106,000	161,000
1-1/4	7-1/2	4-1/2	32-1/2	213	1400	6.6	130,000	198,000
1-3/8	8-1/4	4-15/16	35-3/4	193	1690	8.8	157,000	235,000
1-1/2	9	5-3/8	39	177	2010	11.4	185,000	280,000
1-5/8	9-3/4	5-7/8	42-1/4	165	2325	14.1	216,000	325,000
1-3/4	10-1/2	6-5/16	45-1/2	153	2695	17.6	249,000	380,000
1-7/8	11-1/4	6-3/4	48-3/4	143	3095	21.6	285,000	432,000
2	12	7-3/16	52	135	3490	25.9	289,800	439,200
2-1/8	12-3/4	7-5/8	55-1/4	125	3935	31.5	325,800	493,200
2-1/4	13-1/2	8-1/8	58-1/2	119	4415	37.1	362,700	549,000
2-3/8	14-1/4	8-9/16	61-3/4	113	4915	43.5	402,300	607,500
2-1/2	15	9	65	107	5475	51.2	442,800	669,600
2-5/8	15-3/4	9-7/16	68-1/4	101	6050	59.9	486,000	731,700
2-3/4	16-1/2	9-7/8	71-1/2	97	6660	68.7	531,000	796,500
2-7/8	17-1/4	10-3/8	74-3/4	93	7295	78.4	576,000	868,500
3	18	10-13/16	78	89	7955	89.4	623,700	940,500
3-1/8	18-3/4	11-1/4	81-1/4	87	8700	100.0	673,200	1,015,200
3-1/4	19-1/2	11-11/16	84-1/2	83	9410	113.4	723,700	1,089,000
3-3/8	20-1/4	12-1/8	87-3/4	79	10112	128.0	776,000	1,166,400
3-1/2	21	12-5/8	91	77	10900	141.6	829,800	1,244,800
3-3/4	22-1/2	13-3/8	97-1/2	71	12500	176.1	1,008,000	1,575,000
4-3/4	28-1/2	17-1/8	122-1/2	57	20500	359.7	1,700,000	2,550,000
TYPE 2 HEAVY DUTY								
2-3/4	16-1/2	9-7/8	71-1/2	97	7000	72.2	584,100	882,900
3	18	10-13/16	78	89	8100	91.0	685,800	1,035,000
3-1/2	21	12-5/8	91	77	12000	155.8	972,000	1,530,000
TYPE 3 HIGH STRENGTH								
3/4	4-1/2	2-5/8	19-1/2	359	550	1.5	67,500	91,100
1	6	3-9/16	26	267	1000	3.8	116,100	156,700
1-1/8	6-3/4	4	29-1/4	237	1270	5.4	145,000	195,000
1-3/8	8-1/4	4-15/16	35-3/4	193	1900	9.9	211,500	285,500
1-1/2	9	5-3/8	39	177	2260	12.8	252,000	340,200
1-5/8	9-3/4	5-7/8	42-1/4	165	2620	15.9	292,500	395,000

[1] Data provided by Baldt, Inc. For markings and general notes, see Table 10. This chain complies with the requirements of Mil. Spec. C-19944 and is listed here as reference to naval vessel anchor chains (see Table 78). It should not be substituted for Navy Common A-Link or A.B.S. Stud Link Chain in mooring systems.

Table 15. Chain Super Strength Di-Lok [1]

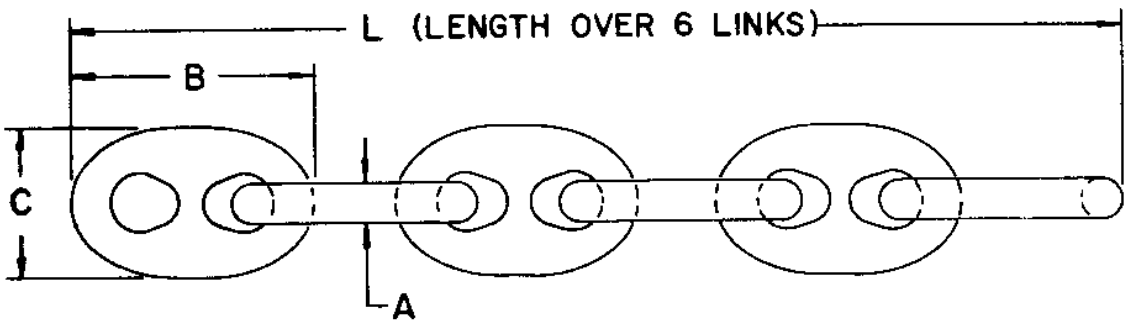

DIMENSIONS IN INCHES				WEIGHT PER 15 FATHOM SHOT (LBS.)	TEST REQUIREMENTS (LBS.)	
CHAIN SIZE A	B	C	L		PROOF TEST	BREAK TEST
3/4	4-1/2	2-5/8	19-1/2	630	48,000	91,500
7/8	5-1/4	3-1/8	22-3/4	860	64,000	119,500
1	6	3-9/16	26	1,125	84,000	157,300
1-1/8	6-3/4	4	29-1/4	1,425	106,000	196,400
1-1/4	7-1/2	4-1/2	32-1/2	1,770	130,000	241,500
1-3/8	8-1/4	4-15/16	35-3/4	2,125	157,000	286,700
1-1/2	9	5-3/8	39	2,505	185,000	341,600
1-5/8	9-3/4	5-7/8	42-1/4	2,925	216,000	396,500
1-3/4	10-1/2	6-5/16	45-1/2	3,400	249,000	463,600
1-7/8	11-1/4	6-3/4	48-3/4	3,900	285,000	527,000
2	12	7-3/16	52	4,400	322,000	595,000
2-1/8	12-3/4	7-5/8	55-1/4	4,960	362,000	668,500
2-1/4	13-1/2	8-1/8	58-1/2	5,560	403,000	744,000
2-3/8	14-1/4	8-9/16	61-3/4	6,200	447,000	823,500
2-1/2	15	9	65	6,900	492,000	907,600
2-5/8	15-3/4	9-7/16	68-1/4	7,650	540,000	991,800
2-3/4	16-1/2	9-7/8	71-1/2	8,400	590,000	1,079,700
2-7/8	17-1/4	10-3/8	74-3/4	9,200	640,000	1,177,300
3	18	10-13/16	78	10,050	693,000	1,274,900
3-1/8	18-3/4	11-1/4	81-1/4	10,900	748,000	1,376,000
3-1/4	19-1/2	11-11/16	84-1/2	11,825	804,100	1,476,200
3-3/8	20-1/4	12-1/8	87-3/4	12,750	862,200	1,581,000
3-1/2	21	12-5/8	91	13,700	922,000	1,687,300
3-5/8	21-3/4	13-1/16	94-1/4	14,500	1,021,000	1,910,500
3-3/4	22-1/2	13-1/2	97-1/2	15,800	1,120,000	2,135,000
3-7/8	23-1/4	14	100-3/4	16,400	1,205,000	2,273,300

[1] Data provided by Baldt, Inc. For markings and general notes see Table 10.

Table 16. Chain U.S. Coast Guard Buoy Type [1]

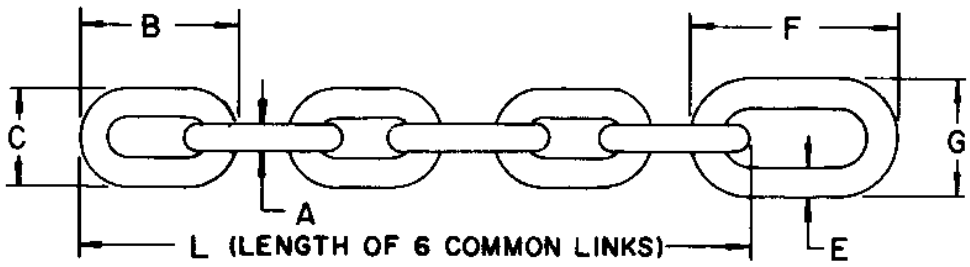

DIMENSIONS IN INCHES									
COMMON LINKS			END LINKS				WT./ 15 FM. (LBS.)	PROOF LOAD (LBS.)	BREAK LOAD (LBS.)
A	B	C	E	F	G	L			
1/2	3	1-7/8	3/4	4-1/2	2-5/8	13	210	7,500	15,000
5/8	3-3/4	2-1/4	3/4	4-1/2	2-5/8	16-1/4	323	11,500	23,000
3/4	4-1/2	2-5/8	7/8	5-1/4	3-1/8	19-1/2	442	16,000	32,000
7/8	5-1/4	3-1/8	1-1/8	6-3/4	3-7/8	22-3/4	608	22,000	44,000
1	6	3-1/2	1-1/4	7-1/2	4-3/8	26	780	29,000	58,000
1-1/8	6-3/4	3-7/8	1-1/4	7-1/2	4-3/8	29-1/4	990	38,500	77,000
1-1/4	7-1/2	4-3/8	1-1/2	9	5-1/4	32-1/2	1,245	45,500	91,000
1-1/2	9	5-1/4	1-7/8	11-1/4	6-1/2	39	1,762	65,500	131,000
1-5/8	9-3/4	5-11/16	1-7/8	11-1/4	6-1/2	42-1/4	2,040	76,500	153,000
1-3/4	10-1/2	6-1/16	2-1/8	12	7-3/16	45-1/2	2,370	86,500	173,000
1-7/8	11-1/4	6-1/2	2-1/8	12	7-3/16	48-3/4	2,640	100,000	200,000

[1] Data provided by Baldt Inc. For markings and general notes see Table 10.

Table 17. Fitting Details Enlarged Links [1]

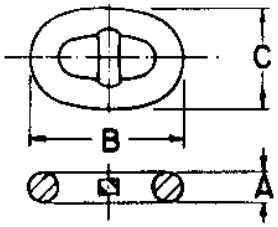

CHAIN SIZE	DIMENSIONS IN INCHES A	B	C	CHAIN SIZE	DIMENSIONS IN INCHES A	B	C
3/4	13/16	4-7/8	3	2-7/8	3-3/16	18-11/16	11-1/2
13/16	7/8	5-1/4	3-1/4	2-15/16	3-1/4	19-1/16	11-3/4
7/8	15/16	5-5/8	3-7/16	3	3-5/16	19-7/16	11-15/16
15/16	1-1/16	6-1/8	3-13/16	3-1/16	3-3/8	19-13/16	12-1/4
1	1-1/8	6-9/16	4	3-1/8	3-7/16	20-3/8	12-9/16
1-1/16	1-3/16	6-15/16	4-1/4	3-3/16	3-1/2	20-3/4	12-3/4
1-1/8	1-1/4	7-5/16	4-1/2	3-1/4	3-9/16	21-3/16	13
1-3/16	1-5/16	7-11/16	4-3/4	3-5/16	3-5/8	21-1/2	13-1/4
1-1/4	1-3/8	8-1/16	4-15/16	3-3/8	3-3/4	22	13-9/16
1-5/16	1-7/16	8-9/16	5-1/4	3-7/16	3-13/16	22-3/8	13-13/16
1-3/8	1-1/2	9	5-1/2	3-1/2	3-7/8	22-13/16	14
1-7/16	1-9/16	9-3/8	5-3/4	3-9/16	3-15/16	23-3/16	14-1/4
1-1/2	1-5/8	9-3/4	6	3-5/8	4	23-9/16	14-1/2
1-9/16	1-11/16	10-1/8	6-1/4	3-11/16	4-1/16	23-15/16	14-11/16
1-5/8	1-13/16	10-5/8	6-9/16	3-3/4	4-1/8	25-5/16	14-15/16
1-11/16	1-7/8	11	6-3/4	3-13/16	4-3/16	24-13/16	15-1/4
1-3/4	1-15/16	11-7/16	7	3-7/8	4-1/4	25-1/4	15-1/2
1-13/16	2	11-3/4	7-1/4	3-15/16	4-5/16	25-9/16	15-3/4
1-7/8	2-1/16	12-3/16	7-1/2	4	4-7/16	26	16
1-15/16	2-1/8	12-9/16	7-11/16	4-1/8	4-9/16	26-7/8	16-9/16
2	2-3/16	13-1/16	8-1/16	4-1/4	4-11/16	27-5/8	17
2-1/16	2-1/4	13-1/2	8-1/4	4-3/8	4-13/16	28-7/16	17-1/2
2-1/8	2-5/16	13-13/16	8-1/2	4-1/2	4-15/16	29-5/16	18-1/16
2-3/16	2-3/8	14-3/16	8-3/4	4-5/8	5-1/8	30-1/16	18-1/2
2-1/4	2-7/16	14-9/16	9	4-3/4	5-3/16	30-13/16	18-15/16
2-5/16	2-9/16	15	9-3/16	4-7/8	5-3/8	31-3/4	19-1/2
2-3/8	2-5/8	15-1/2	9-1/2	5	5-1/2	32-1/2	20
2-7/16	2-11/16	15-7/8	9-3/4	5-1/8	5-5/8	33-1/4	20-1/2
2-1/2	2-3/4	16-1/4	10	5-1/4	5-13/16	34-3/16	21
2-9/16	2-13/16	16-11/16	10-1/4	5-3/8	5-7/8	34-15/16	21-1/2
2-5/8	2-7/8	17-1/16	10-1/2	5-1/2	6-1/16	35-13/16	21-15/16
2-11/16	2-15/16	17-1/2	10-11/16	5-5/8	6-3/16	36-5/8	22-1/2
2-3/4	3	17-13/16	10-15/16	5-3/4	6-5/16	37-3/8	23
2-13/16	3-1/16	18	11-1/4	5-7/8	6-1/2	38-1/4	23-9/16
				6	6-5/8	39	24

[1] Data provided by Vicinay International Co., Inc. These links have the same test requirements as connecting A.B.S. Gr. 1, 2, or 3 chain. For markings and general notes, see Table 10.

Table 18. Fitting Details End Links [1]

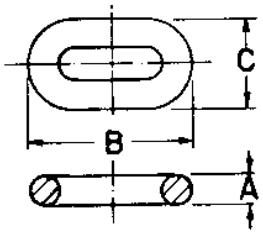

CHAIN SIZE	DIMENSIONS IN INCHES A	B	C	CHAIN SIZE	DIMENSIONS IN INCHES A	B	C
3/4	7/8	5-1/16	3	2-7/8	3-7/16	19-3/8	11-1/2
13/16	15/16	5-1/2	3-1/4	2-15/16	3-1/2	19-13/16	11-3/4
7/8	1-1/16	5-7/8	3-7/16	3	3-9/16	20-3/16	11-15/16
15/16	1-1/8	6-3/8	3-13/16	3-1/16	3-11/16	20-5/8	12-1/4
1	1-3/16	6-13/16	4	3-1/8	3-3/4	21-13/16	12-9/16
1-1/16	1-1/4	7-3/16	4-1/4	3-3/16	3-13/16	21-9/16	12-3/4
1-1/8	1-3/8	7-5/8	4-1/2	3-1/4	3-7/8	22-15/16	13
1-3/16	1-7/16	8	4-3/4	3-5/16	4	22-5/16	13-1/4
1-1/4	1-1/2	8-3/8	4-15/16	3-3/8	4-1/16	22-7/8	13-9/16
1-5/16	1-9/16	8-15/16	5-1/4	3-7/16	4-1/8	23-1/4	13-13/16
1-3/8	1-5/8	9-5/16	5-1/2	3-1/2	4-3/16	23-11/16	14
1-7/16	1-3/4	9-3/4	5-3/4	3-9/16	4-1/4	24-1/16	14-1/4
1-1/2	1-13/16	10-1/8	6	3-5/8	4-3/8	24-7/16	14-1/2
1-9/16	1-7/8	10-1/2	6-1/4	3-11/16	4-7/16	24-7/8	14-11/16
1-5/8	2	11-1/16	6-9/16	3-3/4	4-1/2	25-1/4	14-15/16
1-11/16	2-1/16	11-7/16	6-3/4	3-13/16	4-9/16	25-13/16	15-1/4
1-3/4	2-1/8	11-7/8	7	3-7/8	4-5/8	26-3/16	15-1/2
1-13/16	2-3/16	12-1/4	7-1/4	3-15/16	4-3/4	26-9/16	15-3/4
1-7/8	2-1/4	12-5/8	7-1/2	4	4-13/16	27	16
1-15/16	2-5/16	13-1/16	7-11/16	4-1/8	4-15/16	27-7/8	16-9/16
2	2-3/8	13-9/16	8-1/16	4-1/4	5-1/8	28-11/16	17
2-1/16	2-1/2	13-15/16	8-1/4	4-3/8	5-1/4	29-1/2	17-1/2
2-1/8	2-9/16	14-3/8	8-1/2	4-1/2	5-7/16	30-7/16	18-1/16
2-3/16	2-5/8	14-3/4	8-3/4	4-5/8	5-9/16	31-1/4	18-1/2
2-1/4	2-11/16	15-3/16	9	4-3/4	5-11/16	32	18-15/16
2-5/16	2-3/4	15-9/16	9-3/16	4-7/8	5-7/8	32-15/16	19-1/2
2-3/8	2-7/8	16-1/8	9-1/2	5	6	33-3/4	20
2-7/16	2-15/16	16-1/2	9-3/4	5-1/8	6-1/8	34-5/8	20-1/2
2-1/2	3	16-7/8	10	5-1/4	6-5/16	35-1/16	21
2-9/16	3-1/16	17-1/4	10-1/4	5-3/8	6-7/16	36-5/16	21-1/2
2-5/8	3-1/8	17-11/16	10-1/2	5-1/2	6-5/8	37-3/16	21-15/16
2-11/16	3-3/16	18-1/16	10-11/16	5-5/8	6-3/4	38	22-1/2
2-3/4	3-5/16	18-1/2	10-15/16	5-3/4	6-7/8	38-13/16	23
2-13/16	3-3/8	19	11-1/4	5-7/8	7-1/16	39-11/16	23-9/16
				6	7-3/16	40-9/16	24

[1] Data provided by Vicinay International Co., Inc. These links have the same test requirements as connecting A.B.S. Gr. 1, 2, or 3 chain. For markings and general notes, see Table 10.

Table 19. Fitting Details End Links — U.S. Navy Type [1]

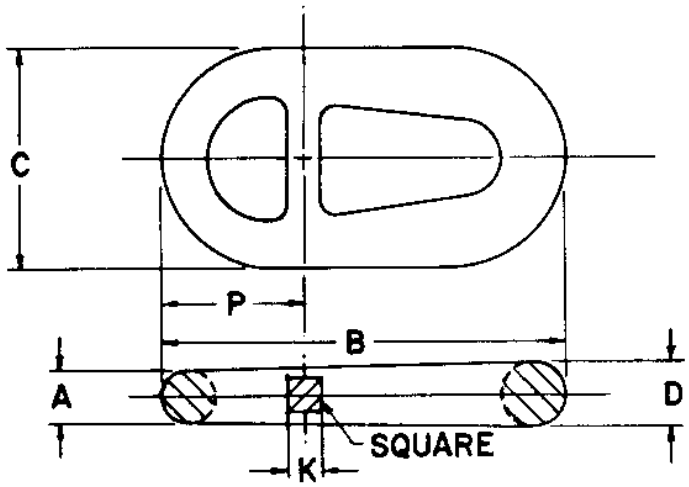

CHAIN SIZE	DIMENSIONS IN INCHES A	B	C	D	K	P	PROOF LOAD (LBS.)	BREAK LOAD (LBS.)	WEIGHT (LBS.)
3/4	13/16	6-1/4	3-1/4	1	1/2	2-1/4	48,000	75,000	2
7/8	15/16	7-1/4	3-5/8	1-1/8	5/8	2-9/16	64,000	98,000	3
1	1-1/16	8-3/16	4	1-1/4	11/16	2-7/8	84,000	129,000	5
1-1/8	1-3/16	9	4-1/2	1-3/8	3/4	3-3/8	106,000	161,000	7
1-1/4	1-5/16	9-7/8	4-3/4	1-1/2	13/16	3-9/16	130,000	198,000	10
1-3/8	1-1/2	11-1/2	6	1-3/4	1	4-1/4	157,000	235,000	13
1-1/2	1-5/8	12	6	1-7/8	1	4-3/8	185,000	280,000	17
1-5/8	1-3/4	13-3/16	6-5/8	2	1-1/8	4-5/8	216,000	325,000	21
1-3/4	1-7/8	14	6-7/8	2-1/8	1-3/16	5	249,000	380,000	27
1-7/8	2	15-5/8	7-3/8	2-1/4	1-1/4	5-1/8	285,000	432,000	32
2-2-1/8	2-1/8	17	8-1/8	2-1/2	1-3/8	6	325,800	493,200	42
2-1/4-2-3/8	2-3/8	18-5/8	9-1/4	2-3/4	1-1/2	6-3/8	402,300	607,500	63
2-1/2-2-5/8	2-5/8	21	10	3	1-5/8	7-1/4	466,000	731,700	85
2-3/4-2-7/8	2-7/8	22-3/8	10-7/8	3-1/4	1-7/8	7-3/4	576,000	868,500	96
3-3HD	3-1/8	24	11-3/4	3-1/2	2	8-3/8	685,800	1,035,000	117
3-1/4-3-3/8	3-1/2	28-1/2	13-1/2	4	2-3/8	9-1/2	776,000	1,166,400	172
3-1/2-3-3/4	4	31-1/8	15	4-1/2	2-5/8	10-13/16	1,008,000	1,575,000	237

[1] Data provided by Baldt, Inc. For markings and general notes, see Table 10.

Table 20. Fitting Details End Links and Rings [1]

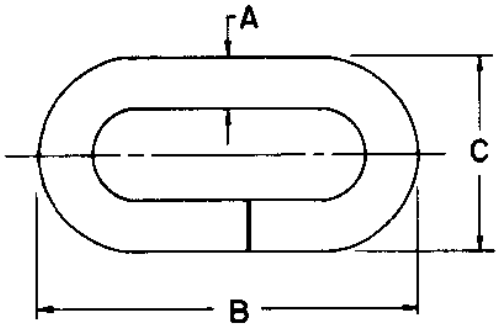

DIMENSIONS IN INCHES					TEST REQUIREMENTS	
CHAIN SIZE	A	B	C	WEIGHT (LBS.)	PROOF TEST (LBS.)	BREAK TEST (LBS.)
11/16 -3/4	13/16	5-5/8	2-7/8	1.8	47,600	68,000
13/16 -1	1-1/16	7-1/2	3-3/4	4.0	83,600	119,500
1-1/16 -1-1/4	1-5/16	9-3/8	4-3/4	8.0	129,000	184,000
1-5/16 -1-1/2	1-5/8	11-1/4	5-3/4	14.2	183,500	262,000
1-9/16 -1-3/4	1-7/8	13	6-5/8	21.6	247,000	352,000
1-13/16-2	2-1/8	15	7-5/8	34.2	318,000	454,000
2-1/16 -2-1/4	2-3/8	16-7/8	8-1/2	45.4	396,000	570,000
2-5/16 -2-1/2	2-5/8	18-3/4	9-1/2	62.0	484,000	692,000
2-9/16 -2-3/4	2-7/8	20-1/2	10-1/2	81.0	578,000	826,000
2-13/16-3	3-1/8	22-1/2	11-3/8	105.0	679,000	970,000
3-1/16 -3-3/8	3-1/2	25-1/4	12-3/4	148.0	843,000	1,204,000
3-7/16 -3-3/4	3-7/8	28	14-1/4	202.0	1,019,000	1,455,000
3-13/16-4	4-1/4	30	15-1/4	258.0	1,143,000	1,632,000

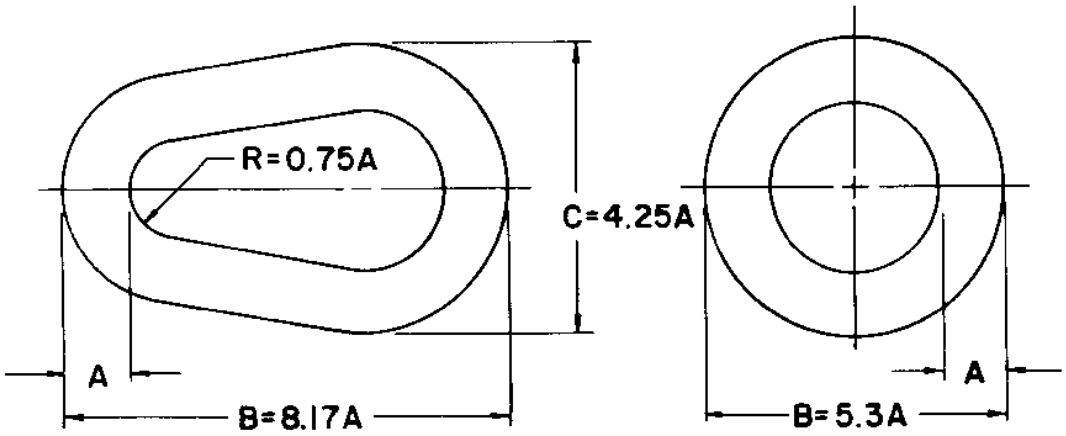

[1]Data provided by Baldt, Inc. For markings and general notes, see Table 10.

Table 21. Fitting Details End Links and Rings [1]

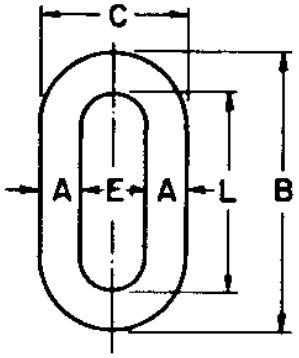

WELDLESS END LINK

STOCK DIA. A	B	C	E	L	WEIGHT (LBS.)	BREAK TEST (LBS.)
	DIMENSIONS IN INCHES					
1/2	3.38	1.75	0.75	2.38	0.48	32,500
5/8	4.50	2.13	1.00	3.25	0.92	46,500
3/4	5.00	2.63	1.13	3.50	1.37	60,000
7/8	6.88	3.75	2.00	5.13	2.75	70,000
1	7.75	4.25	2.25	5.75	3.6	76,000
1-1/4	9.50	5.00	2.50	7.00	7	132,000
1-3/8	10.50	5.50	2.75	7.75	10	150,000

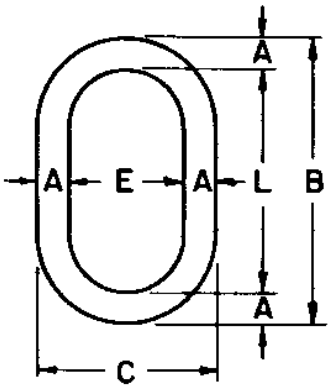

WELDLESS ALLOY MASTER LINK

STOCK DIA. A	B	C	E	L	WEIGHT (LBS.)	BREAK TEST (LBS.)
	DIMENSIONS IN INCHES					
1/2	6.00	3.25	2.50	5.00	0.81	19,500
5/8	7.25	4.25	3.00	6.00	1.5	26,400
3/4	7.00	4.25	2.75	5.50	2.0	42,000
1	9.00	5.50	3.50	7.00	4.6	99,000
1-1/4	11.25	6.88	4.38	8.75	9.2	150,000
1-1/2	13.50	8.25	5.25	10.50	15.7	213,000
1-3/4	15.50	9.50	6.00	12.00	24.5	267,000
2	18.00	11.00	7.00	14.00	38.1	345,000
2-1/4	20.50	12.50	8.00	16.00	54.8	402,000
2-3/4	21.50	15.00	9.50	16.00	87.7	600,000

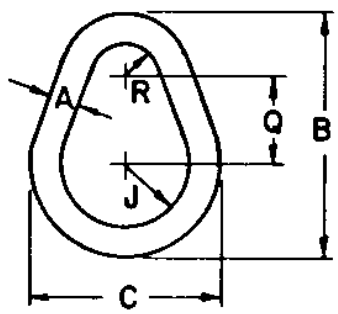

WELDLESS PEAR SHAPED LINK

STOCK DIA. A	B	C	J	Q	R	WEIGHT (LBS.)	BREAK TEST (LBS.)
	DIMENSIONS IN INCHES						
1/2	4.00	3.00	1.00	1.50	0.50	0.53	17,400
5/8	5.00	3.75	1.25	1.875	0.63	1.1	25,200
3/4	6.00	4.50	1.50	2.25	0.75	1.9	36,000
7/8	7.00	5.25	1.75	2.63	0.88	2.9	49,800
1	8.00	6.00	2.00	3.00	1.00	4.3	64,800
1-1/4	10.25	7.50	2.50	4.00	1.25	8.5	100,500
1-3/8	11.00	8.25	2.75	4.13	1.38	11.3	123,000

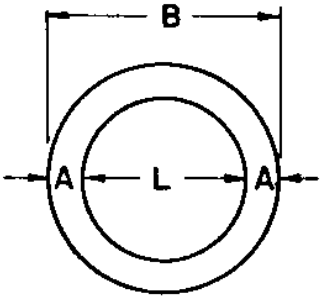

WELDLESS RING

STOCK. DIA. A	B	L	WEIGHT (LBS.)	BREAK TEST (LBS.)
	DIMENSIONS IN INCHES			
3/4	5.75	4.00	2.75	43,200
7/8	7.25	5.50	3.5	33,600
1	6.00	4.00	3.68	64,800
1-1/8	8.25	6.00	6.5	62,400
1-1/4	7.50	5.00	7	102,000
1-3/8	8.75	6.00	10	114,000

[1] Data provided by The Crosby Group. For markings and general notes, see Table 10.

Table 22. Fitting Details Detachable Chain Connecting Links [1]

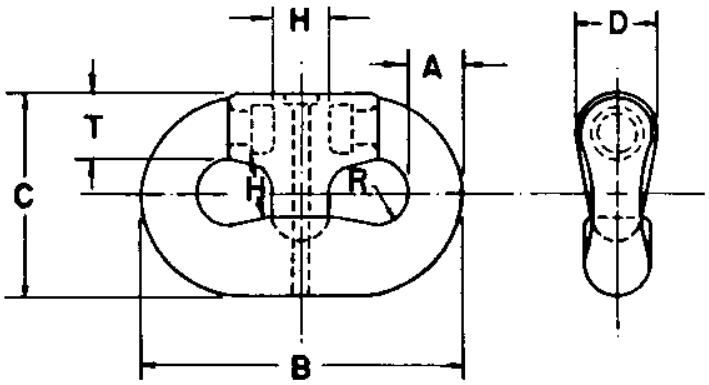

STANDARD TYPE

CHAIN SIZE	A	B	C	D	H	R	T	WEIGHT (LBS.)	TEST REQUIREMENTS PROOF TEST (LBS.)	TEST REQUIREMENTS BREAK TEST (LBS.)
	DIMENSIONS IN INCHES									
+3/4	3/4	4-1/2	2-29/32	15/16	7/8	1/2	15/16	2	48,000	75,000
+13/16 -7/8	7/8	5-1/4	3-3/8	1-3/32	1-1/8	19/32	1-3/32	3.5	64,000	98,000
+15/16 -1	1	6	3-7/8	1-1/4	1-5/32	21/32	1-1/4	4.5	84,000	129,000
+1-1/16 -1-1/8	1-1/8	6-3/4	4-3/8	1-13/32	1-1/4	3/4	1-13/32	6	106,000	161,000
+1-3/16 -1-1/4	1-1/4	7-1/2	4-27/32	1-9/16	1-15/32	27/32	1-9/16	8.5	130,000	198,000
+1-5/16 +1-3/8	1-3/8	8-1/4	5-5/16	1-23/32	1-5/8	29/32	1-23/32	11	157,000	235,000
+1-7/16 -1-1/2	1-1/2	9	5-13/16	1-7/8	1-3/4	1	1-7/8	15	185,000	280,000
+1-9/16 -1-5/8	1-5/8	9-3/4	6-5/16	2	1-31/32	1-1/16	2	20	216,000	325,000
+1-11/16-1-3/4	1-3/4	10-1/2	6-25/32	2-1/4	2-1/16	1-5/32	2-3/16	24	249,000	390,000
1-13/16-1-7/8	1-7/8	11-1/4	7-1/4	2-1/2	2-5/32	1-15/64	2-11/32	32	285,000	432,000
1-15/16-2	2	12	7-3/4	2-1/2	2-5/16	1-5/16	2-1/2	36	322,000	488,000
2-1/16 -2-1/8	2-1/8	12-3/4	8-1/4	2-21/32	2-1/2	1-13/32	2-21/32	44	362,000	548,000
2-3/16 -2-1/4	2-1/4	13-1/2	8-23/32	2-13/16	2-5/8	1-1/2	2-13/16	52	403,000	610,000
2-5/16 -2-3/8	2-3/8	14-1/4	9-7/32	3-1/16	2-3/4	1-9/16	2-15/16	61	447,000	675,000
2-7/16 -2-1/2	2-1/2	15	9-11/16	3-1/8	2-7/8	1-21/32	3-1/8	71	492,000	744,000
2-9/16 -2-5/8	2-5/8	15-3/4	10-3/16	3-1/4	3-1/16	1-3/4	3-1/16	82	540,000	813,000
#2-11/16-2-3/4	2-3/4	16-1/2	10-5/8	3-7/16	3-3/16	1-13/16	3-7/16	95	590,000	885,000
2-13/16-2-7/8	2-7/8	17-1/4	11-1/8	3-19/32	3-11/32	1-29/32	3-3/8	107	640,000	965,000
#2-15/16-3	3	18	11-5/8	3-3/4	3-17/32	1-31/32	3-3/4	120	693,000	1,045,000
3-1/16 -3-1/8	3-1/8	18-3/4	12-1/8	4	3-5/8	2-3/64	3-11/16	138	748,000	1,128,000
3-3/16 -3-1/4	3-1/4	19-1/2	12-5/8	4-1/16	3-5/8	2-5/32	4-1/16	161	804,100	1,210,000
3-5/16 -3-3/8	3-3/8	20-1/4	13-3/32	4-7/32	3-15/16	2-1/4	4-7/32	177	862,200	1,296,000
#3-7/16 -3-1/2	3-1/2	21	13-9/16	4-3/8	4-1/16	2-19/64	4-3/8	195	922,000	1,383,100
3-9/16 -3-5/8	3-5/8	21-3/4	14	4-9/16	4-3/16	2-5/16	4-9/16	215	1,021,000	1,566,000
3-11/16-3-3/4	3-3/4	22-1/2	14-1/2	4-11/16	4-11/16	2-7/16	4-11/16	256	1,120,000	1,750,000
3-13/16-3-7/8	3-7/8	23-1/4	15	5	4-1/2	2-5/8	4-3/4	271	1,205,000	1,863,400
3-15/16-4	4	24	15-1/2	5-3/16	4-5/8	2-11/16	4-15/16	288	1,298,000	1,966,000
4-1/8	4-1/8	24-3/4	16-1/2	5-7/8	5	2-25/32	5-3/16	384	1,347,400	2,062,500
4-1/4	4-3/8	25-1/2	17-3/8	6-1/2	5-1/4	2-7/8	5-1/2	422	1,393,700	2,134,000
4-3/8	4-1/2	26-1/4	18-3/8	7-1/4	5-5/8	2-15/16	5-7/8	460	1,569,700	2,398,000
4-1/2	4-5/8	27	19-3/8	8	6	3	6-3/16	500	1,672,000	2,508,000

+SIZE SUPPLIED AS HIGH STRENGTH DESIGN ONLY
#SIZE SUPPLIED AS HEAVY DUTY DESIGN ONLY

[1] Data provided by Baldt, Inc. For markings and general notes, see Table 10. Similar links that are stocked for use in the standard free-swinging, fleet-type moorings have different dimensions and strengths.

Table 22. Fitting Details Detachable Chain Connecting Links [1] (Continued)

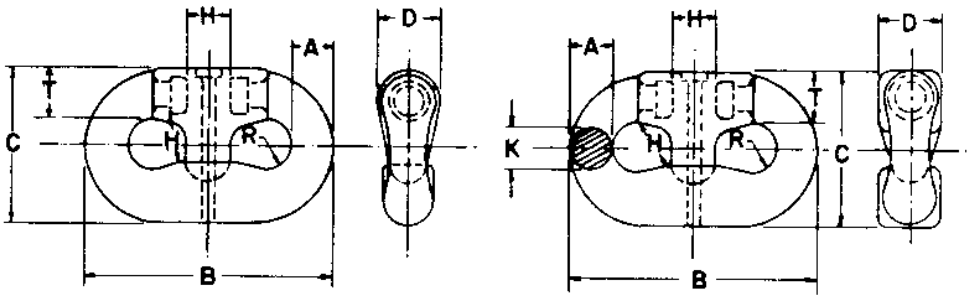

HEAVY DUTY AND HIGH STRENGTH TYPE

OIL RIG QUALITY TYPE

CHAIN SIZE	DIMENSIONS IN INCHES A	B	C	D	H	K	R	T	WEIGHT (LBS.)	TEST REQUIREMENTS PROOF TEST (LBS.)	BREAK TEST (LBS.)
HEAVY DUTY TYPE											
2-3/4	2-7/8	16-1/2	10-13/16	3-11/16	3-1/4		1-13/16	3-11/16	100	645,000	981,000
3	3-3/16	18	11-7/8	4-3/32	3-3/8		1-29/32	4-3/32	125	762,000	1,150,000
3-1/2	3-3/4	21-1/8	13-25/32	4-13/16	4-1/8		2-13/32	4-13/16	205	1,080,000	1,700,000
HIGH STRENGTH TYPE											
3/4	3/4	4-1/2	3	1-3/64	27/32		1/2	59/64	2.1	67,500	91,100
7/8	7/8	5-1/4	3-1/2	1-7/32	63/64		19/32	1-1/16	3.4	88,200	119,000
1	1	5	4	1-25/64	1-1/8		21/32	1-7/32	5.1	116,100	156,700
1-1/8	1-1/8	6-3/4	4-1/2	1-9/16	1-17/64		47/64	1-3/8	7.2	145,000	195,000
1-1/4	1-1/4	7-1/2	5	1-47/64	1-33/32		13/16	1-17/32	9.9	178,200	240,600
1-3/8	1-3/8	8-1/4	5-1/2	1-29/32	1-35/64		29/32	1-43/64	13.3	211,500	285,500
1-1/2	1-1/2	9	6	2-5/64	1-11/16		63/64	1-53/64	17.3	252,000	340,200
1-5/8	1-5/8	9-3/4	6-1/2	2-1/4	1-53/64		1-1/16	1-63/64	22.0	292,500	395,000
1-3/4	1-3/4	10-1/2	7-1/2	2-7/16	2		1-3/16	2-7/32	27.5	352,000	476,000
OIL RIG QUALITY TYPE											
2-3/4	3	16-11/16	11-5/8	4-1/8	3-3/32	2-7/8	1-27/32	3-13/16	100	693,000	1,079,000
3	3-1/4	18-1/2	12-5/8	4-1/2	3-3/8	3-1/8	1-31/32	4-5/32	170	818,800	1,274,000

[1] Data provided by Baldt, Inc. For markings and general notes, see Table 10. Similar links that are stocked for use in the standard free-swinging, fleet-type moorings have different dimensions and strengths.

Table 23. Fitting Details Detachable Chain Connecting Links — "Kenter" Type [1]

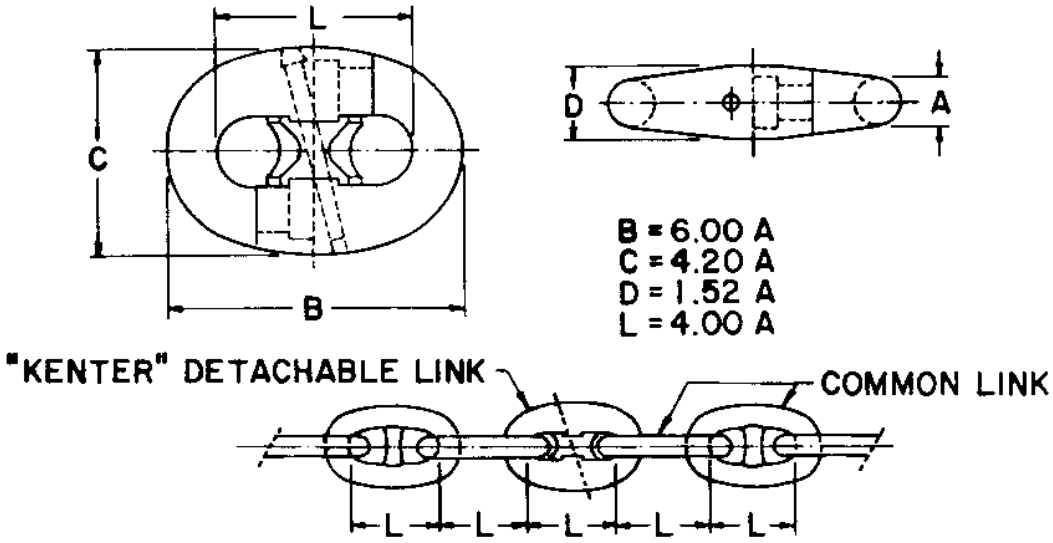

DIMENSIONS IN INCHES						
CHAIN SIZE	A	B	C	D	L	WEIGHT (LBS.)
3/4	3/4	4-1/2	3-1/8	1-1/8	3	2.3
13/16	13/16	4-13/16	3-3/8	1-1/4	3-1/4	2.9
7/8	7/8	5-3/16	3-5/8	1-5/16	3-1/2	3.5
15/16	15/16	5-11/16	4	1-7/16	3-3/4	4.6
1	1	6	4-3/16	1-9/16	4	5.7
1-1/16	1-1/16	6-3/8	4-7/16	1-5/8	4-1/4	6.6
1-1/8	1-1/8	6-3/4	4-11/16	1-11/16	4-1/2	7.7
1-3/16	1-3/16	7-1/16	4-15/16	1-13/16	4-3/4	9.3
1-1/4	1-1/4	7-7/16	5-3/16	1-7/8	5	10.6
1-5/16	1-5/16	7-15/16	5-9/16	2	5-1/4	12.8
1-3/8	1-3/8	8-1/4	5-13/16	2-1/8	5-1/2	14.3
1-7/16	1-7/16	8-5/8	6-1/16	2-3/16	5-3/4	16.5
1-1/2	1-1/2	9	6-1/4	2-5/16	6	18.5
1-9/16	1-9/16	9-5/16	6-9/16	2-3/8	6-1/4	20.9
1-5/8	1-5/8	9-13/16	6-7/8	2-1/2	6-1/2	24.2
1-11/16	1-11/16	10-1/8	7-1/8	2-9/16	6-3/4	27.1
1-3/4	1-3/4	10-1/2	7-3/8	2-11/16	7	29.8
1-13/16	1-13/16	10-7/8	7-5/8	2-3/4	7-1/4	33.1
1-7/8	1-7/8	11-1/4	7-7/8	2-7/8	7-1/2	36.4
1-15/16	1-15/16	11-9/16	8-1/8	2-15/16	7-3/4	39.7
2	2	12-1/16	8-7/16	3-1/16	8	45.2
2-1/16	2-1/16	12-3/8	8-11/16	3-1/8	8-1/4	49.1
2-1/8	2-1/8	12-3/4	8-15/16	3-1/4	8-1/2	53.3
2-3/16	2-3/16	13-1/8	9-3/16	3-5/16	8-3/4	58.0
2-1/4	2-1/4	13-7/16	9-7/16	3-7/16	9	62.8
2-5/16	2-5/16	13-15/16	9-11/16	3-1/2	9-1/4	67.9
2-3/8	2-3/8	14-5/16	10	3-5/8	9-1/2	74.9
2-7/16	2-7/16	14-5/8	10-1/4	3-3/4	9-3/4	80.9
2-1/2	2-1/2	15	10-1/2	3-13/16	10	86.8
2-9/16	2-9/16	15-3/8	10-3/4	3-7/8	10-1/4	93.2
2-5/8	2-5/8	15-11/16	11	4	10-1/2	99.8
2-11/16	2-11/16	16-1/16	11-1/4	4-1/16	10-3/4	106.5
2-3/4	2-3/4	16-7/16	11-1/2	4-3/16	11	113.7
2-13/16	2-13/16	16-7/8	11-13/16	4-5/16	11-1/4	123.9
2-7/8	2-7/8	17-1/4	12-1/16	4-3/8	11-1/2	131.8

[1] Data provided by Baldt, Inc. and Vicinay International Co., Inc. Proof test is same as connecting chain. Breaking strengths are equivalent to A.B.S. Gr. 1, 2, or 3 chain. For markings and general notes, see Table 10.

26.6-97

Table 23. Fitting Details Detachable Chain Connecting Links — "Kenter" Type [1] (Continued)

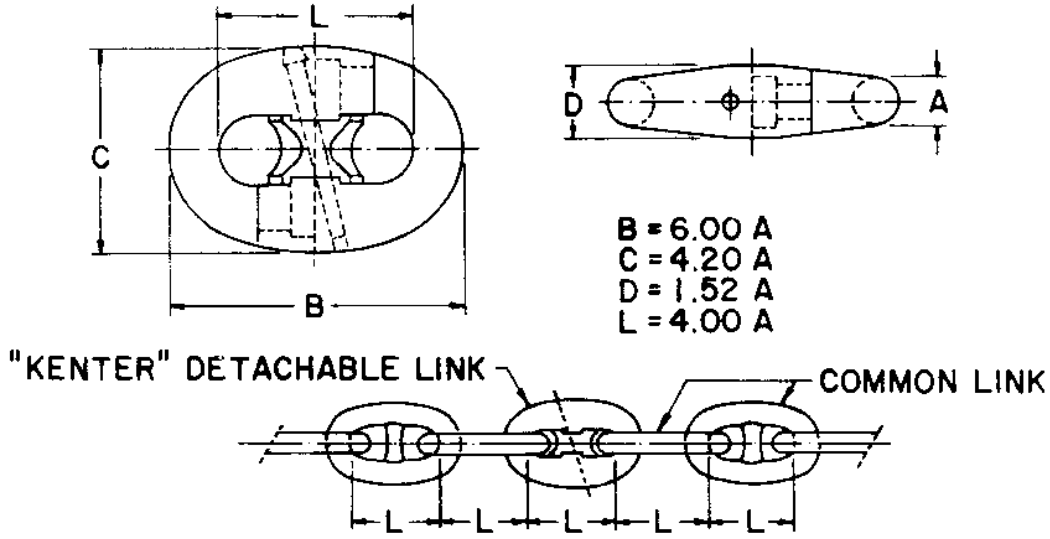

CHAIN SIZE	A	B	C	D	L	WEIGHT (LBS.)
	DIMENSIONS IN INCHES					
2-15/16	2-15/16	17-5/8	12-5/16	4-7/16	11-3/4	140
3	3	17-15/16	12-9/16	4-9/16	12	149
3-1/16	3-1/16	18-5/16	12-13/16	4-5/8	12-1/4	158
3-1/8	3-1/8	18-3/4	13-1/8	4-3/4	12-1/2	170
3-3/16	3-3/16	19-1/8	13-3/8	4-7/8	12-3/4	180
3-1/4	3-1/4	19-1/2	13-5/8	4-15/16	13	190
3-5/16	3-5/16	19-13/16	13-7/8	5-1/16	13-1/4	201
3-3/8	3-3/8	20-5/16	14-3/16	5-3/16	13-1/2	215
3-7/16	3-7/16	20-11/16	14-7/16	5-1/4	13-3/4	227
3-1/2	3-1/2	21	14-3/4	5-5/16	14	238
3-9/16	3-9/16	21-3/8	14-15/16	5-7/16	14-1/4	251
3-5/8	3-5/8	21-3/4	15-3/16	5-1/2	14-1/2	267
3-11/16	3-11/16	22-1/16	15-7/16	5-5/8	14-3/4	276
3-3/4	3-3/4	22-7/16	15-11/16	5-11/16	15	289
3-13/16	3-13/16	22-15/16	16-1/16	5-13/16	15-1/4	309
3-7/8	3-7/8	23-1/4	16-1/4	5-7/8	15-1/2	324
3-15/16	3-15/16	23-5/8	16-9/16	6	15-3/4	339
4	4	24	16-13/16	6-1/16	16	355
4-1/8	4-1/8	24-13/16	17-3/8	6-5/16	16-1/2	395
4-1/4	4-1/4	25-1/2	17-7/8	6-7/16	17	428
4-3/8	4-3/8	26-1/4	18-3/8	6-5/8	17-1/2	465
4-1/2	4-1/2	27-1/16	18-15/16	6-7/8	18	509
4-5/8	4-5/8	27-3/4	19-7/16	7-1/16	18-1/2	551
4-3/4	4-3/4	28-7/16	19-15/16	7-3/16	19	595
4-7/8	4-7/8	29-5/16	20-1/2	7-7/16	19-1/2	648
5	5	30	21	7-5/8	20	696
5-1/8	5-1/8	30-11/16	21-1/2	7-13/16	20-1/2	747
5-1/4	5-1/4	31-9/16	22-1/16	8	21	809
5-3/8	5-3/8	32-1/4	22-9/16	8-3/16	21-1/2	864
5-1/2	5-1/2	33-1/16	23-1/8	8-3/8	22	932
5-5/8	5-5/8	33-3/4	23-5/8	8-9/16	22-1/2	994
5-3/4	5-3/4	34-1/2	24-1/8	8-3/4	23	1058
5-7/8	5-7/8	35-5/16	24-5/8	8-15/16	23-1/2	1135
6	6	36	25-3/16	9-1/8	24	1203

[1] Data provided by Baldt, Inc. and Vicinay International Co., Inc. Proof test is same as connecting chain. Breaking strengths are equivalent to A.B.S. Gr. 1, 2, or 3 chain. For markings and general notes, see Table 10.

Table 24. Fitting Details Detachable Chain Connecting Links [1]

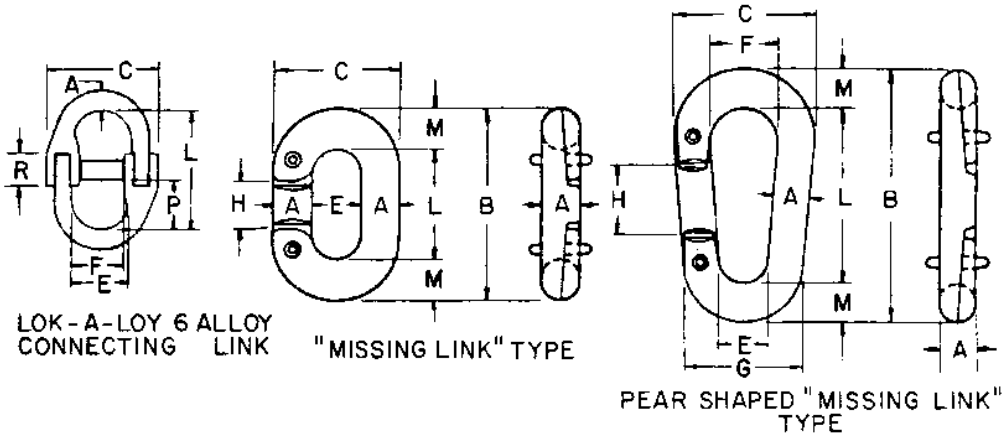

LOK-A-LOY 6 ALLOY CONNECTING LINK

CHAIN SIZE	DIMENSIONS IN INCHES A	C	E	F	L	P	R	WEIGHT (LBS.)	BREAK TEST (LBS.)
1/2	.58	3.13	1.56	1.40	3.33	1.42	.87	1.10	45,000
5/8	.78	3.94	1.86	1.67	3.92	1.67	1.05	2.20	66,000
3/4	.89	4.44	2.19	1.87	4.84	2.09	1.18	4.00	92,000
7/8	1.00	5.28	2.50	2.12	5.82	2.54	1.38	5.75	115,000
1	1.08	6.07	2.93	2.55	6.48	2.84	1.47	7.53	155,000
1-1/4	1.38	7.65	3.99	3.52	8.49	3.77	1.73	15.00	230,000

"MISSING LINK" TYPE

CHAIN SIZE	DIMENSIONS IN INCHES A	B	C	E	H	L	M	WEIGHT (LBS.)	BREAK TEST (LBS.)
1/2	.53	2.66	1.72	.66	.66	1.47	.59	0.4	19,000
5/8	.66	3.31	2.09	.76	.81	1.81	.75	0.7	29,000
3/4	.78	3.88	2.50	.94	1.06	2.13	.88	1.2	41,000
7/8	.91	4.50	2.94	1.13	1.13	2.50	1.00	1.8	48,000
1	1.03	5.00	3.31	1.25	1.25	2.75	1.13	2.5	62,000
1-1/8	1.16	5.63	3.69	1.38	1.50	3.13	1.25	3.5	78,000
1-1/4	1.28	6.13	4.19	1.63	1.63	3.25	1.44	4.9	96,000

PEAR SHAPED "MISSING LINK" TYPE

CHAIN SIZE	DIMENSIONS IN INCHES A	B	C	E	F	G	H	L	M	WEIGHT (LBS.)	BREAK TEST (LBS.)
1/2	.50	3.63	2.00	.69	1.00	1.69	1.00	2.50	.56	0.5	13,200
5/8	.63	4.00	2.38	.81	1.13	2.06	1.06	2.75	.63	0.8	20,000
3/4	.75	4.75	2.75	1.00	1.25	2.50	1.13	3.13	.81	1.3	28,400
7/8	.88	5.56	3.25	1.25	1.50	3.00	1.38	3.69	.94	2.1	38,400
1	1.03	6.13	3.56	1.25	1.50	3.31	1.50	3.88	1.13	3.2	49,600
1-1/8	1.16	6.75	3.94	1.38	1.63	3.69	1.63	4.25	1.25	4.4	62,400

[1] Data provided by The Crosby Group. For markings and general notes, see Table 10.

Table 25. Fitting Details Detachable Chain and Anchor Connecting Links [1]

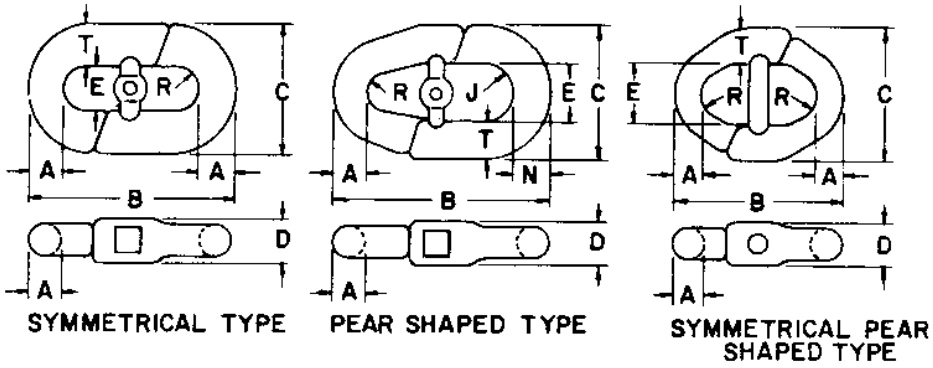

CHAIN SIZE	A	B	C	D	E	J	N	R	T	WEIGHT (LBS.)	MANF. PART NO.
					DIMENSIONS IN INCHES						
SYMMETRICAL TYPE											
5/16	3/8	2-17/32	1-5/8	47/64	9/16			9/32	17/32	1/3	C-0
3/8	13/32	2-13/16	1-7/8	3/4	3/4			3/8	9/16	1/2	C-1
3/8	3/8	2-1/8	1-9/16	3/4	9/16			9/32	1/2	1/3	1
3/8	7/16	3-1/8	2-1/16	3/4	15/16			15/32	9/16	1/2	X-2-U
1/2	1/2	3-1/4	2-1/2	1-1/64	1			1/2	3/4	1	C-3
5/8	13/16	5-3/8	3-5/16	17/32	1-9/16			25/32	7/8	1-7/8	X-4-U
5/8	11/16	4-1/4	3-5/16	17/64	1-9/16			9/16	7/8	1-1/2	C-5
1-1-1/8	1-1/8	6-1/2	4-5/16	1-19/32	2-1/16			1-1/32	1-1/8	5-1/2	X-6-U
1-1/4	1-11/32	8-1/8	5	1-13/16	2-5/16			1-5/32	1-11/32	8	X-8-U
1-1/2	1-1/2	9-1/4	5-7/8	2-1/2	2-1/2			1-1/4	1-11/16	14	9
1-3/4	1-3/4	10-1/4	6-3/4	2-29/32	2-3/4			1-3/8	2	21	11
2	2	12	7-3/4	3-1/32	2-3/4			1-3/8	2-1/2	40	13
3	3	17	10-1/4	4-7/16	3-5/8			1-13/16	3-5/16	100	15
PEAR SHAPED TYPE											
3/8	13/32	2-15/16	2-1/16	3/4	15/16	15/32	7/16	3/8	9/16	1/2	2
1/2-5/8	11/16	4-13/16	3-5/16	1-7/32	1-9/16	25/32	13/16	9/16	7/8	1-3/4	4
3/4-7/8	7/8	6	4-5/16	1-19/32	2-1/16	1-1/32	1-1/8	9/16	1-1/8	4-1/2	6
1-1-1/8	1-1/8	7-5/16	5	1-13/16	2-5/16	1-5/32	1-11/32	3/4	1-11/32	8	8
SYMMETRICAL PEAR SHAPED TYPE											
3/8	13/32	2-3/4	1-15/16	3/4	15/16			3/8	1/2	1/2	Y-2-L
5/8	11/16	4-1/4	3-5/16	1-7/32	1-9/16			9/16	7/8	1-1/2	Y-4-L
7/8	7/8	5-1/2	4-5/16	1-19/32	2-1/16			9/16	1-1/8	3-1/2	Y-6-L
1	1-1/8	6-1/2	5	1-13/16	2-5/16			3/4	1-11/32	6	Y-8-L

[1] Data provided by Interstate Drop Forge Co. Breaking strength is at least as large as that of connecting chain. The pear shaped types are anchor connecting links. For markings and general notes, see Table 10. Similar links that are stocked for use in the standard free-swinging, fleet-type moorings have different dimensions and strengths.

Table 26. Fitting Details Detachable Anchor Connecting Links [1]

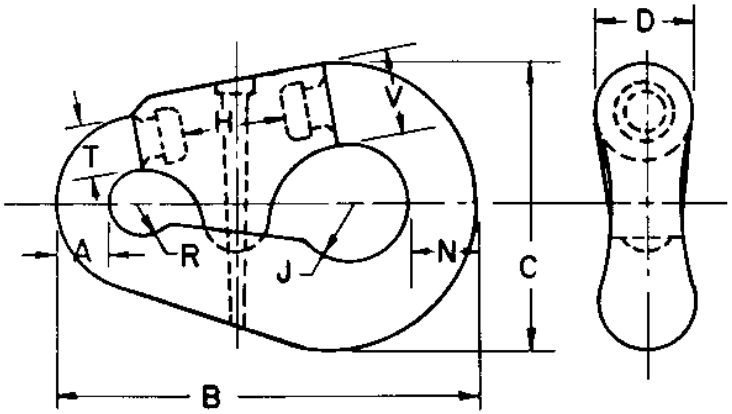

MANF. PART NO.	DIMENSIONS IN INCHES: CHAIN SIZE	A	B	C	D	H	J	N	R	T	V	WEIGHT (LBS.)	TEST REQUIREMENTS: PROOF TEST (LBS.)	BREAK TEST (LBS.)
2	3/4 -15/16	15/16	7-5/8	5-3/16	1-1/2	2-1/4	1-3/16	1-1/4	21/32	15/16	1-3/8	7	74,000	113,500
3	1 -1-3/16	1-3/16	9-3/8	6-9/16	1-13/16	2-19/32	1-3/8	1-1/2	3/4	1-5/16	1-3/4	14	118,000	179,500
4	1-1/4 -1-9/16	1-9/16	11-3/4	8-1/8	2-5/16	3-1/4	1-11/16	1-7/8	1-1/32	1-9/16x1-3/4	2-7/32	28	200,500	302,500
5	1-5/8 -2	2	14-7/8	10-1/4	3	3-15/16	2-1/16	2-1/2	1-1/4	2-5/16x2-3/8	2-29/32	60	322,000	488,500
6	2-1/16 -2-3/8	2-3/8	17-7/8	12-5/16	3-5/8	4-3/4	2-17/32	3	1-15/32	2-7/16x2-7/8	3-15/32	107	447,000	675,500
7	2-7/16 -3-1/8	3-1/8	22-1/8	14-13/16	4-5/8	5-7/8	3	3-3/4	1-29/32	3-3/8 x3-1/8	4-3/8	208	748,000	1,128,000
8	3-3/16 -3-5/8	3-5/8	25-3/4	16-1/2	5-1/4	5-7/8	3-1/8	4-7/8	2-1/8	4-3/8 x4	5-1/8x5-1/4	328	1,021,000	1,566,000
9	3-11/16-3-3/4	3-7/8	27-1/4	17-1/8	5-3/4	6-1/4	3-1/4	5-1/8	2-1/4	4-7/8 x5-3/8	5-9/16	520	1,120,000	1,750,000
10	3-13/16-4	4-3/4	35	22-1/2	7-1/2	7-1/2	4-1/4	6-1/2	2-7/8	5-1/8	7-1/8	850	1,298,000	1,996,500
11	4-1/16 -4-3/8	5	37	24	8	8	4-3/8	6-7/8	3	5-3/4 x6-1/8	7-5/8	925	1,569,007	2,398,000
12	4-5/16 -4-1/2	5-1/4	39	25-1/2	8-1/2	8-1/2	4-1/2	7-1/4	4-1/8	6-1/2 x6-7/8	8	1010	1,870,000	2,805,000

[1] Data provided by Baldt, Inc. For markings and general notes, see Table 10. Similar links that are stocked for use in the standard free-swinging, fleet-type moorings have different dimensions and strengths.

Table 27. Fitting Details Round and Screw Pin Chain Shackles [1]

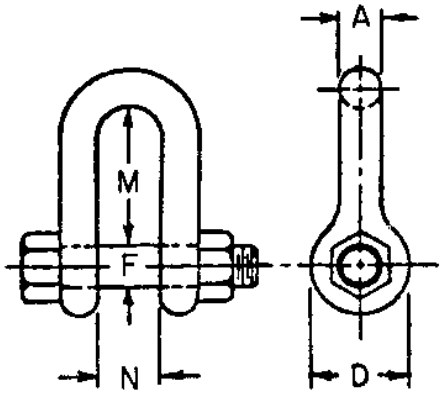

ROUND PIN CHAIN SHACKLES

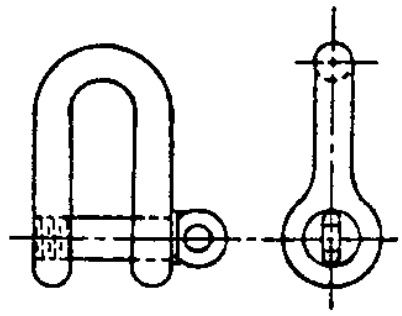

SCREW PIN CHAIN SHACKLES

DIMENSIONS IN INCHES						TEST REQUIREMENTS	
CHAIN SIZE A	D	F	M	N	WEIGHT (LBS.)	PROOF TEST (LBS.)	BREAK TEST (LBS.)
1/2	1-5/16	5/8	1-5/8	13/16	0.75	8,800	24,000
5/8	1-9/16	3/4	2	1-1/16	1.47	14,300	39,000
3/4	1-7/8	7/8	2-3/8	1-1/4	2.52	20,900	57,000
7/8	2-1/8	1	2-13/16	1-7/16	3.83	28,600	78,000
1	2-3/8	1-1/8	3-3/16	1-11/16	5.55	37,400	102,000
1-1/8	2-5/8	1-1/4	3-9/16	1-13/16	7.60	41,800	114,000
1-1/4	3	1-3/8	3-15/16	2-1/32	10.81	52,800	144,000
1-3/8	3-5/16	1-1/2	4-7/16	2-1/4	14.26	59,400	162,000
1-1/2	3-5/8	1-5/8	4-7/8	2-3/8	19.03	74,800	204,000
1-3/4	4-5/16	2	5-3/4	2-7/8	31.40	110,000	300,000
2	5	2-1/4	6-3/4	3-1/4	45.00	154,000	420,000
2-1/2	6	2-3/4	8	4-1/8	83.59	242,000	660,000
*3	6-1/2	3-1/4	8-1/2	5	178.00	374,000	1,020,000
*3-1/2	8	3-3/4	10-1/2	5-3/4	265.00	528,000	1,440,000

* FURNISHED IN ROUND PIN ONLY.

[1] Data provided by Baldt, Inc. and The Crosby Group. These shackles conform to Fed. Spec. RR-C-271B. For markings and general notes, see Table 10.

Table 28. Fitting Details Chain Shackles — "D" Type [1]

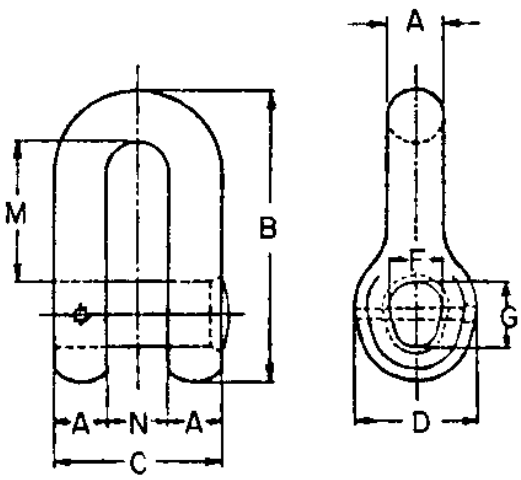

A = 1.3d
B = 7.1d
C = 4.0d
D = 2.8d
F = 1.2d
G = 1.6d
M = 3.4d
N = 1.4d

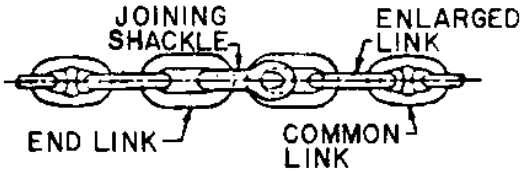

DIMENSIONS IN INCHES

CHAIN SIZE (d)	A	B	C	D	F	G	M	N	WEIGHT (LBS.)
3/4	1	5-5/16	3	2-1/8	15/16	1-3/16	2-9/16	1-1/16	3.7
13/16	1-1/16	5-3/4	3-1/4	2-1/4	1	1-5/16	2-3/4	1-1/8	4.8
7/8	1-1/8	6-3/16	3-1/2	2-7/16	1-1/16	1-3/8	3	1-1/4	5.9
15/16	1-1/4	6-5/8	3-3/4	2-5/8	1-1/8	1-1/2	3-3/16	1-5/16	7.7
1	1-5/16	7-1/8	4	2-13/16	1-3/16	1-5/8	3-3/8	1-3/8	9.2
1-1/16	1-3/8	7-9/16	4-1/4	3	1-1/4	1-11/16	3-5/8	1-1/2	11.0
1-1/8	1-7/16	8	4-1/2	3-1/8	1-3/8	1-13/16	3-13/16	1-9/16	12.8
1-3/16	1-9/16	8-7/16	4-3/4	3-5/16	1-7/16	1-15/16	4-1/16	1-11/16	15.0
1-1/4	1-5/8	8-7/8	5	3-1/2	1-1/2	2	4-1/4	1-3/4	17.2
1-5/16	1-11/16	9-5/16	5-1/4	3-11/16	1-9/16	2-1/8	4-7/16	1-13/16	20.7
1-3/8	1-13/16	9-3/4	5-1/2	3-7/8	1-5/8	2-3/16	4-11/16	1-15/16	23.8
1-7/16	1-7/8	10-3/16	5-3/4	4	1-3/4	2-5/16	4-7/8	2	26.8
1-1/2	1-15/16	10-5/8	6	4-3/16	1-13/16	2-3/8	5-1/8	2-1/8	30.4
1-9/16	2-1/16	11-1/8	6-1/4	4-3/8	1-7/8	2-1/2	5-3/16	2-3/16	34.1
1-5/8	2-1/8	11-9/16	6-1/2	4-9/16	1-15/16	2-5/8	5-1/2	2-1/4	39.4
1-11/16	2-3/16	12	6-3/4	4-3/4	2	2-11/16	5-3/4	2-3/8	44.0
1-3/4	2-1/4	12-7/16	7	4-7/8	2-1/8	2-13/16	5-15/16	2-7/16	48.6
1-13/16	2-3/8	12-7/8	7-1/4	5-1/16	2-3/16	2-7/8	6-3/16	2-9/16	53.7
1-7/8	2-7/16	13-5/16	7-1/2	5-1/4	2-1/4	3	6-3/8	2-5/8	59.2
1-15/16	2-1/2	13-3/4	7-3/4	5-7/16	2-5/16	3-1/8	6-9/16	2-11/16	64.9
2	2-5/8	14-3/16	8	5-5/8	2-3/8	3-3/16	6-13/16	2-13/16	73.3
2-1/16	2-11/16	14-5/8	8-1/4	5-3/4	2-1/2	3-5/16	7	2-7/8	79.9
2-1/8	2-3/4	15-1/16	8-1/2	5-15/16	2-9/16	3-3/8	7-1/4	3	86.9
2-3/16	2-7/8	15-9/16	8-3/4	6-1/8	2-5/8	3-1/2	7-7/16	3-1/16	94.6
2-1/4	2-15/16	16	9	6-5/16	2-11/16	3-5/8	7-5/8	3-1/8	102.3
2-5/16	3	16-7/16	9-1/4	6-1/2	2-3/4	3-11/16	7-7/8	3-1/4	110.7
2-3/8	3-1/16	16-7/8	9-1/2	6-5/8	2-7/8	3-13/16	8-1/16	3-5/16	122.3
2-7/16	3-3/16	17-5/16	9-3/4	6-13/16	2-15/16	3-7/8	8-5/16	3-7/16	131.6
2-1/2	3-1/4	17-3/4	10	7	3	4	8-1/2	3-1/2	141.5
2-9/16	3-5/16	18-3/16	10-1/4	7-3/16	3-1/16	4-1/8	8-11/16	3-9/16	151.8
2-5/8	3-7/16	18-5/8	10-1/2	7-3/8	3-1/8	4-3/16	8-15/16	3-11/16	162.4
2-11/16	3-1/2	19-1/16	10-3/4	7-1/2	3-1/4	4-5/16	9-1/8	3-3/4	173.6
2-3/4	3-9/16	19-1/2	11	7-11/16	3-5/16	4-3/8	9-3/8	3-7/8	185.5
2-13/16	3-11/16	20	11-1/4	7-7/8	3-3/8	4-1/2	9-9/16	3-15/16	202.0
2-7/8	3-3/4	20-7/16	11-1/2	8-7/16	3-7/16	4-5/8	9-3/4	4	214.7

[1] Data provided by Vicinay International Co., Inc. Proof test is same as connecting chain. Breaking strengths are equivalent to A.B.S. Gr. 1, 2, or 3 chain. For markings and general notes, see Table 10.

Table 28. Fitting Details Chain Shackles — "D" Type [1] (Continued)

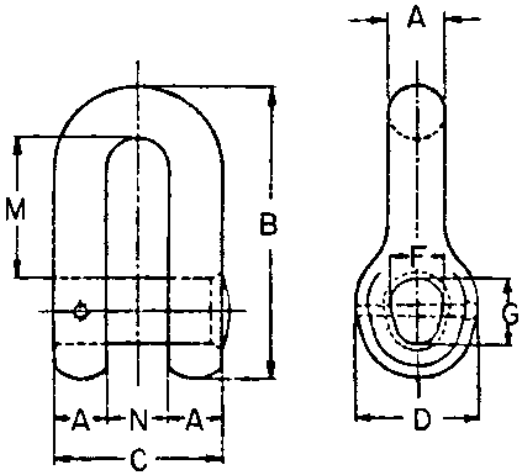

A = 1.3d
B = 7.1d
C = 4.0d
D = 2.8d
F = 1.2 d
G = 1.6 d
M = 3.4 d
N = 1.4 d

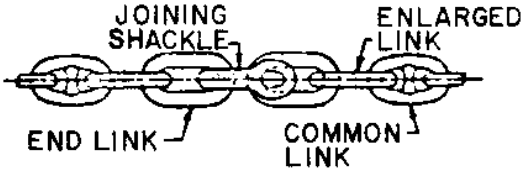

DIMENSIONS IN INCHES

CHAIN SIZE (d)	A	B	C	D	F	G	M	N	WEIGHT (LBS.)
2-15/16	3-13/16	20-7/8	11-3/4	8-1/4	3-1/2	4-11/16	10	4-1/8	228
3	3-7/8	21-5/16	12	8-3/8	3-5/8	4-13/16	10-3/16	4-3/16	242
3-1/16	4	21-3/4	12-1/4	8-9/16	3-11/16	4-7/8	10-7/16	4-5/16	257
3-1/8	4-1/16	22-3/16	12-1/2	8-3/4	3-3/4	5	10-5/8	4-3/8	277
3-3/16	4-1/8	22-5/8	12-3/4	8-15/16	3-13/16	5-1/8	10-13/16	4-7/16	293
3-1/4	4-1/4	23-1/16	13	9-1/8	3-7/8	5-3/16	11-1/16	4-9/16	310
3-5/16	4-5/16	23-1/2	13-1/4	9-1/4	4	5-5/16	11-1/4	4-5/8	328
3-3/8	4-3/8	23-15/16	13-1/2	9-7/16	4-1/16	5-3/8	11-1/2	4-3/4	350
3-7/16	4-1/2	24-7/16	13-3/4	9-5/8	4-1/8	5-1/2	11-11/16	4-13/16	370
3-1/2	4-9/16	24-7/8	14	9-13/16	4-3/16	5-5/8	11-7/8	4-7/8	389
3-9/16	4-5/8	25-5/16	14-1/4	10	4-1/4	5-11/16	12-1/8	5	409
3-5/8	4-11/16	25-3/4	14-1/2	10-1/8	4-3/8	5-13/16	12-5/16	5-1/16	429
3-11/16	4-13/16	26-3/16	14-3/4	10-5/16	4-7/16	5-7/8	12-9/16	5-3/16	451
3-3/4	4-7/8	26-5/8	15	10-1/2	4-1/2	6	12-3/4	5-1/4	473
3-13/16	4-15/16	27-1/16	15-1/4	10-11/16	4-9/16	6-1/8	12-15/16	5-5/16	504
3-7/8	5-1/16	27-1/2	15-1/2	10-7/8	4-5/8	6-3/16	13-3/16	5-7/16	528
3-15/16	5-1/8	27-15/16	15-3/4	11	4-3/4	6-5/16	13-3/8	5-1/2	552
4	5-3/16	28-3/8	16	11-3/16	4-13/16	6-3/8	13-5/8	5-5/8	576
4-1/8	5-3/8	29-5/16	16-1/2	11-9/16	4-15/16	6-5/8	14	5-3/4	640
4-1/4	5-1/2	30-3/16	17	11-7/8	5-1/8	6-13/16	14-7/16	5-15/16	695
4-3/8	5-11/16	31-1/16	17-1/2	12-1/4	5-1/4	7	14-7/8	6-1/8	755
4-1/2	5-7/8	31-15/16	18	12-5/8	5-3/8	7-3/16	15-5/16	6-5/16	829
4-5/8	6	32-13/16	18-1/2	12-15/16	5-9/16	7-3/8	15-3/4	6-1/2	895
4-3/4	6-3/16	33-3/4	19	13-5/16	5-11/16	7-5/8	16-1/8	6-5/8	966
4-7/8	6-5/16	34-5/8	19-1/2	13-5/8	5-7/8	7-13/16	16-9/16	6-13/16	1054
5	6-1/2	35-1/2	20	14	6	8	17	7	1131
5-1/8	6-11/16	36-3/8	20-1/2	14-3/8	6-1/8	8-3/16	17-7/16	7-3/16	1212
5-1/4	6-13/16	37-1/4	21	14-11/16	6-5/16	8-3/8	17-7/8	7-3/8	1313
5-3/8	7	38-3/16	21-1/2	15-1/16	6-7/16	8-5/8	18-1/4	7-1/2	1404
5-1/2	7-1/8	39-1/16	22	15-3/8	6-5/8	8-13/16	18-11/16	7-11/16	1516
5-5/8	7-5/16	39-15/16	22-1/2	15-3/4	6-3/4	9	19-1/8	7-7/8	1615
5-3/4	7-1/2	40-13/16	23	16-1/8	6-7/8	9-3/16	19-9/16	8-1/16	1718
5-7/8	7-5/8	41-11/16	23-1/2	16-7/16	7-1/16	9-3/8	20	8-1/4	1846
6	7-13/16	42-5/8	24	16-13/16	7-3/16	9-5/8	20-3/8	8-3/8	1958

[1] Data provided by Vicinay International Co., Inc. Proof test is same as connecting chain. Breaking strengths are equivalent to A.B.S. Gr. 1, 2, or 3 chain. For markings and general notes, see Table 10.

Table 29. Fitting Details End Shackles [1]

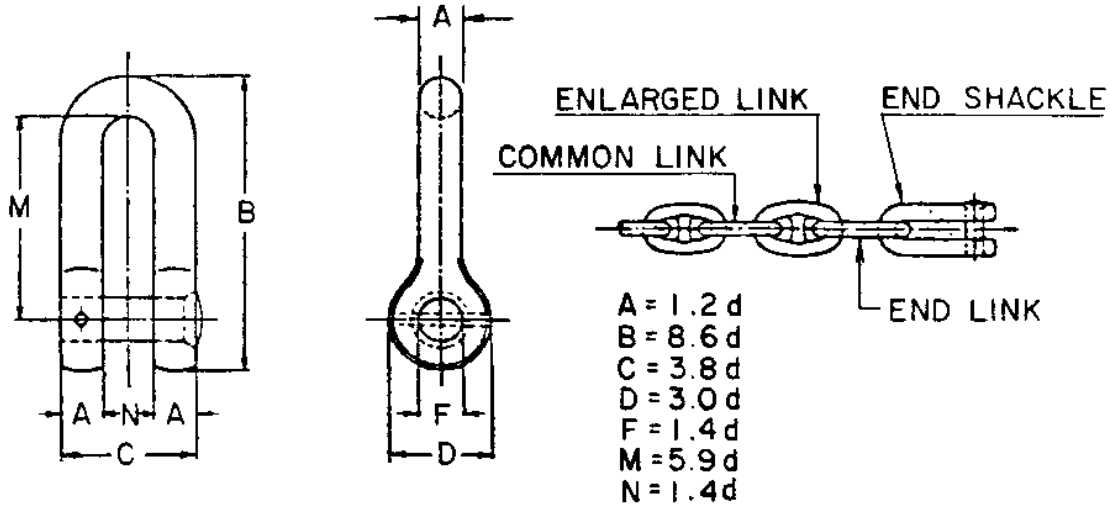

DIMENSIONS IN INCHES

CHAIN SIZE (d)	A	B	C	D	F,N	M	WEIGHT (LBS.)
3/4	15/16	6-7/16	2-7/8	2-1/4	1-1/16	4-7/16	3.5
13/16	1	7	3-1/16	2-7/16	1-1/8	4-13/16	4.2
7/8	1-1/16	7-1/2	3-5/16	2-5/8	1-1/4	5-3/16	5.3
15/16	1-1/8	8-1/16	3-9/16	2-13/16	1-5/16	5-9/16	6.8
1	1-3/16	8-5/8	3-13/16	3	1-3/8	5-7/8	8.4
1-1/16	1-1/4	9-1/8	4-1/16	3-3/16	1-1/2	6-1/4	9.9
1-1/8	1-3/8	9-11/16	4-1/4	3-3/8	1-9/16	6-5/8	11.4
1-3/16	1-7/16	10-3/16	4-1/2	3-9/16	1-11/16	7	13.4
1-1/4	1-1/2	10-3/4	4-3/4	3-3/4	1-3/4	7-3/8	15.6
1-5/16	1-9/16	11-5/16	5	3-15/16	1-13/16	7-3/4	18.7
1-3/8	1-5/8	11-13/16	5-1/4	4-1/8	1-15/16	8-1/8	21.6
1-7/16	1-3/4	12-3/8	5-7/16	4-5/16	2	8-1/2	24.2
1-1/2	1-13/16	12-7/8	5-11/16	4-1/2	2-1/8	8-7/8	27.3
1-9/16	1-7/8	13-7/16	5-15/16	4-11/16	2-3/16	9-1/4	30.8
1-5/8	1-15/16	14	6-3/16	4-7/8	2-1/4	9-9/16	35.6
1-11/16	2	14-1/2	6-7/16	5-1/16	2-3/8	9-15/16	39.6
1-3/4	2-1/8	15-1/16	6-5/8	5-1/4	2-7/16	10-5/16	44.0
1-13/16	2-3/16	15-9/16	6-7/8	5-7/16	2-9/16	10-11/16	48.6
1-7/8	2-1/4	16-1/8	7-1/8	5-5/8	2-5/8	11-1/16	53.5
1-15/16	2-5/16	16-11/16	7-3/8	5-13/16	2-11/16	11-7/16	58.7
2	2-3/8	17-3/16	7-5/8	6	2-13/16	11-13/16	66.0
2-1/16	2-1/2	17-3/4	7-13/16	6-3/16	2-7/8	12-3/16	72.2
2-1/8	2-9/16	18-1/4	8-1/16	6-3/8	3	12-9/16	78.5
2-3/16	2-5/8	18-13/16	8-5/16	6-9/16	3-1/16	12-15/16	85.4
2-1/4	2-11/16	19-3/8	8-9/16	6-3/4	3-1/8	13-1/4	92.4
2-5/16	2-3/4	19-7/8	8-13/16	6-15/16	3-1/4	13-5/8	99.0
2-3/8	2-7/8	20-7/16	9	7-1/8	3-5/16	14	110.4
2-7/16	2-15/16	20-15/16	9-1/4	7-5/16	3-7/16	14-3/8	118.8
2-1/2	3	21-1/2	9-1/2	7-1/2	3-1/2	14-3/4	127.6
2-9/16	3-1/16	22-1/16	9-3/4	7-11/16	3-9/16	15-1/8	137.3
2-5/8	3-1/8	22-9/16	10	7-7/8	3-11/16	15-1/2	146.7
2-11/16	3-1/4	23-1/8	10-3/16	8-1/16	3-3/4	15-7/8	156.9
2-3/4	3-5/16	23-5/8	10-7/16	8-1/4	3-7/8	16-1/4	167.4
2-13/16	3-3/8	24-3/16	10-11/16	8-7/16	3-15/16	16-5/8	182.4
2-7/8	3-7/16	24-3/4	10-15/16	8-5/8	4	17	194.0

[1] Data provided by Vicinay International Co., Inc. Proof test is same as connecting chain. Breaking strengths are equivalent to A.B.S. Gr. 1, 2, or 3 chain. For markings and general notes, see Table 10.

Table 29. Fitting Details End Shackles [1] (Continued)

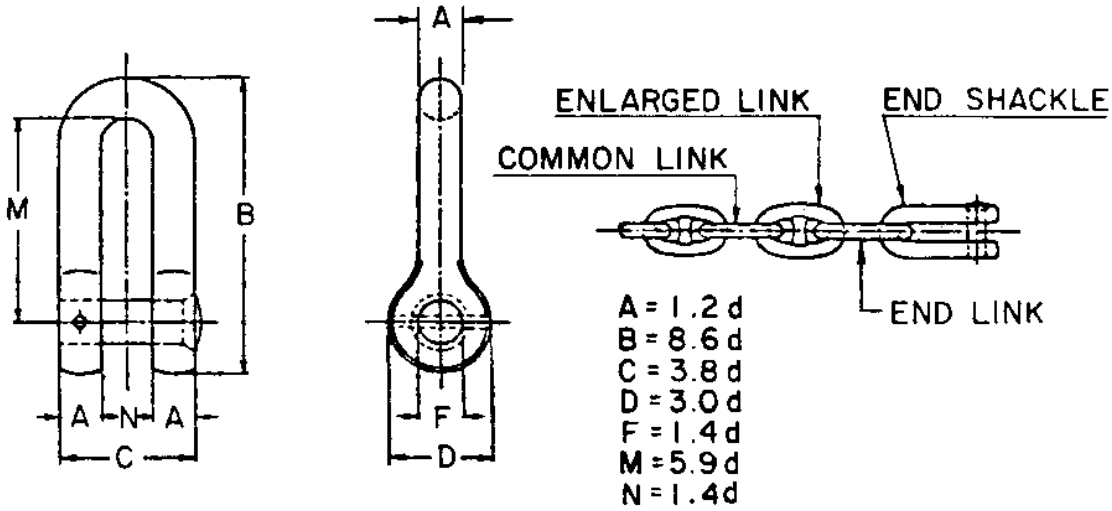

DIMENSIONS IN INCHES

CHAIN SIZE (d)	A	B	C	D	F, N	M	WEIGHT (LBS.)
2-15/16	3-1/2	25-1/4	11-3/16	8-13/16	4-1/8	17-5/16	206
3	3-5/8	25-13/16	11-3/8	9	4-3/16	17-11/16	220
3-1/16	3-11/16	26-3/16	11-5/8	9-3/16	4-5/16	18-1/16	233
3-1/8	3-3/4	26-7/8	11-7/8	9-3/8	4-3/8	18-7/16	251
3-3/16	3-13/16	27-7/16	12-1/8	9-9/16	4-7/16	18-13/16	266
3-1/4	3-7/8	27-15/16	12-3/8	9-3/4	4-9/16	19-3/16	282
3-5/16	4	28-1/2	12-9/16	9-15/16	4-5/8	19-9/16	297
3-3/8	4-1/16	29	12-13/16	10-1/8	4-3/4	19-15/16	317
3-7/16	4-1/8	29-9/16	13-1/6	10-5/16	4-13/16	20-5/16	334
3-1/2	4-3/16	30-1/8	13-5/16	10-1/2	4-7/8	20-5/8	352
3-9/16	4-1/4	30-5/8	13-9/16	10-11/16	5	21	370
3-5/8	4-3/8	31-3/16	13-3/4	10-7/8	5-1/16	21-3/8	389
3-11/16	4-7/16	31-11/16	14	11-1/16	5-3/16	21-3/4	407
3-3/4	4-1/2	32-1/4	14-1/4	11-1/4	5-1/4	22-1/8	429
3-13/16	4-9/16	32-13/16	14-1/2	11-7/16	5-5/16	22-1/2	455
3-7/8	4-5/8	33-5/16	14-3/4	11-5/8	5-7/16	22-7/8	477
3-15/16	4-3/4	33-7/8	14-15/16	11-13/16	5-1/2	23-1/4	499
4	4-13/16	34-3/8	15-3/16	12	5-5/8	23-5/8	521
4-1/8	4-15/16	35-1/2	15-11/16	12-3/8	5-3/4	24-5/16	579
4-1/4	5-1/8	36-9/16	16-1/8	12-3/4	5-15/16	25-1/16	629
4-3/8	5-1/4	37-5/8	16-5/8	13-1/8	6-1/8	25-13/16	684
4-1/2	5-3/8	38-11/16	17-1/8	13-1/2	6-5/16	26-9/16	750
4-5/8	5-9/16	39-3/4	17-9/16	13-7/8	6-1/2	27-5/16	812
4-3/4	5-11/16	40-7/8	18-1/16	14-1/4	6-5/8	28	873
4-7/8	5-7/8	41-15/16	18-1/2	14-5/8	6-13/16	28-3/4	953
5	6	43	19	15	7	29-1/2	1023
5-1/8	6-1/8	44-1/16	19-1/2	15-3/8	7-3/16	30-1/4	1098
5-1/4	6-5/16	45-1/8	19-15/16	15-3/4	7-3/8	31	1188
5-3/8	6-7/16	46-1/4	20-7/16	16-1/8	7-1/2	31-11/16	1269
5-1/2	6-5/8	47-5/16	20-7/8	16-1/2	7-11/16	32-7/16	1371
5-5/8	6-3/4	48-3/8	21-3/8	16-7/8	7-7/8	33-3/16	1461
5-3/4	6-7/8	49-7/16	21-7/8	17-1/4	8-1/16	33-15/16	1553
5-7/8	7-1/16	50-1/2	22-5/16	17-5/8	8-1/4	34-11/16	1668
6	7-3/16	51-5/8	22-13/16	18	8-3/8	35-3/8	1771

[1] Data provided by Vicinay International Co., Inc. Proof test is same as connecting chain. Breaking strengths are equivalent to A.B.S. Gr. 1, 2, or 3 chain. For markings and general notes, see Table 10.

Table 30. Fitting Details Round Pin Anchor and End Shackles [1]

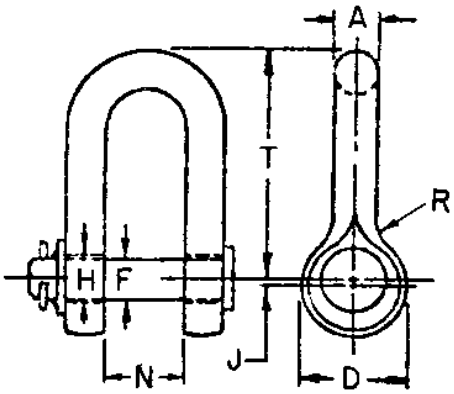

ROUND PIN ANCHOR SHACKLE

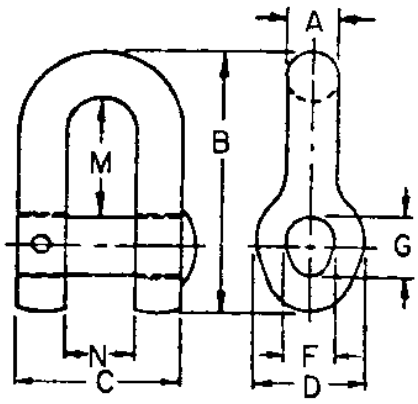

END SHACKLE

ROUND PIN ANCHOR SHACKLE

DIMENSIONS IN INCHES									TEST REQUIREMENTS	
CHAIN SIZE A	D	F	H	J	N	R	T	WEIGHT (LBS.)	PROOF TEST (LBS.)	BREAK TEST (LBS.)
1	2-1/2	1	1-1/8	1/8	2-1/4	1	6-1/2	6	42,000	60,000
1-1/4	3-3/8	1-1/2	1-5/8	1/8	2-3/4	1-1/4	8-1/4	11	64,500	92,000
1-1/2	3-5/8	1-1/2	1-5/8	1/8	2-3/4	1-1/2	9	16	92,000	131,000
1-3/4	4-1/2	2	2-1/4	3/16	3-1/4	1-3/4	10-1/4	29	124,000	176,000
2	4-7/8	2	2-1/4	1/4	3-3/4	2	11-3/4	43	159,000	227,000
2-1/4	5-5/8	2-1/2	2-3/4	5/16	4-1/4	2-1/4	13-1/4	59	198,000	284,000
2-1/2	6	2-1/2	2-3/4	5/16	4-1/4	2-1/2	14-1/2	78	242,000	346,000
3	7-1/4	3	3-1/4	3/8	4-3/4	3	18	136	340,000	485,000
3-1/2	7-13/16	3-1/2	3-3/4	7/16	5-1/4	3-1/2	20-1/2	207	450,000	643,000
4	9-1/2	4	4-1/4	7/16	5-3/4	4	23	339	571,000	816,000
4-1/2	10-3/4	4-1/2	4-3/4	1/2	6-3/4	4-1/2	26-1/2	466	703,000	1,004,000
5	11-11/16	5	5-1/4	1/2	7-1/4	5	29	625	842,000	1,203,000

END SHACKLE

DIMENSIONS IN INCHES										TEST REQUIREMENTS	
CHAIN SIZE		A	B	C	D	F	G	M	N	WEIGHT (LBS.)	PROOF TEST (LBS.)	BREAK TEST (LBS.)
1/2	-5/8	13/16	5-3/16	3-1/4	2	1	1-1/8	-	1-5/8	3	32,300	52,200
11/16	-3/4	1	6-1/4	4	2-3/8	1-1/8	1-3/8	3-1/8	2	5	48,000	75,000
13/16	-7/8	1-1/8	7-1/4	4-1/2	2-5/8	1-1/4	1-9/16	3-5/8	2-1/4	8	64,000	98,000
15/16	-1	1-1/4	7-7/8	4-7/8	3	1-3/8	1-3/4	3-7/8	2-3/8	10	84,000	129,000
1-1/16	-1-1/8	1-3/8	8-5/8	5-3/8	3-3/8	1-1/2	1-15/16	4-1/4	2-5/8	14	106,000	161,000
1-3/16	-1-1/4	1-1/2	9-3/8	5-7/8	3-5/8	1-3/4	2-1/8	4-5/8	2-7/8	19	130,000	198,000
1-5/16	-1-3/8	1-3/4	10-3/4	6-1/2	4-1/4	2	2-1/2	5-1/8	3	27	157,000	235,000
1-7/16	-1-1/2	1-7/8	11-1/2	6-7/8	4-5/8	2-1/4	2-3/4	5-3/8	3-1/8	34	185,000	280,000
1-9/16	-1-5/8	2	12-1/4	7-3/8	5	2-3/8	2-15/16	5-3/4	3-3/8	40	216,000	325,000
1-11/16	-1-3/4	2-1/4	13-1/8	8-1/8	5-1/4	2-1/2	3-1/8	6-1/8	3-5/8	52	249,000	380,000
1-13/16	-1-7/8	2-1/2	14-5/8	8-3/4	6	2-7/8	3-1/2	6-3/4	3-3/4	76	285,000	432,000
1-15/16	-2-1/8	2-3/4	15-7/8	9-1/2	6-5/8	3-1/8	3-7/8	7-1/8	4	100	362,000	548,000
2-3/16	-2-3/8	3	17-3/8	10-3/8	7-1/4	3-3/8	4-1/4	7-3/4	4-3/8	131	447,000	675,000
2-7/16	-2-5/8	3-1/4	19-1/8	11-1/8	8	3-3/4	4-5/8	8-3/4	4-5/8	170	540,000	813,000
2-11/16	-2-7/8	3-5/8	20-1/2	12-3/8	8-5/8	4	5	9-1/8	5-1/8	212	640,000	965,000
3	-3-1/8	4	22-5/8	13-1/4	9-5/8	4-1/2	5-5/8	9-7/8	5-1/4	293	748,000	1,128,000
3-1/4	-3-3/8	4-1/4	24	13-7/8	10-1/4	4-7/8	6	10-1/2	5-3/8	358	862,000	1,296,000
3-1/2		4-1/2	25-1/2	14-3/4	10-7/8	5-7/16	6-3/8	11-1/8	5-3/4	427	922,000	1,383,000
3-3/4		4-7/8	27-5/8	16	11-3/4	5-3/4	6-15/16	12	6-1/4	552	1,120,000	1,750,000

[1] Data provided by Baldt, Inc. For markings and general notes, see Table 10.

Table 31. Fitting Details Round and Screw Pin Anchor Shackles [1]

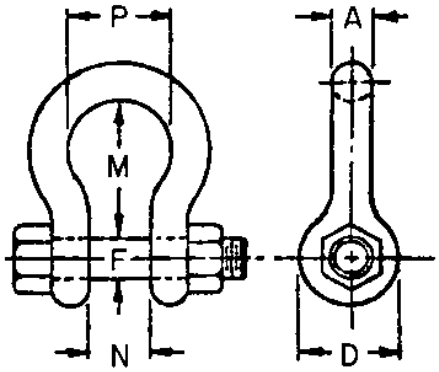

ROUND PIN ANCHOR SHACKLES

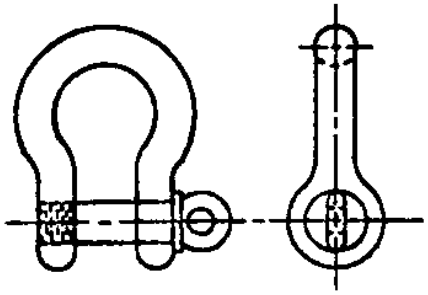

SCREW PIN ANCHOR SHACKLES

DIMENSIONS IN INCHES							TEST REQUIREMENTS	
CHAIN SIZE A	D	F	M	N	P	WEIGHT (LBS.)	PROOF TEST (LBS.)	BREAK TEST (LBS.)
1/2	1-3/16	5/8	1-7/8	13/16	1-5/16	0.79	8,800	24,000
5/8	1-9/16	3/4	2-3/8	1-1/16	1-11/16	1.60	14,300	39,000
3/4	1-7/8	7/8	2-13/16	1-1/4	2	2.72	20,900	57,000
7/8	2-1/8	1	3-5/16	1-7/16	2-9/32	3.95	28,600	78,000
1	2-3/8	1-1/8	3-3/4	1-11/16	2-11/16	6.12	37,400	102,000
1-1/8	2-5/8	1-1/4	4-1/4	1-13/16	2-29/32	8.27	41,800	114,000
1-1/4	3	1-3/8	4-11/16	2-1/32	3-1/4	11.71	52,800	144,000
1-3/8	3-5/16	1-1/2	5-1/4	2-1/4	3-5/8	15.83	59,400	162,000
1-1/2	3-5/8	1-5/8	5-3/4	2-3/8	3-7/8	20.80	74,800	204,000
1-3/4	4-5/16	2	7	2-7/8	5	33.91	110,000	300,000
2	5	2-1/4	7-3/4	3-1/4	5-3/4	51.75	154,000	420,000
2-1/2	6	2-3/4	10-1/2	4-1/8	7-1/4	101.59	242,000	660,000
*3	6-1/2	3-1/4	13	5	7-7/8	178.00	374,000	1,020,000

*FURNISHED IN ROUND PIN ONLY.

[1] Data provided by Baldt, Inc. and The Crosby Group. For markings and general notes, see Table 10.

Table 32. Fitting Details Round Pin Anchor Shackles [1]

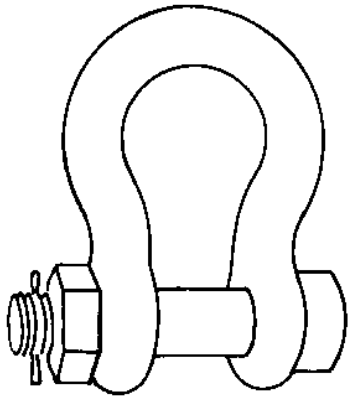

TYPE "A"

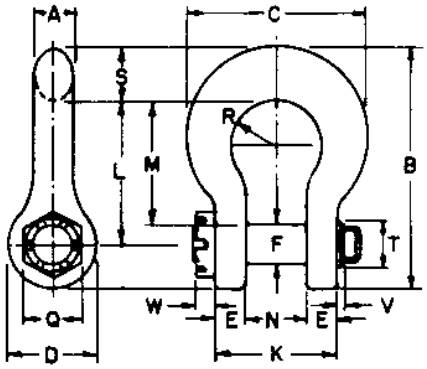

TYPE "B"

TYPE "A" SHACKLE

DIMENSIONS IN INCHES						TEST REQUIREMENTS	
CHAIN SIZE A	D	F	M	N	WEIGHT (LBS.)	PROOF TEST (LBS.)	BREAK TEST (LBS.)
1-1/2	3-5/8	1-5/8	5-3/4	2-3/8	20.8	132,000	360,000
1-3/4	4-1/8	2	7	2-7/8	33.9	176,000	480,000
2	5	2-1/4	7-3/4	3-1/4	51.7	220,000	600,000
2-1/2	6	2-3/4	10-1/2	4-1/8	101.5	352,000	960,000
3	6-1/2	3-1/4	13	5	178.0	484,000	1,320,000
3-1/2	8	3-3/4	14-5/8	5-1/4	265.0	616,000	1,680,000
4	9	4-1/4	14-1/2	5-1/2	338.0	770,000	2,100,000

TYPE "B" SHACKLE

SHACK. NO.	DIMENSIONS IN INCHES															
	A	B	C	D	E	F	K	L	M	N	Q	R	S	T	V	W
1	4-1/2	29-1/4	21	10-1/2	3-3/4	4-3/4	14-3/4	18	15-1/2	7-1/4	6	5-1/2	6	5-1/2	1	2
2	4-1/2	35	24-1/2	12	3-3/4	5	16	22-1/2	20	8-1/2	6-3/4	6-1/2	6-1/2	5-3/4	1	2
3	5	35-1/4	25	12	4-3/4	6	18	22-1/2	19-1/2	8-1/2	7-1/2	6-1/2	6-3/4	7	1	2
4	6	40-1/4	26	14	6-1/2	7	24-1/4	26	22-1/2	8-1/4	9-3/4	6-1/2	7-1/4	8	1	2
5	7-1/2	44	28	15	6-1/8	7-1/2	20-7/8	29	25-1/4	8-5/8	9-3/4	6-1/2	7-1/2	8	1-1/2	2
6	8-1/2	53	31	17	6-1/2	8-1/4	22-1/4	36	31-7/8	9-1/4	12-1/2	7	8-1/2	9	1-1/2	3

SHACK. NO.	WEIGHT (LBS.)	TEST REQUIREMENTS PROOF TEST (LBS.)	BREAK TEST (LBS.)
1	450	880,000	1,600,000
2	600	1,100,000	2,000,000
3	775	1,320,000	2,400,000
4	1100	1,760,000	3,200,000
5	1550	2,200,000	4,000,000
6	1900	2,640,000	4,800,000

[1] Data provided by The Crosby Group. For markings and general notes, see Table 10.

Table 33. Fitting Details Extra Heavy Duty Round Pin Anchor Shackles [1]

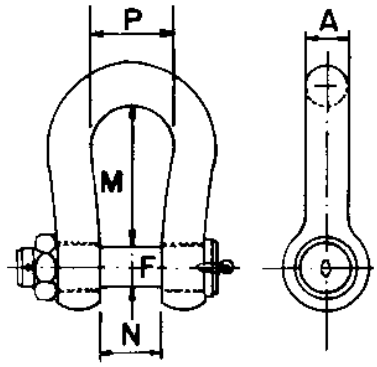

SHACK. NO.	DIMENSIONS IN INCHES A	F	M	N	P	WEIGHT (LBS.)
1	4-1/8	4-1/2	15-3/4	6-1/2	10-13/16	319
2	4-3/4	5-1/8	19-11/16	6-7/8	11-7/16	451
3	5	5-1/2	21-1/4	7-7/8	12	638
4	5-3/8	6	23-5/8	7-7/8	12	1157
5	6-1/2	7	25-5/8	8-7/8	12-13/16	1549
6	7	7-1/4	27-9/16	9-7/8	13-3/4	1844
7	7-3/4	8	29-1/2	10-13/16	14-3/4	2156
8	8	8-1/2	25-5/8	11-13/16	15-3/4	2464

SHACK. NO.	TEST REQUIREMENTS PROOF TEST (LBS.)	BREAK TEST (LBS.)
1	441,000	1,655,000
2	588,000	2,205,000
3	735,000	2,755,000
4	883,000	3,310,000
5	1,176,000	4,410,000
6	1,471,000	5,515,000
7	1,764,000	6,615,000
8	2,059,000	7,720,000

[1] Data provided by D. van Beest en Zonen B.V. For markings and general notes, see Table 10.

Table 34. Fitting Details Anchor Shackles — "D" Type [1]

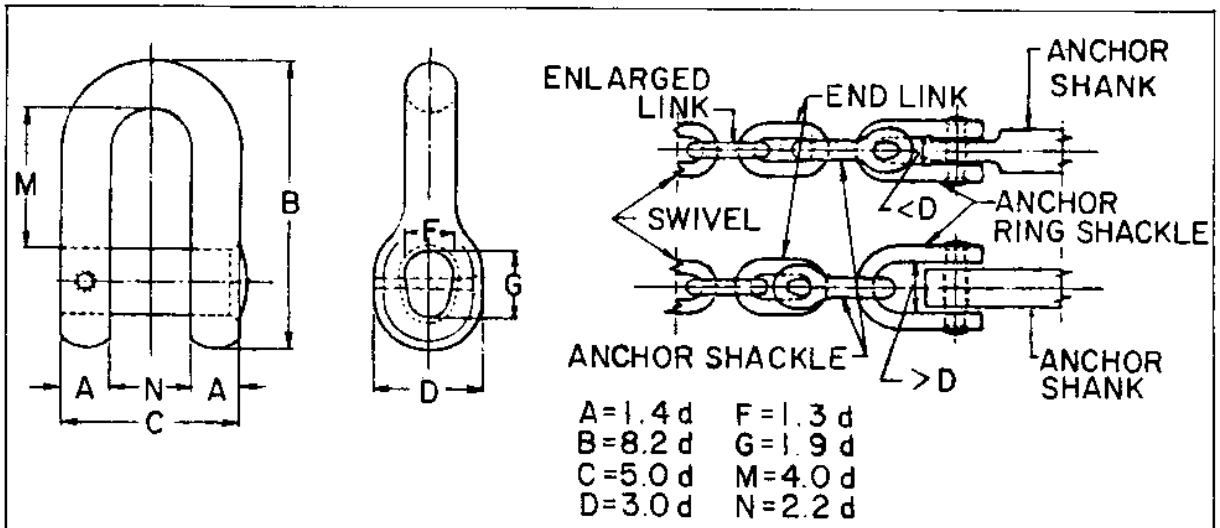

DIMENSIONS IN INCHES

CHAIN SIZE (d)	A	B	C	D	F	G	M	N	WEIGHT (LBS.)
3/4	1-1/16	6-1/8	3-3/4	2-1/4	1	1-7/16	3	1-5/8	5.5
13/16	1-1/8	6-5/8	4-1/16	2-7/16	1-1/16	1-9/16	3-1/4	1-13/16	6.8
7/8	1-1/4	7-1/8	4-3/8	2-5/8	1-1/8	1-11/16	3-1/2	1-15/16	8.4
15/16	1-5/16	7-11/16	4-11/16	2-13/16	1-1/4	1-13/16	3-3/4	2-1/16	11.0
1	1-3/8	8-3/16	5	3	1-5/16	1-7/8	4	2-3/16	13.2
1-1/16	1-1/2	8-11/16	5-5/16	3-3/16	1-3/8	2	4-1/4	2-5/16	15.6
1-1/8	1-9/16	9-1/4	5-5/8	3-3/8	1-7/16	2-1/8	4-1/2	2-1/2	18.5
1-3/16	1-11/16	9-15/16	5-15/16	3-9/16	1-9/16	2-1/4	4-3/4	2-5/8	21.6
1-1/4	1-3/4	10-1/4	6-1/4	3-3/4	1-5/8	2-3/8	5	2-3/4	24.9
1-5/16	1-13/16	10-3/4	6-9/16	3-15/16	1-11/16	2-1/2	5-1/4	2-7/8	29.9
1-3/8	1-15/16	11-1/4	6-7/8	4-1/8	1-13/16	2-5/8	5-1/2	3	34.1
1-7/16	2	11-13/16	7-3/16	4-5/16	1-7/8	2-3/4	5-3/4	3-3/16	38.7
1-1/2	2-1/8	12-5/16	7-1/2	4-1/2	1-15/16	2-7/8	6	3-5/16	43.6
1-9/16	2-3/16	12-13/16	7-13/16	4-11/16	2-1/16	3	6-1/4	3-7/16	49.1
1-5/8	2-1/4	13-1/4	8-1/8	4-7/8	2-1/8	3-1/16	6-1/2	3-9/16	56.8
1-11/16	2-3/8	13-13/16	8-7/16	5-1/16	2-3/16	3-3/16	6-3/4	3-11/16	63.1
1-3/4	2-7/16	14-3/8	8-3/4	5-1/4	2-1/4	3-5/16	7	3-7/8	70.2
1-13/16	2-9/16	14-7/8	9-1/16	5-7/16	2-3/8	3-7/16	7-1/4	4	77.4
1-7/8	2-5/8	15-3/8	9-3/8	5-5/8	2-7/16	3-9/16	7-1/2	4-1/8	85.4
1-15/16	2-11/16	15-7/8	9-11/16	5-13/16	2-1/2	3-11/16	7-3/4	4-1/4	93.5
2	2-13/16	16-3/8	10	6	2-5/8	3-13/16	8	4-3/8	105.6
2-1/16	2-7/8	16-15/16	10-5/16	6-3/16	2-11/16	3-15/16	8-1/4	4-9/16	115.1
2-1/8	3	17-5/16	10-5/8	6-3/8	2-3/4	4-1/16	8-1/2	4-11/16	125.4
2-3/16	3-1/16	17-15/16	10-15/16	6-9/16	2-7/8	4-3/16	8-3/4	4-13/16	136.0
2-1/4	3-1/8	18-7/16	11-1/4	6-3/4	2-15/16	4-1/4	9	4-15/16	147.4
2-5/16	3-1/4	18-15/16	11-9/16	6-15/16	3	4-3/8	9-1/4	5-1/16	159.3
2-3/8	3-5/16	19-1/2	11-7/8	7-1/8	3-1/16	4-1/2	9-1/2	5-1/4	176.2
2-7/16	3-7/16	20	12-3/16	7-5/16	3-3/16	4-5/8	9-3/4	5-3/8	189.6
2-1/2	3-1/2	20-1/2	12-1/2	7-1/2	3-1/4	4-3/4	10	5-1/2	203.7
2-9/16	3-9/16	21	12-13/16	7-11/16	3-5/16	4-7/8	10-1/4	5-5/8	218.5
2-5/8	3-11/16	21-7/16	13-1/8	7-7/8	3-7/16	5	10-1/2	5-3/4	234.1
2-11/16	3-3/4	22-1/16	13-7/16	8-1/16	3-1/2	5-1/8	10-3/4	5-15/16	249.9
2-3/4	3-7/8	22-9/16	13-3/4	8-1/4	3-9/16	5-1/4	11	6-1/16	267.1
2-13/16	3-15/16	23-1/16	14-1/16	8-7/16	3-11/16	5-3/8	11-1/4	6-3/16	290.8
2-7/8	4	23-9/16	14-3/8	8-5/8	3-3/4	5-7/16	11-1/2	6-5/16	309.5

[1] Data provided by Vicinay International Co., Inc. Proof test is same as connecting chain. Breaking strengths are equivalent to A.B.S. Gr. 1, 2, or 3 chain. For markings and general notes, see Table 10.

Table 34. Fitting Details Anchor Shackles — "D" Type [1] (Continued)

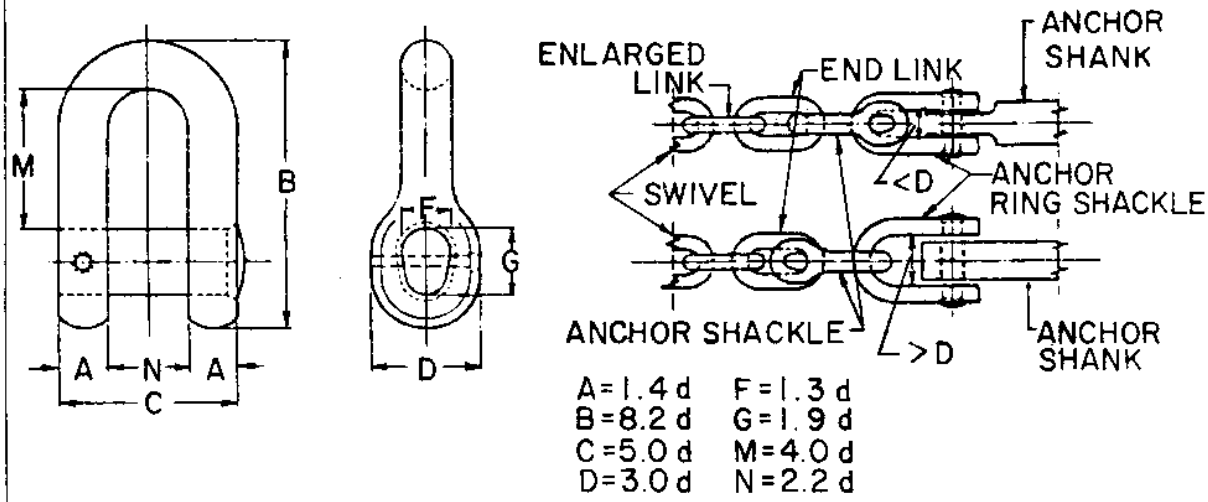

DIMENSIONS IN INCHES

CHAIN SIZE (d)	A	B	C	D	F	G	M	N	WEIGHT (LBS.)
2-15/16	4-1/8	24-1/16	14-11/16	8-13/16	3-13/16	5-9/16	11-3/4	6-7/16	328
3	4-3/16	24-5/8	15	9	3-7/8	5-11/16	12	6-5/8	350
3-1/16	4-5/16	25-1/8	15-5/16	9-3/16	4	5-13/16	12-1/4	6-3/4	370
3-1/8	4-3/8	25-5/8	15-5/8	9-3/8	4-1/16	5-15/16	12-1/2	6-7/8	400
3-3/16	4-7/16	26-1/8	15-15/16	9-9/16	4-1/8	6-1/16	12-3/4	7	422
3-1/4	4-9/16	26-5/8	16-1/4	9-3/4	4-1/4	6-3/16	13	7-1/8	447
3-5/16	4-5/8	27-3/16	16-9/16	9-15/16	4-5/16	6-5/16	13-1/4	7-5/16	471
3-3/8	4-3/4	27-11/16	16-7/8	10-1/8	4-3/8	6-7/16	13-1/2	7-7/16	506
3-7/16	4-13/16	28-3/16	17-3/16	10-5/16	4-1/2	6-9/16	13-3/4	7-9/16	532
3-1/2	4-7/8	28-11/16	17-1/2	10-1/2	4-9/16	6-5/8	14	7-11/16	561
3-9/16	5	29-3/16	17-13/16	10-11/16	4-5/8	6-3/4	14-1/4	7-13/16	590
3-5/8	5-1/16	29-3/4	18-1/8	10-7/8	4-11/16	6-7/8	14-1/2	8	618
3-11/16	5-3/16	30-1/4	18-7/16	11-1/16	4-13/16	7	14-3/4	8-1/8	649
3-3/4	5-1/4	30-3/4	18-3/4	11-1/4	4-7/8	7-1/8	15	8-1/4	682
3-13/16	5-5/16	31-1/4	19-1/16	11-7/16	4-15/16	7-1/4	15-1/4	8-3/8	726
3-7/8	5-7/16	31-3/4	19-3/8	11-5/8	5-1/16	7-3/8	15-1/2	8-1/2	759
3-15/16	5-1/2	32-5/16	9-11/16	11-13/16	5-1/8	7-1/2	15-3/4	8-11/16	794
4	5-5/8	32-13/16	20	12	5-3/16	7-5/8	16	8-13/16	832
4-1/8	5-3/4	33-13/16	20-5/8	12-3/8	5-3/8	7-13/16	16-1/2	9-1/16	920
4-1/4	5-15/16	34-7/8	21-1/4	12-3/4	5-1/2	8-1/16	17	9-3/8	1001
4-3/8	6-1/8	35-7/8	21-7/8	13-1/8	5-11/16	8-5/16	17-1/2	9-5/8	1087
4-1/2	6-5/16	36-7/8	22-1/2	13-1/2	5-7/8	8-9/16	18	9-7/8	1197
4-5/8	6-1/2	37-15/16	23-1/8	13-7/8	6	8-13/16	18-1/2	10-3/16	1289
4-3/4	6-5/8	38-15/16	23-3/4	14-1/4	6-3/16	9	19	10-7/16	1390
4-7/8	6-13/16	40	24-3/8	14-5/8	6-5/16	9-1/4	19-1/2	10-3/4	1514
5	7	41	25	15	6-1/2	9-1/2	20	11	1626
5-1/8	7-3/16	42	25-5/8	15-3/8	6-11/16	9-3/4	20-1/2	11-1/4	1745
5-1/4	7-3/8	43-1/16	26-1/4	15-3/4	6-13/16	10	21	11-9/16	1890
5-3/8	7-1/2	44-1/16	26-7/8	16-1/8	7	10-3/16	21-1/2	11-13/16	2020
5-1/2	7-11/16	45-1/8	27-1/2	16-1/2	7-1/8	10-7/16	22	12-1/8	2180
5-5/8	7-7/8	46-1/8	28-1/8	16-7/8	7-5/16	10-11/16	22-1/2	12-3/8	2323
5-3/4	8-1/16	47-1/8	28-3/4	17-1/4	7-1/2	10-15/16	23	12-5/8	2471
5-7/8	8-1/4	48-3/16	29-3/8	17-5/8	7-5/8	11-3/16	23-1/2	12-15/16	2653
6	8-3/8	49-3/16	30	18	7-13/16	11-3/8	24	13-3/16	2816

[1] Data provided by Vicinay International Co., Inc. Proof test is same as connecting chain. Breaking strengths are equivalent to A.B.S. Gr. 1, 2, or 3 chain. For markings and general notes, see Table 10.

Table 35. Fitting Details Swivels [1]

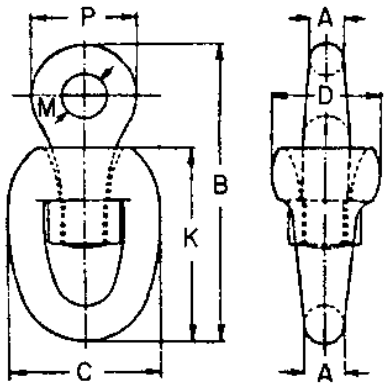

A = 1.2 d
B = 9.7d
C = 4.7d
D = 3.8d
K = 6.3d
M = 1.4d
P = 3.8d

DIMENSIONS IN INCHES

CHAIN SIZE (d)	A	B	C	D	K	M	P	WEIGHT (LBS.)
3/4	15/16	7-1/4	3-1/2	2-7/8	4-3/4	1-1/16	2-7/8	6.2
13/16	1	7-7/8	3-13/16	3-1/16	5-1/8	1-1/8	3-1/16	7.7
7/8	1-1/16	8-1/2	4-1/8	3-5/16	5-1/2	1-1/4	3-5/16	9.7
15/16	1-1/8	9-1/16	4-7/16	3-9/16	5-15/16	1-5/16	3-9/16	12.3
1	1-3/16	9-11/16	4-11/16	3-3/16	6-5/16	1-3/8	3-13/16	15.0
1-1/16	1-1/4	10-5/16	5	4-1/16	6-11/16	1-1/2	4-1/16	17.6
1-1/8	1-3/8	10-15/16	5-5/16	4-1/4	7-1/16	1-9/16	4-1/4	20.7
1-3/16	1-7/16	11-1/2	5-9/16	4-1/2	7-1/2	1-11/16	4-1/2	24.3
1-1/4	1-1/2	12-1/8	5-7/8	4-3/4	7-7/8	1-3/4	4-3/4	28.0
1-5/16	1-9/16	12-3/4	6-3/16	5	8-1/4	1-13/16	5	33.7
1-3/8	1-5/8	13-5/16	6-7/16	5-1/4	8-11/16	1-15/16	5-1/4	38.6
1-7/16	1-3/4	13-15/16	6-3/4	5-7/16	9-1/16	2	5-7/16	43.7
1-1/2	1-13/16	14-9/16	7-1/16	5-11/16	9-7/16	2-1/8	5-11/16	49.6
1-9/16	1-7/8	15-3/16	7-3/8	5-15/16	9-7/8	2-3/16	5-15/16	55.1
1-5/8	1-15/16	15-3/4	7-5/8	6-3/16	10-1/4	2-1/4	6-3/16	63.9
1-11/16	2	16-3/8	7-15/16	6-7/16	10-5/8	2-3/8	6-7/16	71.7
1-3/4	2-1/8	17	8-1/4	6-5/8	11	2-7/16	6-5/8	79.4
1-13/16	2-3/16	17-9/16	8-1/2	6-7/8	11-7/16	2-9/16	6-7/8	87.1
1-7/8	2-1/4	18-3/16	8-13/16	7-1/8	11-13/16	2-5/8	7-1/8	95.9
1-15/16	2-5/16	18-13/16	9-1/8	7-3/8	12-3/16	2-11/16	7-3/8	105.8
2	2-3/8	19-3/8	9-3/8	7-5/8	12-5/8	2-13/16	7-5/8	119.0
2-1/16	2-1/2	20	9-11/16	7-13/16	13	2-7/8	7-13/16	130.1
2-1/8	2-9/16	20-5/8	10	8-1/16	13-3/8	3	8-1/16	141.1
2-3/16	2-5/8	21-1/4	10-3/16	8-5/16	13-13/16	3-1/16	8-5/16	153.2
2-1/4	2-11/16	21-13/16	10-9/16	8-9/16	14-3/16	3-1/8	8-9/16	166.4
2-5/16	2-3/4	22-7/16	10-7/8	8-13/16	14-9/16	3-1/4	8-13/16	179.7
2-3/8	2-7/8	23-1/16	11-3/16	9	14-15/16	3-5/16	9	198.4
2-7/16	2-15/16	23-5/8	11-7/16	9-1/4	15-3/8	3-7/16	9-1/4	214
2-1/2	3	24-1/4	11-3/4	9-1/2	15-3/4	3-1/2	9-1/2	230
2-9/16	3-1/16	24-7/8	12-1/16	9-3/4	16-1/8	3-9/16	9-3/4	247
2-5/8	3-1/8	25-7/16	12-5/16	10	16-9/16	3-11/16	10	269
2-11/16	3-1/4	26-1/16	12-5/8	10-3/16	16-15/16	3-3/4	10-3/16	282
2-3/4	3-5/16	26-11/16	12-15/16	10-7/16	17-5/16	3-7/8	10-7/16	302
2-13/16	3-3/8	27-5/16	13-1/4	10-11/16	17-3/4	3-15/16	10-11/16	328
2-7/8	3-7/16	27-7/8	13-1/2	10-15/16	18-1/8	4	10-15/16	351

[1] Data provided by Vicinay International Co., Inc. Proof test is same as connecting chain. Breaking strengths are equivalent to A.B.S. Gr. 1, 2, or 3 chain. For markings and general notes, see Table 10. Similar swivels that are stocked for use in the standard free-swinging, fleet-type moorings have different dimensions and strengths.

Table 35. Fitting Details Swivels [1] (Continued)

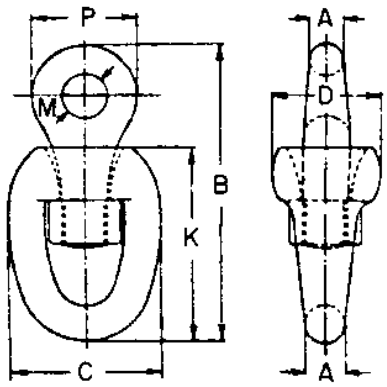

A = 1.2 d
B = 9.7 d
C = 4.7 d
D = 3.8 d
K = 6.3 d
M = 1.4 d
P = 3.8 d

DIMENSIONS IN INCHES

CHAIN SIZE	A	B	C	D	K	M	P	WEIGHT (LBS.)
2-15/16	3-1/2	28-1/2	13-13/16	11-3/16	18-1/2	4-1/8	11-3/16	373
3	3-5/8	29-1/8	14-1/8	11-3/8	18-7/8	4-3/16	11-3/8	395
3-1/16	3-11/16	29-11/16	14-3/8	11-5/8	19-5/16	4-5/16	11-5/8	419
3-1/8	3-3/4	30-5/16	14-11/16	11-7/8	19-11/16	4-3/8	11-7/8	452
3-3/16	3-13/16	30-15/16	15	12-1/8	20-1/16	4-7/16	12-1/8	478
3-1/4	3-7/8	31-1/2	15-1/4	12-3/8	20-1/2	4-9/16	12-3/8	505
3-5/16	4	32-1/8	15-9/16	12-9/16	20-7/8	4-5/8	12-9/16	534
3-3/8	4-1/16	32-3/4	15-7/8	12-13/16	21-1/4	4-3/4	12-13/16	571
3-7/16	4-1/8	33-3/8	16-1/8	13-1/16	21-11/16	4-13/16	13-1/16	602
3-1/2	4-3/16	33-15/16	16-7/16	13-5/16	22-1/16	4-7/8	13-5/16	633
3-9/16	4-1/4	34-9/16	16-3/4	13-9/16	22-7/16	5	13-9/16	666
3-5/8	4-3/8	35-3/16	17-1/16	13-3/4	22-13/16	5-1/16	13-3/4	699
3-11/16	4-7/16	35-3/4	17-5/16	14	23-1/4	5-3/16	14	734
3-3/4	4-1/2	36-3/8	17-5/8	14-1/4	23-5/8	5-1/4	14-1/4	769
3-13/16	4-9/16	37	17-15/16	14-1/2	24	5-5/16	14-1/2	820
3-7/8	4-5/8	37-9/16	18-3/16	14-3/4	24-7/16	5-7/16	14-3/4	856
3-15/16	4-3/4	38-3/16	18-1/2	14-15/16	24-13/16	5-1/2	14-15/16	897
4	4-13/16	38-13/16	18-13/16	15-3/16	25-3/16	5-5/8	15-3/16	939
4-1/8	4-15/16	40	19-3/8	15-11/16	26	5-3/4	15-11/16	1083
4-1/4	5-1/8	41-1/4	20	16-1/8	26-3/4	5-15/16	16-1/8	1131
4-3/8	5-1/4	42-7/16	20-9/16	16-5/8	27-9/16	6-1/8	16-5/8	1228
4-1/2	5-3/8	43-5/8	21-1/8	17-1/8	28-3/8	6-5/16	17-1/8	1347
4-5/8	5-9/16	44-7/8	21-3/4	17-9/16	29-1/8	6-1/2	17-9/16	1455
4-3/4	5-11/16	46-1/16	22-5/16	18-1/16	29-15/16	6-5/8	18-1/16	1570
4-7/8	5-7/8	47-5/16	22-15/16	18-1/2	30-11/16	6-13/16	18-1/2	1711
5	6	48-1/2	23-1/2	19	31-1/2	7	19	1839
5-1/8	6-1/8	49-11/16	24-1/16	19-1/2	32-5/16	7-3/16	19-1/2	1971
5-1/4	6-5/16	50-15/16	24-11/16	19-15/16	33-1/16	7-3/8	19-15/16	2136
5-3/8	6-7/16	52-1/8	25-1/4	20-7/16	33-7/8	7-1/2	20-7/16	2283
5-1/2	6-5/8	53-3/8	25-7/8	20-7/8	34-5/8	7-11/16	20-7/8	2463
5-5/8	6-3/4	54-9/16	26-7/16	21-3/8	35-7/16	7-7/8	21-3/8	2623
5-3/4	6-7/8	55-3/4	27	21-7/8	36-1/4	8-1/16	21-7/8	2793
5-7/8	7-1/16	57	27-5/8	22-5/16	37	8-1/4	22-5/16	2998
6	7-3/16	58-3/16	28-3/16	22-13/16	37-13/16	8-3/8	22-13/16	3181

[1] Data provided by Vicinay International Co., Inc. Proof test is same as connecting chain. Breaking strengths are equivalent to A.B.S. Gr. 1, 2, or 3 chain. For markings and general notes, see Table 10. Similar swivels that are stocked for use in the standard free-swinging, fleet-type moorings have different dimensions and strengths.

Table 36. Fitting Details Swivels [1]

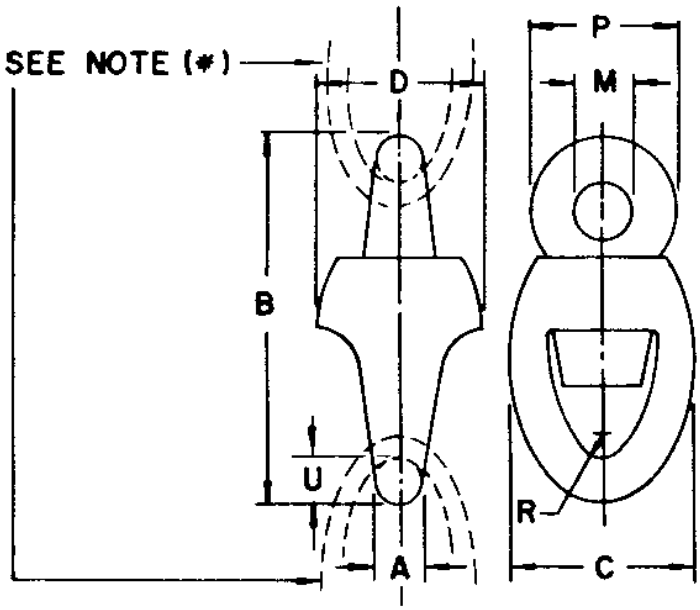

DIMENSIONS IN INCHES										TEST REQUIREMENTS	
CHAIN SIZE	A	B	C	D	M	P	R	U	WEIGHT (LBS.)	PROOF TEST (LBS.)	BREAK TEST (LBS.)
11/16 -3/4	3/4	6-25/32	3	3	1-1/16	2-9/16	3/4	3/4	5	48,000	75,000
13/16 -7/8	7/8	7-13/16	3-1/2	3-1/2	1-3/16	2-15/16	7/8	7/8	7	64,000	98,000
15/16 -1-1/8	1	10-3/16	4	4	1-3/4	3-11/16	1	1-3/16	14	106,000	161,000
1-3/16 -1-1/2	1-1/2	14-1/4	7-3/8	6-3/4	2-1/2	5-1/2	1-1/8	1-1/2	47	185,000	280,000
1-9/16 -1-7/8	2	15-15/16	7-7/8	7-7/8	2-5/8	6-3/8	1-1/4	2	78	285,000	432,000
1-15/16-2-3/16	2-1/4	19-1/8	9-7/16	9-7/16	3-1/8	7-5/8	1-3/8	2-1/4	126	382,000	579,000
2-1/4 -2-3/8	2-3/8	21-11/16	10-13/32	9-1/4	4	8-3/4	1-1/2	2-7/16	172	447,000	675,000
*2-7/16 -2-5/8	3-3/16	23-1/8	12-5/16	8-7/16	3-5/16	9-1/16	1-3/4	3-3/16	527	540,000	813,000
*2-11/16-2-7/8	3-7/16	25-5/16	13-1/2	9-3/16	3-5/8	9-15/16	1-15/16	3-7/16	590	640,000	965,000
*2-15/16-3-1/8	3-3/4	27-1/2	14-11/16	10	3-15/16	10-13/16	2-1/8	3-3/4	656	748,000	1,128,000
*3-3/16 -3-3/8	4-1/16	29-3/4	15-13/16	10-3/4	4-1/4	11-11/16	2-1/4	4-1/16	722	862,200	1,296,000
*3-7/16 -3-5/8	4-3/8	31-15/16	17-1/16	11-5/8	4-9/16	12-9/16	2-7/16	4-3/8	798	1,021,000	1,566,000
*3-11/16-3-7/8	4-11/16	34-1/8	18-1/4	12-7/16	4-7/8	13-3/8	2-5/8	4-11/16	884	1,205,000	1,863,000
*3-15/16-4	4-13/16	35-1/4	18-13/16	12-7/8	5	13-13/16	2-3/4	4-13/16	938	1,298,000	1,996,000

*MANUFACTURED WITH ONE COMMON LINK EACH END. WEIGHTS GIVEN INCLUDE WEIGHT OF TWO COMMON LINKS.

[1] Data provided by Baldt, Inc. For markings and general notes, see Table 10. Similar swivels that are stocked for use in the standard free-swinging, fleet-type moorings have different dimensions and strengths.

Table 37. Fitting Details Swivel Shackles [1]

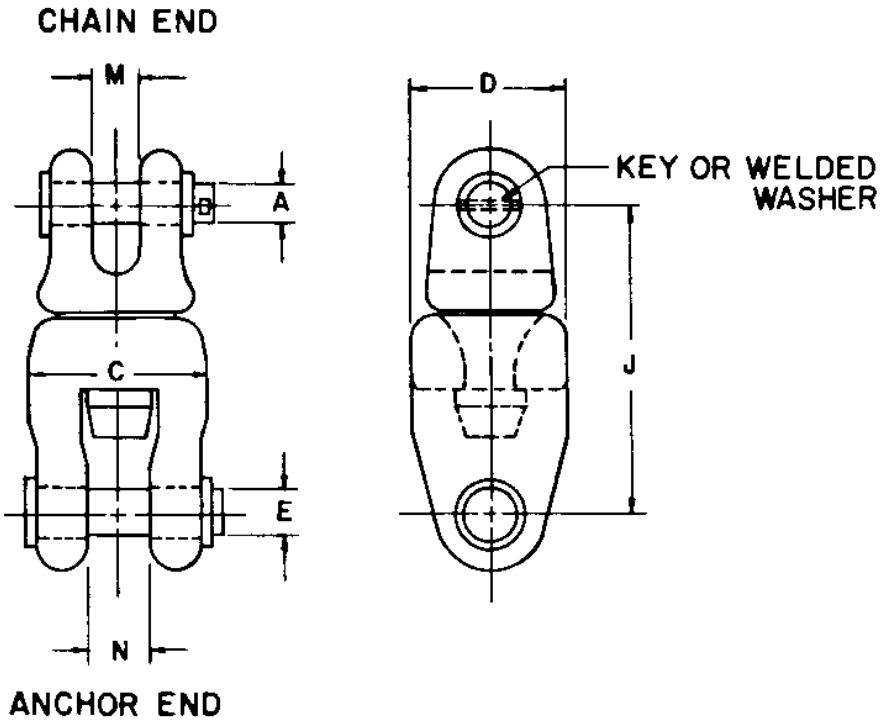

CHAIN SIZE (IN.)	ANCHOR SIZE (LBS.)	DIMENSIONS IN INCHES A	C	D	E	J	M	N	TEST REQUIREMENTS PROOF LOAD (LBS.)	BREAK LOAD (LBS.)	WEIGHT (LBS.)
2	20,000 LWT	2-5/8	16-1/2	15	4-1/2	31-3/4	2-3/8	7-1/4	318,000	454,000	1600
2	9,000 STOCK.	2-5/8	15-1/2	15-1/2	3-1/2	31-3/4	2-3/8	5-1/2	318,000	454,000	1700
2-1/8	15,000 LWT	3	16-1/2	16-1/2	5-7/8	30	3-3/4	7-1/4	357,000	538,000	1700
2-1/4	18,000 STOCK.	2-7/8	16-1/2	15	4-1/2	31-3/4	2-7/8	6-3/4	396,000	570,000	1600
2-5/8	12,150 SNUG ST.	3	16-1/2	15	4	31-3/4	3	5-1/4	530,000	758,000	1600
2-3/4	50,000 MOORF.	3-1/2	19	21-1/2	5-1/2	30	3-1/2	10	500,000	1,800,000	1200
2-3/4	2-1/4"WIRE THIMBLE	3-3/8	12-3/16	11-13/16	4-1/8	25-3/8	3-3/8	4	590,000	885,000	850
3	30,000 LWT	3-5/8	29	21-1/2	7-1/2	30-1/4	6	10	500,000	1,800,000	1200
3	30,000 LWT	3-5/8	19	21-1/2	5	30-1/4	6	8-1/8	500,000	1,800,000	1200
3-1/4	30,000 MOORF.	4	19	21-1/2	5-1/2	30-1/4	4-1/4	10	500,000	1,800,000	1200

[1] Data provided by Baldt, Inc. For markings and general notes, see Table 10.

Table 38. Fitting Details Swivel Shackles [1]

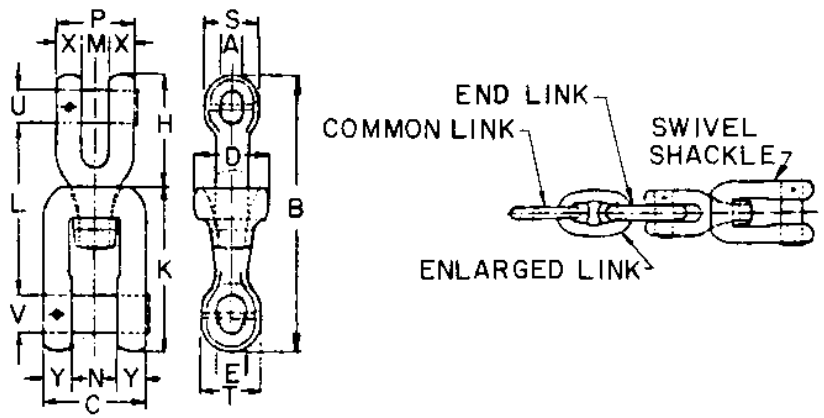

A = 1.2 d
B = 13.8 d
C = 5.0 d
D = 3.8 d
E = 1.3 d
H = 5.15 d
K = 8.65 d
L = 8.55 d
M = 1.4 d
N = 2.2 d
P = 4.0 d
S = 2.8 d
T = 3.4 d
U = 1.6 d
V = 1.9 d
X = 1.3 d
Y = 1.4 d

DIMENSIONS IN INCHES

CHAIN SIZE(d)	A	B	C	D	E	H	K	L	M	N	P	S	T	U	V	X	Y	WEIGHT (LBS.)
3/4	15/16	10-3/8	3-3/4	2-7/8	1	3-7/8	6-1/2	6-7/16	1-1/16	1-5/8	3	2-1/8	2-9/16	1-3/16	1-7/16	1	1-1/16	12.1
13/16	1	11-3/16	4-1/16	3-1/16	1-1/16	4-3/16	7	6-15/16	1-1/8	1-13/16	3-1/4	2-1/4	2-3/4	1-5/16	1-9/16	1-1/16	1-1/8	14.3
7/8	1-1/16	12-1/16	4-3/8	3-5/16	1-1/8	4-1/2	7-9/16	7-1/2	1-1/4	1-15/16	3-1/2	2-7/16	3	1-3/8	1-11/16	1-1/8	1-1/4	17.6
15/16	1-1/8	12-15/16	4-11/16	3-9/16	1-1/4	4-13/16	8-1/8	8	1-5/16	2-1/16	3-3/4	2-5/8	3-3/16	1-1/2	1-13/16	1-1/4	1-5/16	23.1
1	1-3/16	13-13/16	5	3-13/16	1-5/16	5-1/8	8-5/8	8-9/16	1-3/8	2-3/16	4	2-13/16	3-5/8	1-5/8	1-7/8	1-5/16	1-3/8	27.6
1-1/16	1-1/4	14-11/16	5-5/16	4-1/16	1-3/8	5-1/2	9-3/16	9-1/16	1-1/2	2-5/16	4-1/4	3	3-5/8	1-11/16	2	1-3/8	1-1/2	33.1
1-1/8	1-3/8	15-1/2	5-5/8	4-1/4	1-7/16	5-13/16	9-3/4	9-5/8	1-9/16	2-1/2	4-1/2	3-1/8	3-13/16	1-13/16	2-1/8	1-7/16	1-9/16	38.6
1-3/16	1-7/16	16-3/8	5-15/16	4-1/2	1-9/16	6-1/8	10-1/4	10-1/8	1-11/16	2-5/8	4-3/4	3-5/16	4-1/16	1-15/16	2-1/4	1-9/16	1-11/16	45.2
1-1/4	1-1/2	17-1/4	6-1/4	4-3/4	1-5/8	6-7/16	10-13/16	10-11/16	1-3/4	2-3/4	5	3-1/2	4-1/4	2	2-3/8	1-5/8	1-3/4	52.9
1-5/16	1-9/16	18-1/8	6-9/16	5	1-11/16	6-3/4	11-3/8	11-1/4	1-13/16	2-7/8	5-1/4	3-11/16	4-7/16	2-1/8	2-1/2	1-11/16	1-13/16	62.8
1-3/8	1-5/8	19	6-7/8	5-1/4	1-13/16	7-1/16	11-7/8	11-3/4	1-15/16	3	5-1/2	3-7/8	4-11/16	2-3/16	2-5/8	1-13/16	1-15/16	71.6
1-7/16	1-3/4	19-13/16	6-3/16	5-7/16	1-7/8	7-3/8	12-7/16	12-5/16	2	3-3/16	5-3/4	4	4-7/8	2-5/16	2-3/4	1-7/8	2	81.6
1-1/2	1-13/16	20-11/16	7-1/2	5-11/16	1-15/16	7-3/4	13	12-13/16	2-1/8	3-5/16	6	4-3/16	5-1/8	2-3/8	2-7/8	1-15/16	2-1/8	91.5
1-9/16	1-7/8	21-9/16	7-13/16	5-15/16	2-1/16	8-1/16	13-1/2	13-3/8	2-3/16	3-7/16	6-1/4	4-3/8	5-5/16	2-1/2	3	2-1/16	2-3/16	103.6
1-5/8	1-15/16	22-7/16	8-1/8	6-3/16	2-1/8	8-3/8	14-1/16	13-7/8	2-1/4	3-9/16	6-1/2	4-9/16	5-1/2	2-5/8	3-1/16	2-1/8	2-1/4	120.1
1-11/16	2	23-5/16	8-7/16	6-7/16	2-3/16	8-11/16	14-5/8	14-7/16	2-3/8	3-11/16	6-3/4	4-3/4	5-3/4	2-11/16	3-3/16	2-3/16	2-3/8	133.4
1-3/4	2-1/8	24-1/8	8-3/4	6-5/8	2-1/4	9	15-1/8	14-15/16	2-7/16	3-7/8	7	4-7/8	5-15/16	2-13/16	3-5/16	2-1/4	2-7/16	147.7
1-13/16	2-3/16	25	9-1/16	6-7/8	2-3/8	9-5/16	15-11/16	15-1/2	2-9/16	4	7-1/4	5-1/16	6-3/16	2-7/8	3-7/16	2-3/8	2-9/16	163.1
1-7/8	2-1/4	25-7/8	9-3/8	7-1/8	2-7/16	9-11/16	16-1/4	16-1/16	2-5/8	4-1/8	7-1/2	5-1/4	6-3/8	3	3-9/16	2-7/16	2-5/8	179.7
1-15/16	2-5/16	26-3/4	9-11/16	7-3/8	2-1/2	10	16-3/4	16-9/16	2-11/16	4-1/4	7-3/4	5-7/16	6-9/16	3-1/8	3-11/16	2-1/2	2-11/16	197.3

[1] Data provided by Vicinay International Co., Inc. Proof test is same as connecting chain. Breaking strengths are equivalent to A.B.S. Gr. 1, 2, or 3 chain. For markings and general notes, see Table 10.

Table 38. Fitting Details Swivel Shackles [1] (Continued)

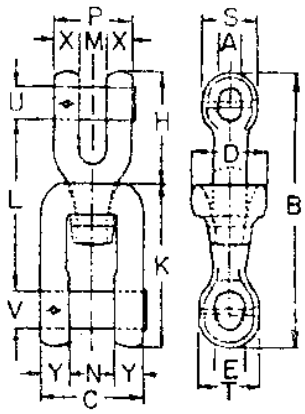

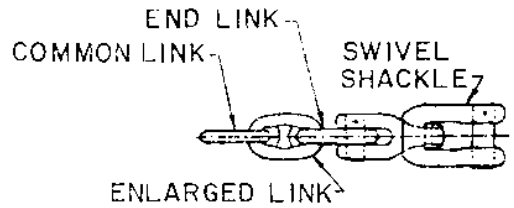

A = 1.2 d
B = 13.8 d
C = 5.0 d
D = 3.8 d
E = 1.3 d
H = 5.15 d
K = 8.65 d
L = 8.55 d
M = 1.4 d
N = 2.2 d
P = 4.0 d
S = 2.8 d
T = 3.4 d
U = 1.6 d
V = 1.9 d
X = 1.3 d
Y = 1.4 d

DIMENSIONS IN INCHES

CHAIN SIZE(d)	A	B	C	D	E	H	K	L	M	N	P	S	T	U	V	X	Y	WEIGHT (LBS.)
2	2-3/8	27-5/8	10	7-5/8	2-5/8	10-5/16	17-5/16	17-1/8	2-13/16	4-3/8	8	5-5/8	6-13/16	3-3/16	3-13/16	2-5/8	2-13/16	223
2-1/16	2-1/2	28-7/16	10-5/16	7-13/16	2-11/16	10-5/8	17-13/16	17-5/8	2-7/8	4-9/16	8-1/4	5-3/4	7	3-5/16	3-15/16	2-11/16	2-7/8	243
2-1/8	2-9/16	29-5/16	10-5/8	8-1/16	2-3/4	10-15/16	18-3/8	18-3/16	3	4-11/16	8-1/2	5-15/16	7-3/16	3-3/8	4-1/16	2-3/4	3	265
2-3/16	2-5/8	30-3/16	10-15/16	8-5/16	2-7/8	11-1/4	18-15/16	18-11/16	3-1/16	4-13/16	8-3/4	6-1/6	7-7/16	3-1/2	4-3/16	2-7/8	3-1/16	287
2-1/4	2-11/16	31-1/16	11-1/4	8-9/16	2-15/16	11-9/16	19-7/16	19-1/4	3-1/8	4-15/16	9	6-5/16	7-5/8	3-5/8	4-1/4	2-15/16	3-1/8	311
2-5/16	2-3/4	31-15/16	11-9/16	8-13/16	3	11-15/16	20	19-3/4	3-1/4	5-1/16	9-1/4	6-1/2	7-7/8	3-11/16	4-3/8	3	3-1/4	335
2-3/8	2-7/8	32-3/4	11-7/8	9	3-1/16	12-1/4	20-9/16	20-5/16	3-5/16	5-1/4	9-1/2	6-5/8	8-1/16	3-13/16	4-1/2	3-1/16	3-5/16	370
2-7/16	2-15/16	33-5/8	12-3/16	9-1/4	3-3/16	12-9/16	21-1/16	20-13/16	3-7/16	5-3/8	9-3/4	6-13/16	8-5/16	3-7/8	4-5/8	3-3/16	3-7/16	399
2-1/2	3	34-1/2	12-1/2	9-1/2	3-1/4	12-7/8	21-5/8	21-3/8	3-1/2	5-1/2	10	7	8-1/2	4	4-3/4	3-1/4	3-1/2	430
2-9/16	3-1/16	35-5/8	12-13/16	9-3/4	3-5/16	13-3/16	22-3/16	21-15/16	3-9/16	5-5/8	10-1/4	7-3/16	8-11/16	4-1/8	4-7/8	3-5/16	3-9/16	461
2-5/8	3-1/8	36-1/4	13-1/8	10	3-7/16	13-1/2	22-11/16	22-7/16	3-11/16	5-3/4	10-1/2	7-3/8	8-15/16	4-3/16	5	3-7/16	3-11/16	494
2-11/16	3-1/4	37-1/16	13-7/16	10-3/16	3-1/2	13-13/16	23-1/4	23	3-3/4	5-15/16	10-3/4	7-1/2	9-1/8	4-5/16	5-1/8	3-1/2	3-3/4	527
2-3/4	3-5/16	37-15/16	13-3/4	10-7/16	3-9/16	14-3/16	23-13/16	23-1/2	3-7/8	6-1/16	11	7-11/16	9-3/8	4-3/8	5-1/4	3-9/16	3-7/8	562
2-13/16	3-3/8	38-13/16	14-1/16	10-11/16	3-11/16	14-1/2	24-5/16	24-1/16	3-15/16	6-3/16	11-1/4	7-7/8	9-9/16	4-1/2	5-3/8	3-11/16	3-15/16	613
2-7/8	3-7/16	39-11/16	14-3/8	10-15/16	3-3/4	14-13/16	24-7/8	24-9/16	4	6-5/16	11-1/2	8-1/16	9-3/4	4-5/8	5-7/16	3-3/4	4	653

[1] Data provided by Vicinay International Co., Inc. Proof test is same as connecting chain. Breaking strengths are equivalent to A.B.S. Gr. 1, 2, or 3 chain. For markings and general notes, see Table 10.

Table 38. Fitting Details Swivel Shackles [1] (Continued)

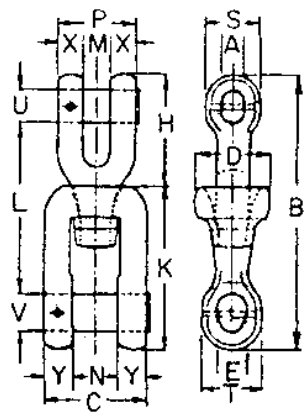

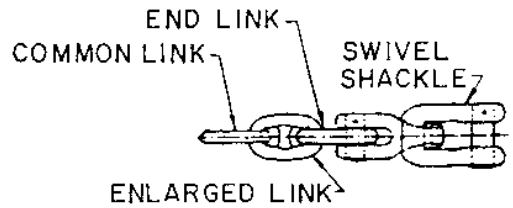

A = 1.2 d
B = 13.8 d
C = 5.0 d
D = 3.8 d
E = 1.3 d
H = 5.15 d
K = 8.65 d
L = 8.55 d
M = 1.4 d
N = 2.2 d
P = 4.0 d
S = 2.8 d
T = 3.4 d
U = 1.6 d
V = 1.9 d
X = 1.3 d
Y = 1.4 d

DIMENSIONS IN INCHES

CHAIN SIZE(d)	A	B	C	D	E	H	K	L	M	N	P	S	T	U	V	X	Y	WEIGHT (LBS.)
2-15/16	3-1/2	40-9/16	14-11/16	11-3/16	3-13/16	15-1/8	25-7/16	25-1/8	4-1/8	6-7/16	11-3/4	8-1/4	10	4-11/16	5-9/16	3-13/16	4-1/8	692
3	3-5/8	41-3/8	15	11-3/8	3-7/8	15-7/16	25-15/16	25-5/8	4-3/16	6-5/8	12	8-3/8	10-3/16	4-13/16	5-11/16	3-7/8	4-3/16	736
3-1/16	3-11/16	42-1/4	15-5/16	11-5/8	4	15-3/4	26-1/2	26-3/16	4-5/16	6-3/4	12-1/4	8-9/16	10-7/16	4-7/8	5-13/16	4	4-5/16	780
3-1/8	3-3/4	43-1/8	15-5/8	11-7/8	4-1/16	16-1/8	27-1/16	26-3/4	4-3/8	6-7/8	12-1/2	8-3/4	10-5/8	5	5-15/16	4-1/16	4-3/8	842
3-3/16	3-13/16	44	15-15/16	12-1/8	4-1/8	16-7/16	27-9/16	27-1/4	4-7/16	7	12-3/4	8-15/16	10-13/16	5-1/8	6-1/16	4-1/8	4-7/16	891
3-1/4	3-7/8	44-7/8	16-1/4	12-3/8	4-3/4	16-3/4	28-1/8	27-13/16	4-9/16	7-1/8	13	9-1/8	11-1/16	5-3/16	6-3/16	4-1/4	4-9/16	941
3-5/16	4	45-11/16	16-9/16	12-9/16	4-5/16	17-1/16	28-5/8	28-5/16	4-5/8	7-5/16	13-1/4	9-1/4	11-1/4	5-5/16	6-5/16	4-5/16	4-5/8	994
3-3/8	4-1/16	46-9/16	16-7/8	12-13/16	4-3/8	17-3/8	29-3/16	28-7/8	4-3/4	7-7/16	13-1/2	9-7/16	11-1/2	5-3/8	6-7/16	4-3/8	4-3/4	1067
3-7/16	4-1/8	47-7/16	17-3/16	13-1/16	4-1/2	17-11/16	29-3/4	29-3/8	4-13/16	7-9/16	13-3/4	9-5/8	11-11/16	5-1/2	6-9/16	4-1/2	4-13/16	1122
3-1/2	4-3/16	48-5/16	17-1/2	13-5/16	4-9/16	18	30-1/4	29-15/16	4-7/8	7-11/16	14	9-13/16	11-7/8	5-5/8	6-5/8	4-9/16	4-7/8	1182
3-9/16	4-1/4	49-3/16	17-13/16	13-9/16	4-5/8	18-3/8	30-13/16	30-7/16	5	7-13/16	14-1/4	10	12-1/8	5-11/16	6-3/4	4-5/8	5	1241
3-5/8	4-3/8	50	18-1/8	13-3/4	4-11/16	18-11/16	31-3/8	31	5-1/16	8	14-1/2	10-1/8	12-5/16	5-13/16	6-7/8	4-11/16	5-1/16	1305
3-11/16	4-7/16	50-7/8	18-7/16	14	4-13/16	19	31-7/8	31-1/2	5-3/16	8-1/8	14-3/4	10-5/16	12-9/16	5-7/8	7	4-13/16	5-3/16	1369
3-3/4	4-1/2	51-3/4	18-3/4	14-1/4	4-7/8	19-5/16	32-7/16	32-1/16	5-1/4	8-1/4	15	10-1/2	12-3/4	6	7-1/8	4-7/8	5-1/4	1437
3-13/16	4-9/16	52-5/8	19-1/16	14-1/2	4-15/16	19-5/8	33	32-5/8	5-5/16	8-3/8	15-1/4	10-11/16	12-15/16	6-1/8	7-1/4	4-15/16	5-5/16	1530
3-7/8	4-5/8	53-1/2	19-3/8	14-3/4	5-1/16	19-15/16	33-1/2	33-1/8	5-7/16	8-1/2	15-1/2	10-7/8	13-3/16	6-3/16	7-3/8	5-1/16	5-7/16	1601
3-15/16	4-3/4	54-5/16	19-11/16	14-15/16	5-1/8	20-1/4	34-1/16	33-11/16	5-1/2	8-11/16	15-3/4	11	13-3/8	6-5/16	7-1/2	5 1/8	5-1/2	1675

[1] Data provided by Vicinay International Co., Inc. Proof test is same as connecting chain. Breaking strengths are equivalent to A.B.S. Gr. 1, 2, or 3 chain. For markings and general notes, see Table 10.

Table 38. Fitting Details Swivel Shackles [1] (Continued)

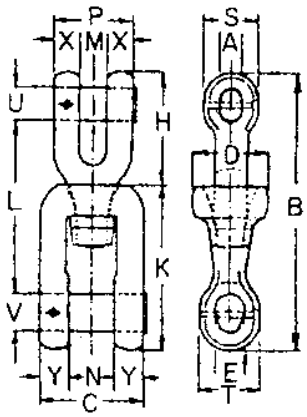

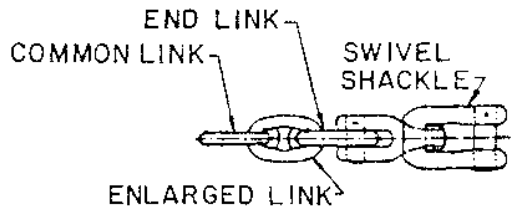

A = 1.2 d
B = 13.8 d
C = 5.0 d
D = 3.8 d
E = 1.3 d
H = 5.15 d
K = 8.65 d
L = 8.55 d
M = 1.4 d
N = 2.2 d
P = 4.0 d
S = 2.8 d
T = 3.4 d
U = 1.6 d
V = 1.9 d
X = 1.3 d
Y = 1.4 d

DIMENSIONS IN INCHES

CHAIN SIZE(d)	A	B	C	D	E	H	K	L	M	N	P	S	T	U	V	X	Y	WEIGHT (LBS.)
4	4-13/16	55-3/16	20	15-3/16	5-3/16	20-5/8	34-5/8	34-3/16	5-5/8	8-13/16	16	11-3/16	13-5/8	6-3/8	7-5/8	5-3/16	5-5/8	1753
4-1/8	4-15/16	56-15/16	20-5/8	15-11/16	5-3/8	21-1/4	35-11/16	35-1/4	5-3/4	9-1/16	16-1/2	11-9/16	14	6-5/8	7-13/16	5-3/8	5-3/4	1940
4-1/4	5-1/8	58-5/8	21-1/4	16-1/8	5-1/2	21-7/8	36-3/4	36-5/16	5-15/16	9-3/8	17	11-7/8	14-7/16	6-13/16	8-1/16	5-1/2	5-15/16	2112
4-3/8	5-1/4	60-3/8	21-7/8	16-5/8	5-11/16	22-9/16	37-7/8	37-7/16	6-1/8	9-5/8	17-1/2	12-1/4	14-7/8	7	8-5/16	5-11/16	6-1/8	2293
4-1/2	5-3/8	62-1/8	22-1/2	17-1/8	5-7/8	23-3/16	38-15/16	38-1/2	6-5/16	9-7/8	18	12-5/8	15-5/16	7-3/16	8-9/16	5-7/8	6-5/16	2513
4-5/8	5-9/16	63-13/16	23-1/8	17-9/16	6	23-13/16	40	39-9/16	6-1/2	10-3/16	18-1/2	12-15/16	15-3/4	7-3/8	8-13/16	6	6-1/2	2718
4-3/4	5-11/16	65-9/16	23-3/4	18-1/16	6-3/16	24-7/16	41-1/16	40-5/8	6-5/8	10-7/16	19	13-5/16	16-1/8	7-5/8	9	6-3/16	6-5/8	2932
4-7/8	5-7/8	67-1/4	24-3/8	18-1/2	6-5/16	25-1/8	42-3/16	41-11/16	6-13/16	10-3/4	19-1/2	13-5/8	16-9/16	7-13/16	9-1/4	6-5/16	6-13/16	3194
5	6	69	25	19	6-1/2	25-3/4	43-1/4	42-3/4	7	11	20	14	17	8	9-1/2	6-1/2	7	3433
5-1/8	6-1/8	70-3/4	25-5/8	19-1/2	6-11/16	26-3/8	44-5/16	43-13/16	7-3/16	11-1/4	20-1/2	14-3/8	17-7/16	8-3/16	9-3/4	6-11/16	7-3/16	3682
5-1/4	6-5/16	72-7/16	26-1/4	19-15/16	6-13/16	27-1/16	45-7/16	44-7/8	7-3/8	11-9/16	21	14-11/16	17-7/8	8-3/8	10	6-13/16	7-3/8	3986
5-5/8	6-7/16	74-3/16	26-7/8	20-7/16	7	27-11/16	46-1/2	45-15/16	7-1/2	11-13/16	21-1/2	15-1/16	18-1/4	8-5/8	10-3/16	7	7-1/2	4262
5-1/2	6-5/8	75-7/8	27-1/2	20-7/8	7-1/8	28-5/16	47-9/16	47	7-11/16	12-1/8	22	15-3/8	18-11/16	8-13/16	10-7/16	7-1/8	7-11/16	4599
5-5/8	6-3/4	77-5/8	28-1/8	21-3/8	7-5/16	29	48-11/16	48-1/8	7-7/8	12-3/8	22-1/2	15-3/4	19-1/8	9	10-11/16	7-5/16	7-7/8	4899
5-3/4	6-7/8	79-3/8	28-5/4	21-7/8	7-1/2	29-5/8	49-3/4	49-5/16	8-1/16	12-5/8	23	16-1/8	19-9/16	9-3/16	10-15/16	7-1/2	8-1/16	5214
5-7/8	7-1/16	81-1/16	29-3/8	22-5/16	7-5/8	30-1/4	50-13/16	50-1/4	8-1/4	12-15/16	23-1/2	16-7/16	20	9-3/8	11-3/16	7-5/8	8-1/4	5600
6	7-3/16	82-13/16	30	22-13/16	7-13/16	30-7/8	51-7/8	51-5/16	8-3/8	13-3/16	24	16-13/16	20-5/8	9-5/8	11-3/8	7-13/16	8-3/8	5941

[1] Data provided by Vicinay International Co., Inc. Proof test is same as connecting chain. Breaking strengths are equivalent to A.B.S. Gr. 1, 2, or 3 chain. For markings and general notes, see Table 10.

Table 39. Fitting Details Regular and Jaw One End Swivels [1]

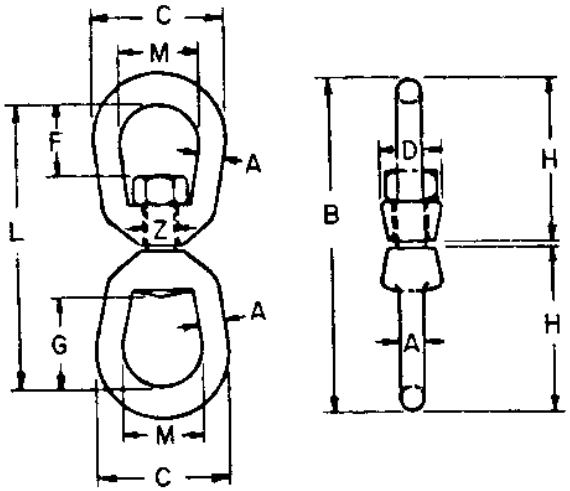

REGULAR TYPE

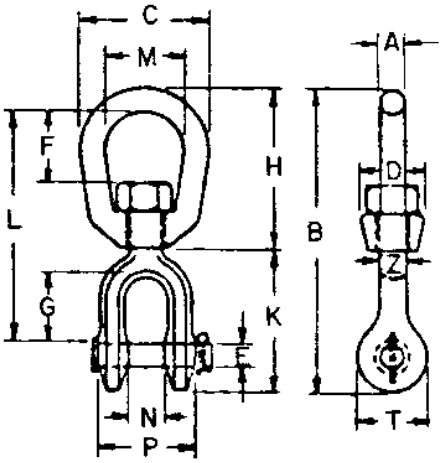

JAW ONE END TYPE

REGULAR TYPE

CHAIN SIZE A	B	C	D	F	G	H	L	M	Z	WEIGHT (LBS.)	BREAK TEST (LBS.)
	DIMENSIONS IN INCHES										
1/2	6.44	2.50	1.31	1.31	2.00	3.19	5.44	1.50	.63	1.25	18,000
5/8	7.81	3.00	1.50	1.56	2.38	3.88	6.56	1.75	.75	2.25	26,000
3/4	8.69	3.50	1.88	1.75	2.63	4.31	7.19	2.00	.88	3.5	36,000
7/8	10.13	4.00	2.13	2.06	3.06	5.00	8.38	2.25	1.00	5.4	50,000
1	11.63	4.50	2.38	2.31	3.50	5.75	9.63	2.50	1.13	8.8	62,500
1-1/8	12.63	5.00	2.56	2.38	3.75	6.25	10.38	2.75	1.25	12.0	76,000
1-1/4	13.63	5.63	3.00	2.69	3.69	6.75	11.13	3.13	1.38	16.0	90,000
1-1/2	20.13	7.00	4.00	4.19	4.19	10.00	17.13	4.00	2.25	49.0	226,000

JAW ONE END TYPE

CHAIN SIZE A	B	C	D	E	F	G	H	K	L	M	N	P	T	Z	WEIGHT (LBS.)	BREAK TEST (LBS.)
	DIMENSIONS IN INCHES															
1/2	6.06	2.50	1.31	.50	1.31	1.31	3.19	2.88	4.50	1.50	.75	1.75	1.31	.63	1.25	18,000
5/8	7.31	3.00	1.50	.63	1.56	1.50	3.88	3.44	5.31	1.75	.94	2.06	1.63	.75	2.13	26,000
3/4	8.31	3.50	1.88	.75	1.75	1.75	4.31	4.00	6.06	2.00	1.13	2.53	1.88	.88	3.5	36,000
7/8	9.53	4.00	2.13	.88	2.06	2.06	5.00	4.53	7.00	2.25	1.19	2.75	2.13	1.00	5.3	50,000
1	11.69	4.50	2.38	1.13	2.31	2.81	5.75	5.94	8.56	2.50	1.75	3.72	2.63	1.13	9.8	62,500
1-1/8	12.19	5.00	2.56	1.13	2.38	2.81	6.25	5.94	8.94	2.75	1.75	3.72	2.63	1.25	14.0	76,000
1-1/4	13.13	5.63	3.00	1.38	2.69	2.81	6.75	6.38	9.44	3.13	2.06	4.31	3.13	1.50	17.0	90,000
1-1/2	20.84	7.00	4.00	2.25	4.19	4.44	10.00	10.84	14.74	4.00	2.88	6.00	5.63	2.25	49.0	226,000

[1]Data provided by The Crosby Group. For markings and general notes, see Table 10.

Table 40. Fitting Details Chain Stopprs — Devil's Claw Type [1]

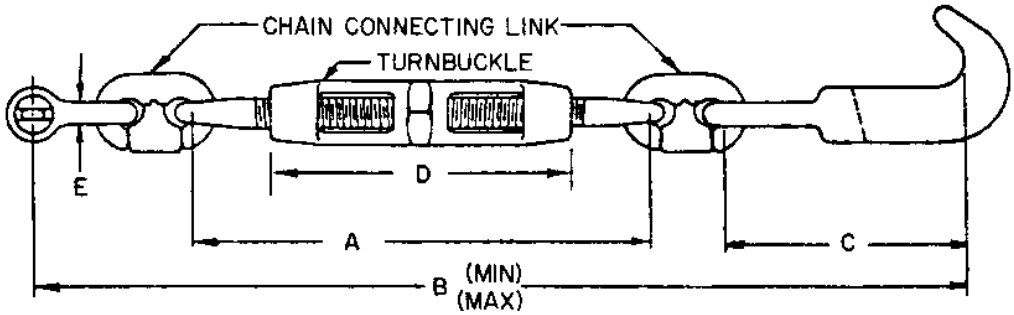

DIMENSIONS IN INCHES									TEST REQUIREMENTS	
CHAIN SIZE	A	B MIN.	B MAX.	C	D	E	LINK SIZE	WEIGHT (LBS.)	PROOF TEST (LBS.)	BREAK TEST (LBS.)
3/4 -3/4HS	16	35-1/2	42-3/4	10-1/2	11	7/8	3/4	30	67,500	91,100
7/8 -7/8HS	17-1/4	38-1/4	45-3/8	10-1/2	11	1	7/8	35	88,200	119,000
1-1 -1/8	19-1/2	43-1/16	51-11/16	10-1/2	13	1-1/8	1-1/8	70	145,000	195,000
1-1/4	19-5/8	44-3/16	52-13/16	10-1/2	13	1-1/4	1-1/4	75	178,200	240,600
1-1/4HS-1-1/2	23-3/4	50-1/4	60-3/4	10-1/2	16	1-1/2	1-3/8	125	211,500	285,500
1-3/8HS-1-5/8	23-3/4	50-1/4	60-3/4	10-1/2	16	1-1/2	1-3/8	125	211,500	285,500
1-5/8HS-2	24-1/8	53-1/8	63-5/8	12	16	1-1/2	1-1/2	130	252,000	340,200
2-1/8 -2-3/8	26-1/4	56-1/4	66-3/4	12-1/2	16	1-5/8	1-1/2	180	252,000	340,200
2-1/2 -2-5/8	29-3/4	65	78-1/8	16	20	1-7/8	1-5/8	350	292,500	395,000
2-3/4 -2-3/4HD	29-3/4	67-1/4	80-1/4	16	20	1-7/8	1-3/4	400	352,000	476,000
3HD -3-1/4	36	76-1/4	92-3/8	17-1/2	24	2-3/8	2-1/4	550	403,000	610,000
3-3/8 -3-1/2	38-3/8	86-1/2	102-1/4	19	24	2-5/8	2-1/2	700	492,000	744,000
3-1/2HD-3-3/4	44-3/8	98-5/8	116-3/4	20-1/2	27-1/2	2-7/8	3	900	706,000	1,068,000

HS - High Strength
HD - Heavy Duty

[1]Data provided by Baldt, Inc. For markings and general notes, see Table 10.

Table 41. Fitting Details Chain Stoppers — Pelican Hook Type [1]

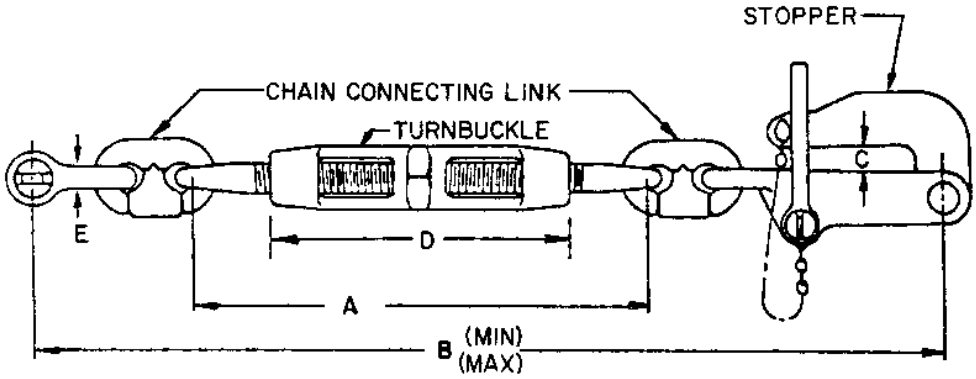

DIMENSIONS IN INCHES								TEST REQUIREMENTS	
CHAIN SIZE	A	B MIN.	B MAX.	C	D	E	LINK SIZE	WEIGHT (LBS.)	PROOF TEST (LBS.)	BREAK TEST (LBS.)
3/4	16	33-1/4	40-1/2	1	11	7/8	3/4	35	67,500	91,100
7/8	17-1/4	38-7/16	45-9/16	1-7/32	11	1	7/8	40	88,200	119,000
1 -1-1/8	19-1/2	46-7/8	55-1/2	1-17/32	13	1-1/8	1-1/8	75	145,000	195,000
1-1/4	19-5/8	48	56-5/8	1-17/32	13	1-1/4	1-1/4	82	178,200	240,600
1-1/4HS-1-1/2	23-3/4	55-3/16	65-11/16	1-3/4	16	1-1/2	1-3/8	135	211,500	285,500
1-3/8HS-1-5/8	23-3/4	55-3/16	65-11/16	2	16	1-1/2	1-3/8	135	211,500	285,500
1-5/8HS-2	24-1/8	59-3/16	69-11/16	2-7/16	16	1-1/2	1-1/2	140	252,000	340,200
2-1/8 -2-3/8	26-1/4	65-5/8	76-1/8	2-9/16	16	1-5/8	1-1/2	210	252,000	340,200
2-1/2 -2-5/8	29-3/4	74-3/8	87-1/2	3-1/8	20	1-7/8	1-5/8	370	292,500	395,000
2-3/4 -2-3/4HD	29-3/4	86-5/8	89-3/4	3-1/8	20	1-7/8	1-3/4	430	352,000	476,000
3HD -3-1/4	36	90-3/4	106-1/2	3-3/4	24	2-3/8	2-1/4	580	403,000	610,000
3-3/8 -3-1/2	38-5/8	97-7/16	113-3/16	3-7/8	24	2-5/8	2-1/2	766	492,000	744,000
3-1/2HD-3-3/4	44-3/8	110	128-1/8	4-1/2	27-1/2	2-7/8	3	960	706,000	1,068,000

[1]Data provided by Baldt, Inc. For markings and general notes, see Table 10.

Table 42. Fitting Details Chain Stoppers — Ulster Type [1]

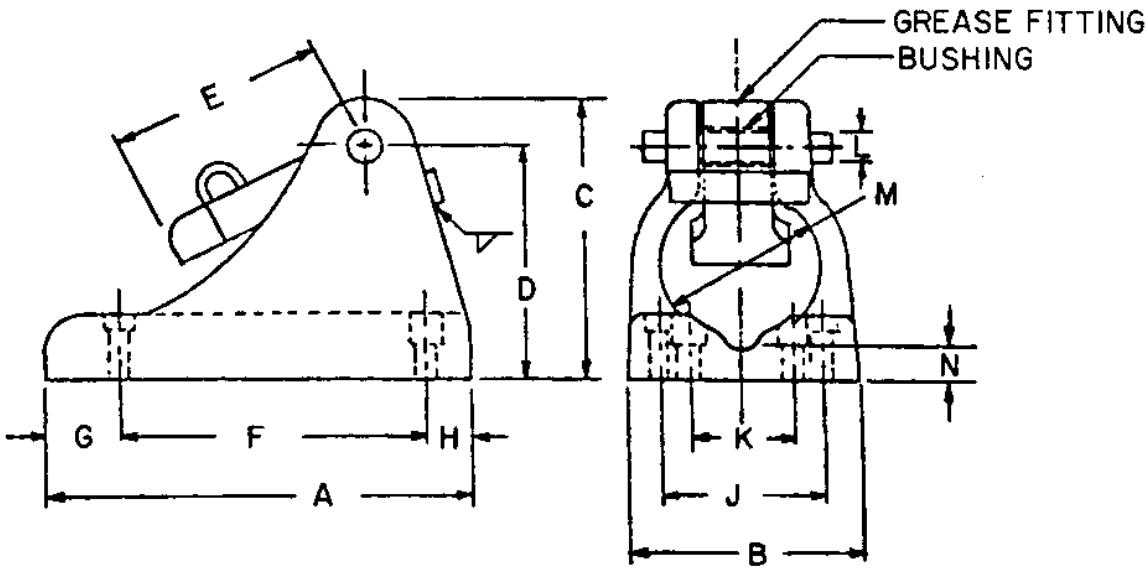

DIMENSIONS IN INCHES

CHAIN SIZE	A	B	C	D	E	F	G	H	J	K	L	M	N
1 -1-1/2	20	11	13-1/2	11-1/2	10-1/2	15	3-1/4	1-3/4	7-3/4	5	1-1/2	7-3/4	1-1/4
1-9/16 -1-7/8	25	14-1/4	17-1/8	14-1/2	14-1/4	18-3/4	4-1/8	2-1/8	10-1/8	6-1/4	2	9-3/4	1-1/2
1-15/16-2-3/16	30	18-1/8	22	18	16-1/4	20-1/2	6-3/8	3-1/8	11	8	2-3/8	12	2-1/4
2-1/4 -2-1/2	39	21-1/2	27-3/8	22-3/8	20-1/2	28-7/8	6-3/4	3-3/8	14-1/2	9-1/2	3-1/4	15	2-1/2
2-9/16 -2-13/16	42-7/8	24-3/4	30-1/2	24-1/4	22-1/4	31-1/4	7-1/4	4-3/8	15-5/8	10-1/4	4	16-1/4	2-11/16
2-7/8 -3-3/16	53-1/2	29-5/8	36-9/16	30-13/16	28-1/4	39-3/4	9-1/8	4-5/8	20	13	4	20-1/2	3-7/16
3-1/4 -3-7/16	46-3/4	27	34	26-7/16	24-3/8	34	8	4-3/4	17	11-1/4	4-3/8	17-3/4	3-1/4
3-1/2 -3-3/4	62-1/2	34-5/8	43-1/8	36-1/8	33-1/8	46-1/2	10-9/16	5-7/16	23-1/4	15-1/4	4-3/4	24	4
3-13/16-4	66-1/2	37	46	38-1/2	35-1/4	49-1/2	11-1/4	5-7/8	24-7/8	16-1/4	5-1/16	25-1/2	4-1/4
4-1/16 -4-1/4	70-3/4	39-1/4	49	41	37-1/2	52-1/2	12	6-1/4	26-3/8	17-1/4	5-1/2	30	4-1/2

CHAIN SIZE	APPROX. WEIGHT(LBS.)	TEST REQUIREMENTS PROOF TEST (LBS.)	TEST REQUIREMENTS BREAK TEST (LBS.)
1 -1-1/2	215	183,500	262,000
1-9/16 -1-7/8	470	281,000	408,000
1-15/16-2-3/16	1300	337,000	482,000
2-1/4 -2-1/2	1670	484,000	692,000
2-9/16 -2-13/16	2230	603,000	861,000
2-7/8 -3-3/16	4550	759,000	1,084,000
3-1/4 -3-7/16	3800	871,000	1,244,000
3-1/2 -3-3/4	4000	1,019,000	1,455,000
3-13/16-4	4500	1,143,000	1,632,000
4-1/16 -4-1/4	4700	1,272,000	1,817,000

[1] Data provided by Baldt, Inc. For markings and general notes, see Table 10.

Table 43. Fitting Details Quick Release Hook [1]

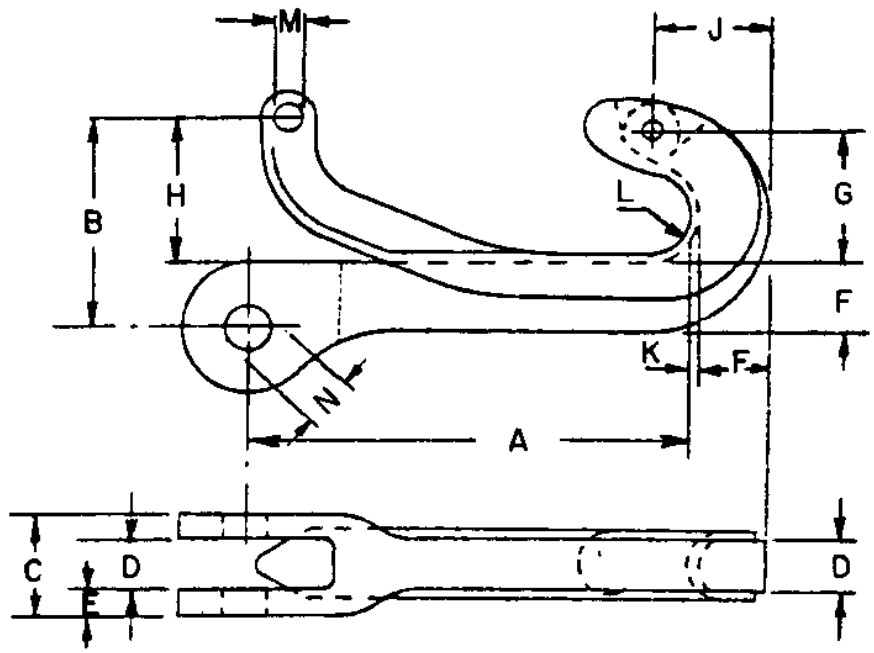

DIMENSIONS IN INCHES														TEST REQUIREMENTS	
A	B	C	D	E	F	G	H	J	K	L	M	N	WEIGHT (LBS.)	PROOF TEST (LBS.)	BREAK TEST (LBS.)
29-7/8	14-1/2	7	3-1/2	1-3/4	4-3/4	8-11/16	10	7-7/8	1/2	2-7/8	2	3	370	300,000	N.A.

[1] Data provided by Baldt, Inc. For markings and general notes, see Table 10. Similar quick-release hooks that are stocked for use in the standard fuel loading type fixed 3 and 5 leg moorings have a hawser retaining device and a lower strength.

4. Anchors. The following tables furnish weight (in air), dimensional, and proof load test data of anchors as published by various manufacturers, The manufacturers are headquartered in both the U.S. and abroad. Foreign manufacturers may have licensees in the U.S. who distribute, or fabricate and distribute, the anchors domestically. The designer of a mooring system should be aware of the limitations of the lifting capacity of available installation equipment so that the dry weight of the anchor does not exceed this capacity.

Most of the anchors are furnished with shackles to which a chain can be connected. For anchors which are not provided with shackles, refer to the previous part of this section to select a shackle with a suitable bolt diameter, jaw opening, and strength.

Anchor selection is discussed in Part 2 of Section 5. For each of the anchor types listed, there is a relationship between the dry weight of the anchor and its holding power in different types of sea bottoms. These holding power-to-weight ratios are summarized in Table 78. For factors of safety for anchors, see DM-26.5.

Table 44. Baldt Stockless Anchors [1]

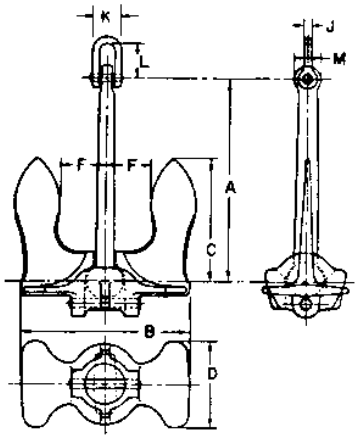

ANCHOR WEIGHT (LBS.)	HEAD NO.	SHANK NO.	DIMENSIONS IN INCHES A	B	C	D	F	J	K	L	M	PROOF TEST (LBS.)
200	2	2	27	18	15-1/8	9-1/2	5-1/8	1	5	5-1/2	4	8,300
300	4	3	32	23-1/4	17-3/16	11-11/16	6-11/16	1	5	5-1/2	4-1/2	10,900
400	6	3	32	25-3/4	19	13	7	1	5	5-1/2	4-1/2	13,000
500	8	4	35	26-1/2	20	14	7	1-1/4	6	7	5-1/2	15,000
700	12	5	38	29-1/2	23-1/2	15-5/8	8-1/8	1-1/4	6	7	5-3/4	18,700
775	13	5	38	32	24-3/4	16-7/8	8-5/8	1-1/4	6	7	5-3/4	20,050
900	15	7	42	32	24	17	9	1-1/2	6-1/2	7-1/2	6-1/2	22,300
1,000	16	7	42	33-5/8	25-1/8	18	9-3/4	1-1/2	6-1/2	7-1/2	6-1/2	24,100
1,260	18	8	46	36-3/8	28-3/8	18-3/4	9-7/8	1-3/4	7-1/2	8-1/2	6-3/4	28,800
1,430	20	9	49	39	28-7/8	20	10-3/4	2	8-1/2	9-3/4	7	31,700
1,540	21	9	49	40	30-1/2	20-1/2	11	2	8-1/2	9-3/4	7	33,600
1,600	22	9	49	40	30-1/2	20-1/2	11	2	8-1/2	9-3/4	7	34,600
1,750	23	10	52	41-1/2	33-1/4	21	11-3/8	2	8-1/2	9-3/4	7-1/4	37,150
1,875	24	10	52	43	34-3/4	22	12	2	8-1/2	9-3/4	7-1/4	38,400
1,950	25	10	52	43	34-3/4	22	12	2	8-1/2	9-3/4	7-1/4	40,550
2,100	26	12	58	44-3/4	33-3/8	23	12-1/8	2	8-1/2	9-3/4	7-1/2	43,500
2,500	28	12	58	44-3/4	33-3/8	23-1/4	12-1/8	2	8-1/2	9-3/4	7-1/2	49,650
2,800	30	12	58	48	35-7/8	25	13	2	8-1/2	9-3/4	7-1/2	54,500
3,000	31	14	64	47	36	25-1/2	12-3/4	2-1/2	10	12	8-3/4	57,700
3,500	33	14	64	52-3/4	39-1/2	27-1/2	14-1/4	2-1/2	10	12	8-3/4	65,200
4,000	35	15	70-5/8	53-1/4	39-1/4	27-1/2	14-1/2	2-1/2	10	12	9-1/2	72,600
4,500	37	15	70-5/8	56-3/4	42	29	15	2-1/2	10	12	9-1/2	79,700
5,000	39	18	76	57-1/2	42	30	15-5/8	3	12	15	10-1/4	86,500
6,000	43	18	76	63-1/2	47	33-1/4	17-1/4	3	12	15	10-1/4	99,100
6,300	44	18	76	63-1/2	47	33-1/4	17-1/4	3	12	15	10-1/4	102,700
6,500	45	20	82	63-1/2	47-5/8	33	17-1/4	3	12	15	10-3/4	105,100
6,750	46	20	82	65	48-3/4	33-3/4	17-5/8	3	12	15	10-3/4	107,900
7,000	47L	20	82	66-5/8	49-3/4	34-3/4	18	3	12	15	10-3/4	110,700
7,600	48	20	82	67-1/2	49-3/4	34-3/4	18-3/8	3	12	15	10-3/4	117,300
8,100	49	22	93-1/2	66-1/4	48-7/8	34-1/4	18-1/4	3-1/2	13-1/4	17	11-1/2	122,500
8,600	50	22	93-1/2	68-1/2	50-1/2	35-3/4	18-1/2	3-1/2	13-1/4	17	11-1/2	127,500
9,000	51	23	96	70-1/4	51-3/4	36-3/8	19-1/8	3-1/2	13-1/4	17	11-1/2	131,400
10,000	53L	24	96	75-1/2	58	39	21	4	14-3/4	19	12	140,400
11,000	53H	24	96	75-1/2	58	39	21	4	14-3/4	19	12	148,500
12,000	56L	24	96	76-3/4	58	40	20-3/4	4	14-3/4	19	12	156,100
13,000	56	26	98	76-3/4	58	40	20-3/4	4	14-3/4	19	12	163,500
14,000	59	27	103	80-1/2	60	44	22-1/4	4	14-3/4	19	13	170,550
15,000	60	28	103	86	65	46	24	4	14-3/4	19	13	176,800
16,000	62	30	108	86	65	46	24	4	14-3/4	19	13	182,800
18,000	64	32	112	88-1/4	65-5/8	48-1/4	24-3/4	4-1/2	16-3/4	22	13	194,200
18,900	64H	32	112	88-1/4	65-5/8	48-1/4	24-3/4	4-1/2	16-3/4	22	13	198,800
20,000	66	34	112	96	72	50	26	4-1/2	16-3/4	22	14	204,300
25,000	67	35	120	103	77-1/2	53-3/4	28	4-1/2	16-3/4	22	15	227,000
30,000	69	37	128	110	82-1/2	57-1/4	29-7/8	5	18-3/4	24	16	247,600
35,000	70	38	135	116	87	60	31-1/2	5	19	25	17	265,600
40,000	71	39	140	121	91	63	32	5-1/2	20	26	17-1/2	278,200
45,000	72	40	147	126	94	65	34	5-1/2	21	27	18	287,550
50,000	73	41	152	131	99	68	35	6	21-1/2	28	19	292,600

[1] Data provided by Baldt, Inc. For markings and general notes, see Table 10. This table is included for informational purposes. Use of this type anchor is NOT authorized until holding power ratios have been established by the Civil Engineering Laboratory.

Table 45. U.S. Navy Standard Stockless Anchors [1]

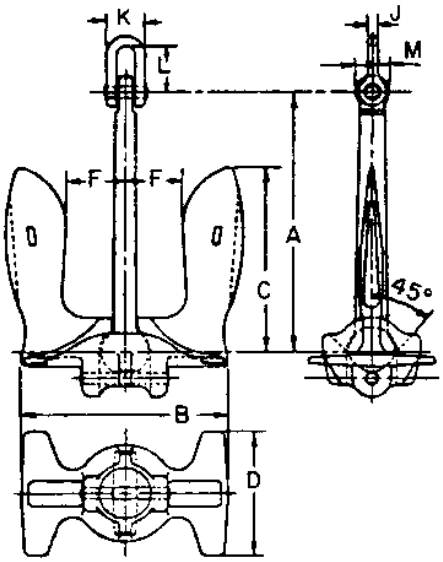

ANCHOR WEIGHT (LBS.)	DIMENSIONS IN INCHES									PROOF TEST (LBS.)
	A	B	C	D	F	J	K	L	M	
300	28-5/8	22-1/8	20-5/16	13-3/4	6-7/16	1-1/8	4	6	3-1/2	11,560
400	31-1/2	24-3/8	22-3/8	15-1/8	6-15/16	1-1/4	4-3/8	6-13/16	3-7/8	13,520
500	34	26-1/4	24-3/32	16-1/4	7-1/2	1-5/16	4-11/16	6-5/16	4-1/8	15,420
600	36	27-29/32	25-5/8	17-9/32	7-15/16	1-7/16	5	6-5/8	4-3/8	17,270
800	30-11/16	30-11/16	28-3/16	19	8-3/4	1-9/16	5-9/16	7-5/16	4-7/8	20,970
1,000	42-3/16	33-1/8	30-3/8	20-1/2	9-13/32	1-11/16	6	7-15/16	5-1/4	24,700
1,200	45-3/8	35-1/8	32-1/4	21-3/4	10	1-7/8	6-3/8	8-3/16	5-1/2	28,360
1,300	46-5/8	36	33-1/8	22-3/8	10-9/32	1-3/4	6-3/8	8-11/16	5-11/16	30,210
1,500	49	37-7/8	34-3/4	23-1/2	10-3/4	2	6-7/8	9	6	33,810
1,800	52	40-1/4	36-15/16	24-15/16	11-7/16	2-1/16	7-5/16	9-9/16	6-3/8	39,000
2,000	54	41-11/16	38-1/4	25-13/16	11-7/8	2-1/8	7-9/16	9-15/16	6-1/2	42,450
2,200	54-5/8	43	39-1/2	26-5/8	12-1/4	2-3/16	7-13/16	10-1/4	6-3/4	45,730
2,500	58	44-7/8	41-1/4	27-13/16	12-3/4	2-1/4	8-3/16	10-3/4	7-3/16	50,660
3,000	73-1/2	50	44-1/2	30-1/2	13-7/8	2-3/8	8-1/2	11-1/4	7-1/2	58,720
3,500	64-7/8	50-1/8	46-3/32	31-1/16	14-9/32	2-1/2	8-15/16	12	7-7/8	66,220
4,000	67-7/8	52-1/2	48-7/32	32-9/16	14-15/16	2-11/16	9-9/16	12-1/2	8-13/16	73,720
5,000	73	56-9/16	51-15/16	35	16-1/16	2-7/8	10-1/4	13-1/2	9-1/8	87,360
6,000	77-3/4	60-3/16	55-1/4	37-5/16	17-1/8	3-1/16	10-15/16	14-5/16	9-5/8	99,760
7,000	82	63-1/4	58-1/16	39-1/4	18-1/32	3-3/16	11-1/2	15-1/8	9-15/16	111,440
8,000	85-1/2	66-1/8	60-3/4	41	18-7/8	3-3/8	12	15-3/4	10-3/8	121,830
9,000	88-7/8	68-3/4	63-1/8	42-5/8	19-5/8	3-1/2	12-1/2	16-3/8	10-13/16	131,480
10,000	92	71-1/4	65-3/8	44-1/8	20-5/16	3-5/8	12-15/16	17	13-3/16	140,830
11,000	95	73-9/16	67-1/2	45-5/8	20-29/32	3-3/4	13-3/8	17-1/2	11-3/4	149,100
12,000	97-7/8	75-3/4	69-1/2	47	21-19/32	3-7/8	13-3/4	18	11-7/8	156,600
13,000	100	77-3/8	71-1/16	46-5/8	22	3-15/16	14-1/8	18-3/8	12-5/16	164,100
14,500	104	80-5/8	74	50	22-9/16	4-1/8	14-5/8	19-3/16	12-7/8	174,100
15,000	105-1/2	82-1/4	73-3/4	51	23-1/8	4-1/4	15	19-5/8	13	177,220
16,000	107-11/16	83-11/32	76-1/2	51-5/8	23-23/32	4-1/4	15-1/8	19-7/8	13-1/4	183,500
18,000	112	86-5/8	79-9/16	53-3/4	24-5/8	4-3/8	15-3/4	20-5/8	13-13/16	194,720
20,000	116	89-3/4	82-7/16	55-5/8	25-1/2	4-1/2	16-1/4	21-7/16	14-5/16	204,720
22,500	120-1/2	93-5/16	85-11/16	57-13/16	26-17/32	4-3/4	17	22-1/4	14-7/8	217,000
25,000	125	96-11/16	88-13/16	59-15/16	27-1/2	5	17-9/16	22-15/16	15-7/16	232,100
30,000	132-3/4	102-11/16	94-1/4	63-5/8	29-7/32	5-1/4	18-11/16	24-7/16	16-3/8	252,800
35,000	139-3/4	108	99-5/16	67-1/16	30-3/4	5-1/2	19-11/16	25-3/4	17-1/4	269,900
40,000	146	113-1/16	103-1/8	70	32-1/4	5-5/8	20-1/8	27-1/8	17-3/4	284,300
45,000	152	117-5/8	108	72-7/8	33-7/16	6	21-3/8	28	18-3/4	296,400
60,000	188	125-3/4	132-7/8	87-5/16	38-11/16	7-1/2	24-1/2	29	20-1/2	372,700

[1] Data provided by Baldt, Inc. For markings and general notes, see Table 10. Similar anchors that are stocked for use in the standard free-swinging, fleet-type moorings have different rotational details and dimensions.

Table 46. U.S. Navy Lightweight Type Anchors (Lwt) [1]

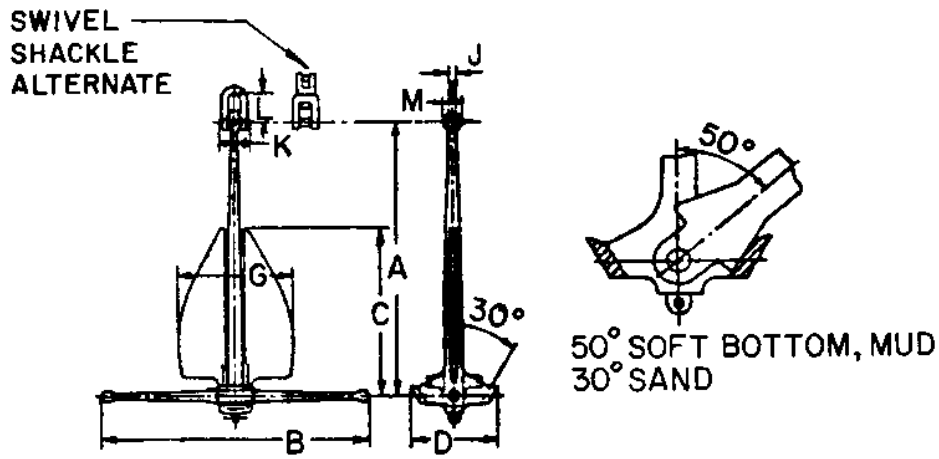

ANCHOR WEIGHT (LBS.)	DIMENSIONS IN INCHES									PROOF TEST (LBS.)
	A	B	C	D	G	J	K	L	M	
100	41-1/2	39-1/2	24	12-3/16	15-5/8	7/8	3-3/8	3-3/4	2-1/4	6,200
150	46-3/4	44-1/2	27	13-11/16	17-3/8	1	4	5-1/2	2-3/8	8,300
200	47-1/2	45	29	14-3/16	18-7/8	1	4	5-1/2	3-1/8	10,100
250	47-1/2	45	29	14-9/16	18-7/8	1	4	5-1/2	3-1/8	12,400
300	53	50	32-1/2	16-5/16	21-1/4	1-1/4	5	7	3-1/4	13,000
350	53	50	32-1/2	16-11/16	21-1/4	1-1/4	5	7	3-1/4	14,300
400	57-1/2	54-1/4	35-1/4	17-3/4	23	1-1/4	5	7	3-1/2	15,600
450	60	56-1/2	36-3/4	18-3/8	24	1-1/4	5	7	3-3/4	16,900
500	61-1/2	58-1/2	37-1/2	19	24	1-1/2	6	7-1/2	4-1/4	18,300
750	69	64-1/2	42	21-1/8	28-7/16	1-1/2	6	7-1/2	4-7/8	24,100
1,000	75	71	46	24-1/2	29-1/4	2	8	9-3/4	5-1/4	30,000
2,000	92-1/2	85	56-1/2	30	37-1/4	2-1/2	9-1/2	12	7	52,500
3,000	108-1/2	104	66	34-3/4	40-3/8	3	11	15	7-3/4	72,500
4,000	116	110	71	37-1/2	44	3	11	15	9	90,500
5,000	118	112	72	38-3/4	44-3/4	3-1/2	12-1/2	17	9-1/2	105,500
6,000	124	118	76	41	47-1/4	4	14	19	10-1/4	121,500
7,000	124	118	76	41	47-1/4	4	14	19	10-1/4	134,500
8,000	128	121	78	43-1/2	50-1/4	4	14	19	12	145,500
9,000	133	126	81-1/8	45-1/4	52-1/4	4	14	19	12-1/2	156,000
10,000	144	137	88	49	55-1/4	4-1/2	16	22	13	165,500
11,000	144	137	88	49	55-1/4	4-1/2	16	22	13	174,000
12,000	146	138-1/2	89-1/8	49-3/4	57-3/8	4-1/2	16	22	13-3/4	183,000
13,000	154	146	94	52-1/2	60-1/2	5	17-1/2	24	14-1/2	190,000
14,000	154	146	94	52-1/2	60-1/2	5	17-1/2	24	14-1/2	198,000
15,000	157	149-1/4	96	53-5/8	61-7/8	5	17-1/2	24	14-7/8	204,000
16,000	161	152-1/2	98-1/4	54-7/8	63-1/4	5	17-1/2	24	15-1/8	210,000
17,000	164	155-1/2	100	56	64-1/2	5	17-1/2	24	15-1/2	214,000
18,000	167	158-1/2	102	57	65-5/8	5	17-1/2	24	15-3/4	223,000
19,000	170-1/8	161-3/8	104	58	66-3/4	5-1/2	20	25	16	229,000
20,000	173	164	106	59	68	5-1/2	20	25	16-3/8	233,000
25,000	19[illegible]	178	116	67-1/4	75	5-1/2	20	26-1/2	16	260,000
30,000	198	189	12[illegible]	67-1/2	78	5-1/2	20	29	17	278,000
35,000	208	199	127	71	82	6	21	30-1/2	18	289,500
40,000	218	240	13[illegible]	75	86	6	24	32	20-1/2	296,000
45,000	227	250	136	78	89	6-1/4	26	33	22	302,700
50,000	235	260	141	81	92	6-1/2	27	34	23	309,500
60,000	250	278	150	86	97	6-1/2	29	36	24	321,000
70,000	264	290	157	91	103	7	30	38	26	336,000
80,000	275	304	165	95	107	7-1/2	31	40	27	349,400
90,000	287	317	172	99	112	8	33	41	28	362,700
100,000	296	328	178	102	116	8	34	43	29	376,000

[1] Data provided by Baldt, Inc. For markings and general notes, see Table 10. Similar anchors that are stocked for use in the standard free-swinging, fleet-type moorings have different shackle dimensions.

Table 47. U.S. Navy STATO Mooring Anchors [1]

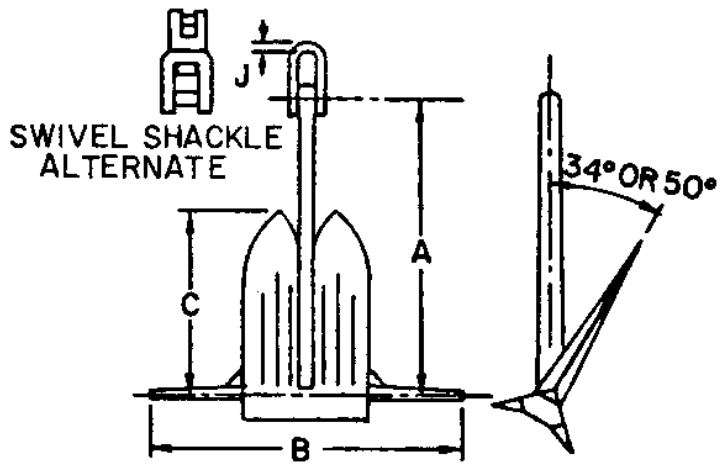

ANCHOR WEIGHT (LBS.)	DIMENSIONS IN INCHES				PROOF TEST (LBS.)
	A	B	C	J	
200	42	59	26	3/4	-
3,000	129	109	72	1-3/4	72,500
6,000	144	143	92	2-1/4	121,500
9,000	160	170	100	2-3/4	-
12,000	186	197	113	3	183,000
15,000	204	224	126	3-1/2	213,000
20,000	210	230	129	3-3/4	249,400
25,000	226	246	137	4	282,500
30,000	235	257	245	5	319,400
35,000	248	271	153	5-1/4	357,000
40,000	258	283	160	5-1/2	386,000
45,000	269	295	166	5-3/4	413,000
50,000	277	303	171	6	448,300
60,000	297	320	180	6	506,200
70,000	310	336	191	6-1/2	561,400
80,000	322	350	200	6-1/2	613,000
90,000	345	366	206	7	690,000
100,000	350	380	216	7-1/2	767,000

[1] Data provided by Baldt, Inc. For markings and general notes, see Table 10. These anchors are castings. Similar anchors that are stocked for use in the standard free-swinging, fleet-type moorings are fabricated of steel plate.

Table 48. Danforth Anchors [1]

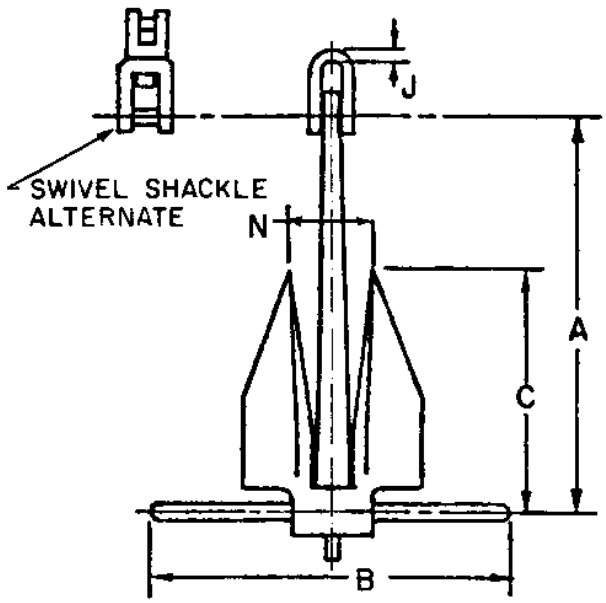

ANCHOR WEIGHT (LBS.)	DIMENSIONS IN INCHES					PROOF TEST (LBS.)
	A	B	C	J	N	
200	52-1/2	45-1/2	33	7/8	6-1/2	10,100
500	63	54-1/2	39-3/4	1-1/2	15-1/8	18,300
1,000	72	62	45-3/8	2	18-3/4	30,000
2,000	83	71-3/4	52	2-1/2	22-5/8	52,500
3,000	94	89	59	3	14-3/8	72,500
4,000	104	98-3/4	65-1/2	3	15-3/8	90,500
5,000	112	106-1/2	70-1/2	3-3/8	18	105,500
6,000	118	112	74	3-3/4	18-5/8	121,500
8,000	129	122-1/2	77-3/8	4-1/8	20-1/4	145,500
10,000	138	131	87	4-1/2	21-7/8	165,500
12,000	145	145	91	4-3/4	23	183,000
14,000	152	152	95-3/4	5	24	198,000
16,000	160	160	101	5-1/4	25-1/4	210,000
20,000	172	163	108-3/8	5-5/8	27-1/4	233,000
30,000	197	187	112	6-1/2	31-1/4	278,000
35,000	207	196	118	6-1/2	33	289,500
40,000	216	205	123	7	34-1/2	296,000
50,000	232	222	133	7-1/2	37-1/2	309,500
60,000	246	235	141	7-1/2	40	321,000
70,000	258	247	148	8	42	336,000
80,000	271	259	156	8	44	349,400
90,000	282	269	162	8-1/2	46	362,900
100,000	293	280	168	8-1/2	48	376,000

[1]Data provided by Baldt, Inc. For markings and general notes, see Table 10.

Table 49. High Holding Power Stock Anchors — Type 1 (Offdrill II Type) [1]

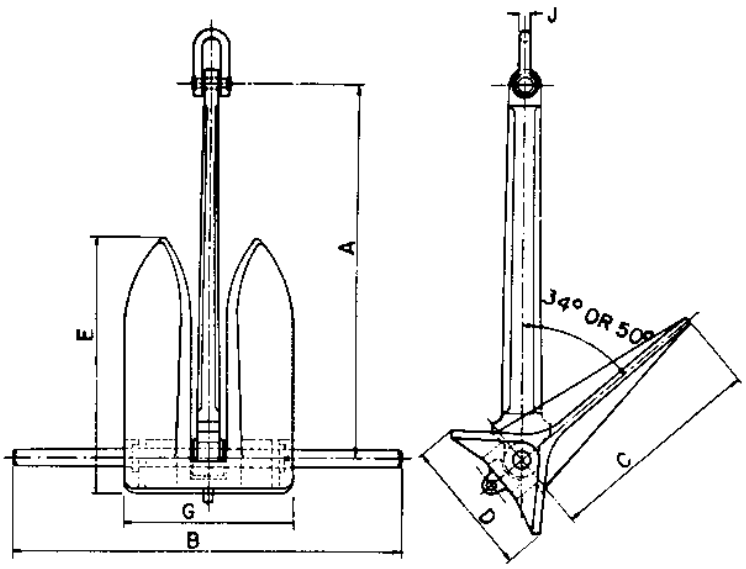

ANCHOR WEIGHT (LBS.)	DIMENSIONS IN INCHES						
	A	B	C	D	E	G	J
500	47-7/16	52-3/8	28-9/16	15-9/16	34	19-1/2	1-1/2
1,000	59-3/4	65-7/8	36	19-5/8	42-7/8	24-5/8	2
1,500	69-5/8	83-7/16	41-3/8	21-5/8	49-1/8	29-1/8	2
2,000	76-3/4	92-1/8	45-3/16	23-7/8	54-3/8	32	2-1/2
2,500	82-5/8	99-3/16	49-1/4	25-5/8	58-1/2	34-7/16	2-1/2
3,000	87-3/4	104-1/2	52-3/8	26-3/4	61-3/8	36-5/8	3
3,500	92-1/2	111	55-1/8	28-3/4	65-1/2	38-9/16	3
4,000	98-3/8	115-1/8	57-1/2	31-1/2	68-1/2	40-1/8	3
4,500	100-1/2	120-5/8	59-7/8	32-5/8	71	41-7/8	3-1/8
5,000	104-1/8	125	62	33-7/8	73-5/8	43-5/16	3-3/8
6,000	110-3/4	132-7/8	66	34-1/4	78-3/8	46	4
7,000	116-1/8	139-3/8	69	36	82-1/4	48-7/16	4
8,000	121-7/8	153-1/8	72-1/2	37-3/4	86-1/4	50-3/4	4-1/8
10,000	131-5/16	157-1/2	78-1/8	40-3/4	92-7/8	54-3/4	4-1/2
12,000	139-3/8	167-1/4	83	43-1/8	98-3/8	58	4-7/8
14,000	146-7/8	177-1/8	87-3/8	45-1/2	103-7/8	61-1/4	5-1/8
15,000	153-9/16	187	87-3/8	47-1/8	103-7/8	61-1/4	5-1/8
16,000	153-9/16	187	91-1/4	47-1/2	108-5/8	64	5-1/8
20,000	165-3/8	192-7/8	98-1/4	53-1/2	117-1/8	68-7/8	5-5/8
25,000	178-1/8	203-3/8	105-1/2	58-1/2	123-1/8	73-3/4	6-1/8
30,000	189-3/8	210	112-1/2	61-5/8	134	78-3/4	6-1/2
34,000	192-7/8	212-3/16	116-1/4	63-3/8	138-3/8	81-1/2	6-3/4
40,000	201-9/16	221-7/8	121-5/8	66-3/8	144-5/8	85-1/4	7-1/8
45,000	209-7/8	230-7/8	126-1/2	68-7/8	150-9/16	88-9/16	7-1/8
50,000	220-1/2	242-1/8	132-1/4	72-1/2	157-1/2	93-1/8	7-7/8
60,000	233-11/16	257-1/4	140-1/2	77	167-5/16	99	8-1/2
70,000	245-1/2	270	147-3/4	80-7/8	176	104-1/8	8-1/2

[1] Data provided by Vicinay International Co., Inc. Proof test is same as connecting chain. For markings and general notes, see Table 10.

Table 50. High Holding Power Stock Anchors – Type 2 (G.S. Type) [1]

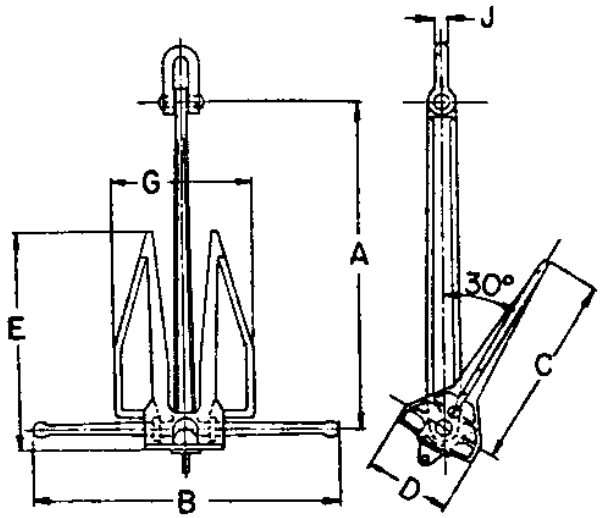

ANCHOR WEIGHT (LBS.)	DIMENSIONS IN INCHES						
	A	B	C	D	E	G	J
75	45-5/8	39-1/2	27-9/16	8	28-3/4	16-1/2	1/2
100	47-1/2	41	28-3/8	8-11/16	29-1/2	17-5/16	5/8
150	49	42-1/2	29-7/8	9	31-1/2	18-7/8	3/4
200	52-1/2	45-1/2	32-1/4	9-3/4	34-1/4	20-1/2	1
300	56	48-1/2	34-1/4	11	35-5/8	23-1/4	1-3/16
400	58-1/4	52	36-1/4	11-13/16	37-5/8	24-5/8	1-3/8
500	63	54-1/2	38-3/16	12-5/8	40-9/16	26	1-1/2
750	67-1/2	58-1/2	40-15/16	14-9/16	43-11/16	28-3/8	1-1/2
1,000	72	62-1/4	43-11/16	16-3/16	46-1/2	29-15/16	2
1,500	77	66-1/2	46	18-7/8	48-7/16	31-7/8	2
2,000	83	71-3/4	50	20-7/8	53-3/16	35-13/16	2-1/2
2,500	89	84-1/2	53-1/8	22	56-11/16	36-5/8	2-1/2
3,000	94	89-1/4	59	23-5/8	63-3/8	39	2-15/16
3,500	100	95-1/8	63	25-3/16	67-1/2	40-3/16	2-15/16
4,000	104	98-7/16	65-3/8	26	70-1/8	41-5/16	3
4,500	107-7/8	102-3/8	67-15/16	27	74-3/16	43-5/16	3-1/8
5,000	112	106-5/16	70-1/2	28	76	45-1/4	3-3/8
6,000	118	112-5/8	74	29-7/8	79-7/8	47-5/8	4
7,000	123	116-1/2	77-9/16	31-1/8	84-1/4	49-5/8	4
8,000	129	122-13/16	81-1/8	32-11/16	87-3/4	52	4-1/8
10,000	138	126-3/4	87	35	94-1/8	55-15/16	4-1/2
12,000	149	146-1/2	88-3/8	37-13/16	97-1/4	59-13/16	4-15/16
14,000	152	152	90-1/8	38-9/16	99-3/16	61-7/16	5-1/8
16,000	159-7/8	159-13/16	100-13/16	39-3/4	111-13/16	64-15/16	5-1/4
20,000	171-5/8	163	103-1/8	43-11/16	115	69-11/16	5-5/8
25,000	184-5/8	173-3/16	110-13/16	47	123-5/8	75	5-7/8
30,000	209-1/2	187-3/8	119-11/16	50-3/8	131-7/8	80-5/16	6-1/2
35,000	220-1/2	197	126	53-1/8	140-9/16	84-5/8	6-11/16
40,000	230-1/2	204	131-11/16	55-1/2	146-7/8	88-3/8	7-1/8
45,000	239-1/2	214-3/16	137	57-11/16	152-3/4	91-15/16	7-1/8
50,000	248-1/4	221-13/16	141-7/8	59-13/16	158-1/4	95-1/4	7-7/8
60,000	263-3/4	235-13/16	146-5/8	63-9/16	168-1/8	101-3/8	8-1/2
70,000	277-3/4	248-7/16	154-5/16	66-7/8	177	106-11/16	8-1/8

[1] Data provided by Vicinay International Co., Inc. Proof test is same as connecting chain. For markings and general notes, see Table 10. This table is included for informational purposes. Use of this type anchor is NOT authorized until holding power ratios have been established by the Civil Engineering Laboratory.

Table 51. Moorfast Anchors [1]

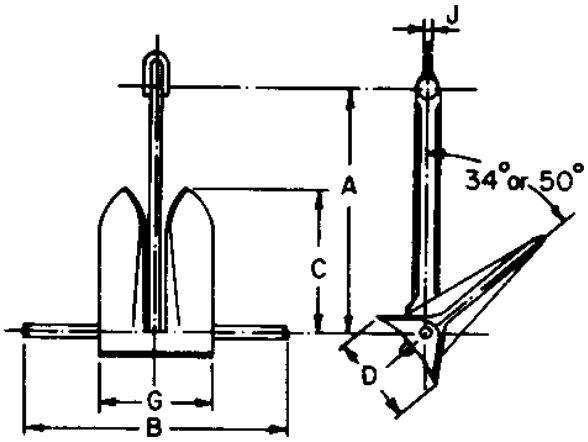

ANCHOR WEIGHT (LBS.)	DIMENSIONS IN INCHES						PROOF TEST (LBS.)
	A	B	C	D	G	J	
1,000	61	75	37	19	25	2	30,000
3,000	88	109	54	27	37	3	72,500
6,000	101	143	61	31	42	3-1/2	121,500
8,000	122	153	75	38	51	3-1/2	145,500
10,000	131	157	80	41	55	4	165,500
12,000	139	167	85	43	58	4	183,000
14,000	147	177	90	45	61	4	198,000
16,000	153	187	94	48	64	4-1/2	210,000
20,000	164	196	102	51	69	4-1/2	233,000
30,000	189	217	118	59	79	5	278,000
40,000	214	248	127	63	86	5-1/2	296,000
50,000	222	257	132	66	89	6	309,500
60,000	232	271	140	70	95	6	321,000
70,000	244	274	147	73	100	6	336,000
80,000	255	298	154	77	105	6-1/2	349,400
90,000	266	310	160	80	109	6-1/2	362,700
100,000	275	320	166	83	113	7	376,000

[1]Data provided by Baldt, Inc. For markings and general notes, see Table 10.

Table 52. Boss Mooring Anchors [1]

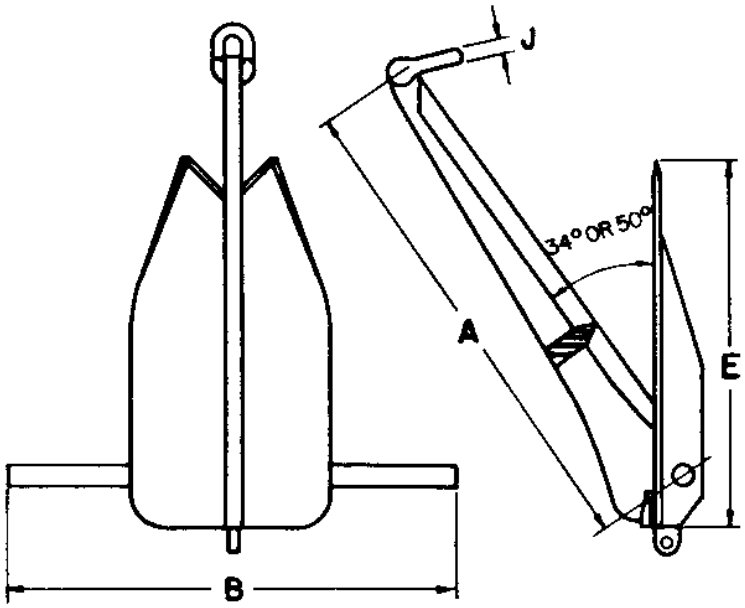

ANCHOR WEIGHT (LBS.)	DIMENSIONS IN INCHES				FLUKE AREA (SQ.FT.)	PROOF TEST (LBS.)
	A	B	E	J		
1,000	71	69	53	1-3/8	7.8	30,000
5,000	124	120	92	2	23.6	107,000
10,000	155	150	116	3	36.6	165,000
14,000	179	168	130	3-1/2	46.4	205,000
21,000	198	192	148	4-1/2	60.6	250,200
30,000	223	216	167	5	76.7	319,000
40,000	248	240	185	5	94.6	386,000

[1]Data provided by Baldt, Inc. For markings and general notes, see Table 10.

Table 53. Snug Stowing Anchors [1]

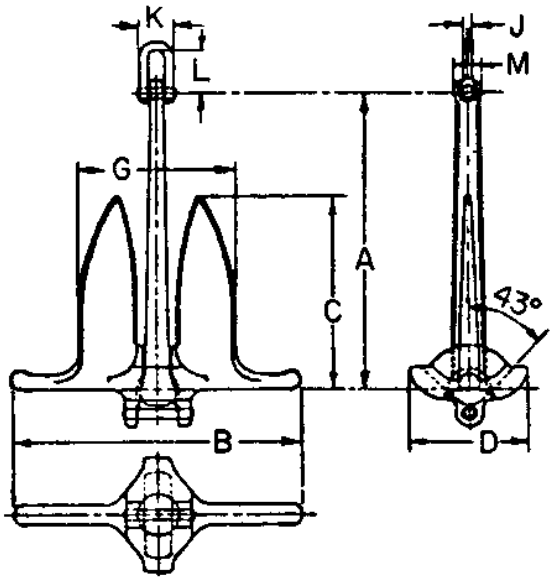

ANCHOR WEIGHT (LBS.)	DIMENSIONS IN INCHES									PROOF TEST (LBS.)
	A	B	C	D	G	J	K	L	M	
200	30-7/8	29-11/16	20-1/8	12-1/16	16-3/16	1	4	5-1/2	2-3/4	10,100
250	33-5/16	32	21-11/16	13	17-7/16	1	4	5-1/2	3	12,400
300	35-5/15	34	23	13-3/4	18-1/2	1	4	5-1/2	3-3/8	13,000
350	37-3/16	35-3/4	24-1/4	14-1/2	19-1/2	1	4	5-1/2	3-3/8	14,300
400	38-7/8	37-3/8	25-3/8	15-1/4	20-3/8	1	4	5-1/2	3-1/2	15,600
450	40-3/8	38-7/8	26-3/8	15-3/4	21-1/8	1	4	5-1/2	3-3/8	16,900
500	41-3/4	40-1/4	27-1/4	16-3/8	21-7/8	1-1/4	4-7/8	7	3-3/4	18,300
750	48	46	31-1/4	18-3/4	25-1/8	1-1/4	4-7/8	7-1/2	4-3/8	24,100
1,000	52-3/4	50-3/4	34-3/8	20-5/8	27-5/8	1-1/2	5-3/8	7-1/2	4-3/4	30,000
2,000	66-1/2	64	43-1/4	26	34-7/8	2	7-3/4	9-3/4	6	52,500
3,000	76	73	49-1/2	29-5/8	39-3/4	2-1/2	9-1/4	12	6-7/8	72,500
4,000	83-3/4	80-1/2	54-1/2	32-3/4	43-7/8	2-1/2	9-1/4	12	7-1/2	90,500
5,000	90-3/8	86-3/4	58-3/4	35-1/4	47-1/4	3	10-3/4	15	8-1/8	105,500
6,000	96	92-1/8	62-1/2	37-1/2	50-1/4	3	10-3/4	15	8-3/8	121,500
7,000	101	97	65-3/4	39-1/2	52-7/8	3	10-3/4	15	9-1/8	134,500
8,000	105-3/4	101-1/2	68	41-1/4	55-3/8	3	10-3/4	15	9-1/2	145,500
9,000	110	105-1/2	71-1/2	43	57-1/2	3-1/2	12	17	10	156,000
10,000	113-3/4	109-1/4	74	44-1/2	59-1/2	3-1/2	12	17	10-1/4	165,500
11,000	117-1/2	112-7/8	76-1/2	45-3/4	61-1/2	4	13-3/8	19	10-1/2	174,000
12,000	120-3/4	116	78-5/8	47-1/8	63-1/4	4	13-3/8	19	10-1/8	183,000
13,000	124	119-1/8	80-3/4	48-3/8	64-7/8	4	13-3/8	19	11-1/8	190,000
14,000	127-1/4	122-1/4	82-3/4	49-5/8	66-5/8	4	13-3/8	19	11-1/2	198,000
15,000	130	125	84-5/8	50-3/4	68	4	13-3/8	19	11-3/4	204,000
16,000	133-1/4	128	86-3/4	52	69-3/4	4	13-3/8	19	12	210,000
17,000	136	130-1/2	88-1/2	53-1/8	71-1/8	4	13-3/8	19	12-1/4	214,000
18,000	138-3/4	133-1/8	90-1/4	54-1/8	72-1/2	4-1/2	15-3/4	22	12-1/2	223,000
19,000	141	135-1/2	91-7/8	55	73-7/8	4-1/2	15-3/4	22	12-3/4	229,000
20,000	143-1/4	137-5/8	93-1/4	56	75	4-1/2	15-3/4	22	12-7/8	233,000
25,000	154	148	100-1/2	60-1/4	80-3/4	4-1/2	15-3/4	22	13-7/8	260,000
30,000	164	157-1/2	106-3/4	64-1/8	86	5	17-3/4	24	14-3/4	278,000
40,000	180	173	117	70	94	5-1/2	19	26	16	296,000
50,000	195	187	126	76	102	6	20	28	18	309,000
60,000	206	197	134	80	108	6	22	30	19	321,000
70,000	218	208	140	85	113	6-1/2	23	32	20	336,000
80,000	227	218	146	89	120	6-1/2	24	33	21	349,400
90,000	236	226	153	92	126	7	26	35	22	362,700
100,000	244	234	158	95	130	7	27	36	23	376,000

[1] Data provided by Baldt, Inc. For markings and general notes, see Table 10. This table is included for informational purposes. Use of this type anchor is NOT authorized until holding power ratios have been established by the Civil Engineering Laboratory.

Table 54. AC-14 Anchors [1]

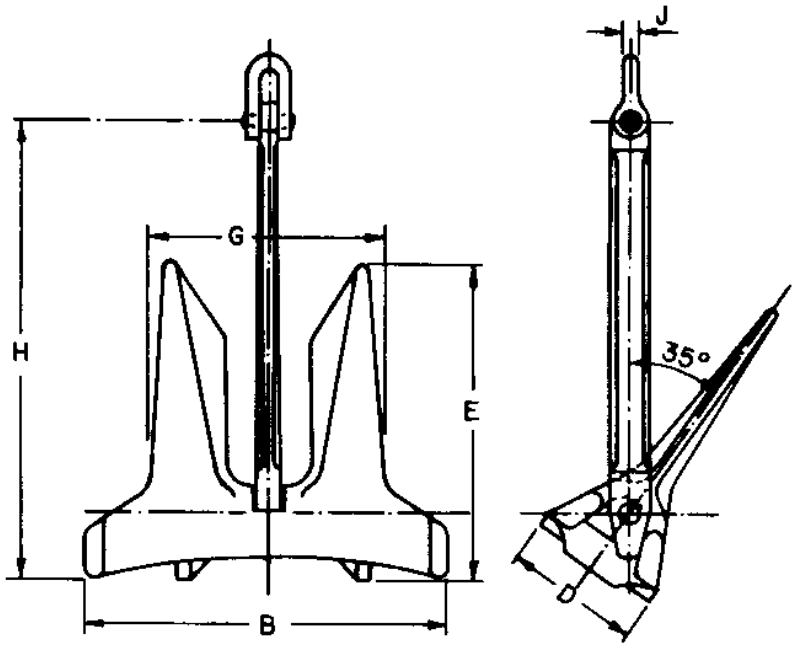

ANCHOR WEIGHT (LBS.)	DIMENSIONS IN INCHES					
	B	D	E	G	H	J
2,850	61	19	42	39	107	2-11/16
3,500	66	20	45	41	115	2-15/16
4,650	72	22	49	45	126	3-3/16
5,400	76	23	52	48	133	3-3/8
6,750	82	24	56	52	143	3-5/8
9,500	92	28	63	58	161	4-1/16
10,800	96	29	65	60	168	4-3/16
12,350	100	30	69	63	176	4-7/16
14,200	106	31	72	66	184	4-5/8
18,300	115	34	78	72	200	5-1/16
20,500	119	35	81	75	208	5-1/4
23,150	124	37	84	78	217	5-7/16
29,750	135	40	92	85	235	5-15/16
37,250	145	43	99	91	254	6-3/8
41,450	150	45	102	94	263	6-5/8
44,100	154	46	105	96	268	6-3/4
50,700	161	48	109	101	281	7-1/16

[1] Data provided by Vicinay International Co., Inc. For markings and general notes, see Table 10. This table is included for informational purposes. Use of this type anchor is NOT authorized until holding power ratios have been established by the Civil Engineering Laboratory.

Table 55. Deepsy Type Anchors [1]

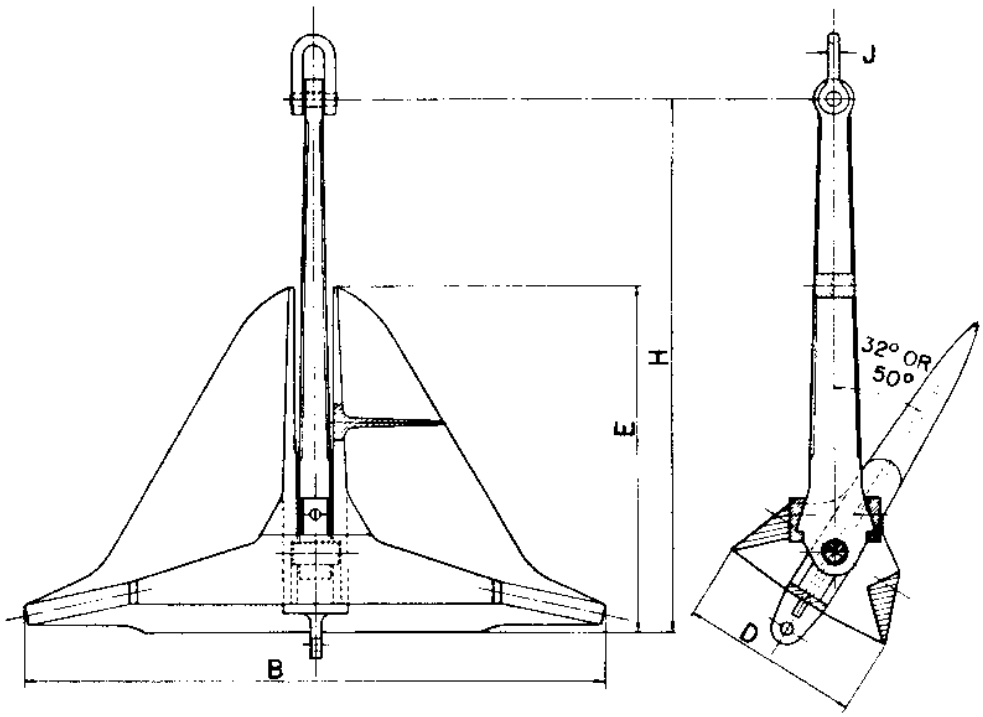

(Future Manual Change)

[1] This table is included for informational purposes. Use of this type anchor is NOT authorized until holding power ratios have been established by the Civil Engineering Laboratory.

Table 56. Flipper Delta Anchors [1]

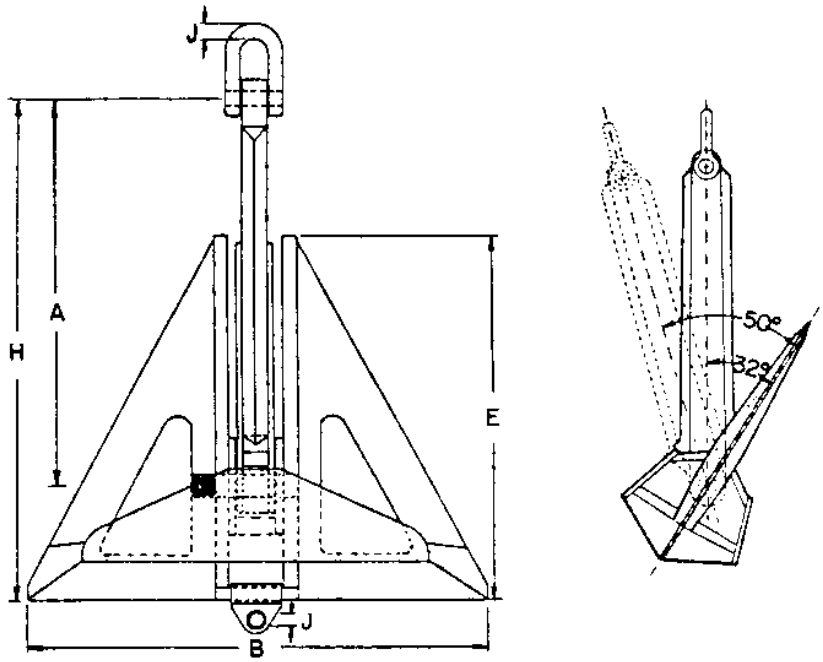

ANCHOR WEIGHT (LBS.)	DIMENSIONS IN INCHES					PROOF TEST (LBS.)
	A	B	E	H	J	
660	42-1/2	47-1/4	37-13/16	54-5/16	1-7/8	21,940
1,100	53-1/8	59-1/16	47-1/4	67-15/16	2-1/16	32,330
1,650	60-1/4	66-15/16	53-9/16	76-3/4	2-5/16	44,700
2,200	66-1/8	73-5/8	59-1/16	84-5/8	2-9/16	56,330
3,300	75-13/16	84-1/4	67-5/16	96-7/8	2-3/4	70,300
4,400	83-11/16	92-15/16	74-3/8	106-7/8	2-15/16	97,500
5,500	90-3/16	100	80-1/8	115-3/16	3-1/8	114,330
6,600	95-11/16	106-5/16	85-1/16	122-1/4	3-9/16	129,500
8,800	105-1/2	117-1/8	93-11/16	134-13/16	3-15/16	154,000
11,000	115-3/16	127-15/16	102-3/8	144-7/8	4-5/16	174,000
15,400	126-3/4	140-15/16	112-5/8	162-3/16	4-15/16	217,730
22,000	145-1/4	161-7/16	129-1/8	189-9/16	5-1/2	263,330
29,750	157-1/2	175-3/16	140-3/16	201-9/16	5-7/8	324,000
39,700	173-5/8	192-15/16	154-5/16	221-7/8	6-5/16	385,200
49,600	187-13/16	208-11/16	166-15/16	239-3/4	6-11/16	446,600
60,100	200-3/16	222-7/16	177-15/16	255-7/8	7-1/16	507,560
88,200	225-3/16	263-3/4	205-1/8	285-7/16	*6-7/8	-

*SHACKLE MATERIAL IS STAINLESS STEEL.

[1] Data provided by Anker Advies Bureau B.V. For markings and general notes, see Table 10.

Table 57. Delta Triple Anchors [1]

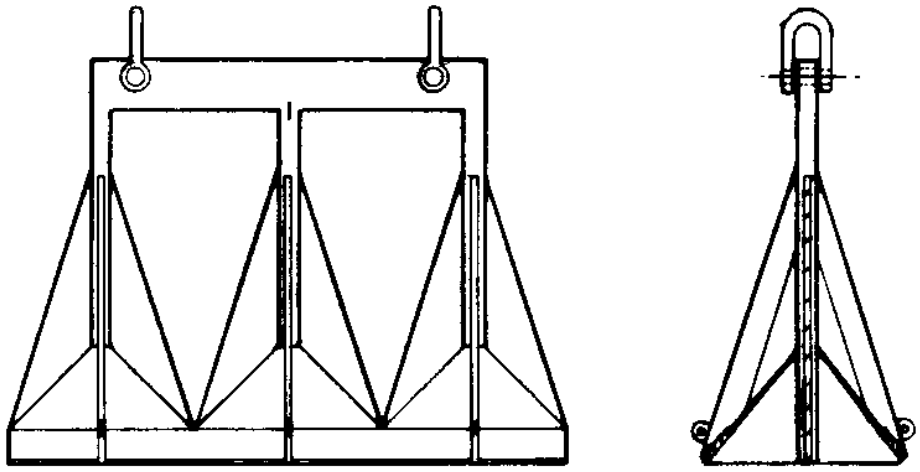

(Future Manual Change)

[1]This table is included for informational purposes. Use of this type anchor is NOT authorized until holding power ratios have been established by the Civil Engineering Laboratory.

Table 58. Stevin Anchors[1]

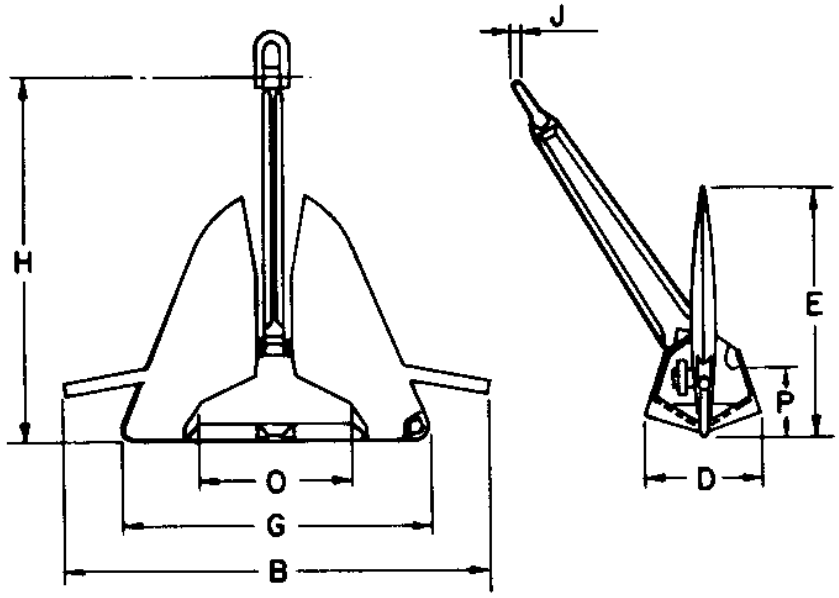

ANCHOR WEIGHT (LBS.)	DIMENSIONS IN INCHES							
	B	D	E	G	H	J	O	P
2,200	104	30	61	76	91	2-9/16	38	16
3,300	119	34	70	87	104	2-15/16	43	19
6,600	150	43	88	109	131	3-9/16	55	23
11,000	178	50	104	130	155	3-15/16	65	28
15,400	199	56	116	145	174	4-3/4	72	31
19,850	217	61	127	157	189	5-1/8	79	34
26,450	238	68	139	173	208	5-1/2	87	37
33,100	257	73	150	187	224	5-7/8	93	40
44,100	282	80	165	206	247	6-11/16	103	44
66,150	323	92	189	235	282	7-7/8	118	51

[1]Data provided by Vrijhof Ankers B.V. For markings and general notes, see Table 10.

Table 59. Stevfix Anchors [1]

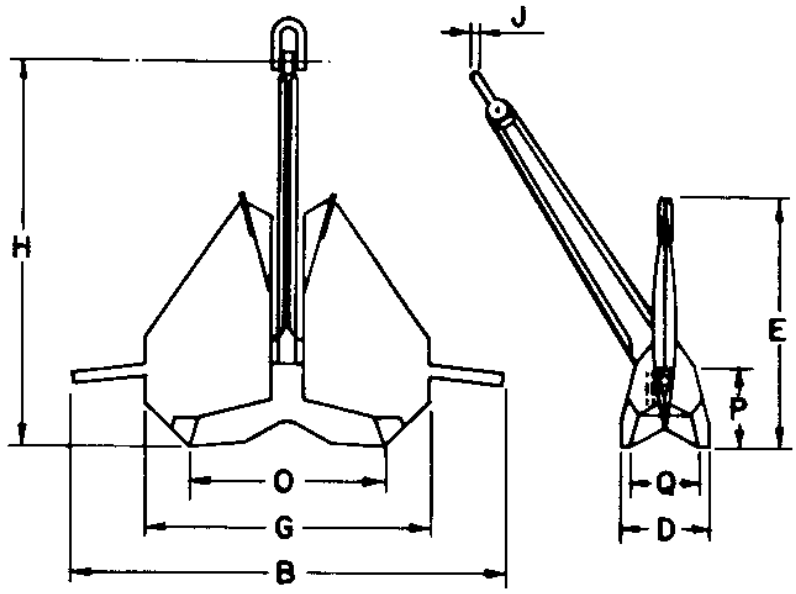

ANCHOR WEIGHT (LBS.)	DIMENSIONS IN INCHES								
	B	D	E	G	H	J	O	P	Q
2,200	114	25	66	76	99	2-9/16	53	8	19
3,300	131	28	75	87	113	2-15/16	61	9	21
6,600	165	36	94	109	142	3-9/16	76	11	27
11,000	195	43	112	130	169	3-15/16	91	13	32
15,400	218	47	125	145	189	4-3/4	101	15	36
19,850	237	52	136	158	205	5-1/8	110	16	39
26,450	261	57	150	174	226	5-1/2	121	18	43
33,100	281	61	162	187	244	5-7/8	131	19	46
44,100	309	67	178	206	268	6-11/16	144	21	51
66,150	355	77	204	236	307	7-7/8	165	25	58

[1] Data provided by Vrijhof Ankers B.V. For markings and general notes, see Table 10.

Table 60. Stevfix Anchors with Mud Adaptor [1]

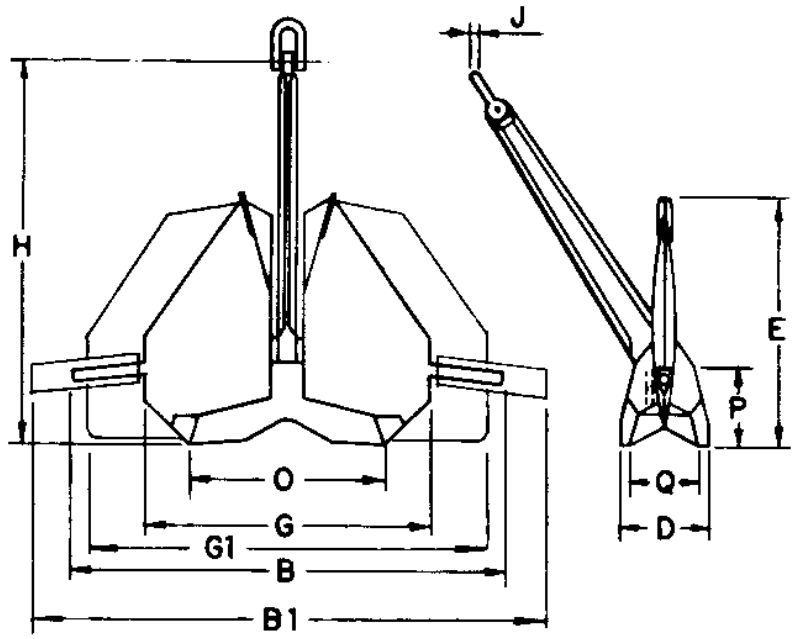

BASIC ANCHOR WEIGHT (LBS.)	DIMENSIONS IN INCHES										
	B	B1	D	E	G	G1	H	J	O	P	Q
2,200*	120	152	29	66	76	98	98	2-9/16	49	24	19
3,300*	138	173	33	75	87	112	112	2-15/16	56	27	21
6,600*	173	218	42	94	109	141	140	3-9/16	70	34	27
11,000*	205	259	49	112	129	168	167	3-15/16	83	40	32
15,400*	230	290	55	125	145	188	187	4-3/4	93	45	36
19,850*	250	315	60	136	157	204	203	5-1/8	101	49	39
26,450*	275	347	66	150	173	225	223	5-1/2	112	54	43
33,100*	296	374	71	162	186	242	241	5-7/8	120	58	46
44,100*	326	412	78	178	205	267	264	6-11/16	132	64	51
66,150*	372	471	89	204	235	305	303	7-7/8	151	73	58

*DOES NOT INCLUDE WEIGHT OF ADAPTER. WEIGHT OF ANCHOR WITH ADAPTER IS APPROXIMATELY 140% OF THIS VALUE.

[1] Data provided by Vrijhof Ankers B.V. For markings and general notes, see Table 10. This table is included for informational purposes. Use of this type anchor is NOT authorized until holding power ratios have been established by the Civil Engineering Laboratory.

Table 61. Stevmud Anchors [1]

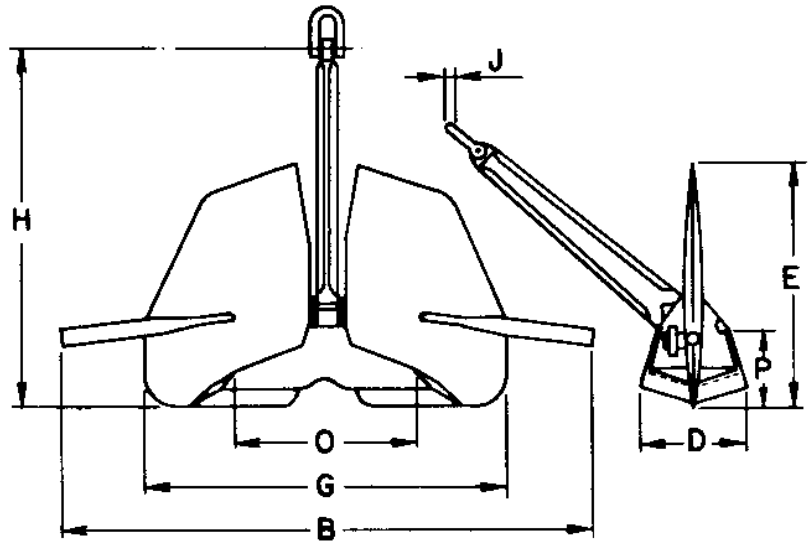

ANCHOR WEIGHT (LBS.)	DIMENSIONS IN INCHES							
	B	D	E	G	H	J	O	P
2,200	140	30	65	93	94	2-9/16	57	22
6,600	202	43	94	135	135	3-9/16	82	32
11,000	239	51	111	160	160	3-15/16	97	39
15,400	267	57	124	179	179	4-3/4	108	43
19,850	291	62	135	194	195	5-1/8	118	47
26,450	320	68	149	214	214	5-1/2	130	52
33,100	345	73	160	230	231	5-7/8	140	56
44,100	379	81	176	253	254	6-11/16	154	61
66,150	434	93	202	290	291	7-7/8	176	70

[1]Data provided by Vrijhof Ankers B.V. For markings and general notes, see Table 10.

Table 62. Stevdig Anchors [1]

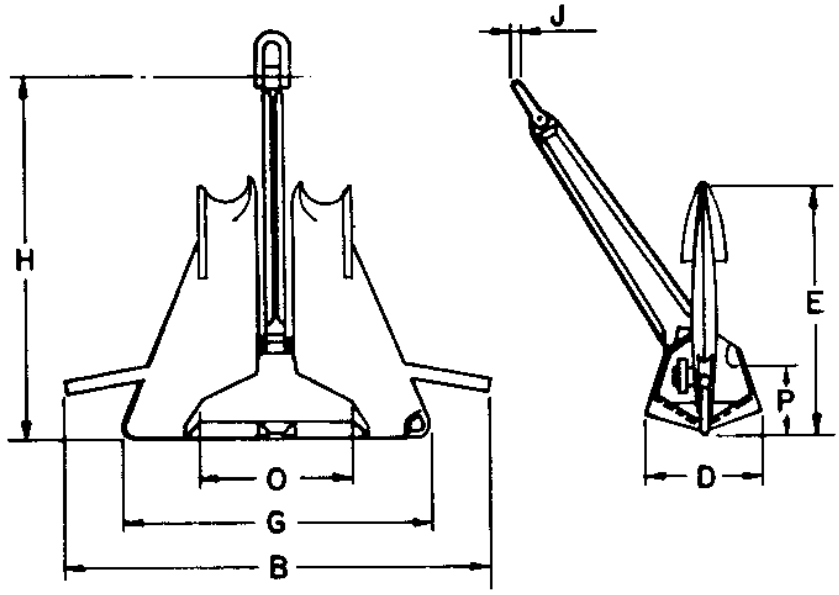

ANCHOR WEIGHT (LBS.)	DIMENSIONS IN INCHES							
	B	D	E	G	H	J	O	P
2,200	104	30	61	76	91	2-9/16	38	16
3,300	119	34	70	87	104	2-15/16	43	19
6,600	150	43	88	109	131	3-9/16	55	23
11,000	178	50	104	130	155	3-15/16	65	28
15,600	199	56	116	145	174	4-3/4	72	31
19,850	217	61	127	157	189	5-1/8	79	34
26,450	238	68	139	179	208	5-1/2	87	37
33,100	257	73	150	187	224	5-7/8	93	40
44,100	282	80	165	206	247	6-11/16	103	44
66,150	323	92	189	235	282	7-7/8	118	51

[1]Data provided by Vrijhof Ankers B.V. For markings and general notes, see Table 10. This table is included for informational purposes. Use of this type anchor is NOT authorized until holding power ratios have been established by the Civil Engineering Laboratory.

Table 63. Hook Anchors [1]

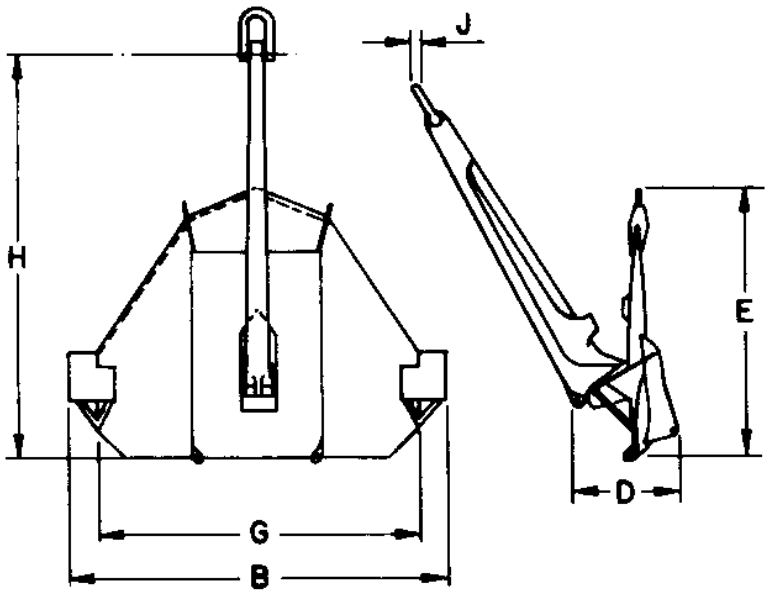

ANCHOR WEIGHT (LBS.)	DIMENSIONS IN INCHES					
	B	D	E	G	H	J
22,050	215	51	155	182	234	5-1/2
27,550	232	54	167	196	252	5-7/8
33,100	246	58	178	209	268	6-5/16
44,100	271	64	195	230	295	7-1/16
55,100	292	69	210	248	318	7-1/2
66,150	310	73	224	263	337	8-1/16
77,150	327	77	235	277	355	8-7/16
88,200	342	80	246	290	371	8-7/8
110,250	368	86	265	312	400	9-5/8
132,300	391	92	282	332	425	10-1/4

[1] Data provided by Vrijhof Ankers B.V. For markings and general notes, see Table 10.

Table 64. Hook Anchors with Auxiliary Shank Fluke[1]

(Future Manual Change)

[1] This table is included for informational purposes. Use of this type anchor is NOT authorized until holding power retios have been established by the Civil Engineering Laboratory.

Table 65. Mark-2 Anchors [1]

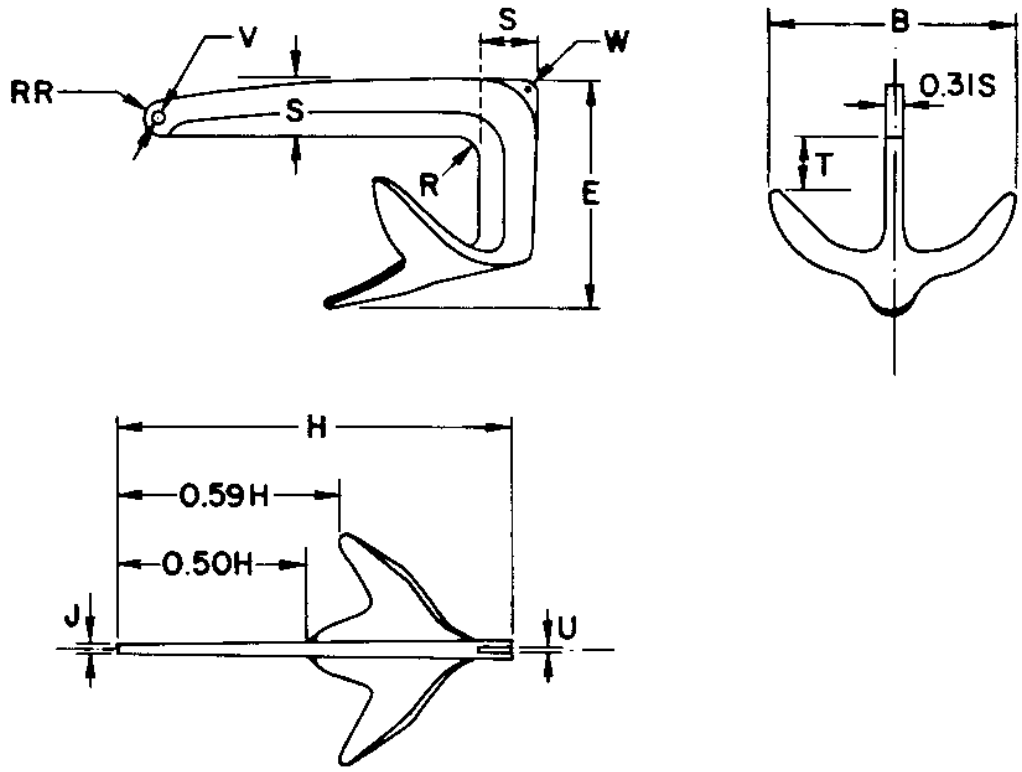

ANCHOR WEIGHT (LBS.)	DIMENSIONS IN INCHES										
	B	E	H	J	R	RR	S	T	U	V	W
2,200	64	53	94	2-1/2	8	2-13/16	14	13	2-1/16	2-1/8	1-13/16
4,400	81	67	119	3-5/16	10	3-9/16	17	17	2-3/8	2-5/8	2-1/8
6,600	93	76	136	3-5/8	11-1/2	4-1/8	20	19	2-3/4	2-15/16	2-3/8
14,350	121	100	178	4-15/16	15	5-3/8	26	25	3-5/8	3-15/16	2-15/16
19,850	133	110	197	5-1/2	16-1/2	5-15/16	29	27	3-5/8	4-1/2	2-15/16

[1] Data provided by Bruce International Ltd. For markings and general notes, see Table 10.

Table 66. TS Anchors [1]

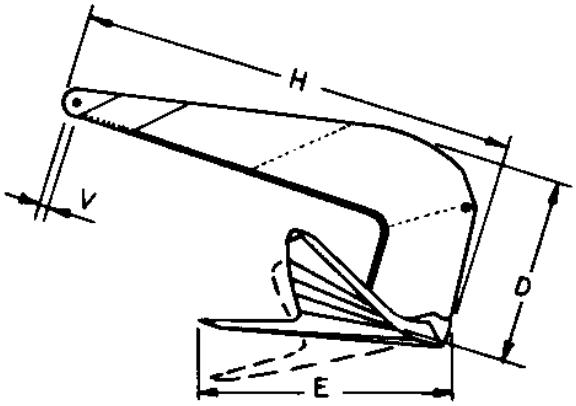

ELEVATION

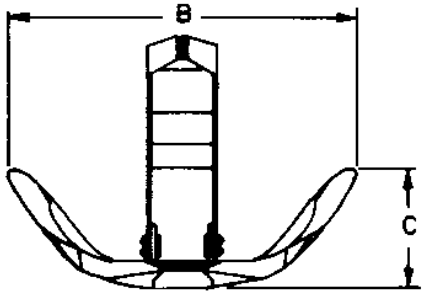

END VIEW

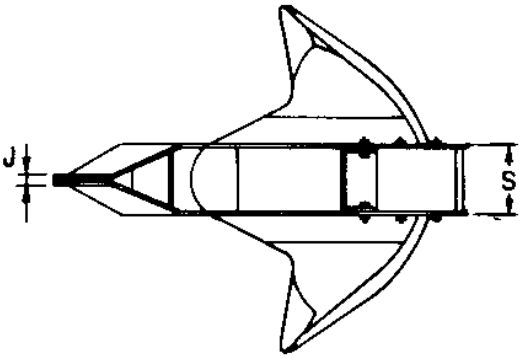

PLAN

ANCHOR WEIGHT (LBS.)	DIMENSIONS IN INCHES							
	B	C	D	E	H	J	S	V
550	52	18	27	38	65	2-1/16	10-1/2	1-7/16
1,100	65	22	34	48	81	2-7/16	13	1-13/16
1,650	73	25	37	54	91	2-7/16	14-1/2	1-13/16
2,200	80	27	42	59	100	2-15/16	16	2-1/16
3,300	92	31	50	67	115	3-7/16	18-1/2	2-5/16
4,400	101	34	53	74	126	3-15/16	20-1/2	2-9/16
5,500	109	37	57	80	136	4-5/16	22	2-15/16
6,600	116	39	61	85	145	4-5/16	23-1/4	2-15/16
8,800	127	43	67	93	159	4-13/16	25-1/2	3-3/16
11,000	137	46	72	101	172	4-15/16	27-1/2	3-7/16
15,450	153	52	81	113	192	5-7/8	31	3-15/16
19,850	167	56	88	122	209	6-5/16	33-1/2	4-7/16
26,450	184	62	97	135	230	6-5/16	37	4-7/16
33,050	198	67	104	145	248	6-5/16	39-3/4	4-7/16
44,100	218	74	115	160	273	6-13/16	43-3/4	4-15/16
55,100	234	79	123	172	294	6-13/16	47-1/4	4-15/16

[1] Data provided by Bruce International Ltd. For markings and general notes, see Table 10. This table is included for informational purposes. Use of this type anchor is NOT authorized until holding power ratios have been established by the Civil Engineering Laboratory.

Table 67. Cable or Chain Depressor [1]

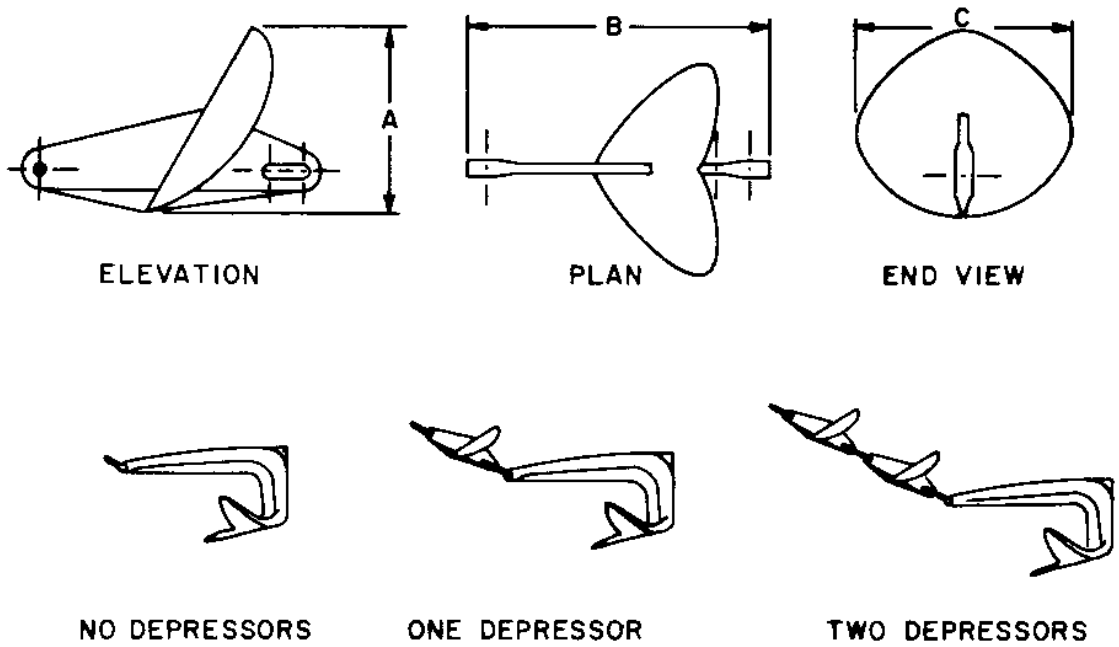

ANCHOR WEIGHT (LBS.)	DEPRESSOR WEIGHT (LBS.)	DIMENSIONS IN INCHES		
		A	B	C
2,200	440	28	47	33
4,400	-	-	-	-
6,600	1,330	41	68	47
14,350	2,970	53	89	61
19,850	3,980	59	98	68

[1] Data provided by Bruce International Ltd. For markings and general notes, see Table 10. This table is included for informational purposes. Use of this type accessory is NOT authorized until anchor and accessory holding power ratios have been established by the Civil Engineering Laboratory.

Table 68. Chaseable Cable or Chain Depressor [1]

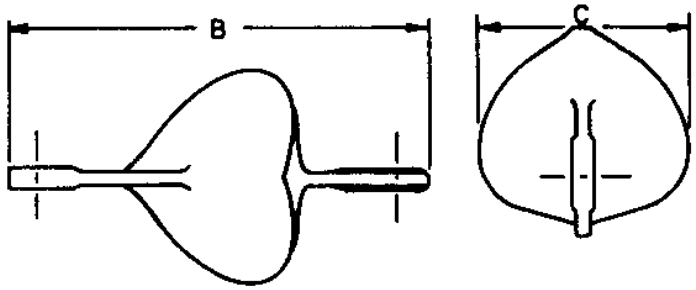

PLAN END VIEW

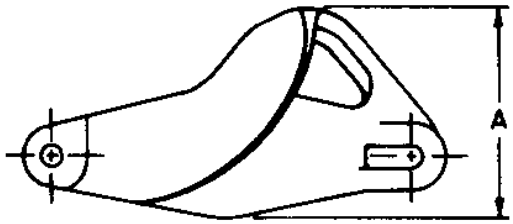

ELEVATION

ANCHOR WEIGHT (LBS.)	DEPRESSOR WEIGHT (LBS.)	DIMENSIONS IN INCHES		
		A	B	C
14350	1650	37	74	38

[1] Data provided by Bruce International Ltd. For markings and general notes, see Table 10. This table is included for informational purposes. Use of this type accessory is NOT authorized until anchor and accessory holding power ratios have been established by the Civil Engineering Laboratory.

Table 69. Chase for Anchor Retrieval [1]

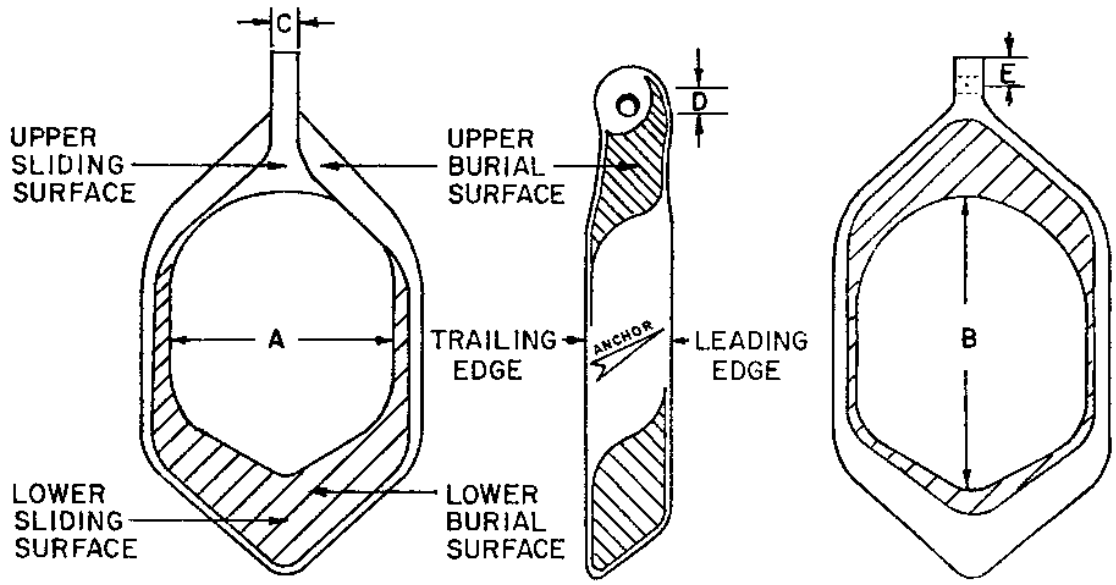

REAR VIEW SIDE VIEW FRONT VIEW

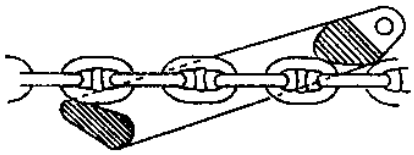

SMOOTH NEGOTIATION OF CHAIN

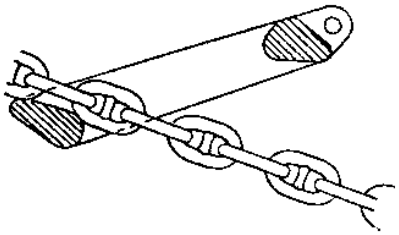

NEGOTIATION OF DEEPLY BURIED CHAIN

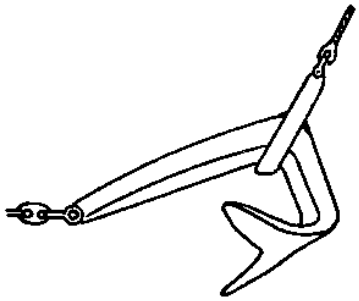

EASE OF ANCHOR RETRIEVAL

DIMENSIONS IN INCHES

A	B	C	D	E
$39\frac{3}{8}$	$46\frac{7}{8}$	$4\frac{15}{16}$	$3\frac{7}{8}$	$5\frac{7}{8}$

[1] Data provided by Bruce International Ltd. For markings and general notes, see Table 10. This table is included for informational purposes. Use of this type accessory is NOT authorized until anchor and accessory holding power ratios have been established by the Civil Engineering Laboratory.

5. Buoys. The following tables present dimensions and characteristics of a variety of foam-filled buoys. These buoys can be used as marker and mooring buoys.

There are two types of buoys described herein -- tension bar types and hawsepipe types. The tension bar type has a structural member (i.e., the tension bar) which passes through the body of the buoy. The anchor line is connected to one end and is always submerged when no lifting load is applied. Mooring lines are attached to the other end of the tension bar which becomes oriented in a near-vertical manner due to the weight of the anchor line. For the hawsepipe type, the tension bar is replaced by a hawsepipe (chain tube) which allows passage of the anchor chain through the buoy.

Table 70. Spherical Marker or Mooring Buoy [1]

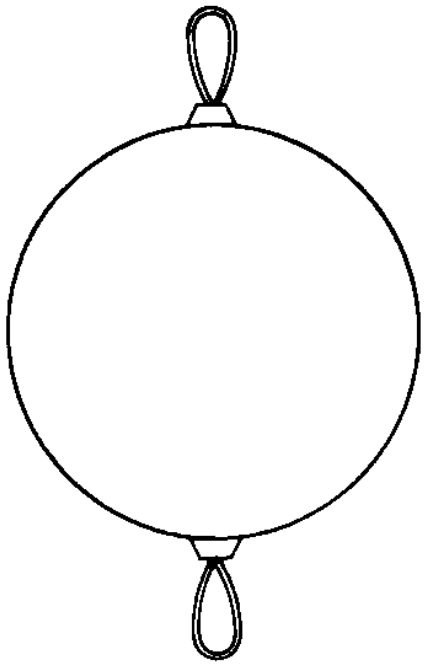

Weight.....270 lbs
Dimensions.....40 Inches Diameter
Net Buoyancy.....1240 lbs
Surface Visibility.....23 sq ft.
Hull Construction.....1/8" Fiberglass reinforced polyester resin
Foam Filling.....4 lbs/ft^3 Closed cell polyurethane
Color.....International orange

[1] Data provided by Tideland Signal Corp.

Table 71. Spherical Marker or Mooring Buoy [1]

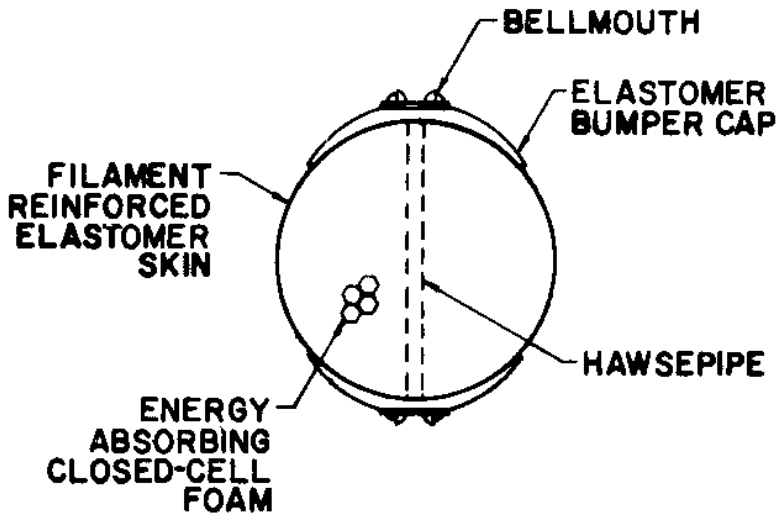

HAWSEPIPE TYPE

DIAMETER (FEET)	WEIGHT IN AIR (LBS.)	RESERVE BUOYANCY (LBS.)
6.0	1,500	5,500
7.0	2,200	9,000
8.0	2,900	14,000
9.0	3,900	20,000
10.0	5,000	28,000

[1] Data provided by Seaward International Co.

Table 72. Spherical Marker or Mooring Buoy [1]

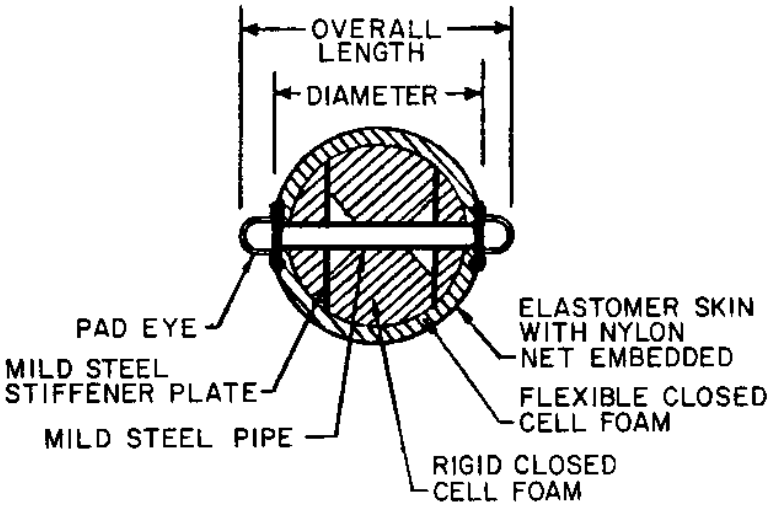

DIAMETER (FEET)	OVERALL LENGTH (FEET)	WEIGHT IN AIR (LBS.)	RESERVE BUOYANCY (LBS.)	MANUF. PART NO.
2.50	4.50	75	500	SB5
3.25	5.25	150	1,000	SB10
3.75	5.75	205	1,500	SB15
4.20	6.20	290	2,000	SB20
4.40	6.40	350	2,500	SB25
4.75	6.75	395	3,000	SB30
5.20	7.20	470	4,000	SB40
5.60	7.60	605	5,000	SB50
5.90	7.90	750	6,000	SB60

[1]Data provided by Samson Ocean Systems, Inc.

Table 73. Tension Bar Mooring Buoys [1]

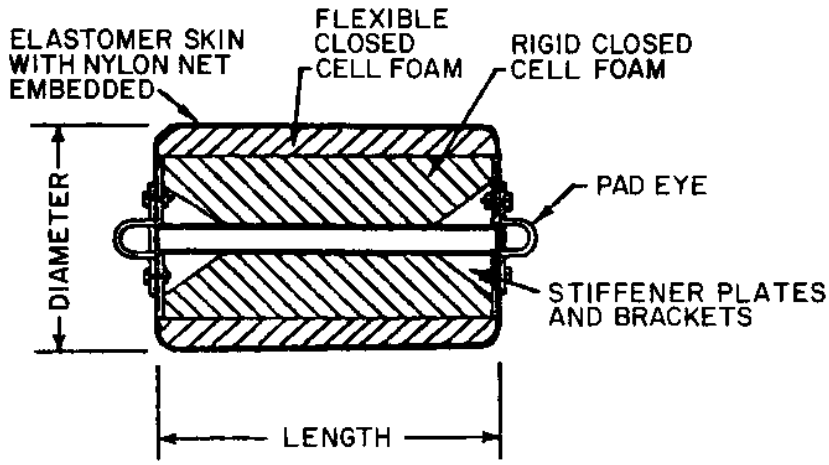

DIAMETER (FEET)	HEIGHT OR LENGTH (FEET)	WEIGHT IN AIR (LBS.)	RESERVE BUOYANCY (LBS.)	MANUF. PART NO.
2.00	4.0	200	500	CB5
2.50	4.0	250	1,000	CB10
3.00	4.0	310	1,500	CB15
3.50	4.0	460	2,000	CB20
4.00	4.5	600	3,000	CB30
4.00	6.0	825	4,000	CB40
4.50	6.0	1000	5,000	CB50
5.00	6.0	1150	6,000	CB60
5.50	6.5	1350	8,000	CB80
5.75	6.5	1625	10,000	CB100
6.00	8.0	2475	12,000	CB120

[1]Data provided by Samson Ocean Systems, Inc.

Table 74. Tension Bar Mooring Buoys [1]

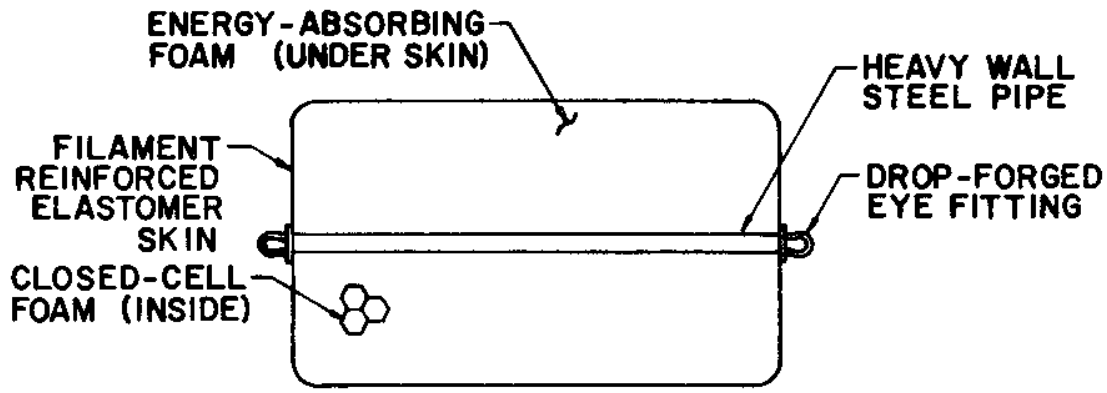

DIAMETER (INCHES)	HEIGHT OR LENGTH (INCHES)	OVERALL LENGTH (INCHES)	WEIGHT IN AIR (LBS.)	RESERVE BUOYANCY (LBS.)	PICK-UP LOAD RATING (LBS.)	PICK-UP EYE I.D. (INCHES)
20	30	40-3/8	40	300	5,000	2-1/4
24	36	47-7/8	70	500	7,500	2-1/2
29	48	61-7/8	140	1,000	10,000	3-1/8
37	59	79-3/8	280	2,000	20,000	4
50	81	102	700	5,000	40,000	4

[1] Data provided by Seaward International Co.

Table 75. Hawsepipe and Tension Bar Mooring Buoys [1]

TENSION BAR TYPE

DIAMETER (LBS.)	LENGTH (FEET)	WEIGHT IN AIR (LBS.)	RESERVE BUOYANCY (LBS.)	MANF. PART NO.
5.75	8.0	1,900	11,400	PB11
6.50	9.0	2,700	16,400	PB16
7.25	10.0	3,400	23,000	PB23
8.00	11.0	3,800	30,000	PB30
8.75	13.0	5,000	40,000	PB40

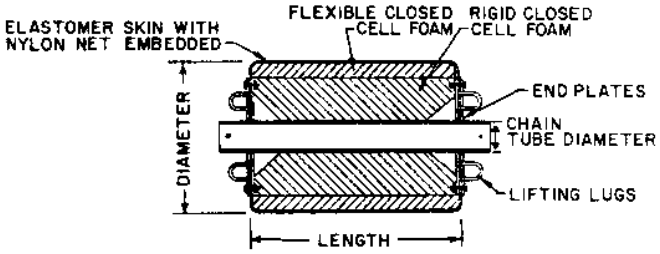

HAWSEPIPE TYPE

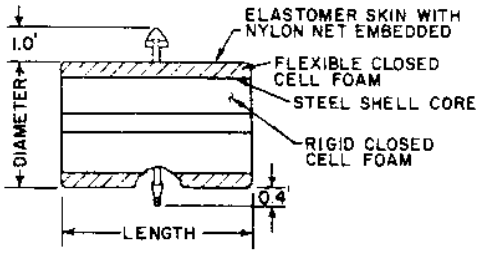

TENSION BAR TYPE

HAWSEPIPE TYPE

DIAMETER (FEET)	HEIGHT OR LENGTH (FEET)	WEIGHT IN AIR (LBS.)	RESERVE BUOYANCY (LBS.)	HAWSEPIPE INSIDE DIA (INCHES)	MANF. PART NO.
3.60	5.5	305	2,000	14	HB20
4.25	5.5	360	3,000	14	HB30
4.50	6.2	500	4,000	14	HB40
4.85	7.5	1,400	5,000	16	HB50
5.00	8.0	1,575	6,000	16	HB60
5.00	8.5	1,700	8,000	19	HB80
6.00	10.0	3,350	10,000	25	HB100
6.00	12.0	3,800	12,000	30	HB120

[1] Data provided by Samson Ocean Systems, Inc.

Table 76. Hawsepipe and Tension Bar Mooring Buoys [1]

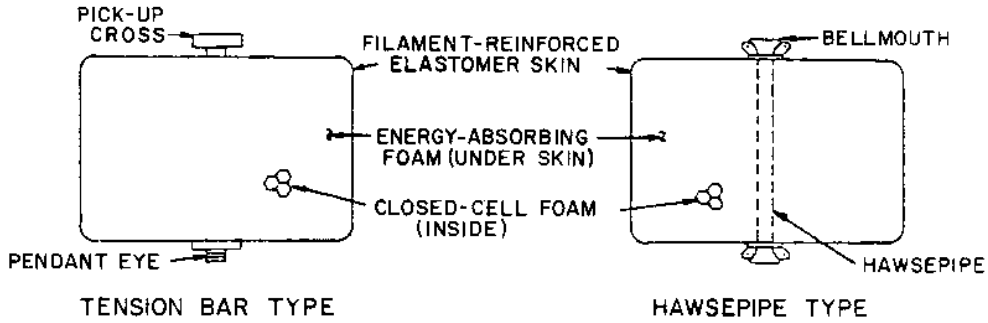

DIAMETER (FEET)	HEIGHT OR LENGTH (FEET)	WEIGHT IN AIR (LBS.)	RESERVE BUOYANCY (LBS.)	PICK-UP LOAD RATING (LBS.) TENSION BAR TYPE
5.4	8.0	1,500	10,000	10,000
6.2	9.2	2,000	15,000	15,000
6.8	10.1	2,500	20,000	20,000
7.7	11.5	3,300	30,000	30,000
8.4	12.6	4,000	40,000	40,000
9.1	13.5	5,000	50,000	50,000

[1] Data provided by Seaward International Co.

6. Sinkers. There are very few organizations which fabricate concrete sinkers. Their simplicity of design and construction makes them very easy to fabricate. The main concerns are (a) provision of a suitable connection which is securely embedded in the sinker and (b) use of a durable concrete mix which provides the required weight.

Besides concrete, cast iron can be used as a construction material. Cast iron is more homogeneous, hence it is more durable. Cast iron sinkers, used more often than concrete sinkers as substitutes for anchors, act through gravity rather than through embedment and pull-out resistance in the soil.

Table 77. Concrete Sinkers [1]

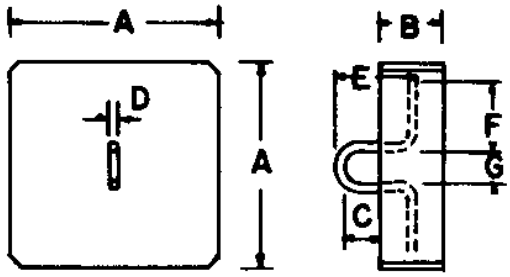

WEIGHT (LBS.)	DIMENSIONS IN INCHES						
	A	B	C	D	E	F	G
1,000	35	10	4	3/4	10	12	3-1/2
2,000	45	12	4	1	11	14	3-1/2
5,000	57	18	5	1-5/8	16	18	4

[1]Data provided by Automatic Power, Inc.

SECTION 5. STANDARD RISER-TYPE MOORING SYSTEMS

1. Mooring System Selection. The selection of a standard riser-type mooring to secure an expected range of vessels at a specific site is based on the "maximum mooring line load" of each vessel. The maximum of these loads is the required minimum holding power of the class of mooring that should be selected. It should be remembered that a mooring may be used by a variety of vessels. Hence, the loads it will have to sustain will vary for each vessel even if environmental conditions remain constant.

Selection of the proper riser-type mooring is accomplished in two steps:

STEP 1: The "design mooring line load" is used to select the class of mooring which has components and geometry capable of sustaining this load.

STEP 2: Select the appropriate type and number of anchors based on:

- type of bottom
- class of mooring.

2. Anchor Selection. The selection of an anchor which would be suitable for the selected class of mooring requires a certain amount of engineering judgment. Consideration, should first be given to the types of anchors which may be used at a given site. Some sites are not ideally suited to the use and installation of sediment anchors. In some locations, the sea bottom may dictate the use of stake piles (see DM-7), gravity weights, or propellant embedment anchors to achieve the rated holding power. Also, for twin ground leg moorings in which anchors are not dragged when set, accurate placement is critical so as not to cause the entire mooring load to go only into one of the two ground legs.

The sizing of the selected anchor types to provide the necessary holding power also requires considerable judgment. This is due to the lack of information and consistently reliable test data concerning anchor behavior. It is also due to the concept of measuring anchor efficiency merely as the ratio of the anchor’s in-service holding power and its weight. However, at the present time, this is the most convenient and universally accepted means of evaluating different types of anchors under similar conditions and comparing their performance in relation to one another.

The determination of an anchor’s in-service holding power is a function of many of the following parameters and their interaction:

- the nature of the soil and kinematic behavior of the anchor in it,
- weight and geometry of the anchor,
- opening of the flukes,
- penetration of the flukes,
- burial depth of the anchor,
- stability of the anchor during dragging,
- additional holding capacity afforded by buried chain of the ground leg, and
- nature and direction of the applied load.

Table 78 lists the holding power-to-anchor weight ratios for an assortment of anchor types and bottom conditions. These recommended ratios were established based on anchor field tests performed by the Civil Engineering Laboratory, Naval Construction Battalion Center, Port Hueneme, California. The engineer should anticipate considerable scatter in test results because test conditions cannot be controlled in a nonhomogeneous medium such as soil. To date, an insufficient sampling of test results has been obtained to permit the establishment of a holding power-to-weight ratio which would be representative of a 90 percent probability (assuming a normal distribution for test data) that an anchor will achieve a minimum holding power. DM-26.5 presents additional information about anchors.

IMPORTANT: When anchors are selected for a specific class of mooring, their required holding power should be the rated capacity of the selected mooring class, not the design mooring load of the moored vessel. In this way, the entire system will have a balanced design and the anchors will not cause the mooring’s capacity to be less than its nominal value. This concept assumes that the design mooring load will be less than the rated capacity of the class of mooring (this is the proper practice).

Table 78. Holding Power to Weight Ratios of Various Anchors[1]

HOLDING POWER AND TYPE OF BOTTOM			
ANCHOR[2]	SAND	MUD/SILT	HARD/DENSE SOIL
U.S. Navy Stock1ess	4.5[3]	3[3]	--
U.S. Navy Lightweight	10	3	--
U.S. Navy Stato[4]	20[5]	15[5]	15[5]
Danforth	10	3	--
Stock Anchor Type[1] (Off drill II)	13.5	9	--
Moorfast	10	7	--
Boss	20	15	15[5]
Flipper Delta	15	12	15
Stevin	17	12[6]	15
Stevfix	20	--	20
Stevmud	--	19	--
Hook	--	18	10
Mark-2 (Cast)	20	--	--

[1] The anchor holding power ratios are intended for use with conventional anchor weights up to 30,000 lbs only; heavier conventional anchors may possess lower holding power to weight ratios. The holding power ratios represent values established by field tests performed by the Civil Engineering Laboratory, Naval Construction Battallon Center, Port Hueneme, California, and are based on efficiencies achieved during maximum permissible drag of 50 feet. Higher holding power ratios may be achieved by some anchors during longer drags. The holding power ratios do not apply where anomalous seafloor conditions exist; erratic or unsatisfactory anchor performance is experienced under conditions such as layered seafloors (soft sediment over stiff/dense sediment or vice versa), gravely (glaciated) seafloors, thin sediment layer above rock, and unconsolidated clays with cohesion to pressure ratios less than 0.15.

[2] For weight ranges and dimensional characteristics of anchors and appurtenances, see Tables in Sections 4 and 6.

[3] The flukes should be restricted to a 35 deg angle opening in sand and fixed fully open in mud.

[4] Values indicated are for fabricated (welded) anchors only. They should not be applied to cast anchors.

[5] Only with fluke angle reduced to 32 degrees and with stabillizers lengthened by 35%.

[6] In very soft bottoms this anchor should be installed without the retrieving wire rope pendant attached to the corner eye opening in one of the flukes. This pendant may cause a dissymmetric strain leading to anchor instability and overturning resulting in a major loss of holding power.

3. Classes of Moorings Without Sinkers. The tables and illustrations which follow describe the configurations and components of standard riser-type moorings of the following classes:

Class	Previous Class	Holding Power (lbs)	Number of Ground Legs	Type of Chain Throughout
AAA	None	500,000	3 (twin chain)	A.B.S. Grade 3 Stud Link
BBB	None	350,000	3 (twin chain)	A.B.S. Grade 2 Stud Link
AA	A-A	300,000	3 (twin chain)	U.S. Navy Common A-Link
BB	B-B	250,000	3 (twin chain)	U.S. Navy Common A-Link
CC	C-C	200,000	3 (twin chain)	U.S. Navy Common A-Link
DD	D-D	175,000	3 (single chain)	U.S. Navy Common A-Link
A	A	150,000	3 (single chain)	U.S. Navy Common A-Link
B	B	125,000	3 (single chain)	U.S. Navy Common A-Link
C	C	100,000	3 (single chain)	U.S. Navy Common A-Link
D	D	75,000	3 (single chain)	U.S. Navy Common A-Link
E	E	50,000	3 (single chain)	U.S. Navy Common A-Link
F	F	25,000	3 (single chain)	U.S. Navy Common A-Link
G	G	5,000	3 (single chain)	U.S. Navy Common A-Link

The factor of safety against chain failure in all of these moorings is approximately 4. If U.S. Navy Common A-Link chain is not available, A.B.S. Grade 2 Stud Link chain is an acceptable substitute over all or part of a mooring. However, the dimensions of the fittings should always be checked to ensure the proper fit.

A new type of chain, comparable to A.B.S. Grade 3 stud link chain and designated U.S. Navy FM3 stud link chain, has been designed to accept sacrificial anodes for cathodic protection to provide extra longevity to moorings.

NOTES

In special situations, other fittings (than those shown) may be necessary to connect the anchor and ground chain if the swivel shackle is the wrong size for the anchor's shackle.

REFERENCES

Title	Reference
Bills of Materials	Table 79
Chain Set Assembly for Basic Depth	Table 80
Lengths of Ground Chain between Anchor and Spider for Various Water Depths	Table 81
Chain Set Assemblies for Depths greater than Basic	Table 82
Buoy Details	NAVFAC dwg 1404065
Chain and Fitting Details	Sections 4 and 6
Anchor Details	Sections 4, 5, and 6

CLASS	CHAIN & FITTINGS
AAA	ABS GRADE 3
BBB	ABS GRADE 2

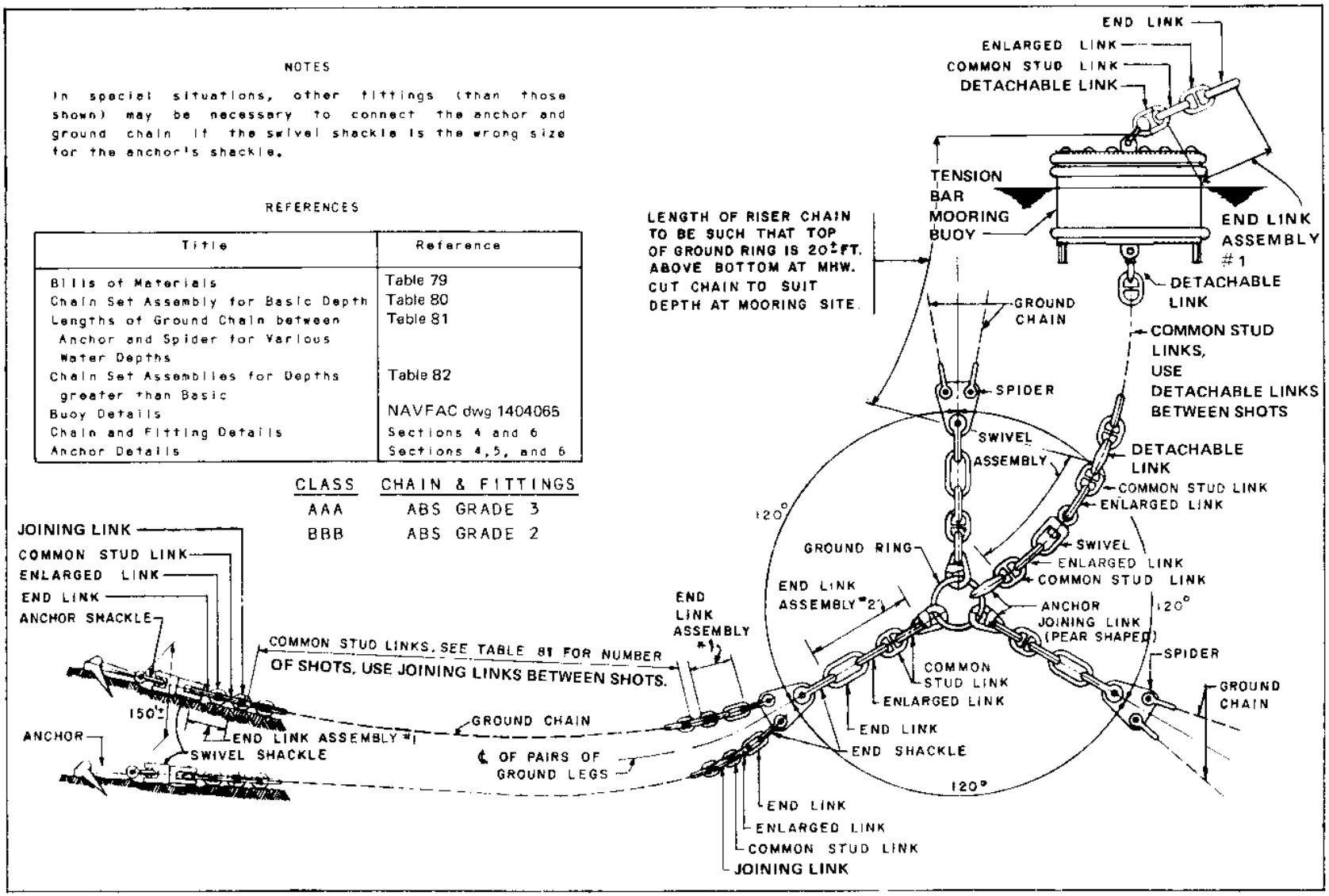

Figure 1.
Free-Swinging, Riser-Type Mooring Without Sinkers – Classes AAA and BBB (Proposed)

Classes AAA and BBB (Proposed)]

26.6-167

NOTES

In special situations, other fittings (than those shown) may be required to connect the anchor and ground chain if the anchor connecting link is the wrong size for the anchor's shackle.

REFERENCES

Title	Reference
Bills of Materials	Table 79
Chain Set Assembly for Basic Depth	Table 80
Lengths of Ground Chain Between Anchor and Spider for Various Water Depths	Table 81
Chain Set Assemblies for Depths greater than Basic	Table 82
Buoy Details	NAVFAC dwg 620,605
Chain and Fitting Details	Sections 4 and 6
Anchor Details	Sections 4,5, and 6

ALL CHAIN IS U.S. NAVY COMMON A-LINK

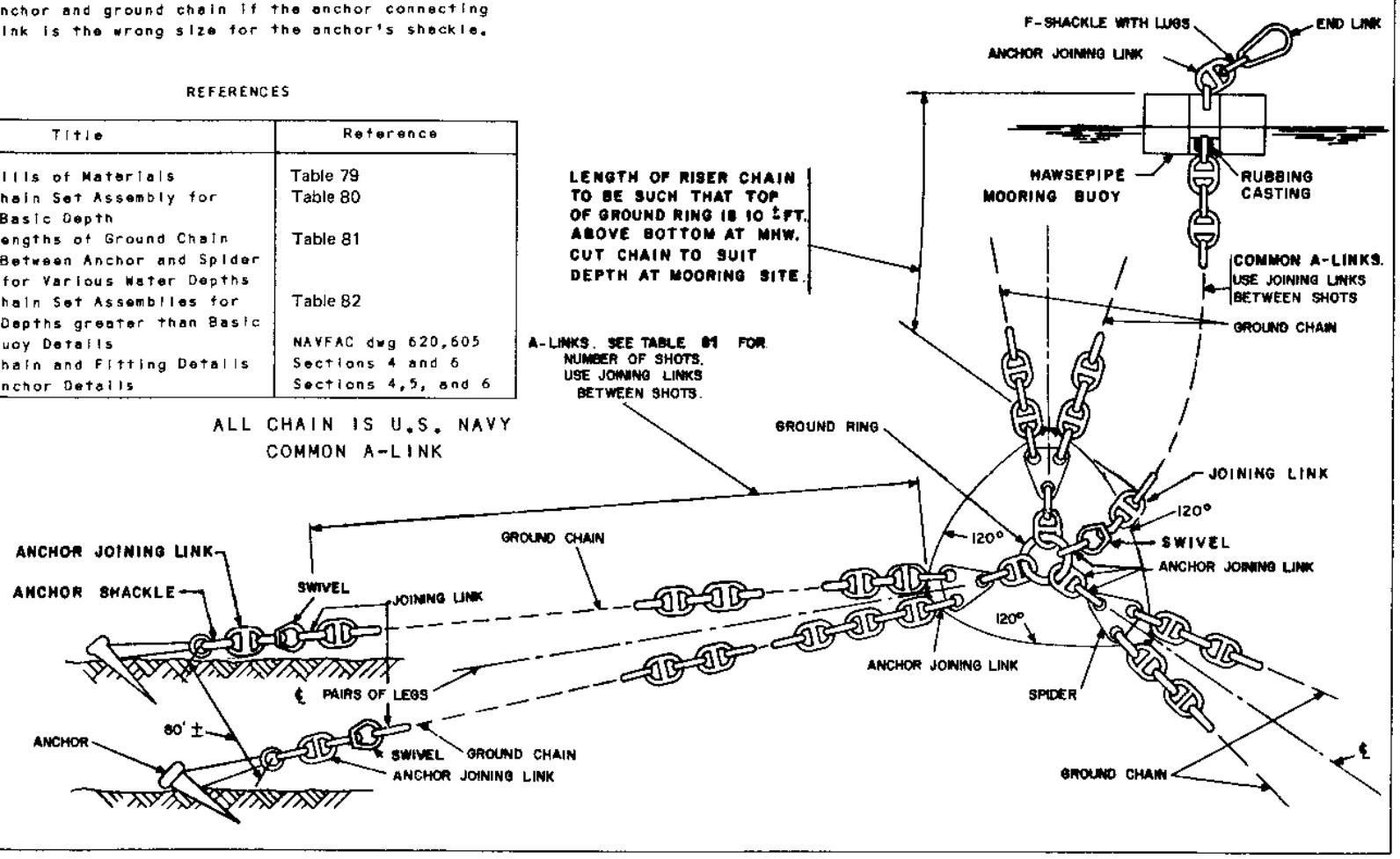

Figure 2 . Free-Swinging, Riser-Type Mooring Without Sinkers — Classes AA, BB, and CC

Classes AA, BB, AND CC]

26.6-168

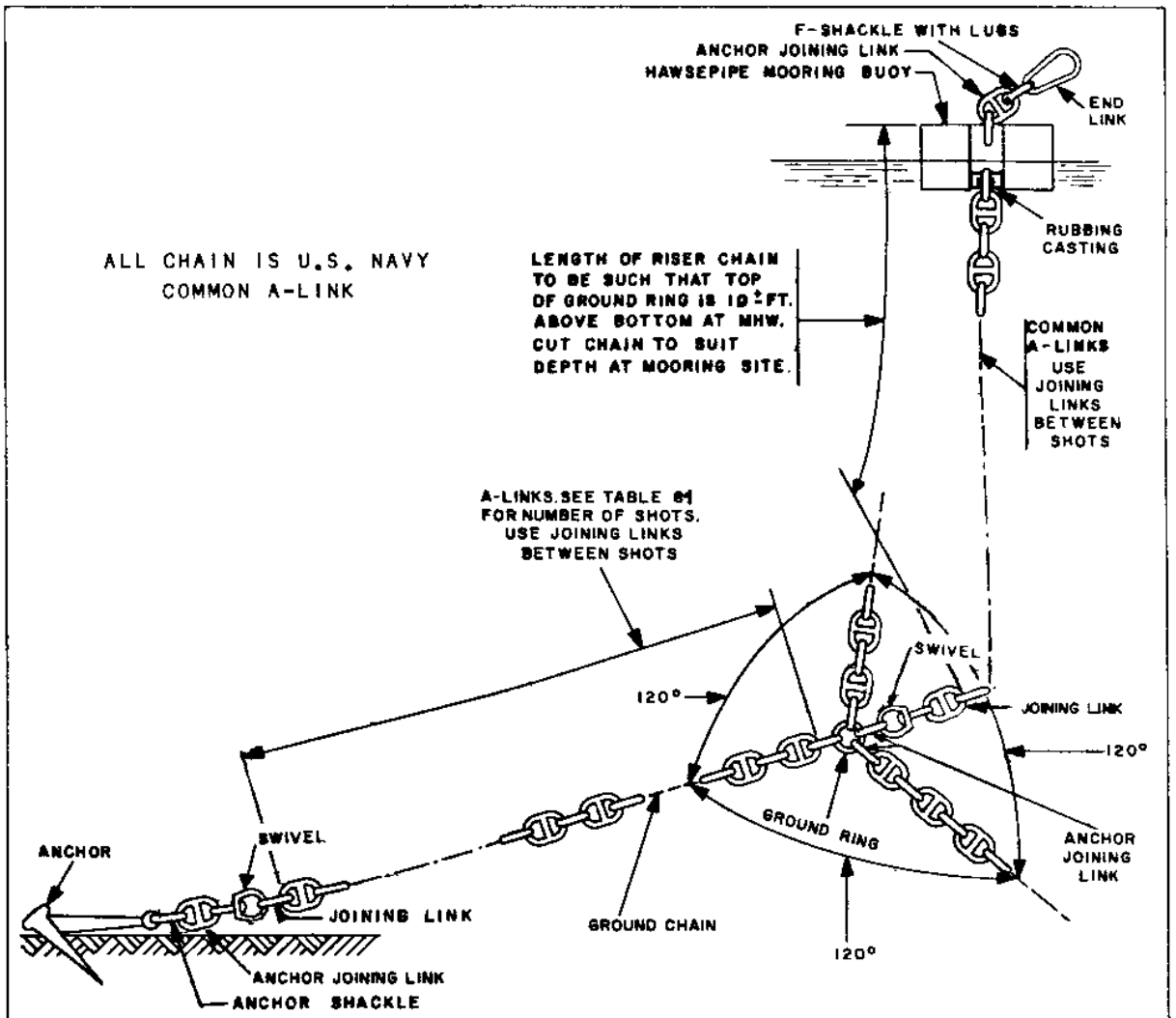

NOTES

In special situations, other fittings (than those shown) may be required to connect the anchor and ground chain if the anchor connecting link is the wrong size for the anchor's shackle.

REFERENCES

Title	Reference
Bills of Materials	Table 79
Chain Set Assembly for Basic Depth	Table 80
Lengths of Ground Chain between Anchor and Ground Ring for Various Water Depths	Table 81
Chain Set Assemblies for Depths greater than Basic	Table 82
Buoy Details	NAVFAC dwg 620,605
Chain and Fitting Details	Sections 4 and 6
Anchor Details	Sections 4,5, and 6

Figure 3 . Free-Swinging, Riser-Type Mooring Without Sinkers — Class DD

Table 79. Moorings Without Sinkers Bills of Materials

Class	AAA (Proposed)		BBB (Proposed)	
Holding Power (lbs)	500,000		350,000	
Basic Depth (ft)	50		50	
Assembly No.	5381		5382	
Description of Item	**Reqd.**	**Size**	**Reqd.**	**Size**
Tension Bar Mooring Buoy	1	dia. hgt. 15'0" x 9'6"	1	dia. hgt. 15'0" x 9'6"
Anchors	6	--[1]	6	--[1]
Chain Set Assembly No.	1	5788	1	5789

Class	AA		BB		CC		DD	
Holding Power (lbs)	300,000		250,000		200,000		175,000	
Basic Depth (ft)	50		50		50		50	
Assembly No.	5377		5378		5379		5380	
Descripton of Item	**Reqd.**	**Size**	**Reqd.**	**Size**	**Reqd.**	**Size**	**Reqd.**	**Size**
Hawsepipe Mooring Buoy	1	dia. hgt. 12'0" x 6'0"	1	dia. hgt. 12'0" x 6'0"	1	dia. hgt. 12'0" x 6'0"	1	dia. hgt. 12'0" x 6'0"
Anchors	6	--[1]	6	--[1]	6	--[1]	3	--[1]
Chain Set Assembly No.	1	5784	1	5785	1	5786	1	5787

[1] For anchor selection procedure, see Introduction to this part.

Table 80. Moorings Without Sinkers Chain Set Assembly for Basic Depth

Mooring Class	AAA (Proposed)			BBB (Proposed)		
Basic Depth (ft.)	50			50		
Chain Set Assembly No.	5788			5789		
Description of Item	Reqd.	Spare[1]	Chain Size	Reqd.	Spare[1]	Chain Size
Riser chain (45 ft.)	1	-	4-1/2	1	-	4-1/2
Ground Chain (90 ft.)[2]	42	-	3	36	-	3
Ground chain (45 ft.)	0	-	3	0	-	3
Ground ring	1	-	4-1/2	1	-	4-1/2
Spider	3	-	-	3	-	-
End link ass. #1	1	-	4-1/2	1	-	4-1/2
End link ass. #1	12	-	3	12	-	3
End link ass. #2	3	-	4-1/2	3	-	4-1/2
Anchor link (pear shaped)	4	1	4-1/2	4	1	4-1/2
Detachable Link	3	1	4-1/2	3	1	4-1/2
Joining Link	48	16	3	42	14	3
End shackle	3	1	4-1/2	3	1	4-1/2
End shackle	6	1	3	6	1	3
Swivel assembly	1	-	4-1/2	1	-	4-1/2
Swivel shackle	6	-	3	6	-	3

Mooring Class	AA			BB			CC			DD		
Basic Depth (ft.)	50			50			50			50		
Chain Set Assembly No.	5784			5785			5786			5787		
Description of Item	Reqd.	Spare[1]	Chain Size	Reqd.	Spare[1]	Chain Size	Reqd.	Spare[1]	Chain Size	Reqd.	Spare[1]	Chain Size
Riser chain (45 ft.)[3]	1	-	4	1	-	3-1/2	1	-	3-1/2	1	-	3
Ground chain (90 ft.)[3]	24	-	2-3/4	24	-	2-1/2	24	-	2-1/4	12	-	3
Ground chain (45 ft.)	6	-	2-3/4	6	-	2-1/2	6	-	2-1/4	3	-	3
Ground ring	1	-	3-1/2	1	-	3-1/2	1	-	3-1/2	1	-	3
Spider	3	-	-	3	-	-	3	-	-	-	-	-
End link	1	-	4	1	-	3-1/2	1	-	3-1/2	1	-	3
F-shackle with lugs	1	1	4	1	1	3-1/2	1	1	3-1/2	1	1	3
Anchor joining link	8	1	4	8	1	3-1/2	8	1	3-1/2	-	-	-
Anchor joining link	12	3	2-3/4	12	3	2-1/2	12	3	2-1/4	8	2	3
Chain joining link[3]	1	2	4	1	1	3-1/2	1	1	3-1/2	-	-	-
Chain joining link[3]	30	10	2-3/4	30	10	2-1/2	30	10	2-1/4	16	6	3
Chain swivel[3]	1	-	4	1	-	3-1/2	1	-	3-1/2	-	-	-
Chain swivel[3]	6	-	2-3/4	6	-	2-1/2	6	-	2-1/4	4	-	3
Rubbing casting	1	-	4	1	-	3-1/2	1	-	3-1/2	1	-	3

[1] Ship to advanced bases for each Assembly regardless of water depth.

[2] Length of each ground leg includes one more shot of chain than that required by catenary configuration at rated load. This extra shot serves to accommodate any temporary load increases due to dynamic forces.

[3] If still in stock, a swivel chain shot of the same size may be substituted in the riser or ground chain for the listed swivel and chain shot. Each swivel chain shot will replace 1 chain shot, 1 swivel, and 1 chain joining link in the Bill of Materials.

Table 81. Moorings Without Sinkers Lengths of Ground Chain Required for Various Water Depths[1]

Depth of Water (ft)	Class (Proposed) AAA[2]	BBB[2]	AA	BB	CC	DD
Basic	7	6	4-1/2	4-1/2	4-1/2	4-1/2
Basic to 50	7	6	4-1/2	4-1/2	4-1/2	4-1/2
50 to 60	7-1/2	6-1/2	5	5	5	5
60 to 70	8	7	5	5-1/2	5-1/2	5
70 to 80	8-1/2	7	5-1/2	5-1/2	5-1/2	5-1/2
80 to 90	9	7-1/2	6	6	6	6
90 to 100	9-1/2	8	6[3]	6-1/2	6-1/2	6
100 to 115	10	8	--	6-1/2	6-1/2	6-1/2
115 to 130	10	8-1/2	--	7[3]	7[3]	7
130 to 145	10-1/2[3]	9[3]	--	--	--	7
145 to 160	--	--	--	--	--	7-1/2
160 to 175	--	--	--	--	--	8
175 to 190	--	--	--	--	--	8[3]

[1] Lengths are 90 ft. shorts. Depth of water is taken at mean high water from a firm botton at anchor locations.

[2] Includes an extra shot of chain to accomodate any temporary load increases due to dynamic forces.

[3] Freeboard limit of 2 ft. reached at this water depth for buoy size indicated in Table 79.

Table 82. Moorings Without Sinkers Chain Set Assemblies for Various Water Depths [1]

Depth of Water (feet)	Class AAA (Proposed)						Class BBB (Proposed)					
	3" chain (90' shot)	3" chain (45' shot)	3" Joining Link	4-1/2" chain (90' shot)	4-1/2" chain (45' shot)	4-1/2" Detachable Link	3" chain (90' shot)	3" chain (45' shot)	3" Joining Link	4-1/2" chain (90' shot)	4-1/2" chain (45' shot)	4-1/2" Detachable Link
Basic to 50	0	0	0	0	0	0	0	0	0	0	0	0
50 to 60	0	6	6	0	0	0	0	6	6	0	0	0
60 to 70	6	0	6	0	0	0	6	0	6	0	0	0
70 to 80	6	6	12	1	-1	0	6	0	6	1	-1	0
80 to 90	12	0	12	1	-1	0	6	6	12	1	-1	0
90 to 100	12	6	18	1	-1	0	12	0	12	1	-1	0
100 to 115	18	0	18	1	-1	0	12	0	12	1	-1	0
115 to 130	18	0	18	1	0	1	12	6	18	1	0	1
130 to 145	18	6	24	1	0	1	18	0	18	1	0	1
145 to 160	-	-	-	-	-	-	-	-	-	-	-	-
160 to 175	-	-	-	-	-	-	-	-	-	-	-	-
175 to 190	-	-	-	-	-	-	-	-	-	-	-	-

Depth of Water (feet)	Class AA						Class BB						Class CC						Class DD		
	2-3/4" chain (90' shot)	2-3/4" chain (45' shot)	2-3/4" joining link	4" chain (90' shot)	4" chain (45' shot)	4" joining link	2-1/2" chain (90' shot)	2-1/2" chain (45' shot)	2-1/2" joining link	3-1/2" chain (90' shot)	3-1/2" chain (45' shot)	3-1/2" joining link	2-1/4" chain (90' shot)	2-1/4" chain (45' shot)	2-1/4" joining link	3-1/2" chain (90' shot)	3-1/2" chain (45' shot)	3-1/2" joining link	3" chain (90' shot)	3" chain (45' shot)	3" joining link
Basic to 50	0	0	0	0	0	0	0	0	0	0	0	0	0	0	0	0	0	0	0	0	0
50 to 60	0	6	6	0	1	1	0	6	6	0	1	1	0	6	6	0	1	1	0	4	4
60 to 70	0	6	6	0	1	1	6	0	6	0	1	1	6	0	6	0	1	1	0	4	4
70 to 80	6	0	6	0	1	1	6	0	6	0	1	1	6	0	6	0	1	1	3	1	4
80 to 90	6	6	12	0	1	1	6	6	12	0	1	1	6	6	12	0	1	1	3	4	7
90 to 100	6	6	12	1	0	1	12	0	12	1	0	1	12	0	12	1	0	1	4	3	7
100 to 115	12	0	12	1	0	1	12	0	12	1	0	1	12	0	12	1	0	1	7	0	7
115 to 130	12	6	18	1	0	1	12	6	18	1	0	1	12	6	18	1	0	1	7	3	10
130 to 145	12	6	18	1	1	2	18	0	18	1	1	2	18	0	18	1	1	2	7	4	11
145 to 160	-	-	-	-	-	-	18	0	18	1	1	2	18	0	18	1	1	2	10	1	11
160 to 175	-	-	-	-	-	-	18	6	24	1	1	2	18	6	24	1	1	2	10	4	14
175 to 190	-	-	-	-	-	-	24	0	24	2	0	2	24	0	24	2	0	2	11	3	14

[1] Add to Basic Depth Assembly (see Table 80) to obtain Assembly for a particular depth. A negative sign denotes removal of that amount from the Basic Assembly.

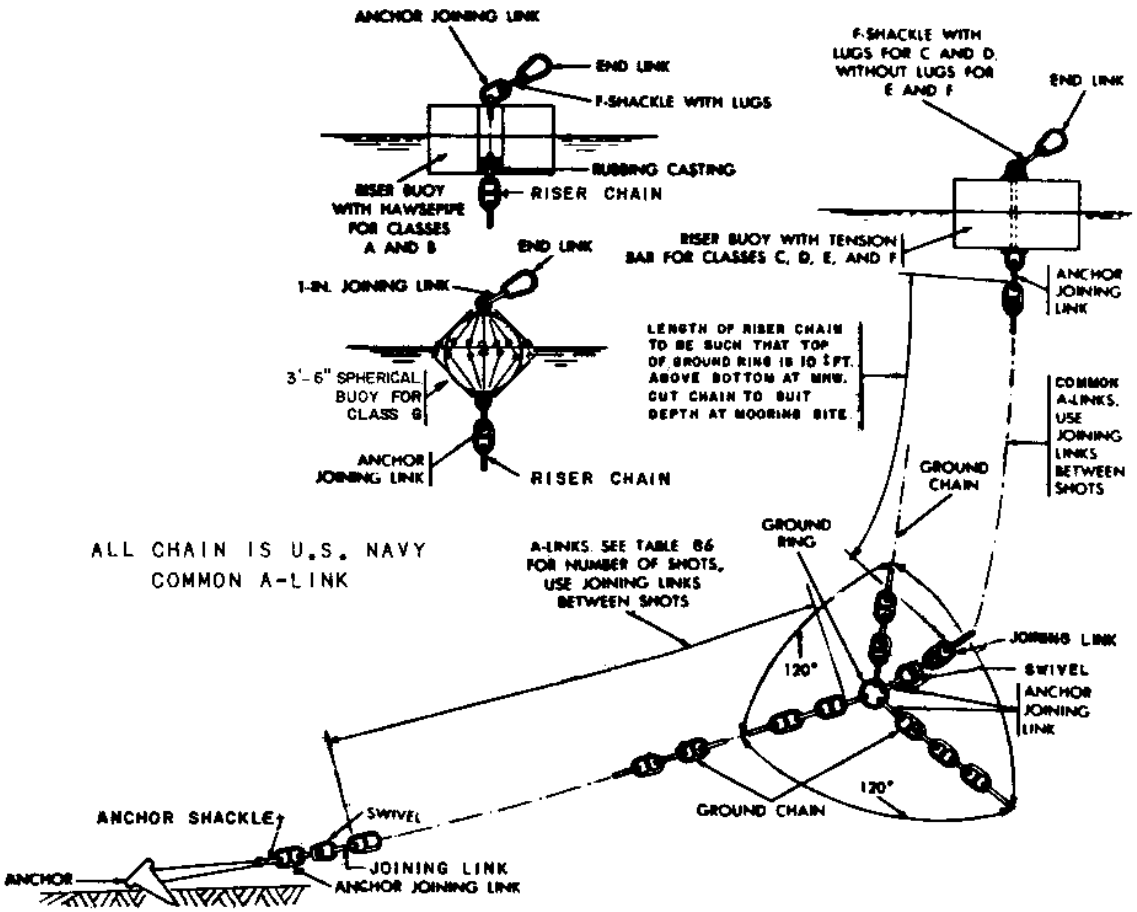

NOTES

In special situations, other fittings (than those shown) may be required to connect the anchor and ground chain if the anchor connecting link is the wrong size for the anchor's shackle.

REFERENCES

Title	Reference
Bills of Materials	Table 83
Chain Set Assembly for Basic Depth	Table 84
Maximum Mooring Depths with Various Buoys	Table 85
Lengths of Ground Chain between Anchor and Ground Ring for Various Water Depths	Table 86
Chain Set Assemblies for Depths greater than Basic	Table 87
Buoy Details - Classes A and B	NAVFAC dwg 620,605
- Classes C,D,E, and F	NAVFAC dwg 620,659
- Class G	NAVFAC dwg 620,662
Chain and Fitting Details	Sections 4 and 6
Anchor Details	Sections 4,5, and 6

Figure 4. Free-Swinging, Riser-Type Mooring Without Sinkers — Classes A, B, C, D, E, F, and G

Classes A, B, C, D, E, F, and G]

Table 83. Moorings Without Sinkers Bills of Materials

Class	A		B		C		D		E		F		G	
Holding Power (lbs)	150,000		125,000		100,000		75,000		50,000		25,000		5,000	
Basic Depth (ft)	50		45		40		35		35		30		25	
Assembly No.	5370		5371		5372		5373		5374		5375		5376	
Description of Item	Reqd	Size	Reqd	Size	Reqd	Size	Reqd	Size	Reqd	Size	Reqd	Size	Reqd	Size
Riser buoy	1	dia 12'0" hgt 6'0"	1	dia 12'0" hgt 6'0"	1	dia 10'6" hgt 6'6"	1	dia 10'6" hgt 6'6"	1	dia 9'6" hgt 5'0"	1	dia 9'6" hgt 5'0"	1	dia 3'6" sphere
Anchors	3	--[1]	3	--[1]	3	--[1]	3	--[1]	3	--[1]	3	--[1]	3	--[1]
Chain Set Assembly No.	1	5777	1	5778	1	5779	1	5780	1	5781	1	5782	1	5783

[1] For anchor selection procedure, see introduction to this part.

Table 84. Moorings Without Sinkers Chain Set Assembly for Basic Depth

Class	A			B			C			D			E			F			G		
Basic Depth (ft.)	50			45			40			35			35			30			25		
Chain Set Assembly No.	5777			5778			5779			5780			5781			5782			5783		
Description of Item	Reqd	Spare[1]	Chain Size	Reqd	Spare[1]	Chain Size	Reqd	Spare[1]	Chain Size	Reqd	Spare[1]	Chain Size	Reqd	Spare[1]	Chain Size	Reqd	Spare[1]	Chain Size	Reqd	Spare[1]	Chain Size
Riser chain (45 ft.)[2]	1	-	2-3/4	1	-	2-1/2	1	-	2-1/4	1	-	2	1	-	1-3/4	1	-	1-1/4	1	-	3/4
Ground chain (90 ft.)[2]	12	-	2-3/4	12	-	2-1/2	12	-	2-1/4	12	-	2	9	-	1-3/4	9	-	1-1/4	9	-	3/4
Ground chain (45 ft.)[2]	3	-	2-3/4	3	-	2-1/2	0	-	2-1/4	0	-	2	3	-	1-3/4	3	-	1-1/4	0	-	3/4
Ground ring	1	-	2-3/4	1	-	2-1/2	1	-	2-1/4	1	-	2	1	-	1-3/4	1	-	1-1/4	1	-	3/4
End link	1	-	2-3/4	1	-	2-1/2	1	-	2-1/4	1	-	2	1	-	1-3/4	1	-	1-1/4	1	-	3/4
F-shackle without lugs	-	-	-	-	-	-	-	-	-	-	-	-	1	1	1-3/4	1	1	1-1/4	-	-	-
F-shackle with lugs	1	1	2-3/4	1	1	2-1/2	1	1	2-1/4	1	1	2	-	-	-	-	-	-	-	-	-
Anchor joining link	8	2	2-3/4	8	2	2-1/2	8	2	2-1/4	8	2	2	8	2	1-3/4	8	2	1-1/4	8	2	3/4
Joining link[2]	16	6	2-3/4	16	6	2-1/2	13	6	2-1/4	13	4	2	13	6	1-3/4	13	6	1-1/4	10	6	3/4
Swivel[2]	4	-	2-3/4	4	-	2-1/2	4	-	2-1/4	4	-	2	4	-	1-3/4	4	-	1-1/4	4	-	3/4
Joining link	-	-	-	-	-	-	-	-	-	-	-	-	-	-	-	-	-	-	1	1	1
Rubbing casting	1	-	2-3/4	1	-	2-1/2	-	-	-	-	-	-	-	-	-	-	-	-	-	-	-

[1] Ship to advanced bases for each Assembly regardless of water depth.

[2] If still in stock, a swivel chain shot of the same size may be substituted in the riser or ground chain for the listed swivel and chain shot. Each swivel chain shot will replace 1 chain shot, 1 swivel, and 1 chain joining link in the Bill of Materials.

Table 85. Moorings Without Sinkers Maximum Mooring Depths With Various Buoys

Buoy Details	NAVFAC Dwg 620,662	NAVFAC Dwg 620,659 bar type		NAVFAC Dwg 620,605	NAVFAC Dwg 620,659
Size	3'6" spherical	Dia. Hgt. 9'6"x5'0"	Dia. Hgt. 10'6"x6'6"	Dia. Hgt. 12'0"x6'0"	Dia. Hgt. 10'6"x7'6"
Class	Depth (ft)[1]				
A	-	-	-	225	-
B	-	-	-	280	-
C	-	75	305	-	425
D	-	105	395	-	545
E	-	155	525	-	-
F	-	-	-	-	-
G	140[2]	-	-	-	-

[1] Buoys have a 2-ft. freeboard at depths tabulated, except as noted.

[2] 1-ft. freeboard.

Table 86. Moorings Without Sinkers Lengths of Ground Chain Required for Various Water Depths [1]

Depth of Water (ft)	Class						
	A	B	C	D	E	F	G
Basic	4-1/2	4-1/2	4	4	3-1/2	3-1/2	3
Basic to 50	4-1/2	4-1/2	4-1/2	4-1/2	4-1/2	4-1/2	3-1/2
50 to 60	5	5	5	5	4-1/2	4-1/2	4
60 to 70	5	5-1/2	5-1/2	5-1/2	5	5	4
70 to 80	5-1/2	5-1/2	5-1/2	5-1/2	5-1/2	5-1/2	4-1/2
80 to 90	6	6	6	6	5-1/2	5-1/2	4-1/2
90 to 100	6-1/2	6-1/2	6-1/2	6-1/2	6	6	4-1/2
100 to 120	7	7	7	7	6	6-1/2	5
120 to 140	7-1/2	7-1/2	7-1/2	7-1/2	6-1/2	6-1/2	5
140 to 160	7-1/2	7-1/2	7-1/2	7-1/2	7	7	-
160 to 180	8	8	8	8	7[2]	7	-
180 to 200	8-1/2	8-1/2	8-1/2	8-1/2	7-1/2[2]	7-1/2	-
200 to 240	9	9	9	8-1/2	8[2]	8	-
240 to 280	8-1/2[2]	9-1/2	9-1/2	9	8-1/2[2]	8-1/2	-
280 to 320	10[2]	10[2]	10	9-1/2	8-1/2[2]	9	-
320 to 360	10-1/2[2]	10-1/2[2]	10-1/2[2]	10	9[2]	9	-
360 to 400	10-1/2[2]	11[2]	11[2]	10-1/2	9-1/2[2]	9-1/2	-
400 to 440	11[2]	11[2]	-	11[2]	10[2]	9-1/2	-
440 to 480	-	11-1/2[2]	-	11[2]	10[2]	-	-
480 to 520	-	-	-	11-1/2[2]	10-1/2[2]	-	-
520 to 560	-	-	-	-	10-1/2[2]	-	-

[1] Lengths are 90-ft. shots. Depth of water is taken at mean high water from a firm bottom at anchor location. Maximum water depth determined on the basis of not exceeding the allowable stress in the chain.

[2] The freeboard limit of the mooring's standard buoy (see Table 83) will be exceeded at this depth. An optional buoy (see Table 85) must be used.

Table 87. Moorings Without Sinkers Chain Set Assemblies for Various Water Depths [1]

Depth of Water (feet)	Class A			Class B			Class C			Class D			Class E			Class F			Class G		
	2-3/4" chain (90' shot)	2-3/4" chain (45' shot)	2-3/4" Joining link	2-1/2" chain (90' shot)	2-1/2" chain (45' shot)	2-1/2" Joining link	2-1/4" chain (90' shot)	2-1/4" chain (45' shot)	2-1/4" Joining link	2" chain (90' shot)	2" chain (45' shot)	2" Joining link	1-3/4" chain (90' shot)	1-3/4" chain (45' shot)	1-3/4" Joining link	1-1/4" chain (90' shot)	1-1/4" chain (45' shot)	1-1/4" Joining link	3/4" chain (90' shot)	3/4" chain (45' shot)	3/4" Joining link
Basic to 50	0	0	0	0	1	1	0	4	4	0	4	4	3	1	4	3	1	4	0	4	4
50 to 60	0	4	4	0	4	4	3	1	4	3	1	4	3	1	4	3	1	4	3	1	4
60 to 70	0	4	4	3	1	4	3	4	7	3	4	7	3	4	7	3	4	7	3	1	4
70 to 80	3	1	4	3	1	4	3	4	7	3	4	7	6	1	7	7	0	7	4	3	7
80 to 90	3	4	7	3	4	7	7	0	7	7	0	7	7	0	7	7	0	7	4	3	7
90 to 100	7	0	7	7	0	7	7	3	10	7	3	10	7	3	10	7	3	10	4	3	7
100 to 120	7	3	10	7	3	10	10	0	10	10	0	10	7	3	10	10	0	10	7	1	8
120 to 140	10	0	10	10	1	11	10	4	14	10	4	14	10	1	11	10	1	11	7	1	8
140 to 160	10	1	11	10	1	11	10	4	14	10	4	14	10	4	14	10	4	14	-	-	-
160 to 180	10	4	14	10	4	14	14	0	14	14	0	14	11	3	14	11	3	14	-	-	-
180 to 200	14	0	14	14	0	14	14	3	17	14	3	17	14	0	14	14	0	14	-	-	-
200 to 240	14	4	18	14	4	18	17	1	18	14	4	18	14	4	18	14	4	18	-	-	-
240 to 280	18	0	18	18	0	18	18	3	21	18	0	18	18	0	18	18	0	18	-	-	-
280 to 320	18	3	21	18	4	22	21	1	22	18	4	22	18	1	19	18	4	22	-	-	-
320 to 360	21	1	22	21	1	22	22	3	25	22	0	22	19	3	22	19	3	22	-	-	-
360 to 400	22	0	22	22	3	25	25	0	25	22	4	26	22	1	23	22	1	23	-	-	-
400 to 440	22	4	26	22	4	26	-	-	-	25	1	26	22	4	26	23	0	23	-	-	-
440 to 480	-	-	-	26	0	26	-	-	-	26	0	26	23	3	26	-	-	-	-	-	-
480 to 520	-	-	-	-	-	-	-	-	-	26	4	30	26	1	27	-	-	-	-	-	-
520 to 560	-	-	-	-	-	-	-	-	-	-	-	-	27	0	27	-	-	-	-	-	-

[1] Add to Basic Depth Assembly (see Table 84) to obtain Assembly for a particular depth.

4. Classes of Moorings With Sinkers. The tables and illustrations which follow describe configurations and components of riser-type moorings with sinkers in the following class designations:

Class	Previous Class	Holding Power (lbs)	Number of Ground Legs	Type of Chain Throughout
A	A	150,000	3 (single chain)	U.S. Navy Common A-Link
B	B	125,000	3 (single chain)	U.S. Navy Common A-Link
C	C	100,000	3 (single chain)	U.S. Navy Common A-Link
D	D	75,000	3 (single chain)	U.S. Navy Common A-Link
E	E	50,000	3 (single chain)	U.S. Navy Common A-Link

The factor of safety against chain failure in all of these moorings is approximately 4. If U.S. Navy Common A-Link chain is not available, A.B.S. Grade 2 Stud Link chain is an acceptable substitute over all or part of a mooring. However, the dimensions of the fittings should always be checked to ensure the proper fit.

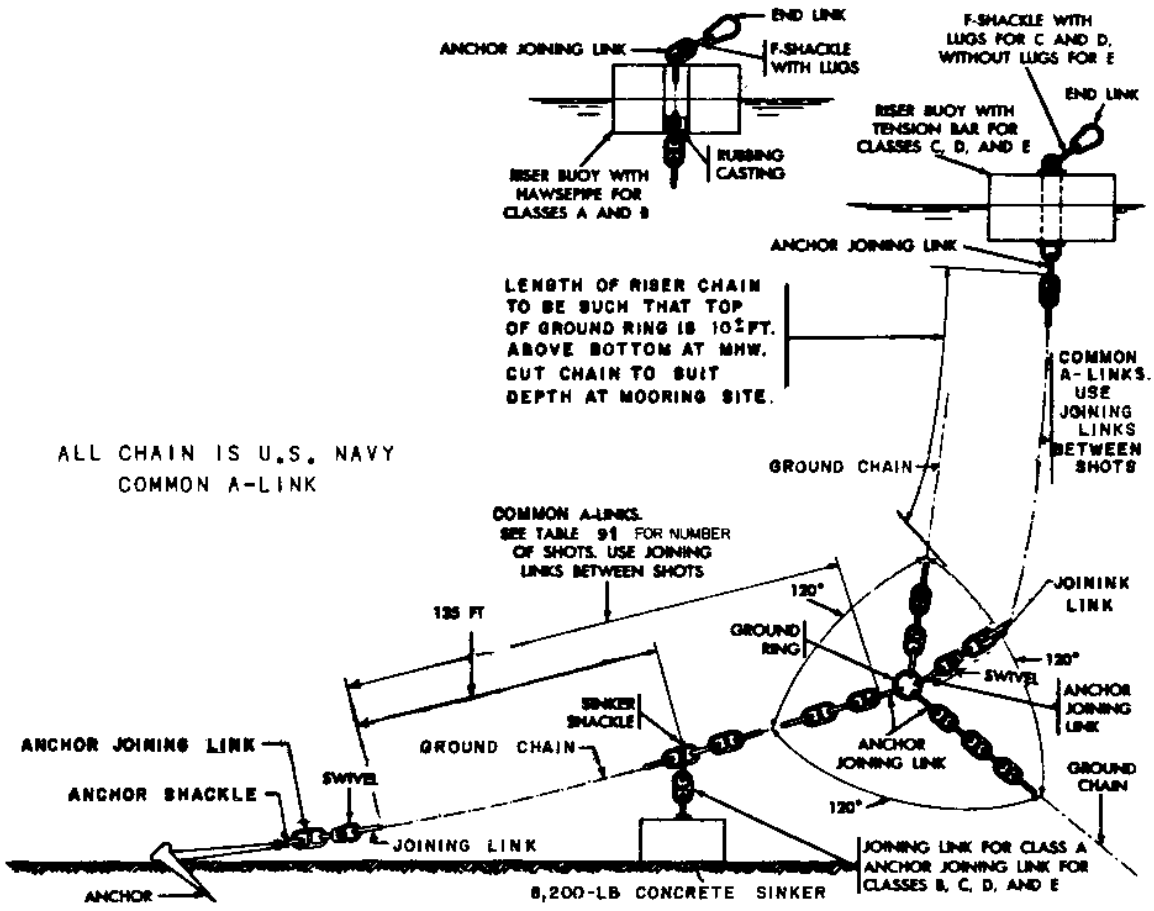

NOTES

In special situations, other fittings (than those shown) may be required to connect the anchor and ground chain if the anchor connecting link is the wrong size for the anchor's shackle.

REFERENCES

Title	Reference
Bills of Materials	Table 88
Chain Set Assembly for Basic Depth	Table 89
Sinker Details	Table 119
Maximum Mooring Depths with Various Buoys	Table 90
Lengths of Ground Chain between Anchor and Ground Ring for Various Water Depths	Table 91
Chain Set Assemblies for Depths greater than Basic	Table 92
Buoy Details - Classes A and B	NAVFAC dwg 620,605
- Classes C,D, and E	NAVFAC dwg 620,659
Chain and Fitting Details	Sections 4 and 6
Anchor Details	Sections 4,5, and 6

Figure 5. Free-Swinging, Riser-Type Mooring With Sinkers — Classes A, B, C, D, and E

Table 88. Moorings With Sinkers — Bills of Materials

Class	A		B		C		D		E	
Holding Power (lbs.)	150,000		125,000		100,000		75,000		50,000	
Basic Depth (ft)	50		45		40		35		35	
Assembly No.	5015		5254		5220		5231		5224	
Description of Item	Reqd.	Size	Reqd.	Size	Reqd.	Size	Reqd.	Size	Reqd.	Size
Riser buoy	1	Dia. 12'0" Hgt. 6'0"	1	Dia. 12'0" Hgt. 6'0"	1	Dia. 10'6" Hgt. 7'6"	1	Dia. 10'6" Hgt. 6'6"	1	Dia. 9'6" Hgt. 5'0"
Anchors	3	--[1]	3	--[1]	3	--[1]	3	--[1]	3	--[1]
Chain Set Assembly No.	1	5766	1	5764	1	5763	1	5741	1	5758
Sinkers	3	8,200 (lbs.)	3	8,200 (lbs.)	3	8,200 (lbs.)	3	8,200 (lbs.)	3	8,200 (lbs.)

[1] For anchor selection procedure, see Introduction to this part.

Table 89. Moorings With Sinkers — Chain Set Assembly for Basic Depth

Class	A			B			C			D			E		
Chain Set Assembly No.	5766			5764			5763			5741			5758		
Basic Depth (ft.)	50			45			40			35			35		
Description of Item	Reqd	Spare[1]	Chain Size	Reqd	Spare[1]	Chain Size	Reqd	Spare[1]	Chain Size	Reqd	Spare[1]	Chain Size	Reqd	Spare[1]	Chain Size
Riser chain (45 ft.)[2]	1	-	2-3/4	1	-	2-1/2	1	-	2-1/4	1	-	2	1	-	1-3/4
Ground chain (90 ft.)[2]	12	-	2-3/4	12	-	2-1/2	9	-	2-1/4	9	-	2	9	-	1-3/4
Ground chain (45 ft.)[2]	0	-	2-3/4	0	-	2-1/2	3	-	2-1/4	0	-	2	0	-	1-3/4
Ground ring	1	-	2-3/4	1	-	2-1/2	1	-	2-1/4	1	-	2	1	-	1-3/4
End link	1	-	2-3/4	1	-	2-1/2	1	-	2-1/4	1	-	2	1	-	1-3/4
F-shackle without lugs	-	-	-	-	-	-	-	-	-	-	-	-	1	1	1-3/4
F-shackle with lugs	1	1	2-3/4	1	1	2-1/2	1	1	2-1/4	1	1	2	-	-	-
Anchor joining link	8	2	2-3/4	11	2	2-1/2	11	2	2-1/4	11	2	2	11	2	1-3/4
Joining link	16	6	2-3/4	13	6	2-1/2	13	6	2-1/4	10	6	2	10	6	1-3/4
Swivel[2]	4	-	2-3/4	4	-	2-1/2	4	-	2-1/4	4	-	2	4	-	1-3/4
Rubbing casting	1	-	2-3/4	1	-	2-1/2	-	-	-	-	-	-	-	-	-
Sinker shackle	3	-	2" to 3"	3	-	2" to 3"	3	-	2" to 3"	3	-	2" to 3"	3	-	2

[1] Ship to advanced bases for each Assembly regardless of water depth.

[2] If still in stock, a swivel chain shot of the same size may be substituted in the riser or ground chain for the listed swivel and chain shot. Each swivel chain shot will replace 1 chain shot, 1 swivel, and 1 chain joining link in the Bill of Materials.

Table 90. Moorings With Sinkers — Maximum Mooring Depths With Various Buoys

Buoy Details	NAVFAC Dwg. 620659 bar type	NAVFAC Dwg. 620659 bar type	NAVFAC Dwg. 620605 hawsepipe type	NAVFAC Dwg. 620659 bar type
Size	Dia. Hgt. 9'6" x 5'0"	Dia. Hgt. 10'6" x 6'6"	Dia. Hgt. 12'0" x 6'0"	Dia. Hgt. 10'6" x 7'6"
Class	Depth (ft)[1]			
A	-	-	225	-
B	-	-	280	-
C	80	305	-	425
D	105	395	-	545
E	150	525	-	-

[1] Buoys have a 2-ft. freeboard at depth tabulated.

Table 91. Moorings With Sinkers – Lengths of Ground Chain Required for Various Water Depths[1]

Depth of Water (ft)	Class A	Class B	Class C	Class D	Class E
Basic	4	4	3-1/2	3	3
Basic to 50	4	4	4	3-1/2	3-1/2
50 to 60	4-1/2	4-1/2	4-1/2	4	3-1/2
60 to 70	4-1/2	4-1/2	4-1/2	4	4
70 to 80	5	5	5	4-1/2	4
80 to 90	5-1/2	5-1/2	5-1/2	5	4-1/2
90 to 100	5-1/2	5-1/2	5-1/2	5	5
100 to 120	6	6	6	5-1/2	5-1/2
120 to 140	6-1/2	6-1/2	6-1/2	6	5-1/2
140 to 160	7	7	7	6-1/2	6
160 to 180	7-1/2	7-1/2	7-1/2	7	6-1/2[2]
180 to 200	7-1/2	7-1/2	7-1/2	7	6-1/2[2]
200 to 240	8	8	8	7-1/2	7
240 to 280	9[2]	9	8-1/2	8	7[2]
280 to 320	9-1/2[2]	9-1/2[2]	9	8-1/2	7-1/2[2]
320 to 360	10[2]	10[2]	9-1/2	9	8[2]
360 to 400	-	10-1/2[2]	10	9-1/2	8[2]
400 to 440	-	11[2]	10-1/2	10[2]	8-1/2[2]
440 to 480	-	-	-	10-1/2[2]	9[2]

[1] Lengths are 90-ft. shots. Depth of water is taken at mean high water from a firm bottom at anchor location. Maximum water depth determined on the basis of not exceeding the allowable stress in the chain.

[2] The freeboard limit of the mooring's standard buoy (see Table 88) will be exceeded at this depth. An optional buoy (see Table 90) must be used.

Table 92. Moorings With Sinkers — Chain Set Assemblies for Various Depths [1]

Depth of water (ft)	Class A			Class B			Class C			Class D			Class E		
	2-3/4" chain (90' shot)	2-3/4" chain (45' shot)	2-3/4" Joining link	2-1/2" chain (90' shot)	2-1/2" chain (45' shot)	2-1/2" Joining link	2-1/4" chain (90' shot)	2-1/4" chain (45' shot)	2-1/4" Joining link	2" chain (90' shot)	2" chain (45' shot)	2" Joining link	1-3/4" chain (90' shot)	1-3/4" chain (45' shot)	1-3/4" Joining link
Basic to 50	0	0	0	0	1	1	0	4	4	0	4	4	0	4	4
50 to 60	0	4	4	0	4	4	3	1	4	3	1	4	0	4	4
60 to 70	0	4	4	0	4	4	3	1	4	3	1	4	3	1	4
70 to 80	3	1	4	3	1	4	3	4	7	3	4	7	3	1	4
80 to 90	3	4	7	3	4	7	7	0	7	7	0	7	4	3	7
90 to 100	4	3	7	4	3	7	7	0	7	7	0	7	7	0	7
100 to 120	7	0	7	7	0	7	7	3	10	7	3	10	7	3	10
120 to 140	7	3	10	7	4	11	10	1	11	10	1	11	7	4	11
140 to 160	10	1	11	10	1	11	10	4	14	10	4	14	10	1	11
160 to 180	10	4	14	10	4	14	14	0	14	14	0	14	11	3	14
180 to 200	11	3	14	11	3	14	14	0	14	14	0	14	11	3	14
200 to 240	14	1	15	14	1	15	14	4	18	14	4	18	14	1	15
240 to 280	18	0	18	18	0	18	18	0	18	18	0	18	15	0	15
280 to 320	18	3	21	18	4	22	18	4	22	18	4	22	15	4	19
320 to 360	21	1	22	21	1	22	22	0	22	22	0	22	19	0	19
360 to 400	-	-	-	22	3	25	22	3	25	22	4	26	19	1	20
400 to 440	-	-	-	25	1	26	25	1	26	25	1	26	19	4	23
440 to 480	-	-	-	-	-	-	-	-	-	26	3	29	23	0	23

[1] Add to Basic Depth Assembly (see Table 89) to obtain the Assembly for a particular depth.

SECTION 6. STANDARD MOORING SYSTEM COMPONENTS

1. General Notes. The following notes apply to the tables and figures in this Section:

a. All joining links and the small end of anchor joining links shall have a trial joining with their designated A-links, using A-links of minimum width and length and maximum wire diameter.

b. Manufacturer’s details of chain and fittings shall be subject to the approval of the Naval Facilities Engineering Command Headquarters.

c. All items are to be subject to proof and break test loads as noted.

d. All chain and appendages to be cast, welded, or forged steel of size indicated.

e. SET or (SET) means "small end type."

f. CSK means "countersunk."

g. All chain and fittings shall conform to the current issue of Military Specification MIL-C-18295, "Chain and Fittings for Fleet Moorings."

2. Markings.

a. Studs of alternate A-links joining links, anchor joining links (SET), anchor joining links, and sides of shackles and swivels shall be marked on one side with manufacturer’s initials or trademark, size of chain, and letters YD.

b. Sinker shackles, ground rings, spiders, and F-shackles with lugs shall be marked on one side with manufacturer’s initials or trademark and on the opposite side with the stock number.

c. End links shall be marked on one side with manufacturer’s initials or trademark and largest corresponding chain size, and on the opposite side with the stock number.

d. All markings shall be raised letters or figures of size permitted by the space available but not to exceed 3/4 in. in height by 1/8 in. in relief. The space selected for markings shall be points that carry a minimum of stress and have a minimum of wear.

3. Tolerances. The tolerances listed in Table 95 apply to the components of this section:

a. Tolerance of spider wire diameter at each end +/- 1/16 in.

b. For permissible tolerance of length and width of anchor joining links (SET), anchor joining links, and end links, use wire diameter D.

c. Tolerance of dimension F for anchor joining links (SET) and anchor joining links shall be +/- 1/8 in. Tolerance for other dimensions are according to the table providing they do not increase the tolerance of dimension F.

d. The overall length of six A-links, measuring from every third link, shall not exceed 3/8 in. more nor 1/8 in. less per inch of wire diameter than the nominal length.

e. Wire diameters shall be taken as half the sum of two measurements at right angles to each other.

4. Substitutions. This Section is included to enable use of components presently in inventory until such stock is depleted. If a standard component listed in this Section is not available, an equivalent A.B.S. Grade 2 commercial component may be substituted in the mooring assembly. These commercial components must satisfy A.B.S. markings and tolerances requirements (see Table 10) and the general notes on the preceding page, The strength and dimensions of all commercial substitutions must always be checked to ensure compatibility with the adjacent components in the mooring.

Table 93. Chain and Fitting Details - Permissible Tolerances[1]

WIRE DIAMETER	WIRE DIAMETER PLUS OR MINUS	WIDTH PLUS OR MINUS	LENGTH[2] PLUS OR MINUS
3/4 - 1-1/8	1/64	3/64	1/16
1-3/16 - 1-3/8	1/32	5/64	7/64
1-3/16 - 1-5/8	1/32	3/32	1/8
1-11/16 - 1-7/8	1/32	7/64	9/64
1-15/16 - 2-1/8	3/64	1/8	5/32
2-3/16 - 2-3/8	3/64	9/64	11/64
2-7/16 - 2-7/8	3/64	5/32	3/16
2-15/16 - 3-3/8	1/16	11/64	13/64
3-7/16 - 3-7/8	1/16	3/16	7/32
4 - 4-3/8	1/16	13/64	15/64
4-1/2 - 4-7/8	1/16	7/32	1/4
5 - 5-3/8	5/64	15/64	17/64
5-1/2 - 5-7/8	5/64	1/4	9/32
6 - 6-5/8	5/64	1/4	9/32

[1] All dimensions in inches. Also, see introduction to this section.
[2] Outside diameter for ground rings.

Table 94. Chain — Common A-Link [1]

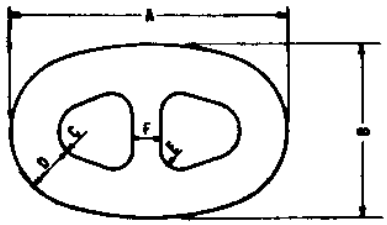

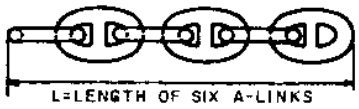

DIMENSIONS IN INCHES

CHAIN SIZE	A	B	C	D	E	F	L
4	24	14-3/8	2-5/16	4	2	2-3/4	104
3-1/2	21	12-5/8	2-1/16	3-1/2	1-3/4	2-3/8	91
3	18	10-13/16	1-13/16	3	1-1/2	2-1/16	78
2-3/4	16-1/2	9-7/8	1-5/8	2-3/4	1-3/8	1-7/8	71-1/2
2-1/2	15	9	1-1/2	2-1/2	1-1/4	1-11/16	65
2-1/4	13-1/2	8-1/8	1-3/8	2-1/4	1-1/8	1-1/2	58-1/2
2	12	7-3/16	1-1/4	2	1	1-3/8	52
1-3/4	10-1/2	6-5/16	1-1/16	1-3/4	7/8	1-3/16	45-1/2
1-1/2	9	5-3/8	15/16	1-1/2	3/4	1	39
1-1/4	7-1/2	4-1/2	25/32	1-1/4	5/8	7/8	32-1/2
1	6	3-9/16	21/32	1	1/2	11/16	26
3/4	4-1/2	2-5/8	1/2	3/4	3/8	1/2	19-1/2

[1] For markings and general notes, see Introduction to this section. A.B.S. stud link chain (see Table 11) has similar dimensions and different strengths.

Table 95. Chain — Common A-Link and Riser [1]

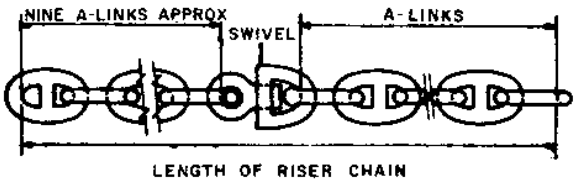

CHAIN SIZE (INCHES)	PROOF TEST (LBS.)	BREAK TEST (LBS.)	RISER CHAIN LENGTH (FEET)
4	840,000	1,176,000	40±
3-1/2	658,440	921,810	40±
3	495,000	693,000	40±
2-3/4	420,660	588,930	40±
2-1/2	351,560	492,190	35±
2-1/4	287,930	403,100	30±
2	230,000	322,000	25±
1-3/4	178,000	249,210	25±
1-1/2	132,190	185,060	-
1-1/4	92,910	130,070	20±
1	60,360	84,500	-
3/4	34,680	48,550	15±

[1] For markings and general notes, see introduction to this section.

Table 96. Fitting Details — Joining Links [1]

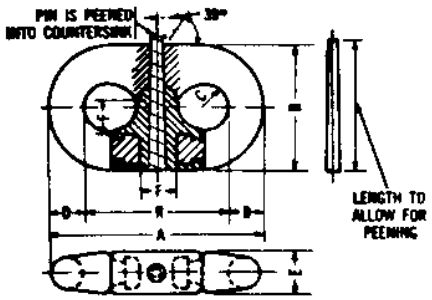

DIMENSIONS IN INCHES

CHAIN SIZE	A	B	C	D	E	F	R
4	24	15-11/16	2-5/8	4	5-3/8	4-5/8	16
3-1/2	21	14-5/32	2-1/8	3-1/2	4-5/8	4-1/4	14
3	18	11-29/32	1-13/16	3	4	3-13/32	12
2-3/4	16-1/2	10-9/16	1-23/32	2-3/4	3-21/32	3-11/32	11
2-1/2	15	9-3/4	1-21/32	2-1/2	3-3/8	2-7/8	10
2-1/4	13-1/2	8-25/32	1-1/2	2-1/4	3-1/8	2-5/8	9
2	12	7-27/32	1-5/16	2	2-11/16	2-5/16	8
1-3/4	10-1/2	6-51/64	1-5/32	1-3/4	2-5/16	2-1/32	7
1-1/2	9	5-7/8	1	1-1/2	2	1-3/4	6
1-1/4	7-1/2	4-29/32	27/32	1-1/4	1-11/16	1-7/16	5
1	6	3-59/64	21/32	1	1-11/32	1-5/32	4
3/4	4-1/2	2-15/16	1/2	3/4	1-1/32	7/8	3

[1] Data provided by Baldt, Inc. These links have same strength as connecting chain. For markings and general notes, see introduction to this section.

Table 97. Fitting Details — Joining Links [1]

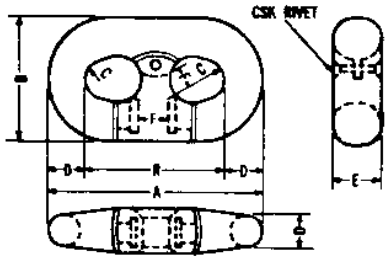

DIMENSIONS IN INCHES

CHAIN SIZE	A	B	C	D	E	F	R
4	-	-	-	-	-	-	-
3-1/2	-	-	-	-	-	-	-
3	18-3/8	11-3/8	1-21/32	3-3/16	3-11/16	3-3/16	12
2-3/4	16-7/8	10-3/8	1-1/2	2-15/16	3-7/16	2-7/8	11
2-1/2	15-1/4	9-7/16	1-3/8	2-5/8	3-1/8	2-5/8	10
2-1/4	13-3/4	8-1/2	1-1/4	2-3/8	2-7/8	2-3/8	9
2	12-1/4	7-9/16	1-1/8	2-1/8	2-5/8	2-1/8	8
1-3/4	-	-	-	-	-	-	-
1-1/2	9-1/8	5-11/16	13/16	1-9/16	1-15/16	1-5/8	6
1-1/4	7-5/8	4-3/4	11/16	1-5/16	1-11/16	1-3/8	5
1	-	-	-	-	-	-	-
3/4	-	-	-	-	-	-	-

[1] Data provided by National Malleable and Steel Castings Co. These links have same strength as connecting chain. For markings and general notes, see introduction to this section.

Table 98 . Fitting Details — Joining Links [1]

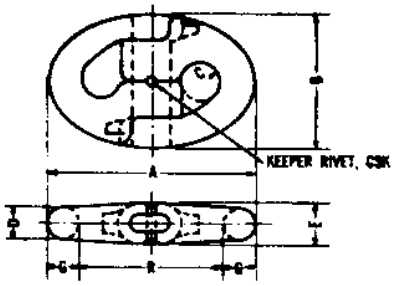

DIMENSIONS IN INCHES

CHAIN SIZE	A	B	C	D	E	G	R
4	24-1/2	15-3/16	2-1/4	4	4-5/8	4-1/4	16
3-1/2	21-1/2	13-1/4	1-15/16	3-1/2	4	3-3/4	14
3	18-3/8	11-3/8	1-11/16	3	3-7/16	3-3/16	12
2-3/4	16-7/8	10-3/8	1-17/32	2-3/4	3-3/16	2-15/16	11
2-1/2	15-1/4	9-1/2	1-13/32	2-1/2	2-7/8	2-5/8	10
2-1/4	13-3/4	8-1/2	1-1/4	2-1/4	2-5/8	2-3/8	9
2	12-1/4	7-5/8	1-1/8	2	2-3/8	2-1/8	8
1-3/4	10-3/4	6-5/8	31/32	1-3/4	2-1/16	1-7/8	7
1-1/2	9-1/8	5-3/4	27/32	1-1/2	1-3/4	1-9/16	6
1-1/4	7-5/8	4-3/4	11/16	1-1/4	1-1/2	1-5/16	5
1	6-1/8	3-3/4	19/32	1	1-1/4	1-1/16	4
3/4	4-5/8	2-7/8	7/16	3/4	15/16	13/16	3

[1] Data provided by Portland Chain Manufacturing Co. These links have same strength as connecting chain. For markings and general notes, see Introduction to this section.

Table 99. Fitting Details – Joining Links [1]

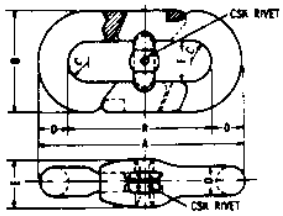

DIMENSIONS IN INCHES

CHAIN SIZE	A	B	C	D	E	F	R
4	24-1/2	15-3/4	2-3/8	4-1/4	7	4-3/4	16
3-1/2	21-1/2	14	2-1/4	3-3/4	5-1/2	4-1/2	14
3	-	-	-	-	-	-	-
2-3/4	16-1/2	10-1/4	1-13/16	2-3/4	4-7/16	3-5/8	11
2-1/2	-	-	-	-	-	-	-
2-1/4	12-1/2	7-5/8	1-5/16	2-1/4	3-3/8	2-5/8	8
2	-	-	-	-	-	-	-
1-3/4	-	-	-	-	-	-	-
1-1/2	9-1/4	5-7/8	1-1/4	1-1/2	2-1/2	2-1/2	6-1/4
1-1/4	-	-	-	-	-	-	-
1	6-1/8	4	21/32	1-1/16	1-13/16	1-5/16	4
3/4	4-3/4	3-1/16	15/32	13/16	1-19/32	15/16	3-1/8

[1] Data provided by Interstate Drop Forge Co. These links have same strength as connecting chain. For markings and general notes, see introduction to this section.

Table 100. Fitting Details — Joining Links [1]

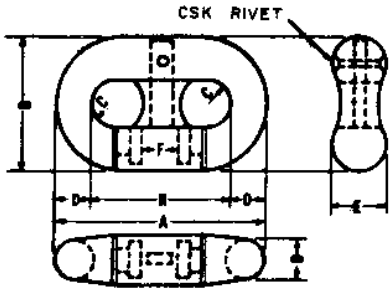

DIMENSIONS IN INCHES

CHAIN SIZE	A	B	C	D	E	F	R
4	-	-	-	-	-	-	-
3-1/2	-	-	-	-	-	-	-
3	18	11-5/8	1-31/32	3	4-1/2	3-7/16	12
2-3/4	16-1/2	10-5/8	1-13/16	2-3/4	4-1/8	3-3/16	11
2-1/2	15	9-11/16	1-21/32	2-1/2	3-3/4	2-7/8	10
2-1/4	13-1/2	8-11/16	1-15/32	2-1/4	3-3/8	2-5/8	9
2	12	7-3/4	1-5/16	2	3	2-5/16	8
1-3/4	-	-	-	-	-	-	-
1-1/2	9	5-13/16	31/32	1-1/2	2-5/16	1-3/4	6
1-1/4	7-1/2	4-7/8	13/16	1-1/4	1-15/16	1-7/16	5
1	-	-	-	-	-	-	-
3/4	-	-	-	-	-	-	-

[1] Data provided by E.V. Camp Steel Works. These links have same strength as connecting chain. For markings and general notes, see Introduction to this section.

Table 101. Fitting Details — Anchor Joining Links [1]

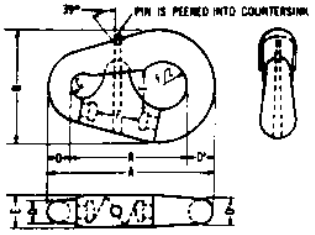

DIMENSIONS IN INCHES

CHAIN SIZE	A	B	C	D	D'	E	F	R
4	28-3/4	17-1/8	2-1/4	4	5-1/8	5-3/4	7-1/2	19-5/8
3-1/2	25-5/8	16	2-1/8	3-5/8	4-7/8	5-1/2	7	17-1/8
3	22	14-13/16	1-13/16	3	3-3/4	4-5/8	6-1/2	15-1/4
2-3/4	22	14-13/16	1-13/16	3	3-3/4	4-5/8	6	15-1/4
2-1/2	22	14-13/16	1-13/16	3	3-3/4	4-5/8	5-1/2	15-1/4
2-1/4	17-7/8	12-5/16	1-3/8	2-3/8	3	3-5/8	5	12-1/2
2	17-7/8	12-5/16	1-3/8	2-3/8	3	3-5/8	4-1/2	12-1/2
1-3/4	15	9-7/8	1-3/16	2	2-1/2	3	4-1/8	10-1/2
1-1/2	15	9-7/8	1-3/16	2	2-1/2	3	3-3/4	10-1/2
1-1/4	11-3/4	8-1/8	15/16	1-9/16	1-7/8	2-5/16	3-1/4	8-5/16
1	9-3/8	6-9/16	3/4	1-3/16	1-1/2	1-13/16	2-3/4	6-7/8
3/4	7-5/8	5-3/16	21/32	15/16	1-1/4	1-9/16	2-1/4	5-7/16

[1] Data provided by Baldt, Inc. These links have same strength as connecting chain. For markings and general notes, see Introduction to this section.

Table 102. Fitting Details — Anchor Joining Links [1]

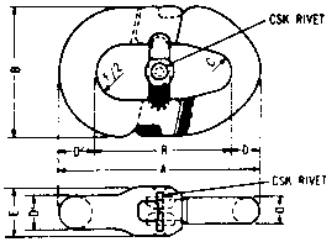

DIMENSIONS IN INCHES

CHAIN SIZE	A	B	C	D	D'	E	F	R
4	31-1/2	18-1/2	2-1/2	4	5-1/2	7	7-1/2	22
3-1/2	27-1/4	16-1/2	2	3-1/2	4-3/4	5-9/16	7	19
3	24-1/4	15-1/8	1-7/8	3-1/4	4-5/16	5-9/16	6-1/2	16-11/16
2-3/4	20-7/8	13-1/2	2	3	3-5/8	5	6	14-1/4
2-1/2	20-3/8	13-1/4	2	3	3-1/2	5	5-3/4	13-7/8
2-1/4	16	10-1/4	1-7/8	2-3/8	2-7/8	4	5	10-3/4
2	15	9-7/8	1-7/8	2-1/4	2-3/4	3-3/4	4-5/8	10
1-3/4	14-1/8	8-5/8	1-1/16	1-7/8	2-3/8	3-1/4	4-1/8	9-7/8
1-1/2	12-3/4	7	7/8	1-5/8	2	2-5/8	3-3/4	9-1/2
1-1/4	12	6-3/4	3/4	1-3/8	1-3/4	2-3/8	3-1/4	8-7/8
1	10-1/2	5-7/16	3/4	1-1/8	1-3/8	1-13/16	2-3/4	8
3/4	8-3/8	4-1/2	5/8	7/8	1-1/4	1-5/8	2-1/4	6-1/4

[1] Data provided by Interstate Drop Forge Co. These links have same strength as connecting chain. For markings and general notes, see introduction to this section.

Table 103. Fitting Details — Anchor Joining Links [1]

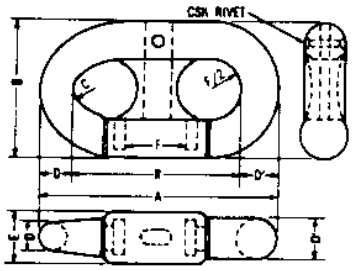

DIMENSIONS IN INCHES

CHAIN SIZE	A	B	C	D	D'	E	F	R
4	-	-	-	-	-	-	-	-
3-1/2	-	-	-	-	-	-	-	-
3	24-1/4	14-11/16	1-3/4	3-1/4	3-3/4	5-3/8	6-1/2	17-1/4
2-3/4	22-1/2	13-9/16	1-5/8	3	3-1/2	4-15/16	6	16
2-1/2	20-3/4	12-7/16	1-1/2	2-3/4	3-1/4	4-1/2	5-1/2	14-3/4
2-1/4	19	11-5/16	1-3/8	2-1/2	3	4-1/16	5	13-1/2
2	17-1/4	10-3/16	1-1/4	2-1/4	2-3/4	3-5/8	4-1/2	12-1/4
1-3/4	-	-	-	-	-	-	-	-
1-1/2	13-5/8	8	1	1-5/8	2	2-11/16	3-3/4	10
1-1/4	11-7/8	6-7/8	13/16	1-3/8	1-3/4	2-1/4	3-1/4	8-3/4
1	-	-	-	-	-	-	-	-
3/4	-	-	-	-	-	-	-	-

[1] Data provided by E.V. Camp Steel Works. These links have same strength as connecting chain. For markings and general notes, see Introduction to this section.

Table 104. Fitting Details – Anchor Joining Links [1]

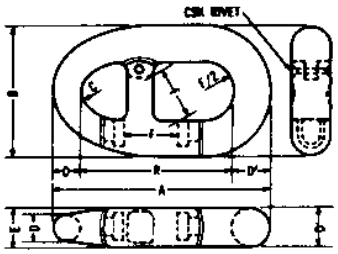

DIMENSIONS IN INCHES

CHAIN SIZE	A	B	C	D	D'	E	F	R
4	-	-	-	-	-	-	-	-
3-1/2	-	-	-	-	-	-	-	-
3	24-15/16	14-7/8	1-21/32	3-1/4	4-3/16	4-3/16	6-1/2	17-1/2
2-3/4	22-7/8	13-3/4	1-17/32	3	3-7/8	3-7/8	6	16
2-1/2	20-13/16	12-5/8	1-13/32	2-3/4	3-9/16	3-9/16	5-1/2	14-1/2
2-1/4	18-13/16	11-5/8	1-1/4	2-1/2	3-5/16	3-5/16	5	13
2	16-7/8	10-3/4	1-1/8	2-1/4	3-1/8	3-1/8	4-1/2	11-1/2
1-3/4	-	-	-	-	-	-	-	-
1-1/2	-	-	-	-	-	-	-	-
1-1/4	-	-	-	-	-	-	-	-
1	-	-	-	-	-	-	-	-
3/4	-	-	-	-	-	-	-	-

[1] Data provided by National Malleable and Steel Castings Co. These links have same strength as connecting chain. For markings and general notes, see introduction to this section.

Table105 . Fitting Details — Anchor Joining Links [1]

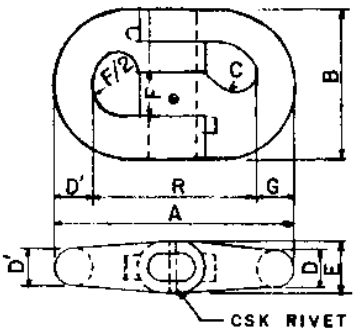

DIMENSIONS IN INCHES

CHAIN SIZE	A	B	C	D	D'	E	F	G	R
4	31-3/16	20	2-3/16	4-3/16	4-7/8	5-1/2	7-1/2	4-7/16	21-7/8
3-1/2	29-7/16	18-5/8	2-1/16	3-7/8	4-7/16	5	7	4-1/8	20-7/8
3	23	14-7/8	1-11/16	3	3-9/16	4-1/4	6-1/2	3-1/4	16-3/16
2-3/4	21-3/8	13-3/4	1-9/16	2-3/4	3-3/8	3-3/4	6	3	15
2-1/2	19-7/16	12-3/4	1-7/16	2-1/2	3	3-3/8	5-1/2	2-3/4	13-11/16
2-1/4	17-15/16	11-11/16	1-5/16	2-5/16	2-13/16	3-1/8	5	2-9/16	12-9/16
2	16	10-3/8	1-3/16	2-1/16	2-1/2	2-3/4	4-1/2	2-1/4	11-1/4
1-3/4	14-3/32	9	1	1-13/16	2-3/16	2-7/16	4-1/8	2	9-29/32
1-1/2	12-5/16	8-1/8	15/16	1-9/16	1-7/8	2-1/8	3-3/4	1-11/16	8-3/4
1-1/4	10-1/16	6-3/4	11/16	1-3/16	1-7/16	1-3/4	3-1/4	1-5/16	7-5/16
1	8-1/16	5-1/4	9/16	1-1/16	1-1/4	1-3/8	2-3/4	1-1/8	5-11/16
3/4	6-3/8	4-1/8	7/16	13/16	1	1-5/32	2-1/4	7/8	4-1/2

[1] Data provided by Portland Chain Manufacturing Co. These links have same strength as connecting chain. For markings and general notes, see introduction to this section.

Table 106. Fitting Details – Anchor Joining Links (SET) [1]

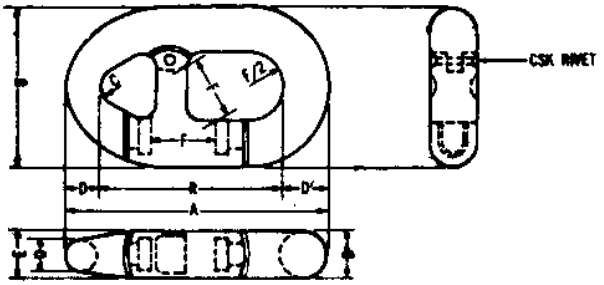

DIMENSIONS IN INCHES

CHAIN SIZE	A	B	C	D	D'	E	F	R
1	-	-	2-3/16	-	-	-	6-1/2	-
3-1/2	24	14-3/8	1-15/16	3-3/4	4-1/2	4-1/2	5-3/8	15-3/4

[1] Data provided by National Malleable and Steel Castings Co. These links have same strength as connecting chain. For markings and general notes, see introduction to this section.

Table 107. Fitting Details — Anchor Joining Links (SET) [1]

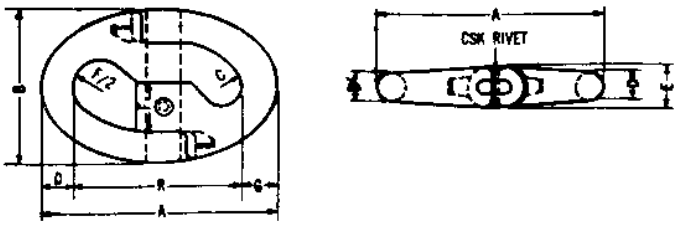

DIMENSIONS IN INCHES

CHAIN SIZE	A	B	C	D	D'	E	F	G	R
4	31-3/16	20	2-3/16	4-3/16	4-7/8	5-1/2	6-1/2	4-7/16	21-7/8
3-1/2	29-7/16	18-5/8	2-1/16	3-7/8	4-7/16	5	5-3/8	4-1/8	20-7/8

[1] Data provided by Portland Chain Manufacturing Co. These links have same strength as connecting chain. For markings and general notes, see Introduction to this section.

Table 108. Fitting Details – Anchor Joining Links (SET) [1]

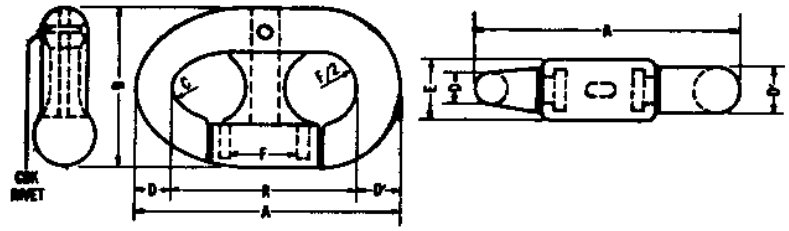

DIMENSIONS IN INCHES

CHAIN SIZE	A	B	C	D	D'	E	F	R
4	-	-	2-3/16	-	-	-	6-1/2	-
3-1/2	24-1/2	14-1/2	2	3-5/8	4-1/8	6-1/4	5-3/8	16-3/4

[1] Data provided by E.V. Camp Steel Works. These links have same strength as connecting chain. For markings and general notes, see Introduction to this section.

Table 109. Fitting Details — End Links [1]

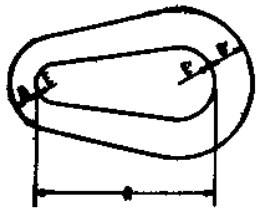

CHAIN SIZE	DIMENSIONS IN INCHES D	D'	E	E'	R	PROOF TEST (LBS.)	BREAK TEST (LBS.)
4	4-1/4	5-1/2	2-7/8	5	20	840,000	1,176,000
3-1/2	3-15/16	5	2-1/2	4-3/4	18	658,440	921,810
3	3-3/4	4-1/2	2-3/16	4-1/2	18	495,000	693,000
2-3/4	3-3/8	4-1/8	2	4-1/4	18	420,660	588,930
2-1/2	3-1/8	3-3/4	1-7/8	4	15	351,560	492,190
2-1/4	2-3/4	3-3/8	1-3/4	3-3/4	15	287,930	403,100
2	2-1/2	3	1-1/2	3-1/2	15	230,000	322,000
1-3/4	2-1/4	2-3/4	1-3/8	3-1/4	15	178,000	249,000
1-1/4	1-3/4	2-1/4	1	2-3/4	12	92,910	130,070
3/4	1	1-1/2	5/8	2-1/4	10	34,680	48,550

[1] For markings and general notes, see introduction to this section.

Table 110. Fitting Details — Type F Bending Shackles [1]

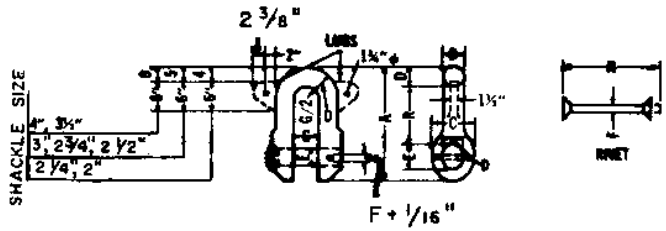

CHAIN SIZE	DIMENSIONS IN INCHES A	C	D	E	F	N	G	R	PROOF TEST (LBS.)	BREAK TEST (LBS.)
4	35-13/16	12-13/16	5-3/8	7-1/4	1-1/4	14-1/2	8	18-13/16	840,000	1,176,000
3-1/2	31-3/16	11-5/16	4-15/16	6-1/4	1-1/4	13	7	16-3/8	658,440	921,810
3	26-13/16	9-9/16	4-3/16	5-3/8	1-1/8	11-9/16	6	14-1/8	495,000	693,000
2-3/4	24-5/8	8-7/8	3-7/8	4-15/16	1-1/8	10-3/4	5-1/2	12-15/16	420,660	588,930
2-1/2	22-3/8	8	3-1/2	4-1/2	1	9-3/4	5	11-3/4	351,560	492,190
2-1/4	20-1/16	7-1/4	3-1/8	4-1/16	7/8	8-7/8	4-1/2	10-1/2	287,930	403,100
2	17-15/16	6-7/16	2-13/16	3-5/8	7/8	8	4	9-3/8	230,000	322,000
1-3/4	15-5/8	5-11/16	2-7/16	3-1/8	3/4	7-1/8	3-1/2	8-3/16	178,000	249,210
1-1/2	13-1/2	4-7/8	2-1/8	2-11/16	5/8	6-1/8	3	7-1/16	132,190	185,060
1-1/4	11-1/4	4	1-3/4	2-1/4	5/8	5-1/4	2-3/4	5-7/8	92,910	130,070
1	8-15/16	3-5/16	1-7/16	1-13/16	1/2	4-1/2	2	4-9/16	60,360	84,500
3/4	6-11/16	2-7/16	1-1/16	1-3/8	3/8	3-1/2	1-1/2	3-1/2	34,680	48,550

[1] For markings and general notes, see introduction to this section.

Tabel 111. Fitting Details – Sinker Shackles [1]

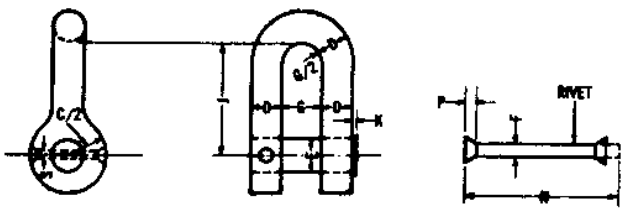

CHAIN SIZE	DIMENSIONS IN INCHES C/2	D	E	F	G/2	J	K	N	P	S	PROOF TEST (LBS.)	BREAK TEST (LBS.)
2 - 3	2-15/16	2-13/16	2-1/4	5/8	1-5/8	15	7/16	7-1/2	3/8	11/16	150,000	200,000
1-1/2 - 2	2-3/16	2	1-3/4	1/2	1-1/8	10-3/4	5/16	5-7/8	1/4	9/16	100,000	135,000
1 - 1-1/2	1-1/4	1-1/2	1-1/4	3/8	1	8-1/8	1/4	4	3/16	7/16	48,000	65,000

[1] For markings and general notes, see introduction to this section.

Table 112. Fitting Details — Ground Rings [1]

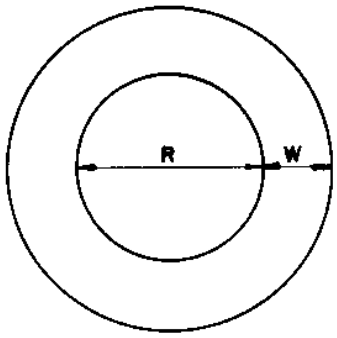

DIMENSIONS IN INCHES				
CHAIN SIZE	R	W	PROOF TEST (LBS.)	BREAK TEST (LBS.)
*4-1/2	21	7-1/4	1,405,000	2,008,000
4	18	6-1/2	840,000	1,176,000
3-1/2	18	6-1/2	840,000	1,176,000
3	16	6	495,000	693,000
2-3/4	15	5-1/2	420,660	588,930
2-1/2	14	4-3/4	351,560	492,190
2-1/4	14	4-1/2	287,930	403,100
2	14	4	230,000	322,000
1-3/4	12	3-1/2	178,000	249,210
1-1/4	10	2-3/4	92,910	130,070
3/4	10	1-7/8	34,680	48,550

*PROPOSED FOR USE IN THE AAA AND BBB CLASS MOORINGS (NOT STOCKED).

[1] For markings and general notes, see Introduction to this section.

Table 113. Fitting Details – Swivels [1]

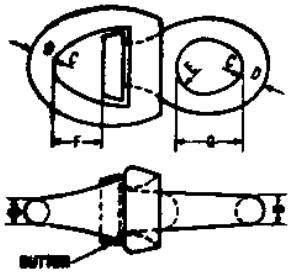

CHAIN SIZE	DIMENSIONS IN INCHES C	D	E	F	G	PROOF TEST (LBS.)	BREAK TEST (LBS.)
4	2-1/2	4-1/8	3-1/2	7	7-1/2	840,000	1,176,000
3-1/2	2-1/4	3-5/8	3	6	6-9/16	658,440	921,810
3	1-15/16	3-1/8	2-5/8	5-1/4	5-11/16	495,000	693,000
2-3/4	1-3/4	2-7/8	2-3/8	4-7/8	5-1/4	420,660	588,930
2-1/2	1-9/16	2-5/8	2-1/8	4-1/2	4-13/16	351,560	492,190
2-1/4	1-7/16	2-3/8	1-15/16	4	4-3/8	287,930	403,100
2	1-5/16	2-1/8	1-3/4	3-1/2	4	230,000	322,000
1-3/4	1-1/8	1-7/8	1-1/2	3-1/16	3-7/16	178,000	249,210
1-1/2	1	1-5/8	1-5/16	2-11/16	2-15/16	132,190	185,060
1-1/4	7/8	1-5/16	1-1/8	2-5/16	2-7/16	92,910	130,070
1	3/4	1-1/8	7/8	1-7/8	2	60,360	84,500
3/4	9/16	7/8	11/16	1-1/2	1-9/16	34,680	48,550

[1] The proper joining links must be selected that allow the swivel to be connected to the adjacent chain or fittings. The buttons are cast integrally with male pieces. For markings and general notes, see introduction to this section.

Table 114. Fitting Details Rubbing Castings[1]

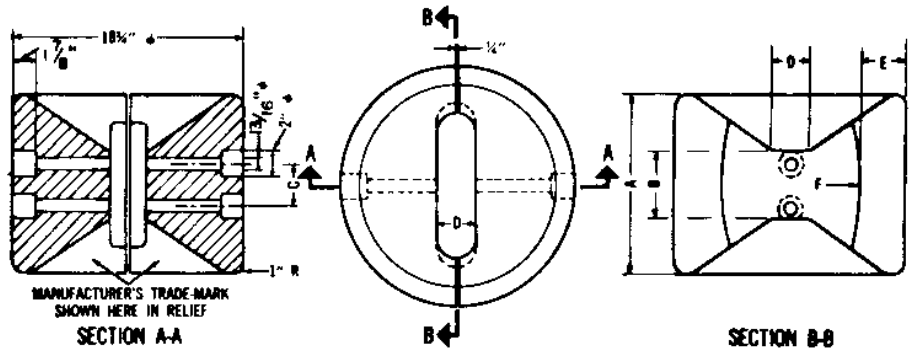

Required per assembly:
Two 3/4" x 16" galv steel bolts and nuts
Two 3/4" lock washers electrozinc or cadmium plated
Material:
Cast steel, MIL-S-15083, class CW

DIMENSIONS IN INCHES

CHAIN SIZE	A	B	C	D	E	F
4	16	7	4-1/2	4	2	25
3-1/2	16	5-1/2	4	3-1/2	2-7/8	22
3	14	5-1/4	3-1/2	3	3-3/4	21
2-3/4	14	4-7/8	3-1/4	2-3/4	4-1/4	18
2-1/2	12	4-1/2	3	2-1/2	4-1/2	16

Table 115. Standard Stockless Anchors

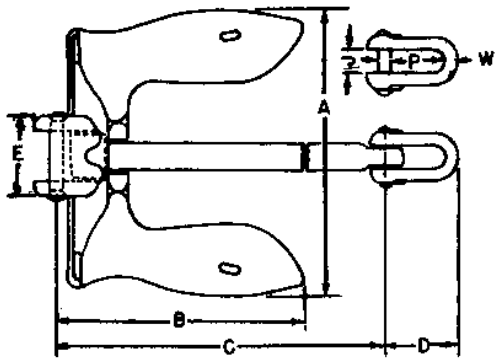

ANCHOR WEIGHT (LBS.)	DIMENSIONS IN INCHES							
	A	B	C	D	E	J	P	W
500	29-3/4	26-7/8	37-1/4	7-5/8	8-1/2	2-1/16	1-7/16	1-3/8
1,500	43	38-3/4	53-5/8	11	12-1/8	3	2-1/16	2
3,000	54-1/8	48-3/4	67-1/2	13-7/8	15-3/8	3-7/8	2-9/16	2-1/2
5,000	64-1/8	57-3/4	80-1/8	16-1/2	18-1/4	4-1/2	3-1/16	2-7/8
6,000	67-7/8	62-9/16	85-1/16	17-3/8	19-1/8	4-13/16	3-1/4	3-1/16
7,000	71-7/16	65-7/8	89-9/16	18-5/16	20-1/8	5-1/16	3-7/16	3-1/4
9,000	78-1/16	70-3/8	97-1/2	20	22-1/8	5-1/2	3-3/4	3-1/2
10,000	80-1/2	74-3/16	100-7/8	20-5/8	22-11/16	5-11/16	3-7/8	3-5/8
13,000	87-7/8	79-1/8	109-3/4	22-1/2	24-7/8	6-1/8	4-1/8	4
14,500	90-7/8	83-3/4	114	23-1/4	25-5/8	6-3/8	4-7/16	4-1/8
18,000	98-3/8	90-3/8	122-3/4	25-1/4	27-3/4	6-15/16	4-11/16	4-7/16
20,000	101-7/8	91-3/4	127-1/4	26-1/8	28-7/8	7-1/8	4-7/8	4-9/16
25,000	109-3/4	98-7/8	137-1/16	28-1/8	31-1/8	7-3/4	5-1/4	5
30,000	116-5/8	107-1/4	145-5/8	29-13/16	33-3/16	8-3/16	5-9/16	5-1/4
40,000	127-3/4	117-13/16	160-1/16	32-11/16	36	9	6-1/8	5-3/4

Table 116. Standard Stockless Anchors with Stabilizers

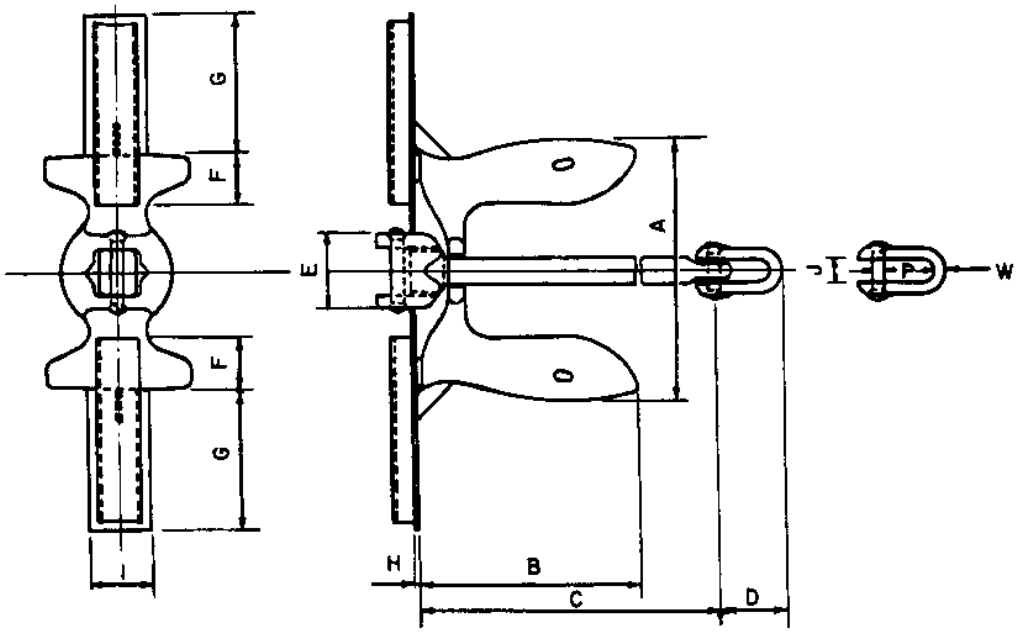

ANCHOR WEIGHT (LBS.)	DIMENSIONS[1] IN INCHES			
	F	G	H	I
3,000	11	30	1/2	13
5,000	13	36	1/2	16
6,000	14	36	1/2	16
7,000	15	36	1/2	16
9,000	16	36	3/4	16
10,000	17	36	3/4	19
13,000	18	40	3/4	19
14,500	19	40	3/4	21
18,000	20	45	1	21
20,000	21	45	1	21
25,000	22	48	1	22
30,000	24	50	1	23
40,000	27	36	1-1/4	26

[1]See Table 115 for dimensions A,B,C,D,J,W, and P.

Table 117. NAVSHIP Lightweight Anchors

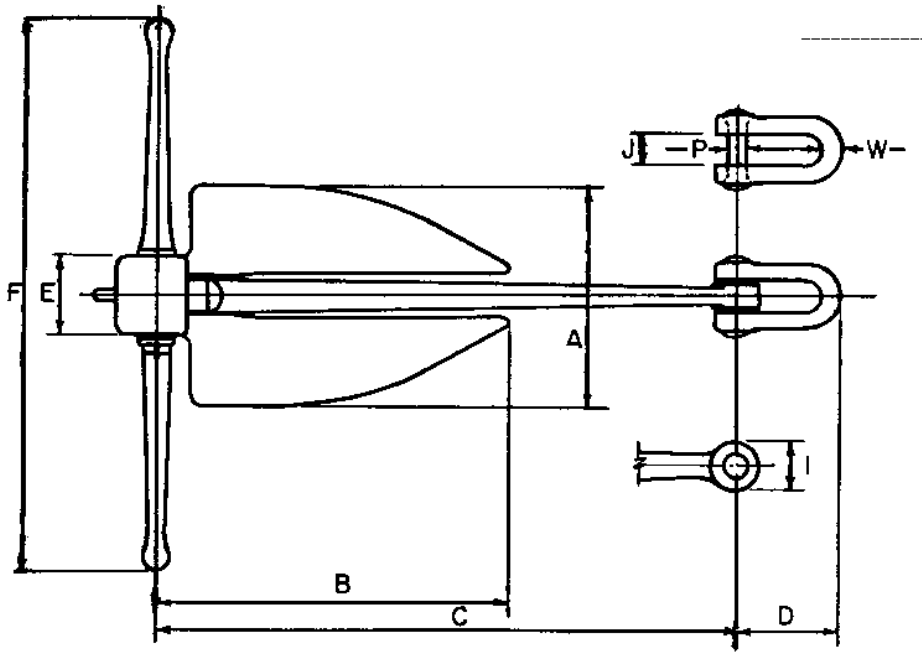

ANCHOR WEIGHT (LBS.)	DIMENSIONS IN INCHES									
	A	B	C	D	E	F	I	J	P	W
100	15-5/8	24	41-1/2	4-5/8	4-3/8	39-1/2	2-1/4	1-7/16	1	7/8
150	17-3/4	27	46-3/4	4-5/8	5	44-1/2	2-3/8	1-13/16	1-1/8	1-1/8
200	18-7/8	29	47-1/2	6	5-1/4	45	3-1/8	1-5/8	1-3/16	1-1/8
300	21-1/4	32-1/2	53	6-7/8	6-3/16	50	3-1/4	2	1-3/8	1-1/4
500	24	37-1/2	61-1/2	7-5/8	7-3/8	58-1/2	4-1/4	2	1-5/8	1-3/8
750	28-7/16	42	69	8-29/32	9-3/16	64-1/2	4-7/8	2-9/16	2	1-7/8
1,000	28	45-5/8	74-3/4	9-7/8	10-1/2	74-3/4	5-1/4	3	2-1/4	2-1/16
1,500	31-7/8	53	86-1/2	11-3/8	11-7/16	82-1/16	5-7/8	3-3/8	2-9/16	2-3/8
2,000	37-1/4	56-1/2	92-1/2	13	13-1/8	85	7	3-1/2	2-7/8	2-5/8
2,500	39-1/2	62	101-1/2	13	13-1/2	96-1/2	7-1/4	3-5/8	3	2-5/8
3,000	40-3/8	66	108-1/2	14-1/4	15-1/4	108-1/2	7-3/4	4-3/16	3-1/4	3
4,000	44	71	116	18-7/8	16-1/8	110	9	5-1/2	3-7/8	3-3/8
5,000	44-3/4	72	118	21	16-1/4	112	9-1/2	5-3/4	4-1/8	3-5/8
6,000	47-1/4	76	124	22	17-1/4	118	10-1/4	6	4-1/2	4
10,000	55-1/4	88	144	26	21-1/4	137	12	7	5-3/8	4-1/2
13,000	60-1/2	94	154	26-3/4	23-1/2	146	14-1/2	7-1/8	6	5

Table 118. NAVFAC STATO Anchors

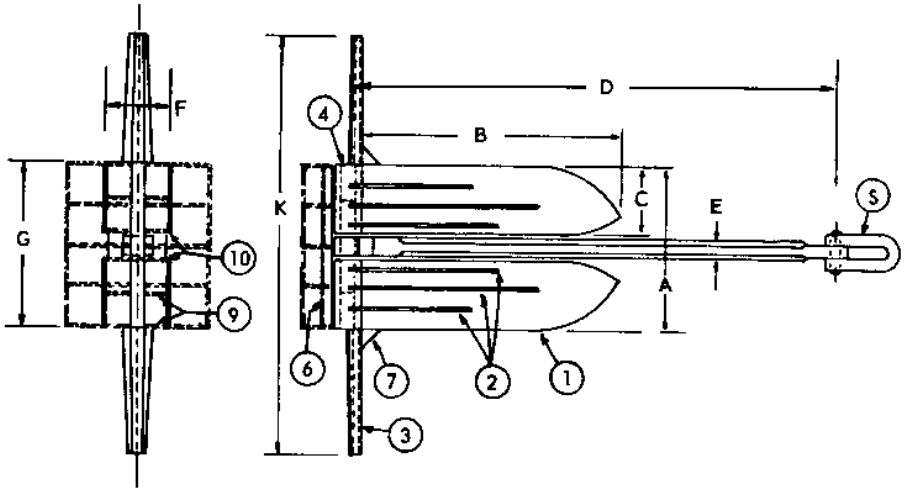

ANCHOR WEIGHT (LBS.)	DIMENSIONS IN INCHES								SHACKLE SIZE	SHACKLE WEIGHT (LBS.)	SHACKLE STRENGTH (LBS.)
	A	B	C	D	E	F	G	K			
200	23	25	10	42	2	9-1/2	23	59	3/4	2	18,000
3,000	41-1/2	69	18	129	4	19	41-1/2	109-1/2	1-3/4	25	180,000
6,000	55	82	24	144	5	21	55	143	2-1/4	55	360,000
9,000	62	96	27	160	6	27	62	170	2-3/4	91	540,000
12,000	69	108	30	186	7	30	69	197	3	108	630,000
15,000	76	121	33	205	8	32-3/8	76	224	3-1/2	140	960,000

ANCHOR WEIGHT (LBS.)	PLATE THICKNESSES IN INCHES							
	1	2	3	4	6	7	9	10
200	1/4	1/2	1/4	1/4	1/4	1/4	1/4	1/2
3,000	1-1/4	1	1/2	5/8	5/8	5/8	5/8	5/8
6,000	1-1/2	1	1/2	3/4	3/4	3/4	3/4	3/4
9,000	1-3/4	1-1/8	5/8	7/8	7/8	7/8	7/8	7/8
12,000	2	1-1/4	5/8	1	1	1	1	1
15,000	2-1/4	1-1/2	5/8	1-1/8	1-1/8	1-1/8	1-1/8	1-1/8

Table 119. Concrete Sinkers

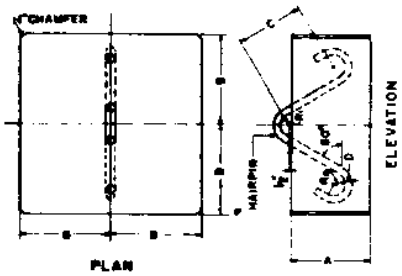

NOTE

Hairpins of the same diameter but of different form and length may be substituted for those given in this table provided that the shape of sinker shown is changed to suit the shape of hairpin without change of the sinker volume.

The above applies also to sinkers used as anchors for navigational buoys except that the sinker plan shall be square.

			QUANTITIES OF MATERIALS REQUIRED TO FABRICATE SINKERS				HAIRPINS				
SINKER WEIGHT (LBS.)[1]	A	B	CEMENT (94 LB. BAGS)	WATER (GAL.) APPROX.	FINE AGGREGATE (LBS.)[2]	COARSE AGGREGATE (LBS.)[2]	D	LENGTH	R_1	R_2	C
3,000	1'-6-1/2"	1'-10"	5	30	900	1,600	1-3/4"	5'-6"	2"	2-1/2"	1'-4-1/2"
4,000	1'-9"	2'-0"	6	40	1,200	2,100	2"	6'-0"	2-1/4"	3"	1'-6"
5,000	1'-11"	2'-1-1/2"	7	50	1,500	2,600	2"	6'-0"	2-1/4"	3"	1'-6"
6,500	2'-1"	2'-4"	10	65	2,000	3,400	2-1/4"	7'-0"	2-3/4"	3-1/2"	1'-10"
8,200	2'-3"	2'-6"	12	80	2,600	4,400	3"	7'-6"	4"	3-1/2"	1'-10-1/2"

[1] Weights given are based on the use of aggregates with a specific gravity of 2.65. If aggregates of different specific gravity are used, the sinkers shall be modified such that they have submerged weights equal to 56% of the weights given. Chain lengths given in various tables for chains with sinkers are based on the submerged weights of sinkers shown in this table.

[2] Weight in air. Submerged weight = 56% of weight in air.

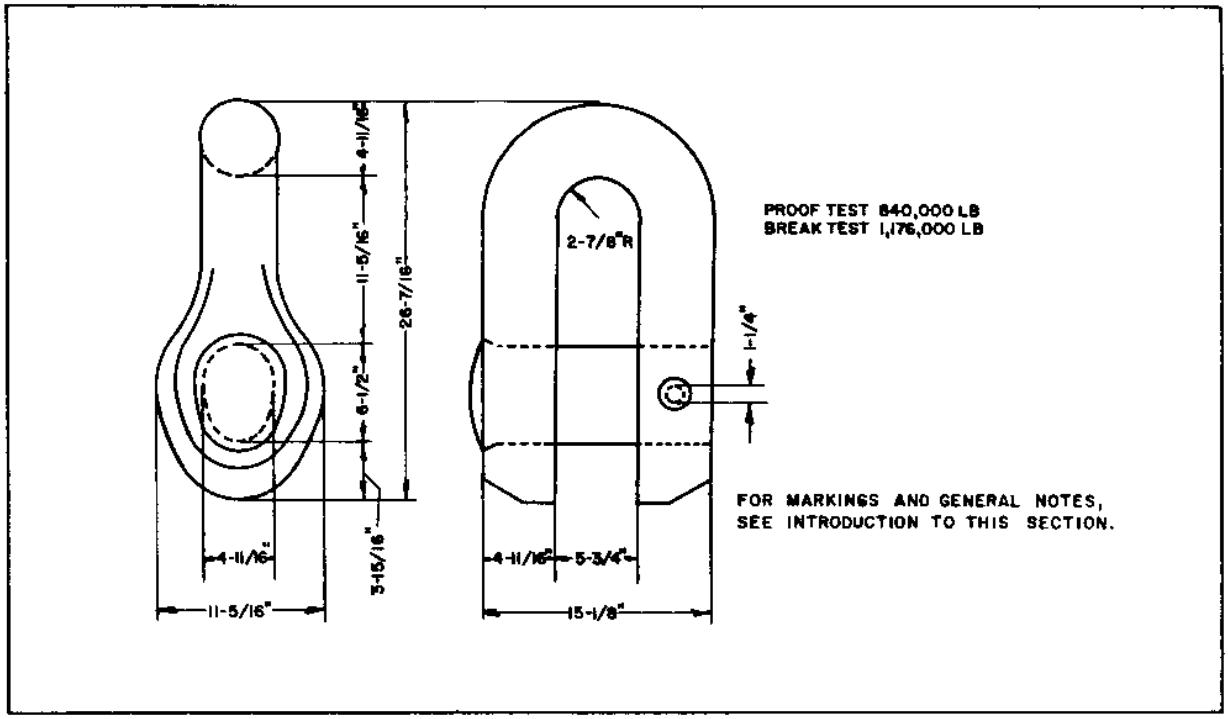

Figure 6. Fitting Details — 4-Inch D-Shackle

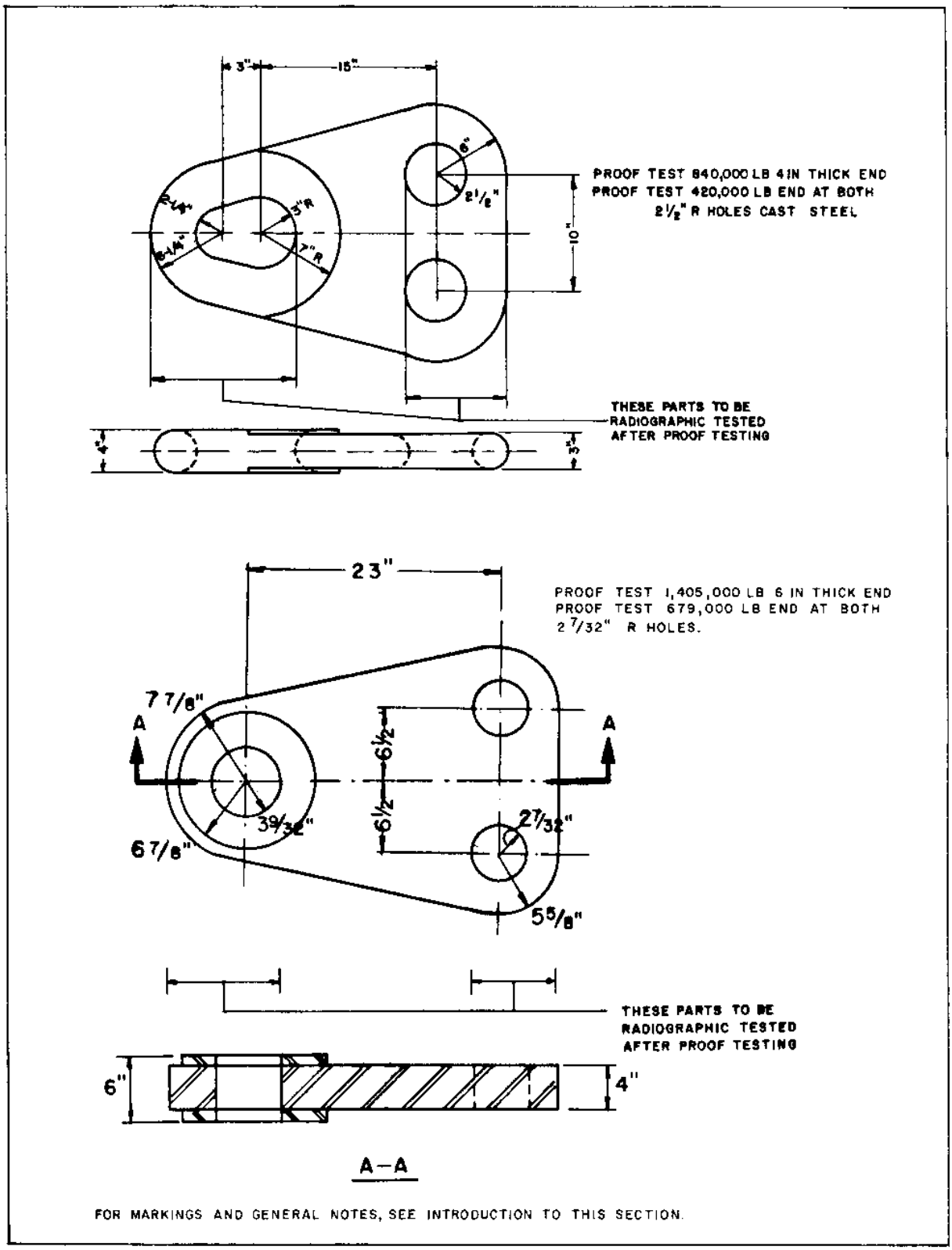

Figure 7. Fitting Details — Spiders

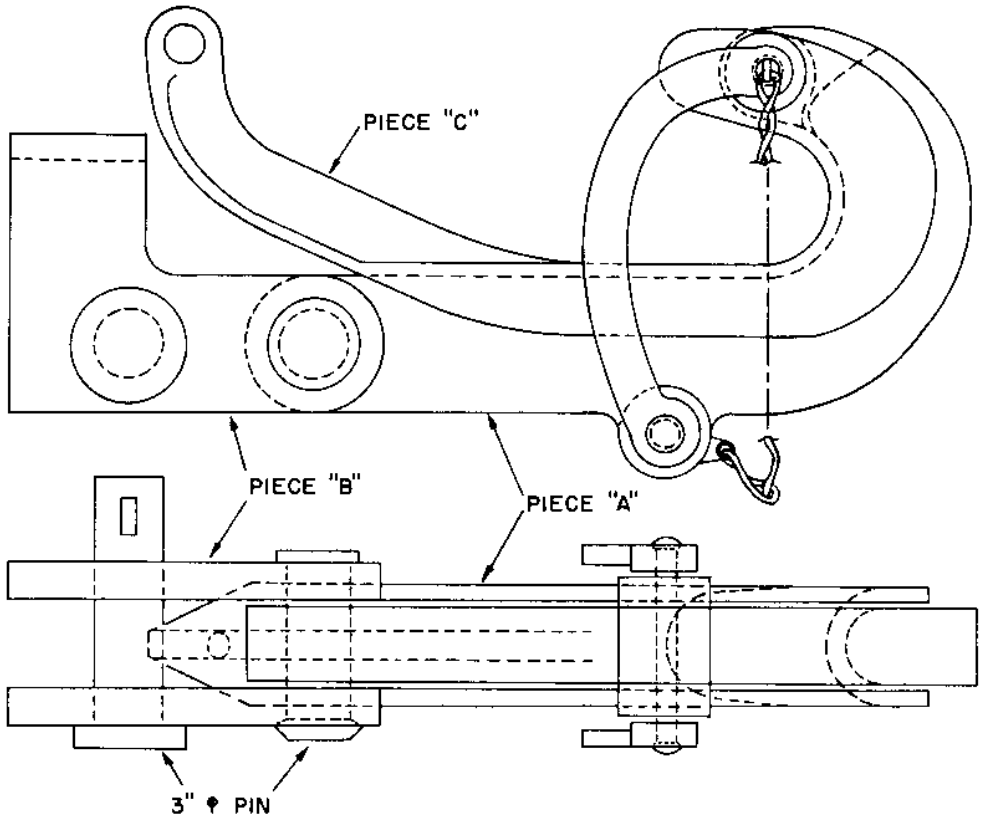

FOR MATERIAL USED, DIMENSIONS, AND GENERAL NOTES, SEE NAVFAC DRAWING 896091.

NOTES:

1. PROOF TEST 230,000 LBS.
2. PIECES "A" AND "B" AND 3" ϕ PINS SHALL BE RADIOGRAPHIC TESTED AFTER PROOF TESTING.
3. PIECE "C" SHALL BE GIVEN MAGNETIC PARTICLE INSPECTION.

Figure 8. Fitting Details — Release Hook for Mooring Buoy

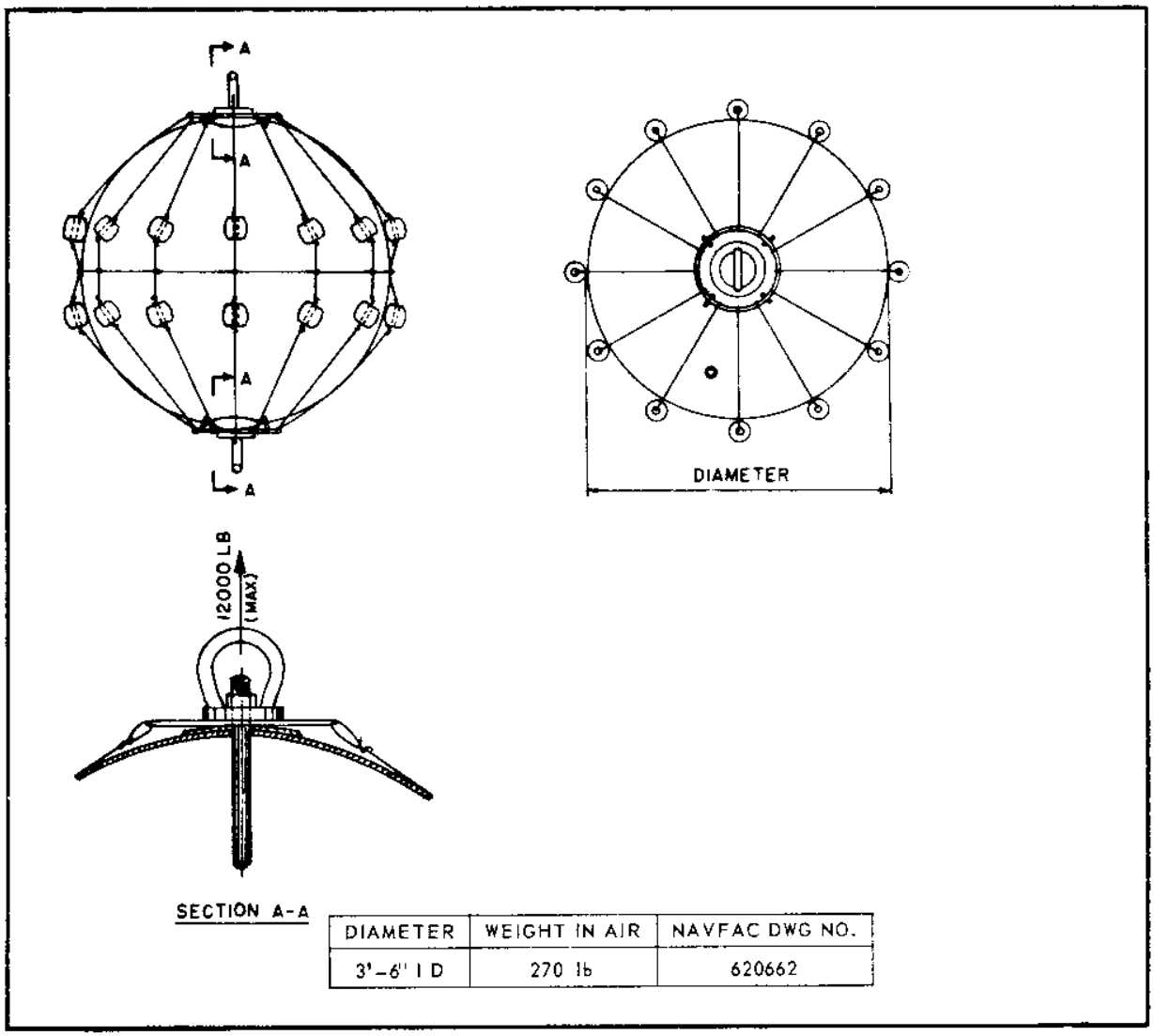

DIAMETER	WEIGHT IN AIR	NAVFAC DWG NO.
3'-6" I D	270 lb	620662

Figure 9. Standard Marker or Mooring Buoy

DIAMETER	HEIGHT	WEIGHT IN AIR	NAVFAC DWG NO.
9'-6" O D	5'-0"	7,700 lbs	620,659
10'-6" O D	6'-6"	9,600 lbs	620,659
10'-6" O D	7'-6"	10,100 lbs	620,659

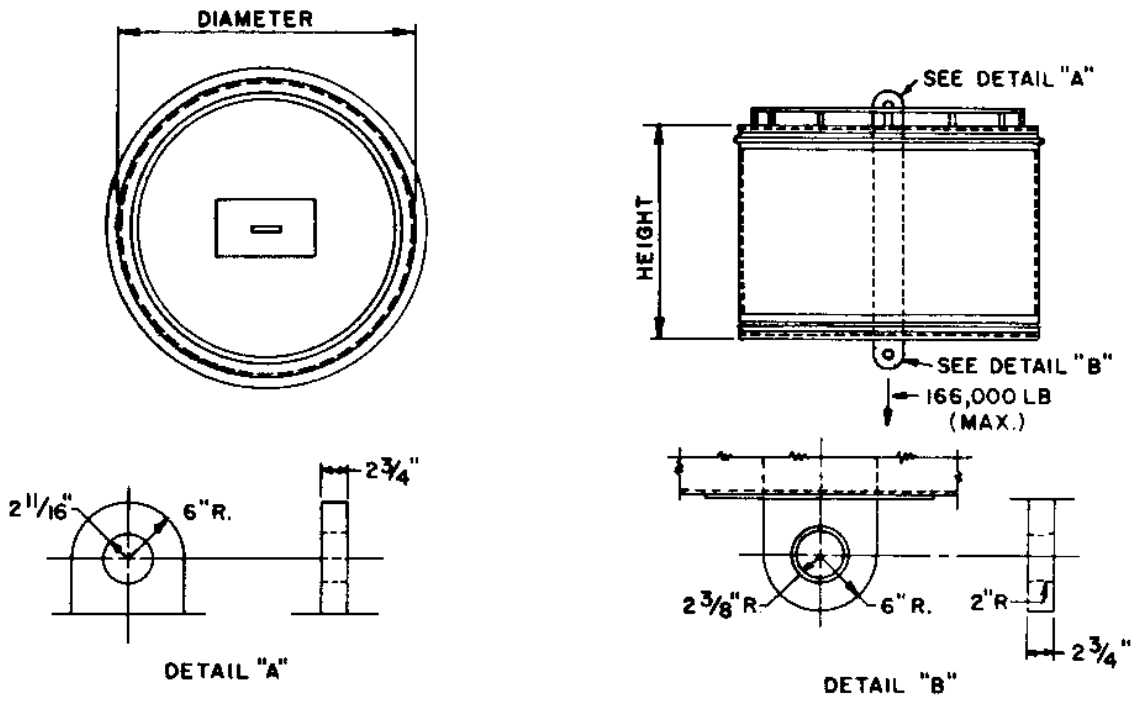

Figure 10. Tension Bar Mooring Buoy

DIAMETER	HEIGHT	WEIGHT IN AIR	NAVFAC DWG NO.
12'-0" O D	6'-0"	11,300 lbs	620,605

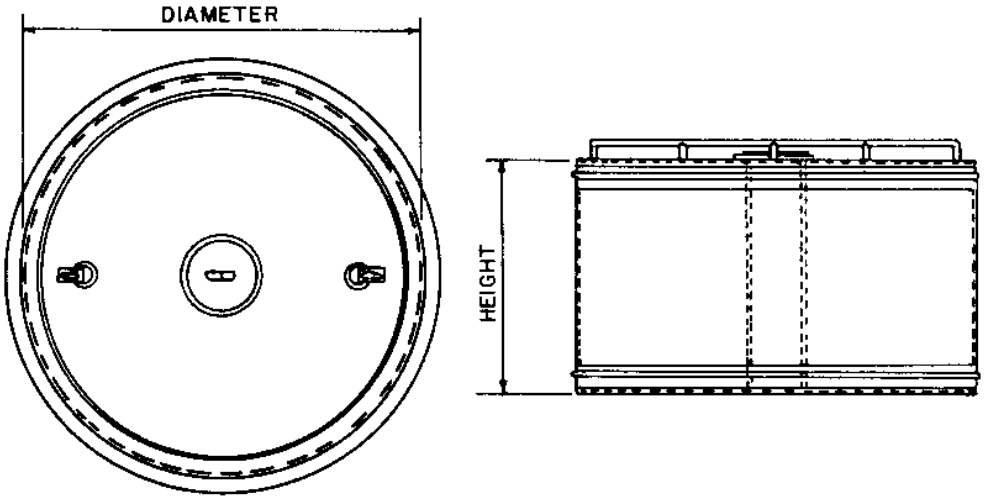

Figure 11. Hawsepipe Mooring Buoy

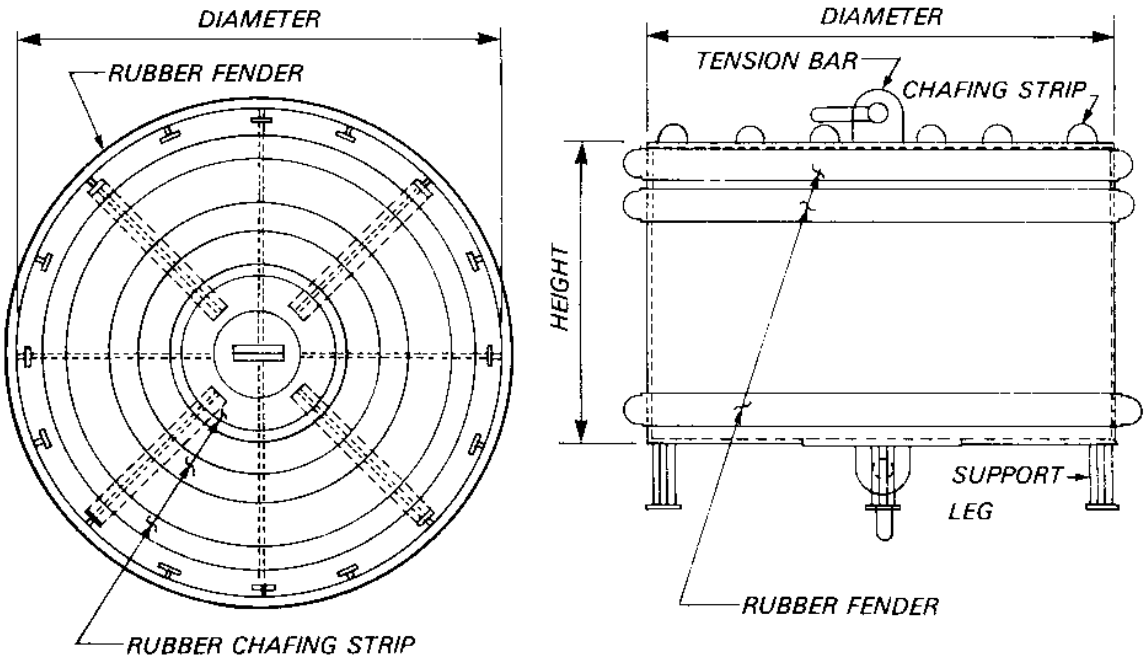

TOP PLAN

ELEVATION

DIAMETER	HEIGHT	WEIGHT IN AIR	NAVFAC DWG. NO.
15'-0"	9'-6"	34000 lbs.	1404065-1404067

THIS BUOY IS PROPOSED FOR USE IN THE AAA AND BBB CLASS MOORINGS

Figure 12. Tension Bar Mooring Buoy

THIS PAGE IS INTENTIONALLY BLANK

SECTION 7. AIDS TO NAVIGATION BUOYS

1. Buoy Components. The assembly of an aids to navigation buoy consists of an assortment of components. These components differ slightly with each type of buoy. For example, some buoys have a bridle as a component in their mooring system, whereas others may not require one. Figure 13 identifies the components of a typical aids to navigation buoy mooring system.

The U.S Coast Guard COMDTINST M16511.1, dated 22 Dec. 1978, was issued to provide technical data and methodology to select the buoy mooring chain length and sinker size; given the environmental conditions of windspeed, wave height and period, current, water depth, and bottom type. The chain length is selected to give the minimum watch circle radius for the given conditions.

2. U.S. Coast Guard Buoy Data. Table 120 lists the principal features of standard U.S. Coast Guard lighted and unlighted aids to navigation buoys. Sample illustrations of their configurations and components are shown in Figures 14 through 17, inclusive.

The U.S. Coast Guard also maintains standard unlighted steel and plastic buoys which are smaller than the previously described buoys. These are commonly of the "nun" (N) or "can" (C) type. They are listed in Table 121, and are illustrated in Figures 18, 19, and 20.

3. Moorings for Standard Aids to Navigation Buoys. The U.S. Navy has adopted Coast Guard-type buoys for use in its coastal facilities. Figures 21, 22, and 23 illustrate the features of specific buoys. Tables 122 and 123 present the bills of materials for these buoys and detail the quantities of mooring system components required for various water depths.

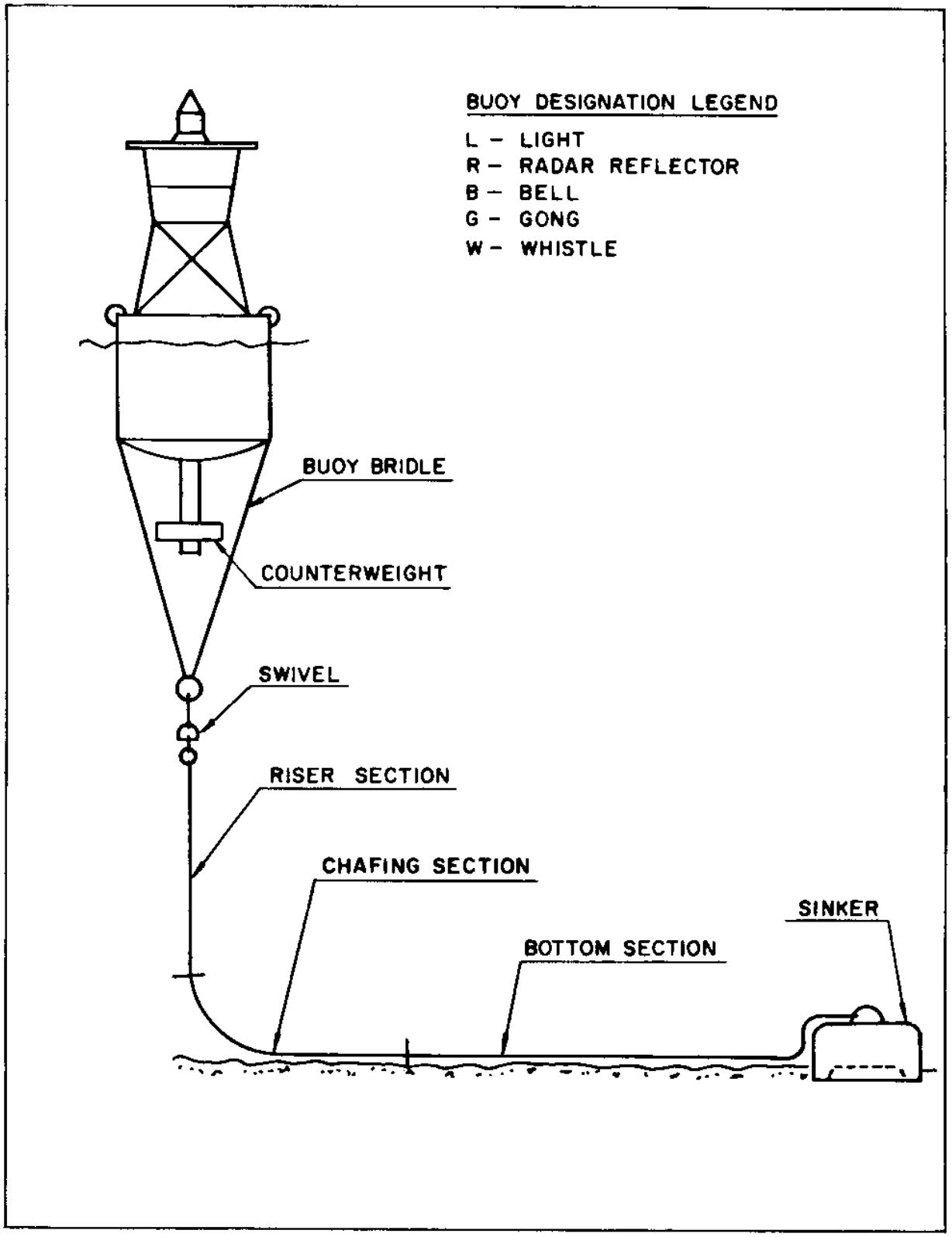

Figure 13. Buoy Mooring System Components

Table 120. 1962-Type Lighted and Unlighted Buoys

CHARACTERISTIC	BUOY													
	9x32 LR	9x32 LBR	9x32 LGR	9x32 LWR	8x26 LR	8x26 LBR	8x26 LGR	8x26 LWR	7x17 LR	6x20 LR	6x20 LBR	5x11 LR	3.5x8 LR	9x20 GorBR
Classification by Station Requirement	EXP	EXP	EXP	EXP	EXP	EXP	EXP	EXP	SEMI EXP	SEMI EXP	SEMI EXP	PRO	PRO	EXP
Visual Range of Daymark (Naut. Mi.)	4.2	4.2	4.2	4.2	3.6	3.6	3.6	3.6	2.75	2.3	2.3	1.6	1.3	3.3
Daymark Area (Sq. Ft.)	53	53	53	53	37.5	37.5	37.5	37.5	22.25	15	15	11	8	30
Radar Range (Naut. Mi.)	5.0	5.0	5.0	5.0	4.0	4.0	4.0	4.0	3.0	2.5	2.5	2.0	1.5	4.0
Pounds Per Inch of Immersion	340	340	340	300	270	270	270	250	205	150	150	105	50	340
Draft (Ft.-In.)	11'-9"	12'-2"	12'-3"	12'-11"	10'-1"	10'-3"	10'-3"	10'-9"	5'-6"	8'-8"	8'-9.5"	4'-1.5"	2'-9.25"	5'-5"
Freeboard (Ft.-In.)	4'-5"	4'	3'-11"	3'-3"	3'-3"	3'-1"	3'-1"	2'-2"	3'	2'-4.75"	2'-3.25"	2'-1.5"	1'-3.5"	2'
Focal Height of Light (Ft.-In.)	20'-2"	19'-9"	19'-8"	19'	15'-10"	15'-8"	15'-8"	15'-2"	11'-8"	10'-9.75"	10'-8.25"	7'-5.25"	5'-5.75"	- -
Weight (Lbs.)	17443	19091	19391	18616	11382	11917	11853	12131	7810	6023	6270	3004	1487	8110
Mooring Chain Size (In.)	1-1/2	1-1/2	1-1/2	1-1/2	1-1/4	1-1/4	1-1/4	1-1/4	1-1/8	1-1/8	1-1/8	3/4	3/4	1-1/4
Sinker Weight (Lbs.)	12750	12750	12750	12750	8500	8500	8500	8500	5000	5000	5000	4000	2000	5000
Bridle Size (In. x Ft.)	1-1/2 x18	1-1/2 x18	1-1/2 x18	1-1/2 x18	1-1/4 x15	1-1/4 x15	1-1/4 x15	1-1/4 x15	1-1/4 x15	1 x12	1 x12	1 x12	7/8 x10	1-1/4 x15

[1] EXP = Exposed and PRO = Protected.

Table 120. 1962-Type Lighted and Unlighted Buoys — Continued

CHARACTERISTIC	BUOY													
	9x32 LR	9x32 LBR	9x32 LGR	9x32 LWR	8x26 LR	8x26 LBR	8x26 LGR	8x26 LWR	7x17 LR	6x20 LR	6x20 LBR	5x11 LR	3.5x8 LR	9x20 GorBR
Power Units														
-No.	2	2	2	2	2	2	2	2	2	2	2	1	1	-
-Type[2]	B30	B30	B30	B30	B30	B30	B30	B30	B30	B30	B30	B10	B10	-
Minimum Freeboard (In.)	16	16	16	16	15	15	15	15	12	12	12	9	6	9
Minimum Mooring Depth (Ft.)	30	30	30	30	25	25	25	25	15	20	20	10	10	15
MAXIMUM MOORING DEPTH (Ft.) — One or Two 1000 A.H. Power Units — One size below	490	420	400	250	300	275	275	110	280	235	220	340	45	255
MAXIMUM MOORING DEPTH (Ft.) — One or Two 1000 A.H. Power Units — Recommended chain size	345	300	285	180	240	220	220	90	220	185	175	160	30	200
MAXIMUM MOORING DEPTH (Ft.) — One or Two 1000 A.H. Power Units — One size above	300	255	245	150	170	155	155	60	180	150	140	120	20	150
MAXIMUM MOORING DEPTH (Ft.) — One or Two 3000 A.H. Power Units — One size below	460	385	370	220	260	235	235	70	235	185	170	-	-	-
MAXIMUM MOORING DEPTH (Ft.) — One or Two 3000 A.H. Power Units — Recommended chain size	325	275	265	155	210	190	190	60	185	145	135	-	-	-
MAXIMUM MOORING DEPTH (Ft.) — One or Two 3000 A.H. Power Units — One size above	280	235	225	135	150	135	135	40	140	115	105	-	-	-
Maximum Current (Knots)	4-5	4-5	4-5	4-5	3-4	3-4	3-4	3-4	3-4	3-4	3-4	3-4	3	4
Audible Range of Bell, Gong, or Whistle (Naut. Mi.)	-	1/4	1/4	1/4	-	1/4	1/4	1/4	-	-	1/4	-	-	1/4

[2] B30 = Battery of 3000 Amp.-Hr. and B10 = Battery of 1000 Amp.-Hr.

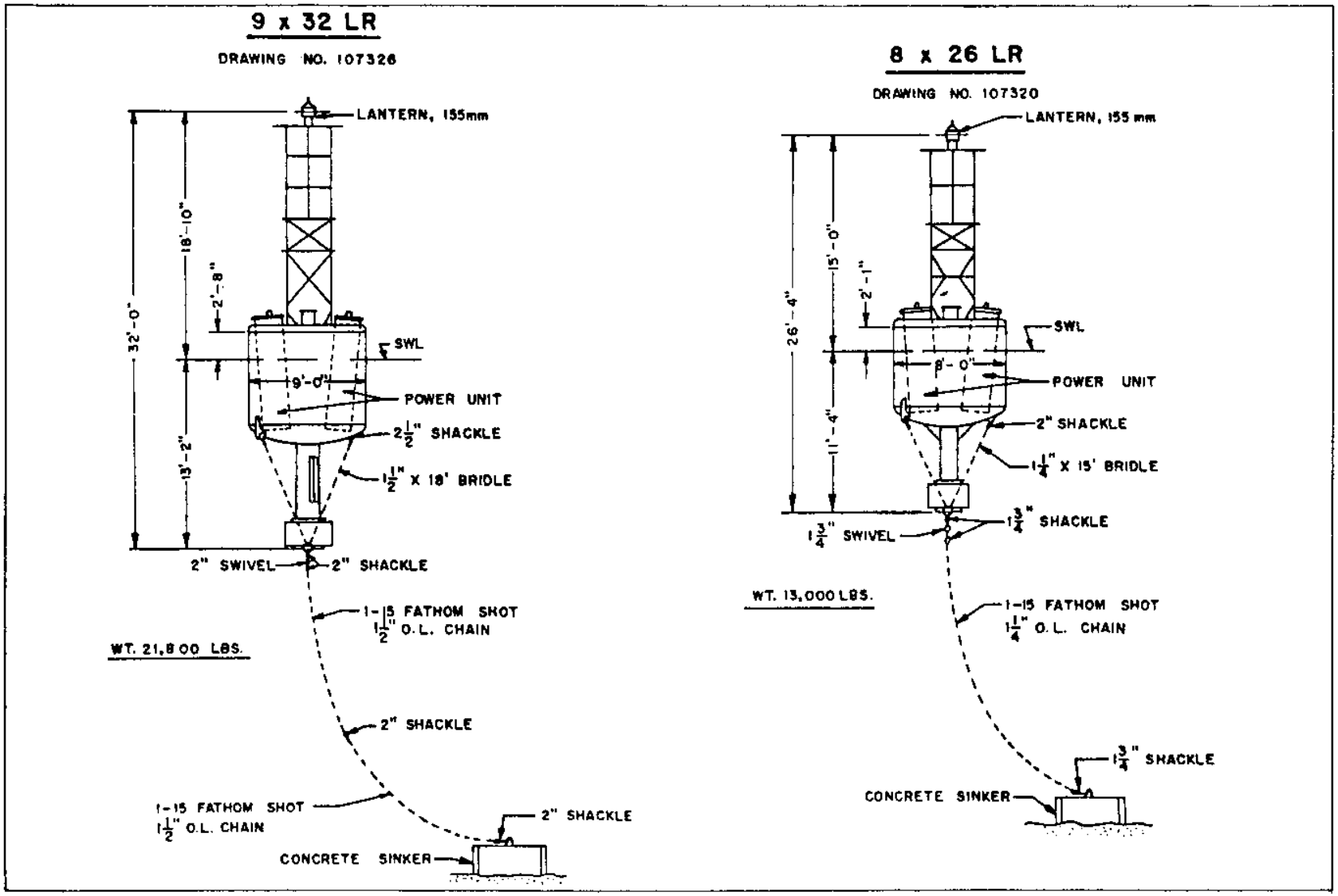

Figure 14. Moorings for Navigation Buoys

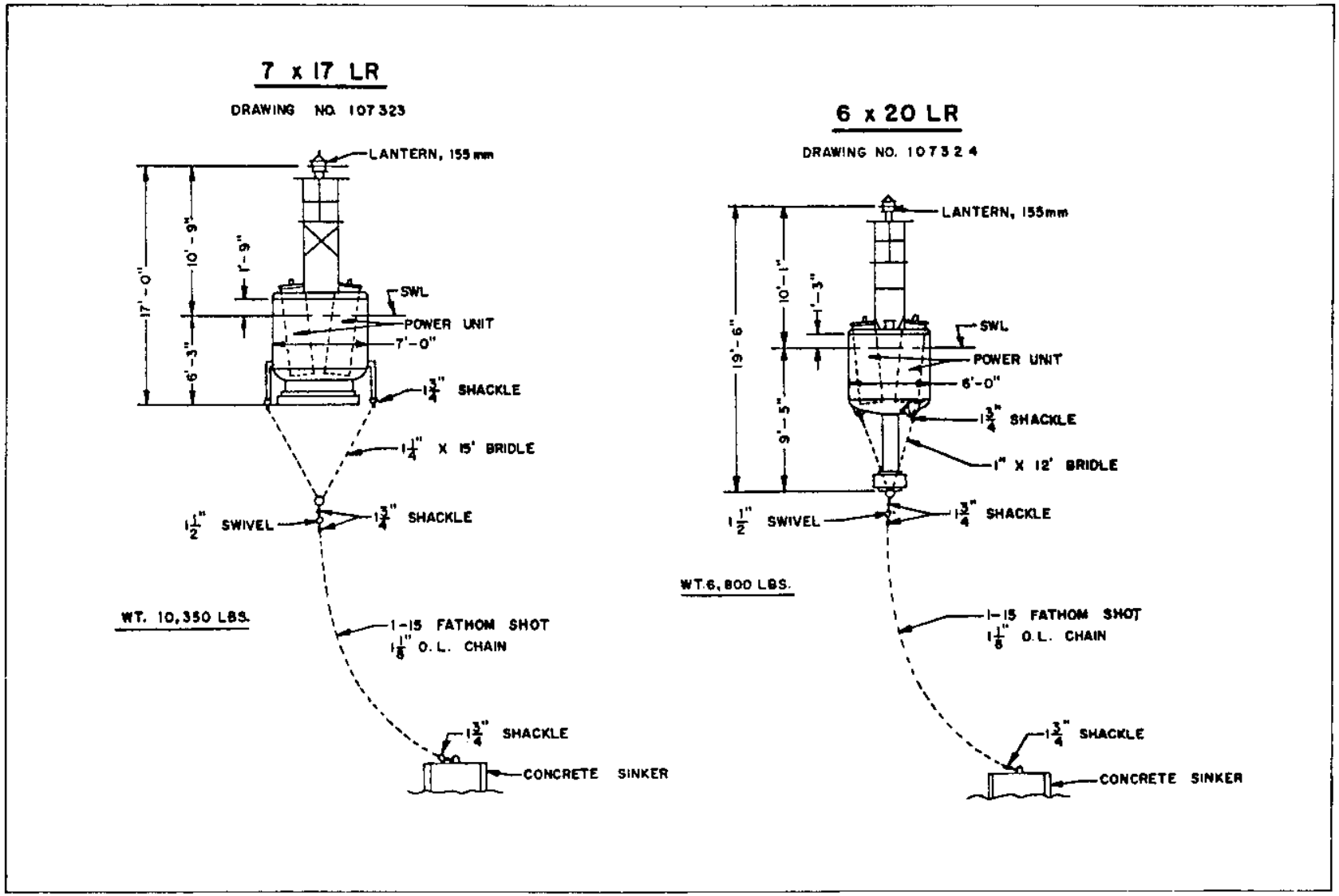

Figure 15. Moorings for Navigation Buoys

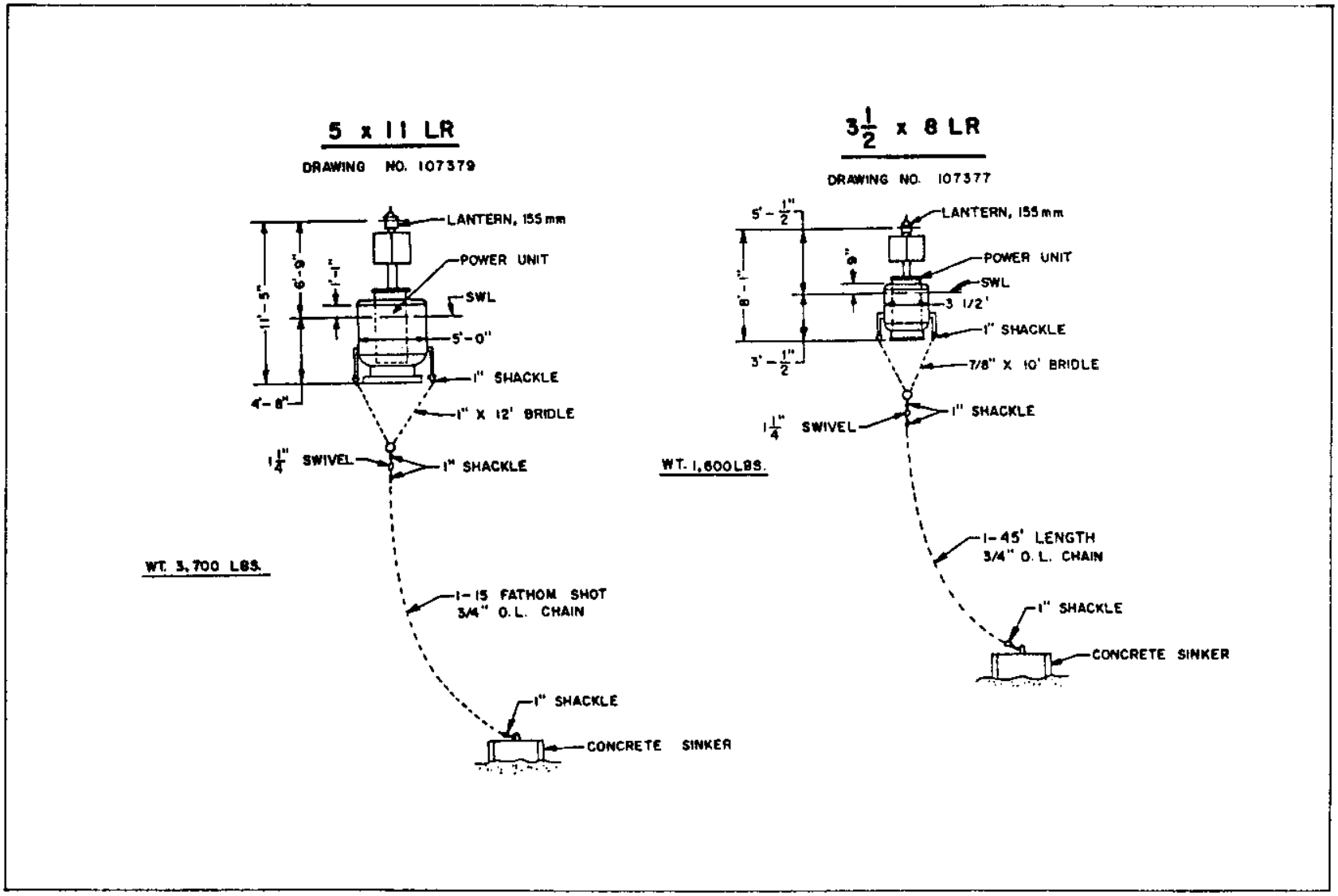

Figure 16. Moorings for Navigation Buoys

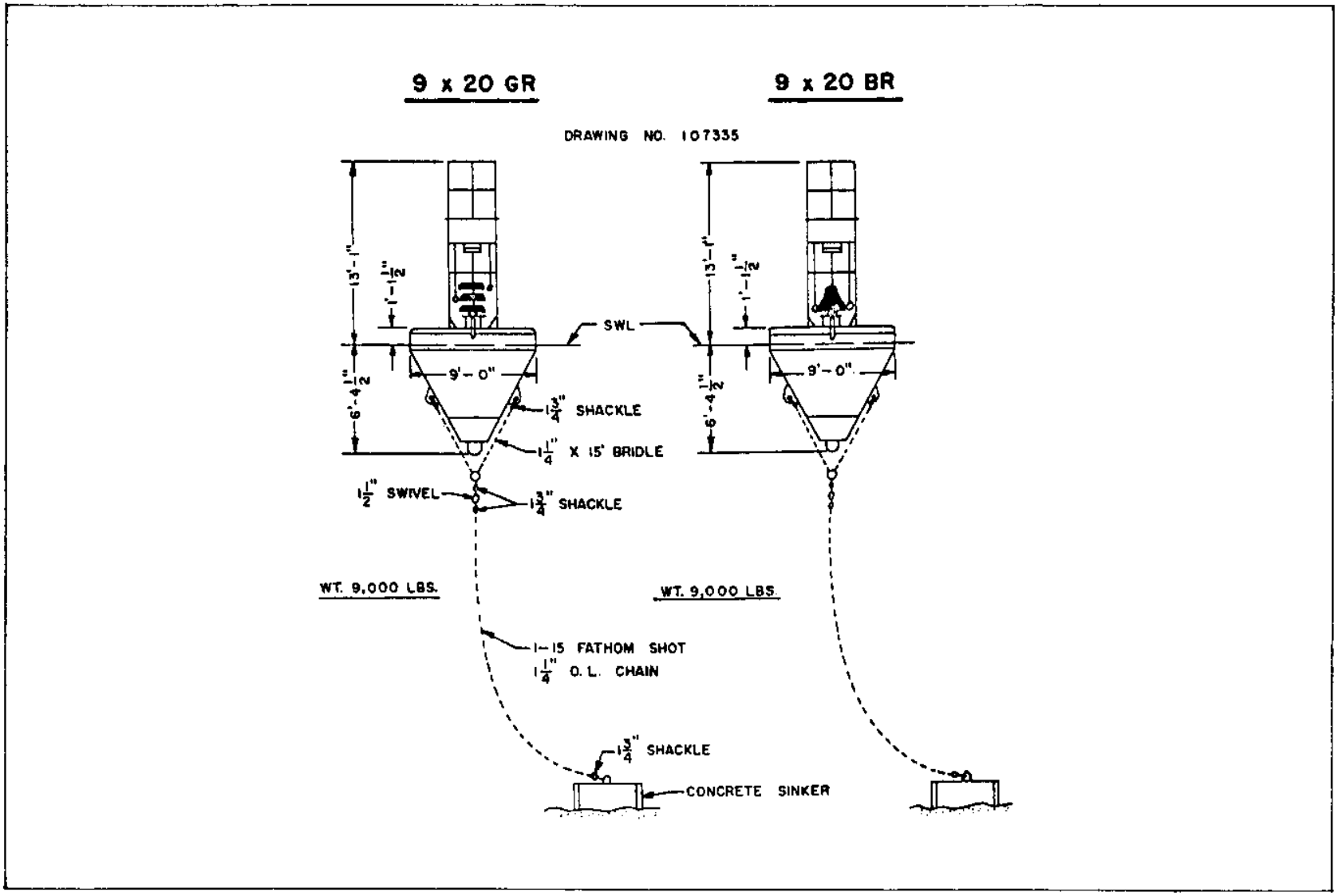

Figure 17. Moorings for Navgiation Buoys

Table 121. 1962-Type Unlighted Steel and Plastic Buoys

CHARACTERISTIC	BUOY 1CR	1NR	2CR	2NR	3CR	3NR	4CR	4NR	5CR	5NR	6CR	6NR
Classification by Station Requirement[1]	EXP	EXP	EXP	EXP	SEMI EXP	SEMI EXP	PRO	PRO	PRO	PRO	PRO	PRO
Visual Range of Daymark (Naut. Mi.)	4.0	3.9	3.25	2.9	1.4	1.3	1.25	1.25	1.0	1.0	1.0	1.0
Daymark Area (Sq. Ft.)	49	42.5	27	22	10.25	9.25	7.87	6.6	5.6	5.0	4.5	4.87
Radar Range (Naut. Mi.)	3.5	3.5	2.5	3.0	1.5	1.75	1.5	1.5	1.25	1.25	1.0	1.0
Pounds Per Inch of Immersion	105	105	67	67	38	38	21	21	16	16	9	9
Draft (Ft. - In.)	8'	7'-11"	6'-1"	6'	4'	3'-11"	5'	5'	4'-10"	4'-11"	3'-10"	4'
Freeboard (Ft. - In.)	6'	6'-1"	3'-11"	4'	2'-8"	2'-9"	2'-11"	2'-8"	2'-6"	2'-5"	2'-6"	2'-8"
Weight (lbs.)	5600	5400	2700	2600	955	935	465	470	675	680	160	165
Mooring Chain Size (In.)	1-1/8	1-1/8	7/8	7/8	3/4	3/4	7/16	7/16	7/16	7/16	7/16	7/16
Sinker Weight (lbs.)	5000	5000	4000	4000	3000	3000	2000	2000	2000	2000	500	500
Minimum Freeboard (Ft.-In.)	2'-5"	2'-5"	1'	1'	9"	9"	1'	1'	6"	6"	6"	6"
Minimum Mooring Depth (Ft.)	15	15	15	15	10	10	10	10	6	6	6	6
Maximum Current (Knots)	6	6	6	6	5	5	5	5	3	3	2.5	2.5
Maximum Mooring Depth (Ft.) — One size below	300	306	275	282	215	225	-	-	-	-	-	-
Maximum Mooring Depth (Ft.) — Recommended chain size	236	241	200	205	102	107	132	115	105	100	60	64
Maximum Mooring Depth (Ft.) — One size above	188	192	155	160	75	78	119	104	95	90	53	58

[1] EXP = Exposed and PRO = Protected.

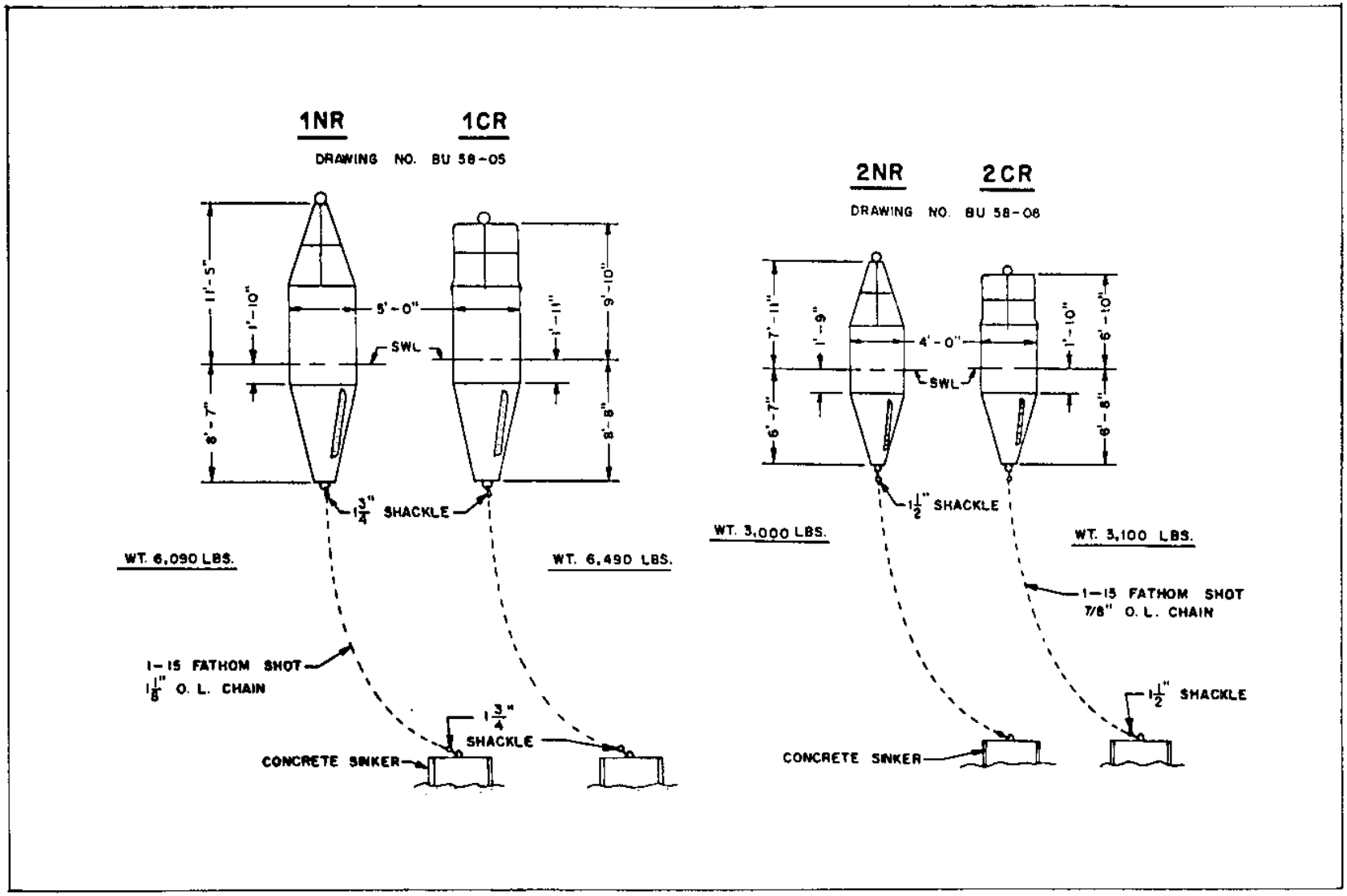

Figure 18 . Moorings for Navigation Buoys

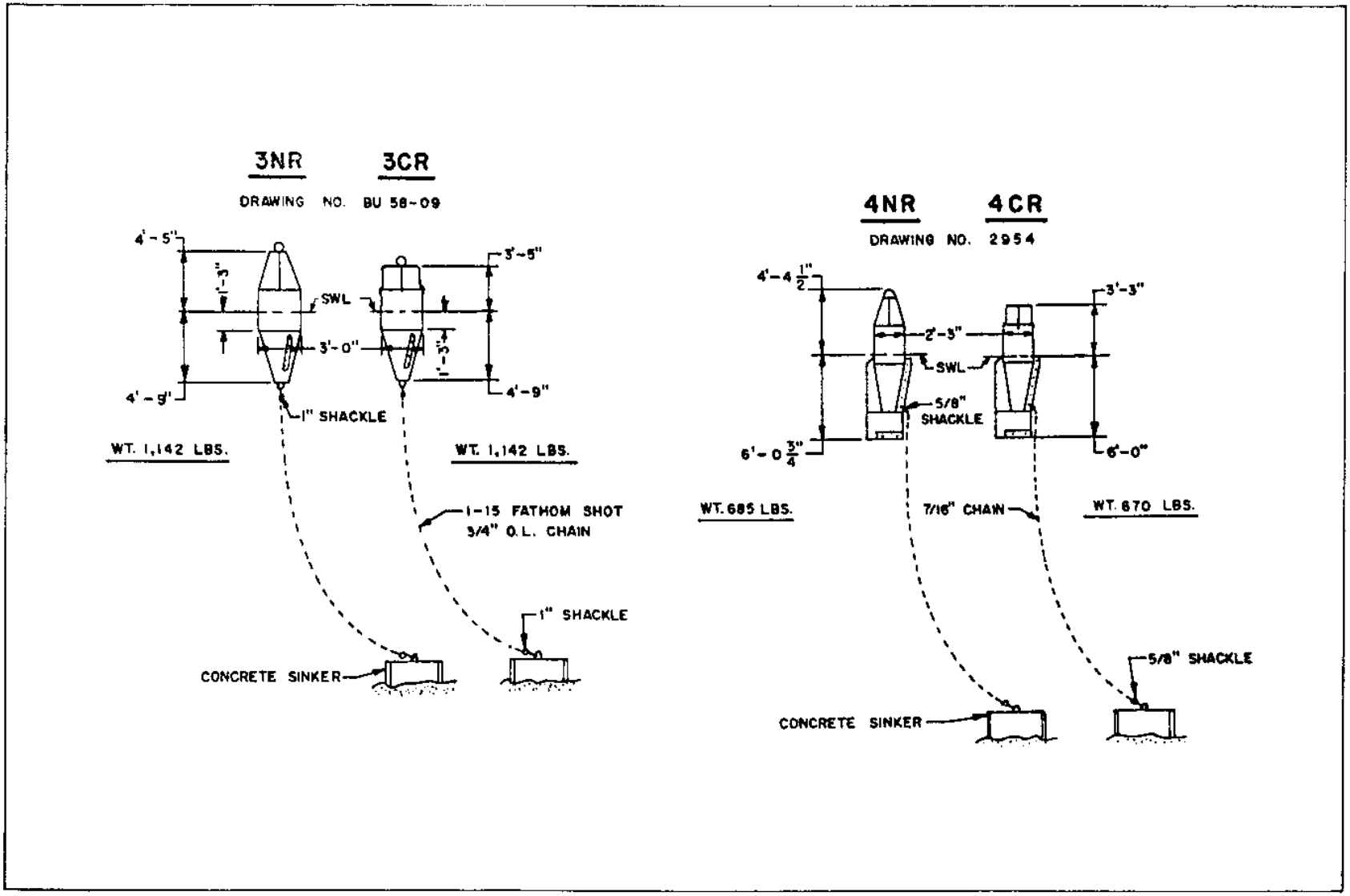

Figure 19 . Moorings for Navigation Buoys

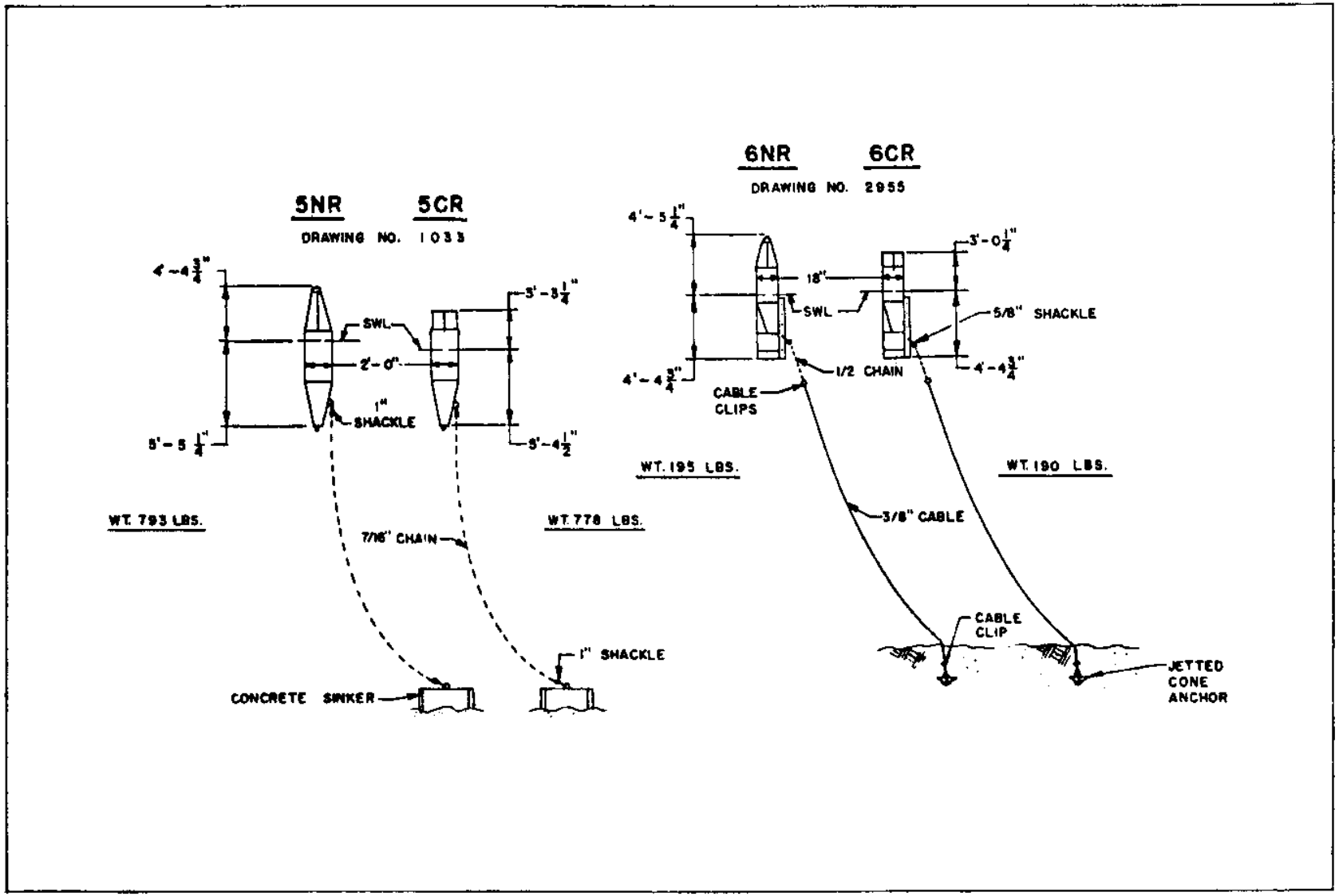

Figure 20. Moorings for Navigation Buoys

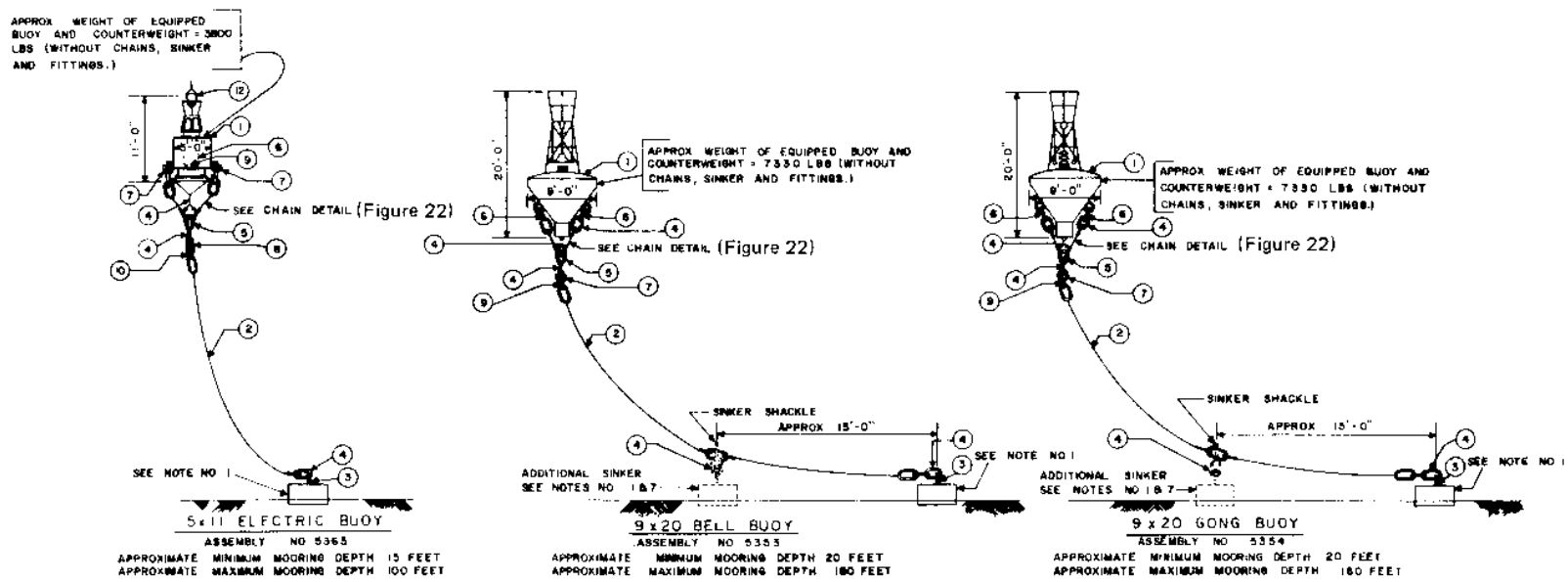

Notes:
1. Sinker size to match hairpin and bags of cement at required depth.
2. If prefabricated sinkers are required, substitute "concrete sinkers," given in section 6, table 119 to correspond with appropriate hairpins and bags of cement listed in Bill of Materials (Table 122).
3. Moorings are designed for a 4-knot current.
4. Mooring depth based on mean high water.
5. Refer to section 6 for chain, fittings, and sinker details.
6. For other than basic depth, delete hairpin and bags of cement listed under Bill of Materials and add items shown in table 123.
7. Attach additional sinker, if required, approximately 15 feet from first sinker. Include appropriate material.
8. For more detailed information including installation, maintenance, and use of buoys, refer to U.S. Coast Guard Aids to Marine Navigation Manual CG-222 and Aids to Marine Navigation of the U.S. CG-193.
9. Lanterns listed under Bill of Materials have clear lenses if filters are needed.
10. Spar buoys have been used as channel markers and information concerning these is as follows: Generally constructed of timber of a diameter of 10" to 20" and a length of 20' to 50' and shackled to a concrete sinker. Due to inherent waterlogging requiring beaching twice a year for drying as well as standbys, the use of timber spar buoys is not recommended.
11. List of spare materials in table 122 is to be included with materials ordered for assemblies specified, regardless of water depth.

Reference drawings	
Buoy	C.G. dwg No.
9 × 20 B & 9 × 20 G	BU-52-19
5 × 11 E	BU-52-17
7 × 17 E	BU-52-16
9 × 32 WE	BU-52-12
8 × 26 BE	BU-52-11
6 × 20 E	BU-52-13
CANS	BU-51-13

Figure 21. Moorings for Navigation Buoys

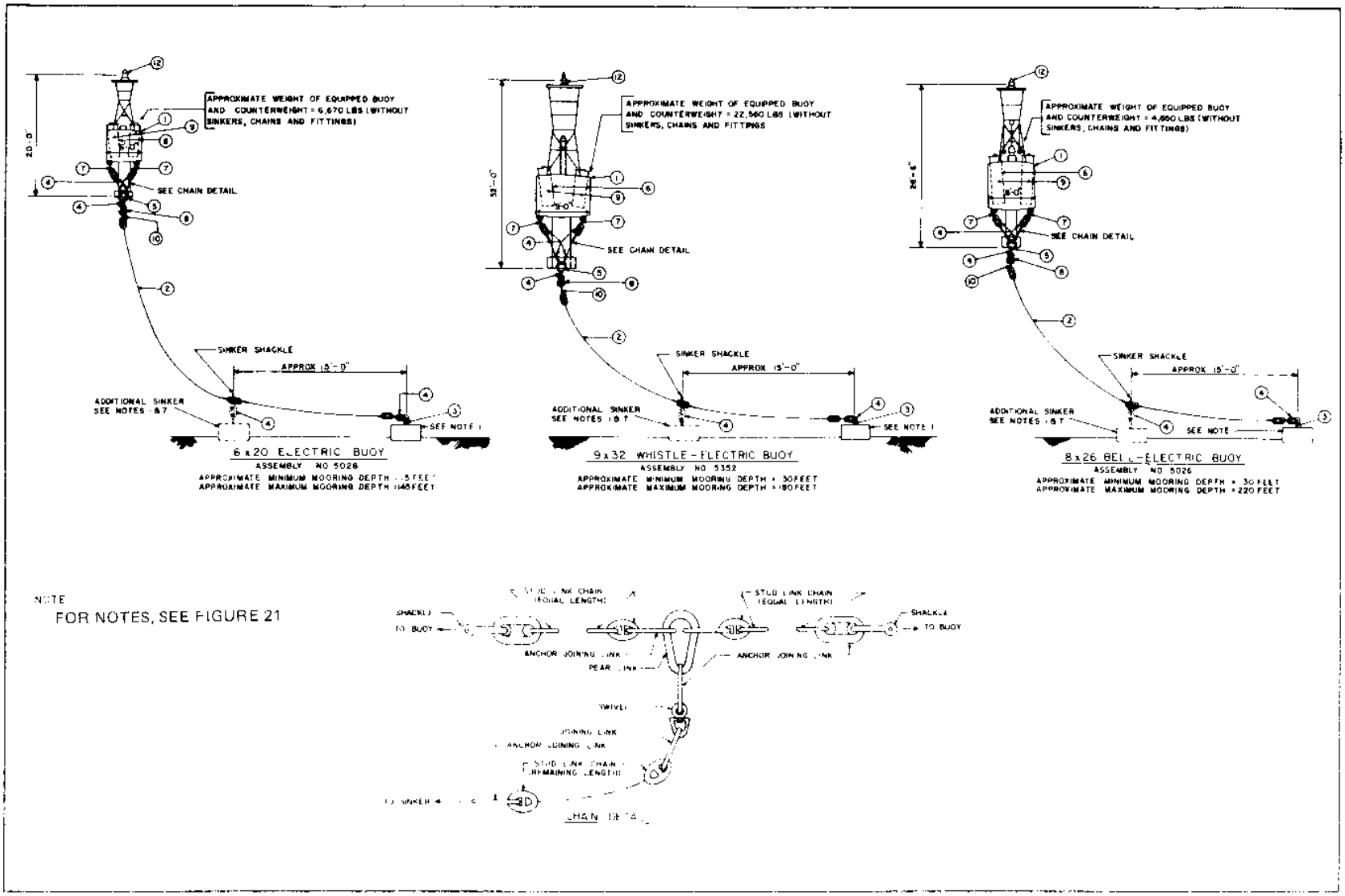

Figure 22. Moorings for Navigation Buoys

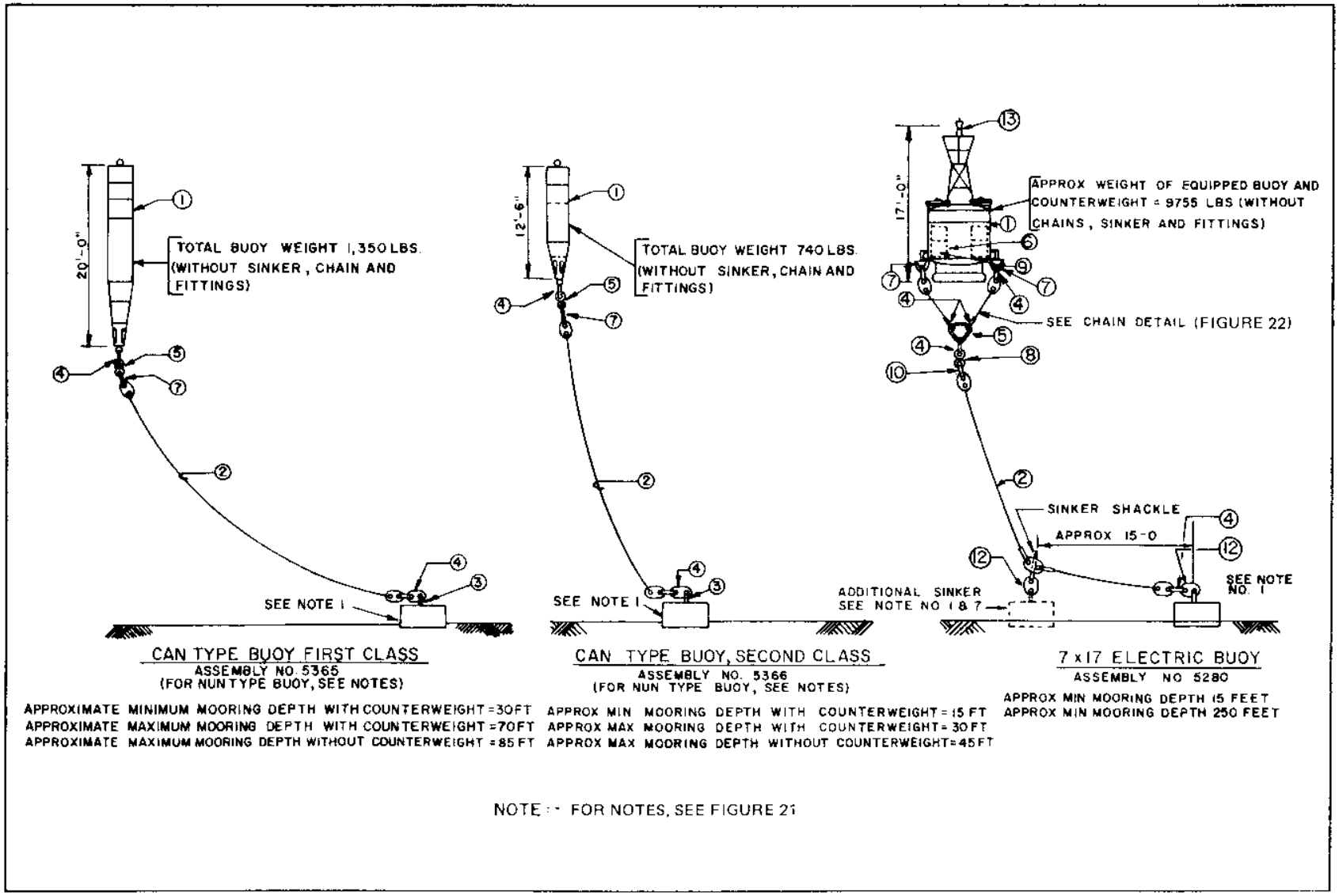

Figure 23. Moorings for Navigation Buoys

Table 122. Bills of Materials

Assembly No.	5026			5028			5280		
Buoy	8x26 BE			6x20 E			7x17 E		
Basic Depth (ft.)	30			30			30		
Description of Item	Reqd.	Spare[1]	Chain Size	Reqd.	Space[1]	Chain Size	Reqd.	Spare[1]	Chain Size
Chain (90' shot)	1	-	1-1/4"	1	-	1"	1	-	1"
Chain (45' shot)	-	-	-	-	-	-	-	-	-
Hairpin	1	-	2-1/4" (for 6500 lb. sinker)	1	-	2" (for 5000 lb. sinker)	1	-	2" (for 5000 lb. sinker)
Anchor joining link	6	1	1-1/4"	6	1	1"	6	1	1"
Anchor joining link	-	-	-	-	-	-	1	1	1-1/4"
Pear link	1	1	1-1/4"	1	1	1-1/4"	1	1	1-1/4"
Battery rack	2	-	-[2]	2	-	-	2	-	-
Shackle	2	1	2"	2	1	1-1/2" to 2"	2	1	1-3/4"[2]
Swivel	1	1	1-1/4"	1	1	1"	1	1	1"
Battery	24	-	-	12	-	-	12	-	-
Joining Link	1	1	1-1/4"	1	1	1"	1	1	1"
Cement (94 lb. bag)	10	-	-	7	-	-	7	-	-
Lantern, marine, electric	1	-	-	1	-	-	1	-	-
Split key	2	1	for 2" shackle	-	-	-	2	1	for 1-3/4" shackle

Assembly No.	5352			5353			5354		
Buoy	9x32 NE			9x20 B			9x20 G		
Basic Depth (ft.)	30			30			30		
Description of Item	Reqd.	Spare[1]	Chain Size	Reqd.	Spare[1]	Chain Size	Reqd.	Spare[1]	Chain Size
Chain (90' shot)	1	-	1-1/2"	1	-	1-1/4"	1	-	1-1/4"
Chain (45' shot)	-	-	-	-	-	-	-	-	-
Hairpin	1	-	3" (for 8200 lb. sinker)	1	-	2" (for 5000 lb. sinker)	1	-	2" (for 5000 lb. sinker)
Anchor joining link	6	1	1-1/2"	6	1	1-1/4"	6	1	1-1/4"
Anchor joining link	-	-	-	-	-	-	-	-	-
Pear link	1	1	1-3/4"	1	1	1-1/4"	1	1	1-1/4"
Battery rack	2	-	-	-	-	-[2]	-	-	-[2]
Shackle	2	1	2-1/2"[2]	2	1	2"[2]	2	1	2"[2]
Swivel	1	1	1-1/2"	1	1	1-1/4"	1	1	1-1/4"
Battery	24	-	-	-	-	-	-	-	-
Joining link	1	1	1-1/2"	1	1	1-1/4"	1	1	1-1/4"
Cement (94 lb. bag)	12	-	-	7	-	-	7	-	-
Lantern, marine, electric	1	-	-	-	-	-	-	-	-
Split key	2	1	for 2-1/2" shackle	2	1	for 2" shackle	2	1	for 2" shackle

Assembly No.	5363			5365			5366		
Buoy	5x11 E			3x20 CAN/NUN			2.5x12.5 CAN/NUN		
Basic Depth (ft.)	30			30			20		
Description of Item	Reqd.	Spare[1]	Chain Size	Reqd.	Spare[1]	Chain Size	Reqd.	Spare[1]	Chain Size
Chain (90' shot)	1	-	3/4"	1	-	1"	-	-	-
Chain (45' shot)	-	-	-	-	-	-	1	-	3/4"
Hairpin	1	-	1-3/4"	1	-	2" (for 5000 lb. sinker)	1	-	1-3/4" (for 3000 lb. sinker)
Anchor joining link	6	1	3/4"	2	1	1"	2	1	3/4"
Anchor joining link	-	-	-	-	-	-	-	-	-
Pear link	1	1	3/4"	-	-	-	-	-	-
Battery rack	1	-	-[2]	-	-	-	-	-	-
Shackle	2	1	1"[2]	-	-	-	-	-	-
Swivel	1	1	3/4"	1	1	1"	1	1	3/4"
Battery	6	-	-	-	-	-	-	-	-
Joining link	1	1	3/4"	1	1	1"	1	1	3/4"
Cement (94 lb. bag)	5	-	-	7	-	-	5	-	-
Lantern, marine, electric	1	-	-	-	-	-	-	-	-
Split key	2	1	for 1" shackle	-	-	-	-	-	-

[1] Ship to advanced bases regardless of water depth.

[2] See CG dwg. BU-45-01.

Table 123. Information for Other than Basic Depth [1]

Depth of Water (ft.)	Assembly 5026							Assembly 5028								Assembly 5280									Assembly 5352						
	chain (90' shot) 1-1/4"	chain (45' shot) 1-1/4"	joining link 1-1/4"	A joining link 1-1/4"	hairpin 3"	shackle 1"-1-1/2"	(94 lb. bag) Cement	chain (90' shot) 1"	chain (45' shot) 1"	joining link 1"	A joining link 1"	hairpin 2-1/4"	HP (5000 lb. CS) 2"	shackle 1"-1-1/2"	(94 lb. bag) Cement	chain (90' shot) 1"	chain (45' shot) 1"	joining link 1"	A joining link 1-1/4"	hairpin 2-1/4"	hairpin 3"	HP (5000 lb. CS) 2"	shackle 1"-1-1/2"	(94 lb. bag) Cement	chain (90' shot) 1-1/2"	chain (45' shot) 1-1/2"	joining link 1-1/2"	A joining link 1-1/2"	hairpin 3"	shackle 1-1/2"-2"	(94 lb. bag) Cement
20 to 30	-	-	-	-	-	-	-	-	-	-	-	-	-	-	-	-	-	-	-	-	-	-	-	-	-	-	-	-	-	-	-
30 to 45	0	0	0	0	1	0	12	0	1	1	0	1	0	0	10	0	1	1	0	0	0	1	0	7	0	1	1	0	1	0	12
45 to 55	0	0	1	0	0	0	12	0	1	1	0	1	0	0	10	0	1	1	0	1	0	0	0	10	0	1	1	1	2	1	24
55 to 65	1	0	1	0	1	0	12	1	0	1	0	1	0	0	10	1	0	1	0	1	0	0	0	10	1	0	1	1	2	1	24
65 to 75	1	0	1	0	1	0	12	1	0	1	0	1	0	0	10	1	0	1	0	1	0	0	0	10	1	0	1	1	2	1	24
75 to 85	1	1	2	0	1	0	12	1	0	1	0	1	0	0	10	1	1	2	0	1	0	0	0	10	1	1	2	1	2	1	24
85 to 100	1	1	2	1	2	1	24	1	1	2	0	1	0	0	10	1	1	2	0	1	0	0	0	10	1	1	2	1	2	1	24
100 to 115	2	0	2	1	2	1	24	1	1	2	0	1	0	0	10	2	0	2	0	0	1	0	0	12	2	0	2	1	2	1	24
115 to 130	2	0	2	1	2	1	24	2	0	2	1	0	2	1	14	2	1	3	0	0	1	0	0	12	2	0	2	1	2	1	24
130 to 145	2	1	3	1	2	1	24	2	1	3	1	0	2	1	14	2	1	3	0	0	1	0	0	12	2	1	3	1	2	1	24
145 to 160	3	0	3	1	2	1	24	-	-	-	-	-	-	-	-	3	0	3	0	0	1	0	0	12	3	0	3	1	2	1	24
160 to 180	3	0	3	1	2	1	24	-	-	-	-	-	-	-	-	3	1	4	1	0	2	0	1	24	3	0	3	1	2	1	24
180 to 200	3	1	4	1	2	1	24	-	-	-	-	-	-	-	-	3	1	4	1	0	2	0	1	24	-	-	-	-	-	-	-
200 to 220	3	1	4	1	2	1	24	-	-	-	-	-	-	-	-	4	0	4	1	0	2	0	1	24	-	-	-	-	-	-	-
220 to 250	-	-	-	-	-	-	-	-	-	-	-	-	-	-	-	4	1	5	1	0	2	0	1	24	-	-	-	-	-	-	-

[1] Delete hairpin and bags of cement from Basic Depth Bill of Materials and add the items listed in this table to obtain the Bill of Materials for a particular depth.

Table 123. Information for Other than Basic Depth [1] – Continued

Depth of Water (ft.)	Assembly 5353 and 5354: chain (90' shot) 1-1/4"	chain (45' shot) 1-1/4"	joining link 1-1/4"	A joining link 1-1/4"	hairpin 2-1/4"	hairpin 3"	HP (5000 lb. CS) 2"	1"-t-1/2" shackle	(94 lb. bag) Cement	5363: chain (90' shot) 3/4"	chain (45' shot) 3/4"	joining link 3/4"	hairpin 1-3/4"	HP (4000 lb. CS) 2"	(94 lb. bag) Cement	5365: chain (90' shot) 1"	chain (45' shot) 1"	joining link 1"	hairpin 2-1/4"	HP (5000 lb. CS) 2"	(94 lb. bag) Cement	5366: chain (90' shot) 3/4"	chain (45' shot) 3/4"	joining link 3/4"	hairpin 1-3/4"	(94 lb. bag) Cement
20 to 30	-	-	-	-	-	-	-	-	-	-	-	-	-	-	-	-	-	-	-	-	-	0	0	0	0	5
30 to 45	0	1	1	0	0	0	1	0	7	0	1	1	1	0	5	0	0	0	0	1	7	0	1	1	1	5
45 to 55	0	1	1	0	1	0	0	0	10	0	1	1	1	0	5	0	1	1	1	0	10	-	-	-	-	-
55 to 65	1	0	1	0	1	0	0	0	10	0	1	1	0	1	6	0	1	1	1	0	10	-	-	-	-	-
65 to 75	1	0	1	0	1	0	0	0	10	1	0	1	0	1	6	0	1	1	1	0	10	-	-	-	-	-
75 to 85	1	0	1	0	1	0	0	0	10	1	0	1	0	1	6	1	0	1	1	0	10	-	-	-	-	-
85 to 100	1	1	2	0	0	1	0	0	12	1	1	2	0	1	6	-	-	-	-	-	-	-	-	-	-	-
100 to 115	2	0	2	0	0	1	0	0	12	-	-	-	-	-	-	-	-	-	-	-	-	-	-	-	-	-
115 to 130	2	0	2	0	0	1	0	0	12	-	-	-	-	-	-	-	-	-	-	-	-	-	-	-	-	-
130 to 145	2	1	3	0	0	1	0	0	12	-	-	-	-	-	-	-	-	-	-	-	-	-	-	-	-	-
145 to 160	2	1	3	1	0	2	0	1	24	-	-	-	-	-	-	-	-	-	-	-	-	-	-	-	-	-
160 to 180	3	0	3	1	0	2	0	1	24	-	-	-	-	-	-	-	-	-	-	-	-	-	-	-	-	-
180 to 200	-	-	-	-	-	-	-	-	-	-	-	-	-	-	-	-	-	-	-	-	-	-	-	-	-	-
200 to 220	-	-	-	-	-	-	-	-	-	-	-	-	-	-	-	-	-	-	-	-	-	-	-	-	-	-
220 to 250	-	-	-	-	-	-	-	-	-	-	-	-	-	-	-	-	-	-	-	-	-	-	-	-	-	-

[1] Delete hairpin and bags of cement from Basic Depth Bill of Materials and add the items listed in this table to obtain the Bill of Materials for a particular depth.

Table 124. Chain for Buoy Bridles[1]

Assembly No.	Buoy	2 lengths of	1 length of
5026	8 x 26 BE	7'-6" (18 links)	75'-0"
5028	6 x 20 E	6'-0" (18 links)	78'-0"
5280	7 x 17 E	7'-6" (22 links)	75'-0"
5352	9 x 32 WE	9'-0" (18 links)	72'-0"
5353	9 x 20 B	7'-6" (18 links)	75'-0"
5354	9 x 20 G	7'-6" (18 links)	75'-0"
5363	5 x 11 E	6'-0" (24 links)	78'-0"

[1] Stud link chain listed under Bill of Materials to be cut into three lengths in accordance with above table. The two equal lengths are attached to the buoy and the remaining length leads to the sinker.

REFERENCES

Jane's Fighting Ships, Moore, John E., Franklin Watts, Inc., New York, NY 1978.

NAVFAC Documents, Department of Defense activities may obtain copies of Design Manuals and P-Publications from the Commanding Officer, Naval Publications and Forms Center, 5801 Tabor Avenue, Philadelphia, PA 19120; Department of Defense activities must use the Military Standard Requisitioning and Issue Procedure (MILSTRIP), using the stock control number obtained from NAVSUP Publication 2002.

Rules for Building and Classing Steel Vessels, American Bureau of Shipping, 65 Broadway, New York, NY.

Commercial organizations may procure Design Manuals and P-Publications from the Superintendent of Documents, U. S. Government Printing Office, Washington, DC 20420.

Military/Federal and NAVFAC Guide Specifications are available to all parties, free of charge, from the Commanding Officer, Naval Publications and Form Center, 5801 Tabor Avenue, Philadelphia, PA 19120, Telephone: Autovon (DOD only): 442-3321, Commercial: (215) 697-3321.

United States Coast Guard Documents, available from U. S. Coast Guard, Washington, DC 20590.

COMDTINST M16511.1, Buoy Mooring Selection Guide for Chain Moorings;
CG-193, Aids to Marine Navigation of the U.S.;
CG-222, Aids to Marine Navigation Manual.

BIBLIOGRAPHY

A Re-analysis of the Original Test Data for the Taylor Standard Series, Gertler, M., David Taylor Model Basin, Bethesda, MD.

Big Tankers and Their Reception, Permanent International Association of Navigation Congresses, Brussels, Belgium.

Design and Construction of Ports and Marine Structures, Quinn, A. De F., McGraw-Hill Book Co., New York, NY.

Forces on Ships Moored in Protected Waters, Altman, R., Hydronautics, Inc., Laurel, MD.

Guidelines and Recommendations for the Safe Mooring of Large Ships at Piers and Sea Islands, Oil Companies International Marine Forum, London, England.

Port Engineering, Bruun, P., Gulf Publishing Co., Houston, TX.

Principles of Naval Architecture, Comstock, J. P. (ed.), Society of Naval Architects and Marine Engineers, New York, NY.

Preliminary Mooring Data for DD 692 Class (Jan. - Feb. 1946), David Taylor Model Basin, Bethesda, MD.

Preliminary Mooring Data for CVE 55 Class (Mar. - July 1946), David Taylor Model Basin, Bethesda, MD.

Preliminary Mooring Data for DD 692 Class (Jan. - June 1946), David Taylor Model Basin, Bethesda, MD.

Preliminary Mooring Data for SS 212 Class (May - July 1946), David Taylor Model Basin, Bethesda, MD.

Proceedings of the Princeton University Conference on Berthing and Cargo Handling in Exposed Places, Princeton, NJ.

Report of Working Group I, International Commission for the Reception of Large Ships, Annex to Bulletin No. 32, Permanent International Association of Navigation Congresses, Brussels, Belgium.

Report of Working Group IV, International Commission for the Reception of Large Ships, Annex to Bulletin No. 35, Permanent International Association of Navigation Congresses, Brussels, Belgium.

Research Investigation for the Improvement of Ship Mooring Methods, British Ship Research Association, Wallsend, Northcumberland, England.

Ships Motions in Shallow Water, Tuck, E. O., Journal of Ship Research, Vol. 14, No. 4.

Theory of Seakeeping, Korvin-Kroukovsky, B. V., Society of Naval Architects and Marine Engineers, New York, NY.

The Speed and Power of Ships, Taylor, D. W., U. S. Government Printing Office, Washington, D.C.

Wind Effects on Structures, An Introduction to Wind Engineering, Simiu, E. and Scanlan, R. H., John Wiley and Sons, New York, NY.