INCH-POUND

MIL-HDBK-1022A
01 NOVEMBER 1999
SUPERSEDING
MIL-HDBK-1022
30 JUNE 1997

DEPARTMENT OF DEFENSE
HANDBOOK

PETROLEUM FUEL FACILITIES

THIS HANDBOOK IS FOR GUIDANCE ONLY. DO NOT CITE THIS DOCUMENT AS A REQUIREMENT.

AMSC N/A AREA FACR

DISTRIBUTION STATEMENT A. APPROVED FOR PUBLIC RELEASE. DISTRIBUTION IS UNLIMITED.

ABSTRACT

Basic guidance is provided to professional facility planners, engineers, and architects for use in designing liquid fueling and dispensing facilities, liquefied petroleum gas facilities, and compressed natural gas facilities. Included are basic requirements for the design of fueling systems; the design of receiving, dispensing, and storage facilities; ballast treatment and sludge removal; corrosion and fire protection; and environmental requirements. It will serve as guidance for individual project planning and for preparing engineering and construction documentation.

FOREWORD

This handbook was developed to provide guidance on the planning, engineering, and design of liquid fueling and dispensing facilities; liquefied petroleum gas facilities; and compressed natural gas facilities. Unless otherwise noted, this handbook uses national professional society, association, and institute standards in accordance with the appropriate service policy. Do not deviate from this handbook without prior approval of Service Headquarters.

Recommendations for improvements are encouraged and should be furnished on the DD Form 1426 provided inside the back cover and forwarded to: Commanding Officer, Southern Division, Naval Facilities Engineering Command., Code 076(DPD), P.O. Box 190010, North Charleston, SC 29419-9010; telephone commercial (803) 820-7458, facsimile machine (803) 820-7304.

DO NOT USE THIS HANDBOOK AS A REFERENCE IN A PROCUREMENT DOCUMENT FOR FACILITIES CONSTRUCTION. IT IS TO BE USED IN THE PURCHASE AND PREPARATION OF FACILITIES PLANNING AND ENGINEERING STUDIES AND DESIGN DOCUMENTS USED FOR THE PROCUREMENT OF FACILITIES CONSTRUCTION (SCOPE, BASIS OF DESIGN, TECHNICAL REQUIREMENTS, PLANS, SPECIFICATIONS, COST ESTIMATES, REQUEST FOR PROPOSALS, AND INVITATION FOR BIDS). DO NOT REFERENCE IT IN MILITARY OR FEDERAL SPECIFICATIONS OR OTHER PROCUREMENT DOCUMENTS.

PETROLEUM FUEL FACILITIES

CONTENTS

Page

SECTION 1 INTRODUCTION 1

SECTION 2 GENERAL DESIGN INFORMATION 4

SECTION 3 BULK FUEL STORAGE FACILITIES 32

SECTION 4 AIRCRAFT FUELING FACILITIES 53

SECTION 5 MARINE RECEIVING AND DISPENSING FACILITIES 79

SECTION 6 INTERTERMINAL AND INSTALLATION PIPELINES 90

SECTION 7 GROUND VEHICLE FUELING FACILITIES 96

SECTION 8 ATMOSPHERIC STORAGE TANKS 99

SECTION 9 PIPING SYSTEMS 122

SECTION 10 ALTERNATE POL FACILITIES 135

SECTION 11 SUPPORT FACILITIES 153

SECTION 12 MAJOR REHABILITATION 159

SECTION 13 FUELING FACILITY TEMPORARY DEACTIVATION 169

SECTION 14 FUELING FACILITY CLOSURE 174

Note: The following figure presents general facilities that may be associated with a petroleum fuel system and where, within this handbook, these facilities are addressed.

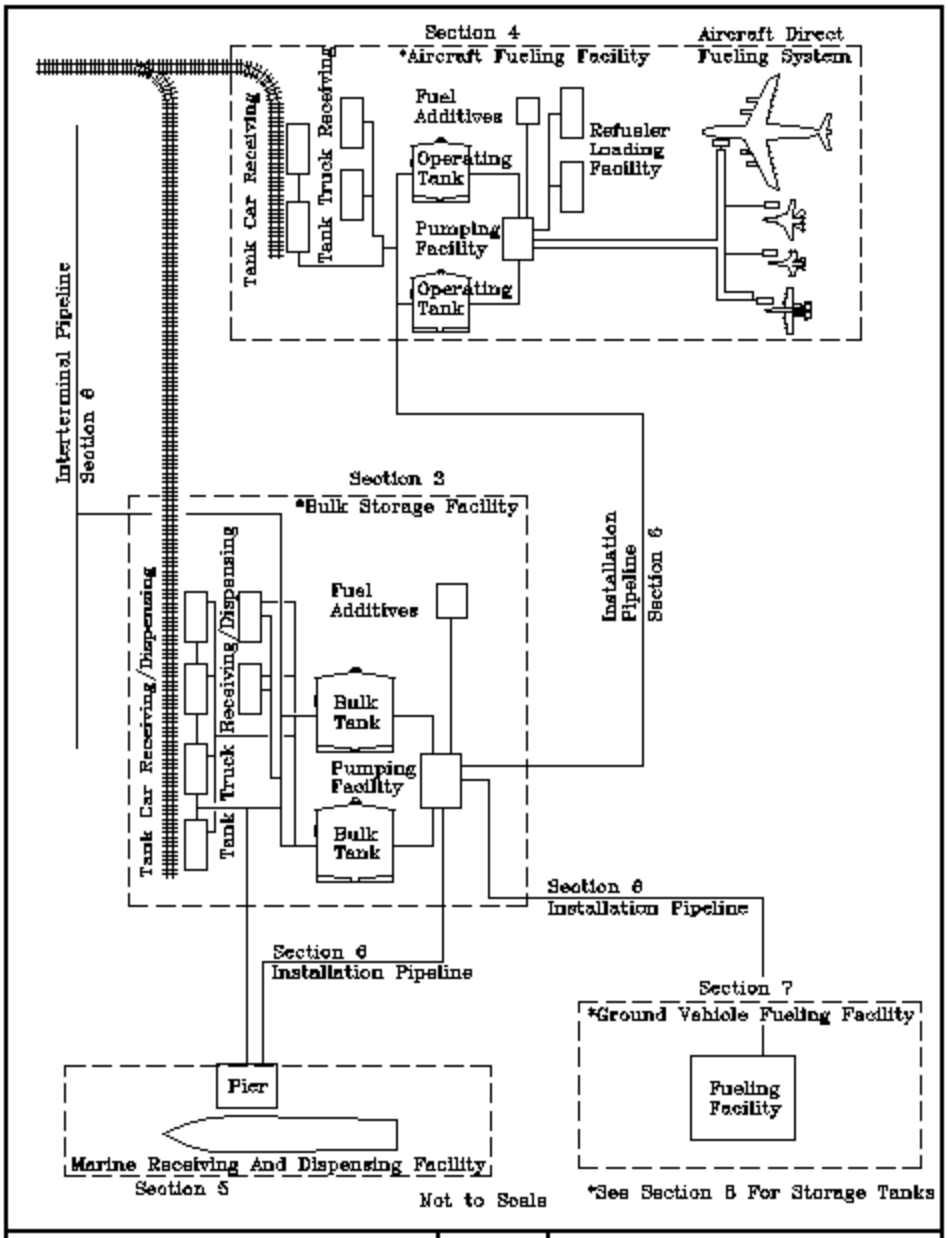
Section 4
*Aircraft Fueling Facility
Aircraft Direct Fueling System
Tank Car Receiving
Tank Truck Receiving
Fuel Additives
Operating Tank
Refueler Loading Facility
Pumping Facility
Operating Tank
Interterminal Pipeline
Section 6
Section 3
*Bulk Storage Facility
Installation Pipeline Section 6
Tank Car Receiving/Dispensing
Tank Truck Receiving/Dispensing
Fuel Additives
Bulk Tank
Pumping Facility
Bulk Tank
Section 6
Installation Pipeline
Section 6
Installation Pipeline
Section 7
*Ground Vehicle Fueling Facility
Fueling Facility
Pier
Marine Receiving And Dispensing Facility
Section 5
Not to Scale
*See Section 8 For Storage Tanks
TITLE
Handbook Section Identification Plan
DATE
06/97
FIGURE 1

(THIS PAGE INTENTIONALLY LEFT BLANK)

CONTENTS

		Page
SECTION 1	**INTRODUCTION**	
1.1	Scope	1
1.2	Use of Handbook	1
1.3	Purpose of Criteria	1
1.4	Cancellation	1
1.5	Department of Defense (DOD) Fuels Facility Engineering Panel	1
1.6	Approvals	2
1.7	Waivers	2
1.8	Related Criteria	2
1.9	Policy	2
1.10	Projects Outside of Continental United States	3
1.10.1	NATO Standards	3
1.10.2	Non-NATO Projects	3
1.11	Referenced Standards	3
SECTION 2	**GENERAL DESIGN INFORMATION**	
2.1	Operational Capabilities	4
2.2	Fuel Specifications	4
2.3	Fuel Properties and Additives	4
2.3.1	Motor Gasoline (Mogas) [F-46] [ASTM D4814]	5
2.3.1.1	Special Precautions for Mogas	5
2.3.2	Aviation Turbine Fuels	5
2.3.2.1	Physical Properties of Aviation Turbine Fuels	5
2.3.2.2	Special Precautions for Aviation Turbine Fuels	7
2.3.3	Kerosene [ASTM D3699]	7
2.3.3.1	Physical Properties of Kerosene	7
2.3.3.2	Special Precautions for Kerosene	8
2.3.4	Diesel Fuels	8
2.3.4.1	Physical Properties of Diesel Fuels	8
2.3.4.2	Special Precautions for Diesel Fuels	9
2.3.5	Burner Fuel Oils	9
2.3.5.1	Physical Properties of Burner Fuel Oils	9
2.3.5.2	Special Precautions for Burner Fuel Oils	9

Page
2.3.6 Liquefied Petroleum Gas (LPG) 10
2.3.6.1 Physical Properties of LPG 10
2.3.6.2 Special Precautions for LPG 10
2.3.7 Compressed Natural Gas (CNG) 10
2.3.7.1 Physical Properties of CNG 10
2.3.7.2 Special Precautions for CNG 11
2.3.8 OTTO Fuels 12
2.3.9 Fuel Additives 12
2.3.9.1 Fuel System Icing Inhibitor (FSII), High Flash, [MIL-DTL-85470] (diethylene glycol monomethyl ether (DIEGME)) 12
2.3.9.2 Corrosion Inhibitor/Lubricity Improver (CI), [MIL-DTL-25017] 13
2.3.9.3 Static Dissipater Additive 13
2.3.10 Lubricating Oils 13
2.3.10.1 Steam Turbine Lubricating Oils [0-250] [MIL-PRF-17331] 14
2.3.10.2 Lubricating Oils [0-278], [MIL-PRF-9000] .. 14
2.3.10.3 Special Precautions for Lubricating Oils .. 14
2.3.11 Hydrazine - Water (H-70) [MIL-PRF-26536] .. 14
2.3.11.1 Physical Properties of H-70 14
2.3.11.2 Special Precautions for H-70 14
2.4 Product Segregation 15
2.4.1 Product Grades 15
2.4.2 Exceptions 15
2.5 Transfer Flow Rates 15
2.6 Protection Against Damage 15
2.6.1 Degree of Protection 16
2.6.2 Design Criteria 16
2.7 Communications 16
2.8 Vapor Recovery 16
2.9 Worker Safety 16
2.10 Electrical Design 16
2.10.1 Area Classifications 16
2.10.1.1 Class I, Division 1 17
2.10.1.2 Class I, Division 2 17
2.10.1.3 Non-Classified Locations 20
2.10.2 Illumination 21
2.10.3 Grounding and Bonding 21

Page
2.10.3.1 Grounding Requirements 21
2.10.3.2 Current and Lightning Protection.. 22
2.10.3.3 Static Electricity Prevention 22
2.10.3.4 Installation 22
2.11 Security 23
2.12 Cathodic Protection 23
2.12.1 Tanks 23
2.12.2 Piping 23
2.12.3 Structures 24
2.13 Environmental Protection 24
2.13.1 General Policy 24
2.13.2 Regulations 24
2.13.2.1 Within U.S.A 24
2.13.2.2 Outside U.S.A 25
2.13.3 Transfer of Fuel at Ports 25
2.13.3.1 Bulk Transfer 25
2.13.3.2 Vapor Collection 25
2.13.4 Air Quality Control 26
2.13.4.1 Design Requirements 26
2.13.4.2 Aboveground Storage Tanks 26
2.13.4.3 Truck and Rail Loading Facilities 27
2.13.4.4 Permit Requirements 27
2.13.5 Water Quality Control 27
2.13.5.1 Design Requirements 28
2.13.5.2 Spill Prevention 28
2.13.5.3 Leak Detection 28
2.13.5.4 Stormwater Discharge 28
2.13.5.5 Oil/Water Separators 29
2.13.5.6 Dewatering 30
2.13.5.7 Wastewater Disposal 30
2.13.6 Underground Storage Tanks 30
2.13.6.1 Design Requirements 30
2.13.6.2 Other Criteria 31
2.14 Fire Protection 31
2.14.1 General Requirements 31
2.14.2 Protection of Aboveground Storage Tanks ... 31
2.14.2.1 Fire Protection Water Systems 31
2.14.2.2 Fire Protection Foam Systems 31
2.14.3 Protection of Tank Truck and Tank Car Facilities 31
2.14.4 Protection of Aircraft Fueling Facilities . 32
2.14.5 Protection of Support Facilities 32

Page

2.14.6 Protection of Fuel Piers 32
2.14.6.1 Fire Protection Water Systems 32
2.15 Electromagnetic Radiation Hazards 32
2.16 Identification 33
2.17 Antistatic Design 33
2.17.1 Piping Inlet Connections 34
2.17.2 Enclosed Vapor Spaces 34
2.17.3 Filter/Separators and Fuel Quality Monitors 34
2.17.4 Aircraft Direct Fueling Stations 34
2.17.5 Truck Bottom Loading 35
2.18 Operation and Maintenance Documentation ... 35
2.18.1 Equipment Operation and Maintenance Documentation 35
2.18.2 Operation and Maintenance Support Information (OMSI) 35
2.19 Protection Against Seismic Activity 35
2.20 Structural Design 35
2.21 Airfield/Airspace Requirements 35
2.22 Permits 36

SECTION 3 BULK FUEL STORAGE FACILITIES

3.1 Introduction 37
3.2 General Requirements 37
3.3 Receiving Facilities 37
3.3.1 Pipeline Receiving Facilities 37
3.3.1.1 General Criteria 38
3.3.1.2 Equipment Required 38
3.3.2 Tank Truck and Tank Car Off-loading Facilities 39
3.3.2.1 General Criteria 39
3.3.2.2 Off-loading Drop Tanks 42
3.3.2.3 Equipment Required 42
3.4 Dispensing Facilities 44
3.4.1 Pipeline Pumping Facilities 44
3.4.1.1 General Criteria 44
3.4.1.2 Equipment Required 44
3.4.2 Tank Truck and Tank Car Loading Facilities 45
3.4.2.1 General Criteria 45
3.4.2.2 Tank Truck Fillstand Equipment Required ... 47

Page

3.4.2.3 Tank Car Loading Station Equipment Required 49
3.5 Piping Systems 50
3.6 Equipment Descriptions 50
3.6.1 Bulk Air Eliminators 51
3.6.2 Meters - Positive Displacement 51
3.6.3 Meters - Turbine 51
3.6.4 Meters - Orifice 51
3.6.5 Pressure or Pressure/Vacuum Gauges 51
3.6.6 Strainers 52
3.6.7 Surge Suppressors 53
3.6.8 Pumps 53
3.6.8.1 Design Requirements 53
3.6.8.2 Centrifugal Pumps 53
3.6.8.3 Vertical Turbine Pumps 53
3.6.8.4 Rotary Pumps 54
3.6.8.5 Drivers 54
3.6.8.6 Materials of Construction 54
3.6.8.7 Installation 54
3.6.9 Valves 54
3.6.9.1 Materials of Construction - General 54
3.6.9.2 Special Consideration for Aviation Turbine Fuels 54
3.6.9.3 Types 55
3.6.9.4 Valve Operators 56
3.6.9.5 Locations 56
3.6.9.6 Valve Pits 57
3.6.10 Hydraulically Operated Diaphragm Control Valves 57
3.6.10.1 Open/Close Operation 58
3.6.10.2 Throttling 58
3.6.10.3 Check Valve Function 58
3.6.10.4 Two-Stage Flow Control Valves 58
3.6.10.5 Remote Operations 59
3.6.10.6 Materials of Construction 59
3.6.10.7 Applications 59
3.6.10.8 Combinations 60
3.6.11 Thermometers 60
3.6.12 Fuel Hoses 60
3.7 Controls 60
3.7.1 Design Requirements 60
3.7.2 Flow Controls 60

Page
3.7.3 Pump Controls 61
3.7.3.1 All Pumps 61
3.7.3.2 Transfer Pumps 61
3.7.3.3 Pipeline Pumps 62
3.7.4 Temperature Controls 62
3.7.5 Card and Key Locks 63
3.8 Fuel Additives 63

SECTION 4 AIRCRAFT FUELING FACILITIES
4.1 Introduction 64
4.1.1 Special Considerations 64
4.1.2 Function 64
4.1.3 Aviation Turbine Fuels 64
4.1.4 Special Precautions for Aviation Turbine Fuel Quality 65
4.2 General Requirements 65
4.3 Receiving Facilities 65
4.3.1 Pipeline Receiving Facilities 65
4.3.1.1 General Criteria 65
4.3.1.2 Equipment Required 65
4.3.1.3 Special In-Bound Filtration 67
4.3.2 Tank Truck and Tank Car Off-loading Facilities 67
4.3.2.1 General Criteria 68
4.3.2.2 Off-loading Drop Tanks 70
4.3.2.3 Equipment Required 70
4.4 Dispensing Facilities 71
4.4.1 Refueler Truck Fill Stands 71
4.4.1.1 General Criteria 71
4.4.1.2 Equipment Required 73
4.4.2 Aircraft Direct Fueling Systems 76
4.4.2.1 General Requirements 77
4.4.2.2 Fixed-Wing Small-Frame Aircraft 77
4.4.2.3 Large-Frame Aircraft 79
4.4.2.4 Helicopters 81
4.4.2.5 Surface-Effect Hovercraft 82
4.5 Ready-Issue (Operating Storage) Tanks 82
4.6 Piping Systems 82
4.7 Equipment Descriptions 82
4.7.1 Fuel Hoses 82
4.7.2 Meters 82
4.7.2.1 Positive Displacement 82

Page
4.7.2.2 Turbine 83
4.7.3 Pressure Gauges 83
4.7.4 Strainers 84
4.7.5 Surge Suppressors 85
4.7.6 Filter/Separators 85
4.7.6.1 Design Requirements 86
4.7.6.2 Arrangement 87
4.7.7 Fuel Quality Monitors 88
4.7.8 Pumps 88
4.7.8.1 Design Requirements 88
4.7.8.2 Centrifugal Pumps 88
4.7.8.3 Vertical Turbine Pumps 89
4.7.8.4 Rotary Pumps 89
4.7.8.5 Drivers 89
4.7.8.6 Materials of Construction 89
4.7.8.7 Installation 89
4.7.9 Valves 89
4.7.9.1 Materials of Construction 89
4.7.9.2 Types 90
4.7.9.3 Valve Operators 91
4.7.9.4 Locations 91
4.7.9.5 Valve Pits 92
4.7.10 Hydraulically Operated Diaphragm Control Valves 92
4.7.10.1 Open/Close Operation 93
4.7.10.2 Throttling 93
4.7.10.3 Check Valve Function 93
4.7.10.4 Remote Operations 93
4.7.10.5 Materials of Construction 93
4.7.10.6 Applications 94
4.7.10.7 Combinations 94
4.8 Controls 94
4.8.1 Design Requirements 94
4.8.2 Flow Controls 94
4.8.3 Pump Controls 95
4.8.3.1 Transfer Pumps 95
4.8.3.2 All Pumps 95
4.8.3.3 Pipeline Pumps 96
4.9 Fuel Additives 96
4.9.1 Plus 100 Additive 97
4.10 Defueling Systems 97

Page

SECTION 5 MARINE RECEIVING AND DISPENSING FACILITIES

5.1 Function 98
5.2 Fuel Piers and Wharves 98
5.3 Berthing Piers 98
5.4 Offshore Moorings 98
5.5 General Requirements 99
5.6 General Layout 99
5.7 Piping Systems 100
5.7.1 Piping Arrangement 100
5.8 Equipment Descriptions 100
5.8.1 Loading/Off-loading Arms 100
5.8.2 Fuel Hoses 101
5.8.3 Submarine Fuel Hoses 101
5.8.4 Meters 101
5.8.4.1 Positive Displacement 101
5.8.4.2 Turbine 102
5.8.5 Strainers 102
5.8.6 Surge Suppressors 103
5.8.7 Valves 103
5.8.7.1 Materials of Construction 103
5.8.7.2 Types and Locations 103
5.8.8 Pressure or Pressure/Vacuum Gauges 104
5.8.9 Stripper Pumps 105
5.8.10 Excess Flow Sensors 105
5.8.11 Solid Cyclonic Separators 105
5.8.12 Clay Filters 106
5.8.13 Special Considerations for Aviation Turbine Fuels 106
5.9 Weather Sheds 106
5.10 Safety Showers and Eye-Wash Fountains 106
5.11 Traffic Bollards 106
5.12 Special Drainage for Fueling Piers 106
5.13 Ballast Treatment and Sludge Removal 107
5.13.1 Ballast Receiving and Treatment Facilities 107
5.13.1.1 Design Requirements 107
5.13.1.2 Receiving and Settling Tanks 108
5.13.1.3 Oil/Water Separators 109
5.14 Sludge Removal Systems 109
5.14.1 Design Requirements 110
5.14.2 Sludge Disposal 110
5.14.3 Piping Materials 110

Page

SECTION 6 INTERTERMINAL AND INSTALLATION PIPELINES

6.1 Introduction 111
6.2 General Requirements 111
6.3 Design Requirements 111
6.3.1 Fuel Segregation 111
6.3.2 Interterminal Regulations 111
6.3.3 Sampling 111
6.4 Piping Systems 111
6.4.1 Interstate Requirements 112
6.5 Equipment 112
6.5.1 Meters 112
6.5.1.1 Positive Displacement 112
6.5.1.2 Turbine 112
6.5.2 Manual Valves 112
6.5.2.1 Locations 113
6.5.2.2 Materials of Construction 114
6.5.2.3 Types 114
6.5.2.4 Valve Operators 114
6.5.3 Hydraulically Operated Diaphragm Control Valves 115
6.5.3.1 Open/Close Operation 115
6.5.3.2 Throttling 115
6.5.3.3 Check Valve Function 115
6.5.3.4 Remote Operation 116
6.5.3.5 Materials of Construction 116
6.5.3.6 Applications 116
6.5.3.7 Combinations 116
6.5.4 Surge Suppressors 116
6.5.5 Pigging Equipment 117
6.5.6 Pumps 117
6.5.7 Sampling Connections 117
6.6 Special Calculations 117

SECTION 7 GROUND VEHICLE FUELING FACILITIES

7.1 Introduction 118
7.1.1 Types of Facilities 118
7.2 General Requirements 118
7.3 Design Requirements 118
7.3.1 Fuel Segregation 118
7.3.2 Facility Size 118
7.3.3 Facility Configurations 119
7.3.4 Shelters 119

Page
7.3.5 Regulations 119
7.3.6 Bottom Loading 119
7.4 Storage Tanks 119
7.5 Piping Systems 119
7.6 Equipment Descriptions 119
7.6.1 Consumptive Use Filling Stations 119
7.6.1.1 Fuel Dispensers 119
7.6.1.2 Card and Key Locks 120
7.6.2 Tactical Refueler Fill Stands 120
7.7 Drainage 120
7.8 Vapor Recovery 120

SECTION 8 ATMOSPHERIC STORAGE TANKS
8.1 Introduction 122
8.2 General Requirements 122
8.3 General Criteria 122
8.3.1 Protection 122
8.3.2 Design Requirements 122
8.3.3 Storage Capacity 123
8.3.4 Tank Spacing 123
8.3.4.1 Vertical Tanks 123
8.3.4.2 Horizontal Tanks 123
8.3.4.3 Aboveground Concrete-Encased Tanks 124
8.3.5 Distance From Buildings and Property Lines 124
8.3.5.1 Underground Tanks 124
8.3.5.2 Aboveground Tanks 124
8.3.6 Distance From Roadway, Railroads, and Power Lines 125
8.3.6.1 Underground Tanks 125
8.3.6.2 Aboveground Tanks 125
8.3.7 Interior Coatings 126
8.3.8 Exterior Coatings 126
8.3.9 Fill Piping 127
8.3.10 Vapor Emission Control Systems 127
8.3.11 Strapping Tables 127
8.3.12 Product Recovery Systems 127
8.3.13 Registration 128
8.4 Aboveground Horizontal Storage Tanks 128
8.4.1 General Design Considerations 128
8.4.2 Installation 128

Page
8.7 Underground Horizontal Storage Tanks 134
8.7.1 General Design Considerations 134
8.7.2 Installation 135
8.8 Underground Vertical Storage Tanks 135
8.8.1 General Design Considerations 135
8.9 Appurtenances 136
8.10 Heaters 136
8.10.1 General Design Considerations 136
8.10.2 Heating Medium 137
8.10.3 Convection-Type 137
8.10.4 In-Line Type 137
8.10.5 Insulation and Tracing 138
8.11 Tank Enclosures 138
8.11.1 General Design Considerations 138
8.11.2 Capacity 138
8.11.3 Earthen Dikes 139
8.11.4 Reinforced Concrete Dikes 147
8.11.5 Combination Dikes 147
8.11.6 Remote Containment/Impoundment Spill Collection Systems 147
8.11.7 Stormwater Collection Systems 148
8.11.8 Dike Access 149
8.12 Miscellaneous Use Tanks 149
8.12.1 Installation 149
8.12.2 Heating Oil Tanks 149
8.12.3 Emergency Generator Fuel Tanks 149
8.12.4 Fire Pump Fuel Tanks 149
8.12.5 Waste Oil Tanks 150
8.12.6 Containment 150
8.12.7 Underground Tanks 150
8.13 Shipboard Off-load Fuel Storage Tanks 150
8.13.1 Function 150
8.13.2 General Design Considerations 150
8.13.3 Locations 150
8.14 Jet Engine Test Cell Fuel Storage Tanks .. 150
8.15 Fuels Automated System 150

SECTION 9 PIPING SYSTEMS
9.1 Introduction 152
9.1.1 Design Requirements 152
9.1.1.1 Hydraulic Design 153
9.1.2 Piping Arrangement 154

9.1.3 Surge Analysis 155
9.2 Aboveground Piping 159
9.2.1 Identification 159
9.2.2 Pipe Supports 159
9.2.3 Arrangement 159
9.2.4 Anchors 160
9.2.5 Relief Valves 160
9.3 Underground Piping 161
9.3.1 Depth of Cover 161
9.3.2 Parallel Pipes 162
9.3.3 Casing Sleeves 162
9.3.4 Line Markers 162
9.3.5 Warning Tapes 163
9.3.6 Double-Wall Piping 163
9.3.7 Single-Wall Piping 163
9.4 Underwater Piping 163
9.4.1 Special Arrangements 163
9.4.2 Connections 163
9.4.3 Unique Considerations 164
9.4.4 Corrosion Protection 164
9.4.5 Depth of Burial 164
9.4.6 Pipe Thickness and Weight 164
9.5 Piping Materials 165
9.5.1 Non-Aviation Systems 165
9.5.2 Aviation Systems 165
9.6 Welding Criteria 165
9.7 Piping Connections 165
9.8 Interior Pipe Coatings 167
9.9 Exterior Pipe Coatings 167
9.10 Sampling Facilities 167

SECTION 10 ALTERNATE POL FACILITIES
10.1 Introduction 168
10.2 Liquefied Petroleum Gas (LPG) 168
10.2.1 Uses 168
10.2.2 General Design Considerations 169
10.2.2.1 Fire Hazards 169
10.2.2.2 Refrigerating Effects 170
10.2.2.3 Design Standards 170
10.2.3 Receiving Facilities 171
10.2.3.1 General Design Considerations 171
10.2.3.2 Transfer Methods 171
10.2.3.3 Flow Rates 172

Page
10.2.4 Storage Facilities 172
10.2.4.1 Types of Storage 173
10.2.4.2 Number and Size of Bulk Tanks 173
10.2.4.3 Design Requirements 174
10.2.4.4 Inspection, Testing, and Certifications .. 174
10.2.5 Distribution Facilities 174
10.2.5.1 General Design Considerations 175
10.2.5.2 Piping Materials 175
10.2.5.3 Accessories 176
10.2.5.4 Pumps and Compressors 176
10.2.5.5 Vaporizers 177
10.2.5.6 Controls 177
10.2.6 Air Mixing Facilities 177
10.2.6.1 Pressure Controls 177
10.2.6.2 Volumetric Controls 178
10.2.6.3 Specific Gravity Indication 178
10.2.6.4 Calorimetric Controls 178
10.3 Compressed Natural Gas (CNG) 178
10.3.1 Uses 178
10.3.2 General Design Considerations 178
10.3.2.1 System Sizing 178
10.3.2.2 Future Requirements 179
10.3.2.3 Pressures 179
10.3.2.4 Connections 179
10.3.2.5 Compressors 179
10.3.2.6 Compressor Drives 180
10.3.2.7 Compressor Inlet Pressure 180
10.3.2.8 Storage 180
10.3.2.9 Controls 180
10.3.2.10 Dispensers 180
10.3.2.11 Nozzles 181
10.3.2.12 Environmental Considerations 181
10.3.2.13 Weather 181
10.3.2.14 Coatings 182
10.3.2.15 Water Content 182
10.3.2.16 Design Standards 182
10.3.3 Warning 182
10.4 Hydrazine Storage and Servicing Facilities 182
10.4.1 Uses 182
10.4.2 General Design Considerations 183
10.4.3 Construction Concepts 183

Page
10.4.3.1 Access 183
10.4.3.2 Architectural 184
10.4.3.3 Fire Protection Systems 184
10.4.3.4 Spill Containment 184
10.4.3.5 Floor Drains 185
10.4.3.6 Collection Tank and Piping 186
10.4.3.7 Grounding 186
10.4.3.8 Hygiene Support Criteria 186
10.4.3.9 Lighting 187
10.4.3.10 Safety 187
10.4.3.11 Utilities 187
10.4.3.12 Ventilation 188
10.4.3.13 Waste Product Disposal 189
10.5 OTTO Fuels 189

SECTION 11 SUPPORT FACILITIES
11.1 Introduction 190
11.2 Operations Building 190
11.2.1 Design Standards 190
11.2.2 Fuel Office 190
11.2.3 Training/Conference Room 190
11.2.4 Fuel Workshop 190
11.2.5 Storeroom 191
11.2.6 Laboratory 191
11.2.7 Miscellaneous Safety Equipment 192
11.2.8 Control Room 192
11.2.9 Miscellaneous Spaces 193
11.2.10 Communications 193
11.3 Roads 193
11.4 Utilities 193
11.5 Aircraft Refueler Parking 193
11.5.1 General 193
11.5.2 Clearances 193
11.5.3 Arrangement 195
11.5.4 Ingress/Egress 195
11.5.5 Paving 195
11.5.6 Drainage 195
11.5.7 Fire Protection 196
11.5.8 Security 196
11.5.9 Lighting 196
11.5.10 Block Heater Connections 196

Page

SECTION 12 MAJOR REHABILITATION

12.1 Introduction 197
12.2 General Requirements 197
12.3 Aboveground Fuel Storage Tank Rehabilitation 197
12.3.1 Increase Manhole Sizes 198
12.3.2 Replace Tank Floors 198
12.3.2.1 Double Bottom With Washed Sand Layer and Liner 198
12.3.2.2 Double Bottom With Concrete Layer and New Steel Bottom 199
12.3.2.3 Double Steel Bottom 199
12.3.2.4 Single Bottom With Liner 199
12.3.3 Aboveground Vertical Tank Inspections ... 200
12.3.4 Replace Floating Roof Tanks With Fixed Roofs 200
12.3.5 Product Recovery Systems 200
12.3.6 Coatings 201
12.3.7 Isolation Valves 201
12.3.8 Alarms and High Level Shut-off Valves ... 201
12.4 Underground Operating Tanks 201
12.4.1 Manholes 201
12.4.2 Interior Coatings 202
12.5 Hydrant Systems 202
12.5.1 Pumps 202
12.5.2 Filters/Separators 202
12.5.3 Control Systems 203
12.5.4 Electrical Systems 203
12.5.5 Lateral Control Pits 203
12.5.6 Distribution Piping 204
12.5.7 Control Valves 204
12.5.8 Hydrant Outlets 204
12.6 Dikes, Liners, and Basins 204
12.7 Leak Detection 205
12.8 Cathodic Protection 205
12.9 Isolation Valves 205
12.10 Soil and Groundwater Remediation 205
12.11 Liquefied Petroleum Gas (LPG) Facilities 206
12.12 Pipeline Inspection 206
12.12.1 Inspection 206
12.12.2 Smart Pigging 206
12.12.2.1 General 206

Page
12.12.2.2 Types 206
12.13 Checklist 206

SECTION 13 FUELING FACILITY TEMPORARY DEACTIVATION
13.1 Introduction 210
13.2 General Requirements 210
13.3 Fuel Storage and Distribution Facilities 210
13.3.1 Tanks 210
13.3.1.1 Aboveground Tanks 211
13.3.1.2 Underground Tanks 211
13.3.1.3 Tank Level Controls 212
13.3.2 Pipelines 212
13.3.2.1 Pipeline Equipment 213
13.3.2.2 Fueling Pits 213
13.4 Facilities 213
13.4.1 General Considerations 213
13.4.2 Fencing 214
13.4.3 Paved Surfaces 214

SECTION 14 FUELING FACILITY CLOSURE
14.1 Closure Requirements 216
14.1.1 Aboveground Tanks 216
14.1.2 Underground Tanks 216
14.1.3 Pipelines 217
14.2 General Requirements 217
14.3 Inventory 217

FACILITY PLATES

Plate No.	Title	Page
001	Handbook Section Identification Plan	220
002	Tank Truck and Car Facilities Tank Truck Layout Plan	221
003	Tank Truck and Car Facilities Tank Truck Equipment Plan	222
004	Tank Truck and Car Facilities Tank Car Layout and Equipment Plan	223
005	Tank Truck and Car Facilities Air Elimination Drop Tank	224
006	Refueler Truck Facilities Layout Plan	225
007	Refueler Truck Facilities Equipment Plan	226
008	Aircraft Direct Fueling Systems Large Frame Aircraft On-Apron Fueling Positions	227
009	Aircraft Direct Fueling Systems Small Frame Aircraft Fueling Lane and Apron Edge	228
010	Aircraft Direct Fueling Systems Small Frame Aircraft In-Shelter Fueling Positions	229
011	Ground Vehicle Fueling Facilities GOV Fueling Station Plan	230
012	Ground Vehicle Fueling Facilities Tactical Refueler Fill Stand Plan	231
013	Ground Vehicle Fueling Facilities Tactical Refueler Equipment Plan	232
014	Aboveground Vertical Storage Tanks Tank Foundation Section	233
015	Aboveground Vertical Storage Tanks Center Sump Layout	234
016	Aboveground Vertical Storage Tanks Inlet Fill Connection	235
017	Aboveground Vertical Storage Tanks Pump Suction and Water Drawoff Connections	236
018	Horizontal Underground Storage Tanks Inlet Fill Connection	237
019	Horizontal Aboveground Storage Tanks Inlet Fill Connection	238
020	Earthen Dikes	239
021	Piping Systems Sliding Pipe Support	240
022	Piping Systems Sliding Pipe Support	241
023	Piping Systems Anchor Pipe Support	242
024	Piping Systems Anchor Pipe Support	243

Plate No.	Title	Page
025	Aviation System Filtration Location and Piping Materials	244
026	Thermal Relief Piping Systems Integral Valve and Conventional	245
027	Thermal Relief Piping Systems Equipment Pumphouse or Pads	246
028	Thermal Relief Piping Systems Tank Truck and Refueler Racks	247
029	Thermal Relief Piping Systems Storage Tanks	248
030	Liquefied Petroleum Gas Facilities Small Volume Facility for Trucks and Cylinders	249
031	Liquefied Petroleum Gas Facilities Large Volume Facility for Tank Cars and Water Vessels	250
032	Liquefied Petroleum Gas Facilities Tank Spacing Requirements	251
033	Liquefied Petroleum Gas Facilities Tank Spacing Requirements	252

TABLES

Table 1 Design Flow Rates 19
2 Appurtenances 140

REFERENCES 253

GLOSSARY 269

Section 1: INTRODUCTION

1.1 SCOPE. This military handbook, MIL-HDBK-1022A, contains general criteria and standard procedures for the design and construction of military land-based facilities which receive, store, distribute, or dispense liquid fuels. It is also applicable to the handling of liquefied petroleum gases (LPG) and compressed natural gas (CNG). It provides guidance on the rehabilitation, deactivation, or closure of fueling facilities. Support facilities are also included. Facility Plate No. 001 provides assistance in identifying handbook section numbers for specific fueling components.

1.2 USE OF HANDBOOK. The guidance contained in this handbook is intended for use by facility planners, engineers, and architects for individual project planning and for preparing engineering and construction documentation. In addition, it is intended for use by operations and maintenance personnel as a guidance document for facility design, modifications, and improvements.

1.3 PURPOSE OF CRITERIA. These criteria, except Sections 12, 13, and 14 of this handbook, are intended for new construction only and do not apply retroactively to facilities existing at the time this handbook was issued. However, these criteria, including Sections 12, 13, and 14, are applicable when modernizing or expanding existing facilities if the improvements can be justified in terms of obsolescence, expanded operational requirements, safety, environmental compliance, or excessive maintenance costs.

1.4 CANCELLATION. This handbook, MIL-HDBK-1022A, dated 01 November 1999, cancels and supersedes MIL-HDBK-1022 dated 30 June 1997.

1.5 DEPARTMENT OF DEFENSE (DOD) FUELS FACILITY ENGINEERING PANEL. This handbook establishes the DOD Fuels Facility Engineering Panel. This ad hoc group is to be an association of recognized petroleum, oils, and lubricants (POL) experts, primarily from the engineering community, to advise the Services on ways to provide safe, operationally effective, and economic fueling systems. The panel will investigate, develop, and recommend standardization of facilities, equipment, and procedures for storage, distribution, and dispensing systems for aircraft, marine, and

ground fuels. The panel will investigate the use of facility component parts on DOD installations and will serve as a pool of expertise to assist in resolving systemic POL facility problems. It will also serve as a forum to update members on new equipment, DOD or service-specific programs, and changes affecting the fuels maintenance/repair community.

1.6 APPROVALS. It is recognized that the policies, obligations, and responsibilities of the military branches may vary on some minor points. Therefore, consult the appropriate Service Headquarters for interpretation.

The appropriate Service Headquarters are defined as follows:

a) Army - Headquarters Corps of Engineers - CEMP-ET

b) Air Force - The Air Force Fuels Engineer (HQ AFCESA/CESM) through the applicable Major Command (MAJCOM) Fuels Engineer

c) Navy/Marine Corps -Naval Facilities - NFESC 57 Applied Technology Division

d) Defense Energy Support Center (DESC) - DESC Facility Engineer

1.7 WAIVERS. For specific interpretations or waivers, contact the appropriate Service Headquarters. Substantive deviations from this handbook must be approved by the DOD Fuels Facility Engineering Panel, preferably in a normal meeting. Where time does not permit, approval may be obtained by polling the voting members. The DOD Fuel Facility Engineering Panel consists of members from the above service headquarters/

1.8 RELATED CRITERIA. Other sources for criteria related to petroleum fuel facilities are identified in the References section at the end of this document. Any reference noted is the latest edition unless otherwise stated.

1.9 POLICY. Design petroleum fuel facilities to meet the operational and management requirements of the command in which the facility is located, as well as to meet all

applicable local, state, and federal regulations concerning environmental, health, safety, and fire protection issues.

1.10 PROJECTS OUTSIDE OF CONTINENTAL UNITED STATES

1.10.1 NATO Standards. For fueling projects outside of the continental United States (CONUS) and in a NATO (North Atlantic Treaty Organization) country, review and comply with all appropriate NATO documents.

1.10.2 Non-NATO Projects. For fueling projects located outside of the CONUS and not in a NATO country, use this handbook, applicable Service policy, and host-nation standards (if more stringent).

1.11 REFERENCED STANDARDS. The design agency issuing a contract for design services will provide direction for obtaining required Standard Design, guide specifications, and/or definitive drawings. In other situations where these standards are not readily available, contact appropriate Service Headquarters for assistance in obtaining these documents.

Section 2: GENERAL DESIGN INFORMATION

2.1 OPERATIONAL CAPABILITIES. Design fuel facilities for continued operation using emergency or temporary expedients despite the loss of one or more components of the fuel receiving and/or dispensing system by enemy action or other factors. For tactical or mission-related fuel facilities, provide an alternative source of fuel supply to the fuel facility to ensure emergency operation under the most adverse conditions, including back-up power (emergency generators). Maintain consistency with prescribed criteria in appropriate directives, instructions, and standard designs (including NATO Standards).

2.2 FUEL SPECIFICATIONS. The following specifications apply to the various petroleum fuels that may be addressed:

a) MIL-DTL-5624, Turbine Fuels, Aviation, Grades JP-4, JP-5, and JP-5/JP-8 ST.

b) MIL-DTL-38219, Turbine Fuel, Low Volatility, JP-7.

c) MIL-DTL-83133, Turbine Fuels, Aviation, Kerosene Types, NATO F-34 (JP-8), and NATO F-35.

d) MIL-DTL-25524, Turbine Fuel, Aviation, Thermally Stable (JPTS).

e) ASTM D1655, Aviation Turbine Fuels.

f) CID A-A-52557, Fuel Oil, Diesel for Posts, Camps and Stations.

g) MIL-F-16884, Fuel, Naval Distillate.

h) ASTM D3699, Kerosene.

i) ASTM D4814, Automotive Spark-Ignition Engine Fuel.

2.3 FUEL PROPERTIES AND ADDITIVES. In addition to the fuel specifications, refer to Coordinating Research Council , Inc. (CRC), Handbook of Aviation Fuel Properties, for additional fuel properties. The following paragraphs list

typical physical properties of various grades of fuel and additives which would affect the design of a petroleum fuel facility. The NATO designation is shown in brackets.

2.3.1 Motor Gasoline (Mogas) [F-46] [ASTM D4814]

2.3.1.1 Special Precautions for Mogas. Because of its high volatility, gasoline produces large amounts of vapor at ordinary temperatures. When confined in a tank or container at liquid temperatures above 20 degrees F (-7 degrees C), the vapor space is normally too rich to be explosive. At temperatures 20 degrees F (-7 degrees C) or less, vapor spaces above gasoline may be in the explosive range. One gallon (3.785 L) of liquid gasoline when vaporized will occupy about 25 cubic feet of space (0.7 m^3), and if permitted to escape and become diluted with air, it is highly flammable. Provide a design that precludes disposing of Mogas into storm or sanitary sewers.

2.3.2 Aviation Turbine Fuels

2.3.2.1 Physical Properties of Aviation Turbine Fuels

a) Relative Density (Specific Gravity)

JP-4 [F-40]	57 degrees to 45 degrees API (0.751 to 0.802)
JP-5 [F-44]	48 degrees to 36 degrees API (0.788 to 0.845)
JP-7	50.1 degrees to 44 degrees API (0.779 to 0.806)
JP-8 [F-34]	51 degrees to 37 degrees API (0.775 to 0.840)
JP-10	20 degrees to 18.5 degrees API (0.935 to 0.943)
JP-TS	53 degrees to 46 degrees API (0.767 to 0.797)
Jet A	51 degrees to 37 degrees API (0.775 to 0.840)
Jet A-1 [F-35]	51 degrees to 37 degrees API (0.775 to 0.840)
Hydrazine	9 degrees API (1.007)

b) True Vapor Pressure at 100 degrees F (38 degrees C), psia (kPa)

JP-4 [F-40]	2 to 3 (13.8 to 20.7)
JP-5 [F-44]	0.04 (0.3)
JP-7	< 0.1 (0.7)
JP-8 [F-34]	0.05 (0.3)
JP-10	0.11 (0.8)
JP-TS	0.11 (0.8)
Jet A	0.029 (0.2)
Jet A-1 [F-35]	0.05 (0.3)

c) Flash Point, degrees F (degrees C)

JP-4 [F-40]	-20 (-29)
JP-5 [F-44]	140 (60)
JP-7	140 (60)
JP-8 [F-34]	100 (38)
JP-10	67 (19)
JP-TS	110 (43)
Jet A	100 (38)
Jet A-1 [F-35]	100 (38)
Hydrazine	126 (52)

d) Viscosity (kinematic) at 60 degrees F (16 degrees C), ft^2/s (cSt)

JP-4 [F-40]	0.9×10^{-5} (0.8)
JP-5 [F-44]	1.6×10^{-5} (1.5)
JP-7	2.0×10^{-5} (1.9)
JP-8 [F-34]	1.9×10^{-5} (1.8)
JP-10	3.4×10^{-5} (3.2)
JP-TS	1.3×10^{-5} (1.2)
Jet A	1.6×10^{-5} (1.5)
Jet A-1 [F-35]	1.6×10^{-5} (1.5)

e) Freeze Point, degrees F (degrees C), maximum

JP-4 [F-40]	-72 (-58)
JP-5 [F-44]	-61 (-52)
JP-7	-46 (-43)
JP-8 [F-34]	-53 (-47)
JP-10	-110 (-79)

JP-TS	-64 (-53)
Jet A	-40 (-40)
Jet A-1 [F-35]	-53 (-47)

2.3.2.2 Special Precautions for Aviation Turbine Fuels. Because of the serious consequences of a turbine engine failure and the nature of the fuel systems in turbine engines, provide designs which include means to prevent contamination of aviation turbine fuels by dirt, water, or other types of fuels. Solid contaminants are generally those which are insoluble in fuel. Most common are iron rust, scale, sand, and dirt. Iron rust contaminates aviation turbine fuel, and carbon steel contact degrades thermal stability. Special filtration is required for receiving aviation turbine fuel into bulk storage and ready issue (operating storage) to remove contaminants before the fuel is delivered to aircraft. To preserve fuel quality, limit materials in contact with the fuel to stainless steel, non-ferrous, or coated carbon steel for aircraft fueling systems. Do not use zinc, copper, and zinc- or copper-bearing alloys in contact with aviation turbine fuels, including pipe, valves, equipment, and accessories. The maximum allowable aircraft servicing use limits of solids is 2.0 mg/L and the maximum allowable aircraft servicing use limits of free water is 5 ppm. Provide a design that precludes disposing of aviation turbine fuels into storm or sanitary sewers.

2.3.3 Kerosene [ASTM D3699]

2.3.3.1 Physical Properties of Kerosene

a) Relative Density
API Gravity 51 degrees to 37 degrees API
Specific Gravity 0.775 to 0.840

b) Reid Vapor Pressure 0.5 psia (3.5 kPa)
(maximum at 100 degrees F (38 degrees C))

c) Flash Point (minimum) 100 degrees F (38 degrees C)

d) Viscosity at 104 degrees F (40 degrees C) 1 to 2 x 10^{-5} ft^2/s (0.9 to 1.9 cSt)

e) Freezing Point -22 degrees F (-30 degrees C) (maximum)

2.3.3.2 Special Precautions for Kerosene. Design separate systems for kerosene to avoid discoloration caused by contamination. Provide a design that precludes disposing of kerosene into storm or sanitary sewers.

2.3.4 Diesel Fuels

2.3.4.1 Physical Properties of Diesel Fuels

	Automotive DF-2 [F-54]	Diesel Fuel Marine [F-76]
(a) Relative Density API Gravity, °API Specific Gravity	 40 to 34 0.825 to 0.855	 39 to 33 0.830 to 0.860
(b) Reid Vapor Pressure at 100 °F (38 °C), psia (kPa)	0 (0)	0 (0)
(c) Flash Point, °F (°C)	131 (55)	140 (60)
(d) Viscosity at 104 °F (40 °C) ft^2/s (cSt)	2 to 4.4 x 10^{-5} (1.9 to 4.1)	1.8 to 4.6 x 10^{-5} (1.7 to 4.3)
(e) Pour Point, °F (°C)	10 (-12)	20 (-7)

Notes: JP-8 is currently used as arctic grade diesel fuel (DFA) in the Arctic and Antarctic for heating fuel. The gross heating value of JP-8 is 18,400 Btu/lb (42 800 kJ/kg).

DF-1, winter grade diesel fuel, has a flash point of 100 degrees F (38 degrees C) and a viscosity of 1.4 to 2.6 x 10^{-5} ft^2/s (1.3 to 2.4 cSt) at 104 degrees F (40 degrees C).

2.3.4.2 Special Precautions for Diesel Fuels. While not as critical as with aviation turbine fuels, diesel fuel systems are subject to damage by dirt and water in the fuel. Avoid contamination by dirt and water or dilution by lighter fuels. In cold climates, provide designs that will prevent “gelling.” Provide a design that precludes disposing of diesel fuels into storm or sanitary sewers.

2.3.5 Burner Fuel Oils

2.3.5.1 Physical Properties of Burner Fuel Oils

	Grade Number					
	1	2	4	5 Light	5 Heavy	6
Relative Density °API	48 to 36	40 to 28	30 to 15	22 to 14	23 to 8	22 to 7
Specific Gravity	0.786 to 0.843	0.825 to 0.877	0.876 to 0.966	0.922 to 0.972	0.913 to 1.017	0.922 to 1.022
Reid Vapor Pressure at 100 °F (38 °C), psia (kPa)	< 0.1 (< 0.7)	< 0.1 (< 0.7)	< 0.1 (< 0.7)	< 0.1 (< 0.7)	< 0.1 (< 0.7)	< 0.1 (< 0.7)
Minimum Flash Point, °F (°C)	100 (38)	100 (38)	130 (54)	130 (54)	130 (54)	150 (66)
Average viscos-ity at 100 °F (38 °C), $ft^2/s \times 10^{-5}$ (cSt)	1.5 to 2.4 (1.4 to 2.2)	2 to 3.3 (1.9 to 3.1)	11.3 to 70 (10.5 to 65)	70 to 215 (65 to 200)	323 to 969 (300 to 900)	208 to 807 (193 to 750)
Pour Point, °F (°C)	-10 (-23)	-5 (-21)	21 (-6)	20 to 30 (-7 to -1)	20 to 30 (-7 to -1)	30 to 70 (-1 to 21)
Gross Heat Value, Btu/lb (kJ/kg)	19,765 (45 973)	19,460 (45 264)	18,840 (43 820)	18,560 (43 171)	18,825 (43 787)	18,200 (42 333)

2.3.5.2 Special Precautions for Burner Fuel Oils. When the ambient temperature of the burner fuel oil is less than 20 degrees F (11 degrees C) above the pour point temperature, the burner fuel oil needs to be heated. At the burner fuel

oil's pour point temperature, the fuel oil has reached a gel-like state and would be difficult to pump. In nearly all cases, No. 6 fuel oil requires heating to be pumped. In some cases, No. 4 and No. 5 burner fuel oils will require heating.

2.3.6 Liquefied Petroleum Gas (LPG)

2.3.6.1 Physical Properties of LPG. LPG is composed predominantly of propane and propylene with minor amounts of butane, isobutane, and butylene. It is odorless, colorless, and non-toxic. To reduce the danger of an explosion from undetected leaks, commercial LPG usually contains an odorizing agent which gives it a distinctive pungent odor. LPG is a vapor at atmospheric conditions. It is normally stored as a liquid at a storage pressure of 200 psia (1400 kPa). LPG has the following properties:

a) Freezing Point, degrees F (degrees C) -305 (-187)

b) Relative Density (Specific Gravity) 147 degrees API (0.588)

c) Vapor Pressure at 100 degrees F (38 degrees C), 175.8 (1212) psi (kPa)

d) Heat Content, Btu/lb (kJ/kg) 21,591 (50 221)

2.3.6.2 Special Precautions for LPG

a) Store LPG under pressure in appropriate pressure-rated tanks.

b) The potential for fire and explosion presents extreme hazards to life and property. Provide adequate relief venting and additional fire protection in accordance with NFPA 58.

c) Provide tank spacing in accordance with the requirements of Section 10 of this handbook.

2.3.7 Compressed Natural Gas (CNG)

2.3.7.1 Physical Properties of CNG. Appendix A to NFPA 52, Compressed Natural Gas (CNG) Vehicular Fuel Systems, defines certain CNG properties. Natural gas is a flammable gas. It

is colorless, tasteless, and non-toxic. It is a light gas, weighing about two thirds as much as air. It tends to rise and diffuse rapidly in air when it escapes from the system. Natural gas burns in air with a luminous flame. At atmospheric pressure, the ignition temperature of natural gas mixtures has been reported to be as low as 900 degrees F (482 degrees C). The flammable limits of natural gas-air mixtures at atmospheric pressure are about 5 percent to 15 percent by volume of natural gas. While natural gas consists principally of methane, it also contains ethane, small amounts of propane, butane, and higher hydrocarbons and may contain small amounts of nitrogen, carbon dioxide, hydrogen sulfide, and helium which will vary from zero to a few percent depending upon the source and seasonal effects. As distributed in the United States and Canada, natural gas also contains water vapor. This “pipeline quality” gas can contain 7 pounds or more of water per million cubic feet of gas (112 $kg/10^6\ m^3$). Some constituents of natural gas, especially carbon dioxide and hydrogen sulfide in the presence of liquid water, can be corrosive to carbon steel, and the corrosive effect is increased by pressure. The pressures used in CNG systems covered by NFPA 52 are substantial and well above those used in transmission and distribution piping and in other natural gas consuming equipment. As excessive corrosion can lead to sudden explosive rupture of a container, this hazard must be controlled. Pressures in CNG fueling stations are typically less than 5,000 psi (35 000 kPa).

2.3.7.2 Special Precautions for CNG

a) Provide venting for safety relief in areas where CNG is to be stored.

b) CNG is a highly flammable substance. Therefore, in design of facilities, use the following precautions to prevent fires from becoming uncontrollable:

(1) Do not directly extinguish fires with water.

(2) Do not extinguish large fires.

(3) Allow large fires to burn while cooling adjacent equipment with water spray.

(4) Shut-off CNG source, if possible.

(5) Extinguish small fires with dry chemicals.

c) CNG is non-toxic but can cause anoxia (asphyxiation) when it displaces the normal 21 percent oxygen in a confined area without adequate ventilation.

d) Because of corrosion problems, water in Department of Transportation (DOT) certified tanks is limited to 0.5 pounds per million cubic feet (8 kg/10^{6} m^{3}).

2.3.8 OTTO Fuels Information on OTTO fuels is contained in NAVSEA 56340-AA-MMA-010, Technical Manual for OTTO Fuel II Safety, Storage, and Handling Instructions, published by direction of Commander, Naval Sea Systems Command. Distribution of this document is restricted and Naval Sea Systems Command handles requests for information.

2.3.9 Fuel Additives

2.3.9.1 Fuel System Icing Inhibitor (FSII), High Flash, [MIL-DTL-85470] (diethylene glycol monomethyl ether (DIEGME))

a) Used in aviation turbine fuels to prevent the formation of ice crystals from entrapped water in the fuel at freezing temperatures. In addition, it has good biocidal properties, preventing growth of microorganisms in the fuel.

b) Avoid water entry/bottoms in storage tanks because the additive will dissolve in the water, reducing the concentration of additives left in the fuel.

c) FSII injection rates are:

Fuel	Allowable Range (% Volume)
JP-4	0.10 to 0.16
JP-5	0.15 to 0.20
JP-7	0.10 to 0.15
JP-8	0.10 to 0.15
Jet A	0.10 to 0.15
Jet A-1	0.10 to 0.15

d) Consult local, state, and federal regulations for appropriate disposal methods.

2.3.9.2 Corrosion Inhibitor/Lubricity Improver (CI), [MIL-DTL-25017]

a) Used in aviation turbine fuels (JP-5/JP-8). Also recommended for low sulfur diesel fuel to correct lubricity deficiencies.

2.3.9.3 Static Dissipater Additive. Static dissipater additive (SDA) enhances safety during handling and flight by reducing static discharge potential in the vapor space above the fuel. SDA increases the conductivity of the fuel, thus decreasing the electrostatic charge relaxation time (the rate of which a charge dissipates or travels through the fuel) which decreases the potential for ignition from static charges. The actual proportion is in accordance with the specific fuel military specification. For fuel system design purposes, assume a lower limit of 50 picosiemens per meter in the determination of relaxation requirements. In general, this means that JP-5, which does not contain SDA, will require additional relaxation time while JP-8, which contains SDA, will not.

2.3.10 Lubricating Oils

2.3.10.1 Steam Turbine Lubricating Oils [0-250] [MIL-PRF-17331]

a) For use in main turbines and gears, auxiliary turbine installations, certain hydraulic equipment, general mechanical lubrication, and air compressors.

b) Physical Properties:

(1) Flash Point: 400 degrees F (204 degrees C) minimum

(2) Pour Point: 20 degrees F (-6 degrees C) maximum

(3) Viscosity at 104 degrees F (40 degrees C), 80 to 104 x 10^{-5} ft^2/s (74 to 97 x 10^{-6} m^2/s)

2.3.10.2 Lubricating Oils [0-278], [MIL-PRF-9000]. For use in advanced design high-output shipboard main propulsion and auxiliary diesel engines using fuel conforming to MIL-F-16884.

2.3.10.3 Special Precautions for Lubricating Oils. To pump the oil when the ambient temperature of the lubricating oil is less than 20 degrees F (11 degrees C) above the pour point temperature, heat the lubricating oil. At the pour point temperature, the oil becomes gel-like and is difficult to pump.

2.3.11 Hydrazine - Water (H-70) [MIL-PRF-26536]

2.3.11.1 Physical Properties of H-70. This fuel is a mixture of 70 percent hydrazine and 30 percent water. It is a clear, oily, water-like liquid with a fishy, ammonia-like odor. It is stable under extremes of heat and cold; however, it will react with carbon dioxide and oxygen in the air. It may ignite spontaneously when in contact with metallic oxides such as rust.

2.3.11.2 Special Precautions for H-70. Keep working and storage areas clean and free of materials that may react with hydrazine. Provide only stainless steel in areas where extended contact is possible. Areas where incidental contact

is possible should be kept free of rust. Ensure the design does not allow the discharge of H-70 into storm or sanitary sewers.

2.4 PRODUCT SEGREGATION

2.4.1 Product Grades. Except as otherwise approved by Service Headquarters, provide separate receiving and distribution piping for the different products as follows:

a) Mogas.

b) Diesel fuel and distillate type burner fuels (No. 1, No. 2, and kerosene).

c) Aviation turbine fuel, separate systems for each grade.

d) Residual type burner fuels (No. 4, No. 5, and No. 6).

e) LPG.

f) CNG.

g) OTTO fuels.

2.4.2 Exceptions. Designs for different products using the same piping may be approved for long receiving lines such as from a tanker or barge pier or a cross-country pipeline to a storage facility. Where such common use occurs, make provisions for receiving and segregating the interface between two products. Consider the use of spheres or pigs to separate batches. Exceptions will not be approved for common systems to carry both clean and residual type fuels.

2.5 TRANSFER FLOW RATES. Table 1 shows the recommended range of design flow rates. In some cases, greater rates may be needed to meet the operational requirements of a particular facility.

2.6 PROTECTION AGAINST DAMAGE. Plan and design fuel facilities with the goal of protecting the fuels, storage, and transfer capability from enemy attack, terrorists, sabotage,

fire, seismic activity, and other damaging influences. In high threat areas, more extensive protection may be required. Consult appropriate Service Headquarters for guidance.

2.6.1 Degree of Protection. The specified degree of blast and damage-resistance capability will vary with geographical locations, site conditions, missions, and strategic importance of activities. NATO projects have their own specific criteria which govern protection level requirements.

2.6.2 Design Criteria. In general, design fuel facilities in accordance with MIL-HDBK-1013/1 or Corps TM 5-853-3. Consult appropriate Service Headquarters for appropriate directives and instructions.

2.7 COMMUNICATIONS. Provide telephone communications (direct line for Air Force projects only) between separated areas such as receiving, dispensing, pump stations, and storage to coordinate operations involved in fuel transfer. Refer to MIL-HDBK-1004/1 or Corps TM 5-811-9.

2.8 VAPOR RECOVERY. Provide vapor recovery where required by local, state, or federal regulations (40 CFR 60 Subpart XX) or other sections of this handbook. Refer to paragraph on air quality control in this section of the handbook.

2.9 WORKER SAFETY. Design facilities to comply with the most stringent of the Occupational Safety and Health Act (OSHA) or the host nation standards. Also, ensure that design complies with service-specific occupational safety and health criteria.

2.10 ELECTRICAL DESIGN

2.10.1 Area Classifications. Classify all fuel facilities, except as modified by this handbook, in accordance with API RP 500, NFPA 30, NFPA 70, and ANSI C2. These practices may be modified where unusual conditions occur, where locations contain hazardous atmospheres classified other than Group D (as defined by NFPA 70), or where equipment malfunction may cause hazardous situations. Use sound judgment in applying these requirements. Specify a higher classification wherever necessary to maintain safety and continuity of service. Treat

combustible liquids under pressure as flammable liquids. Ensure design is in accordance with the requirements designated in NFPA 70 for the specific division and class.

2.10.1.1 Class I, Division 1. Class I, Division 1 locations include:

a) Outdoor locations and those indoor locations having positive mechanical ventilation that are within 3 feet (0.9 m) of the fill openings or vents on individual containers to which flammable liquids are being transferred. Provide alarm devices on all ventilation systems.

b) Outdoor locations within 5 feet (1.5 m) of open end of vents and openings on flammable liquid storage tanks.

c) Entire pit, sump, open trench, or other depression, any part of which is within a Division 1 or 2 location and is without mechanical ventilation.

d) Locations within and on exterior walls of API separators.

e) Locations at fuel dispensers.

f) Locations within 3 feet (0.9 m) of vent, extending in all directions, when loading a truck through the bottom connection.

g) All pump houses handling aviation turbine fuels.

h) Any area containing electrical equipment that is or may be exposed to atomized fuel and where the ambient temperature can at any time be above the flash point of the fuel.

2.10.1.2 Class I, Division 2. Class I, Division 2 locations include:

a) Adequately ventilated indoor locations within 5 feet (1.5 m) of the surface of pumps, air relief valves, withdrawal fittings, meters, valves, screwed fittings, flanges, and similar devices that are located in pipelines handling flammable and combustible liquids under pressure except as modified by the above paragraph on pump houses

handling aviation turbine fuels. Class I, Division 2 locations extend 25 feet (7.6 m) horizontally from any surface of the device and upward 3 feet (0.9 m) above grade level. Provide alarm devices on the ventilation systems for products with a flash point below 100 degrees F (38 degrees C) (e.g., Class I liquids).

b) Outdoor locations and those indoor locations having positive mechanical ventilation that are between 3 feet (0.9 m) and 8 feet (2.4 m), extending in all directions, to fill openings and vents on individual containers to which flammable and combustible liquids are being transferred. Class I, Division 2 locations extend to 3 feet (0.9 m) above grade and between 3 feet (0.9 m) and 10 feet (3 m) horizontally to Division 1 zones.

c) Outdoor locations between 5 feet (1.5 m) and 10 feet (3 m) of the Division 1 zones at vents and openings, or flammable or combustible liquid storage tanks.

d) Entire pit, sump, open trench, or other depression, any part of which is within a Division 1 or 2 location and is provided with mechanical ventilation.

e) Outdoor locations within 3 feet (0.9 m) of the exterior surface of pumps, air relief valves, withdrawal fittings, meters, and similar devices that are located in pipelines handling flammable or combustible liquids under pressure. Class I, Division 2 locations extend upward 18 inches (450 mm) above grade level and within 10 feet (3 m) horizontally from any surface of the device.

f) Locations within and extending upward to the top of the dikes that surround aboveground tanks containing flammable or combustible liquids and within 10 feet (3 m), extending in all directions of the tank shell, ends, or roof.

g) Locations extending upward 18 inches (450 mm) above grade level within 50 feet (15.2 m) horizontally from any surface of API separators, whether installed indoor or outdoors.

Table 1
Design Flow Rates

Service[1]	Aviation Turbine Fuel	Diesel Fuel	Burner Fuel Oils	Mogas
Between storage tanks, gpm (L/s)	600 to 1,200 (38 to 76)	600 to 1,200 (38 to 76)	600 to 1,200 (38 to 76)	600 to 1,200 (38 to 76)
Tank car unloading to storage (per car), gpm (L/s)	300 to 600 (19 to 38)	300 to 600 (19 to 38)	300 to 600 (19 to 38)	300 (19)
Tank truck unloading to storage (per truck), gpm (L/s)	300 to 600 (19 to 38)	300 to 600 (19 to 38)	300 to 600 (13 to 38)	300 to 600 (19 to 38)
Gravity receipt tank to storage gpm (L/s)	600 (38)	600 (38)	600 (38)	600 (38)
Storage to tank truck/refueler loading (per truck), gpm (L/s)	300 or 600 (19 or 38)	300 or 600 (19 or 38)	300 or 600 (19 or 38)	300 or 600 (19 or 38)
Delivery from direct fueling stations to aircraft, gpm (L/s)	Varies[2]	N/A	N/A	N/A
Delivery from direct fueling stations to helicopters, gpm (L/s)	Varies[2]	N/A	N/A	N/A
Between super tanker and storage, gpm (L/s)	16,800 (1060)	16,800 (1060)	16,800 (1060)	16,800 (1060)
Between regular tanker and storage, gpm (L/s)	7,000 (442)	7,000 (442)	7,000 (442)	7,000 (442)
Between barge and storage, gpm (L/s)	2,800 (177)	2,800 (177)	2,800 (177)	2,800 (177)
To fleet oilers, gpm (L/s)	3,500 (221)	3,500 (221)	N/A	N/A
To AOEs, gpm (L/s)	7,000 (442)	7,000 (442)	N/A	N/A
To carriers, gpm (L/s)	2,450 (155)	2,450 (155)	N/A	N/A
To average cruisers, gpm (L/s)	700 (44)	1,400 (88)	N/A	N/A
To average destroyers, gpm (L/s)	700 (44)	1,400 (88)	N/A	N/A
Storage to tank car loading (per car), gpm (L/s)	300 or 600 (19 or 38)	300 or 600 (19 or 38)	300 or 600 (19 or 38)	300 or 600 (19 or 38)

Table 1 (Continued)
Design Flow Rates

[1] At dockside, deliveries from tankers should be assumed to be at a pressure of 80 to 100 psig (600 to 700 kPa), and deliveries to tankers to be at 60 psig (400 kPa). Rates to other ships are maximums based on fueling at sea capacities. Lesser rates for fueling at piers can be used if more practical. Loading rates are based on 40 psig (300 kPa) maximum per hose at ship connections.

[2] See appropriate Service Headquarters for actual fueling rates for aircraft for which design applies.

---

h) Locations 25 feet (7.6 m) horizontally in all directions on pier side from portion of hull containing cargo and from water level to 25 feet (7.6 m) above cargo tank at highest point.

i) Area between 3 feet (0.9 m) and 10 feet (3 m) extending in all directions from vent when loading a truck. Also upward 18 inches (450 mm) above grade and within 10 feet (3 m) horizontally from the truck load connection.

2.10.1.3 Non-Classified Locations. Non-classified locations include:

a) Outdoor locations having closed piping systems handling flammable or combustible liquids that have no pumps, air relief valves, withdrawal fittings, valves, screwed fittings, flanges, meters, or similar devices which create joints in piping.

b) Office buildings, boiler rooms, control rooms, and similar locations that are outside the limits of hazardous locations, as defined above, and are not used for transferring flammable or combustible liquids or containers for such liquids.

c) Areas in which flammable and combustible liquids are stored in accordance with NFPA 30, outside the limits of a classified location, and the liquids are not transferred.

2.10.2 Illumination. Unless otherwise directed by Service Headquarters, illuminate all working areas for night operations to the minimum intensity recommended in Table 4 of API RP 540. For facilities within the jurisdiction of the U. S. Coast Guard under 33 CFR Part 154, illuminate to the minimum intensity required by that regulation. Provide security lighting in accordance with MIL-HDBK-1013/1A for the Navy, Corps TM 5-811-1 for the Army, and AFMAN 32-1080 and AFOSH Standard 91-38 for the Air Force. If local or state regulations exist, follow the most stringent requirements.

2.10.3 Grounding and Bonding. The following references apply to grounding and bonding systems:

a) ANSI/IEEE 142-91

b) NFPA 70

c) NFPA 77

d) NFPA 780

e) API RP 540

f) API RP 2003

g) IEEE 1100

h) NFPA 407

2.10.3.1 Grounding Requirements. Ground the following items in accordance with Article 250 of NFPA 70:

a) Motor, generator, and transformer frames.

b) Non-current-carrying metallic parts of electrical equipment and installations, such as enclosures for panelboards, switchgear, and motor control centers.

c) Metallic messengers of self-supporting cables.

d) Exposed conductive materials enclosing electrical conductors, such as metallic conduit, metallic tubing, metallic armoring, sheaths and shields, cable troughs, trays and racks, wireways, and busways.

2.10.3.2 Current and Lightning Protection. Provide lightning protection in accordance with Corps TM 5-811-3, AFMAN 88-9, NFPA 780, MIL-HDBK-1004/6, and local installation requirements. For fault current protection and lightning protection, ground the following items through ground rods or beds or bond to a grounded network. Provide ground for these items as required by the above references.

a) Substation fences.

b) Lightning arrestors and lightning shield conductors.

c) Operating mechanisms of overhead airbreak switches.

d) Canopies.

e) Aboveground storage tanks.

2.10.3.3 Static Electricity Prevention. To prevent static electricity, ground the following items directly through ground rods or beds or bonded to a grounded network. Do not exceed 10,000 ohms of resistance to ground for the following items:

a) Tanks, vessels, stacks, heat exchangers, and similar equipment not directly supported or bolted to a grounded supporting network.

b) Pipe support columns at intervals normally not exceeding 75 feet (23 m).

c) Aircraft direct fueling stations.

d) Hydrant pits.

e) Internal floating pans bonded to the storage tank shell.

f) Aboveground portions of electrically isolated piping at truck, rail, and marine loading and unloading stations.

2.10.3.4 Installation. Isolate grounding systems for instrumentation, instrument control boards, and electronic equipment from all other ground systems. Additional grounding is not required for overhead electrical equipment bolted

directly to grounded metallic structures. Where feasible, separate the conductor connecting a lightning rod to the grounding electrode from other grounding conductors. Route with a minimum of sharp bends and in the most direct manner to the grounding electrode. Do not use this electrode in lieu of grounding electrodes which may be required for other systems. This provision does not prohibit the required bonding together for grounding electrodes of different systems.

2.11 SECURITY. Unless otherwise directed by Service Headquarters, provide security fencing around all petroleum facilities to ensure safety and inhibit sabotage, theft, vandalism, or entry by unauthorized persons. Install a 7-foot (2.1 m) fabric height fence of chain-link type with three-strand barbed wire outriggers on top or its equivalent. Ensure fencing and gates are in accordance with MIL-HDBK-1013/10 or Corps TM 5-853-3. Contact the Installation Security Organization for additional requirements.

2.12 CATHODIC PROTECTION. Obtain the services of a National Association of Corrosion Engineers (NACE)-certified Corrosion Specialist or Cathodic Protection Specialist or a registered professional Corrosion Engineer to perform all cathodic protection design and testing. For Army and Air Force designs, comply with the current Engineering Technical Letters in addition to the following requirements. For Navy designs, comply with NAVFAC letter 11012 046C/cmm.

2.12.1 Tanks. For all underground steel tanks and tank bottoms of aboveground vertical tanks, provide cathodic protection in accordance with MIL-HDBK-1004/10, API RP 651, 40 CFR Part 280, Corps TM 5-811-7, UL 1746, and AFMAN 85-16. For additional information on cathodic protection, refer to NAVFAC MO-230 and AFI 32-1054. Current tank design configuration electrically isolates the tank bottom from surrounding earth. Therefore, install cathodic protection between the liner and the tank bottom.

2.12.2 Piping. For all carbon steel and stainless steel underground and underwater piping, provide cathodic protection in accordance with MIL-HDBK-1004/10, Corps TM 5-811-7, and 40 CFR Part 280 for piping associated with underground storage tanks. For additional information on cathodic protection,

refer to NAVFAC MO-230, NACE Control of Pipeline Corrosion, and 49 CFR 195. Buried stainless steel corrodes and, therefore, must be cathodically protected.

2.12.3 Structures. Obtain the services of a NACE-certified engineer to evaluate the need for cathodic protection on steel portions of fueling support facilities. Comply with MIL-HDBK-1004/10 or Corps TM 5-811-7.

2.13 ENVIRONMENTAL PROTECTION

2.13.1 General Policy. It is the firm policy of the Department of Defense to design and construct fueling facilities in a manner that will prevent damage to the environment by accidental discharge of fuels, their vapors or residues. Designs must comply with foreign government, national, state, and local environmental protection regulations that are in effect at a particular facility.

2.13.2 Regulations

2.13.2.1 Within U.S.A. Within the jurisdiction of the United States, adhere to the following environmental protection regulations:

a) National Environmental Policy Act (NEPA), 42 USC 4321.

b) U.S. Coast Guard Regulations, 33 CFR Part 154.

c) Environmental Protection Agency Regulations, 40 CFR Part 60.

d) Environmental Protection Agency Regulations, 40 CFR Part 112.

e) Environmental Protection Agency Regulations, 40 CFR Part 122.

f) Environmental Protection Agency Regulations, 40 CFR Part 280.

g) Environmental Protection Agency Regulations, 40 CFR Part 281.

h) Department of Transportation Regulations, 49 CFR Part 195.

i) Obtain additional data on anti-pollution regulations for specific locations from Service Headquarters Environmental Support Office.

2.13.2.2 Outside U.S.A. At facilities in other countries, consult appropriate service environmental directives, DODD Overseas Environmental Baseline Guidance Doctrine, and for Navy, OPNAVINST 5090.1.

2.13.3 Transfer of Fuel at Ports

2.13.3.1 Bulk Transfer. Compliance with 33 CFR Part 154 is required for each fixed facility capable of transferring fuel in bulk to or from a vessel with a capacity of 10,500 gallons (39 700 L) or more. These facilities are required to have an operations manual approved by the Captain of the Port. In the operations manual, include the requirement for the following systems:

a) Hose assemblies

b) Loading arms

c) Closure devices

d) Monitoring devices

e) Small discharge containment

f) Discharge removal

g) Discharge containment equipment

h) Emergency shutdown

i) Communications

j) Lighting

2.13.3.2 Vapor Collection. For facilities that collect vapor from vessel cargo tanks, ensure that the requirements of 40 CFR Part 60 for the following items are met:

a) Vapor line connections

b) Vessel liquid overfill protection

c) Vessel vapor overpressure and vacuum protection

d) Fire, explosion, and detonation protection

e) Detonation arrestors, flame arrestors, and flame screens

f) Inerting, enriching, and diluting systems

g) Vapor compressors and blowers

h) Vapor recovery and vapor destruction units

2.13.4 Air Quality Control

2.13.4.1 Design Requirements. Regulatory requirements pertaining to air quality control will vary according to locality and to type and size of the petroleum vapor source. Petroleum storage and dispensing facilities are common sources of air pollution. Their emissions are typically restricted through requirements in state and local regulations. Federal regulations (40 CFR 60 Subparts Kb and XX) may also apply depending on the product handled and size of the tank or facility being constructed.

2.13.4.2 Aboveground Storage Tanks. Federal regulation 40 CFR 60 Subpart Kb requires that tanks used for the storage of fuel with a design capacity greater than 19,000 gallons (72 000 L) having a true vapor pressure greater than 0.75 psia (5 kPa) at operating temperature must be equipped with either: 1) a fixed roof in combination with an internal floating pan; 2) an external floating roof equipped with a dual seal closure device between the wall of the tank and the roof edge; or 3) a closed vent system designed to collect all volatile organic compound (VOC) vapors and gases discharged from the tank and a control device designed to reduce VOC emissions by 95 percent or greater. It is the design intent that most vertical aboveground tanks will have internal honeycomb floating pans with foam-filled fabric seals (primary and secondary) and that vapor recovery will be used only if required by federal, state, or local regulations for the type of fuel and type of

tank proposed, except as specifically required by another section of this handbook. Refer to Section 8 of this handbook for specific requirements for floating pans.

2.13.4.3 Truck and Rail Loading Facilities. Tank truck and tank car loading facilities constructed or modified after December 17, 1980 which load an annual average of more than 20,000 gallons (76 000 L) per day of fuel having a true vapor pressure (TVP) of 0.75 psia (5 kPa) or greater must discharge the vapors resulting from such operations into a closed system. Ensure this system leads to a vapor recovery or disposal system which is capable of removing 95 percent of the petroleum vapor before final discharge into the atmosphere. Equip bulk gasoline terminals (handling fuels with TVP $\geq$ 4.003 psia or 27.60 kPa) with a vapor collection system designed to collect total organic compound (TOC) vapors displaced from tank trucks during loading. Emissions from the vapor control system due to loading must not exceed 35 mg of TOC per liter of gasoline loaded. For facilities with an existing vapor processing system, the TOC emissions must not exceed 80 mg of TOC per liter of gasoline loaded (40 CFR 60 Subpart XX).

2.13.4.4 Permit Requirements. Air quality permits are typically required for the construction of petroleum storage and dispensing facilities. It is essential for designers to review regulatory requirements to ensure incorporation of proper environmental controls. State and local regulations are primary sources for air quality requirements, but for particularly large facilities, it is also beneficial to confer with the EPA regional office. The permit review and air quality controls will further depend on whether the construction site is located in an attainment or non-attainment area for ozone. Different permit programs apply in these areas, but they can both yield strict control requirements depending on the air quality of the area. An emissions offset analysis may be necessary before any construction permit can be granted. This analysis will require and demonstrate a reduction in VOC emissions from other sources in the locality where the new source construction is to take place. The offset can be obtained by providing new or better controls or otherwise decreasing emissions from an existing source.

2.13.5 Water Quality Control

2.13.5.1 Design Requirements. Protection of the natural waters against pollution from discharge of petroleum is achieved by complying with federal, state, and local regulations.

2.13.5.2 Spill Prevention. In general, 40 CFR Part 112 requires the preparation of a Spill Prevention Control and Countermeasure (SPCC) Plan for facilities that may discharge fuel into navigable waters of the United States. Specific design features are necessary to meet the SPCC objectives at all facilities. The SPCC plan must demonstrate that the fuel facility will be designed and constructed in a manner that will prevent spillage, and should such a spillage occur, prevent the spill from leaving the property and entering a waterway. Review API Bull D16 to assist with conformance to regulations. Refer to 33 CFR Part 154 for small discharge containment.

2.13.5.3 Leak Detection. Install leak detection on aboveground tank bottoms, underground storage tanks, and underground piping. Ensure leak detection meets all the requirements of 40 CFR 280, 40 CFR 281, 49 CFR 195, and state and local regulations.

2.13.5.4 Stormwater Discharge. A National Pollutant Discharge Elimination System (NPDES) Permit, 40 CFR Part 122, may be required for the discharge of stormwater. A review of Federal, State, and local stormwater regulations is required prior to design and construction. Discharge of stormwater includes:

a) Controlled drainage from storage tank areas with impermeable diked enclosures or drainage systems leading to impoundments.

b) Drainage from treatment systems.

c) Drainage from facility transfer operations, pumping, and tank car and tank truck loading/off-loading areas.

d) Drainage from equipment/vehicle maintenance areas.

2.13.5.5 Oil/Water Separators. Pass water from stormwater drainage systems through a gravity type oil water separator. Check with local environmental authorities, select either a conventional rectangular API type or one with inclined parallel plates. Where possible, design the separator as a rectangular vessel with a fully open top with lid for ease of inspection and cleaning.

a) Design and construct the separator in accordance with the following:

(1) NAVFAC DM 2.04, MIL-HDBK-1002/1 and MIL-HDBK-1002/2.

(2) NAVFAC P-272.

(3) Appropriate service guide specification.

(4) Army Corps of Engineers ETL 1110-3-466.

(5) API Manual on Disposal of Refinery Wastes, Chapters 3 and 5.

(6) API 421, Design and Operation of Oil-Water Separators.

b) Consider the following items in sizing the oil/water separator:

(1) Anticipated inlet flow rate of a 5-year, 1-hour duration storm event.

(2) Type of fuel.

(3) Specific gravity and viscosity of fuel.

(4) Specific ambient and product temperature ranges.

(5) Product storage capacity required.

(6) Possible contaminants present.

(7) Operating parameters intermittent or continuous.

c) Require parallel plates to be constructed from non-oleophilic materials such as fiberglass. Arrange the plates in either a downflow or crossflow mode so that the oil collects in the high point of the corrugations and rises to the top without clogging from settleable solids.

2.13.5.6 Dewatering. Where dewatering is necessary and contamination is suspected, test the groundwater prior to construction to determine the extent of contamination. If the groundwater is, or has the potential to be, contaminated with petroleum products, review state and local regulations for acceptable treatment methods. Permits may be required for treatment and/or disposal of the water. Some possible treatment methods are:

a) Off-site disposal at an industrial wastewater facility.

b) On-site treatment with a portable groundwater treatment system and discharge to surface or groundwater.

c) Discharge to a sanitary sewer system. Treatment through an oil/water separator may be required by the owner of the sanitary system.

2.13.5.7 Wastewater Disposal. Provide a holding tank for wastewater. Wastewater is any water which has been in contact with significant quantities of fuel such as water collected from tank sumps, equipment drains, and equipment sumps. Ensure that tank construction conforms to federal and state environmental requirements. Provide a means to remove wastewater for off-site disposal.

2.13.6 Underground Storage Tanks

2.13.6.1 Design Requirements. All underground and cut and cover storage tanks are to be double wall type. For underground storage tanks larger than 110 gallons (420 L), the following are required by 40 CFR 280:

a) Corrosion protection for tanks and associated underground piping.

b) High level alarm.

c) Spill and overfill protection.

d) Release detection.

2.13.6.2 Other Criteria. If tank is to be installed in a locale or state with more stringent criteria, use the more stringent criteria. If tank is to be installed in a NATO country other than the CONUS, follow the most stringent of local regulations or NATO Airfield Standard Design - Jet Fuel Storage and Dispensing Systems.

2.14 FIRE PROTECTION

2.14.1 General Requirements. Design all petroleum fuel storage, handling, transportation, and distribution facilities with full consideration of the hazardous nature of the fuels to be handled and their vapors. Ensure compliance with MIL-HDBK-1008.

2.14.2 Protection of Aboveground Storage Tanks

2.14.2.1 Fire Protection Water Systems. Provide fire protection water mains, hydrants, valves, pumps, and application devices to permit control of brush and grass fires and cooling of storage tanks in the event of a fire exposure. Provide a minimum of two hydrants. Locate hydrants and valves outside of diked areas. Locate hydrants so that protected exposures can be reached through hose runs not exceeding 300 feet (90 m). Comply with all requirements of MIL-HDBK-1008 for water supply.

2.14.2.2 Fire Protection Foam Systems. With the use of the full contact, aluminum honeycomb floating pans in fuel tanks, foam systems are not required.

2.14.3 Protection of Tank Truck and Tank Car Facilities. For facilities (such as loading stands) used for the transfer of flammable or combustible liquids to or from tank truck, refuelers, tank cars, drums, or other portable containers, provide portable dry chemical extinguishers of appropriate size, number, and location for the exposure. Where foam systems exist for the protection of other exposures (such as storage tanks), consider extending the foam system to hydrants or monitors located within range of the loading or off-loading facility.

2.14.4 Protection of Aircraft Fueling Facilities. At all ramps and aprons used for fueling aircraft, excluding hot fueling stations, provide portable fire extinguishers in accordance with NFPA 407. For hot fueling stations, provide a twin agent unit (TAU) at each station, unless prohibited by specific service policy. A TAU is a dual agent extinguisher consisting of one dry chemical filled tank for knocking down a three-dimensional flowing fuel fire and an aqueous film-forming foam (AFFF) filled tank for smothering and extinguishing a pool fire. For Navy and Marine Corps projects, use NAVAIR criteria. For MILCON projects, include the TAU as part of the project.

2.14.5 Protection of Support Facilities. Comply with MIL-HDBK-1008 for fire protection of support facilities.

2.14.6 Protection of Fuel Piers. Provide protection for piers with fixed piping systems used for the transfer of flammable or combustible liquids in accordance with the following:

a) MIL-HDBK-1008

b) MIL-HDBK-1025/1, 1025/2, and 1025/6

c) NFPA 30

d) NFPA 30A

e) NFPA 307 (If liquids are handled in bulk quantities across general purpose piers and wharves.)

2.14.6.1 Fire Protection Water Systems. Use fire water systems with hydrants located so that vessels alongside can be reached through hose lines not longer than 300 feet (90 m). In general, use dry pipe sprinkler systems under piers in areas subject to freezing temperatures. Consult MIL-HDBK-1008 to determine total water demands for piers based on an extra hazard occupancy classification.

2.15 ELECTROMAGNETIC RADIATION HAZARDS. Potential ignition hazards to petroleum storage, dispensing, or handling facilities may be created by emissions from electromagnetic devices such as radio and radar. Beam/signal strength has been known to cause ignition of flammable vapor-air mixtures

from inductive electrical heating of solid materials or from electrical arcs or sparks from chance resonant connections. For additional information, refer to MIL-STD-461D and NFPA 407. Incorporate the following specific precautions and restrictions in the design of petroleum fuel facilities:

a) Locate the radio transmitting antennas as far as practically possible from fuel storage or transfer areas.

b) Do not locate the fuel storage or transfer facilities closer than 300 feet (90 m) from aircraft warning radar antennas.

c) Do not locate fuel storage or transfer facilities closer than 500 feet (150 m) from airport ground approach and control equipment.

d) Do not locate fuel storage or transfer facilities closer than 300 feet (90 m) from areas where airborne surveillance radar may be operated.

e) Do not locate fuel storage and transfer facilities closer than 100 feet (30 m) from airport surface detection radar equipment.

2.16 IDENTIFICATION. Identify all pipelines and tanks as to product service by color coding, banding, product names, NATO designation, and directions of flow in accordance with MIL-STD 161F. Mark valves, pumps, meters, and other items of equipment with easily discernible painted numbers or numbered corrosion-resistant metal or plastic tags attached with a suitable fastener. Ensure numbers correspond to those on the schematic flow diagrams and other drawings for the installation.

2.17 ANTISTATIC DESIGN. Consider static build-up in the design. Refer to CRC Report No. 346 and No. 355, Electrostatic Discharges in Aircraft Fuel Systems; API RP 2003; and NAVFAC MO-230. Because of the many variables involved, such as properties of fuels and geometry of equipment layouts, no specific limits are established for design factors such as flow velocities.

2.17.1 Piping Inlet Connections. Design connections to tanks for reduced velocity and to prevent splashing by use of diffusers. Fuel products are not permitted to free fall under any circumstances. Position inlet as close to the tank floor as possible to limit free fall.

2.17.2 Enclosed Vapor Spaces. Spaces above flammable or combustible hydrocarbons in tanks or other liquid containers must not have any pointed projection or probes which could be focal points for static electricity discharges.

2.17.3 Filter/Separators and Fuel Quality Monitors. The heaviest electrostatic charges are usually developed in filtering elements of this equipment. The design should attempt to reduce such charges before fuel is transferred into storage tanks, vehicle tanks, or any equipment containing vapor spaces.

a) By means of residence time in piping or in a relaxation tank, provide 30 seconds relaxation time between this equipment and discharging into a tank or vehicle. The only fuel currently in the inventory that requires relaxation time is JP-5.

b) Relaxation time is not required for projects handling only fuels containing a static dissipated additive that provides a conductivity level greater than 50 conductivity units (50 picosiemens per meter) at the fuel temperature of the operations. Examples of this are JP-4 and JP-8.

c) Prevent static build-up during filling of filter/separators by providing a means to slow-fill the vessels. Refer to Standard Design AW 78-24-28.

2.17.4 Aircraft Direct Fueling Stations. JP-5 requires a 30-second residence time in the piping or in a relaxation tank before being discharged into the aircraft to allow separate charges generated by the filtering elements to recombine and neutralize themselves. Where possible, design the piping layout to provide the required 30-second relaxation time without use of a relaxation tank.

2.17.5 Truck Bottom Loading. Provide facilities only capable of bottom loading of trucks. Army facilities that routinely handle trucks that are not capable of bottom loading must obtain approval for the addition of top loading capability from the Army Service Headquarters. Refer to NFPA 77 and API RP 2003 for additional information and requirements.

2.18 OPERATION AND MAINTENANCE DOCUMENTATION

2.18.1 Equipment Operation and Maintenance Documentation. In all construction and procurement contracts, require operation and maintenance data for pieces of equipment which require maintenance and/or which require setting, adjusting, starting, stopping, calibrating, and similar operational activities.

2.18.2 Operation and Maintenance Support Information (OMSI). The determination to include a requirement for a complete OMSI for new facilities or a major rehabilitation will be made by the appropriate Service Headquarters.

2.19 PROTECTION AGAINST SEISMIC ACTIVITY. Design fuel facility buildings and structures in accordance with NAVFAC P-355, AFMAN 88-3, Chapter 13, and Corps TM 5-809-10. Design aboveground vertical storage tanks in accordance with API Std 650, Appendix E, utilizing an importance factor of I = 1.25 for new tanks. Analyze flexible aboveground pipelines using techniques to account for harmonic response.

2.20 STRUCTURAL DESIGN. Design all buildings and structures in accordance with MIL-HDBK-1002 series or for Corps of Engineer projects, EI 015010, Corps TM 5-809-2, Corps TM 5-809-3, Corps TM 5-809-6, Corps TM 5-809-10, Corps TM 5-809-10-1, and Corps TM 5-809-10-2.

2.21 AIRFIELD/AIRSPACE REQUIREMENTS. Incorporate requirements for airfield and airspace clearances into all construction documents for work near an airfield. Verify compliance with MIL-HDBK-1021/1.

2.22 PERMITS. The planner, programmer, and designer should give consideration to required permits (dredging, air emissions, water discharges, etc.). Considerations are cost of permit, cost impact of project to meet permit requirements, schedule impact of permit, who is to obtain permit, and at what time in the project schedule should application be made.

Section 3: BULK FUEL STORAGE FACILITIES

3.1 INTRODUCTION. This section provides guidance for the design of bulk fuel storage facilities, including those components normally located within a typical compound. These components include pipeline receiving facilities, tank truck and tank car receiving facilities, pipeline dispensing (pumping) facilities, tank truck and tank car loading facilities, and all related piping and equipment. Fuel storage tanks are discussed in Section 8 and piping systems in Section 9 of this handbook. Support facilities, which are discussed in Section 11 of this handbook, are often collocated within bulk facilities. Installation pipelines connecting bulk facilities with marine receiving and dispensing facilities, aircraft fueling facilities, and ground vehicle fueling facilities, as well as interterminal pipelines are discussed in Section 6 of this handbook. If fuel can be pumped directly from a tank into an aircraft, direct fueling system or a refueler, it is an operating storage tank regardless of size and location and must meet the applicable requirements for aviation turbine fuel operating tanks.

3.2 GENERAL REQUIREMENTS. Section 2, General Design Information, contains important information on fueling facilities. Do not begin the design of any fueling system without first becoming completely familiar with Section 2 of this handbook.

3.3 RECEIVING FACILITIES. Fuel is normally received at bulk fuel storage facilities by pipeline, tank truck, tank car, barge, or ship. In many cases, the fuel is pumped by pipeline from the marine receiving facility to the bulk storage facility. Marine receiving facilities are addressed in Section 5 of this handbook. Service Headquarters, with concurrence from the Defense Fuel Supply Center, will determine the appropriate type of delivery method based on mission requirements and an economic analysis. A secondary method of delivery is normally required for aviation activities.

3.3.1 Pipeline Receiving Facilities

3.3.1.1 General Criteria. Petroleum fuels may be supplied to bulk fuel storage tanks by interterminal pipelines which may be dedicated to serving the particular facility or may be commercial pipelines handling a number of types or grades of fuel for more than one user. In some cases, the pipeline will be an installation pipeline. If different fuel types are used, separate each type within the receiving facility. Exercise extreme care to avoid designing a system that could create damaging surges in the pipeline created by quick closing valves.

3.3.1.2 Equipment Required

a) Provide pressure-regulating valves to reduce pipeline pressures to the design pressure of the facility's piping and equipment. Provide a block valve at both the upstream and downstream side of each pressure-regulating valve. Prior to designing any features into the system which might affect the flow from a pipeline, contact the operator of the pipeline to ascertain the current operating conditions, evaluate the use of regulating valves, conduct a surge analysis of the pipeline, and determine whether the use of regulating valves is appropriate.

b) Provide a meter at the receiving end of the line to measure quantities of fuel received. Turbine-type meters are commonly used for pipeline receipt. However, positive displacement meters are acceptable if available at the required flow rate. Consider also the use of alternative meter technologies such as ultrasonic meters. Compensate for fuel temperature at the point of custody transfer. Provide a strainer on the upstream side of the meter and connections for proving the meter with a portable prover. A meter prover connection consists of a valve in the main pipeline with a tee on both the upstream and downstream sides of the valve. The branch of each of the tees has a valve and a hose connection. The master meter can be attached to the hose connections.

c) Provide a means for sampling each pipeline product at a breakout manifold.

d) Provide provisions for a contractor to bolt pig launchers and receivers to the system for pigging. Arrange pig receiving connections to avoid introducing pipeline sludge and sediment into the tanks. Pig launching and receiving

provisions are required for interterminal (cross-country) and installation (as described in Section 6 of this handbook) underground pipelines.

e) Provide an interface tank to receive mixed fuels at the beginning and end of a shipment unless the commercial pipeline company can provide this service satisfactorily.

f) Provide a breakout tank only if pipeline flow cannot be stopped due to pipeline operational requirements. Provide valves to divert the flow of fuel from a receipt tank to the breakout tank in the event fuel transfer is blocked by a manual or automatic valve within the fuel facility system such that the fuel facility system would be overpressurized from transient surge or high pressure from deadheading a pipeline supply pump. Provide appropriate breakout tank overfill alarms and alarm breakout operation so fuel facility operators can take necessary steps to stop pipeline flow. Provide means of transferring fuel out of breakout tank back to fuel systems after a breakout event. Conduct a thorough review with the pipeline operator and perform a transient surge analysis to determine if surge pressure reduction methods are required to avoid damage to the pipeline.

g) Provide means of inbound filtration for all products. The selection of filtration depends on anticipated impurities, the source of fuel, and the shipping methods. For aviation turbine fuels, refer to “Special In-Bound Filtration” paragraph of Section 4 of this handbook. Consider the use of micronic filters, cyclonic filters, and haypack filters as possible filtration/pre-filtration devices. Avoid the use of water slugs or other rapid-closing valves on pipeline receipt facilities.

3.3.2 Tank Truck and Tank Car Off-loading Facilities

3.3.2.1 General Criteria. Bulk fuel storage facilities may be supplied with fuel by tank truck or tank car or both. At facilities with pipeline or water transport as their principal supply source, provide tank truck or tank car deliveries as a secondary supply source. Tank truck deliveries are the most common method. However, special transportation considerations or changing circumstances may make the use of rail facilities desirable. Therefore, at an activity with railroad service,

lay out a tank truck receiving facility so that the system can be easily and economically extended to the existing rail spur. See Facility Plate Nos. 002 through 004.

a) Do not locate tank truck or tank car receiving facilities closer than 50 feet (15 m) from buildings, aboveground storage tanks, overhead power lines, or public roads.

b) Provide an adequate number (minimum two) of positions to off-load the daily fuel requirements of the facility in an eight-hour period without causing detention or demurrage of delivery conveyances.

c) Provide separate off-loading connections for each type of fuel to be handled. To facilitate the use of tank trucks with multiple independent compartments, provide a hose manifold with a minimum of two connections per tank truck. A manifold with hose connections equal to the number of truck compartments is recommended for quick turnaround. If less than five connections are provided, leave a blind flange on the end of the manifold to accommodate additional connections.

d) At each off-loading position, provide an impermeable retention and controlled drainage system leading to a containment or treatment system. Pave the spaces between islands, and on each side of the outer islands, with concrete pitched a minimum of one percent toward catch basins or trench drains. Design containment per the most stringent of International Conference of Building Officials (ICBO), UBC 902; Building Officials and Code Administrators International, Inc. (BOCA) F2315; and state and local regulations. Provide containment with capacity equal to the larger of the volume of the largest tank truck or tank car compartment to be off-loaded or the runoff from a rainfall of intensity equal to a 5-year expectancy, 1-hour duration storm. Provide a normally closed valve on the drain system to allow for containment during fueling operations and which can be opened to drain when necessary. This valve may be motor-operated with the concurrence of Service Headquarters. Tank trucks can be as large as 10,000 gallons (38 000 L) in capacity and tank cars as large as 40,000 gallons (151 000 L). If a canopy, which is designed to preclude rain from the contained areas, is installed, reduce the sizing for rainfall, accounting only for wind-blown rain. Consider combining the containment with

other containments or treatment facilities on-site. However, take the level of contamination in each containment area into consideration. Do not use asphalt within a containment area.

e) For off-loading tank trucks, arrange the flow of traffic to permit continuous forward movement of tank trucks at all times. Commercial tank trucks off-load on the passenger side.

f) To determine the number of connections needed for off-loading tank cars, consult with Service Headquarters and consider minimizing tank car movements, tank car shipping schedules, conveyance turn-around times, local rail switching capabilities, and quantity of fuel needed for one day’s fuel supply.

g) Provide an electrical design that meets the minimum requirements of NFPA 70, NFPA 77, and NFPA 780. Treat combustible liquids under pressure as flammable liquids.

h) When authorized by Service Headquarters, protect the off-loading rack by a weather cover designed for severe weather conditions. The weather cover must be justified by severe environmental conditions impacting operations, low temperature, and snow or economically justified by reducing stormwater runoff and eliminating the need for stormwater collection and treatment. If the protective structure is included in the design, ensure that the underside of the roof is high enough to provide operator head room when walking on top of the truck or for access to rail car domes. Ensure structural design is in accordance with the Army Corps of Engineers Architectural and Engineering Instruction (AEI) and MIL-HDBK-1002/3.

i) Provide for egress and entrance of emergency response vehicles.

j) Provide a means of inbound filtration for all products. For aviation turbine fuels, this is normally a filter/separator, as described in Section 4 of this handbook. Provide two sets of horizontal filter/separators installed in parallel, each vessel designed to handle 150 percent of normal off-loading flow rate (in the 1200 gpm size, only vertical f/s may be available). Provide each vessel with a feature to automatically switch the fuel stream to the other vessel when

the differential pressure across the vessel reaches a preset limit. Require a warning signal to alert the operator that the switching operation has occurred. In cases of emergency, include the capability to bypass the inlet filter separator bank. For other types of fuels, the selection of filtration depends on anticipated impurities, the source of the fuel, and the shipping method. Consider the use of micronic filters, cyclonic filters, and haypack filters as possible filtration devices.

3.3.2.2 Off-Loading Drop Tanks. The introduction of air into a fuel receiving system poses extreme hazards which can result in fire and/or explosion. Hazards are compounded when an air/fuel mixture is passed through receipt filter/separators where static electricity is generated and ignition can occur. For facilities with the capability to off-load several tank trucks at once or where newer tank trucks with multiple hoses are connected to multiple isolated compartments, consider providing an underground, gravity-type, receiving tank with submersible transfer pumps and level controls. For smaller systems of one or two tank trucks, consider a low profile, aboveground, receiving tank with a centrifugal transfer pump. For either case, provide level sensors to control the flow. See Facility Plate No. 005.

3.3.2.3 Equipment Required

a) Where tank trucks or tank cars are off-loaded into aboveground tanks, provide centrifugal pumps configured to provide automatic air elimination as shown on Facility Plate No. 003. Provide one pump for each tank truck or tank car that is to be off-loaded simultaneously, at an average capacity of 300 gpm (19 L/s). Centerline height of suction line from manifold to pump should not exceed 23.25 inches (591 mm) above truck unloading, parked position. Where pumps are required, provide at least two pumps to allow continued operations if one is out of service. Where tank trucks or tank cars are off-loaded into underground tanks, pumps will not normally be required. When direct pump off-load of trucks is provided, the preferred pump location is at the off-load point, as opposed to a remote location.

b) Provide 4-inch (100 mm) diameter by 10-foot (3 m) long lightweight reinforced vacuum rated off-loading hoses and covered hose storage racks for each off-loading position.

Eliminate covered hose storage rack if off-load rack is to be covered. Ensure that all swivels are non-lubricated aluminum or stainless steel in-line repairable type. Consult with activity to verify the need for hoses. At some activities, the fuel hauling contractor provides the hoses.

c) Equip each tank truck off-loading position with an automatic, self-monitoring ground verification unit with a lockable bypass. If grounding is not verified and there is an off-loading pump dedicated to that position, ensure the unit prevents the pump from starting. If the pump is not dedicated, ensure an alarm sounds if the off-loading valve is opened prior to grounding verification. Include a separate grounding reel to accommodate vehicles without grounding equipment. (This unit is optional on Air Force projects. Contact the Service Headquarters.)

d) Provide fuel sampling connections for collecting test samples.

e) Provide pressure gauges on both sides of all strainers or a differential type gauge across the strainer. Where a strainer is upstream of a pump, the pump suction gauge may function as the strainer downstream gauge.

f) Provide a compound (pressure/vacuum) gauge on the inlet side of pumps and a pressure gauge on the outlet side of pumps.

g) If the system is for JP-5 or other fuel that does not have a static dissipater additive which provides a conductivity level greater than 50 conductivity units (50 picosiemens per meter), and a 30-second retention time is not provided between filter/separator and receiving tank, provide a relaxation tank downstream of filter/separator to ensure a combined 30-second retention time (time in the tank and time in the piping).

h) Provide basket strainers upstream of pumps, except positive displacement pumps.

i) Provide a combination flow control and non-surge check valve on all off-load pumps except positive displacement types. Provide flow control through a hydraulically operated

diaphragm control valve. If a bulk air eliminator with automatic air release head is included, provide block function with an electric (solenoid) switch.

j) Provide a positive displacement or turbine meter and meter proving connections. Provide a strainer on the upstream side of the meter.

k) On the off-loading riser, install a visual fuel flow indicator (maximum pressure 275 psi (1900 kPa) at 100 degrees F (38 degrees C), Seals Viton maximum temperature 350 degrees F (177 degrees C)). This will allow visual quality assurance and provide the operator with a backup system to shut off the pumps when off-loading is complete to prevent air build-up in the receipt lines.

3.4 DISPENSING FACILITIES. Fuel is normally dispensed from a bulk facility via an installation pipeline, interterminal pipeline, tank truck, or tank car.

3.4.1 Pipeline Pumping Facilities

3.4.1.1 General Criteria. As discussed in Section 6 of this handbook, pipelines are either interterminal pipelines or installation pipelines. Installation pipelines are commonly used to transfer fuel to an aircraft fueling facility or a marine dispensing facility. Interterminal pipelines are cross-country between installations. However, since pipeline pumping facilities are typically at a bulk fuel storage facility, they are covered in this section.

3.4.1.2 Equipment Required

a) Centrifugal pumps complying with API Std 610 with adequate head and capacity. Always provide one additional pump as back-up.

b) Turbine or positive displacement meter with proving connections. Consideration can also be given to alternative meter technologies such as ultrasonic meters. Compensate for fuel temperature at custody transfer point.

c) Provide fuel sampling connections for collecting test sample.

d) Pig launching and receiving capability for interterminal and installation pipelines.

e) Strainer on the upstream side of the meter.

f) Manual double seated plug valves where total isolation is required.

g) Pressure gauges on both sides of the strainer or a differential pressure type gauge across the strainer.

h) Compound (pressure/vacuum) gauges on the inlet side of pumps and pressure gauges on the outlet side of pumps.

i) Strainers upstream of pumps.

j) Non-surge check valve with rate of flow control on pump discharge.

3.4.2 Tank Truck and Tank Car Loading Facilities

3.4.2.1 General Criteria. This section applies to facilities required for loading over-the-road tank truck transports or rail tank cars used for the bulk transfer of fuel. A typical application is the transfer by tank truck from a storage terminal to secondary storage, such as a filling station or a heating plant. In many cases, the receiving and loading facilities are combined. In these cases, both receiving and loading facility requirements must be addressed. This section does not include facilities for loading aviation refuelers for direct issue to aircraft. This process requires special design considerations as discussed in Section 4 of this handbook. See Facility Plate Nos. 002 through 004.

a) Determine the volume of fuel and number of tank trucks or tank cars to be handled by an operational analysis with assistance from Service Headquarters.

b) Comply with NFPA 30 for separation between tanks, buildings, roads, and property lines; however, provide a minimum separation from any of these facilities of 50 feet (15 m). Assume that the property line is the fuel farm fence. Use the criteria for Class I liquids regardless of product and do not take a reduction for fixed fire protection. Do not

locate a tank truck loading facility closer than 100 feet (30 m) from a railroad track (or spur) or rail siding for loading/off-loading of fuel.

c) Bottom loading is the only acceptable method of loading tank trucks. Bottom loading results in increased safety, manpower savings, quality control of product, and area cleanliness. At non-U.S. locations where only contracted top loading tank trucks are available, install a top loading rack with permission of Service Headquarters. In this event, provide future bottom loading capabilities.

d) When authorized by Service Headquarters, protect the loading rack by a weather cover designed for severe weather conditions. The weather cover must be justified by severe environmental conditions impacting operations (low temperature and snow) or economically justified by reducing stormwater runoff and eliminating the need for stormwater collection and treatment. If the protective structure is included in the design, ensure that the underside of the roof is high enough to provide operator head room when walking on top of the truck and for access to rail car domes. Ensure structural design is in accordance with the Army Corps of Engineers AEI and MIL-HDBK-1002/3.

e) Provide separate piping, pumps, loading connections, and controls for each different type and grade of fuel.

f) Arrange loading rack with a row of islands with sufficient clearance between to allow easy access to all parts of the tank trucks when parked. Arrange islands and approaches in a manner that allows forward motion for all tank trucks at all times with ample room for turning. Space and arrange bottom loading islands to accommodate one tank truck only on the side adjacent to the tank truck’s liquid connections, usually the passenger side of the tank truck.

g) Provide for entrance and egress of emergency vehicles.

h) At each loading position, provide an impermeable retention and controlled drainage system leading to a containment or treatment system. Pave the spaces between islands, and on each side of the outer islands, with concrete

pitched a minimum of one percent toward catch basins or trench drains. Design containments to the most stringent of Federal, State, or local regulations. Provide containment with capacity equal to the larger of the volume of the largest tank truck or tank car compartment to be loaded or the runoff from a rainfall of intensity equal to a 5-year expectancy, 1-hour duration storm. Provide a normally closed valve on the drain system to allow for containment during fueling operations and which can be opened to drain the area when necessary. If a canopy, which is designed to preclude rain from the contained area, is installed, reduce the sizing for rainfall, accounting only for wind-blown rain. Consider combining the containment with other containments or treatment facilities on-site. However, take the level of contamination of each containment area into consideration. Do not use asphalt within a containment area.

i) If top loading is required for tank cars (normally only when commercial contract leaves no other choice) and approved by Service Headquarters, provide a typical tank car loading rack with an elevated steel platform, consisting of a walkway, 4 feet (1.2 m) wide, 10.5 feet (3.2 m) above the top of the rails, and the full length of six tank cars. Ensure that the centerline of the structure is 10.5 feet (3.2 m) above the centerline of the tracks. Equip the platform with a counterweighted or spring-loaded tilting bridge to connect to the tank car dome at each loading station. Design so that when released from the horizontal position, the bridge will automatically move and lock in an upright position away from any part of the tank car under all weather conditions. Refer to NAVFAC Drawing No. 1403989. Ensure conformance with MIL-HDBK-1002/1 and Army Corps of Engineers AEI requirements. Platform is not required on Air Force projects.

j) Pave with concrete or otherwise provide containment for an area extending from 5 feet (1.5 m) outside of each outer rail and extending longitudinally 15 feet (4.6 m) each way from the center of each loading position. Slope the paved area to a catchment or treatment facility as described previously in Item (h).

3.4.2.2 Tank Truck Fillstand Equipment Required

a) Provide a positive displacement or turbine meter for each tank truck/car fill connection. Protect each meter with an upstream strainer. Include temperature compensation if rack is to be point of custody transfer.

b) Provide fuel sampling connections for collecting test samples.

c) Provide pressure gauges on both sides of the strainer or a differential pressure type across the strainer.

d) Provide fusible link safety valves as the first piece of equipment (in the direction of the flow) on the loading position. (Valve is not required on Air Force projects.)

e) Provide hand-held deadman to control starting and stopping of loading fuel. Ensure deadman interlocks to system to prevent unattended loading of fuel. If electrical, use intrinsically safe type only.

f) Make provisions to start and stop the pumps for each fill position. Include pump status indicator light on control box.

g) Equip each fill position with a self-checking, automatic high-level shutoff system. Include an electronic ground detector connected to an electrically controlled block valve or pump so that the valve cannot remain open or the pump cannot operate if the tank truck compartment is full or the tank truck is not grounded. Ensure the system is compatible with both electronic and fiber optic sensors with manual-keyed bypass. (May require a parallel effort beyond the project scope to ensure that all trucks using the facility have compatible connections.) (This unit is optional on Air Force projects. Contact the Service Headquarters for guidance.)

h) Equip liquid connections to tank trucks for bottom loading with drybreak couplers in accordance with API RP 1004.

i) Refer to Section 2 of this handbook for guidelines on vapor collection and recovery or disposal systems.

j) Provide heaters and insulated, heated pipelines, as required, where viscous fuels are to be loaded to maintain the temperature of the fuel at its minimum pumping temperature.

k) Stainless steel or aluminum loading arms (pantograph, without hoses) equipped with non-lubricated swivels may be used instead of hoses, if approved by Service Headquarters. Ensure all swivels are non-lubricated aluminum or stainless steel in-line repairable type.

l) Provide meter proving connections, unless local procedure provides an alternative.

m) Provide a two-stage flow control valve with opening/closing speed control, pressure regulating, check, and flow control features. For Air Force projects, the control valve usually has an opening and closing speed control only, instead of the two-stage flow control.

n) Relaxation tank or piping configuration with sufficient capacity to retain the maximum flow of the loading station for 30 seconds from the time the fuel leaves the last piece of filtration equipment to the fuel reaching the loading nozzle. Applies only to JP-5 or other fuels which do not have a static dissipation additive that provides a conductivity level greater than 50 picosiemens.

o) Strainer.

p) Shutoff valves for servicing equipment.

q) Grounding/bonding reel (provided as an integral part of the high level shutoff system).

3.4.2.3 Tank Car Loading Station Equipment Required

a) Provide a positive displacement or turbine meter for each tank truck/car fill connection. Protect each meter with an upstream strainer. Include temperature compensation if rack is to be point of custody transfer.

b) Provide fuel sampling connections for collecting test samples.

c) Provide pressure gauges on both sides of the strainer or a differential pressure type across the strainer.

d) Provide fusible link safety valves as the first piece of equipment (in the direction of the flow) on the loading position. (Valve is not required on Air Force projects.)

e) Provide loading connections, controls, valves, etc., on one or both sides of the loading platform as specified by Service Headquarters. Load tank cars from the bottom using counterbalanced, articulated tank car loading assemblies.

f) Provide a portable liquid level sensor with adjustable height at each loading rack. Wire the sensor so that it plugs into a rack-mounted control unit that monitors the level of fuel in the tank and stops the flow of fuel to prevent an overfill. Provide capability to connect the ground verification rack to the rail tank car frame.

g) Provide a system to connect a self-checking electrical bond between the rack and the tank car. Ensure that all wiring from the fill control system and the ground control system is intrinsically safe and approved for use in hazardous locations. Ensure that loading valves are self-closing.

h) Provide a two-stage flow control valve with pressure regulating, check, and flow control features. For Air Force projects, the control valve usually has an opening and closing speed control instead of the two-stage flow control.

3.5 PIPING SYSTEMS. Refer to Section 9 of this handbook.

3.6 EQUIPMENT DESCRIPTIONS. The appropriate guide specification and/or standard design provides specific information for equipment selection. Make provisions to drain equipment for maintenance. Accomplish this with hard-piped drains only when the equipment holds more than 5 gallons (19 L) of fuel or when a pipe which drains to the product recovery tank is within 12 ft (3.7 m).

3.6.1 Bulk Air Eliminators. Use flange-connected, steel bodied bulk air eliminator of the desired pressure and flow rating for the applicable service requirement. Include an automatic air release head and interlock the equipment with a float or solenoid-operated hydraulically operated diaphragm control valve. Provide discharge piping to the product recovery system or other safe means of containment.

3.6.2 Meters - Positive Displacement. Require flange-connected, cast steel bodied positive displacement meters of the desired pressure and flow rating for the applicable service requirements. Ensure meter has temperature-compensation (if custody transfer), adjustable calibration, register and pre-set capabilities. Ensure meter accessories are compatible with either the mechanical or electronic support equipment selected. Provide an accuracy of plus or minus 0.5 percent when used for custody transfer. Consult the appropriate Service Headquarters for requirements for the meter to communicate to a remote location or equipment. Consider the use of a card-operated or key-operated data acquisition system. Refer to “Card and Key Locks” under “Controls” paragraph of this section.

3.6.3 Meters - Turbine. Use flange-connected, steel bodied turbine meters of the desired pressure and flow rating for the applicable service requirement. Ensure meter has temperature-compensation and adjustable calibration. Provide an accuracy of plus or minus 0.5 percent when used for custody transfer. Ensure all supporting equipment for meter is compatible with the turbine meter selected. Consult the appropriate Service Headquarters for requirements for the meter to communicate to a remote location or equipment. Consider the use of a card-operated or key-operated data acquisition system. Refer to “Card and Key Locks” under “Controls” paragraph of this section.

3.6.4 Meters - Orifice. Use this type of meter only where custody transfer or accounting/inventory control is not required. Provide with flange connections.

3.6.5 Pressure or Pressure/Vacuum Gauges. Use liquid-filled gauges of range and dial size, as necessary, but not less than 0 to 160 psig (0 to 1100 kPa) pressure range and 4-inch (100 mm) diameter dial. Gauges to be of all stainless steel construction, with black graduations on a white face.

For extreme temperature environments, consult Service Headquarters for direction on the possible use of air-filled gauges.

a) Consider the location, year-round weather conditions, and service requirements for the type of liquid filling to be used.

b) Gauge liquids and service ranges.

Liquid	Range
Glycerin	0 °F to 400 °F (-18 °C to 204 °C)
Silicone	-40 °F to 600 °F (-40 °C to 316 °C)

c) Provide a lever handle gauge cock and pressure snubber in each pressure gauge connection.

d) Provide indicating and recording pressure gauges on suction and discharge lines for interterminal pipeline pumping stations and on the incoming line at the delivery terminal of each such pipeline, if required by Service Headquarters.

3.6.6 Strainers

a) Use flanged strainers constructed of steel and fitted with removable baskets of fine Monel metal or stainless steel mesh with large mesh reinforcements. Provide quick opening, single screw type with drain connection in bottom.

b) Provide a fine screen mesh as follows:

	Mesh	Size of Opening
Pump suctions (Centrifugal)	7	0.108 inch (2.74 mm)
Pump suctions (Rotary)	40	0.016 inch (0.40 mm)
Meter inlets	40	0.016 inch (0.40 mm)

c) In all cases, ensure the effective screen area is not less than three times the cross sectional area of the pipe.

3.6.7 Surge Suppressors. Every effort should be made to control hydraulic surge or shock to acceptable limits by the design of the piping system rather than by the use of surge suppressors. Where this is not possible or becomes extremely impractical, a surge suppressor(s) may be incorporated. Use the diaphragm or bladder type equipped with a top-mounted liquid-filled pressure gauge, isolation valve, and drain. Locate surge suppressors as close as possible to the point of shutoff that is expected to cause the shock. Provide wafer check valve at the bottom with adjustable pin steps to permit controlled bleed back of the surge suppresser without rebounding.

3.6.8 Pumps

3.6.8.1 Design Requirements. Design pumps to deliver the full range of operating conditions anticipated at any facility with flow rates as presented in Section 2 of this handbook. Ensure pumps develop sufficient head to overcome the friction and static head losses in the system at the rated flow. Consider the specific gravity, temperature, viscosity, vapor pressure, corrosive, and solvent properties of the fuel. If a range is given for the specific gravity, etc., in par. 2.3, use the larger value for the purpose of calculations. For any single grade of fuel, connect pumps in parallel. Select according to the type most suitable for the particular application. Do not use positive displacement or reciprocating pumps for product issue or pipeline transfer. Provide enough pumps to allow the system to operate at full capacity with the largest pump out-of-service.

3.6.8.2 Centrifugal Pumps. Use API Std 610 centrifugal pumps to pump from aboveground tanks with continuously flooded suctions.

3.6.8.3 Vertical Turbine Pumps. Use API Std 610 vertical turbine pumps to pump from underground tanks. Do not use horizontal transfer pumps in a pit alongside the underground tank as an alternative.

3.6.8.4 Rotary Pumps. Use sliding vane positive displacement pumps or self-priming centrifugal pumps for applications such as stripping pipelines or similar service where the pump may frequently lose its prime. For these pumps, provide a pressure relief valve on the discharge side of the pumps. Use rotary pumps for pumping viscous liquids where there is no reliable heat source. Consider requiring a single-speed solid state starter with variable frequency drive for positive displacement pumps to gradually bring the pump to normal operating speed.

3.6.8.5 Drivers. Drive permanently installed pumps by an electric motor which is properly classified in accordance with NFPA 70. Size to be non-overloading at any point on the curve.

3.6.8.6 Materials of Construction. Use carbon steel or nodular iron casings and components. Refer to Section 4 of this handbook for aviation turbine fuels requirements.

3.6.8.7 Installation. Mount permanently installed pumps on substantial foundations of reinforced concrete designed in accordance with Hydraulic Institute Standards. Provide drain piping for pump and motor base, pump gland, or seal leakage and vent valve. When the pump is in a pump house or pump shelter, connect drains to an oil-water separator or waste tank with piping which includes a vertical liquid trap.

3.6.9 Valves

3.6.9.1 Materials of Construction - General. Use carbon steel bodies and bonnets on all valves except for aviation turbine fuels. Internally epoxy-coated valves are acceptable for general services but not as a substitute for a non-ferrous valve. Do not use aluminum valves within a contained area. Do not furnish nor install cast iron or bronze-bodied valves in liquid petroleum service.

3.6.9.2 Special Consideration for Aviation Turbine Fuels. Provide all valves in non-corrosive aviation turbine fuel systems with aluminum or stainless steel bodies and not with zinc, zinc-coated, copper, or copper bearing materials in contact with the fuel. Electroplated nickel is permitted for double seated plug valves and on nodular iron or cast steel hydraulically operated diaphragm control valves within the

tank dike area. Carbon steel valves are permitted, provided they are internally plated with chromium. Electroless nickel plating is also acceptable.

3.6.9.3 Types

a) Gate valves are not allowed on systems covered by this section.

b) Valves for quick or frequent opening may be one of the following:

(1) Ball valves designed so that if synthetic seating material is burned out in a fire exposure, a metal-to-metal seat will remain to affect closure and comply with API Std 607. Require synthetic seals or seating material to be of Teflon or viton. Where line pigging is required or if within ten pipe diameters upstream and/or five pipe diameters downstream of flow or pressure control valves or a flow sensing device such as a venturi, use full port ball valves. Valves should comply with API Std 608.

(2) High-performance wafer trunion (butterfly) valves. Use Teflon or viton synthetic seals or seating material. Design the valve so that if the synthetic seating material is burned out in a fire, a metal-to-metal seat will remain to affect closure. Use valves of high-performance type with eccentric disc shaft and clamping action for bubble-tight shutoff. Do not use these valves on Air Force projects. On other service projects, use only as operating valves and not where isolation or absolute closure is required, such as on tanks. Their use is discouraged outside of fillstands and aircraft direct fueling stations.

(3) Provide Teflon-sleeved nonlubricated plug valves.

c) Use check valves to prevent backflow through pumps, branch lines, meters, or other locations where runback or reverse flow must be avoided. Check valves may be of the swing disk, spring-loaded poppet, ball, or diaphragm-actuated types. Use swing checks of soft-seated non-slamming type with renewable seats and disks. Use diaphragm non-surge check

valves with flow control feature on the discharge of all centrifugal type pumps. Ensure check valves conform to the requirements of API Spec 6D.

d) Use double-seated, tapered lift, plug valves with an automatic body bleed between the seats (double block and bleed) for separation of product services, on tank shell connections, when piping goes below ground, between pier and tank storage, and other locations critical to pressure-testing of piping. Do not use lubricated plug valves. Include body cavity thermal pressure relief feature.

e) Provide at inlet to truck fill stand (Army and Navy projects only) fusible link valve high-performance wafer trunion (butterfly) fire-safe with coil spring and fusible link to release at 165 ☜F (74 ☜C).

3.6.9.4 Valve Operators. Manually operate valves not specified for remote, automatic, or emergency operation. Use geared operators for gate valves larger than 6 inches (150 mm). Use geared operators for ball and plug valves larger than 6 inches (150 mm). Gate, ball, and plug valves specified for remote, automatic, or emergency service may have electric motor operators, if approved by Service Headquarters. Consider the use of locking tabs on valves to allow padlock to be used to lock out the valves during maintenance.

3.6.9.5 Locations. Provide valves in piping systems to control flow and to permit isolation of equipment for maintenance or repair. Provide additional valves at locations necessary to conduct a valid hydrostatic test. Require manually operated valves, except where motor operators are specifically authorized by applicable standard drawings or technical specifications. As a minimum requirement, provide block valves at the following locations:

a) Where piping goes underground or comes aboveground and requires periodic pressure testing.

b) At all subsurface and aboveground piping connections to storage tanks.

c) On each branch line at the point of connection to the main product pipeline or header.

d) On the product pipeline or header just before the line leaves a pumping station.

e) On the suction side and discharge side of each pumping unit, except the suction side of vertical centrifugal pumps installed in underground tanks.

f) On the upstream and downstream side of each line blind at connections to cross country pipelines.

g) On the inlet and outlet connection of each line strainer, filter/separator, meter, automatic valve, and other equipment that requires periodic servicing. One inlet valve and one outlet valve may be used to isolate more than one piece of adjacent equipment which are connected in series.

h) On each main distribution pipeline immediately downstream of the branch connection to each existing or future operating storage facility served by the pipeline.

i) On the aboveground piping at each tank car or tank truck off-loading connection. This requirement does not apply to gravity off-loading lines unless block valves are specifically called for on applicable standard drawings.

j) On the aboveground piping at each tank car and tank truck loading connection.

k) At critical roadway, runway, and taxiway crossings, consider isolation valves on both sides of runway/taxiway to facilitate hydrostatic testing and isolation.

3.6.9.6 Valve Pits. Provide fiberglass or concrete pits with a rolling or hinged cover designed in accordance with the Air Force Standard Design AW 78-24-28 for all valves installed in non-traffic areas on underground fuel systems.

3.6.10 Hydraulically Operated Diaphragm Control Valves. Diaphragm-operated globe valves are used extensively in fueling systems as control valves. These valves consist of a main valve and a pilot control system. The main valve consists of a body, diaphragm, and cover and is operated by varying the amount of pressure above the diaphragm. Since the chamber above the diaphragm exposes a greater area of the

diaphragm to chamber pressure than the area of the disc exposed to line pressure, an equal pressure in the chamber and pipeline results in a greater force being applied to the top of the disc. This forces the disc against the seat, thus closing the valve. By selecting the proper pilot control system, these valves can be used in numerous ways to control flow, pressure, and level within fueling systems.

3.6.10.1 Open/Close Operation. This is the most basic function of hydraulically operated diaphragm control valves. The operation is accomplished by applying pressure above the diaphragm to close the valve and relieve that pressure to allow line pressure to open the valve. The pilot trim used to perform this operation is a three-way valve which can be controlled by a solenoid, hand, pressure, pressure differential, or a float.

3.6.10.2 Throttling. This is the other main method of controlling the hydraulically operated diaphragm control valve. In this case, the valve modulates to any degree of opening, in response to changes in the throttling control. The throttling control reacts to a pressure differential across the main valve or across an orifice plate to regulate the position of the disc in the main valve. For proper operation these valves should be installed with straight pipe on both sides of the valve. Ten pipe diameters on the upstream side and five diameters on the downstream side is sufficient.

3.6.10.3 Check Valve Function. This is a unique function of a control valve. In this case, the main valve outlet pressure is connected to the diaphragm cover. Therefore, if the downstream outlet pressure exceeds the inlet pressure (which normally holds the valve open), the valve will close and prevent backflow. Note: In order for the valve to close it must backflow, sometimes for a substantial amount of time. Consider putting a regular check valve in series with this valve in cases where this is a concern.

3.6.10.4 Two-Stage Flow Control Valves. Use flange-connected, two-stage flow control valve of the desired pressure and capable of slowing and stopping the flow delivered by connection to a preset device, in accordance with the applicable service requirements. Use a diaphragm-type with a high flow and a low flow pilot valve. Equip the high

flow pilot with an adjustable time delay relay arranged so that the high flow will not open for a period of 1 to 2 minutes after the start of flow and will stop the flow with a high flow, low flow sequence. On Air Force projects, use a diaphragm control valve which has only opening and closing speed control.

3.6.10.5 Remote Operations. Hydraulically operated diaphragm control valves can be operated remotely. This is accomplished by installing tubing from the point of pressure sensing to the valve or by using remote-controlled solenoids within the trim.

3.6.10.6 Materials of Construction. Use stainless steel or aluminum (in non-contained areas) pilot control valves and stainless steel tubing. Use bodies, bonnets, and covers made of aluminum, stainless steel, internally plated (chromium) cast steel, or internally plated (nickel) nodular iron. Provide viton or Buna-N diaphragm and disc ring. Enclose all electrical apparatus according to classification of the area in which they are installed. Provide a means to wire seal all adjustable pilots. Do not use aluminum valves and tubing within an area that may collect flammable or combustible liquids.

3.6.10.7 Applications. For fueling systems, use hydraulically operated diaphragm control valves in the following applications (also refer to specific sections for applications):

a) Water slug shutoff.

b) Rate of flow control.

c) Pressure reduction.

d) Pressure relief.

e) Liquid level control.

f) Non-surge check control.

g) Deadman control.

h) Electrical block control.

3.6.10.8 Combinations. A combination of these controls is also possible. A typical use of these controls is on a filter/separator for water slug shutoff and rate of flow control.

3.6.11 Thermometers. Provide thermometers in Burner Fuel No. 5 and No. 6 distribution piping systems at each loading and receiving point and on the inlet and outlet of each heater.

3.6.12 Fuel Hoses. Provide pressurized loading hoses and connections complying with API Bull 1529. Provide lightweight, flexible, non-pressurized off-loading hoses constructed of nitrile rubber, rigid polyvinyl chloride (PVC) helix, synthetic braiding, smooth bore, and corrugated outer diameter. Provide non-pressurized hoses with a 65 psi (450 kPa) rating at 72 degrees F (22 degrees C) and 27 in Hg (90 kPa) vacuum rating. Use sizes as required for design flow rates. For hose flanges and nipples, use carbon steel or brass, except at aviation turbine fuel issue points use brass, stainless steel, or aluminum where metal parts contact the fuel.

3.7 CONTROLS

3.7.1 Design Requirements. Automatic controls at any facility may include temperature, pressure, fuel level and pump controls, automatic flow controls, alarm and limit switches, motor- and pilot-operated valves, and remote system condition indicators. Other forms of automatic controls are remote meter indication, electronic access control, data logging, and application of computer techniques. Base the selection of advanced automation and telemetry systems on a study of the particular application with consideration of possible economic justification, operational, and security requirements.

3.7.2 Flow Controls. Where it is possible to achieve flow rates which exceed equipment ratings, provide an adjustable flow control valve on the outlet connection of each meter or filter/separator. Use a self-actuating hydraulically operated diaphragm control valve controlled by the pressure differential across an orifice or a venturi in the main line.

3.7.3 Pump Controls. Where necessary, provide remote-operated valves on storage tank inlet and outlet lines, suction and discharge of transfer pumps, and transfer lines at fuel piers and other locations. Operation of pump suction and discharge valves may be a part of the automatic sequence for the starting of a centrifugal pump and for shutting it down, remotely, locally, or by a protective shutdown device. Remote-operated valves can be either motor-operated or the solenoid pilot-type, hydraulically operated diaphragm control valves. Equip these valves with green and red (open and closed) indicating lights at their pushbutton control locations.

3.7.3.1 All Pumps. Provide the following controls:

a) A stop-lockout button at each remotely operated pump for maintenance operation.

b) Indicator lights at the control station to give positive indications both when a pump is operating and when it is not energized. Use the "push-to-test" type.

c) A signal light or alarm to indicate pump failure when a pump is controlled automatically.

d) Reduced voltage starting if required by electric utility supplier or in all cases for pump motors greater than 50 horsepower (37 kW) and all vertical pumps.

e) Emergency fuel shut-off (EFSO) buttons with lock-key reset at all pump locations and at the central supervisory control station.

3.7.3.2 Transfer Pumps. Transfer pumps are used to supply fuel to a tank truck loading facility, tank car loading facility, or transfer fuel from one place on the installation to another (e.g., bulk facility to ready issue tank). If these pumps exceed 150 horsepower (112 kW), comply with Paragraph 3.7.3.3 of this handbook. In addition to requirements in Paragraph 3.7.3.1 of this handbook, provide transfer pumps with push button start/stop stations. Where these pumps are used for truck and/or car loading, provide push button controls adjacent to the pumps and at each loading

station. Use programmable logic controllers (PLC) where multiple pumps supply header loading multiple trucks or cars to obtain desired flow rate to each loading station.

3.7.3.3 Pipeline Pumps. For pumps over 150 horsepower (112 kW), provide protective shutdown devices with alarm at central supervisory control station in the event of the following:

a) High pump case temperature due to blocked discharge.

b) Excessive pump vibration.

c) Mechanical seal or packing gland failure.

d) High discharge pressure or loss of discharge pressure.

e) Excessive motor vibration.

f) High motor winding temperature.

g) Electrical interlocks which will prevent starting a pump if certain key valve settings are not correct and which will cause a pump shutdown if a key valve setting is changed.

h) Loss of pump suction pressure.

i) High bearing temperature and/or loss of cooling water flow.

3.7.4 Temperature Controls. Provide temperature controls at all fuel oil heaters to control the outlet oil temperature within safe limits. Use controls in which each consists of a sensing element in the fuel outlet line which activates a thermostatic valve or switch in the heating medium supply connection to the heater. Use a self-actuating control valve that requires no external power for closure. Use a manually adjustable set point for each temperature variable over the desired temperature range. Provide a bypass around the control valve with a V-port globe or ball valve for manual operation.

3.7.5 Card and Key Locks. Consider the possible economic and operational advantages of using an electronic card or key system which permits 24-hour unmanned operation of the facility. These types of systems are comprised of a card/key reader which is located near the service pump. The reader is activated by a card or key and accumulates issues and customer data which is downloaded to a central computer on a periodic basis. Activities with capitalized fuel, that is petroleum product owned by Defense Logistics Agency (DLA)/DESC, are eligible for projects to install automated card/key lock systems. Activities with capitalized fuel report inventories of these products to DESC through a system called Fuel Automated System (FAS). Automated systems to control capitalized inventories must be able to interface with the FAS. These types of automated systems are managed under the automated fuel service station (AFSS) program by DESC. It should be noted that AFSS equipment is used to control issues of product and is not an automated tank gauging system. Further information on AFSS systems and funding programs may be obtained by contacting DESC-FE.

3.8 FUEL ADDITIVES. If directed by DESC, provide bulk storage facilities which store aviation turbine fuels with the equipment to inject fuel additives. This will require proportional injectors, storage of additives, and capability of recirculating tanks through piping with injectors. If the additives have a corrosive characteristic, construct the system, including storage tanks, tank appurtenances, pumps if required, piping and associated fittings, valves, and injector assemblies of stainless steel components. Additive injection is not normally performed at the installation level.

Section 4: AIRCRAFT FUELING FACILITIES

4.1 INTRODUCTION. This section provides guidance for the design of aircraft fueling facilities, including those components normally located within a typical compound. These components include pipeline receiving facilities, tank truck and tank car receiving facilities, refueler truck fill stands, aircraft direct fueling systems, and associated piping and equipment. Fuel storage tanks are discussed in Section 8 and piping systems in Section 9 of this handbook. Pipelines that transport fuel from offbase and pipelines between bulk tanks and operating storage tanks are discussed in Section 6 of this handbook.

4.1.1 Special Considerations. If fuel can be pumped directly from a tank to an aircraft, to an aircraft direct fueling system, or directly into a refueler truck, treat the tank as an operating storage tank in compliance with Section 8 of this handbook.

4.1.2 Function. Aircraft fueling facilities, as discussed in this section, are designed for ground fueling of fixed and rotary wing aircraft. Two methods are used for refueling aircraft: refueler trucks and direct fueling systems (e.g., hydrant system). The preferred method of fueling used at most Navy, Marine Corps, and Army small aircraft bases is by refueler trucks. For Air Force transport, tanker, cargo, bomber, and other large aircraft, the preferred method of fueling is by hydrant system where the aircraft are fueled on the apron in their parked positions. Where operational/mission requirements dictate a quick return to the air, small-frame aircraft, both fixed and rotary wing, are refueled with the engines running via direct fueling systems under a "gas and go" concept. Install direct fueling systems only when specifically authorized by Service Headquarters.

4.1.3 Aviation Turbine Fuels. The fuels covered in this section are JP-4, JP-5, JP-7, JP-8, JP-TS, Jet A, and Jet A-1. Because of the critical nature of the end use of the fuel, protection of fuel quality, dependability of the system, and safety are very important. Refer to Section 2 of this handbook for information on fuel properties.

4.1.4 Special Precautions for Aviation Turbine Fuel Quality. Take extra care to prevent the contamination of aviation turbine fuels by dirt, water, and other fuels. For additional information, refer to Section 2 of this handbook. Aircraft fueling system must be designed with capability to generate turbulent flow to flush sediment and condensed water from all piping systems. Refer to Section 9 of this handbook for fuel velocity criteria.

4.2 GENERAL REQUIREMENTS. Section 2, General Design Information, contains information on fueling facilities. Do not begin the design on any fueling system without first becoming completely familiar with Sections 2 and 9 of this handbook and with the airfield clearance requirements found in MIL-HDBK-1021/1.

4.3 RECEIVING FACILITIES. Fuel deliveries to a military aviation activity are normally made by tank truck, railroad tank car, barge, or pipeline. A secondary method of delivery is normally required. Service Headquarters, with concurrence from the DFSC, will determine the appropriate type of delivery method based on mission requirements and an economic analysis.

4.3.1 Pipeline Receiving Facilities

4.3.1.1 General Criteria. Petroleum fuels may be supplied to aviation turbine fuel storage tanks by interterminal or installation pipelines. Interterminal pipelines may be dedicated to serving the particular facility or may be commercial pipelines handling a number of types or grades of fuel for more than one user. Installation pipelines will normally be a pipe from the bulk facility to the aircraft fueling facility. Provide for separate receiving and distribution piping for each grade of aviation turbine fuel unless otherwise approved by Service Headquarters. Exercise extreme care to avoid designing a system that could create damaging surges in the pipeline created by quick closing valves.

4.3.1.2 Equipment Required

a) Provide pressure-regulating valves to reduce pipeline pressures to the design pressure of the facility’s piping and equipment. Provide a block valve at both the upstream and downstream side of each pressure-regulating

valve. Prior to designing any features into the system which might affect the flow from a pipeline, contact the operator of the pipeline to ascertain the current operating conditions, evaluate the use of regulating valves, conduct a surge analysis of the pipeline, and determine whether the use of regulating valves is appropriate.

b) Provide a meter at the receiving end of the line to measure quantities of fuel received. Turbine-type meters are commonly used for pipeline receipt. However, positive displacement meters are acceptable if available at the required flow rate. Consider the use of alternative meter technologies such as ultrasonic meters. Compensate for fuel temperature at the point of custody transfer. Provide a strainer on the upstream side of the meter and connections for proving the meter with a portable prover. A meter prover connection consists of a valve in the main pipeline with a tee on both the upstream and downstream sides of the valve. The branch of each of the tees has a valve and a hose connection. The master meter can be attached to the hose connections.

c) Provide a means for sampling each pipeline product at a breakout manifold.

d) Provide provisions for a contractor to bolt pig launchers and receivers to the system for pigging. Arrange pig receiving connections to avoid introducing pipeline sludge and sediment into the tanks. Pig launching and receiving connections are required for interterminal (cross-country) and installation (as described in Section 6 of this handbook) underground pipelines.

e) Provide an interface tank to receive mixed fuels at the beginning and ending of a shipment unless the commercial pipeline company can provide this service satisfactorily.

f) Provide a breakout tank only if pipeline flow cannot be stopped due to pipeline operational requirements. Provide valves to divert the flow of fuel from a receipt tank to the breakout tank in the event fuel transfer is blocked by a manual or automatic valve within the fuel facility system such that the fuel facility system would be overpressurized from transient surge or high pressure from deadheading a pipeline supply pump. Provide appropriate breakout tank

overfill alarms and alarm breakout operation so fuel facility operators can take necessary steps to stop pipeline flow. Provide means of transferring fuel out of breakout tank back to fuel systems after a breakout event. Conduct a thorough review with the pipeline operator and perform a transient surge analysis to determine if surge pressure reduction methods are required to avoid damage to the pipeline.

g) Provide a means of inbound filtration. This is normally a horizontal filter/separator.

4.3.1.3 Special In-Bound Filtration. Where fuel is transferred to the base fuel system operating tanks from barges or directly from the supplier (off base) by a pipeline which handles more than one product, pass the fuel through at least two filtrations. Align equipment to allow gross filtration before fine filtration, in the direction of flow. The initial filtration may be a prefilter or coalescer for removal of solids or water or both. Prefilters are normally used for solids removal. A micronic filter is normally used for removal of fine solids. A cyclonic filter is typically used if a gross amount of particulates is predicted to be present. Coalescers are normally used to remove moderate slugs of water from the fuel. A hay pack coalescer is used to remove large slugs of water. A two-stage coalescer is typically used to remove very fine particulates, as well as some water. The second filtration is by a horizontal filter/separator placed downstream of the pre-filter. It removes dirt and free water down to the very low levels required for aircraft operations. Where the pre-filters have removable elements such as the micronic filters, provide two sets of pre-filters in parallel. Provide two sets of horizontal filter/separators installed in parallel, each vessel designed to handle 150 percent of normal off-loading flow rate. Provide each vessel with a feature to automatically switch the fuel stream to the other vessel when the differential pressure across the vessel reaches a preset limit. Require a warning signal to alert the operator that the switching operation has occurred. In cases of emergency, include the capability to bypass the inlet filter separator bank. Avoid the use of water slug valves in pipeline in-bound filter/separator.

4.3.2 Tank Truck and Tank Car Off-Loading Facilities

4.3.2.1 General Criteria. Fuel system operating tanks may be supplied with fuel by tank truck or tank car or both. At facilities with pipeline or water transport as their principal supply source, provide tank truck or tank car deliveries as a secondary supply source. Tank truck deliveries are the most common method. However, special transportation considerations or changing circumstances may make the use of rail facilities desirable. Therefore, at an activity with railroad service, lay out a tank truck receiving facility so that the system can be easily and economically extended to the existing rail spur. See Facility Plate Nos. 002 through 004.

a) Do not locate tank truck or tank car receiving facilities closer than 50 feet (15 m) from buildings, aboveground storage tanks, overhead power lines, or public roads.

b) Provide an adequate number (minimum two) of positions to off-load the daily fuel requirements of the facility in an 8-hour period without causing detention or demurrage of delivery conveyances.

c) Provide separate off-loading connections for each type of fuel to be handled. To facilitate the use of tank trucks with multiple independent compartments, provide a hose manifold with a minimum of two connections per tank truck. A manifold with hose connections equal to the number of truck compartments is recommended for quick turnaround. If less than five connections are provided, leave a blind flange on the end of the manifold to accommodate additional connections.

d) At each off-loading position, provide an impermeable retention and controlled drainage system leading to a containment or treatment system. Pave the spaces between islands, and on each side of the outer islands, with concrete pitched a minimum of one percent toward catch basins or trench drains. Design containment in accordance with the most stringent of ICBO UBC 902, BOCA F2315, and state and local regulations. Provide containment with capacity equal to the larger of the volume of the largest tank truck or tank car compartment to be off-loaded or the runoff from a rainfall of intensity equal to a 5-year expectancy for a 1-hour duration. Provide a normally closed valve on the drain system to allow for containment during fueling operations and which can be opened to drain the area when necessary. This valve may be

motor-operated with the concurrence of Service Headquarters. Tank trucks can be as large as 10,000 gallons (38 000 L) in capacity and tank cars as large as 40,000 gallons (151 000 L). If a canopy, which is designed to preclude rain from the contained area, is installed, reduce the sizing for rainfall, accounting only for wind-blown rain. Consider combining the containment with other containments or treatment facilities onsite. However, take the level of contamination in each containment area into consideration. Do not use asphalt within a containment area.

e) For off-loading tank trucks, arrange the flow of traffic to permit continuous forward movement of trucks at all times. Commercial tank trucks off-load on the passenger side.

f) To determine the number of connections needed for off-loading tank cars, consult with Service Headquarters and consider tank car shipping schedules, conveyance turn-around times, local rail switching capabilities, and quantity of fuel needed for one day’s fuel supply.

g) Provide an electrical design that meets the minimum requirements of NFPA 70, NFPA 77, and NFPA 780. Treat combustible liquids under pressure as a flammable liquid.

h) When authorized by Service Headquarters, protect the off-loading rack by a weather cover designed for severe weather conditions. The weather cover must be justified by severe environmental conditions impacting operations (low temperature and snow) or economically justified by reducing stormwater runoff and eliminating the need for stormwater collection and treatment. If the protective structure is included in the design, ensure that the underside of the roof is high enough to provide operator head room when walking on top of the truck or for access to rail car domes. Ensure structural design is in accordance with MIL-HDBK-1002 series and the Army Corps of Engineers AEI or MIL-HDBK-1002/3.

i) Provide for egress and entrance of emergency response vehicles.

j) Provide in-bound filtrations. This is normally a horizontal filter/separator.

4.3.2.2 Off-Loading Drop Tanks. The introduction of air into a fuel receiving system poses extreme hazards which can result in fire and/or explosion. Hazards are compounded when an air/fuel mixture is passed through receipt filter/separators where static electricity is generated and ignition can occur. For facilities with the capability to off-load several tank trucks at once or where newer tank trucks with multiple hoses are connected to multiple isolated compartments, consider providing an underground, gravity-type, receiving tank with deepwell turbine transfer pumps and level controls. For smaller systems of one or two tank trucks, consider providing a low profile, aboveground, receiving tank with a centrifugal transfer pump. For either case, provide level sensors to control the transfer rate. See Facility Plate No. 005.

4.3.2.3 Equipment Required

a) Where tank trucks or tank cars are off-loaded into aboveground tanks, provide centrifugal pumps configured to provide automatic air elimination, one for each tank truck or tank car that is to be off-loaded simultaneously, at an average capacity of 300 gpm (19 L/s). Off-loading systems designed in accordance with NAVFAC Drawing No. 1404005, i.e., with a receiving vessel and variable rate pump flow control can off-load at rates up to 600 gpm. Where pumps are required, provide at least two pumps to allow continued operations if one is out of service. Where tank trucks or tank cars are off-loaded into underground tanks, pumps will not normally be required.

b) Provide 4-inch (100 mm) diameter by 10-foot (3 m) long lightweight reinforced vacuum rated off-loading hoses and covered hose storage racks for each off-loading position. Ensure that all swivels are non-lubricated aluminum or stainless steel in-line repairable type.

c) Equip each tank truck off-loading position with an automatic, self-monitoring ground verification unit with a lockable bypass. If grounding is not verified and there is an off-loading pump dedicated to that position, ensure the unit prevents the pump from starting. If the pump is not dedicated, ensure an alarm sounds if the off-loading valve is opened prior to grounding verification. Include a separate

grounding reel to accommodate vehicles without grounding equipment. (This unit is optional on Air Force projects. Contact the Service Headquarters for guidance.)

d) Provide fuel sampling connections at each position for each product line for collecting test samples.

e) Provide pressure gauges on both sides of the strainer or a differential type gauge across the strainer.

f) Provide a compound (pressure/vacuum) gauge on the inlet side of the pumps and a pressure gauge on the outlet side of pumps.

g) If system is for JP-5 or other fuel that does not have a static dissipation additive which provides a conductivity level greater than 50 picosiemens, and a 30-second retention time is not provided between filter/separator and receiving tank, provide a relaxation tank downstream of filter/separator to ensure a combined 30-second retention time (time in the tank and time in the piping).

h) Provide seven mesh (0.108 inch (2.74 mm) opening), quick opening, single screw, basket strainers upstream of pumps, except positive displacement types.

i) Provide hydraulically operated diaphragm combination flow control and non-surge check valves on all off-loading pumps, except positive displacement pumps.

j) Provide parallel dual horizontal filter/separators, complying with API Publ 1581, to filter fuel before it enters the storage tank.

4.4 DISPENSING FACILITIES

4.4.1 Refueler Truck Fill Stands. Mission and turn-around times will establish the number of fill positions, with two being the minimum. Service Headquarters can assist in determining the number. See Facility Plate Nos. 006 and 007 for general design guidance and also NAVFAC Drawing No. 1404004. Provide a separate loading system for each grade or type of fuel to be handled.

4.4.1.1 General Criteria

a) Locate the refueler loading facility as close as practical or permissible to the location of the aircraft to be fueled but not less than 75 feet (23 m) from the nearest aboveground storage tank, building (except pump house may be 50 feet (15 m)), overhead power line, or public road.

b) For aircraft direct fueling systems, the fuel supply piping to the refueler truck loading facility may be a non-ferrous spur or extension from that system. In this case, the filter/separator and fuel quality monitor (for JP-5 systems) are not required since they are provided as part of the aircraft direct fueling system. Where filtration is downstream of the pump house and the spur connects prior to the filtration equipment, a filtered lateral is required. Arrange fuel loading equipment on one or more concrete islands configured for refueling on one side only. Make the direction of traffic appropriate for the location of the loading connections on the refueler, located on the driver's side. When more than one island is required because of the volume or number of fuel grades to be handled, arrange them in a parallel fashion with approximately 15 feet (4.6 m) between adjacent sides. When more than one type of aviation turbine fuel is being issued through standard aircraft refueling nozzles, use selectivity rings to prevent loading the wrong fuel. Arrange the islands and approaches to allow forward motion for all trucks at all times with ample room for turning. Allow for egress and entrance of emergency response vehicles.

c) At each loading position, provide an impermeable retention and controlled drainage system leading to a containment or treatment system. Pave the spaces between islands, and on each side of the outer islands, with concrete pitched a minimum of one percent toward catch basins or trench drains. Design containments to the most stringent of Federal, State, or local regulations. Provide containment with capacity equal to the larger of the volume of the largest refueler to be loaded or the runoff from a rainfall of intensity equal to a 5-year expectancy for a 1-hour duration. Provide a normally closed valve in the drain system to allow for containment during fueling operations and which can be opened to drain the area when necessary. If a canopy, which is designed to preclude rain from the contained area, is installed, reduce the sizing for rainfall, accounting only for wind-blown rain. Consider combining the containment with

other containments or treatment facilities onsite. However, take the level of contamination in each containment area into consideration. Do not use asphalt within a containment area.

d) Load aircraft refueler trucks by bottom loading only. Top loading of any refueler truck is not permitted.

e) When authorized by Service Headquarters, protect the loading rack by a weather cover designed for severe weather conditions. The weather cover must be justified by severe environmental conditions impacting operations (low temperature and snow) or economically justified by reducing stormwater runoff and eliminating the need for stormwater collection and treatment. If the protective structure is included in the design, ensure the underside of the roof is high enough to provide operator head room when walking on top of the truck and for access to rail car domes. Ensure structural design is in accordance with the Army Corps of Engineers AEI and MIL-HDBK-1002/3.

f) Design all electrical systems and apparatus for use in Class I, Division 1, Group D hazardous areas in accordance with NFPA 70, regardless of the type of fuel dispensed.

4.4.1.2 Equipment Required. Provide separate piping, pumps, loading connections, and controls for each different type or grade of fuel. Provide an individual block valve for each fill connection. Include the following equipment in each refueler truck fill stand:

a) Self-closing emergency valve with 165 ☜F (74 ☜C) fusible link (except for Air Force projects).

b) Shutoff valves for servicing equipment.

c) Horizontal filter/separator conforming to API Publ 1581, unless fill stand is supplied from a direct fueling system via a non-ferrous branch connection downstream of the issue filter/separator.

d) Fuel quality monitor downstream of filter/separator (Navy and Army projects only). Include differential reading pressure gauge.

e) Positive displacement or turbine meter with rated capacity equal to the maximum flow of the loading station and the following accessories:

(1) If custody transfer point, a combination ticket printer and large numeral zero reset counter with self-closing weatherproof cover. Ticket printer not required on Army nor Air Force projects.

(2) Pulse transmitter of the photoelectric, high resolution type required for projects which employ electronic data acquisition systems.

(3) Temperature compensation if a custody transfer point.

f) Relaxation tank or piping configuration with sufficient capacity to retain the maximum flow of the loading station for 30 seconds from the time the fuel leaves the last piece of filtration equipment to the fuel reaching the loading nozzle. Applies only to JP-5 or other fuels which do not have a static dissipation additive that provides a conductivity level greater than 50 picosiemens per meter.

g) A hydraulically operated diaphragm control valve with the following functions (care must be taken to select equipment which is compatible with electronic or mechanical meter stacks):

(1) Adjustable rate of flow control if fill stand is on a branch line from a direct fueling system or other multiple pump arrangement which could result in issue exceeding 600 gpm (38 L/s).

(2) Adjustable time delay for opening speed control.

(3) Control valve to close in the event of diaphragm failure.

(4) Thermal pressure relief.

(5) Position indicator.

(6) Deadman control, electronic for Army, Navy, and Marine Corps. projects and hydraulic for Air Force projects.

(7) Compatibility with signal from electronic, self checking high-level shutoff device. (This unit is optional on Air Force projects. Contact the Service Headquarters for guidance.)

h) Mechanical loading arm. The preferred device is an aluminum or stainless steel counterbalanced mechanical loading arm. As an option, with the approval of Service Headquarters, use a loading hose approximately 10 feet (3 m) long, 3 or 4-inch (75 or 100 mm) nominal diameter, and meeting requirements of API. A spiral protective device (slinky) may be installed around the hose. House the hose in a covered hose tray to protect from ultraviolet damage. Install with a stainless steel in-line repairable swivel.

i) Dry-break fueling nozzle of size and type compatible with truck-loading connections (coded for product use, if more than one type of fuel is issued).

j) Non-lubricated aluminum or stainless steel inline repairable swivel if hose is used.

k) Sample outlet with a 3/8-inch (10 mm) diameter sample point with probe, ball valve, and quick disconnect at each position for each product line.

l) A self-monitoring, automatic, high-level shutoff system with a lockable bypass. Provide a single cable connection to the refueler, which incorporates overfill shutoff, bonding, grounding, deadman control, and grounding verification. (This unit is optional on Air Force projects. Contact the Service Headquarters for guidance.)

m) Low-intensity area lighting, in accordance with API RP 540, to permit full visibility of all equipment and controls during night operations.

n) Refer to Section 2 of this handbook for information on vapor collection and recovery or disposal systems.

o) On/off station for pumps, if pumps are dedicated to fill stand. Provide a light to indicate on/off status.

p) Emergency fuel shutoff stations. For fill stands with multiple positions, an emergency fuel shutoff station may not be required for each position. Design in such a manner that activation of the emergency stop will shutoff all fueling at that pump house.

q) Grounding reel (if bonding through an automatic high-level cutoff system is not provided).

r) Strainer with differential pressure gauge on a configuration where a filter/separator is not provided at the load rack.

s) Pressure gauge.

t) Maintenance drains.

u) Vents.

v) Surge arrestors (if required).

w) Meter-proving connections, unless local procedure provides an alternative.

4.4.2 Aircraft Direct Fueling Systems. Direct fueling systems are fuel systems that deliver fuel directly into an aircraft and require additional fueling hardware, such as a hydrant hose truck, pantograph, or hydrant hose cart. These may be hydrant systems for portable pantograph connections or hard pipe with fixed pantographs, which is usually the case for in-shelter fueling and hot fueling stations. While individual components may vary slightly between the various aircraft fueling systems, the basic philosophy followed by all the services is the same. The systems are configured in a loop with no dead ends. The loop is made up of the supply/return piping separated by a flushing/back-pressure control valve that maintains a constant pressure on the supply side piping and relieves excess fuel not taken on by the aircraft(s) into the return portion of the piping and back to the tank. The lead pump is turned on either automatically by a drop in the system pressure or manually by an on/off switch at each direct fueling station. A venturi in the supply

piping senses flow rate in the loop and works in conjunction with a venturi in the return loop. Depending on the flow demand, the return venturi turns on/off additional pumps as required. If return flow is below a preset limit (indicating that fuel is being dispensed), a low flow is sensed and additional pump(s) are turned on, one at a time, until a steady flow condition is reached. Conversely, if the return flow is above a preset limit (indicating less fuel is being dispensed), the return venturi senses high flow conditions and turns the pump(s) off, one at a time, until the system is brought to rest. The continued circulation of the fuel not only provides a self-cleaning action but when properly adjusted, the system is able to more closely match the varying fuel filling rates of aircraft. This provides smooth operation and eliminates surge pressure spikes that have been so destructive to aircraft fueling systems of the past. In order to ensure the highest quality of fuel, contact with bare carbon steel is limited to an absolute minimum prior to filtration and is not permitted downstream of the issue filter/separators, unless specifically authorized by Service Headquarters.

4.4.2.1 General Requirements. Install aircraft direct fueling systems only when specifically authorized by Service Headquarters. Service Headquarters or Air Force MAJCOMs assist in determining the number and type of stations required by the activity and with locating hydrant pits in aircraft parking ramps. Construct new facilities only for issuing aviation turbine fuels through pressurized single point and closed circuit fueling nozzles. Locate fueling stations at the edge of the aircraft parking apron or taxiways or at apron parking spots for large frame aircraft. Size and configure these systems based on the types of aircraft to be refueled, aircraft fuel capacity, and the number and types of aircraft to be simultaneously refueled. It is important to ensure a firm aircraft parking plan has been established before proceeding with the hydrant pit layout design. Some aircraft, such as fighters and some helicopters, may be refueled with engines or support equipment running. See Facility Plate Nos. 008 through 010. For additional guidance on Air Force projects, refer to AFH 32-1084.

4.4.2.2 Fixed-Wing Small-Frame Aircraft. Locate aircraft direct fueling stations for small-frame aircraft (carrier aircraft, patrol aircraft, fighter aircraft, and small

transports) along the edge of designated access ramps, aprons, or fueling lanes with easy access by aircraft and as close to their normal taxi routes as practical while still meeting centerline clearance requirements. Provide facilities for fueling aircraft with engines or support equipment running. These systems are installed where the mission dictates a continuing need for rapid turnaround without shutting engines down and are located to permit quick return to the runway. Configure taxi patterns to and from fueling stations to keep jet blast away from people. Refer to Standard Design AW 78-24-29 for Air Force projects and NAVFAC Drawing Nos. 1404000, 1404001, 1404002, and 1404003 for Navy projects. Use the following design criteria:

a) Outside of the limits prescribed for clear areas by MIL-HDBK-1021/2, TM 5-803-7, and AFMAN 32-1013, locate the equipment aboveground on a concrete slab adjacent to the edge of an access ramp, apron, or fueling lane. Ensure that the width of the slab and location of the equipment, including the pantograph when retracted, with respect to the ramp, apron, or fueling lane, does not interfere with any part of the aircraft on its approach to or departure from the fueling station. Equip Army and Navy hot fueling stations with an emergency dry breakaway coupling.

b) Limit the height of the equipment, including lighting, on the slab to no more than 36 inches (900 mm) above the elevation of the concrete pad.

c) Provide a nominal maximum flow rate for each direct fueling station of 600 gpm (38 L/s). However, design the system to deliver 400 gpm (25 L/s) with a nozzle pressure of 35 psig (240 kPa). Further design consideration is that the system must be capable of delivering 600 gpm (38 L/s) without damaging the pumps. (In general, systems designed to deliver 400 gpm at 35 psig have been shown to be fully capable of delivering 600 gpm with a nozzle pressure reading of 10 to 20 psig.) Actual fueling rates for small-frame aircraft range from 250 to 550 gpm (16 to 35 L/s). Since the actual flow rate will vary as the nozzle back pressure varies, it is necessary to limit the maximum nozzle pressure to 55 psig (380 kPa) at the skin of the aircraft to protect the aircraft. The issue venturi in a pantograph is a critical component of the direct fueling system and must be able to correctly simulate

nozzle pressure and compensate for all pressure losses up to and including the fueling nozzle. Use maximum rates and the number of required simultaneous refuelings for system sizing.

d) Design fueling systems for Air Force tactical aircraft and in-shelter systems in accordance with Standard Design AW 78-24-29, Type IV and Type V, respectively.

e) Provide at least two fueling stations, with the system sized for a minimum flow rate of 1,200 gpm (76 L/s). Where more than two fueling stations are required, increase the total system rate by 600 gpm (38 L/s) for every three additional fueling stations. Do not exceed 2,400 gpm (152 L/s) total capacity.

f) The Air Force has two standard direct fueling systems for fixed-wing small-frame aircraft. They are the Type IV and Type V systems.

(1) The Type IV fueling system, commonly called “hot pit refueling,” is similar to the Type III system except it is primarily used to refuel Air Force fighter aircraft with engines running along the apron, ramp, or in specially configured fueling areas. The most significant difference between it and the Type III system is the configuration of the loops. Refer to Standard Design AW 78-24-29 for Type IV hydrant systems.

(2) The Type V fueling system is commonly referred to as in-shelter refueling. It is similar to the Type IV system except that aircraft are refueled in shelters. This system has been primarily constructed in Europe and the Pacific although there are Type V systems in the CONUS. Refer to Standard Design AW 78-24-29 for Type V hydrant systems.

4.4.2.3 Large-Frame Aircraft. Locate aircraft direct fueling stations for large aircraft (transports, cargo planes, tankers, long-range patrol planes, and bombers) adjacent to their normal parking positions. Use the following design criteria:

a) Individually determine the number of fueling stations required for each activity. This depends on the number of large aircraft based at the activity or the number of aircraft that will need refueling as transients. To

accommodate the fueling of a number of aircraft within a given time span without moving them, more fueling stations are normally required than would actually be used at one time.

b) Provide a flow rate criteria for each fueling station of 600 gpm (38 L/s) or 1,200 gpm (76 L/s) at 45 psig (310 kPa) nozzle pressure. The selection of 600 gpm (38 L/s) or 1,200 gpm (76 L/s) is based on aircraft. Call MAJCOM for guidance. Size combined system requirements in multiples of 600 gpm (38 L/s), starting at a minimum flow rate of 1,200 gpm (76 L/s) up to a maximum flow rate of 2,400 gpm (152 L/s).

c) Design the piping, hydraulics, materials, and pumps in accordance with other paragraphs in this section.

d) Large aircraft such as transports and cargo planes can be fueled from flush-mounted hydrant pits (preferred method for Air Force projects). Flush-mounted hydrant pits are required to conform to Standard Design AW 78-24-28 for Type III hydrant systems. Pantographs can be used where normal aircraft parking positions can be located adjacent to edge of the ramp (fixed long-reach pantographs have a maximum reach of 135 feet (41 m)).

e) Use self-propelled hydrant hose trucks, Type III hydrant hose carts, or detachable pantograph assemblies to provide the connection from the flush-mounted hydrant pits to the aircraft and the necessary controls. Provide a hydrant control valve that is hydraulically actuated and operated.

f) Equip pantographs in accordance with Navy definitive drawings or Air Force standard designs. When incorporating the detachable pantograph into the design, follow USAFE/NATO specifications in which the swivels contain in-line repairable roller bearings. In addition, include the pantograph(s) as part of the construction project. Normally, the number of pantographs required equals the number of simultaneous refuelings to be performed.

g) The Air Force large-frame aircraft direct fueling system is referred to as a Type III pressurized fueling system. The Type III fueling system, or the constant pressure system, is the standard hydrant fueling system for large-frame aircraft. It is comprised of two operating storage tanks, a pumphouse, a hydrant loop, and hydrants at each parking

position. The system is controlled by two redundant PLCs and is constantly pressurized when in operation. Fuel is pumped from the tanks, through filter separators and a supply venturi into the hydrant loop. It flows through the appropriate hydrant valve, through a hydrant servicing vehicle or mobile pantograph, into the aircraft if refueling is underway. A backpressure control valve keeps system pressure at a pre-set level and a return venturi measures flow back to the storage tank. Working in conjunction with the return venturi, pumps are turned on and off depending on refueling requirements. This system is sized in 600 gpm (38 L/s) increments up to 2,400 gpm (152 L/s). Issue pumps are sized to provide a minimum of 100 psi (690 kPa) at the outlet of the most distant hydrant adapter. Each hydrant pit control valve is equipped with a pressure control and surge shutdown pilot. These pilot controls are set at 45 psig (310 kPa) and 50 psig (345 kPa), respectively. The hydrant control valves allow flow rates up to 600 gpm (38 L/s) using a 4-inch valve and flow rates up to 1200 gpm (76 L/s) using a 6-inch valve. Contact Service Headquarters for specific guidance and sizing of the hydrant control valve. Refer to Standard Design AW 78-24-28 for Type III hydrant systems.

4.4.2.4 Helicopters. Use the following design criteria for direct fueling systems for helicopters:

a) Design piping, pumps, controls, accessories, and auxiliary systems in accordance with other applicable paragraphs of this section. For each direct fueling station, provide a nominal maximum flow of 300 gpm (19 L/s). Design system to be capable of delivering 275 gpm (17 L/s) at 35 psig (240 kPa) nozzle pressure. Make the minimum size system 600 gpm (38 L/s) with at least two fueling stations. For diversity usage, increase by 300 gpm (19 L/s) for every three additional fueling stations. At outlying fields and with Service Headquarters’ approval, a single fueling station may be used.

b) Provide aboveground direct fueling stations equipped identical to fixed-wing small-frame aircraft fueling stations. Design the horizontal position and vertical projection of fueling equipment to avoid interference with the helicopters' blades when in the drooped attitude.

c) Coordinate type of pressure nozzle with user.

4.4.2.5 Surface-Effect Hovercraft. Turbine-powered, surface-effect hovercraft can be fueled on the parking apron with aircraft direct fueling systems. Use 200 gpm (13 L/s) maximum fueling rate at 30 psig (207 kPa) nozzle pressure. The fueling hardware components are similar to those required for aircraft direct fueling with JP-5, except the fuel contamination monitor may be omitted. Orient fueling stations so that the blast generated from the turbine engine does not damage the direct fueling station components.

4.5 READY-ISSUE (OPERATING STORAGE) TANKS. Refer to Section 8 of this handbook for information and guidelines regarding operating storage tanks.

4.6 PIPING SYSTEMS. Refer to Section 9 of this handbook.

4.7 EQUIPMENT DESCRIPTIONS. The appropriate guide specifications and/or standard design will provide specific information for equipment selection. Make provisions to drain equipment for maintenance. Provide hard piped drains when the equipment holds more than 5 gallons (19 L) of fuel or when a pipe which drains to the product recovery tank is within 12 feet (3.7 m).

4.7.1 Fuel Hoses. Ensure pressure hose connections between the transfer piping and tank cars, trucks, and vessels conform to API Bull 1529. Use sizes as required for design flow rates. For hose flanges and nipples, use carbon steel, except at aviation turbine fuel issue points, use brass, stainless steel, or aluminum where metal parts contact the fuel.

4.7.2 Meters

4.7.2.1 Positive Displacement. Use flange-connected, cast steel bodied (except aluminum or stainless steel if after the issue filter/separator) positive displacement meters of the desired pressure and flow rating for the applicable service requirements. Ensure meter has temperature-compensation, adjustable calibration, register and pre-set capabilities. Ensure meter accessories are compatible with either the mechanical or electronic support equipment selected. Provide an accuracy of plus or minus 0.5 percent when used for custody transfer. Consult the appropriate Service Headquarters for

requirements for the meter to communicate to a remote location or equipment. Consider the use of a card-operated or key-operated data acquisition system. Cards or keys, as appropriate, are coded to identify the receiver of the fuel and to allow access to the fuel. The quantities taken are transmitted to a data-receiving device by electronic pulse transmitters mounted on each meter, and each transaction is automatically recorded.

4.7.2.2 Turbine. Use flange-connected, stainless steel-bodied turbine meters of the desired pressure and flow rating for the applicable service requirement. Ensure meter has temperature-compensation and adjustable calibration. Ensure all supporting equipment for meter is compatible with the turbine meter selected. Provide an accuracy of plus or minus 0.5 percent when used for custody transfer. Consult the appropriate Service Headquarters for requirements for the meter to communicate to a remote location or equipment. Consider the use of a card-operated or key-operated data acquisition system. Cards or keys, as appropriate, are coded to identify the receiver of the fuel and to allow access to the fuel. The quantities taken are transmitted to a data-receiving device by electronic pulse transmitters mounted on each meter, and each transaction is automatically recorded.

4.7.3 Pressure Gauges. Use liquid-filled gauges of range and dial size, as necessary, but not less than 0 to 160 pounds per square inch (0 to 1100 kPa) pressure range and 4-inch (100 mm) diameter dial. Gauges to be of all stainless steel construction, with black graduations on a white face. For locations where the temperature exceeds 100 degrees F (38 degrees C), consult Service Headquarters for direction on the possible use of gas-filled gauges.

a) Consider the location, year-round weather conditions, and service requirements for the type of liquid filling to be used.

b) Gauge liquids and service ranges:

Liquid	Range
Glycerin	0 °F to 400 °F (-18 °C to 204 °C)
Silicone	-40 °F to 600 °F (-40 °C to 316 °C)

c) Provide a lever handle gauge cock and pressure snubber in each pressure gauge connection.

d) Provide indicating and recording pressure gauges on suction and discharge lines for interterminal pipeline pumping stations and on the incoming line at the delivery terminal of each such pipeline.

4.7.4 Strainers. Require a strainer to protect centrifugal pumps, unless it precludes meeting the net positive suction head of the pump. Whether or not strainers are installed on the suction side of centrifugal pumps, require a spool piece so that temporary strainers can be installed during startup of the system. Strainers are required on the suction side of all positive displacement pumps and meters. Strainers are not required upstream of filter/separators or hydraulically operated diaphragm control valves, except upstream of filter/separators which are upstream of operating storage tanks. Also:

a) Use flanged strainers constructed of steel and fitted with removable baskets of fine Monel metal or stainless steel mesh with large mesh reinforcements.

b) Provide a fine screen mesh as follows:

	Mesh	Size of Opening
Pump suctions (Centrifugal)	7	0.108 inch (2.74 mm)
Pump suctions (Rotary)	40	0.016 inch (0.40 mm)
Meter inlets (unless downstream of a filter/separator in issue facility)	40	0.016 inch (0.40 mm)

c) In all cases, ensure the effective screen area is not less than three times the cross sectional area of the pipe.

4.7.5 Surge Suppressors. Every effort should be made to control hydraulic surge or shock to acceptable limits by the design of the piping system rather than by the use of surge suppressors. Life cycle cost analysis which might lead to smaller sized pipe with surge arrestors is discouraged. Where this is not possible or becomes extremely impractical, a surge suppressor(s) may be incorporated. Use the diaphragm or bladder type equipped with a top-mounted liquid-filled pressure gauge, isolation valve, and drain. Locate surge suppressors as close as possible to the point of shutoff that is expected to cause the shock. Provide a check valve at the bottom with a weep hole in the clapper.

4.7.6 Filter/Separators. The common aviation turbine fuel contaminants are water, solids, surfactants, micro-organisms, and miscellaneous contaminants. Solid contaminants are generally those which are insoluble in fuel, most common are iron rust, scale, sand, and dirt. However, metal particles, dust, lint from filter material and rags, gasket pieces, and even sludge produced by bacterial action are included. The maximum amount and size of solids that an aircraft can tolerate vary by aircraft type and fuel system. Close tolerance mechanisms in turbine engines can be damaged by particles as small as 1/20th the diameter of a human hair. Filter/separators continually remove dirt and free water from aviation turbine fuels. Ensure that the design requires two separate filtrations prior to the fuel reaching the aircraft.

4.7.6.1 Design Requirements. All aviation turbine fuels pumped into an operating tank must pass through a filter/separator. Provide a horizontal filter/separator on the discharge line from the operating storage tank. Filter/separators are required for all aviation turbine fuel systems in facilities where the fuel is dispensed directly to aircraft or is loaded on refuelers that eventually dispense the fuel to aircraft. As a minimum for such facilities, provide horizontal filter/separators as follows:

a) Design and construct horizontal filter/separators in accordance with API Pub 1581.

(1) Class A - Use at points where fuel is received from barges, tankers, pipeline, rails, and trucks. At these points, the fuel will be expected to have higher levels of dirt and water. Consider the use of cyclonic separators or pre-filters (micronic filters) upstream of the filter/separator. (Note: API 1581, Filter/Separators in the 1,200 gpm range may only be available in the vertical configuration.)

(2) Class B - Use in the refueler supply piping, truck receipt piping, supply piping to fuel hydrant systems, and in operating tanks.

b) Design and construct horizontal filter/separators in accordance with the American Society of Mechanical Engineers (ASME) Code for Unfired Pressure Vessels. Construct metal parts which will be in contact with the fuel, including the shell, head, and internal attachments of 3003 or 5083 aluminum alloy. (The Air Force also allows interior epoxy-coated carbon steel.) Include the following accessories:

(1) Piston-type differential pressure gauge with 1 psi (5 kPa) graduations across the elements.

(2) Sight glass on the water sump.

(3) Hydraulically operated diaphragm control valve in the main discharge piping with rate of flow and water slug features. Include a manual check mechanism external to the filter/separator to check the float. (The water slug

feature must not be included on pipeline and barge receipt lines. In those cases, use a differential pressure alarm and a differential pressure-actuated bypass valve.)

(4) Only at barge-receiving locations or where large quantities of water are expected, automatic water drain valve connected to the bottom of the water sump. Automatic water drain valves are permitted on API Publ 1581 Class A applications only.

(5) Manual water drain valve from the bottom of the water sump.

(6) Pressure-relief valve.

(7) Automatic air release with check valve.

(8) Strainers upstream of filter/separators when the filter/separator is upstream of operating storage tanks.

(9) Connect automatic water drains, manual drains, pressure-relief valves, and air releases to a permanently installed fuel recovery system.

(10) Visual sight gauges (sight flow indicators) on drain piping and pressure relief valve where there is closed piping.

(11) Fuel sample points upstream and downstream.

c) Provide a means to slow-fill the vessel. This is necessary to avoid static buildup during the filling of the filter/separator. Standard Design AW 78-24-28 gives details for this design feature.

4.7.6.2 Arrangement. Arrange the system piping so that fuel from the discharge side of the fueling system transfer pumps can be recirculated back through the inlet filter/separators into the operating storage tank. Inlet filter/separators may serve more than one operating storage tank. In aircraft direct fueling systems on the downstream side of operating storage tanks, arrange the piping so that the fuel can be circulated from the operating storage tanks, through the filter/separators, to each aircraft fixed fueling station and back through the inlet filter/separators to the operating

storage tanks. Provide dispensing filter/separators of the same number and capacity as the transfer pumps; that is, for three 600 gpm (38 L/s) pumps, provide three 600 gpm (38 L/s) filter/separators.

4.7.7 Fuel Quality Monitors. The primary purpose of fuel quality monitors is to detect water that bypasses the filter/separator and provide an indication that the filter/separator is not working correctly. Fuel quality monitors will detect the presence of free water in the fuel and positively shut off the flow if the level of water is unacceptable. Fuel quality monitors absorb and retain free and emulsified water without being affected by surfactants or additives in the fuel and serve to filter particulate matter. As the fuel quality monitor senses that the fuel has unacceptable levels of water, the monitor will absorb the water. As water absorption continues the absorbent material swells, causing the pressure drop across the vessel to gradually increase until the flow is finally stopped. Provide cartridge-type fuel quality monitors immediately downstream of all issue filter/separators in JP-5 systems. In JP-8 systems, use only where directed by Service Headquarters.

4.7.8 Pumps

4.7.8.1 Design Requirements. Design pumps to deliver the full range of operating conditions anticipated at any facility with flow rates as presented in this section. Ensure pumps develop sufficient head to overcome the friction and static head losses in the system at the rated flow. Consider the specific gravity, temperature, viscosity, vapor pressure, corrosive, and solvent properties of the fuel. Provide at least two pumps for each aviation turbine fueling system. For any single grade of fuel, connect pumps in parallel. Select according to the type most suitable for the particular application. Do not use positive displacement or reciprocating pumps for product issue or pipeline transfer. Provide separate pumps for each type of aviation turbine fuel. Provide at least two transfer pumps, each capable of delivering the required system capacity.

4.7.8.2 Centrifugal Pumps. Use API Std 610 centrifugal pumps to pump from aboveground tanks with continuously flooded suctions.

4.7.8.3 Vertical Turbine Pumps. Use API Std 610 vertical turbine pumps to pump from underground tanks. Do not use horizontal transfer pumps in a pit alongside the underground tank.

4.7.8.4 Rotary Pumps. Use sliding vane positive displacement pumps or self-priming centrifugal pumps for applications such as stripping pipelines or similar service where the pump may frequently lose its prime. For these pumps, provide a pressure relief valve located on the discharge side of the pumps. Note: These are considered safety relief valves, not operating valves. Use of the relief valve to modulate the pump output voids the pump warranty. A variable speed motor can be used on positive displacement pumps to gradually bring the pump to normal operating speed.

4.7.8.5 Drivers. Drive permanently installed pumps by an electric motor which is properly classified in accordance with NFPA 70. Drivers should be sized to be non-overloading at any point on the curve.

4.7.8.6 Materials of Construction. For aviation turbine fuels, require cast steel or nodular iron casings and stainless steel impellers and trim.

4.7.8.7 Installation. Mount permanently installed pumps on substantial foundations of reinforced concrete, designed in accordance with Hydraulic Institute Standards. Provide drain piping for pump and motor base, pump seal leakage, and vent valve. When the pump is in a pump house or pump shelter, connect drains to an oil-water separator or waste tank with piping which includes a vertical liquid trap.

4.7.9 Valves

4.7.9.1 Materials of Construction. Require all valves in aviation turbine fuel systems to be aluminum or stainless steel bodies and do not allow zinc, zinc-coated, copper, or copper bearing materials in contact with the fuel. Allow only corrosion resistant valves such as aluminum or stainless steel for aviation turbine fueling systems between the operating tank outlet and the last fuel discharge point, the return lines, circulating lines, or filter/separators. Electroplated nickel is permitted for double-block and bleed valves and on nodular iron hydraulically operated diaphragm control valves

within the tank dike area. Carbon steel valves are permitted, provided they are internally plated with chromium. Electroless nickel plating is also acceptable. Internally epoxy-coated valves are acceptable for general services but do not use as a substitute for a non-ferrous valve. Do not use aluminum valves within a diked area. Do not furnish nor install cast iron or bronze-bodied valves in liquid petroleum service. Use only API fire-safe valves for fuel service.

4.7.9.2 Types

a) Gate valves are not allowed on systems covered by this section.

b) Valves for quick or frequent opening may be one with the following types:

(1) Ball valves designed so that if the synthetic seating material is burned out in a fire, a metal-to-metal seat will remain to affect closure and comply with API Std 607. Where line pigging is required or if within ten pipe diameters upstream and/or five pipe diameters downstream of a flow control valve, pressure control valve, or a flow-sensing device such as a venturi, use full port ball valves. Valves should comply with API Std 608.

(2) High-performance wafer trunion valves (butterfly). Use Teflon or viton synthetic seals or seating material. Require valves that are designed so that if the synthetic seating material is burned out in a fire, a metal-to-metal seat will remain to affect closure. Use valves of high-performance type with eccentric disc shaft and clamping action for bubble-tight shutoff. Do not use these valves on Air Force projects. On projects for other services, use only as operating valves and not where isolation or absolute closure is required, such as on tanks. Their use is discouraged outside of aircraft direct fueling stations and fill stands with fusible links.

c) Use check valves to prevent backflow through branch lines, meters, or other locations where runback or reverse flow must be avoided. Check valves may be of the swing disk, spring-loaded poppet, ball, or diaphragm-actuated types. Use swing checks of soft-seated non-slamming type with

renewable seats and disks. Ensure check valves conform to API Spec 6D. Use diaphragm non-surge check valves with flow control feature on the discharge of all pumps.

d) Use double-seated, tapered lift, plug valves with an automatic body bleed between the seats (double block and bleed) for separation of product services, on tank shell connections, when piping goes above or below ground, between pier and tank storage, and other locations critical to pressure-testing of piping. Do not use lubricated plug valves.

e) At inlet to truck fill stand and on supply and return risers at aircraft direct fueling stations (Army and Navy projects only), provide fusible link valve high-performance wafer trunion (butterfly) fire-safe with coil spring. Use fusible link set to release at 165 ☜F (74 ☜C).

4.7.9.3 Valve Operators. Provide manually operated valves not specified for remote, automatic, or emergency operation. Use geared operators for ball and plug valves larger than 6 inches (150 mm). Ball and plug valves specified for remote, automatic, or emergency service may have electric motor operators, if approved by Service Headquarters. Provide locking tabs on valves to allow padlock to be used for lock-out during maintenance.

4.7.9.4 Locations. Provide valves in product piping systems to control flow and to permit isolation of equipment for maintenance or repair. Provide additional valves at required locations necessary to conduct a valid hydrostatic test. Provide manually operated valves, except where motor operators are specifically authorized by applicable standard drawings or technical specifications. As a minimum requirement, provide block valves at the following locations:

a) Provide double block and bleed valves where piping goes below/aboveground and requires periodic pressure testing.

b) At all subsurface and aboveground piping connections to storage tanks.

c) On each branch line at the point of connection to the main product pipeline or header.

d) On the product pipeline or header just before the line leaves a pumping station.

e) On the suction side and discharge side of each pumping unit, except the suction side of vertical centrifugal pumps installed in underground tanks.

f) At all aircraft fuel dispensing points.

g) On the inlet and outlet connection of each line strainer, filter/separator, meter, automatic valve, and other equipment that requires periodic servicing. One inlet valve and one outlet valve may be used to isolate more than one piece of adjacent equipment which are connected in series.

h) On the aboveground piping at each tank car or tank truck off-loading connection. This requirement does not apply to gravity off-loading lines unless block valves are specifically called for on applicable drawings.

i) On the aboveground piping at each refueler loading connection.

j) At critical points where pipes cross runways, roads, and taxiways.

4.7.9.5 Valve Pits. Provide fiberglass or concrete pits with a rolling or hinged cover designed in accordance with the Air Force Standard Design AW 78-24-28 for all valves installed in non-traffic areas on underground fuel systems.

4.7.10 Hydraulically Operated Diaphragm Control Valves. Diaphragm-operated globe valves are used extensively in fueling systems as control valves. These valves consist of a main valve and a pilot control system. The valve is operated by varying the amount of pressure above the diaphragm. Since the chamber above the diaphragm exposes a greater area of the diaphragm to chamber pressure than the area of the disc exposed to line pressure, an equal pressure in the chamber and pipeline results in a greater force being applied to the top of the disc. This forces the disc against the seat, thus closing the valve. By selecting the proper pilot control system, these valves can be used in numerous ways to control flow, pressure, and level within fueling systems.

4.7.10.1 Open/Close Operation. This is the most basic function of hydraulically operated diaphragm control valves. The operation is accomplished by applying pressure above the diaphragm to close the valve and relieve that pressure to allow line pressure to open the valve. The pilot trim used to perform this operation is a three-way valve which can be controlled by a solenoid, hand, pressure, pressure differential, or a float.

4.7.10.2 Throttling. This is the other main method of controlling the hydraulically operated diaphragm control valve. In this case, the valve modulates to any degree of opening, in response to changes in the throttling control. The throttling control reacts to a pressure differential across the main valve or across an orifice plate to regulate the position of the disc in the main valve. For proper operation these valves should be installed with straight pipe on both sides of the valve. Ten pipe diameters on the upstream side and five diameters on the downstream side is sufficient.

4.7.10.3 Check Valve Function. This is a unique function of a control valve. In this case, the main valve outlet pressure is connected to the diaphragm cover. Therefore, if the downstream outlet pressure exceeds the inlet pressure (which normally holds the valve open), the valve will close and prevent backflow. Note: In order for the valve to close, it must backflow, sometimes for a substantial amount of time. Consider putting a regular check valve in series with this valve in cases where this is a concern.

4.7.10.4 Remote Operations. Hydraulically operated diaphragm control valves can be operated remotely. This is accomplished by installing tubing from the point of pressure sensing to the valve or by using remote-controlled solenoids within the trim.

4.7.10.5 Materials of Construction. Use stainless steel or aluminum (in non-contained areas) pilots and stainless steel tubing. Use bodies, bonnets, and covers made of aluminum, stainless steel, or internally plated (chromium or nickel) cast steel. Provide viton or Buna-N diaphragm and disc ring. Enclose all electrical apparatus according to classification of the area in which they are installed. Provide a means to wire seal all adjustable pilots. Do not use aluminum valves within a contained area.

4.7.10.6 Applications. For fueling systems, use hydraulically operated diaphragm control valves in the following applications (also refer to specific sections for applications):

a) Water slug shutoff.

b) Rate of flow control.

c) Pressure reduction.

d) Pressure relief.

e) Liquid level control.

f) Non-surge check control.

g) Deadman control.

h) Electrical block control.

4.7.10.7 Combinations. A combination of these controls is also possible. A typical use of these controls is on a filter/separator for water slug shutoff and rate of flow control.

4.8 CONTROLS

4.8.1 Design Requirements. Automatic controls at any facility may include temperature, pressure, fuel level and pump controls, automatic flow controls, alarm and limit switches, motor- and pilot-operated valves, and remote system condition indicators. Other forms of automatic controls are remote meter indication, electronic access control, data logging, and application of computer techniques. Base the selection of advanced automation and telemetry systems on a study of the particular application with consideration of possible economic justification, operational, and security requirements.

4.8.2 Flow Controls. Where it is possible to achieve flow rates which exceed equipment ratings, provide an adjustable flow control valve on the outlet connection of each meter or filter/separator. Use a self-actuating hydraulically operated diaphragm control valve controlled by the pressure

differential across an orifice plate in the valve or a venturi in the main line. Where necessary, provide remote-operated valves on storage tank inlet and outlet lines, suction and discharge of transfer pumps, and transfer lines at fuel piers and other locations.

4.8.3 Pump Controls. Operation of pump suction and discharge valves may be a part of the automatic sequence for the starting of a centrifugal pump and for shutting it down, remotely, locally, or by a protective shutdown device. Remote-operated valves can be either motor-operated or the solenoid pilot-type, hydraulically operated diaphragm control valves. Equip these valves with green and red (open and closed) indicating lights at their pushbutton control locations. Consider the use of PLCs on more complicated systems.

4.8.3.1 Transfer Pumps. Parallel transfer pumps supplying an issuing facility with varying demand flow rates must be sequenced automatically by flow-sensing sequence equipment. Lead pumps can be started by a pushbutton at an issuing facility, or automatically by a pressure switch actuated by a decrease in system pressure as might be caused by opening a valve at the issuing facility. This method requires the system to be pressurized at all times and is normally incorporated in the Type III hydrant system design. Incorporate the following control features:

a) Automatically controlled pumps with emergency stop buttons with lock-key reset at issuing stations and at the central supervisory control station.

b) Automatic shut-off of transfer pumps on loss of suction or no flow for more than 3 minutes. Upon automatic shut-off, a corresponding alarm at the central supervisory control station is activated.

4.8.3.2 All Pumps. Provide the following controls:

a) A stop-lockout button at each remotely operated pump for maintenance operation.

b) Indicator lights at the control station to give positive indications both when a pump is operating and when it is not energized. Use the "push-to-test" type.

c) A signal light or alarm to indicate pump failure when a pump is controlled automatically.

d) Reduced voltage starting if required by electric utility supplier or, in all cases, for pump motors greater than 50 hp (37 kW) and all vertical pumps.

e) EFSO buttons with lock-key reset at all pump locations and at the central supervisory control station.

4.8.3.3 Pipeline Pumps. For pumps over 150 horsepower (112 kW), provide protective shutdown devices with alarm at central supervisory control station in the event of the following:

a) High pump case temperature due to blocked discharge.

b) Excessive pump vibration.

c) Mechanical seal or packing gland failure.

d) High discharge pressure or loss of discharge pressure.

e) Excessive motor vibration.

f) High motor winding temperature.

g) Electrical interlocks which will prevent starting a pump if certain key valve settings are not correct and which will cause a pump shutdown if a key valve setting is changed.

h) Loss of pump suction pressure.

i) High-bearing temperature and/or loss of cooling water flow.

4.9 FUEL ADDITIVES. Provide storage facilities which store aviation turbine fuels with the equipment to inject fuel additives if directed by Service Headquarters. This will require proportional injectors, storage of additives, and recirculation of tanks through piping with injectors. If the additives have a corrosive characteristic, construct the system, including storage tanks, tank appurtenances, pumps if required, piping and associated fittings, valves, and injector

assemblies of stainless steel components. Additive injection is not normally performed at the installation level. Consult Service Headquarters for guidance as to which additives must be included.

4.9.1 Plus 100 Additive. Additive packages to raise the auto ignition point of jet fuel by 100 degrees F also act as surfactants which will disarm the filter/separators. There, it is important this additive package is introduced only at refueler fill stands, downstream of the filter/separator, prior to entering the truck. In addition, care must be taken to ensure there is no capability in the design for plus 100 fuel to be introduced back into storage. Because the plus 100 fuel is being used on a limited basis at designated air stations, the command fuels engineer will provide direction as to locations where it is permitted.

4.10 DEFUELING SYSTEMS. Because of degradation of flash point, ensure that JP-5 direct fueling systems are not capable of defueling an aircraft back into operating storage. Accomplish defuel by the use of tanker vehicles or dedicated defuel tanks. Provide JP-8 hydrant systems with defuel capability.

Section 5: MARINE RECEIVING AND DISPENSING FACILITIES

5.1 FUNCTION. Design marine fuel receiving and dispensing facilities for the purpose of receiving fuel and/or loading fuel aboard ships and boats for consumption or as cargo. In many cases, the marine receiving and dispensing facilities will be combined.

5.2 FUEL PIERS AND WHARVES. Ensure that the structural design of fuel piers and wharves is in accordance with MIL-HDBK-1025 series or Army Corps of Engineers AEI, as applicable. When required and approved by the appropriate Service Headquarters, design fuel piers for dispensing and receiving fuel. Ensure that the size of the facility is compatible with the fuel requirements of the activity and the number of simultaneous loadings and off-loadings to be accommodated. For dispensing of fuel, consider the number, type, and size of vessels to be fueled or loaded to provide the required number and locations of fuel outlets. In most cases, use dedicated fuel piers and wharves for fuel receipt. Include in the design an energy absorbing fender system. Refer to NAVFAC Definitive Drawings 1403995 through 1403999.

5.3 BERTHING PIERS. In some cases, permanent fuel piping and equipment may be installed on berthing piers which were not primarily designed for handling fuel. Design such piers in accordance with MIL-HDBK-1025 series or Army Corps of Engineers AEI. These facilities are normally used only for dispensing fuel to surface combatants for consumption. Operational requirements usually dictate a clear berthing pier surface area. This imposes restrictions on the use of loading arms and above deck piping. For these areas, below deck and trench-contained piping may be considered. Prior to designing facilities on berthing piers for receiving and/or dispensing of bulk fuel for transport, review plans with appropriate port operations agency.

5.4 OFFSHORE MOORINGS. When operations of an activity do not warrant construction of fuel piers, provide offshore moorings for vessels to discharge or receive fuel through underwater pipelines connecting to the shore facility. Clearly mark the moorings so that the vessel, when moored, will be in the proper position to pick up and connect to the

underwater connection. Coordinate offshore mooring systems with Naval Facilities Engineering Service Center, Ocean Construction Division (NFESC-OCD).

5.5 GENERAL REQUIREMENTS. Section 2, General Design Information, of this handbook contains important information on fueling facilities. Do not start the design of any fueling system without first becoming completely familiar with Section 2 of this handbook. In particular, refer to Section 2 for guidance on spill prevention, air quality control, and other environmental, safety and fire protection issues.

5.6 GENERAL LAYOUT. Provide pier loading and off-loading connections, with cap and plug valve, at the pier edge for each product to be transported. The intent is for a loading arm manifold with a separate shutoff plug valve for each product connection. This will allow simultaneous loading and off-loading of different products, each through a dedicated arm. Use the following criteria:

a) Provide each branch line to the pier edge with a valve located at the main line.

b) Do not provide a gauge outboard of the hose connection shut off valve because hose movement will indicate the presence or absence of pressure in the hose.

c) If required, provide one or more loading arms at each station.

d) Provide a liquid-filled pressure gauge for each loading arm, located to be easily read from the operator position. This gauge is provided because the drybreak check valve at the end of the loading arm and the rigid piping will not intuitively indicate the presence or absence of pressure at the loading arm.

e) Provide for venting and draining of the branch lines and loading arm manifolds. Provide for manual venting of the branch lines, connect the vents to the oil waste line, similar to a sanitary vent system to avoid spillage. When pier drain lines cannot be sloped back to the pierhead stripping pumps, a design including separate oil waste drain lines, holding tank, and dedicated stripping pump is a viable alternative.

f) Provide segregated handling of multiple products through the loading arms, while allowing easy selection of the products to be transported. Double block and bleed valves can be used for this application.

g) Provide a separate pipe and connection for ballast water or offspec fuel if the size of the facility and level of activity warrants it.

h) Provide each hose handling and loading arm area with fixed spill containment as defined in 33 CFR 154.

5.7 PIPING SYSTEMS. Refer to Section 9 of this handbook.

5.7.1 Piping Arrangement. In addition to complying with Section 9, use the following criteria:

a) Where simultaneous deliveries of the same fuel may be made by more than one vessel, size fuel headers and related equipment for the total flow rates of all vessels discharging into the headers. Ensure that flow rates are in accordance with Section 2 of this handbook.

b) Place pier piping above the pier deck. Slope piping toward shore to permit stripping. Use gratings as required to allow access across the piping.

c) Provide flexibility in the piping between the pier and the shore to allow for small movement of the pier relative to the shore. Use a suitable pipe bend or offset configuration, preferably in a horizontal plane, that will allow three-dimensional movement. If vertical bends are used, install vents and drains.

d) Include in the pier facilities, pipe manifolds for each fuel type arranged parallel to the face of the pier.

5.8 EQUIPMENT DESCRIPTIONS

5.8.1 Loading/Off-loading Arms. Provide articulated marine loading arms for receiving and shipping fuel cargoes so that the connected vessel can move 15 feet (4.6 mm) forward, 15 feet (4.6 mm) aft, and 10 feet (3 m) off the face of the pier and vertically as caused by loading or off-loading of the

vessel and tidal changes, without damage to the arm. Provide a hydraulic power assist system for operating loading arms larger than 8-inch (200 mm) nominal size. Equip the end of the loader to be connected to the ship's manifold with an insulating section, a standard ANSI forged steel flange, and a steel quick coupling device, manually or hydraulically operated. Refer to NAVFAC Drawing No. 1403997. Consider breakaway couplings for locations with strong current.

5.8.2 Fuel Hoses. Loading/off-loading arms are the preferred method to be used. Provide a facility for storing and protecting the hose as near as practical to the pier if hose is provided in lieu of loading/off-loading arm.

5.8.3 Submarine Fuel Hoses. Provide submarine fuel hose where offshore moorings are used. Use heavy duty, smooth bore, oil and gasoline, marine cargo, discharge hose rated for a working pressure of not less than 225 psig (1550 kPa) and built-in nipples with Class 300 flanges with stainless steel bolts and Monel nuts. Hoses should be U. S. Coast Guard certified.

5.8.4 Meters. Provide a turbine or positive displacement meter for each dispensing outlet that might be used simultaneously. With the approval of the appropriate Service Headquarters, use portable meters where fueling operations are intermittent. Also consider the use of alternative technologies such as ultrasonic meters. Require temperature compensation feature at each meter used for custody transfer.

5.8.4.1 Positive Displacement. Require flange-connected, cast steel bodied positive displacement meters of the desired pressure and flow rating for the applicable service requirements. Ensure meter has temperature-compensation, adjustable calibration, register and pre-set capabilities. Ensure meter accessories are compatible with either the mechanical or electronic support equipment selected. Provide an accuracy of plus or minus 0.5 percent when used for custody transfer. Consult the appropriate Service Headquarters for requirements for the meter to communicate to a remote location or equipment. Consider the use of a card-operated or key-operated data acquisition system. Cards or keys, as appropriate, are coded to identify the receiver of the fuel and to allow access to the fuel. The quantities taken are

transmitted to a data-receiving device by electronic pulse transmitters mounted on each meter, and each transaction is automatically recorded.

5.8.4.2 Turbine. Use flange-connected, steel bodied turbine meters of the desired pressure and flow rating for the applicable service requirement. Ensure meter has temperature-compensation and adjustable calibration. Ensure all supporting equipment for meter is compatible with the turbine meter selected. Provide an accuracy of plus or minus 0.5 percent when used for custody transfer. Consult the appropriate Service Headquarters for requirements for the meter to communicate to a remote location or equipment. Consider the use of a card-operated or key-operated data acquisition system. Cards or keys, as appropriate, are coded to identify the receiver of the fuel and to allow access to the fuel. The quantities taken are transmitted to a data-receiving device by electronic pulse transmitters mounted on each meter, and each transaction is automatically recorded.

5.8.5 Strainers. Require a strainer to protect centrifugal pumps, unless it precludes meeting the set positive suction head of the pump. Whether or not strainers are installed on the suction side of centrifugal pumps, install a spool piece so that temporary strainers can be installed during startup of the system. Strainers are required on the suction side of all positive displacement pumps and meters. Strainers are not required upstream of filter/separators or hydraulically operated diaphragm control valves, except they are required upstream of filter/separators which are upstream of operating storage tanks. Also:

a) Use flanged strainers constructed of steel and fitted with removable baskets of fine Monel metal or stainless steel mesh with large mesh reinforcements.

b) Unless otherwise specified, provide a fine screen mesh as follows:

	Mesh	Size of Opening
Pump suctions (Centrifugal)	7	0.108 inch (2.74 mm)
Pump suctions (Rotary)	40	0.016 inch (0.40 mm)
Meter inlets	40	0.016 inch (0.40 mm)

c) In all cases, ensure the effective screen area is not less than three times the cross sectional area of the pipe.

5.8.6 Surge Suppressors. Every effort should be made to control hydraulic surge or shock to acceptable limits by the design of the piping system rather than by the use of surge suppressors. Where this is not possible, or becomes extremely impractical, a surge suppressor(s) may be incorporated. Use the diaphragm or bladder type equipped with a top-mounted liquid-filled pressure gauge, isolation valve, and drain. Locate surge suppressors as close as possible to the point of shutoff that is expected to cause the shock. Provide a check valve at the bottom with a weep hole in the clapper.

5.8.7 Valves

5.8.7.1 Materials of Construction. Use carbon steel bodies and bonnets for valves at marine receiving and dispensing facilities. Do not furnish or install cast iron or bronze-bodied valves in liquid petroleum service.

5.8.7.2 Types and Locations

a) Provide a block valve on each line at the shore end. For piping used only for receiving fuel, also provide a check valve at the shore end. Use double block and bleed type, which may be motor-operated with remote control. To minimize surge potential, use a slow-closing speed, if possible.

b) In piping used for off-loading only, provide a non-surge check valve near the base of the marine loading arm to minimize loss of fuel in case of damage to the loading arm. In piping used for both loading and off-loading, equip the check valve with a manual override.

c) Provide block valves on the aboveground piping at each barge or tanker off-loading and loading connection.

d) Provide block valves near the shoreline of a submerged pipeline to offshore moorings.

e) Provide block valves on the inlet and outlet connection of each line strainer, filter/separator, meter, automatic valve, and other equipment that requires periodic servicing. One inlet valve and one outlet valve may be used to isolate more than one piece of adjacent equipment which are connected in series.

f) Provide thermal relief valves around all block and check valves that can isolate a section of piping.

g) Do not use gate valves in fueling systems.

5.8.8 Pressure or Pressure/Vacuum Gauges. Use glycerin-filled or silicone-filled pressure gauges of range and dial size, as necessary, but not less than 0 to 160 psig (0 to 1100 kPa) pressure range and 4-inch (100 mm) diameter dial. Also:

a) Use pressure gauges upstream and downstream of strainers, filters/separators, and cartridge-type fuel quality monitors. A differential pressure gauge may be used in lieu of gauges on each side.

b) Install compound (pressure/vacuum) gauges on the suction side of each pump at fuel storage tanks.

c) Provide a lever handle gauge cock and pressure snubber in each pressure gauge connection.

d) Provide a pressure gauge on each side of the pipeline shutoff valve at the shore end of each pier-mounted pipeline. Provide the indicating pointer with a high-pressure-reading tell-tale indicator suitable for reporting

the highest pressure experienced since last reset. Provide for non-contact resetting of the tell-tale by means of a small magnet.

e) Provide a pressure gauge on each branch line at each fueling station on each pier-mounted pipeline. Ensure that the pressure gauge is legible from the fuel hose connection array and from the pantograph loading arm location (if provided).

f) Provide a pressure gauge on each marine loading arm assembly (if provided). Ensure that the gauge is visible by the operator.

5.8.9 Stripper Pumps. Provide positive displacement stripper pumps for emptying loading arms, hoses, and manifolds. Provide a stripper pump to reclaim each clean product from each main product line, or connect the product lines to the oil waste drain line. Conduct an economic analysis of the two alternatives to determine the appropriate choice. Larger, longer, or more frequently drained lines will favor the stripper pump choice. Use a stripper pump on multiple product lines, but do not exceed acceptable limits of cross contamination. Provide a dedicated stripper pump to each sensitive product line, such as aviation turbine fuels.

5.8.10 Excess Flow Sensors. In piping used for both loading and off-loading, provide a sensor to detect excess flow that might occur in the event of a line break. This is accomplished with a diaphragm valve with an excess flow feature. Design the excess flow sensor to close a remote-operated block valve.

5.8.11 Solid Cyclonic Separators. In facilities which receive product by tankers or barge, consider the use of solid separators in the receiving lines to remove gross impurities from the incoming product. In systems equipped with filter/separators in the receiving lines, locate strainers or cyclonic separators upstream of the filter/separator. Ensure that there is no slug valve feature on the filter/separator. Consider the use of automatic water drains.

5.8.12 Clay Filters. If tankage is not available for handling of surfactant contaminated fuels at marine receiving facilities, consider providing clay filters in addition to other filtration equipment selected.

5.8.13 Special Considerations for Aviation Turbine Fuels. Provide a means of inbound filtration for aviation turbine fuel. This is normally a filter/separator as described in Section 4 of this handbook. However, the selection of filtration depends on anticipated impurities. Consider the use of prefilters, micronic filters, cyclonic filters, and haypack filters as possible filtration devices.

5.9 WEATHER SHEDS. Provide adequate shelter for personnel, as well as for spill containment booms, absorbent material, and other weather-sensitive equipment.

5.10 SAFETY SHOWERS AND EYE-WASH FOUNTAINS. Provide manual shutoff valves on the potable water branch to the safety shower and eye-wash fountain. Provide a means to seal shutoff valve in the open position. This will ensure operation in an emergency, yet allow for servicing a single shower without shutting off potable water to the whole pier. Design for freeze protection in climates subject to freezing. Install safety showers and eyewash fountains in accordance with ANSI Z358.1.

5.11 TRAFFIC BOLLARDS. Provide traffic bollards to protect fueling piping and equipment on piers and wharves. Utilize concrete-filled steel pipe of minimum 4-inch (100 mm) diameter and 4-foot (1.2 m) height, embedded in concrete or welded to a steel plate mounted on the structure.

5.12 SPECIAL DRAINAGE FOR FUELING PIERS

a) Provide an intercept system to collect oil spills. Place pipes on piers in a containment trench with a drain system independent of the deck drainage. Provide containment also for loading arms and risers. Provide locking valves in normally closed positions on all containment areas along with sump pumps or other means of removing the spilled fuel to a collection point or tank.

b) In cases where the stormwater collected in the intercept system is contaminated, the water/fuel mixture should be treated as an oil spill as described previously.

5.13 BALLAST TREATMENT AND SLUDGE REMOVAL

5.13.1 Ballast Receiving and Treatment Facilities

5.13.1.1 Design Requirements. It is the policy of the United States that there should be no discharge of oil or hazardous substances into or upon the navigable waters of the United States, adjoining shorelines, or into or upon the waters of the contiguous zone. Petroleum fuel facilities, which transfer fuel by barge or tanker, or which fuel large ships, require ballast water collection and treatment facilities to receive and treat oily ballast from cargo or fuel tanks. Also:

a) Blend the fuel oil which has been reclaimed from the ballast water during the collection and treatment process with boiler fuel oil for use in shoreside boilers. Perform a quality assurance check on the reclaimed fuel oil to ensure that it meets the minimum requirements for shoreside boiler fuel. Dispose of sludge accumulated during the collection and treatment of ballast water in accordance with applicable hazardous waste management disposal procedures.

b) Select and design the appropriate treatment system based on an evaluation of the types of oil/water mixtures that may be encountered at the particular facility. If possible, base the evaluation on samples of typical ballast water receipts and tank washings including the following:

(1) Whether they are simple mixtures, simple gravity suspensions, or chemically stable emulsions.

(2) The specific gravity and viscosity of the oil in the mixture.

(3) Whether other substances, such as chemicals or bacteria, in the mixtures must be removed.

(4) The general condition of the ship's tanks expected to be discharged (e.g., new, clean, coated, well maintained, or dirty and normally full of sludge, scale, and rust).

(5) Whether ballast water is clean sea water or polluted harbor water.

(6) Whether the treatment system proposed ("ship's waste off-load barge" or fixed shore-based facilities) meets the standards of effluent water quality established by local environmental regulations.

c) If it is determined that both simple mixtures and emulsions are present, consider the possibility of using two segregated separate systems, one for gravity separation and the other for breaking emulsions. Avoid mixing the two types of suspensions when possible. For bilge water and other contaminated oily wastes which require additional treatment, refer to MIL-HDBK-1005/9, Industrial and Oily Wastewater Control or for Army and Air Force projects MIL-HDBK-1005/17, Nondomestic Wastewater Control and Treatment Design.

d) For typical schematic arrangement of ballast water treatment and disposal systems, refer to NAVFAC P-272.

5.13.1.2 Receiving and Settling Tanks. The minimal ballast water receiving facility usually requires two storage tanks, usually of equal capacity, to be used alternately as receiving and settling tanks. If these tanks are sized to allow 4 to 5 days undisturbed settlement, separation of simple suspensions of light oils in water can be achieved. Use welded steel vertical aboveground storage tanks designed and constructed in accordance with Section 8 of this handbook. In addition to complying with Section 8 of this handbook for construction appurtenances, provide the following fittings and appurtenances:

a) An automatic float gauge suitable for use with transmitting device for remote readout.

b) One cable-operated swing-line assembly on the oil outlet pipe.

c) One shell fill nozzle.

d) Valved sample connections in the shell, having nonfreezing-type valves in cold climates, every 2 feet (0.6 m) vertically, easily accessible from the ladder or stairway.

e) When chemical feed is provided, a chemical feed inlet valve, to be nonfreezing type in cold climates.

f) When air blowing is provided, a perforated pipe air sparger for mixing. Make the perforations in the sides of the pipe to avoid plugging by settling solids. Use nonfreezing-type air inlet valve(s) in cold climates.

g) Sight glass or look box on oil outlet line.

h) Sight glass or look box on water outlet line.

i) Oil sump tank with high-level alarm.

j) Water and oil pumps as required to move fluids from receiving tanks or from oil sump tanks. For transfer of oily water, use low-speed-type pumps to minimize emulsification.

k) If heaters are required to reduce oil viscosity and promote separation, use either tank wall heaters or internal pipes. Keep internal pipes at least 2 feet (0.6 m) above the tank floor.

l) Insulation for tanks that will be regularly heated.

m) Provide automatic temperature controls and thermometers for all heated tanks.

5.13.1.3 Oil/Water Separators. Separate water/fuel mixtures from storage or settling tanks with an API oil/water separator. Recycle the fuel portion and pass the water portion to another treatment process. Do not discharge water drawn from tanks to surface water without additional treatment and permits. Section 2 of this handbook contains design information for an API oil/water separator.

5.14 SLUDGE REMOVAL SYSTEMS

5.14.1 Design Requirements. Install sludge removal systems where the accumulation of sludge in substantial quantities is likely to occur on a regular basis. Sources of such sludge are a ballast water treatment system, a contaminated fuel recovery system, or frequent cleaning of shore or ships' tanks. If routine cleaning of clean product storage tanks occurs on an irregular basis, sludge removal systems are not required.

5.14.2 Sludge Disposal

a) Where possible, provide pumps, tanks, and piping to return sludge containing recoverable oil to the contaminated oil recovery system. If this is not possible, consider transferring the sludge to a refinery or waste oil treatment facility. For additional details, refer to MIL-HDBK-1005/8 or for Army projects, Corps TM 5-814-3.

b) Provide a tank or tanks with transfer pump(s) for pumpable sludges that are unreclaimable. Include piping for receiving sludge and for mixing other low viscosity waste oils for thinning as required. Ensure that tanks are dike-enclosed and have cone bottoms.

c) Provide tank heating where climate conditions prove necessary.

d) Coordinate sludge disposal method and design with facility environmental office.

e) Enclose the sludge disposal facility with a security fence to prevent unauthorized entry. Do not use this facility for disposal of sand, gravel, rust scale, or other solid nonpumpable matter found on tank bottoms. For further discussion of disposal methods, refer to NAVFAC MO-230.

5.14.3 Piping Materials. Refer to Section 9 of this handbook.

Section 6: INTERTERMINAL AND INSTALLATION PIPELINES

6.1 INTRODUCTION. This section provides guidance for the design of pipelines. Military pipelines are typically either interterminal pipelines which are cross country and connect government installations, or installation pipelines which connect POL facilities within an installation. The primary differences are that interterminal pipelines cross public and private properties, streets, highways, railroads, and utility rights-of-way, whereas installation pipelines do not. Interterminal pipelines may be dedicated lines connecting two or more facilities or privately owned common carrier lines serving several commercial or military shippers. In some cases, the shipping facility may consist of a relatively short spur which delivers the fuel to the suction side of a pumping station which is part of the main line of a larger pipeline system. Pipeline receiving and dispensing facilities are normally part of a bulk fuel storage facility, which is discussed in Section 3 of this handbook.

6.2 GENERAL REQUIREMENTS. Section 2, General Design Information, contains important information on fueling facilities. Do not start the design of any fueling system without first becoming completely familiar with Section 2 of this handbook.

6.3 DESIGN REQUIREMENTS

6.3.1 Fuel Segregation. Clean products, such as diesel fuel and distillate-type burner fuels, may be shipped in the same system without segregation. Batches are separated by pipeline balls or pigs. Separate piping systems are required for residual fuels. For DOD projects, provide a dedicated pipeline for aviation turbine fuels.

6.3.2 Interterminal Regulations. The U.S. Department of Transportation regulates the design, construction and operation of interterminal pipelines for liquid petroleum. Requirements are given in 49 CFR Part 195.

6.3.3 Sampling. Provide a means for taking samples of the products shipped.

6.4 PIPING SYSTEMS. Refer to Section 9 of this handbook.

6.4.1 Interstate Requirements. Provide piping system in accordance with 49 CFR Part 195, as well as any applicable local or state regulations for environmental protection.

6.5 EQUIPMENT. Equip all pipelines with meters, strainers, and capability of installing a proving meter.

6.5.1 Meters. Equip pipelines which include one or more water crossings 200 feet (60 m) or more from bank to bank and other critical areas with at least two meters, one on either side of the crossing(s). Use meters with an accuracy plus or minus 0.5 percent for custody transfer and as required by applicable codes when used for leak detection. Technologies other than the two listed below are acceptable when meeting the accuracy requirements.

6.5.1.1 Positive Displacement. Require flange-connected, cast steel bodied positive displacement meters of the desired pressure and flow rating for the applicable service requirements. Ensure that meter has temperature-compensation (where there is a custody transfer), adjustable calibration, register and pre-set capabilities. Ensure meter accessories are compatible with either the mechanical or electronic support equipment selected. Consult the appropriate Service Headquarters for requirements for the meter to communicate to a remote location or equipment.

6.5.1.2 Turbine. Use flange-connected, steel bodied turbine meters of the desired pressure and flow rating for the applicable service requirement. Ensure meter has temperature-compensation and adjustable calibration. Ensure all supporting equipment for meter is compatible with the turbine meter selected. Consult the appropriate Service Headquarters for requirements for the meter to communicate to a remote location or equipment. Consider the use of a card-operated or key-operated data acquisition system. Cards or keys, as appropriate, are coded to identify the receiver of the fuel and to allow access to the fuel. The quantities taken are transmitted to a data-receiving device by electronic pulse transmitters mounted on each meter, and each transaction is automatically recorded.

6.5.2 Manual Valves. Consider the use of full port valves on pipelines to allow pigging.

6.5.2.1 Locations. Provide valves in product piping systems to control flow and to permit isolation of equipment for maintenance or repair. Provide additional valves at required locations necessary to conduct a valid hydrostatic test. Provide manually operated valves, except where motor operators are specifically authorized by applicable standard drawings or technical specifications. As a minimum requirement, provide block valves at the following locations:

a) On each branch line at the point of connection to the main product pipeline or header.

b) On the product pipeline or header just before the line leaves a pumping station.

c) On the inlet and outlet connection of each line strainer, filter/separator, meter, automatic valve, and other equipment that requires periodic servicing. One inlet valve and one outlet valve may be used to isolate more than one piece of adjacent equipment which are connected in series.

d) On the upstream and downstream side of each line blind at connections to cross country pipelines.

e) On each main distribution pipeline immediately downstream of the branch connection to each existing or future operating storage facility served by the pipeline.

f) At intermediate points of approximately 10 miles (16 km) in cross country distribution pipelines to facilitate isolation of a section of the line for maintenance and repair.

g) On each side of water crossing exceeding 100 feet (30 m) in width, and near the shoreline of a submerged sea pipeline.

h) Do not use gate valves in fueling systems, except where pipeline is piggable and absolute shut-off is not required such as item (d) above.

i) At critical points where pipes cross under runways, taxiways, and roadways.

j) For low-point drains and high-point vents.

6.5.2.2 Materials of Construction. Use carbon steel or nodular iron bodies and bonnets for all pipeline valves. Do not furnish nor install cast iron or bronze-bodied valves in liquid petroleum service.

6.5.2.3 Types

a) Provide ball valves where quick or frequent opening or closing is required. Require synthetic seals or seating material of Teflon or viton. Use valves that are designed so that if synthetic seating material is burned out in a fire exposure, a metal-to-metal seat will remain to affect closure and comply with API Std 607. Where line pigging is required or if within ten pipe diameters upstream of flow or pressure control valves or flow sensing devices such as venturis, use full port ball valves. Valves should comply with API Std 608.

b) Use check valves to prevent backflow through branch lines, meters, or other locations where runback or reverse flow must be avoided. Check valves may be of the swing disk, spring-loaded poppet, or ball types. Use swing checks of soft-seated non-slamming type with renewable seats and disks. Conform check valves to API Spec 6D.

c) Use lockable, double-seated, tapered lift plug valves with an automatic body bleed between the seats (double block and bleed) for separation of product services, when piping goes above or below ground, between pier and tank storage, and other locations critical to pressure-testing of piping. Do not use lubricated plug valves.

6.5.2.4 Valve Operators. Provide manually operated valves not specified for remote, automatic, or emergency operation. Use geared operators for gate valves larger than 6 inches (150 mm). Use geared operators for ball and plug valves larger than 6 inches (150 mm). Gate, ball, and plug valves specified for remote, automatic, or emergency service may have electric motor operators with suitable torque limiting controls if

approved by Service Headquarters. Consider using locking tabs on valves to allow padlocks to be used to lock out valves during maintenance.

6.5.3 Hydraulically Operated Diaphragm Control Valves. Diaphragm-operated globe valves are used extensively in fueling systems as control valves. These valves consist of a main valve and a pilot control system. The valve is operated by varying the amount of pressure above the diaphragm. Since the chamber above the diaphragm exposes a greater area of the diaphragm to chamber pressure than the area of the disc exposed to line pressure, an equal pressure in the chamber and pipeline results in a greater force being applied to the top of the disc. This forces the disc against the seat, thus closing the valve. By selecting the proper pilot control system, these valves can be used in numerous ways to control flow, pressure, and level within fueling systems. Use extreme care when including these valves on pipelines as they can significantly contribute to surge potential, if closing time is too short. When properly adjusted, they can reduce surges.

6.5.3.1 Open/Close Operation. This is the most basic operation of hydraulically operated diaphragm control valves. The operation is accomplished by applying pressure above the diaphragm to close the valve and relieve that pressure to allow line pressure to open the valve. The pilot trim used to perform this operation is a three-way valve which can be controlled by a solenoid, hand, pressure, pressure differential, or a float.

6.5.3.2 Throttling. This is the other main method of controlling the hydraulically operated diaphragm control valve. In this case, the valve modulates to any degree of opening, in response to changes in the throttling control. The throttling control reacts to a pressure differential across the main valve or across an orifice plate to regulate the position of the disc in the main valve.

6.5.3.3 Check Valve Function. This is a unique function of a control valve. In this case, the main valve outlet pressure is connected to the diaphragm cover. Therefore, if the

downstream outlet pressure exceeds the inlet pressure (which normally holds the valve open), the valve will close and prevent backflow.

6.5.3.4 Remote Operation. Hydraulically operated diaphragm control valves can be operated remotely. This is accomplished by installing tubing from the point of pressure sensing to the valve or by using remote-controlled solenoids within the trim.

6.5.3.5 Materials of Construction. Use stainless steel or aluminum (in non-contained areas) pilots and tubing. Use bodies, bonnets, and covers made of aluminum, stainless steel, or internally plated (chromium or nickel) cast steel. Provide viton or Buna-N diaphragm and disc ring. Enclose electrical apparatus according to classification of the area in which they are installed. Provide means to wire seal adjustable pilots. Do not use aluminum valves within a contained area.

6.5.3.6 Applications. For pipeline systems, use hydraulically operated diaphragm control valves in the following applications:

a) Rate of flow control.

b) Pressure reduction.

c) Pressure relief.

d) Excess flow shutdown.

6.5.3.7 Combinations. A combination of these controls is also possible. Typical use of these controls is on a filter/separator for water slug shutoff and rate of flow control.

6.5.4 Surge Suppressors. If used, provide surge suppressors of the diaphragm or bladder type; equipped with a top-mounted liquid-filled pressure gauge, isolation valve, limited bleed-back check valve, and drains; and located as close as possible to the point of shutoff that is expected to cause the shock. Provide a check valve at the bottom with a weep hole in the clapper. Surge suppressors can reduce shock pressure but will not eliminate it entirely. The preferred solution to hydraulic shock is conservative piping design, use of loops, and slow-closing valves.

6.5.5 Pigging Equipment. Equip all pipelines with outlets to allow the connection of pig launchers and traps. Design the outlets so that they can accommodate internal nondestructive inspection trains. Provide sufficient curvature of bends in the pipeline to permit free passage for such equipment. Consider the installation of tees with internal guide bars at branch connections.

6.5.6 Pumps. Primary pumping facilities are discussed in Section 3 of this handbook. If multiple pump stations are required to keep pipeline pressure within safe limits, provide them at appropriate locations. Section 3 also provides guidance for those pumping facilities.

6.5.7 Sampling Connections. Provide connections for sampling fuels on each section of a fuel transfer piping system. Install sampling and testing connections at receiving points, tank outlets, inlet and outlet sides of filter/separators and fuel monitors, fuel dispensing points, and between block valves so that remaining fuel in each portion of a fuel transfer pipeline can be sampled. Where possible, install sampling connections in vertical runs. Provide a 1/4-inch (6 mm) diameter sample point with a probe, ball valve, and quick disconnect with dust cap.

6.6 SPECIAL CALCULATIONS. Calculate pipeline filling/venting times and draining/stripping times. The larger and the longer the pipeline, the greater the volume of fuel required to fill the line and, therefore, the greater the volume of air required to be vented. Undersized vent lines will delay filling the lines and delay changeover of products in multiproduct lines. Size vent lines to allow filling of the line at not more than four times the design transit time of the line. Connect vent line to the drain line to avoid spills to the environment. Check vent line air velocity, which must not exceed the allowable air velocity to avoid electrostatic buildup, in accordance with API RP 2003. Vent rate must be not less than the lowest allowable pumping rate from ship or shore. Vent rate must be less than the design transit velocity to minimize hydraulic shock.

Section 7: GROUND VEHICLE FUELING FACILITIES

7.1 INTRODUCTION. This section provides guidance for the design of ground-based vehicle fueling facilities. Only government vehicle filling stations are included. Private vehicle filling stations, such as exchange service stations, are not included.

7.1.1 Types of Facilities. The following three types of filling stations may be required (see Facility Plate Nos. 011 through 013):

a) A facility for dispensing gasoline and diesel into commercial type sedans, vans, and small trucks.

b) A facility for dispensing gasoline and diesel into tactical vehicles.

c) A facility for dispensing gasoline and diesel into tactical refueler vehicles.

7.2 GENERAL REQUIREMENTS. Section 2, General Design Information, contains important information on fueling facilities. Do not start design of any fueling system without first becoming completely familiar with Section 2 of this handbook.

7.3 DESIGN REQUIREMENTS

7.3.1 Fuel Segregation. Provide separate storage and dispensing facilities for each grade or type of fuel to be dispensed. In the CONUS, use API color coding. In non-CONUS facilities, use host nation standard if it is different than API. Use API if no other standard is in effect.

7.3.2 Facility Size. In each filling station, provide one commercial-type dispensing unit which displays volume only for each 100 vehicles assigned to the activity. The total amount of storage capacity in each station should be approximately twice the capacity of all vehicle fuel tanks, by grade or type of fuel, assigned to the activity. Minimum storage capacity for any grade or type of fuel is 5,000 gallons (19 000 L) unless approved by Service Headquarters.

7.3.3 Facility Configurations. In general, for control and safety, separate the three types of filling stations. For a relatively small installation or one on which there is a limited amount of activity expected at one time, it may not be practical to provide totally separate facilities. In those cases, separate the functions as much as possible to minimize mixing traffic of commercial-type vehicles from tactical vehicles and, more importantly, from mixing refuelers which are being loaded with relatively large quantities of fuel from other vehicles which are being fueled for their own engine.

7.3.4 Shelters. For staffed facilities, provide a shelter for personnel, records, and tools.

7.3.5 Regulations. Design must comply with NFPA 30, NFPA 30A, and API RP 1615.

7.3.6 Bottom Loading. The bottom loading of refuelers is required if the refuelers are equipped for it. However, there are refuelers which are not equipped for bottom loading and which will be in inventory for several years. Therefore, consult Service Headquarters to determine if tactical refueler fill stands should be designed for top loading, bottom loading, or both.

7.4 STORAGE TANKS. Section 8, Atmospheric Storage Tanks, contains information on aboveground and underground storage tanks. For filling station facilities underground, horizontal tanks are preferred. However, if local environmental requirements or other mitigating circumstances preclude them, aboveground tanks are allowed.

7.5 PIPING SYSTEMS. Refer to Section 9 of this handbook.

7.6 EQUIPMENT DESCRIPTIONS

7.6.1 Consumptive Use Filling Stations

7.6.1.1 Fuel Dispensers. Use a commercially available dispenser with a self-contained electric motor and pumping unit or a remote pumping type where the pump and motor are located in the storage tank. If an in-tank type of pump is used, ensure that it is equipped with a reduced start volume as a leak check. Provide a meter for each dispenser. Flow

rates for passenger vehicles are 10 gpm (0.6 L/s). Flow rates for trucks and buses are approximately 25 gpm (1.6 L/s). Dispensing system will include management control system, printers, computers, and microprocessors. Equip fuel dispensers with an inline filtration system capable of sediment removal to 10 mg/L or less.

7.6.1.2 Card and Key Locks. Consider the possible economic and operational advantages of using an electronic card or key system which permits 24-hour unmanned operation of the facility. These types of systems are comprised of a card/key reader which is located near the service pump. The reader is activated by a card or key and accumulates issues and customer data which is downloaded to a central computer on a periodic basis. Activities with capitalized fuel, that is petroleum product owned by DLA/DFSC, are eligible for projects to install automated card/key lock systems. Activities with capitalized fuel report inventories of these products to DFSC through a system called FAS. Automated systems to control capitalized inventories must be able to interface with the FAS. These types of automated systems are managed under the AFSS program by DFSC. It should be noted that AFSS equipment is used to control issues of product and is not an automated tank gauging system. Further information on AFSS systems and funding programs may be obtained by contacting DFSC-FE.

7.6.2 Tactical Refueler Fill Stands. Equip similar to truck loading facilities covered in Section 3 of this handbook except provide a grounding reel in lieu of the high-level shutoff/ground detecting system. Verify the type of nozzle required by the user.

7.7 DRAINAGE. Surround fueling islands with a concrete slab graded at a minimum of 1 percent towards a drainage inlet connected to a containment or treatment facility. Provide containment and drainage for tactical refuelers at the same level of protection as in Section 4 of this handbook for aviation refueler loading.

7.8 VAPOR RECOVERY. Provide vapor recovery in accordance with guide specifications unless there are more stringent local, state, or federal codes or regulations. Some requirements are in 40 CFR 60 Subpart XX. If gasoline is being handled, provide, as a minimum, Stage I vapor recovery

and the piping for Stage II. If Stage II is not required at time of installation, cap the vapor return pipe at the dispenser.

Section 8: ATMOSPHERIC STORAGE TANKS

8.1 INTRODUCTION. This section provides guidance for the design of bulk storage tanks, Ready-Issue (operating) storage tanks, ground vehicle fueling tanks, miscellaneous use tanks, contaminated fuel storage tanks, and jet engine test cell fuel storage tanks. Design guidance on issues related to storage tanks such as protection, location, coatings, product recovery, and dikes are also covered in this section. Ballast water storage tanks are covered in Section 5 and pressurized tanks for storage of LPG are covered in Section 10 of this handbook.

8.2 GENERAL REQUIREMENTS. Section 2, General Design Information, contains important information on fueling facilities. Do not start design of any fueling system without first becoming completely familiar with Section 2 of this handbook.

8.3 GENERAL CRITERIA. Design liquid fuel storage tanks to comply with the operational requirements of the particular command having jurisdiction of the facility. Ensure that the design is appropriate for the mission of the facility. Consider the operational requirements of the users of the fuel.

8.3.1 Protection. Provide protection to preserve product quality and ensure minimal losses by evaporation, dilution, leakage, substitution, theft, contamination, attack, sabotage, fire, and damage to the environment. Use aboveground steel tanks unless the mission of the facility or other practical considerations dictate that underground tanks be used. Cut and cover (buried vertical) tanks are not normally used in the CONUS. Cut and cover tanks may be required if the dispensing system is located in clear zones or explosive cordon area. Conduct economic, operational, and mechanical analyses of remotely locating the pumphouse/system from the hydrant system versus constructing cut and cover tanks.

8.3.2 Design Requirements. Fuel storage facilities provide an operating and reserve supply of fuel. The types and sizes of storage tanks depend on safety, economics, terrorist activity, locality, and intended service. Provide

separate storage for each type and grade of fuel. For aviation activities, provide a minimum of two tanks for each type of fuel.

8.3.3 Storage Capacity. The capacity or size of each fuel storage tank is based upon the logistical requirements for the facility and any other facility to be supported from it. For a stated volume of each fuel, fewer tanks of larger size will result in maximum economy. The appropriate Service Headquarters with DFSC/DLA approval will determine the number and size of tanks required. Rule of thumb guidance for operating storage and bulk storage capacity is available in Navy P-80. Provide a minimum of two tanks at aviation activities for each type of aviation turbine fuel to receive and isolate new receipts until tested and checked for quality and quantity while the facility continues to function with stocks on hand. In general, capacities of individual tanks should not exceed 50 percent of the total storage volume required for each type and grade of fuel. Do not provide tanks with capacities greater than 100,000 barrels (16 000 m^3) except when larger tanks are specifically authorized by Service Headquarters.

8.3.4 Tank Spacing

8.3.4.1 Vertical Tanks. Provide a minimum distance between the shells of vertical tanks, both aboveground and underground, of not less than one diameter of the larger tank.

8.3.4.2 Horizontal Tanks. Provide a minimum clearance between shells of adjacent horizontal underground tanks of 3 feet (0.9 m). Provide a minimum clearance between aboveground horizontal tanks with capacities 40,000 gallons (151 400 L) or under as follows:

a) Arrange tanks in pairs with a minimum of 5 feet (1.5 m) between tanks in each pair and 10 feet (3 m) between adjacent tanks of two pairs in the same row.

b) Space adjacent groups of more than two pairs in a single row with at least 20 feet (6 m) between the nearest tanks of the groups.

c) Provide a minimum end-to-end spacing between tanks in longitudinal rows of 20 feet (6 m).

8.3.4.3 Aboveground Concrete-Encased Tanks. Provided the concrete encasement meets or exceeds the definition of fire-resistant or vaulted tanks as stated in NFPA 30A, use the spacing criteria for aboveground horizontal tanks and reduce by 50 percent.

8.3.5 Distance From Buildings and Property Lines. Locate tanks a sufficient distance from buildings and property lines to prevent the ignition of vapors from the tank and to protect buildings and their occupants or contents from damage by a tank fire. Assume that the maximum internal pressure in a fire exposure will not exceed 2.5 psig (17 kPa). As a minimum, comply with requirements of the following paragraphs.

8.3.5.1 Underground Tanks. Locate underground tanks with respect to buildings or similar structures so that the soil pressure created by the building foundations will not be transmitted to the tank. Pumping facilities which are often located directly above underground tanks are excepted. Locate horizontal cylindrical tanks not over 12 feet (3.7 m) in diameter and not less than 10 feet (3 m) from the nearest point of an adjacent building or property line except pumping facilities. Locate vertical underground tanks at least 25 feet (7.6 m) from the nearest point of an adjacent building and 50 feet (15 m) from the nearest property line except pumping facilities.

8.3.5.2 Aboveground Tanks. Locate aboveground tanks with consideration of fire safety. The first consideration is to prevent the ignition of vapors from the tank, and the second consideration is to protect the building and its occupants or contents from damage by a tank fire. As a protective measure, provide all aboveground tanks with some form of emergency relief venting for fire exposure in accordance with NFPA 30. In the following, it is assumed that all tanks are constructed or equipped so that the maximum internal pressure in a fire exposure will not exceed 2.5 psi (17 kPa). Recommended minimum distances for aboveground tanks from buildings and property lines are as follows:

a) Tanks, all sizes and types, containing petroleum fuels with a flash point less than 100 ºF (38 ºC) - 100 feet (30 m) or one tank diameter, whichever is greater.

b) Tanks containing petroleum fuels with a flash point of 100 ºF (38 ºC) or greater in accordance with the following:

Tank Capacity gallons (L)	Minimum Distance from Property Line or Nearest Building Feet (m)
275 or less (1040 or less)	5 (1.5)
276 to 750 (1041 to 2800)	10 (3.0)
751 to 12,000 (2801 to 45 400)	15 (4.5)
12,001 to 30,000 (45 401 to 113 500)	20 (6.0)
30,001 to 50,000 (113 501 to 189 000)	60 (18)
50,001 to more (189 001 or more)	100 (30)

8.3.6 Distance From Roadway, Railroads, and Power Lines. Minimum distances of storage tanks from adjacent roadways, railways, railroads, and electric power lines are as follows:

8.3.6.1 Underground Tanks

a) A minimum of 25 feet (7.6 m) from regularly traveled roads and highways, not including tank farm utility and fire access roads.

b) 25 feet (7.6 m) from railroad spur tracks not used for through traffic.

c) 100 feet (30 m) from main railroad tracks carrying through traffic.

d) 50 feet (15 m) from electric power transmission and distribution wires.

8.3.6.2 Aboveground Tanks

a) The greater of 100 feet (30 m) or one tank diameter from regularly traveled roads and highways, not including tank farm utility and fire access roads.

b) 50 feet (15 m) from railroad spur tracks not used for through traffic.

c) 200 feet (60 m) from main railroad tracks carrying through traffic.

d) 50 feet (15 m) from electric power transmission and distribution wires.

8.3.7 Interior Coatings. To extend the life of steel storage tanks, coat new tanks according to the following guidelines.

a) Vertical tanks

(1) Aviation, diesel fuel marine (DFM), additive, and lube oil tank interiors should be 100 percent coated, including floor, shell, and underside of the roof.

(2) Other products coat the floor, the underside of the roof, and bottom 40 inches (1000 mm) of the tank shell. Additional coating of up to 100 percent requires economic justification and Service Headquarters approval.

b) Coat all carbon steel piping, interior and exterior (inside of tank) and steel appurtenances inside all tanks.

c) Horizontal tanks coat the bottom 20 inches (500 mm) of the tank shell. For aviation tanks coat 100 percent.

8.3.8 Exterior Coatings

a) Protect the exterior surface of all aboveground steel tanks by coating in accordance with appropriate Service Headquarters requirements.

b) Protect the exterior surfaces of all underground horizontal steel tanks with a factory-applied coating specified in the appropriate guide specifications.

c) For concrete-encased tanks, with exterior steel containment, consider exterior fiberglass cladding for extremely corrosive atmospheres or seaside locations.

8.3.9 Fill Piping. Size the pipe so that the velocity does not exceed 12 feet (3.7 m) per second at maximum flow rate. Provide a means for reducing the velocity of flow to 3 feet (0.9 m) per second until the filling inlet nozzle is completely submerged and/or the floating pan has lifted off its legs. This may be done by a properly sized diffuser within the tank.

8.3.10 Vapor Emission Control Systems. Provide a vapor emission control system for tanks that store products having a true vapor pressure of 0.75 psia (5 kPa) or more and located in air pollution control areas in which the discharge of petroleum vapors is controlled or prohibited. Ensure that the system has sufficient capacity to control the vapor discharged from the tank vents at maximum filling rate in conformance with local air quality regulations. At a minimum, provide Stage I with piping for Stage II for all horizontal tanks storing gasoline. If required by local or state regulations, provide a complete Stage II system. If not required at time of construction, connect the Stage II piping to the tank and cap it at the dispenser.

8.3.11 Strapping Tables. Provide API MPMS 2 certified strapping tables for all tanks. Use 1/8-inch (2 mm) increments reading in gallons (litres). Provide electronic media data files. Determine strapping table volumes using physical measurements, not calculated values.

8.3.12 Product Recovery Systems. Provide pumps, piping, valves, and tanks to collect and store usable aviation turbine fuel which would otherwise become waste from operational or maintenance activities. Include a tank(s) to collect fuel/water mixtures from tank and equipment sumps, equipment drains, product saver tanks, high point vents, low point drains, and any other equipment from which fuel/water mixtures can be collected. Separate the fuel and water portions. Filter the fuel portion and return to bulk storage tanks. Do not discharge the water portion to surface water without additional treatment and permits or treat the water portion as wastewater. Refer to Section 2 of this handbook for information on handling of wastewater. Refer to Standard

Design AW 78-24-28. These systems are standard with the hydrant and aircraft direct fueling systems. In addition to the product recovery tank(s) for the facility, provide a product saver tank with electric pump for each vertical storage tank storing aviation turbine fuel. A product saver tank is a small (less than 100 gallons (380 L)) aboveground tank piped and valved to allow drawing water from the bottom of the storage tank and returning the product after the water has separated and been sent to the product recovery tank.

8.3.13 Registration. Register all tanks with the appropriate state and local agencies as required.

8.4 ABOVEGROUND HORIZONTAL STORAGE TANKS

8.4.1 General Design Considerations. If small factory-built aboveground storage tanks are required, use horizontal tanks. Limit tank diameter to 12 feet (3.7 m) or less and capacity to less than 1,200 barrels (191 m^3). Require tank to be of welded steel construction in accordance with UL 142. Steel tanks with steel outer wall containment are permitted if installed in conformance with NFPA 30 and local/state regulations.

8.4.2 Installation

a) Install the tank so that the bottom slopes downward toward one end at a slope of 1 percent. Locate transfer pumps or suction piping at the low end of the tank.

b) Provide protective bollards for tanks not surrounded by a dike.

c) Provide sumps, drain lines, and water drawoff lines in each tank. For aviation fueling systems, arrange piping so that the fuel in the tanks may be recirculated through the filter/separators.

d) Provide steel tanks with steel saddles or skids in accordance with UL 142. Limit the height of steel skids or saddles to 12 inches (300 mm) in height to avoid the need for fireproofing. Mount steel supports on a reinforced concrete foundation.

8.5 ABOVEGROUND SECONDARY CONTAINMENT (VAULTED) TANKS

8.5.1 General Design Considerations. When small aboveground storage tanks are required (250 to 12,000 gallon (900 to 45 000 L) capacity) and there are clearance or fire exposure problems and the additional cost can be justified, consider the use of concrete-encased storage tanks. The main advantages of vaulted tanks over the single wall steel tanks are that a separate dike (containment) may not be required and the vault system provides an added measure of fire protection. NFPA 30 and 30A have specific criteria for omitting dikes when using this type of tank. All of the criteria in the NFPA regulations for the appropriate application must be met before this type of tank is used without a dike. Additional benefits include added protection from ballistic and vehicular impact and reduced evaporation of volatile fuels in warm climates. Require tanks to be factory-constructed with a UL 142 welded steel primary tank, generally low profile and rectangular in design. Tanks may be used in applications where, in addition to the above considerations, construction of a separate dike for secondary containment purposes would have a negative impact on operations and/or aesthetics. Tanks located close to buildings or with integral fuel dispensers must be UL-listed secondary containment tanks, utilizing steel inner and outer tanks that can provide interstitial containment which is both pressure testable and verifiable. Such tanks usually have a fill of regular or insulating concrete. Ensure the two-hour fire rating meets or exceeds all requirements of NFPA 30A for “fire resistance” tanks, meets the requirements of ICBO UFC Articles 52 and 79, and provides a minimum 2-hour fire rating in accordance with ICBO UFC, Appendix Standard A-II-F and UL 2085.

8.5.2 Installation

a) For flammable liquid installations, require additional curbing containment based on tank filling rates if there is a chance of a fuel spill entering a critical area.

b) For applications not requiring secondary containment, such as residential heating oil tanks where aesthetics may be the prime concern, consider concrete encased, exposed aggregate, vault tanks with a UL 2085 secondary containment protected rating without the outer steel jacket.

c) For aviation turbine fuel applications, require a primary tank of stainless steel construction.

d) For applications other than aviation turbine fuel (500 gallons (2000 L) and above), coat the floor and lower 20 inches (500 mm) of carbon steel tanks with a service-approved coating. A primary tank of stainless steel can be allowed as an option to coated steel for all applications where economically justified.

e) Require a reinforced concrete slab foundation and slope tank to the water draw-off.

f) Require support channels with anchor holes for earthquake/hurricane restraint tie down.

g) Require steel to be a minimum thickness of 3/16-inch (5 mm) for the interior carbon steel tank.

h) Require protective bollards in traffic areas.

i) Require the tank to be pressure-tested after installation.

8.6 ABOVEGROUND VERTICAL STORAGE TANKS

8.6.1 General Design Considerations. Provide cylindrical single-wall steel aboveground vertical storage tanks meeting one of the following criteria (as approved by Service Headquarters):

a) Factory-fabricated tanks complying with UL 142 criteria. The diameter of the tanks is limited by transportation restrictions. Although these tanks are fabricated in sizes up to 1,200 barrels (191 m^3), they become quite tall due to the diameter limitation. Give special consideration to height/diameter ratio to ensure tank stability.

b) Field-erected tanks not requiring an internal pan follow API Std 650 configured as required by this handbook. Prohibit the use of exterior wind girders, unless required to meet abnormal local conditions.

c) Field-erected tanks requiring an internal pan comply with Standard Design AW 78-24-27. The standard design includes tanks ranging in capacity from 2,500 barrels (400 m^3) through 50,000 barrels (8000 m^3) with internal pan and requires site-adapting by the design team. For tanks larger than 50,000 barrels (8000 m^3), use the multicolumn API 650 design. Prohibit the use of exterior wind girders, unless required to meet abnormal local conditions.

8.6.2 Tank Roofs. For tanks with internal floating pans, design the roofs in conformance with Standard Design AW 78-24-27, which uses truss-supported cone roofs to eliminate columns in tanks less than 50,000 barrels (8000 m^3). For tanks larger than 50,000 barrels (8000 m^3), use an intermediate multicolumn (steel pipe as columns) roof support design.

8.6.3 Internal Floating Pans. Provide a honeycomb cell floating pan constructed of honeycomb aluminum for all aboveground vertical storage tanks storing Class I liquids or Class II mission critical fuels (e.g., JP-4, JP-5, JP-8, and diesel fuels used for shipboard readiness) or fuels with a true vapor pressure of 0.75 psig (5 kPa) or higher at operating temperature. Class I and Class II are as defined by NFPA 30. In the handbook, the term “internal floating pan” will be used to identify the specific type described herein. It is acknowledged that in API Std 650 and NFPA 11, “internal floating roof” is used in a broader sense.

a) Provide a seal between the internal floating pan and the tank shell. The primary and secondary seals should be a flexible wiper squeegee sealing device. This device should be attached in such a manner that they may be replaced manually from the top of the pan. The seals should be vapor mounted, function above the liquid level and be free draining without trapping liquid. Provide seals around all stationary devices which penetrate the internal floating pan. The type of seal should not damage the tank shell coating. Ensure the seal tightness complies with API 650 Appendix H, 40 CFR Subpart 60Kb, and State and local regulations, whichever is more stringent. The seal should be designed to accommodate plus or minus 4 inches (100 mm) of local deviation between the floating pan and tank shell.

b) For cone roof tanks with floating pans, provide roof vent/inspection hatches in the fixed roof and overflow port/vents near the top of the shell near a device(s) in the floating pan which is (are) sized by the manufacturer to evacuate air and gases from underneath the pan when the pan is on its supports during filling operations.

c) Provide grounding bonds between the floating pan and shell as follows:

(1) Two lengths of bare, 3/16-inch (5 mm) diameter, stranded, extra-flexible, stainless steel wire rope, each extending from the top of the floating pan to the underside of the fixed roof.

(2) Attach two of the wires near the tank periphery, 180 degrees apart. Attach the third wire to the floating pan manhole cover.

(3) Securely connect the wires to the pan and extend vertically to the tank roof. Ensure wires are accessible for inspection.

(4) Ensure wires are long enough to accommodate the full travel of the pan. Locate wires to miss all interior tank appurtenances and structure.

d) Provide antirotation cable in accordance with Standard Design AW 78-24-27.

e) For cone roof tanks with floating pans, provide gauge and sampling hatches as described for cone roof, except that on each hatch provide a gauge well which penetrates the floating roof through sealed openings and is arranged so that gauging and sampling can be accomplished from the top of the tank. Provide a separate well for ATG extending through the floating pan having the same datum plane as the manual gauge well. Provide full length slotted stilling well with internal floating seal and hand operated lifting winch. Construct stilling wells of aluminum or stainless steel for tanks storing aviation turbine fuels.

f) Provide a 36-inch (900 mm) diameter covered manhole in the floating pan.

8.6.4 Tank Bottoms. Slope the tank bottoms downward from the shell toward a sump at the center. A slope of 5 percent is required for positive drainage and self-cleaning action for tanks storing aviation turbine fuels. After the tank hydrostatic test, test the tank bottom by a helium leak detection identification method in accordance with the Air Force standard design prior to tank coating. Conduct all tests recommended by API Std 650.

8.6.5 Foundations. Design tank foundations on the basis of a soils exploration program including preliminary exploration as a minimum and detailed exploration and testing, if existing soil data is not available and/or inadequate. Refer to NAVFAC DM-7.01 and Army Corps of Engineers AEI. Analyze the results of the exploration program to determine the most practical and economical design to provide a stable foundation for the tank. See Facility Plate No. 014. As a minimum, use the following criteria for all tank designs:

a) Prevent external corrosion of tank bottoms by locating the tanks well above the general tank field grade, provide adequate tank field drainage away from the tank, and construct the foundation pad of clean, free-draining granular material. If sand is used, ensure a minimum electrical conductivity of 50,000 ohm-cm. Foundation material should be neutral or alkaline with a pH greater than 6.5, a chloride concentration less than 300 ppm, and a sulfate concentration less than 1,000 ppm as specified by API RP 651. The sand may be washed and the pH may be raised to meet the requirements. Include cathodic protection to prevent external corrosion of the tank bottoms. Do not use oil in the sand under the tank, unless local and state regulations concur with its use. Do not use dredge material or beach sand.

b) Provide good drainage under the tank.

c) Provide a reinforced concrete ringwall foundation and secondary containment. Locate the tank bottom a minimum of 12 inches (300 mm) above the dike basin.

d) Cover the area beneath the tanks with a dike fuel-impermeable liner complying with Standard Design AW 78-24-27 and meeting local and state requirements. Install all liners according to the manufacturer's requirements.

e) Over the liner, provide a minimum of 6 inches (150 mm) of compacted clean sand or similar material as described above. Securely attach and seal the liner to the inside of the concrete foundation ring wall beneath the tank shell.

f) Install pipe or pipes through the concrete foundation ring wall as a telltale for tank bottom leaks. These pipes will also permit water beneath the tank to escape by gravity. In addition, provide a leak detection system for the tank bottom.

g) Perform subsurface investigation in sufficient detail to determine if any compressible, weak, organic, or otherwise objectionable soils exist within a distance of two tank diameters below ground surface.

h) Estimate the magnitudes and rates of settlement (uniform, differential, and seismic induced) as part of the design. Provide adequate flexibility in piping, appurtenances, and other systems to accommodate anticipated settlements. Accomplish flexibility by using pipe offsets or ball joints. Do not use corrugated or bellows type expansion compensators. Do not exceed differential settlement values given in NAVFAC DM-7.01.

i) Where objectionable materials exist or magnitudes of anticipated settlement are sufficient to cause damage or unacceptable distortion, consider subsurface improvement. Potential improvement techniques may include removal of objectionable materials and replacement with clean compacted granular fill, preloading or surcharging in conjunction with drainage wicks, deep dynamic compaction, vibrocompaction, stone columns, compaction grouting, or similar techniques.

j) Where justified by subsurface conditions and economics, consider using deep foundations such as driven piling or drilled shafts. Design foundation in accordance with NAVFAC DM-7.02.

8.7 UNDERGROUND HORIZONTAL STORAGE TANKS

8.7.1 General Design Considerations. Where underground storage tanks of 1,200 barrels (191 m^3) or less capacity are required, use factory-built horizontal cylindrical double-wall

tanks (welded steel or fiberglass reinforced plastic (FRP)). Ensure that contract requires the design and installation in accordance with 40 CFR 280 or any more stringent state or local criteria. Require separation of exterior tank walls from the interior walls with standoffs, thus creating an open space, or interstitial, for monitoring of leaks. This is called a Type II tank. Do not exceed 12 feet (3.7 m) in diameter for tanks. Limit tank length to six times the diameter. Ensure that factory-fabricated tanks comply with UL 58 criteria.

8.7.2 Installation

a) Install tanks in accordance with NFPA 30 and also in strict accordance with the manufacturer's installation instructions.

b) Install the tank so that the bottom slopes downward toward one end at a slope of 1 percent. Locate transfer pumps and suction piping at the low end of the tank.

c) Provide straps and anchors designed to prevent flotation of tanks located in areas with high groundwater levels or subject to flooding. Provide electrical isolation strips between hold-down straps and metal tanks. Anchors may be a concrete anchor slab under the tank or concrete deadmen.

d) Place tanks on a uniform bed of homogeneous granular material at least 6 inches (150 mm) thick for steel tanks and 12 inches (300 mm) thick for fiberglass tanks. If a concrete anchor slab is used, place a minimum of 12 inches (300 mm) of bedding between the tank and the concrete anchor slab. Do not use blocks, chocks, or rocks.

e) Ensure that tank is installed by state-certified contractor if state has a certification program.

8.8 UNDERGROUND VERTICAL STORAGE TANKS. Cut and cover.

8.8.1 General Design Considerations. Underground vertical storage tanks are steel-lined reinforced concrete with an interstitial space and leak monitoring capability. These tanks may be completely buried, surface-constructed and then covered with embankment, or any variation in between; containment must be provided for the volume of the tank above

the ground level. They are only required in high threat areas within the explosive cordon area or clear zone, Europe, and the Pacific Region. They are not intended for use in the CONUS. Design underground vertical steel storage tanks in accordance with MIL-HDBK-1002/3, except as modified herein. These standards include tank sizes of 10,000 through 100,000 barrels (1600 m^3 through 16 000 m^3) capacity. In general, do not exceed 100,000 barrels (16 000 m^3) capacity. Alternative designs using prefabricated/pre-stressed tank sections must be approved by the appropriate Service Headquarters. For European/NATO, Pacific Air Force (PACAF), and CONUS projects, use the USAFE/NATO standard design, except use double wall design without fiberglass liner. Review host nation requirements to determine if deviations are required. Where circumstances, such as hillside installation, would permit gravity flow from the underground tank to the point of discharge, provide a gravity discharge connection. This option requires approval from the appropriate Service Headquarters and must include adequate means for stopping flow in emergency conditions such as fire, power failure, earthquakes, etc.

8.9 APPURTENANCES. Table 2 describes appurtenances for atmospheric storage tanks and identifies the type of tank to which they should be mounted. The following abbreviations are used:

V-A = Vertical Aboveground Storage Tank
H-A = Horizontal Aboveground Storage Tank
H-U = Horizontal Underground Storage Tank
C-E = Aboveground Concrete Encased Storage Tank
V-U = Vertical Underground Storage Tank

Full seal weld all tank attachments to prevent moisture/water from corroding the tank shell and attachments.

8.10 HEATERS

8.10.1 General Design Considerations. Provide tank heaters and controls for tanks intended for storage of high viscosity products, such as lube oils, or burner fuels No. 4, No. 5, and No. 6, in climates where the ambient tank temperature would be less than 20 degrees F (11 degrees C) above the fuel’s pour point temperature. Heat heavy burner fuel oils and lube oils

to a temperature of 20 degrees F (11 degrees C) above the fuel's pour point prior to pumping. Use one of the types of heaters listed below.

8.10.2 Heating Medium. Use the appropriate heating medium for the particular application based on temperature, pressure, and availability. Saturated steam is the preferred heating medium, but consider using hot oil, hot water, and electric heating where steam is not available from existing sources.

8.10.3 Convection-Type. Use convection-type heaters installed inside a storage tank and capable of passing through a 36-inch (900 mm) diameter manhole with a capacity to raise the temperature of a full tank of burner fuel oil approximately 60 degrees F (33 degrees C) in 24 hours. The appropriate Service Headquarters and/or DLA/DFSC will determine if the capacity of the heater could be reduced if it is not necessary to heat a full tank of fuel within 24 hours.

8.10.4 In-Line Type. In-line heaters consist of two general types: tank suction and straight tube. All in-line heaters are of the shell and tube construction. A tank suction or suction in-line heater is installed inside the tank on the tank issue line. The fuel oil enters the exchanger at the end within the tank and exits at the opposite end outside of the tank. The steam or other heating medium enters and exits the exchanger at the end outside of the tank. A straight tube or pipe in-line heater is installed directly into the pipeline. The fuel oil enters the exchanger at one end and exits from the other. The entry and exit points for the steam side can vary. The following criteria applies to in-line heaters:

a) Capable of heating fuel oil passing through them from the ambient tank temperature to a minimum of 20 degrees F (11 degrees C) above the fuel oil's pour point temperature at required flow rate.

b) If installed in tanks, allow removal of heater tube bundles without emptying the tank.

c) If multipass in-line heaters are used, do not allow the oil temperature rise to exceed 30 degrees F (17 degrees C) per pass.

d) Use carbon steel shells designed for a minimum 175 psig (1210 kPa) cold working pressure on both steam and oil sides.

e) Do not exceed 0.2 psig (1.4 kPa) for the pressure drop on the oil side of pump suction line nor exceed 10 psig (70 kPa) of pressure drop for heaters installed on pump discharge.

8.10.5 Insulation and Tracing. In cases where fuels are heated, examine the possible economic incentives for insulating heated storage vessels and piping. In many cases, piping carrying heated products must be heat traced to prevent possible solidification of the fuel during a shutdown period. Insulate traced lines. Consider possible incentives for installing a condensate collection and return system. If a condensate return system is installed, include a monitor to detect oil in the condensate.

8.11 TANK ENCLOSURES

8.11.1 General Design Considerations. Provide diked enclosures to prevent spilled petroleum from leaving the property for all aboveground tanks. Provide drainage structures to impound escaping fuel where rupture of an underground tank in a hillside location would endanger other activities and structures at elevations lower than the tank. Subdivide each diked area containing two or more tanks by intermediate curbs to prevent spills from endangering adjacent tanks within the diked area. Designer can take advantage of the exception granted for concrete-encased tanks by NFPA 30 or NFPA 30A if the provisions of that document are met and local and state regulations permit.

8.11.2 Capacity. Comply with NFPA 30 for capacity of diked enclosures except where NFPA 30 makes reference to volumetric capacity of tank or tanks, add volume for 5-year, 1-hour duration storm or one foot (0.3 m) freeboard, whichever is greater. Use local or state criteria if they are more stringent. Individual tanks larger than 10,000 barrels (1600 m^3) in capacity should be enclosed in an individual dike. Groups of tanks with 10,000 barrels (1600 m^3) or less capacity and not exceeding 15,000 barrels (2400 m^3) in aggregate capacity may be enclosed in a single dike. When subdividing is required, use intermediate dikes not less than 18 inches

(450 mm) in height. In appropriate environmental climates, consider snow and ice accumulation as well. Limit dike heights to 6 feet (1.8 m) or less.

8.11.3 Earthen Dikes. Construct dikes of earthen materials with reinforced concrete cover, if acceptable with state and local environmental regulations. Where space is a premium, earthen dikes are not the best choice. Make the minimum distance from the toe of the dike to the tank foundation 5 feet (1.5 m). Provide a flat surface on the top of the dike at least 3 feet (0.9 m) wide. Do not make slopes steeper than 1 vertical to 1-1/2 horizontal. Cover the sides and top of the dike and the basin floor around the tank with one of the following materials (see Facility Plate No. 020):

a) A minimum of 3 inches (75 mm) of concrete paving reinforced with woven wire fabric. Provide expansion and contraction joints as necessary. Ensure joint material is impervious to the fuel. If required by local or state regulations, provide a fuel-resistant sealer on concrete dike surfaces. As a minimum, spray concrete with a moisture sealant. Consider potential weight when sizing concrete and reinforcement.

b) A fuel impermeable liner. If liner is exposed, the exposed areas must be resistant to the effects of direct sunlight and to wind uplift. For covered liners, cover the liner with gravel or other suitable material. Follow the liner manufacturer’s recommendations for protecting the liner by the use of geotextile cover or other recommended means. Assume the covered liner is resistant to wind uplift. In either case, provide a hard surface for personnel access to the tank and for work areas around tank manholes and valves.

Table 2
APPURTENANCES

Item	Appurtenance	V-A	H-A	H-U	C-E	V-U
Manhole						
a	A 30-inch (750 mm) diameter manhole, a minimum of one manhole for tanks between 1,000 gallons (4000 L) and 5,000 gallons (19 000 L) capacity, and a minimum of two manholes (at least one 36 inch (900 mm), for tanks larger than 5,000 gallons (19 000 L) capacity.		✓	✓	✓	✓
b	A dedicated manhole, other than required above, as the primary point for piping penetrations into a tank (may be as small as 22 inches (559 mm)).			✓		
c	Containment sumps and extension manhole.			✓		
d	Roof manholes in accordance with API Std 650. A minimum of four 24-inch (600 mm) square inspection hatches on fixed roof tanks with floating pans and two hatches on all other tanks. Locate the roof manholes near the perimeter of the roof at opposite ends of a diameter and approximately 90☜ from the shell manholes.	✓				
e	Shell manholes in accordance with API Std 650. Two 36-inch (900 mm) shell manholes 180 degrees from each other. Align shell manholes parallel with prevailing wind direction. Hinge-mounted shell manhole covers.	✓				
f	A bolted cover in the roof for installation and removal of the internal floating pan as required by the tank supplier based on the pan manufacturer.	✓				
Ladder/Stairs						
g	Internal ladders (in accordance with OSHA criteria) for tanks of 5,000 gallons (19 000 L) or larger.	✓	✓	✓	✓	✓
h	An external ladder and platform with safety railing for gauging and sampling in accordance with 29 CFR 1910.23 (if height justifies it).		✓		✓	

LEGEND:

V-A = Vertical Aboveground Storage Tank
H-A = Horizontal Aboveground Storage Tank
H-U = Horizontal Underground Storage Tank
C-E = Aboveground Concrete-Encased Storage Tank
V-U = Vertical Underground Storage Tank

Table 2
APPURTENANCES

Item	Appurtenance	V-A	H-A	H-U	C-E	V-U
i	Ladders, railings, toeboards, a spiral stairway, top platform, and handrail in accordance with API Std 650 and OSHA requirements. Provide stairways to access high level shut-off and alarms.	✓				
Level Alarms						
j	An individual automatic level alarm system, independent of the gauging device or system for each tank. Include high, high-high, and low level alarms. On aboveground tanks: a manual tester for all floats to ensure system operability without a full tank; locate level alarm equipment for ready access from stairways and platforms; and high-level will be 95 percent and high-high will be 98 percent. For underground tanks, high and high-high will be 90 and 95 percent, respectively. Provide both audible and visible alarms. Set low level alarm such that air is not allowed into the system. In determining the low level, consider the time it would take for the pump or system to shut down. Review facility size and operating method to determine the most audible and visible location of alarms, usually in the tank farm and in the operations building. Connect to stop issue pump on low level alarm and receipt pump (if in facility) on high level alarm. Comply with most stringent of local, state, or federal regulations.	✓	✓ *	✓ *	✓	✓
Vents						

LEGEND:

V-A = Vertical Aboveground Storage Tank
H-A = Horizontal Aboveground Storage Tank
H-U = Horizontal Underground Storage Tank
C-E = Aboveground Concrete-Encased Storage Tank
V-U = Vertical Underground Storage Tank

Table 2
APPURTENANCES

Item	Appurtenance	V-A	H-A	H-U	C-E	V-U
k	Open atmospheric vents with weather hoods and bird screens for tanks to be used for products with true vapor pressure of 0.75 psia (5 kPa) or less. For higher vapor pressure, or if a vapor recovery system is used, provide pressure/vacuum vents in lieu of open vents. Consider using pressure/vacuum vents if product quality is at risk by blowing sand, dust, or snow. Comply with NFPA 30, host nation requirements, Section 2 of this handbook, API Std 650, API Std 2000, 29 CFR Part 1910.106, and Standard Design AW 78-24-27, where applicable. Do not use flame arrestors.	✓	✓	✓	✓	✓
l	Emergency relief venting with capacity in accordance with NFPA 30 and UL 142, as applicable. For vertical aboveground tanks, a weakened roof-to-shell seam, as specified in API Std 650, may be used to fulfill emergency relief requirements.	✓	✓		✓	✓
*NOTE: Because horizontal tanks will fill extremely fast in t he last 5 percent, values of high level alarm positions should be chosen based on filling rate, tank size, and time needed.						
Gauge/Gauge Hatch/Stilling Wells						
m	A liquid level gauge calibrated in 1/16-inch (2 mm) graduations mounted for eye-level reading from the ground.	✓	✓	✓	✓	✓

LEGEND:

V-A = Vertical Aboveground Storage Tank
H-A = Horizontal Aboveground Storage Tank
H-U = Horizontal Underground Storage Tank
C-E = Aboveground Concrete-Encased Storage Tank
V-U = Vertical Underground Storage Tank

Table 2
APPURTENANCES

Item	Appurtenance	V-A	H-A	H-U	C-E	V-U
n	Automatic Tank Gauging (ATG) for all tanks with fuel managed through the Fuels Automated System (FAS) (as described later in this section), that complies with API MPMS 3. Key features include: measures fluid level to ±0.05 inch (1 mm); measures standard volume ±0.1 percent; measures average product temperature ±1 ☜F (0.5 ☜C); measures product density ±1 percent; measures water level from datum plate ±1/4 inch (6 mm); converts volume to API standard conditions; local tank readout; provides backup alarms for high, high-high, low, and low-low level conditions; American Standard Code for Information Interchange (ASCII) interface.	✓	✓	✓	✓	✓
o	A 4-inch (100 mm) gauge hatch with drop tube to within 3 inches (75 mm) of the bottom of the tank.* A second 4-inch (100 mm) opening without a drop tube or gauge hatch.		✓	✓		✓
p	One 8-inch (200 mm) flange nozzle for ATG (planned or future) near the edge of the roof for ready access from the stairway platform.	✓				✓
q	One 8-inch (200 mm) gauge hatch for water bottom sampling, as close to the tank center as possible. See Plate No. 015.	✓				✓
r	One 8-inch (200 mm) gauge hatch with stainless steel, or fully coated, slotted stilling well extended to within 3 inches (75 mm) of the bottom of the tank* for gauging and sampling. A datum plate to establish a gauging zero point.	✓				✓
Piping Connection						
s	Inlet fill connection. See Plate No. 016, 018, and 019, as applicable.	✓	✓	✓	✓	
t	Main suction and low suction. See Plate No. 017.	✓				

LEGEND:

V-A = Vertical Aboveground Storage Tank
H-A = Horizontal Aboveground Storage Tank
H-U = Horizontal Underground Storage Tank
C-E = Aboveground Concrete-Encased Storage Tank
V-U = Vertical Underground Storage Tank

Table 2
APPURTENANCES

Item	Appurtenance	V-A	H-A	H-U	C-E	V-U
	Inlet fill pipe with horizontal exit perpendicular to a tank radial. Discharge is approximately 4 inches (100 mm) above tank floor and enlarged to reduce fuel velocity. An inverted trap is placed in the line to serve as a liquid lock to prevent entry of fire or an explosion from outside the fill pipe.					✓
* = Lowest point in the tank not the sump						
Overfill Protection						
u	Overfill protection with a hydraulically operated diaphragm control valve. Tanks connected to commercial pipelines or marine offload systems with restrictions on shut-off may require diversion to additional tankage. On aboveground tanks, ensure valve closes no later than on high-high level. For underground tanks, comply with NFPA 30 by automatically shutting off the flow into the tank when the tank is no more than 95 percent full. Comply with most stringent of local, state, or federal regulations. For Navy and Army systems, include a solenoid on the control valve to close the valve as a backup. Use API RP 2350 to establish the proper overfill level setting. On gravity drop fills, replace valve with an integral high level shut-off valve in the drop tube. Prior to designing automatic valve closure features, conduct a surge analysis on pressure filled systems. See Plate Nos. 018 and 019. * If pressure-filled.	✓	✓	✓ *	✓*	✓
v	A lockable, welded steel overfill protection box (15 gallon (60 L) minimum) and a manual drain valve to return spills to the inner tank (omit the drain feature on aviation turbine fuel tanks).				✓	

LEGEND:

V-A = Vertical Aboveground Storage Tank
H-A = Horizontal Aboveground Storage Tank
H-U = Horizontal Underground Storage Tank
C-E = Aboveground Concrete-Encased Storage Tank
V-U = Vertical Underground Storage Tank

Table 2
APPURTENANCES

Item	Appurtenance	V-A	H-A	H-U	C-E	V-U
Water Drawoff						
w	A 1-inch (25 mm) antifreeze-type, lockable, water drawoff valve with internal poppet at the low end of the tank, unless tank contains aviation turbine fuels with icing hibitors. In those cases, the water drawoff valve may be a ball valve.		✓			
x	Water drawoff connections. See Plate No. 017.	✓				
y	A 1-inch (25 mm) connection from the low end of the tank to approximately 3.5 feet (1.1 m) above the ground and equipped with a positive displacement-type, hand-operated pump for water drawoff. For Air Force projects, use electrical pumps only.			✓		
z	A water removal suction tube at low end of tank with connection for water removal by truck. Consider installing a fixed, hand-operated pump as an alternative.				✓	
	A central sump pump.					✓
Ball Joints						
aa	Ball joints on pipes to relieve strain caused by tank settling or seismic activity. Ensure that contract specifications do not allow piping connections to be made until after the tank has been completely tested and allowed to settle. As an alternative, settlement calculations can be made and piping flexibility can be designed to account for settling. In this case, pipe can be connected prior to testing. * May be required on tanks 25,000 gallons (94 600 L) and larger.	✓	✓ *			
Thermometer Wells						

LEGEND:

V-A = Vertical Aboveground Storage Tank
H-A = Horizontal Aboveground Storage Tank
H-U = Horizontal Underground Storage Tank
C-E = Aboveground Concrete-Encased Storage Tank
V-U = Vertical Underground Storage Tank

Table 2
APPURTENANCES

Item	Appurtenance	V-A	H-A	H-U	C-E	V-U
bb	Two thermometer wells (except on Air Force projects) in accordance with Standard Design AW 78-24-27 not more than 18 inches (450 mm) apart in each tank. For unheated tanks, provide a 5 inch (125 mm), bi-metallic, any-angle dial thermometer with 1-degree divisions and a range of 0 ☜F to 150 ☜F (-18 ☜C to 66 ☜C). The second well accommodates temperature-sensing bulbs for remote reading temperature systems or temperature control devices, which are to be provided only when specifically authorized by SERVICE HEADQUARTERS. Do not provide any thermometer wells in tanks with floating pans.	✓				
Cable Supports						
cc	On the fixed roof of all tanks, provide two scaffold cable supports in accordance with API Std 650. Locate the supports near the center of the tank so that supported cables will have maximum range and flexibility of operation with minimum interference with other tank fittings.	✓				
Striker Plates						
dd	Striker plates under all openings used for manual gauging in steel tanks and all openings in fiberglass tanks.	✓	✓	✓	✓	✓
Monitoring Port						
ee	A 2-inch (50 mm) monitoring port including a tube which provides a means to detect product leakage from the primary tank into the secondary tank.				✓	

LEGEND:

V-A = Vertical Aboveground Storage Tank
H-A = Horizontal Aboveground Storage Tank
H-U = Horizontal Underground Storage Tank
C-E = Aboveground Concrete-Encased Storage Tank
V-U = Vertical Underground Storage Tank

c) Within the dike wall, consider a hybrid, primary/secondary system for large area dike containments. The primary containment consists of a concrete work area around the tank, curbed with independent, curbed concrete drainage leading to the main dike area drain. Experience has shown that such an area could probably handle 99.9 percent of all spills. The surrounding secondary containment area would be made up of less expensive systems that would provide impervious containment in the rare event of a catastrophic tank failure but where the curbing would prevent smaller, more common type spills from reaching and causing cleanup/contamination problems. Secondary areas could be pea gravel/impervious liners or coated asphalt. The secondary contained area would also drain to the main dike collection drain and oil/water separator.

d) Do not use Bentonite or a Bentonite composite material in the construction of dikes or basins.

8.11.4 Reinforced Concrete Dikes. Design reinforced concrete (prefabricated or cast-in-place) dikes and their foundations to resist and contain the full hydrostatic load when filled to capacity. Consider the use of reinforced concrete blocks with or without exterior earth mounding. Use vertical reinforced concrete dikes where space is a premium. Seal all concrete surfaces with a flexible, UV-resistant, fuel-resistant coating if required by local or State regulations. As a minimum, spray all concrete surfaces with a moisture sealant.

8.11.5 Combination Dikes. A vertical concrete wall backed by an external earthen berm may be used. Design the combined earthen and concrete unit and its foundation to resist and contain the full hydrostatic load when filled to capacity. The dike floor could be either concrete or liner as described above.

8.11.6 Remote Containment/Impoundment Spill Collection Systems. As an alternative to dike enclosures, use a spill collection system consisting of a series of drains leading from storage tank areas to a remote containment or impoundment designed to prevent the accidental discharge of petroleum. This is not the preferred method and requires approval of Service Headquarters. Generally, this system is used for

tanks on a hillside. Use MIL-HDBK-1005/3, ICBO UBC 902, and BOCA F2315, as well as the following criteria for spill collection systems:

a) Construct the drains of petroleum-resistant, fire-resistant, impervious material.

b) Construct the impoundment as generally described for diked enclosures and make the volumetric capacity not less than 110 percent of the full content of the largest tank which is tributary to the drainage system. The containment must be able to contain the flow of the fire protection system for a period of 20 minutes.

c) Follow the requirements of MIL-HDBK-1005/3 and ensure the capacity of the drainage system and impoundment is sufficient to contain the storm runoff from the entire tributary area for rainfall from a 5-year, 1-hour duration storm.

d) Slope the area within the dike basin at no less than 1 percent to carry drainage away from the tank to a sump located at the low point of the enclosure.

e) Control drainage from the sump to the outside of the enclosure by a lockable knife gate valve with indicator post located outside of the enclosure in an area that will be safely accessible during a fire.

f) Do not allow fuel to run off or escape from the diked area under any circumstances. Provide means for treating or disposing of contaminated water from the dike to meet the most stringent of applicable federal, state, or local requirements.

8.11.7 Stormwater Collection Systems. Design a stormwater collection system to contain, transport, treat, and discharge any stormwater that collects in the tank enclosure. Refer to Section 2 of this handbook for information on design and sizing of oil/water separators. Review state and local regulations for design requirements and permitting of stormwater treatment systems.

8.11.8 Dike Access. Provide concrete, steel, or aluminum steps with pipe handrails for passage across a dike. Steps and handrails must comply with 29 CFR 1910.36. Include a removable section of the handrail to provide access to the flat top of earthen dikes. If steel steps are used, they should be hot-dipped galvanized after fabrication. Provide enough access locations for safe emergency egress and for normal operation. This will normally include steps over the dikes separating adjacent tanks, as well as on one wall without an adjacent tank. Locate steps at the most accessible points, preferably on the same side as the access stairs to a tank roof. For tanks over 50,000 barrels (7900 m^3), consider providing earth-filled ramps to permit passage of vehicles over the dike. In such cases, provide a concrete paved road or other means of providing vehicle travel-ways. A removable steel bulkhead section may be a cost-effective method to provide access for dikes with vertical reinforced concrete walls.

8.12 MISCELLANEOUS USE TANKS. This section provides design guidance for small miscellaneous use tanks. These tanks are typically less than 550 gallons (2100 L) in capacity. Check state and local regulations before beginning design.

8.12.1 Installation. Install the tank in conformance with the requirements of NFPA 30. The exception allowed for the deletion of dike containment is acceptable if all of the criteria associated with that exception are met. Provide containment for all tanks, regardless of size, except small residential heating oil tanks, by complying with Paragraph 8.11 of this handbook or by using properly installed aboveground concrete-encased tanks in accordance with Paragraph 8.5 of this handbook.

8.12.2 Heating Oil Tanks. Comply with NFPA 31.

8.12.3 Emergency Generator Fuel Tanks. Comply with NFPA 31, NFPA 37, and NFPA 110.

8.12.4 Fire Pump Fuel Tanks. Comply with NFPA 20, NFPA 30, and NFPA 31.

8.12.5 Waste Oil Tanks. Check local and state environmental regulations for any additional requirements for storage of waste oil.

8.12.6 Containment. As discussed previously in this section, provide containment, under and around all aboveground tanks except home heating oil tanks.

8.12.7 Underground Tanks. Ensure all underground tanks are double-walled and have overfill protection, as described previously in this section.

8.13 SHIPBOARD OFF-LOAD FUEL STORAGE TANKS

8.13.1 Function. In addition to regular storage, consider a storage tank for fuel removed from ships that may be off-specification or otherwise not satisfactory for its intended use. This fuel may be downgraded to heating oil or diesel fuel marine.

8.13.2 General Design Considerations. Determine the volume requirements of the contaminated fuel storage tank by an activity survey. Provide bottom-loading facilities for tank truck loading and off-loading of contaminated fuel.

8.13.3 Locations. Locate the contaminated fuel storage tank(s) in or near the facility tank farm. Clearly mark the tank(s) as to the type or grade of fuel.

8.14 JET ENGINE TEST CELL FUEL STORAGE TANKS. Design jet engine test cell fuel storage and issue systems to the same standards as ready issue fuel systems (e.g., high level alarms, gauging, shut-offs, etc.). Normally, tanks are refilled using station aircraft refueling trucks through aircraft single-point refueling adaptors.

8.15 FUELS AUTOMATED SYSTEM. The FAS is an Automated Information System (AIS) designed to support the DFSC and the Military Services in performing their responsibilities in fuel management and distribution. FAS is a multi-functional AIS which provides for point of sale data collection, inventory control, finance and accounting, procurement, and facilities management. FAS is composed of an integrated set of COTS software applications, based around an oracle RDBMS, which is

hosted on commercially available computer hardware. The system will provide interfaces to existing logistics/financial AIS’s or to be used only when directed by DLA/DFSC.

Section 9: PIPING SYSTEMS

9.1 INTRODUCTION. This section provides guidance for the design of the piping portions of fueling systems, as discussed in other sections of this handbook. The criteria provided is intended to be general in scope except where specific criteria is necessary for given situations.

9.1.1 Design Requirements. Ensure that piping design, materials, fabrication, assembly, erection, inspection, and pressure tests for fuel piping systems are in accordance with ANSI/ASME B31.3 and/or ANSI/ASME B31.4, as applicable according to the application. Follow appropriate guide specifications for piping design and materials selection. Use the following design criteria for piping systems:

a) Unless otherwise specified by Service Headquarters, provide underground piping systems in and around areas subject to aircraft ground movements. If approved by Service Headquarters, install piping in concrete trenches. When trenches are employed, comply with NFPA 415. The use of common trenches for more than one utility is prohibited. Fueling equipment may be aboveground where it does not interfere with aircraft or service vehicle movements. Design all clearances in accordance with MIL-HDBK-1021/1, MIL-HDBK-1021/2, and Standard Design AW 78-24-28.

b) In other cases, aboveground piping is preferred where it is not aesthetically objectionable or not exposed to accidental damage, vandalism, blast damage, or sabotage.

c) The preferred method of routing aboveground piping out of a diked area is over the top of the dike. However, avoid creating an inverted “U” on the suction side of a pump to avoid an air trap.

d) Hydrostatically test new piping systems in accordance with API RP 1110. During testing, disconnect system components such as storage tanks or equipment which were not designed for the piping test pressure or protect them against damage by over-pressure. Hydrostatically test systems to the lesser of 1.5 times the operating pressure or 275 psig (1900 kPa) maximum. Test hydrant and direct aircraft fueling systems and installation fuel pipelines with fuel. For all

other systems, test with water. Ensure that all water is removed from piping by either pigging the lines or subsequent flushing with fuel.

e) Lay out piping between piers and storage tanks, cross-country pipelines, and between bulk storage and operating tanks to accommodate pigging operations. Use long radius heads, full port valves, and provisions for the connection of temporary launchers and receivers. Refer to Corps TM 5-803-7 and AFMAN 32-1013 for design guidance. Give special consideration to smart pigging for single wall pipelines.

f) When laying out piping for single wall A/C hydrant systems, consider smart pigging/pigging in the design. For systems with required piping slopes and high and low level drains, provide long radius turns, and provide spool pieces for temporary pig launchers and receivers. Ensure valves are accessible for removal and replacement with spool pieces. Where it is more economical or practical to lay hydrant piping flat (slope less than .2 percent), provide the capability to rapidly clean the lines with a pig or to launch a smart pig. This includes providing long radius turns, full port valves, and pig launchers and receivers.

g) Refer to Corps TM 5-852 series for construction of aboveground and underground piping in arctic and subarctic conditions.

9.1.1.1 Hydraulic Design. In general, provide a hydraulic design with a velocity of 7 to 12 feet per second (2.1 to 3.7 m/s) on pump discharge and 3 to 5 feet per second (0.9 to 1.5 m/s) on pump suction at full flow. If project-specific conditions make it advisable to exceed these values, consult the appropriate Service Headquarters. Design suction piping to ensure that the net positive suction head required by the pumps is available under all conditions of operation. Consider the following factors in selecting pipe sizes:

a) Operating requirements of the facility to be served.

b) Capital cost of the pipe.

c) Capital cost of pumping stations and attendant facilities.

d) Operating cost of the system.

e) Harmful effects of excessive velocity of flow including hydraulic shock and static generation.

f) Fatigue failure caused by cyclic loading.

9.1.2 Piping Arrangement. Wherever possible, arrange piping in parallel groups to facilitate multiple use of supports, to minimize the amount of trenching for underground piping, and to minimize the number of steps or stiles needed across pipe runs. For underground applications, consider constructability when determining amount of spacing between pipes. Use the following criteria:

a) Provide looped piping systems whenever practical. Loops add to the flexibility and reliability of the system, contribute to product cleanliness by making circulation possible, and can be used to reduce the magnitude of hydraulic shock. Sectionalize loops by double block and bleed valves to provide verifiable isolation and to facilitate pressure testing.

b) Between mains, install cross connections for flexibility of operation and as an auxiliary means of continuous operation in emergency situations. In addition, permit the use of line blinds where space limitations preclude the use of removable pipe sections or fittings. Provide a separate piping system for each grade of fuel to be handled. Do not provide cross connections between grades.

c) For short runs, provide a line slope of at least 0.2 percent. For long runs, make line slope sufficient to establish positive drainage by gravity, but without excessive bury depth. Make gradients uniform between high and low points. Traps are undesirable because they provide a place for water and sediment to accumulate. Install drains at low points to allow removal of any water from condensation. These low point drains also provide the capability to remove fuel for line maintenance. If slope is not possible, design the system to accommodate pigging by providing flange connections

for pig launchers/receivers, long curvature fittings, and full port valves. Install high point vents to remove trapped air. Low point drains are not required on interterminal pipelines.

9.1.3 Surge Analysis. Conduct a complete surge analysis of system operation using a computer simulation program for all systems with quick closing valves and for aircraft hydrant and direct fueling systems with more than two outlets. Give full consideration to the causes and effects of hydraulic shock. This is especially important in closed fueling systems such as aircraft fueling systems where the receiving tanks or dispensing equipment may be damaged by shock pressure. Reduce the possibility of shock by limiting flow velocity and avoiding the use of quick opening/closing valves except where required for system operation such as hydrant pit valves. Every reasonable effort must be made to control hydraulic surge or shock within acceptable limits by the design of the piping system rather than by the use of surge suppressors. Surge suppressors are strictly a last resort solution and require the approval of Service Headquarters prior to designing into a system. For all aircraft direct fueling/hydrant system designs, the loop backpressure control valve is critical in preventing excessive hydraulic shock. Use the following design criteria:

a) For all complex piping systems (main header, several laterals, mobile equipment), employ computer modeling techniques to determine if surge suppression is required. Conduct a run at steady state flow conditions to establish system flow rates for the scenario being modeled. After that, conduct a transient surge analysis imposing worst-case operating conditions on the system. For hydrant systems incorporating the use of a back pressure control valve, simulate this valve as an active modulating valve. If acceptable peak pressures are exceeded, discuss the results with the Service Headquarters fuels engineer to review parameters used and consider alternatives. If this consultation produces no workable solution, perform a second surge analysis to model the use of surge suppressors in the system. This analysis must indicate that damaging peak pressures are not exceeded. Do not use manual surge calculations, except as found under (c) below, because they do not account for dampening effects of the system and yield overly conservative results.

b) Most systems designed in accordance with this manual will have ANSI Class 150 flanges and a maximum allowable working pressure of 285 psig (2000 kPa) at 100 degrees F (38 degrees C) for carbon steel and 275 psig (1900 kPa) at 100 degrees F (38 degrees C) for stainless steel systems. This means that the total pressure including surge, pump shutoff pressure, and static pressure in any part of the system should never exceed those maximum allowable working pressures. Other equipment items such as tank trucks, aircraft fuel tanks, or shipboard fuel tanks which may be damaged by shock pressures may require lower maximum surge pressure. Assume a near instantaneous shut-off by the aircraft in the design of aircraft hydrant systems.

c) Do not use manual calculations instead of computer modeling when system surge pressures are crucial and the piping system is complex. However, for simple piping systems that operate under 80 psi (550 kPa), use the following calculations to ascertain if surge is a problem:

(1) Determine the critical time of the system. This is defined as the time it takes for the first increment of the pressure wave to travel upstream, reflect, and return to the valve. Use the following equation:

EQUATION: $T_C = 2L/a$ (1)

where:

T_C = critical closure time of system(s)
L = length of pipe (ft or m)
a = surge pressure wave velocity (fps or m/s)

Values for “a” for liquid petroleum in schedule 40 steel pipe are as follows. These values are based on hydrocarbons with a specific gravity of 0.8 at a temperature of 68 degrees F (20 degrees C):

Nominal Pipe Size inches (mm)	Surge Pressure Wave Velocity, "a" ft/s (m/s)
2 (50)	3,771 (1149.4)
3 (75)	3,763 (1147.0)
4 (100)	3,736 (1138.7)
6 (150)	3,692 (1125.3)
8 (200)	3,663 (1116.5)
10 (250)	3,639 (1109.2)
12 (300)	3,599 (1097.0)

(2) If valve closure time (T) is less than T_C, it is equivalent to instantaneous closure and will result in maximum surge pressure. The equation used to calculate surge pressure rise for this situation is:

EQUATION: $P_1 - P = [(V_1 - V_0) \times w \times a]/(C \times g)$ (2)

where:

P_1 = maximum pressure (psig or Pa)
P = pump shutoff pressure (psig or Pa) (equal to system static pressure)
V_1 = initial velocity (fps or m/s)
V_0 = final velocity (fps or m/s)
w = specific weight of the fluid (lbm/ft^3 or kg/m^3)
g = gravitational constant ($32.2\ ft/s^2$ or $9.81\ m/s^2$)
C = unit constant ($144\ in^2/ft^2$, $0.101\ (kg/m^2)/Pa$
a = surge pressure wave velocity (fps or m/s)

(3) For example, a fuel storage facility has a truck loading rack located 2,000 feet (610 m) away. The load rack is fed by a 600 gpm (38 L/s) pump located at the storage facility. The load rack is equipped with a deadman apparatus which is tied to a hydraulically operated diaphragm control valve at the rack. The valve has a closure time of 1.0 seconds. The pipe is 6-inch (150 mm) diameter carbon steel, Schedule 40, with Class 150 flanges. The pump shutoff pressure is 60 psig (410 kPa). Find the critical time of the system if the loading rack control valve closes.

$T_C = 2L/a = 2\times2{,}000/3{,}692 = 1.08$ seconds

From the table of values for “a”, the surge pressure wave velocity (a) is 3,692 fps (1125.3 m/s). The maximum pressure in any pipeline occurs when the total discharge is stopped in a period of time equal to or less than the critical time. Since the valve will theoretically close prior to this, Equation (2) should be used to determine the pressure rise. In this case, the final velocity (V_o) will be assumed to be zero because the critical time is greater than the valve closure time.

$P_1 - P = (V_1\times w\times a)/(144\times g)$
$= (6.81\times51.5\times3{,}692)/(144\times32.2) = 279$ psig (1925 kPa)

$P_1 = P+273 = 60+279 = 339$ psi (2337 kPa)

Initial velocity (V_1) was found by dividing the given flow rate of 600 gpm (38 L/S) by the cross sectional area of the 6-inch (150 mm) diameter, Schedule 40 pipe. Considerations will have to be made for this system to deal with the maximum predicted pressure.

(4) When the valve closure time is longer than the critical time, the surge will be less than predicted by Equation (2). The equation used to calculate surge pressure rise for this situation is:

EQUATION: $P_1 - P = [2\times L\times w\ (V_1 - V_C)]/(C\times g\times T^{1.3})$ (3)

where:

P_1 = maximum pressure (psig or Pa)
P = pump shutoff pressure (psig or Pa) (equal to system static pressure)
L = length of pipe (ft or m)
V_1 = initial velocity (fps or m/s)
V_C = velocity at T_C (fps or m/s)
w = specific weight of the fluid (lbm/ft^3 or kg/m^3)
g = gravitational constant ($32.2\ ft/s^2$ or $9.81\ m/s^2$)
C = unit constant ($144\ in^2/ft^2$, $0.101\ (kg/m^2)/Pa$
a = surge pressure wave velocity (fps or m/s)
T = valve closure time (sec)

Determination of V_C is too complex for simple calculation. Therefore, for the conditions where $T > T_C$, use a computer modeling program.

9.2 ABOVEGROUND PIPING. Support aboveground piping so that the bottom of the pipe is a minimum of 18 inches (450 mm) above the ground surface or higher if required to service valves and equipment. In areas subject to flooding, greater clearance may be desirable. At intersections with roadways, allow enough clearance for the passage of tank trucks, cranes, and similar heavy vehicles. In areas subject to seismic activity, provide the piping configuration and support in accordance with the seismic design criteria in Army Corps of Engineers TI 809-04, Seismic Design for Buildings. Refer to Corps TM 5-852 series for considerations in extremely cold climate. Wherever possible, arrange piping in parallel groups to facilitate multiple use of supports, to minimize the amount of trenching for underground piping, and to minimize the number of pipe stiles needed. Consider constructability and maintenance in spacing of piping.

9.2.1 Identification. Identify piping in accordance with Section 2 of this handbook. In addition, mark fuel lines at head of fueling pier near valves.

9.2.2 Pipe Supports. Rest piping on supports, both insulated and uninsulated, on a steel shoe welded to the bottom of the pipe. Leave the shoe free to move on the support. Construct the portion of pipe supports in contact with the ground with concrete. Facility Plate Nos. 021 and 022 show the design of typical “slide/guide” pipe supports. Ensure that support material is the same as the pipe material. Do not weld a shoe to Schedule 10 stainless steel pipe. Other support configurations are acceptable provided the support does not contain rollers and does not allow movement of the pipe on a metal surface. Design pipe supports to meet the applicable requirements of ANSI/ASME B31.3 or ANSI/ASME B31.4.

9.2.3 Arrangement. Arrange pipes to provide for expansion and contraction caused by changes in ambient temperature. Where possible, accommodate expansion and contraction by changes in direction in piping runs, offsets, loops, or bends. Where this method is not practical, use flexible ball joint offsets. Provide sliding pipe supports or other method of maintaining alignment on each side of the expansion joint. Do

not use expansion devices which employ packings, slip joints, friction fits, or other non-fire resistant arrangements. Use ball-type offset joints to accommodate possible settlement of heavy structures such as storage tanks, if piping design cannot provide enough flexibility. Design expansion bends, loops, and offsets within stress limitations in accordance with ANSI/ASME B31.3 and ANSI/ASME B31.4.

9.2.4 Anchors. Anchor aboveground piping at key points so expansion will occur in the desired direction. Anchors and guides may also be required to control movement in long runs of straight pipe or near a connection to fixed equipment such as a pump or filter. See Facility Plate Nos. 023 and 024. Space anchors to provide maximum amount of straight runs of piping from expansion points to the anchors. In general, place anchors at all points of the system where only minimum piping movement can be tolerated, such as at branch connections and equipment connections. Key locations are pump houses or other buildings, manifolds, at changes of direction if not used as an expansion joint, at points where the pipe size is drastically reduced related to adjacent piping, and at all terminal points. Limit the use of anchors to the situations described above. Where an anchor is welded directly to a pipe, ensure that the anchor material is compatible with the pipe material. Do not allow welding of Schedule 10 stainless steel pipe to an anchor.

9.2.5 Relief Valves. Provide relief valves to relieve excessive pressures caused by thermal expansion of the liquid in the pipe between shutoff points. The coefficient of expansion of liquid petroleum in the range of 35 degrees to 60 degrees API (0.8498 to 0.7389) at 60 degrees F (16 degrees C) is 0.0005 inch per inch per degree F (0.0009 mm per mm per degree C). Provide line valves with relief valve bypasses to relieve increased pressures caused by solar or other heating of static fluids in closed-off pipe segments and equipment. For remotely controlled valves, located where excessive bonnet pressure can develop when in the closed position, provide relief valves on the bonnets. Ensure relief valves do not discharge to grade or to a stormwater drainage system. A relief valve should ideally discharge directly into a storage or holding tank at atmospheric pressure. Alternatively, any relief valve may be connected to discharge to tankage through one or more successive adjacent pipe segments. Use extreme care when following this method to verify that the total

relief pressure created by the additive effect of these delta pressure-type valves does not exceed the maximum pressure rating of the system component with the lowest pressure rating. See Facility Plate Nos. 026 through 029. If the additive effects of cascading pressure relief valves produce excessive pressure, consider using a series of ball check valves around each shutoff valve to relieve thermal expansion back to storage. For any isolated pipe segment on which the relief valve discharge cannot be connected as described above, provide a vented aboveground or below ground sump tank of suitable capacity which is equipped to be emptied by means of a portable pump. Equip the sump tank with self-checking high level alarms and containment. Provide valves used for relief of thermal expansion of not less than 3/4-inch (20 mm) nominal pipe size. Require valves to be set to open at a pressure approximately 10 percent above the operating pressure of the line. Use a ball valve with handle removed on both inlet and outlet sides. Provide visual sight glass downstream of all pressure relief valve piping discharging to a recovery tank or a return line. Locate relief valves and sight glass between ball valves with removable handles.

9.3 UNDERGROUND PIPING. Provide underground piping which passes under public roadways or railroad tracks in accordance with Department of Transportation regulations 49 CFR 195 and API RP 1102. Refer to Section 2 of this handbook for corrosion protection and for environmental protection. Before installing underground pipelines, review all local, state, and federal regulations for double wall pipe, leak detection, and corrosion protection requirements.

9.3.1 Depth of Cover. Use the following criteria for depth of cover over buried fuel pipelines:

a) Locate top of lines below design frostline and at a minimum of 3 feet (0.9 m), except that less cover is permissible for occasional stretches where overriding conditions exist, such as the need to pass over a large culvert or beneath drainage ditches. At such locations, build sufficient slack into the line to allow for vertical and lateral movement due to frost heave. Refer to Corps TM 5-852 series for additional guidance. Protective measures, such as the installation of reinforced concrete slabs above the pipe, may also be required where depth is less than required under Paragraph (b) below.

b) Subject to Paragraph (a), provide minimum depths in accordance with 49 CFR 195. Under roadways and shoulders of roadways, provide a minimum depth of 4 feet (1.2 m).

9.3.2 Parallel Pipes. Provide a minimum clearance of 12 inches (300 mm) between the outer wall of any buried pipe and the extremity of any underground structures including other underground pipe. In areas where multiple utilities are routed in the same area (e.g., a utility corridor), make sure electrical and communication ducts/conduits are kept a minimum of 36 inches (900 mm) from all other underground utilities especially fuel, steam, and high-temperature water pipes. Refer to ANSI C2, ANSI/ASME B31.4, and 49 CFR 195 for additional requirements. For pipes in concrete trenches, provide a minimum clearance of 6 inches (150 mm) between flanges and the trench wall and between adjacent flanges. If there are no flanges, provide a minimum of 8 inches (200 mm) between the pipe and the trench wall and between adjacent pipes within the concrete trench.

9.3.3 Casing Sleeves. Use steel casing sleeves only for those crossings where sleeves are required by authorities having jurisdiction, where it is necessary to bore under the roadway or railroad tracks to avoid interference with traffic, or where boring is the most economical construction method. When planning construction of open trench crossings, consider the economics of installing spare casing sleeves to eliminate excavating for future fuel lines. Ensure that the design isolates fuel-carrying pipes from contact with the casing pipes. Require a seal of the annular space at each end of the casing. Include a vent on the higher end of each casing. Locate crossings at a minimum depth of 36 inches (900 mm) beneath the bottom of drainage ditches. If this depth cannot be obtained, install above, but not in contact with, the casing or pipe, a 6-inch (150 mm) thick reinforced concrete slab of adequate length and width to protect the casing or pipe from damage by equipment such as ditch graders and mowers. Refer to API RP 1102 for additional information.

9.3.4 Line Markers. Except where prohibited by national security considerations, install line markers over each buried line and allow for maintenance provisions in accordance with 49 CFR 195.

9.3.5 Warning Tapes. Provide buried warning tape for all underground pipelines as required by the appropriate guide specification.

9.3.6 Double-Wall Piping. Provide double-wall piping for Ground Vehicle Fueling Facilities. For other applications, provide double-wall piping only when required by state or local regulations, or if specifically approved by DLA/DFSC.

9.3.7 Single-Wall Piping. As a minimum, for all single-wall buried pipe, provide capability for future monitoring by installing a perforated PVC pipe in trench with fuel pipe or with some other system approved by Service Headquarters. Provide 4-inch (100-mm) slotted PVC pipe in the same trench as the fuel pipe and no greater than 3 feet (0.9 m) above the top of the fuel pipe. Provide ASTM F758 pipe, type PS46 with circumferential slots 1/32 to 1/8 inches (0.8 to 3 mm) and not longer than 1-1/4 inches (32 mm) with maximum open area of 0.5 square inches/linear feet/1060 sq. mm/m). Wrap pipe in a geotextile of nonwoven pervious polymeric material with an apparent opening size (U.S. Sieve) of 70. Provide access riser with cup every 100 feet along perforated PVC pipe.

9.4 UNDERWATER PIPING. To receive fuel from offshore moorings, provide one or more underwater pipelines from the shore facility to the mooring. Limit the design of these systems to engineers with this type of experience.

9.4.1 Special Arrangements. At the mooring end of each pipeline, provide lengths of submarine fuel hose equal to 2.5 times the depth at high water. At the pipe end of the hose, provide a flanged removable section of hose 10 feet (3 m) long. At the free end of the hose, provide a steel valve with a marker buoy attached to a cable or chain which has sufficient strength and suitable fittings for the vessel to lift the hose and valve aboard.

9.4.2 Connections. Lay out multiple fuel lines and connections so that they correspond to the layout of the ship’s discharge manifold.

9.4.3 Unique Considerations. In piping design, consider fuel characteristics as they may be affected by the sea water temperature, particularly in cold water. For diesel fuel, aviation turbine fuel, or other light fuels, small individual lines are preferable as follows:

a) Minimum nominal pipe size of 6 inches (150 mm).

b) For transfers of fuels exceeding 3,000 gpm (189 L/s), use 12-inch (300 mm) to 16-inch (400 mm) diameter pipe.

c) Instead of pipes larger than 16 inches (400 mm) in diameter, consider using two smaller pipes.

d) At an accessible upland location, as close to the water entry as practical, provide a double block and bleed valve and a manually operated check valve or bypass to allow reversal of flow when required.

e) Provide a dependable means of communication between the vessel in the offshore berth and the shore facility.

9.4.4 Corrosion Protection. Wrap, coat, and cathodically protect underwater pipelines in accordance with Section 2 of this handbook.

9.4.5 Depth of Burial. Provide sufficient burial depth of underwater pipelines to prevent damage by dredging of the waterway, by ships' anchors, trawls, or by scouring action of the current. Specifically, ensure depth conforms to the requirements of 49 CFR 195. Where lines cross ship channels or anchorages, ensure the top of the pipe is at least 12 feet (3.7 m) below the theoretical, present or planned future bottom elevation, whichever is deeper. Recommended backfill in such areas is 2 feet (0.6 m) of gravel directly over the pipe, followed by stones weighing 50 to 60 pounds (23 kg to 27 kg) up to the bottom elevation.

9.4.6 Pipe Thickness and Weight. Provide sufficient pipe wall thickness to keep stresses due to maximum operating pressure and other design loads within design limits. Include full consideration to extra stresses which may occur in laying the pipe. It is common practice to use heavier wall pipe for water crossings of more than 200 feet (60 m) from bank to bank

at normal water level. This affords greater stiffness and resistance to buckling during handling of the assembled crossing pipe and requires less weighting material to obtain the necessary negative buoyancy to keep the line in place while empty or containing a light product. Reinforced sprayed-on concrete is an acceptable weighting material. Hydrostatically test assembled crossing pipe before placing, unless crossing pipe is too long for prior assembly in one segment. In this case, separately test each segment as described.

9.5 PIPING MATERIALS

9.5.1 Non-Aviation Systems. Use carbon steel piping material for interterminal pipelines (regardless of product) and for all portions of non-aviation turbine fuel systems, except FRP may be used for underground pipe (not in concrete trenches) in ground vehicle fueling facilities. The appropriate service guide specification includes the necessary requirements.

9.5.2 Aviation Systems. For new systems, use stainless steel or aluminum piping downstream of the last issue filter/separator. Limit aluminum to aboveground pipes of 12 inches (300 mm) or less nominal pipe size. Give special consideration to the pressure rating of both the pipe and fittings to ensure adequacy to accommodate surge pressure. Do not allow copper, copper alloys, light metal alloys containing more than 4 percent copper, zinc or zinc alloys, cadmium, or lead or lead alloys in components exposed to the fuel. Brass hose couplers are permitted. Metals are restricted to protect the thermal stability property of aviation turbine fuels. See Facility Plate No. 025 for piping material options.

9.6 WELDING CRITERIA. Ensure that the contract requires welding and welding inspections in accordance with appropriate guide specifications and/or standard design. Use 100 percent radiographed weld joints meeting the standards for severe cyclic service contained in ANSI/ASME B31.3 for piping downstream of the pump in hydrant systems. For all other underground steel pipes, use 100 percent radiographed weld joints meeting the requirements of ANSI/ASME B31.4.

9.7 PIPING CONNECTIONS

a) For steel piping systems, use weld neck forged or rolled steel flanges with raised faces having a modified spiral serrated gasket surface finish.

b) Do not use cast iron flanges.

c) Do not use grooved pipe type couplings or similar fittings in permanent fixed piping systems.

d) Do not direct bury flanges, valves, mechanical couplings, threaded fittings, or any mechanical equipment. If they must be used in an underground system, enclose them in an accessible pit.

e) Use welded connections for joining steel pipe. Use flange connections for joining pipe to equipment. Use threaded connections only where unavoidable such as on differential pressure gages, pressure snubbers, and fuel sample points.

f) In steel piping systems, use socket weld joints on 2-inch (50 mm) diameter nominal size and smaller pipe.

g) Make branch connections with butt welded tees except where the branch is at least two pipe sizes smaller than the run, in which case the branch connection can be made with a forged or seamless branch outlet fitting, which is designed in such a way that the connection can be radiographed.

h) Do not use wrinkle bends or mitered bends for changes in direction.

i) Do not use threaded joints in aluminum piping systems.

j) Except for unions and control tubing couplings, do not use threaded joints in stainless steel systems. Socket-weld stainless steel drain, vent, and pressure relief valve lines 2-inch (50 mm) in diameter or less. If aboveground, flanges may be used.

k) Join glass FRP piping by bell and spigot joints sealed with adhesive, except use FRP flanges for connections to flanged equipment such as pumps or valves. Ensure that no loading can be transferred from steel piping to FRP piping.

l) Make fittings and flanges for aluminum piping of the same material as the pipe.

9.8 INTERIOR PIPE COATINGS. To protect aviation fuel quality and extend the life of the piping, minimize bare carbon steel piping (except interterminal pipeline) which comes in contact with aviation turbine fuels especially downstream of initial filtration equipment and maximize the use of internally coated pipe. This is not intended to allow the use of lined carbon steel piping as a substitute for areas requiring non-ferrous piping. Comply with other paragraphs of this section for material selection. Interior pipe coating is not required on non-aviation piping except for carbon steel piping within the lower 36 inches (900 mm) of aboveground vertical storage tanks, and ballast lines on piers.

9.9 EXTERIOR PIPE COATINGS

a) Protect the exterior surfaces of all underground steel piping systems with a continuously extruded polyethylene coating system.

b) Protect the exterior surfaces of all aboveground carbon steel piping systems by coating in accordance with applicable service requirement.

c) Coat underwater piping with the same materials used for underground piping.

9.10 SAMPLING FACILITIES. Provide connections for sampling fuels on each section of a fuel transfer piping system. Install sampling and testing connections at receiving points, tank outlets, inlet and outlet sides of filter/separators and fuel monitors, all fuel dispensing points, and between block valves so that the remaining fuel in each portion of a fuel transfer pipeline can be sampled. Where possible, install sampling connections in vertical runs. Provide a 1/4-inch (6 mm) diameter sample point with a probe, ball valve, and quick disconnect with dust cap.

Section 10: ALTERNATE POL FACILITIES

10.1 INTRODUCTION. This section provides guidance for design of alternate POL facilities. The alternate fuels discussed are: LPG, CNG, hydrazine, and OTTO fuel. This section contains information on products which are unique. Therefore, some special considerations are discussed, in addition to information provided in Section 2, General Design Information, which contains important information on fueling facilities. Do not start the design of any fueling system without first becoming completely familiar with Section 2 of this handbook.

10.2 LIQUEFIED PETROLEUM GAS (LPG)

10.2.1 Uses. The uses for which LPG fuel is procured and the methods of transportation of the fuel are as follows:

a) LPG fuel is used for general heating, metal cutting and brazing, and in laboratories. LPG is procured in cylinders or for bulk storage by tank car or tank truck. Cylinders usually contain 100 pounds (45 kg) of gas, in a liquid state.

b) Fuel supply for firefighting trainers and crash and rescue training facilities.

c) Where economically justified, LPG facilities supplement utility-supplied gas systems for meeting peak loads and as a standby where interruption to a supply is possible.

(1) Standby LPG facilities serving large capacity equipment, such as boilers of 200,000 British thermal units (Btu's) per hour (58 000 W) and above, may consist of a separate gas system to an alternate set of burners on the equipment.

(2) For a gas system serving multiple small appliances, provide the standby equipment with means for air mixing to dilute the LPG with the proper amount of air to match combustion characteristics of either natural or manufactured gas serving the system in place of the utility-supplied gas, or in conjunction with it to reduce utility peak loads.

10.2.2 General Design Considerations. LPG is odorless, colorless, non-toxic, heavier than air, and explosive. To permit easier leak detection, an artificial odor may be introduced when shipped from a refinery. Under standard atmospheric conditions, LPG is in a vapor phase, but it is liquefied under moderate pressure for shipping and storage. The maximum vapor pressure for LPG design is 215 psig (1480 kPa) at 100 degrees F (38 degrees C). All LPG purchased by the military should emit a distinct odor at a concentration required by NFPA 58. See Facility Plate Nos. 030 through 033.

10.2.2.1 Fire Hazards. In the vapor phase, LPG is a hazard comparable to flammable natural or manufactured gas. The explosive range is 2.16 to 9.6 percent by volume of air-gas mixture.

a) Provide ventilation in accordance with NFPA 58.

b) In the liquid phase, LPG is a highly volatile, flammable liquid. Because of rapid vaporization, an LPG fire is basically a gas fire. Therefore, in the event of a fire, provide means to automatically shut off the LPG supply feeding the fire.

c) Provide emergency shut-off consisting of the combination of three modes: manual shut-off, remote shut-off, and thermal shut-off. Remote shut-off normally consists of a nitrogen system with plastic tubing at the controlled point so that the pressure holds open the valve. The plastic tubing acts as a fusible link. Provide a cable release shut-off with remote shut-off for combination shut-off. Refer to MIL-HDBK-1027/1 and API Std 2510.

d) Provide leak detection in accordance with NFPA 59.

e) For LPG equipment located inside buildings where there is a potential for loss of LPG, provide an alarm/detection system with local and remote alarms (audible and visual), high and low ventilation, doors with panic hardware, a leak detector readout with the readout outside, and a leak detector kit located outside.

10.2.2.2 Refrigerating Effects. At normal atmospheric pressure, the boiling point of propane is -45 degrees F (-43 degrees C). Propane in a liquid state and open to the atmosphere will evaporate (not boil).

a) Provide means to address operational concerns as described in the following paragraph. When LPG is expanded through a regulator from its vapor pressure to normal service pressures, the cooling effect may freeze the regulator if water is present in the LPG. Freeze-up can also occur on equipment which accumulates water such as strainers and control valves. The freezing effect can also result in exterior ice formations which disrupts the valve operator. Freeze-ups can be avoided by cleaning and nitrogen-purging the system.

b) Although it is dehydrated at the refinery, provide a means to keep LPG dry.

c) In flashing to vapor from the liquid phase, the refrigerating effect can be severe if an abrupt pressure drop occurs. Therefore, design a system which provides means to avoid this problem.

10.2.2.3 Design Standards. Use the following references for general design and safety standards for all LPG facilities. (Follow particular sections of standards applicable to types of facilities. Where conflicts occur, use the more stringent requirements.) Appropriate standards are as follows:

a) NFPA 54, NFPA 58, and NFPA 59.

b) API Std 2510.

c) Association of American Railroads, Circulars No. 17D and 17E.

d) Federal Specification BB-G-110.

e) Federal Specification RR-C-910, Sections ICC 4BW, ICC 4E, and ICC 4BA.

f) MIL-HDBK-1027/1.

g) Factory Mutual Engineering Corp. (FM), Loss Prevention Data, Liquid Petroleum Gas, Section 7-55,12-28.

10.2.3 Receiving Facilities

10.2.3.1 General Design Considerations. LPG may be received by truck, rail, or water for either cylinder (bottled gas) or bulk systems.

10.2.3.2 Transfer Methods. Design the facility to accommodate one of the following transfer methods:

a) No pumping or pressurizing facilities are required for small bulk systems utilizing truck delivery. Use pumping equipment provided on trucks instead of stationary pumps.

b) Provide LPG vapor piping, pumps, and compressors for off-loading tank cars or waterborne LPG tanks to operate, as follows:

(1) Provide compressor and piping to take suction from the vapor space of the storage tanks to be filled through an equalizing line and pressurize the tank to be off-loaded. This forces the LPG out through the liquid off-loading line into the storage tank.

(2) Arrange the piping so that after all liquid has been evacuated, the compressor suction can be reversed to pump the LPG gas from the delivery tank to the storage tank through a subsurface dip tube.

(3) Provide connections and valving to allow bleeding of the liquid propane from the connection after shutting off the valve at both the hose end and at the off-loading piping. This is done after off-loading the liquid from either a transport truck or a tank car. Provide a bleed attachment built into the off-loading equipment for this purpose.

(4) See Facility Plate Nos. 030 through 033 for typical installation. Provide liquid pumps as standbys for compressors.

c) Provide the transfer point from trucks or tank cars with a substantial concrete bulkhead. Anchor the piping in the bulkhead. Do not use pipe sleeves. Provide with the bulkhead hose or swivel-type piping connections. The bulkhead provides a breakaway point if the truck or tank car moves away without first disconnecting the hoses. Also provide emergency shut-off and excess flow valves. Refer to NFPA 58 and MIL-HDBK-1027/1 for additional information.

10.2.3.3 Flow Rates. Use the following flow rates:

a) Provide flow rates commensurate with the storage capacity and the size of pumps, compressors, and loading devices.

b) Provide flow rates that allow operators adequate time to shut down facilities before tanks or trucks are filled beyond maximum allowable. Limit flow rates from tanks by setting excess flow valves.

c) Provide off-loading lines with manually operated throttle valves so operators can adjust flow rates to points below shut-off settings of excess flow valves.

10.2.4 Storage Facilities

10.2.4.1 Types of Storage. Types of storage facilities include cylinders or bulk storage tanks.

a) Provide cylinders or containers conforming with ASME and/or DOT criteria as described in guide specifications. Used tanks are not allowed. The number of cylinders at a facility depends on the maximum required flow rate and the vaporization rate per cylinder at the minimum operating temperatures.

b) Provide bulk storage tanks as follows:

(1) For storage tanks up to 30,000 gallons (114 000 L) capacity, use horizontal steel tanks.

(2) For storage tanks above 30,000 gallons (114 000 L) capacity, use spherical or spheroidal steel tanks.

(3) Do not use underground tanks for LPG.

10.2.4.2 Number and Size of Bulk Tanks. Storage capacity depends on requirements, frequency of deliveries, and dependability of supply. Consider a multitank system for more dependability.

10.2.4.3 Design Requirements. Design requirements are as follows:

a) Tanks and tank appurtenances require conformance with NFPA 58 and API Std 2510. Design LPG tanks for a minimum working pressure of 250 psig (1700 kPa).

b) Tank spacing requires conformance with MIL-HDBK-1027/1 and FM criteria. See Facility Plate Nos. 032 and 033.

c) Provide sufficient flexibility in piping connections to tanks to allow for differential settlement of tank and equipment.

d) Provide cathodic protection in accordance with Section 2 of this handbook.

e) If using compressor transfer systems, fit tanks with dip pipes a minimum of 3/4 inches (20 mm) diameter, and gas inlet lines from compressors, so that gas pumped into storage tanks from empty delivery vessels is bubbled through liquid LPG to prevent overpressuring tanks.

f) Provide float-actuated high-level alarms set at maximum permissible filling level of 80 percent on all tanks of 3,000 gallon (11 000 L) capacity and above.

g) If using installed transfer systems, provide pressure switches on tanks set to open at pressures 5 psig (35 kPa) below set pressures of safety valves to stop compressor pumps transferring LPG to tanks.

h) Ensure that tanks are ASME coded and have the ASME national registration number.

i) Size storage tanks for 120 percent of required storage volume.

j) Electrically ground all storage tanks.

10.2.4.4 Inspection, Testing, and Certifications. Inspect, test, and certify all new unfired pressure vessels prior to placing into operation. Do not operate the unfired pressure vessel (UPV) without a valid certificate. Perform the following tests on the UPV:

a) A general UPV site inspection

b) An external UPV inspection

c) An internal UPV inspection

d) A hydrostatic test (strength and tightness tests)

e) An operational test

The inspector must be registered by the National Board of Boiler and Pressure Vessel Inspectors (NBBI) and must possess a Certificate of Competency and a NBBI National Board Inspection Code (NBIC) Commission. Upon completion and passing of the inspections and tests, the tank will be certified. Post a current, valid certificate on or near the UPV under a protective coating.

10.2.5 Distribution Facilities. See Facility Plate Nos. 030 through 033.

10.2.5.1 General Design Considerations. The following distribution system requirements apply to the transfer of both the gas and liquid phases of LPG:

a) Lay all distribution piping underground when practicable.

b) Provide the required flow rates.

c) Install electrical equipment in accordance NFPA 70 and API RP 500. Use only equipment approved for each classified area. Ensure electrical design conforms to API RP 540.

d) Ground and bond all piping, tanks, and equipment in accordance with API RP 2003, API Std 2510, API RP 540, and NFPA 70.

e) Refer to Section 2 of this handbook for corrosion protection requirements of underground pipe.

10.2.5.2 Piping Materials. Provide pipe, valves, and fittings in accordance with applicable sections of API Std 2510. Use Schedule 80 welded carbon steel. Threaded connections are only allowed for valves and equipment. Provide design characteristics and features for gas and liquid pipelines in accordance with Section 9 of this handbook. The minimum design pressure for liquid LPG piping is 350 psig (2400 kPa) as required by NFPA 58. Use Class 300 ANSI flanges as a minimum.

10.2.5.3 Accessories

a) Provide totalizing-type meters, pressure gauges, thermometers, strainers, and surge suppressors.

b) Ensure that meters are turbine-type with pressure and temperature compensation and have electronic/digital readout capability.

c) Install meters, if required, in accordance with requirements of API MPMS 5.

d) Provide pressure gauges of suitable range on all tanks, on suction and discharge of pumps and compressors, on inlet and outlet of vaporizers and on downstream of throttle valves.

e) Provide thermometers on all tanks, in all transfer lines for both liquid and gas, and on inlet and outlet of vaporizers.

f) Provide strainers in compressor suctions, upstream of meters and control valves.

g) Provide surge suppressors on liquid lines, if required.

h) Provide knock-out drums or scrubbers of suitable capacities in suction lines of compressors to remove entrained liquid. Provide drums with high level, shut-down devices, automatic liquid drainers, glass gauges, and drains.

i) Ensure all valves are UL listed or FM approved for LPG service. At a minimum, use Class 300 valves.

j) Provide equipment to inject alcohol into the LPG off-loading line. Provide equipment capable of injecting alcohol at a rate of 1:800 alcohol to LPG by volume.

10.2.5.4 Pumps and Compressors. Design and install pumps and compressors in accordance with API Std 2510 and NFPA 58.

10.2.5.5 Vaporizers. Provide vaporizing equipment for distribution facilities as follows:

a) Provide vaporizers at locations where liquid temperatures are too low to produce sufficient vapor pressure to meet the maximum required flow rate.

b) Use vaporizers that are indirect fired-type utilizing steam or hot water as a heating medium or direct fire waterbath-type.

c) Size vaporizers to provide at least 125 percent of expected peak load.

d) Design and install vaporizers in accordance with NFPA 58.

e) Use waterbath vaporizers approved by Factory Mutual.

f) Space waterbath vaporizers in accordance with FM Section 7-55,12-28, except provide a minimum of 75 feet (23 m) between truck off-load stations and tank storage. Where space is limited, provide a blast wall at the truck off-load stations.

g) When using waterbath vaporizers, provide fire-safe fusible link shut-off valves in LPG supply piping at the vaporizers. Provide remote shut-off capability and 24-hour remote monitoring.

h) When using waterbath vaporizers, provide an automatic excess flow/emergency shut-off valves in LPG supply lines to vaporizers. Use a hydraulically operated diaphragm control valve and locate at tank storage.

10.2.5.6 Controls. Provide the following controls.

a) Use pumps and/or compressors that can be started and stopped by manual pushbutton.

b) Provide automatic limit switches as follows:

(1) Pressure switches on storage tanks set 5 psig (35 kPa) below relief valve settings.

(2) Liquid level switches on storage tanks set at maximum filling levels.

(3) Liquid level switches on knock-out drums set to shut off compressor at high liquid levels.

(4) High pressure switches in compressor discharges to shut off compressor at safe pressure levels.

c) Provide manually operated throttle valves in liquid off-loading lines to adjust flow rates below excess flow valve settings on delivery tanks.

d) Provide a sight flow indicator in liquid lines near throttle valves.

e) Provide automatic temperature, pressure, and limit controls on vaporizers in accordance with NFPA 58.

10.2.6 Air Mixing Facilities

10.2.6.1 Pressure Controls. Provide pressure control valves in both air and gas lines to air mixing equipment. Provide a low pressure alarm in both lines to shut-off air and gas in the event of low pressure.

10.2.6.2 Volumetric Controls. Provide volumetric controls at all distribution facilities as follows:

a) Provide displacement-type or flow-type meters in both air and gas lines to maintain a proportional flow of air and gas.

b) Use a venturi-type proportioner where the variation in demand flow rate does not exceed the limited range of the venturi proportioner. Where the demand flow rate varies excessively, use a venturi-type proportioner in conjunction with a downstream storage tank, if economically justified. The storage tank will permit a varying rate of flow to the system while being filled continually or intermittently at a constant rate of flow through the proportioner.

10.2.6.3 Specific Gravity Indication. Provide a specific gravity indicator and recorder with high and low-limit switches to sound an alarm if the variation of specific gravity of an air-gas mixture exceeds acceptable limits of the system. For air mixing systems using LPG with a propane content of 90 percent and above, the specific gravity of the air-gas mixture is a sufficiently accurate index of its Btu or joule (J) content, so calorimetric controls and indication are not required.

10.2.6.4 Calorimetric Controls. Where economically justified, provide an automatic calorimeter to indicate and record the Btu or J content of the air-gas mixture. Provide high- and low-limit switches to calorimeter to sound an alarm if the variation of Btu content exceeds acceptable limits of the system.

10.3 COMPRESSED NATURAL GAS (CNG). Design CNG storage and dispensing facilities to comply with NFPA 52 and appropriate sections of NFPA 55.

10.3.1 Uses. CNG is primarily used as an alternative fuel in light duty vehicles although it and its cryogenic counterpart liquid natural gas are gaining acceptance in heavy duty applications. Energy policy has mandated with certain reservations that by fiscal year 2000, 75 percent of the light-duty vehicles purchased by the government will use alternative fuels. Therefore, there will be a significant increase in alternative fuel consumption.

10.3.2 General Design Considerations

10.3.2.1 System Sizing. To size the system, determine the total daily fuel consumption of base liquid natural gas vehicles. Based on daily miles driven, determine the number

to be refueled each day. The number of vehicles refueled during surges limits the capacity of most fast fill (3 to 6 minutes) operations. Scheduling vehicles to refuel through the day will effectively increase system capacity. Use a computer program to size the system because manual calculations usually result in larger systems than needed. Refer to the Institute of Gas Technology in the References section of this handbook for ordering information of one possible program. Use the latest version.

10.3.2.2 Future Requirements. Anticipate future requirements when sizing the system but normally limit the project to 100 to 150 standard cubic feet per minute (scfm) (47 to 71 L/s). If additional capability will be needed in the future, plan a second system later or consider other options such as slow fill systems for overnight fueling. This will provide redundancy and reduce initial cost. Usually, surge requirements drive machine size and can be controlled by management actions. Additionally, boosters operating from system pressure or special control systems may increase surge handling capacity (e.g., 25 to 30 percent of the gas in a cascade system is available for fast fill operations. A booster or special control system can increase it to 60 percent.) The combination of these actions could delay installing a second system many years at most installations.

10.3.2.3 Pressures. Most vehicle conversions use 3,000 psig (21 000 kPa) storage systems while original equipment manufacturers use 3,600 psig (25 000 kPa) systems. The compressors should operate up to 5,000 psig (35 000 kPa) to refuel at either pressure.

10.3.2.4 Connections. Design the systems to be skid-mounted with compressor system, cascade storage, and controls. Limit field tie-ins to connecting electricity and high and low pressure gas.

10.3.2.5 Compressors. Use crosshead guide type compressors for CNG service. Although more expensive, the design life of these units is significantly longer. Another option is a conventional style compressor designed specifically for CNG service. Do not use modified air compressors. Choose the type compressor after comparing maintenance and reliability data. Test all compressors at the factory with natural gas before shipping.

10.3.2.6 Compressor Drives. Use either electric or engine-driven compressor drives. Gas engine drives are less expensive to operate, but maintenance costs are higher. Use a life cycle cost analysis to determine which compressor drive is best. Although an engine-driven compressor is more expensive than an electric motor, electrical upgrade costs may be reduced. It also may be able to operate during power outages.

10.3.2.7 Compressor Inlet Pressure. Suction pressure is a key factor in selecting a compressor. Use high pressure gas mains to reduce both initial and operating costs. Avoid pressures less than 20 psig (140 kPa). If high and low pressure lines are near each other and the pressure differential is at least 150 psig (1030 kPa), 250 psig (1720 kPa) is preferred, and the low pressure line has a continuous load, a system can be installed and powered by the differential pressure. Such systems are extremely effective and have low initial and operating costs. Where a high pressure differential exists, another option is a turbine to drive the compressor.

10.3.2.8 Storage. Install a cascade system using ASME vessels; either tubes or spheres. Avoid banks of DOT cylinders since they must be inspected every 5 years.

10.3.2.9 Controls. Use either pneumatic or electronic controls depending on local practices. Electronic controls are preferred in most areas because they provide more accurate compensation for temperature effects. Pneumatic controls are simpler, but do not fill tanks to their limits. Normally, this is not a problem, since base vehicles do not normally operate to their maximum range in one day. Since vehicle tank pressures are rated at 70 degrees F (21 degrees C), tanks will fill to a higher pressure when outside temperatures are warmer and to a lower pressure when temperatures are cooler.

10.3.2.10 Dispensers. Although more expensive, provide conventional rather than post style dispensers. To reduce installation costs, use dispensers with the electronics internally mounted and calibrated at the factory. A dispenser makes CNG refueling similar to conventional refueling. Depending on funds, a post style dispenser is an option.

10.3.2.11 Nozzles. Use the industry standard nozzle. It comes in three pressure ranges: 2,400 psig (16 500 kPa), 3,000 psig (21 000 kPa), and 3,600 psig (25 000 kPa). These nozzles are designed so that a fill system cannot connect to a vehicle tank with a lower pressure rating, yet it can connect to vehicle tanks with higher ratings.

10.3.2.12 Environmental Considerations

a) The compressor unit's receiver is usually blown-down automatically, releasing about 0.06 gallons (0.2 L) of oil to the base and subsequently the ground. Discharges from other components, such as intercoolers, add to the contamination. Therefore, drip gutters with drains are required at each corner of the base. Develop a means of collection and retention of these wastes. Deactivating the automatic dump features and manually draining is an alternative to a collection system.

b) Provide gas recovery system as part of the compressor package to recover gas into an ASME recapture tank when off-loading the compressor.

c) At the dispenser, provide a vent 8 feet (2.4 m) to 10 feet (3 m) above ground level to discharge vent gas from dispenser hoses. Oversize the conduit from the dispenser to the cascade for a vent line to a future gas recovery system.

d) Locate units with care because of noise. Use landscaping to conceal units and attenuate the sound.

e) Natural gas engine drives, if used, may require an air emissions permit.

10.3.2.13 Weather. As a minimum, protect compressor units from the weather with a canopy. In colder climates, use a heated shelter/enclosure with sound attenuation. Some vendors have enclosures as normal options. Costs vary widely depending on the degree of protection. Enclosures may require ventilation and Class I, Division 1 classified electrical components. They should also be accessible by inspectors and servicing personnel. In lieu of a heated facility/enclosure, crankcase heaters and/or circulating block heaters may be suitable in moderately cold climates.

10.3.2.14 Coatings. The CNG equipment comes factory-painted. Specify special coatings where climatic conditions warrant. Select a color from the base color scheme. Light beige is a practical choice. White is a poor choice since the heat of operation discolors it. Storage containers may have to be painted white with blue letters to meet codes.

10.3.2.15 Water Content. Water content in natural gas varies with region. Gas in the Southeast United States is usually dry, while gas from West Virginia is very wet. Provide dryers to dry the gas to a pressure (storage pressure) dew point (PDP) at least 10 degrees F (6 degrees C) below the winter design dry bulb temperature.

10.3.2.16 Design Standards. Design CNG systems to NFPA 52. Use NFPA 54 for the gas supply to the compressor. Use the ASME Code for Unfired Pressure Vessels for cascade storage. Electrical work must conform to NFPA 70. Where collocating CNG and gasoline stations, also use NFPA 30A.

10.3.3 Warning. During peak demand periods, some suppliers mix propane air mixtures with natural gas. When the amount added exceeds 10 percent by volume, the CNG produced from this gas will normally not perform properly in CNG vehicles because propane becomes a permanent liquid in storage tanks. Oxygen sensors can be installed to shut down the station during such periods. Installations with this situation should use dual fuel vehicles.

10.4 HYDRAZINE STORAGE AND SERVICING FACILITIES

10.4.1 Uses. A blend of 70 percent hydrazine and 30 percent water, known as H-70 fuel, is used to operate the F-16 emergency power unit (EPU). The F-16 H-70 tank carries 56 pounds (25 kg) of fuel and requires servicing after the fuel has been used. The H-70 tanks are removed from the aircraft when the fuel is depleted below a level specified by the using activity. The tanks are delivered to the servicing facility where any remaining fuel is drained into a closed 55-gallon (210 L) stainless steel drum. The aircraft H-70 tank is filled using a closed system charging unit and is either returned to the aircraft or placed in a handling/storage container for future use. The bulk H-70 storage tank is a 55-gallon (210 L) stainless steel drum containing approximately 51 gallons (190 L) of H-70. Nitrogen gas is used as an inert

pressure head in the bulk drum to transfer H-70 to the charging unit. The charging unit is 75 inches (1900 mm) long by 36 inches (900 mm) wide by 92 inches (2340 mm) high and weighs approximately 475 pounds (216 kg). An F-16 tactical wing is expected to use approximately 100 gallons (380 L) of H-70 per 20,000 flight hours with an additional minimum of 150 gallons (570 L) held in reserve to handle deployment/safety stock requirements.

10.4.2 General Design Considerations

a) H-70 carries the compatibility group designation of Group C.

b) Separate H-70 fuel storage and liquid/gaseous oxygen storage in accordance with AFMAN 91-201. Locate the facility a minimum of 50 feet (15 m) from aboveground explosive storage in accordance with AFMAN 91-201.

c) Locate the facility a minimum of 100 feet (30 m) from public highways; civilian or government living areas; public facilities such as schools, churches, clubs, sewage treatment plants; or rivers, lakes, or streams because of bio-environmental considerations.

d) Segregate the servicing and storage facility from large population concentrations within the confines of a military installation and subject to the criteria stated above.

e) Store 55-gallon (210 L) drums of hydrazine in facilities no less than 80 feet (24 m) apart. The spacing is also subject to the other criteria stated in this section. This criterion is limited to ten 55-gallon (210 L) drums and 20 EPU tanks (provided the tanks are stored inside an approved shipping container).

f) Refer to Army Corps of Engineers TO-42B1-1-18 and TO-42B1-1-18S-1 for additional information.

10.4.3 Construction Concepts. Provide the H-70 facility with space for tank servicing, storage, and personnel hygiene.

10.4.3.1 Access

a) Provide security fencing with a vehicle entrance gate surrounding the facility to restrict access.

b) Provide a doorway leading into storage areas to allow for forklift access.

10.4.3.2 Architectural

a) The total area recommended for the facility is 783 square feet (73 m^2) with H-70 and N_2 bulk storage occupying 210 square feet (20 m^2), a servicing and storage area of 449 square feet (42 m^2), and a personnel area of 124 square feet (12 m^2).

b) Provide ceiling height of 12 feet (3.7 m) in storage and servicing areas and 8 feet (2.4 m) in personnel areas.

c) Provide hollow, metal, exterior and interior doors with panic hardware and automatic closure. Provide double doors, 6 feet (1.8 m) wide to allow for equipment movement. Ensure single doors are standard size.

d) Provide a rack in the servicing and storage area for vertical drum storage (bung side up) to allow for drainage of flush water. Construct storage rack of hydrazine compatible materials such as stainless steel, plastic, or high-density polyethylene (HDPE).

e) Design floors to permit drainage and prevent collection of liquids on any floor surface.

10.4.3.3 Fire Protection Systems. A wet pipe sprinkler system is recommended. Consider above-ceiling detectors, as well as room detectors. Provide fire extinguishers of a type approved for use in combating hydrocarbon fuel fires in regulated areas. Use AFFF or water. Do not use halogens or CO_2 extinguishers. Refer to Army Corps of Engineers TO 00-25-172.

10.4.3.4 Spill Containment

a) Provide spill containment in the H-70 storage area with a capacity equal to the larger of 110 percent of the largest drum present or 10 percent of the total volume present.

b) Spill containment for facilities which store only one or two drums of H-70 can be individual containers for each drum.

c) Provide a diked containment area for facilities which store multiple drums of H-70.

(1) Provide ramps for vehicle access.

(2) Provide a coating or liner for concrete containment areas. Do not allow exposed iron or rebar in the containment area.

10.4.3.5 Floor Drains

a) Provide a concrete floor in the regulated areas, sloped to floor drains which lead to a collection tank.

b) Provide a floor trench drain 18 inches (450 mm) wide by 6 inches (150 mm) deep by 9 feet (2.7 m) long, covered with an open stainless steel grate in the H-70 fuel tank servicing area. The trench is required to contain any possible H-70 spillage and periodic draining of the H-70 servicing stand. Construct the trench parallel to the wall separating the storage area from the servicing area. Locate the servicing stand so the drain spigot from the scrubber is in-line with the trench drain. A polypropylene or polyethylene elbow connection directly from the drain spigot to the trench drain is required.

c) Ensure deluge shower and eyewash units in the servicing area drain into the containment tank.

d) Ensure industrial sink in the protective equipment room drains into the containment tank.

e) Equip drains leading to the containment tank with traps to prevent vapors from contaminating the area.

f) Provide access to the sanitary sewer for both clean change room and shower facilities.

g) Construct floor drains which are subject to carrying H-70 residue of polypropylene or polyethylene.

10.4.3.6 Collection Tank and Piping

a) Provide a collection tank and piping of materials compatible with hydrazine, water, and neutralizer.

b) Size the collection tank to contain 100 times the maximum quantity of H-70 that could spill with a minimum capacity of 1,000 gallons (4000 L).

c) Provide piping of 304 stainless steel, HDPE, or to a limited extent, galvanized steel.

d) Provide gaskets of suitable materials such as Viton.

e) Test the system annually with water.

10.4.3.7 Grounding. In the storage area, provide a ground strap or grounding point system to ground each drum of H-70. Locate the grounding strap around the interior walls of the storage room, 54 inches (1370 mm) above the floor. The grounding system must have a resistance of 25 ohms or less. The facility must also have an approved lightning protection system.

10.4.3.8 Hygiene Support Criteria

a) Provide lavatory washing facilities in a non-regulated area close to the exit from the regulated area and contiguous to the clean change room.

b) Provide shower facilities for each 10 or less workers.

c) Provide a clean change room. Provide a separate area for the removal of contaminated clothing to prevent the spread of potential contamination from the regulated area.

d) Provide toilet facilities if the H-70 facility is isolated from other buildings where toilet facilities are available.

e) Post signs which state that consumption of food, beverages, cosmetics, tobacco products, and chewing materials are prohibited.

10.4.3.9 Lighting. Provide lighting intensities of 50 footcandles (540 lux) in the servicing area and 30 footcandles (320 lux) in the remainder of the facility. Provide exterior lighting at all entrances and security lighting as required.

10.4.3.10 Safety

a) Provide vapor sniffers for use in the H-70 fuel drum storage area and servicing area to alert personnel to excessive levels of H-70 fuel vapors. Provide sniffers capable of detecting 10 ppb of H-70.

b) A facility respirator air system is recommended.

c) Provide an explosion proof observation window (4 feet (1.2 m) by 4 feet (1.2 m)) between the H-70 fuel drum storage area and the tank servicing area.

d) All lighting fixtures, electrical outlets, and electrical components located within the storage and servicing area should be explosion proof.

e) Provide eyewash fountains and deluge shower units within sight of and on the same level as locations where direct exposure to H-70 might occur. Pipe eyewash and showers to the H-70 collection tank.

f) Post signs at entrances to all areas. Signs should warn personnel that “H-70 is a cancer suspect agent,” “Authorized Personnel Only,” and “No Smoking.”

g) All tools and equipment must be constructed of hydrazine compatible, rust-free, corrosion-resistant materials.

10.4.3.11 Utilities

a) For electricity, provide 120-VAC, 60-Hz, single phase, three-wire, 20 amperes, duplex convenience outlets in each area of the facility (minimum six outlets). Two-way switching is preferred to control lighting in the H-70 fuel drum storage area from the H-70 fuel tank servicing area. Provide explosion proof, Class I, Division 2, Group C electrical fixtures.

b) Provide 15 gpm (1.0 L/s) hose bibb water outlets with backflow prevention. Size hose bibb for standard lawn hose connections. Locate the hose bibb to provide water to service stand on the inside of the exterior wall, on the center of the servicing trench, about 2.5 feet (0.8 m) above the finished floor (below the 4-inch (100 mm) pipe sleeve). Water with a reduced pressure-type backflow preventor will also be required for the fire suppression system and potable water systems.

10.4.3.12 Ventilation

a) Segregate mechanical ventilation for regulated versus non-regulated areas. Exhaust regulated areas through a common manifold. Evaluate the need for an air pollution control system on a case-by-case basis and consider local, state, or federal emissions criteria applicable to the construction location.

b) Design ventilation systems for regulated areas to maintain a negative pressure of 0.05 to 0.1 inches of water (12 to 25 Pa) with respect to adjacent non-regulated areas.

c) Design ventilation for servicing and storage areas to provide a minimum of 20 air changes per hour.

d) Design the ventilation system for automatic shutdown in the event of a fire within the facility.

e) Use flexible exhaust vent of the “elephant trunk” type to exhaust vapors that are released when full hydrazine drums are opened. Design for air flow at the vent nozzle to be approximately 150 cfm (71 L/s). Refer to American Conference of Governmental Industrial Hygienists (ACGIH), Design of Industrial Ventilation Systems.

f) Place exhaust ports at approximately 18 inches (450 mm) above the floor. To avoid exhausting H-70 vapors into areas where personnel are present, such as walkways or escape paths, consider placing exhaust ports above the roof line.

g) Place a switch on the outside of the building, near an entrance that will allow personnel to turn on all exhaust fans prior to entering the facility This will purge the facility of any H-70 vapors that may have collected in the facility while not in use.

h) Maintain temperature in regulated areas below 120 degrees F (49 degrees C). Provide environmental controls consistent with ventilation for personnel comfort.

10.4.3.13 Waste Product Disposal

a) Add water to H-70 spills in a 100 to 1 ratio to reduce the H-70 concentration to less than 1 percent. Size collection tank accordingly.

b) Use neutralizers, such as 65 percent granular calcium hypochlorite (HTH), 14 percent bleach, and 5 percent bleach to stabilize the H-70/water mixture.

c) Provide storage for HTH away from hydrazine and other potentially reactive materials. HTH is extremely corrosive.

d) Consult with local base bio-environmental engineer as to procedures for emptying the collection tank.

10.5 OTTO FUELS. Information on OTTO fuels is contained in NAVSEA 56340-AA-MMA-010. Distribution of this document is restricted. Requests for information are handled by Naval Sea Systems Command. Refer to Section 2 of this handbook for additional information.

Section 11: SUPPORT FACILITIES

11.1 INTRODUCTION. This section provides design criteria for facilities which may be required to support fueling activities. Specifically, operations buildings, contaminated fuel recovery systems, roads, utilities, and aircraft refueler parking areas are detailed in this section.

11.2 OPERATIONS BUILDING. Review the fueling activity to establish a need for each component of this building. Factors which will affect these reviews are number of people required for fueling activity, level of activity, types of fuels handled, on-site quality control, availability of replacement parts, availability of maintenance support, and level of training required.

11.2.1 Design Standards. The building design criteria will be the building code in effect at the facility. Automatic sprinkler protection in accordance with MIL-HDBK-1008 is required regardless of building code requirement if a water supply is available.

11.2.2 Fuel Office. Provide a fuel office with sufficient space to perform the necessary planning, administrative, and management functions associated with the accomplishment of the fuel division’s mission. Refer to AFH 32-1084 for size on Air Force projects.

11.2.3 Training/Conference Room. Provide a multipurpose room with equipment for training, conferences, and briefings. Design this room to accommodate furniture and have built-in features such as markerboard, tack board, book shelves, screen, clock, coat hooks, and storage cabinets.

11.2.4 Fuel Workshop. Equip the fuel workshop with an adequately sized and convenient work bench with compressed air and electrical outlets available. Provide slip and fuel-resistant floor, emergency shower/eye wash, and adequate storage space adjacent to the workbench for frequently used tools, spare hardware items and accessories. If facility is large enough and mission warrants, consider overhead crane, laundry facility, and shower facility. Refer to Section 2 of this handbook for electrical hazard classification and requirements and NFPA for ventilation requirements.

11.2.5 Storeroom. Provide an adequate storeroom for spare hoses, nozzles, filter and monitor elements, special tools, special clothing, test equipment, and fuel spill clean-up equipment. Determine size and location of each facility to provide sufficient space for orderly storage and location for ready access to needed material by fuels division personnel.

11.2.6 Laboratory. The fuel laboratory size and associated equipment depend on the scope of the quality surveillance and testing program performed. Design the laboratory in accordance with applicable NFPA and CFR codes. Review NFPA 45 for applicability. However, for most facilities and most fuels covered in this handbook, it will not apply. Minimum laboratory requirements are as follows:

a) Lighting and fixtures in accordance with NFPA 70.

b) Sink with running hot and cold water. Include hot water heater capable of providing water at 130 degrees F (54 degrees C) for cleaning laboratory glassware.

c) Work bench(s) or counter(s) of sufficient size to accommodate and maintain all required test equipment in a ready-to-use position. Compose countertops of a non-permeable material suitable for working with petroleum fuels. Ensure that laboratory flooring material is impermeable and suitable for a fuels laboratory.

d) Storage cabinets for test equipment support items; for example, bottles, drying rack, and spare millipore pads.

e) Fume hood, comply with 29 CFR 1910.1450, Appendix A.

f) Emergency eyewash/shower.

g) Outward opening doors with panic bars. Multiple doors may need to be provided in accordance with NFPA 45.

h) Portable firefighting equipment.

i) Telephone.

j) Fire alarm box.

k) A waste tank or means to dispose of fuel samples.

l) Lighted exit signs.

m) Capabilities to maintain laboratory at 73 degrees F (23 degrees C) plus or minus 5 degrees F (3 degrees C). (Required to protect laboratory equipment.)

n) Bonding and grounding of all metal working surfaces and electrical equipment. Also, provide a common static grounding strap or approved grounding points readily accessible to all fixed working surfaces and alongside entrance doors.

o) Recessed floor to prevent spilled fuel from flowing into adjacent areas.

p) Windows constructed of fireproof materials. Draperies and curtains are prohibited. If interior windows are provided, use translucent reinforced safety glass.

q) An HVAC system designed so that air from the laboratory does not recirculate to other portions of the building.

r) Floor drains.

s) Interior separations from other portions of the building with a partition rated for fire separation as required by NFPA 45.

t) Type “N” unprotected non-combustible construction.

11.2.7 Miscellaneous Safety Equipment. Provide firefighting, fire alarm, and emergency eyewash/shower equipment.

11.2.8 Control Room. Where computerized control equipment is anticipated, provide a control room of adequate size and with a maximum view of outside activities. Allow extra space along

the ceiling/wall interface for future installation of security monitors. Consider electrical receptacles and data outlets for future use.

11.2.9 Miscellaneous Spaces. Provide toilets, shower facilities, lockers, dressing rooms, mechanical room, electrical room, janitor closet, break room, etc. based on the size of the facility and the planned activities.

11.2.10 Communications. Make provisions for telephone, data transmission, and other planned communications equipment.

11.3 ROADS. Design roads within a fueling facility to accommodate maintenance activities, operations personnel, and fuel delivery and/or issues. In addition, evaluate the roads leading to the facility for their adequacy of width, access, geometrics, and weight restrictions. Refer to AFMAN 88-7, Chapter 5 (also known as Corps TM 5-822-5) for design guidance.

11.4 UTILITIES. In most cases, a fueling facility requires water (domestic and fire protection), sanitary sewer, storm sewer, and electricity.

11.5 AIRCRAFT REFUELER PARKING

11.5.1 General. Ensure aircraft refueler parking areas meet the following criteria at a minimum. For additional design guidance, refer to NAVAIR 00-80T-109 and Army Corps of Engineers TO 00-25-172.

11.5.2 Clearances

a) Provide a minimum of 25 feet (7.6 m) between the centerlines of adjacent refueler trucks when in the parked position or 10 feet (3 m) minimum of clear space between parked trucks, whichever is greater.

b) Provide a minimum of 50 feet (15 m) between a refueler parking area and the following:

(1) Uninhabited building for new projects.

(2) Pump house or filter/separator building.

(3) Taxiing aircraft.

(4) Fence, if space is a limitation (100 feet (30 m), if space is available).

(5) Roads outside of a security fence.

(6) Overhead power and communication lines.

(7) Pad-mounted transformers.

(8) Parked aircraft.

(9) Any building other than maintenance building.

c) Provide a minimum of 100 feet (30 m) between a refueler parking area and the following:

(1) Inhabited buildings.

(2) Truck or tank car off-loading station.

(3) Truck fill station.

(4) Property lines.

(5) Highways.

(6) New POL Operations Building.

(7) Airport surface detection radar equipment.

d) Provide a minimum of 300 feet (90 m) between refueler parking areas and the following:

(1) Aircraft warning radar antennas.

(2) Areas where airborne surveillance radar may be operated.

e) Provide a minimum of 500 feet (150 m) between refueler parking areas and airport ground approach and control equipment.

f) Provide a distance as great as practically possible between refueler parking areas and radio transmitting antennas.

g) Contact the installation safety office to obtain distance criteria from aircraft refueler parking areas to aircraft carrying explosive materials.

11.5.3 Arrangement. The preferred arrangement is parallel positions, but “front-to-back” and variations of the two are acceptable. Provide “front-to-back” clearance between vehicles such that the refueler in the “back” position would not have to back-up to pull out of the parking position. This distance will vary according to the turning radius of each refueler. Arrangement should satisfy functional requirements of users and provide for safe operation and efficient use of available space. Provide for parking of all refueling vehicles expected to use this facility and include identification of positions.

11.5.4 Ingress/Egress. Provide for “drive-ahead” motion of vehicles at all stages to avoid backing up vehicles under normal circumstances. Provide for smooth and efficient movement from the refueler fill stand area to the parking positions and from the parking positions to the aircraft apron. Where necessary, provide adequate markings to ensure safe and efficient vehicle movements. At a minimum, provide two means of ingress/egress.

11.5.5 Paving. Use concrete pavement, capable of withstanding design vehicle wheel loads. Seal joints with fuel-resistant materials. For circulation pavements, provide bituminous flexible pavements unless an economic analysis shows rigid concrete is more cost-effective. Use concrete pavement in refueler parking areas.

11.5.6 Drainage. Provide an impermeable retention and controlled drainage system leading to a containment or treatment system. Pave the area with concrete sloped a minimum of 1 percent toward catch basins or trench drains. Design containment in accordance with the most stringent of ICBO UBC 902, BOCA F2315, and state and local regulations. Provide containment with capacity equal to the larger of the volume of the largest refueler truck to be parked or the runoff from a rainfall of intensity equal to a 5-year

expectancy, 1-hour duration storm. Consider combining the containment with other containments or treatment facilities on-site. Do not use asphalt within a containment area. Design ramps over containment curbs to slope no more than 2 percent to avoid damage to the refuelers.

11.5.7 Fire Protection. Refer to Section 2 of this handbook for fire protection requirements.

11.5.8 Security. Provide fencing and lighting for security as required in Section 2 of this handbook.

11.5.9 Lighting. Provide 1-footcandle (10 lux) lighting to ensure that a fuel leak from the refueler is seen.

11.5.10 Block Heater Connections. At facilities where refuelers have block heaters, provide connections for those heaters.

Section 12: MAJOR REHABILITATION

12.1 INTRODUCTION. Decisions concerning major rehabilitation will be made by Service Headquarters/DFSC based on economics, mission, safety, or environmental factors. It is not the intent of this section to mandate rehabilitation but only to provide guidance if the decision is made. The most common reasons for rehabilitation are to meet environmental needs or to extend the usable life of the facility. If a tank or major component is taken out of service for rehabilitation, review other sections of this handbook. However, consider each change based on its merits and its compliance with this handbook. It is not the intent of this handbook to initiate changing and upgrading of existing facilities. Before initiating a facility improvement or major rehabilitation fuel project, it is recommended that a Physical Condition Survey be conducted to survey the condition of the facility with the goal of identifying major deficiencies and prioritizing the work required. Contact the appropriate Command Fuels Engineer, Engineering Field Division, Engineering Field Activity, or Army Corps of Engineers regional design office. For Naval Air Stations and Marine Corps Air Stations, include a representative from NAVAIR on the survey team. In most cases, coordinate major rehabilitation proposals with the base master plan.

12.2 GENERAL REQUIREMENTS. Section 2, General Design Information, contains important information on fueling facilities. Do not begin the design or modification of any fueling system without first becoming completely familiar with Section 2 of this handbook.

12.3 ABOVEGROUND FUEL STORAGE TANK REHABILITATION. Existing aboveground storage tanks can be modified to meet fuel quality standards, safety requirements, and environmental regulations. To maintain the structural integrity of aboveground storage tanks and to ensure a complete and usable facility, ensure all designs are accomplished by an engineering firm regularly engaged in tank modification or have all plans and specifications reviewed by an API Std 653 certified inspector. Complete all tank modifications, repairs, alterations, or inspections in accordance with API Std 653 and API Std 650. Require a new strapping table after any major tank rehabilitation.

12.3.1 Increase Manhole Sizes. Many older aboveground vertical tanks have inadequately sized shell manholes. The ventilation and equipment requirements for maintenance have created a need for 36-inch (900 mm) diameter manholes. If they do not exist, consider rehabilitation. Provide in accordance with Section 8 of this handbook.

12.3.2 Replace Tank Floors. Replace existing tank floors only when an API Std 653 inspection (including a magnetic flux leakage test) indicates that the useful life of the bottom has expired, if the tank is leaking, or if significant fuel quality problems due to ponding water exist. Conduct an analysis of the existing tank and local conditions to determine the most desirable approach. The type of new bottom to be installed depends upon a number of factors, including: condition of the existing bottom, tank foundation, shell condition, and amount of tank capacity which can be “lost.” Install double bottoms or replacement bottoms in accordance with API Std 653. Install sloped bottoms (3 to 5 percent) either above the existing bottom if the user can accept the resulting loss in tank capacity or remove the existing bottom and install a new sloped bottom in its place. If conditions and cost make the recommended slope impractical, provide a minimum slope of 2 percent. In either case, install an impermeable liner in accordance with Standard Design AW 78-24-27, as well as leak detection between the two floors. The technology exists and it may be cost effective to raise the tank off its foundation to accomplish under tank modifications or repairs (e.g., adding containment liner/tell-tale system, cathodic protection, ringwall, etc.).

12.3.2.1 Double Bottom With Washed Sand Layer and Liner. Clean and repair the existing tank bottom, install a liner on top of the existing tank bottom, add a 4- to 6-inch (100 to 150 mm) silica sand layer on top of the liner, and install the new steel tank bottom on top of the sand layer. Refer to Section 8 of this handbook for suitable sand criteria. Leak detection consists of tell-tale slotted PVC pipes within the sand layer at regularly spaced intervals and extending out through the outer shell of the tank. Provide cathodic protection by sacrificial anodes or impressed current close to the liner to allow maximum clearance from the new tank bottom. Install adequate numbers of a cathodic protection reference cells between the two bottoms.

12.3.2.2 Double Bottom With Concrete Layer and New Steel Bottom. Clean and repair the existing tank bottom, install a liner on top of the existing tank bottom, pour 4 to 6 inches (100 to 150 mm) of fiber reinforced (low slump mix - typically 3,000 psig (21 000 kPa)) concrete over the liner and existing bottom, shape the concrete to provide adequate slope, and install the new steel tank bottom on top of the concrete. Slope the concrete towards a sump and form with a series of grooves along the top surface to collect any product which may leak through the new bottom. Slope the channels to a collection point with a pipe extending to an observation well. Provide concrete with an alkalinity of 13 or higher.

12.3.2.3 Double Steel Bottom. Clean and repair the existing tank bottom, place a structural support system on top of the existing tank bottom, and install the new tank bottom. Design the structural support system to prevent excessive deflections resulting from loads on the primary (new) tank bottom. Allow for an interstitial space between the two tank bottoms to detect and collect any product from a leak. Purge the interstitial space between the two bottoms with nitrogen to remove the oxygen, thus creating a non-corrosive, non-combustible environment. The elimination of condensation and oxygen within the space provides cathodic protection for the upper (new) bottom. Provide leak detection with sensors which can detect pressure changes within the space. A pressure increase results from a leak in the upper tank bottom as product enters the space. A decrease in pressure indicates a leak or steel failure has occurred in the lower tank bottom.

12.3.2.4 Single Bottom With Liner. Remove the existing tank bottom and prepare the sub-base for bearing capacity. Place sand layer on the sub-base to support the primary tank bottom, install a liner with a slope to a center liner sump, place a minimum 12-inch layer of sand on top of the liner, and install a new tank bottom on top of the sand layer. The liner sump is the collection point for any leaks from the bottom and consists of a drain pipe leading to an observation well. An alternative method is to use tell-tale slotted PVC or stainless steel pipes in accordance with Standard Design AW 78-24-27. Provide cathodic protection by sacrificial anodes or impressed current close to the liner to allow maximum clearance from the new tank bottom. Install adequate numbers of a cathodic protection reference cells between the two

bottoms. Place cathodic protection in the sand layer approximately 6 inches (150 mm) below the new tank bottom and above the liner.

12.3.3 Aboveground Vertical Tank Inspections. Prior to modifying the tank, conduct a thorough inspection consistent with the requirements of API Std 653. This inspection will reveal any repairs that need to be made in order to comply with current regulations. While the API 653 tank inspection is a “dry” inspection and must be coordinated with the station fuels division, technology exists to conduct preliminary tank cleaning and bottom scanning via robot, without removing tank from service.

12.3.4 Replace Floating Roof Tanks With Fixed Roofs. If a floating roof requires significant repair work, is corroded beyond economic repair, or for any reason is considered unserviceable (by an API Std 653 inspection), consider replacing it with a fixed cone roof or geodesic dome and internal sealed honeycomb cell (non-perforated) floating pan. When an aluminum dome is added to an existing tank, the roof manufacturer and the designer must determine that the tank has sufficient strength to support the new roof. Install structurally supported aluminum dome roofs in accordance with API Std 650 and 653. In general, all open top, floating roof tanks containing aviation fuel should be programmed to receive a cover as should all tanks in northern climates where snow and ice is a problem.

12.3.5 Product Recovery Systems. Provide storage tanks with pumps, piping, valves, and tanks to collect, recover, and return usable aviation turbine fuel which would otherwise become waste. Include a tank(s) to collect fuel/water mixtures from tank and equipment sumps, equipment drains, high point vents, low point drains, and any other equipment from which fuel/water mixtures can be collected. Separate the fuel and water portions. Filter the fuel portion and return to bulk storage tanks. Do not discharge the water portion to surface water without additional treatment and permits or treat the water portion as wastewater. Refer to Section 2 of this handbook for information on handling of wastewater. Design in accordance with Standard Design AW 78-24-27.

12.3.6 Coatings. In tank coating projects, minimize the generation of hazardous waste associated with coating removal. Some alternatives to traditional sand blasting include shot "blasting", chemical stripping, high pressure water, carbon dioxide, or chemical stabilizer additive process. Designs for maintenance painting, both interior and exterior, should be based on a coating condition survey, as discussed in the notes to NFGS-09971, Exterior Coating for Welded Steel Petroleum Storage Tanks. An evaluation of shell coating should be based not only on condition but on the need for coating the shell and an evaluation of apparent corrosion pressures on the shell. Corrosion pressure on shell coatings is generally fairly low; therefore, there is not the same need for coating thickness and integrity that is required for floors and ceilings. Refer to Section 8 of this handbook for additional information on interior and exterior coatings for storage tanks. Re-coat the portion of the tank that is already coated. When tanks are taken out of service for inspection or repairs, inspect the underside of the roof for rust. If conditions merit, coat the underside of the roof in conformance with Section 8 of this handbook.

12.3.7 Isolation Valves. Require tank isolation valves to prevent the accidental release of fuel into the environment. Provide double block and bleed tank shell valves located between the tank shell and the high level shut-off valve.

12.3.8 Alarms and High Level Shut-off Valves. Equip storage tanks with a means to prevent accidental overfill. Design in accordance with Standard Design AW 78-24-27. Refer to Section 8 of this handbook for applicable requirements for alarm and valve installation.

12.4 UNDERGROUND OPERATING TANKS. If major rehabilitation is required, upgrade existing underground operating tanks to conform with 40 CFR 280 and 40 CFR 281 and applicable state and local underground storage tank regulations. As a minimum, provide leak detection, cathodic protection, and overfill protection. Careful study of cut and cover tanks is necessary since construction features may make it impossible to comply.

12.4.1 Manholes. Provide a 36-inch (900 mm) diameter manhole for tanks. Extension necks and internal ladders are required for cleaning and inspection. Provide a minimum of

one manhole for tanks between 1,000 gallons (4000 L) and 5,000 gallons (19 000 L). Provide a minimum of two manholes for tanks larger than 5,000 gallons (19 000 L). Provide manhole containment sumps for all manholes.

12.4.2 Interior Coatings. Coat underground operating tanks in accordance with Section 8 of this handbook.

12.5 HYDRANT SYSTEMS. Decisions concerning major rehabilitation of existing direct aircraft refueling systems will be made by Service Headquarters. This paragraph addresses existing direct aircraft refueling systems (Type I and Type II) which can be rehabilitated or modified to meet fuel quality standards, safety requirements, mission requirements, and environmental regulations. All designs should be accomplished by an engineering firm regularly engaged in the design of direct aircraft fueling systems. The provisions of Section 4 of this handbook are applicable.

12.5.1 Pumps. Repair or replace existing pumps to meet increased fuel demands. Rebuild pumps including complete bearing replacement, additional bowls or increased impeller size, replacement of mechanical seals, shaft lengthening or shortening to match replacement tanks, etc. In some cases, additional capacity can only be achieved by total pump replacement or rearrangement of piping. Consider pump replacement where, due to equipment age or condition, it is more economical to replace than to rebuild. Pump and motor replacement may also result in higher efficiency units with lower power demands and increased spare part availability.

12.5.2 Filter/Separators. Existing filter/separators must be capable of meeting requirements of API Publ 1581. API filters provide superior filtration and water removal required of high performance aircraft. A majority of existing filter/separators can be upgraded to the API elements. Consider vessel replacement if the existing unit cannot be converted to API elements or if the unit (with API elements) fails to meet quality standards. Issue filter/separators should be given priority for upgrade on a stand-alone project. Upgrade of all filter/separators is mandatory on any major rehabilitation project.

12.5.3 Control Systems. Pump houses and hydrant systems typical of the Panero (circa 1952) and Pritchard (circa 1958) designs utilize hard-wired, high-voltage mechanical relays. Control systems installed from the pump house to the lateral control pits, emergency stops, and pit activation switches are typically high voltage. Age, elements, and exposure to fuels may deteriorate control system wiring and render it no longer reliable or safe to operate. Consider control system replacement whenever a significant portion of the pump house is repaired or when fire, safety, or electrical codes indicate a hazard exists. Generally, hard-wired relay logic systems are expensive to build and maintain and do not offer the flexibility of PLC based systems. Control systems should be of low voltage design incorporating industry standard PLCs. If control facilities are isolated from the pump house (not subject to atomized fuel) and the facility has positive ventilation, then non-explosion proof fixtures may be incorporated into the design. Existing control wiring has probably deteriorated and numerous conduits are no longer intrinsically safe. Replace control wiring and wherever possible run control wiring in overhead conduit. If necessary, replace kill switch and emergency stop circuits as part of the pump house rehabilitation. Cable wiring systems are easier to install and troubleshoot and should be considered whenever the wiring to hydrant system is replaced.

12.5.4 Electrical Systems. Replace secondary electrical systems, including lighting and motor conductors and motor control centers, as part of pump house repairs. Ensure circuits within the pump house, exposed to the possibility of atomized fuel, comply with the provisions of NFPA 30 and are classified Class I, Division 1. If the motor control center is isolated from the pump house (not subject to atomized fuel) and the facility has positive ventilation, then the area may be derated and non-explosion proof lighting fixtures may be incorporated into the design. Existing secondary wiring has probably deteriorated and numerous conduits are no longer intrinsically safe. Replace motor wiring and wherever possible run control wiring in overhead conduit.

12.5.5 Lateral Control Pits. Lateral control pits are typically concrete structures with heavy metal-hinged lids containing valves, pumps, filters, and piping associated with the supply of fuel from a pump house to a hydrant outlet. Repair or replace pits to prevent the accidental release of

aviation turbine fuel to the environment and water infiltration. Slope pit floors to a sump and provide manually operated sump pumps to aid in water removal. Use either rolling or light-weight hinged aluminum pit lids with a water-tight design. Comply with Standard Design AW 78-24-28.

12.5.6 Distribution Piping. Minimize the use of unlined carbon steel pipe, especially with jet aircraft. A number of alternatives exist which reduce the exposure of aviation turbine fuel to unlined carbon steel pipe. One option is to internally coat existing systems without pipe removal. In-situ coatings can prevent fuel degradation; however, final filtration must still be provided at the aircraft by either a mobile or fixed filter/separator. Another option is to sleeve the piping with a non-ferrous material (stainless steel). Consider this option if reduced flow rates are acceptable.

12.5.7 Control Valves. Consider reusing existing control valves wherever possible. Control valves can typically be refurbished by either the original manufacturer or by a factory authorized repair facility for less than the replacement cost. Ensure refurbishers modify or replace pilot assemblies, tubing, and solenoids to meet specifications as outlined in Standard Design AW 78-24-28. As a minimum, replace non-ferrous pilot tube assemblies with either aluminum or stainless steel units. Provide stainless steel control tubing and replace all internal valve components. If the valve body is carbon steel, request Service Headquarters to determine if the valve body should be sand-blasted and cleaned or replaced. Coat or electro-nickel plate carbon steel bodies to meet Standard Design AW 78-24-28.

12.5.8 Hydrant Outlets. Remove and replace existing hydrant outlets and connections (e.g., Buckeye) with API adapters. Conversion to API adapters ensures compatibility with all refueling equipment. If adequate pressure control (regulating and surge) in accordance with Standard Design AW 78-24-28 does not exist at the hydrant pit or at the lateral control pit, then install a control valve at either location.

12.6 DIKES, LINERS, AND BASINS. If dikes, liners, and basins do not comply with the requirements of this handbook, 40 CFR 112, state, or local spill containment regulations and the potential for accidental fuel discharges exists, repair or

replace the existing structures. The provisions of Sections 8 of this handbook are applicable. In general, if the dike does not retain rainwater, improvements are necessary.

12.7 LEAK DETECTION. When rehabilitating fuel facilities, install leak detection, if necessary, as detailed in Section 2 of this handbook.

12.8 CATHODIC PROTECTION. When rehabilitating any fuel facility, install or upgrade cathodic protection. Ensure cathodic protection systems are designed by a NACE certified Corrosion Specialist or Cathodic Protection Specialist or a registered professional Corrosion Engineer. Install cathodic protection on all steel structures including, but not limited to, aboveground storage tanks, underground storage tanks, and underground piping systems. The provisions of Sections 2 and 8 of this handbook are applicable.

12.9 ISOLATION VALVES. To eliminate the need for costly system down-time, install double block and bleed valves for isolating components requiring maintenance and portions of transfer and hydrant system piping. Install blind flanges to conduct periodic hydrostatic testing. Comply with Standard Design AW 78-24-28 and the provisions of Sections 2, 3, and 4 of this handbook. Before adding isolation valves, evaluate piping system and make modifications to prevent pressure buildup created by thermal expansion. Review paragraph on relief valves in Section 9 of this handbook.

12.10 SOIL AND GROUNDWATER REMEDIATION. Monitor, store, and dispose of petroleum-contaminated soil disturbed during rehabilitation in accordance with state and local environmental regulations. Collect, test (if appropriate), and treat petroleum-contaminated groundwater removed during dewatering by one of the following methods:

a) Off-site disposal at an industrial waste facility.

b) On-site treatment with a portable groundwater treatment system.

c) Treatment through an oil/water separator.

d) Treatment through the sanitary sewer.

Prior to selecting a treatment method, review state and local environmental regulations and consult the facility for acceptable alternatives and permits required for on-site treatment and disposal.

12.11 LIQUEFIED PETROLEUM GAS (LPG) FACILITIES. When rehabilitating an LPG facility, back weld (seal weld) all existing threaded piping.

12.12 PIPELINE INSPECTION

12.12.1 Inspection. Conduct pipeline inspections in accordance with API 570.

12.12.2 Smart Pigging. To determine if or how a pipeline requires rehabilitation, information on the pipeline's structural integrity is essential. One method to survey the condition of the pipeline is to use smart pigs.

12.12.2.1 General. A "smart" or "intelligent" pig is one of a variety of instrumented tools using one or more physical or electro-mechanical principles for recording and measuring information for positioning and relative severity of anomalies in a pipeline. Smart pigs can detect cracks, metal loss, and curvature/bends. Other types available can map and profile pipe, detect leaks, perform photographic inspection, and sample product. Use of smart pigs may require modifying the pipeline to increase the radius of sharp elbows and eliminate obstructions caused by valves that are not full port type.

12.12.2.2 Types. The three basic types of smart pigs are ultrasonic, magnetic flux leakage (MFL), and eddy current. Ultrasonic, MFL, and eddy current pigs can be used in liquid pipelines. An alternative form of ultrasonic inspection is an electromagnetic acoustic transducer (EMAT). An EMAT can be used in either a liquid or gas pipeline. MFL can also be used in gas pipelines. Prior to choosing a smart pig, consider expected results, cost of various options, and expected pipeline condition.

12.13 CHECKLIST. The following is a checklist of items to be considered in a major rehabilitation.

a) Aboveground storage tank rehabilitation

(1) API Std 653 inspection.

(2) 36 inch (900 mm) diameter manholes for maintenance.

(3) Add double bottom.

(4) Repair and slope tank floor.

(5) Repair or replace floating roof.

(6) Product recovery system.

(7) Internal and external coating systems.

(8) Tank isolation valves.

(9) Fill and overfill protection.

(10) Corrosion protection to tank bottom.

(11) Leak detection.

(12) Automatic tank gauging system.

(13) Thermal expansion relief.

b) Underground storage tank rehabilitation

(1) 36 inch (900 mm) diameter manhole(s).

(2) Leak detection.

(3) Corrosion protection.

(4) Overfill protection.

(5) Interior coating.

c) Hydrant system rehabilitation

(1) Repair or replace pumps to API Std 610.

(2) Upgrade filter separators to comply with API Publ 1581.

(3) Remove automatic water drains from filter separators.

(4) Repair or replace control systems.

(5) Repair or replace electrical systems.

(6) Repair or replace lateral control valve pits and lids, including an impervious liner.

(7) Internal coating to carbon steel distribution pipe.

(8) Refurbish control valves.

(9) Hydrant outlets to API adapters.

(10) Replace lubricated valves and swivels with non-lubricated.

d) Truck fill/off-load stands

(1) Deadman and high level shut-off systems.

(2) Pantographs - convert from 3-inch to 4-inch (75 mm to 100 mm).

(3) Low profile filters.

(4) Thermal link shut-off valves (Army and Navy projects).

(5) Piping of pressure reliefs to contained tank.

(6) Updated meters and meter control valves.

(7) Adequacy of piping and system grounding.

(8) Adequacy of spill collection and containment.

(9) Upgrade military specification filter separators to comply with API 1581 elements. (Issue filters have priority over receipt filters.)

(10) Remove automatic water drains on filter/separators and ensure that any liquid drained from separators is properly handled.

e) Add isolation valves and blind flanges throughout system.

f) Use smart pigging to determine the condition of the distribution piping.

g) Monitor, remove, and dispose of petroleum-contaminated soil and groundwater.

h) Spill Containment and Collection.

(1) Concrete containment areas for dikes, equipment pads, fill stands, etc.

(2) Impervious lining system for dikes, containment areas, and catch basins.

(3) Oil/water separators for treatment of stormwater discharges from containment areas (e.g., dike areas, fill stands, equipment pads, etc.). Refer to Section 2 of this handbook for additional information.

Section 13: FUELING FACILITY TEMPORARY DEACTIVATION

13.1 INTRODUCTION. Follow the more stringent of local, state, or applicable guidelines of this section during the initial deactivation of a fueling facility. Follow the applicable subsection when temporarily deactivating a fueling facility for three months or more. For continuing maintenance issues and reactivation of a deactivated facility, refer to MIL-HDBK-1130. Additional guidelines for the deactivation of storage tanks and pipes are provided in API Std 2610 and NFPA 30, Appendix C. Federal regulations addressing out-of-service underground storage tank systems are in 40 CFR 280.

13.2 GENERAL REQUIREMENTS. Section 2, General Design Information, contains important information on fueling facilities. Do not begin the design of any deactivation plan without first becoming completely familiar with Section 2 of this handbook.

13.3 FUEL STORAGE AND DISTRIBUTION FACILITIES

13.3.1 Tanks. The following items apply to deactivation of all tanks in general.

a) Empty and clean tanks in accordance with of API Std 2015.

b) Provide water ballast with a copper sulphite solution (1 part copper sulphite to 3 million parts water) to discourage organic growth. Verify compatibility with environmental regulations prior to employing this solution.

c) Follow the procedures of MO-230 and 29 CFR 1910 when entering tanks or performing maintenance on tanks.

d) For tanks equipped with cathodic protection systems, inspect for proper operation and repair if necessary. For tanks not equipped with cathodic protection systems, investigate the economic trade-offs of installing those systems at deactivation versus the associated caretaker maintenance costs and various environmental protection concerns.

e) Mark each tank clearly with its status. Place a warning sign on the tank to indicate its current and former contents.

f) If required by state or local regulatory agencies, submit required documentation for “out-of-service” storage tanks.

13.3.1.1 Aboveground Tanks

a) Empty and evaluate for hazardous atmosphere as defined by 29 CFR 1910.146.

b) Wash and dry tank interior until visibly clean in accordance with API Std 2015.

c) Physically disconnect all fuel connections.

d) Treat the interiors of tanks that have been used to store fuel oil with a corrosion-preventive compound. For all other steel tanks, coat the unpainted interior surfaces with a preservative lubricating oil.

e) Close vents on lubricating oil tanks. Vents on other tanks should remain open.

f) Partially fill tanks subjected to high winds to prevent overturning. Use water except where there is the possibility of it freezing and rupturing the tanks. In those environments, use kerosene. Add caustic soda to the water to obtain a pH of 10 or a corrosion inhibitor. Determine the amount of liquid ballast required based on the expected winds, size of the tank, and specific gravity of the liquid used.

g) Comply with API Std 2015.

h) Comply with state and local environmental requirements.

13.3.1.2 Underground Tanks

a) Empty, evaluate for hazardous atmosphere as defined by 29 CFR 1910.146, and clean underground metal and concrete tanks.

b) Partially fill tanks insufficiently anchored against flotation with water to prevent buoyancy. Provide adequate safeguards where there is danger of the water freezing.

c) Provide a minimum of 12 inches (300 mm) of water in rubber-lined concrete tanks.

d) Leave vent lines on underground tanks open and make sure the vents are adequately screened.

e) Tightly cap or plug all other tank openings after removal of equipment.

f) Provide release detection where fuel is left in the tank.

g) Comply with 40 CFR 280 and any applicable state and local environmental regulations.

13.3.1.3 Tank Level Controls

a) Remove controls such as float control valves, float-operated gauges, low level cutoffs, water detector locks, and probes from tanks.

b) Clean, treat with corrosion-preventive compound, and store controls in a dry place.

13.3.2 Pipelines

a) Drain and vacuum extract all fuel from the pipeline.

b) If possible, pig the pipeline to remove any residual fuels.

c) Blind all flange connections and vents.

d) Charge the line with nitrogen gas.

e) Continue to provide cathodic protection and maintain the nitrogen charge.

f) Externally coat unpainted and unwrapped lines exposed to the weather with a corrosion-preventive compound.

13.3.2.1 Pipeline Equipment

a) Remove, clean, coat inside and outside with a light oil, and reinstall strainers.

b) Remove, clean, treat with corrosion-preventive compound, and store meters in a dry place.

c) Keep gaskets tight to prevent dirt and water from entering.

d) Remove, clean, grease, and store hydraulically operated diaphragm control valves in a dry place.

e) Paint exterior or treat with a corrosion-preventive compound and leave all other valves, such as plug valves and check valves in place.

f) Lubricate plug valves and leave in an open position.

g) Remove, tag, date, and store hoses in dry storage.

13.3.2.2 Fueling Pits

a) Inspect, tag, and secure fueling pits.

b) Make provisions for pumping pits dry.

13.4 FACILITIES

13.4.1 General Considerations

a) Make arrangements to retain the minimum amount of maintenance equipment.

b) Check and label all keys to all doors, gates, hatches, and other moving items.

c) Clean and repair as necessary all storm sewers, drainage ditches, and other drainage structures to prevent flooding and storm damage to roads, runways, tracks, and structures.

13.4.2 Fencing

a) Tighten connections at gates, posts, braces, guys, and anchorages to ensure stability and correct alignment.

b) Clean and lubricate all hinges, latches, locking devices, and all other alignment hardware.

c) Confine painting to those parts of fences and gates that show signs of corrosion.

13.4.3 Paved Surfaces

a) Unpaved shoulders

(1) Provide unpaved shoulders with only the repairs necessary to ensure positive drainage of surface water from the adjoining pavement.

(2) Fill holes and ruts and blade ridges to eliminate standing water.

(3) Backfill depressions when the undermining of pavement is threatened.

(4) When possible, retain existing ground cover.

b) Concrete pavements

(1) Repair concrete pavements only as required to perform service activities and to prevent severe disintegration.

(2) Patch bituminous surfaces of depressed or broken slabs to prevent ponding of water and the resultant saturation of the subgrade.

(3) Seal joints and cracks in concrete pavement with bituminous material.

c) Bituminous pavements

(1) Limit surface repairs of bituminous pavements to the repair of holes, raveled areas, edge failures, and open cracks.

(2) Repair unused surfaces only as necessary to maintain drainage and to prevent the ponding of surface water.

Section 14: FUELING FACILITY CLOSURE

14.1 CLOSURE REQUIREMENTS. Follow the more stringent of local, state, or applicable guidelines in this section when permanently closing a fuel facility or a portion of a fuel facility. Additional guidance on closure and disposal of storage tanks is available in Appendix C of NFPA 30 and API Std 2610.

14.1.1 Aboveground Tanks

a) Physically disconnect all fuel connections.

b) Remove fuel.

c) Clean tank in accordance with API Std 2015.

d) Dismantle the tank and dispose of as scrap steel.

e) Comply with API Publ 2202.

f) Comply with state and local environmental requirements.

14.1.2 Underground Tanks

a) Perform a soil and groundwater analysis to determine if a fuel release occurred.

b) Review and comply with 40 CFR 280 and any applicable state and local environmental regulations.

c) If allowed by federal, state, and local regulations, perform closure in place, as outlined in API RP 1604. However, this alternative may be more expensive than removal for small volume tanks. Abandoning in place also impedes soil clean-up and future land use.

d) If removal is required, excavate and dispose of the tank in accordance with API RP 1604.

e) Comply with applicable guide specifications and EM 1110-3-178.

14.1.3 Pipelines

a) Physically disconnect the pipeline from any active fuel systems.

b) Remove all fuel and pig to remove any residual fuel.

c) Purge the pipeline to remove all vapors. Do not use water as flushing media.

d) Excavate the line only if required by federal, state, or local regulations or if deemed necessary by Service Headquarters for land reuse.

e) Report any contaminated soil or groundwater discovered during excavation to the appropriate state and local environmental authorities.

f) If excavation is not performed, fill the pipeline with cellular concrete or other acceptable inert solid material allowed by regulations requiring the filling. Consider the lowest cost from the acceptable materials list.

14.2 GENERAL REQUIREMENTS. Section 2, General Design Information, contains important information on fueling facilities. Do not begin the design or modification of any closure plan without first becoming completely familiar with Section 2 of this handbook.

14.3 INVENTORY. Prepare an inventory of valuable fueling hardware which could be easily salvaged and reused at another base. Equipment such as pantographs, control valves, pumps, and filtration equipment are always in demand. Submit list to your command fuels engineer.

PETROLEUM FUEL FACILITIES

FACILITY PLATES

Plate No.	Title	Page No.
001	Handbook Section Identification Plan	219
002	Tank Truck and Car Facilities Tank Truck Layout Plan	220
003	Tank Truck and Car Facilities Tank Truck Equipment Plan	221
004	Tank Truck and Car Facilities Tank Car Layout and Equipment Plan	222
005	Tank Truck and Car Facilities Air Elimination Drop Tank	223
006	Refueler Truck Facilities Layout Plan	224
007	Refueler Truck Facilities Equipment Plan	225
008	Aircraft Direct Fueling Systems Large Frame Aircraft On-Apron Fueling Positions	226
009	Aircraft Direct Fueling Systems Small Frame Aircraft Fueling Lane and Apron Edge	227
010	Aircraft Direct Fueling Systems Small Frame Aircraft In-Shelter Fueling Positions	228
011	Ground Vehicle Fueling Facilities GOV Fueling Station Plan	229
012	Ground Vehicle Fueling Facilities Tactical Refueler Fill Stand Plan	230
013	Ground Vehicle Fueling Facilities Tactical Refueler Equipment Plan	231
014	Aboveground Vertical Storage Tanks Tank Foundation Section	232
015	Aboveground Vertical Storage Tanks Center Sump Layout	233
016	Aboveground Vertical Storage Tanks Inlet Fill Connection	234
017	Aboveground Vertical Storage Tanks Pump Suction and Water Drawoff Connections	235
018	Horizontal Underground Storage Tanks Inlet Fill Connection	236
019	Horizontal Aboveground Storage Tanks Inlet Fill Connection	237
020	Earthen Dikes	238
021	Piping Systems Sliding Pipe Support	239
022	Piping Systems Sliding Pipe Support	240
023	Piping Systems Anchor Pipe Support	241

Plate No.	Title	Page No.
024	Piping Systems Anchor Pipe Support	242
025	Aviation System Filtration Location and Piping Materials	243
026	Thermal Relief Piping Systems Integral Valve and Conventional	244
027	Thermal Relief Piping Systems Equipment Pumphouse or Pads	245
028	Thermal Relief Piping Systems Tank Truck and Refueler Racks	246
029	Thermal Relief Piping Systems Storage Tanks	247
030	Liquefied Petroleum Gas Facilities Small Volume Facility for Trucks and Cylinders	248
031	Liquefied Petroleum Gas Facilities Large Volume Facility for Tank Cars and Water Vessels	249
032	Liquefied Petroleum Gas Facilities Tank Spacing Requirements	250
033	Liquefied Petroleum Gas Facilities Tank Spacing Requirements	251

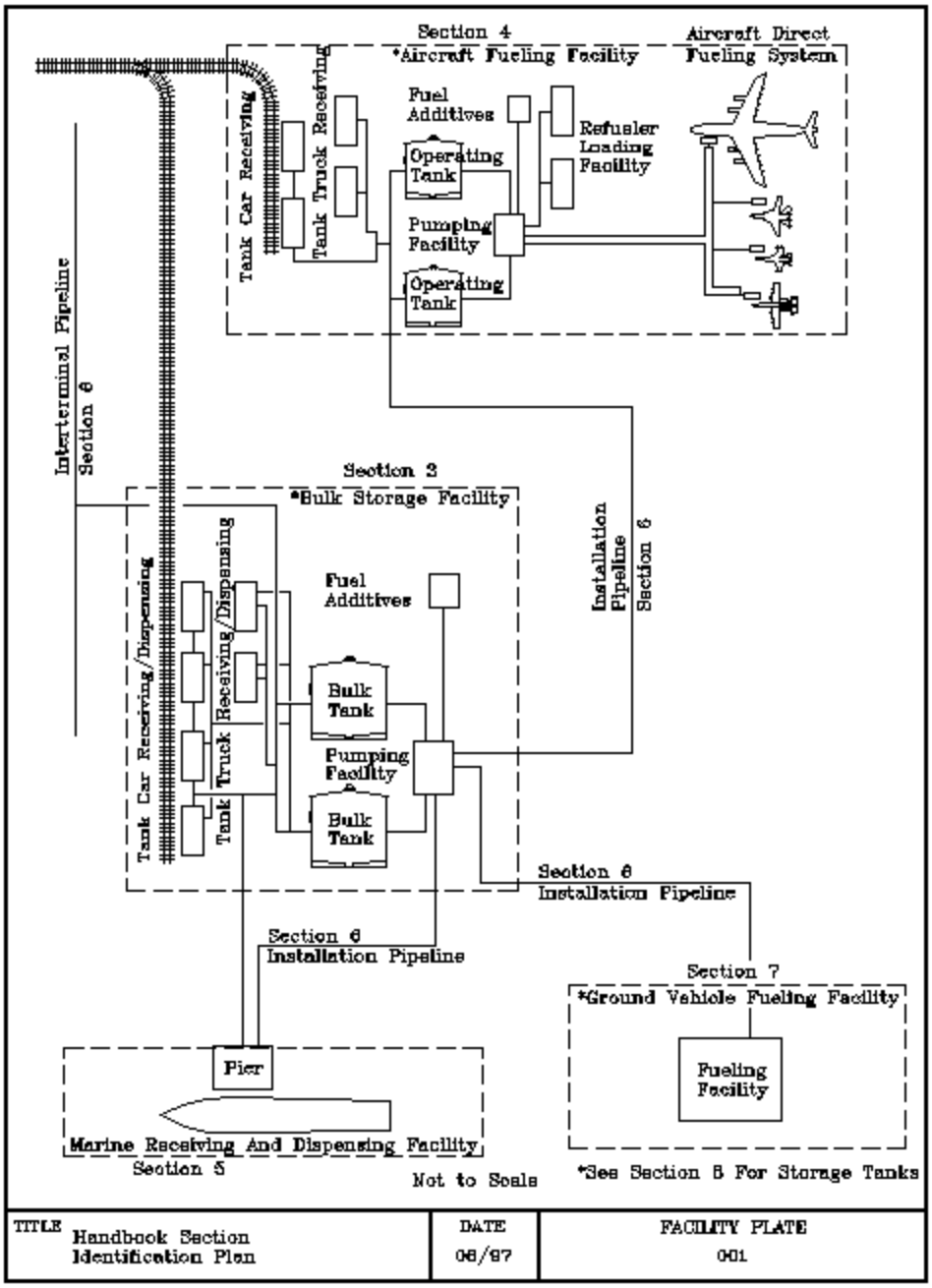
Section 4
*Aircraft Fueling Facility
Aircraft Direct Fueling System
Tank Car Receiving
Tank Truck Receiving
Fuel Additives
Operating Tank
Refueler Loading Facility
Pumping Facility
Operating Tank
Interterminal Pipeline
Section 6
Section 3
*Bulk Storage Facility
Installation Pipeline
Section 6
Tank Car Receiving/Dispensing
Tank Truck Receiving/Dispensing
Fuel Additives
Bulk Tank
Pumping Facility
Bulk Tank
Section 6
Installation Pipeline
Section 6
Installation Pipeline
Section 7
*Ground Vehicle Fueling Facility
Fueling Facility
Pier
Marine Receiving And Dispensing Facility
Section 5
Not to Scale
*See Section 5 For Storage Tanks
TITLE
Handbook Section Identification Plan
DATE
06/97
FACILITY PLATE
001

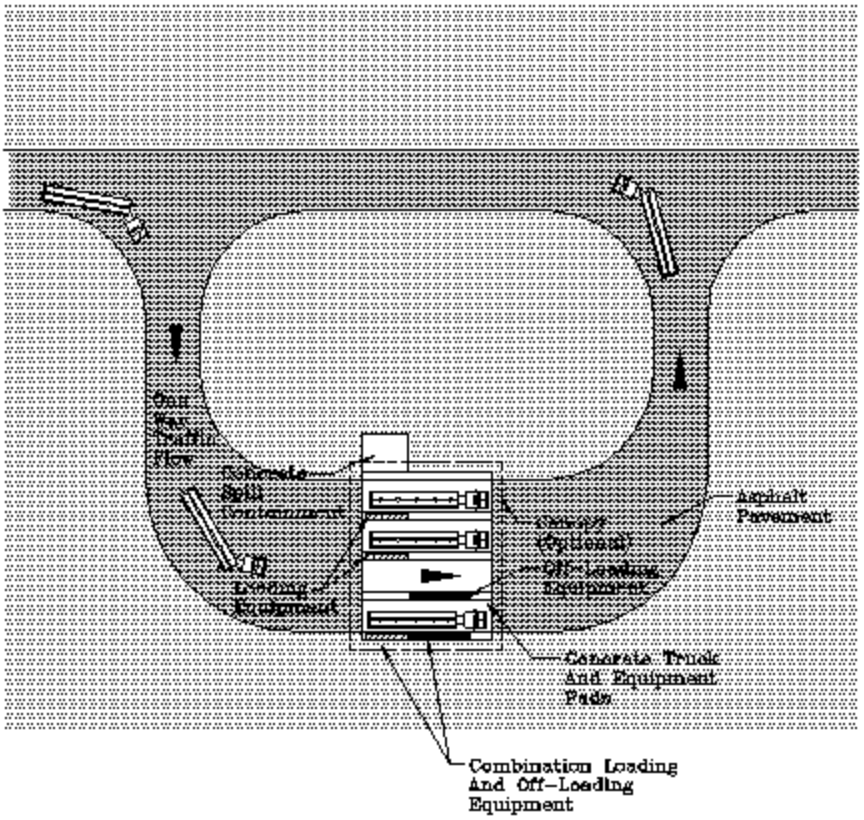

TANK TRUCK LAYOUT PLAN

Not to Scale

TITLE	DATE	FACILITY PLATE
Tank Truck And Car Facilities Tank Truck Layout Plan	08/97	002

MIL-HDBK-1022A

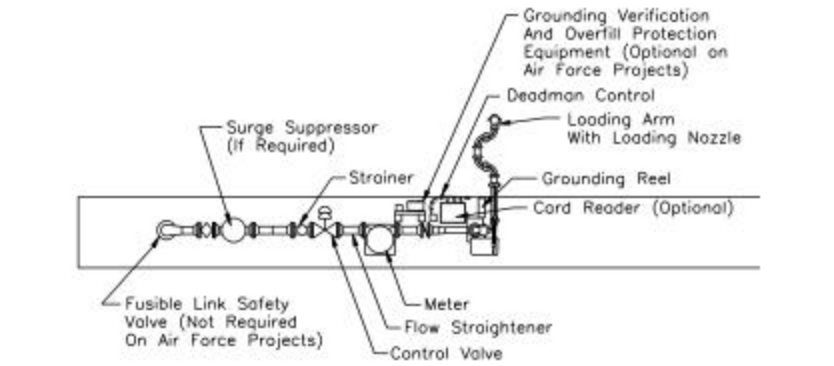

LOADING EQUIPMENT

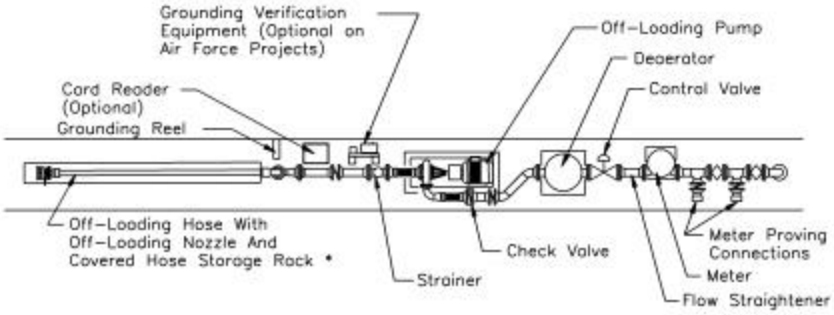

OFF-LOADING EQUIPMENT

* NOTE:
PROVIDE OFF-LOAD HOSE MANIFOLD WITH NUMBER OF HOSES TO MATCH TRUCK COMPARTMENTS. MINIMUM REQUIREMENT IS TWO.

Not to Scale

TITLE	DATE	FACILITY PLATE
Tank Truck And Car Facilities Tank Truck Equipment Plan	08/99	003

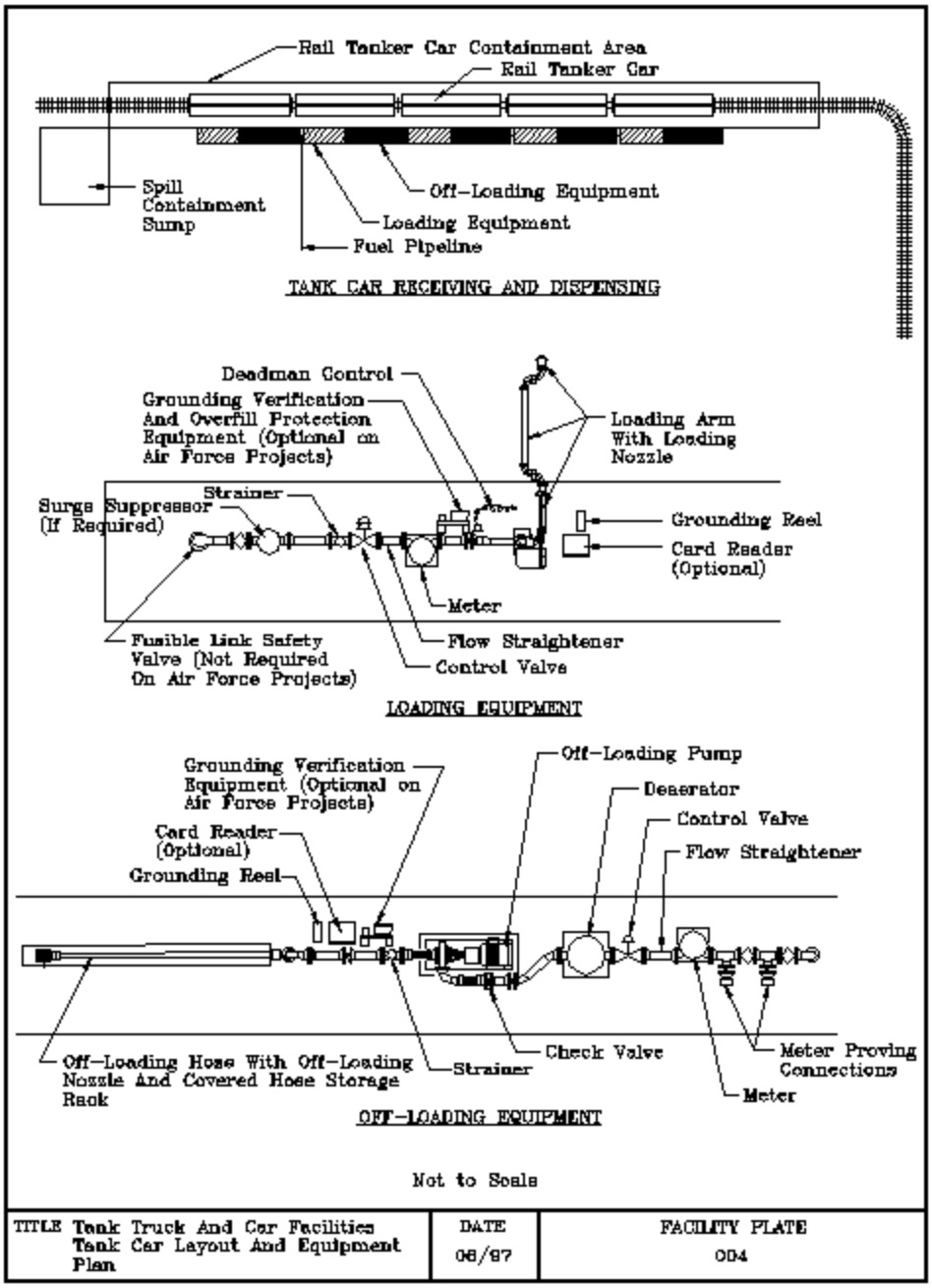
Rail Tanker Car Containment Area
Rail Tanker Car
Spill Containment Sump
Off-Loading Equipment
Loading Equipment
Fuel Pipeline
TANK CAR RECEIVING AND DISPENSING
Deadman Control
Grounding Verification And Overfill Protection Equipment (Optional on Air Force Projects)
Loading Arm With Loading Nozzle
Strainer
Surge Suppressor (If Required)
Grounding Reel
Card Reader (Optional)
Meter
Fusible Link Safety Valve (Not Required On Air Force Projects)
Flow Straightener
Control Valve
LOADING EQUIPMENT
Grounding Verification Equipment (Optional on Air Force Projects)
Off-Loading Pump
Deaerator
Control Valve
Card Reader (Optional)
Flow Straightener
Grounding Reel
Check Valve
Meter Proving Connections
Off-Loading Hose With Off-Loading Nozzle And Covered Hose Storage Rack
Strainer
Meter
OFF-LOADING EQUIPMENT
Not to Scale
TITLE Tank Truck And Car Facilities Tank Car Layout And Equipment Plan
DATE 08/97
FACILITY PLATE 004

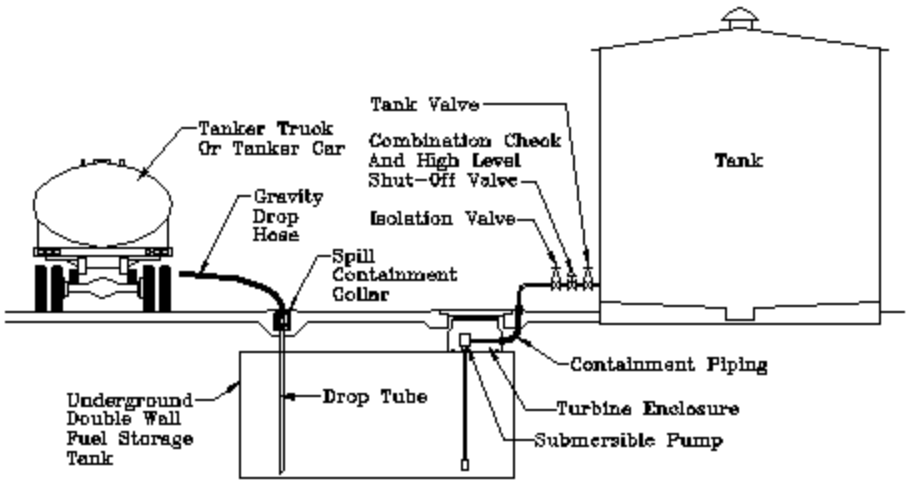

UNDERGROUND DROP TANK

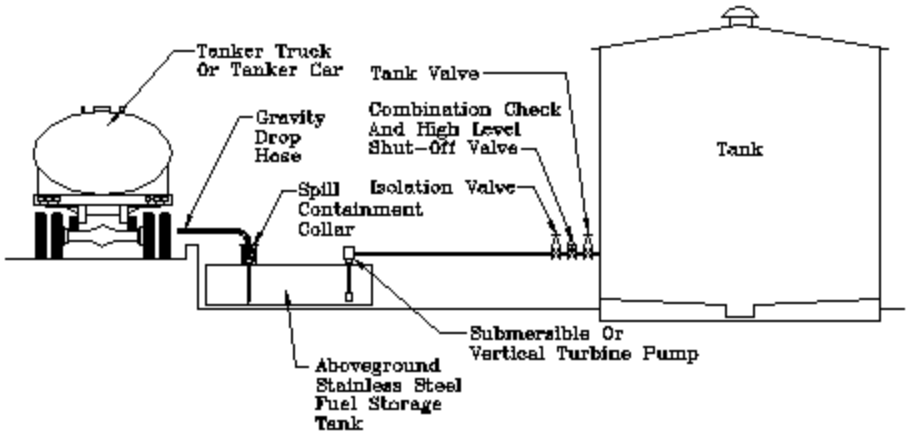

ABOVEGROUND LOW PROFILE TANK

Not to Scale

TITLE	DATE	FACILITY PLATE
Tank Truck And Car Facilities Air Elimination Drop Tank	08/97	005

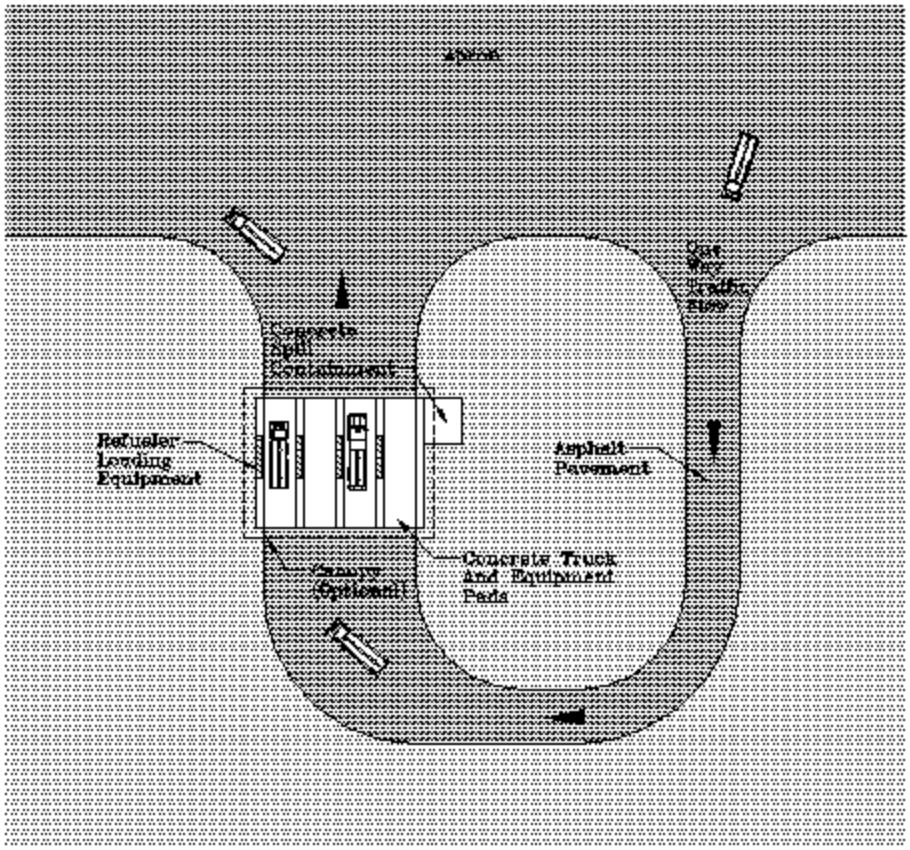

REFUELER TRUCK LOADING LAYOUT PLAN

Not to Scale

TITLE	DATE	FACILITY PLATE
Refueler Truck Facilities Layout Plan	06/97	006

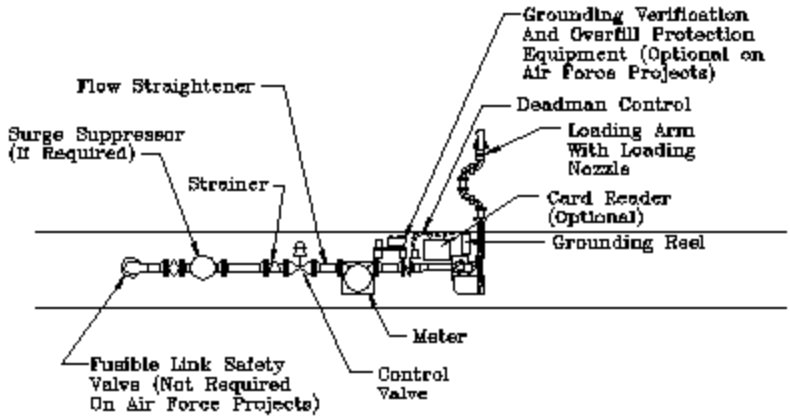

LOADING EQUIPMENT – FROM LATERALS OR
NONFERROUS AIRCRAFT DIRECT FUELING SYSTEMS

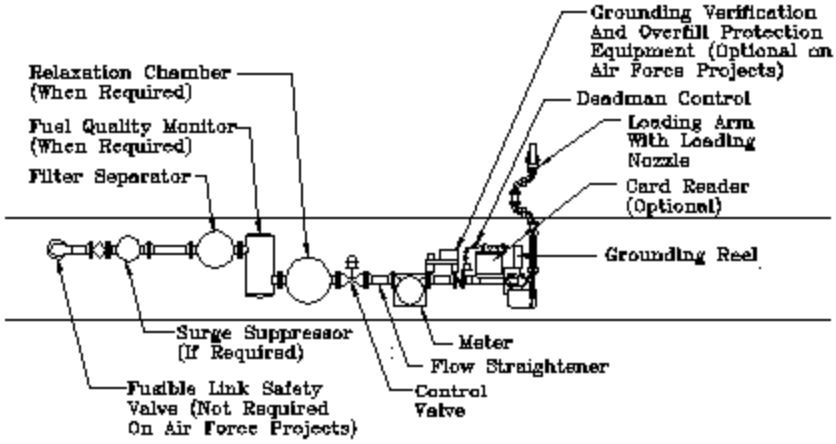

LOADING EQUIPMENT – STAND ALONE

Not to Scale

TITLE	DATE	FACILITY PLATE
Refueler Truck Facilities Equipment Plan	08/97	007

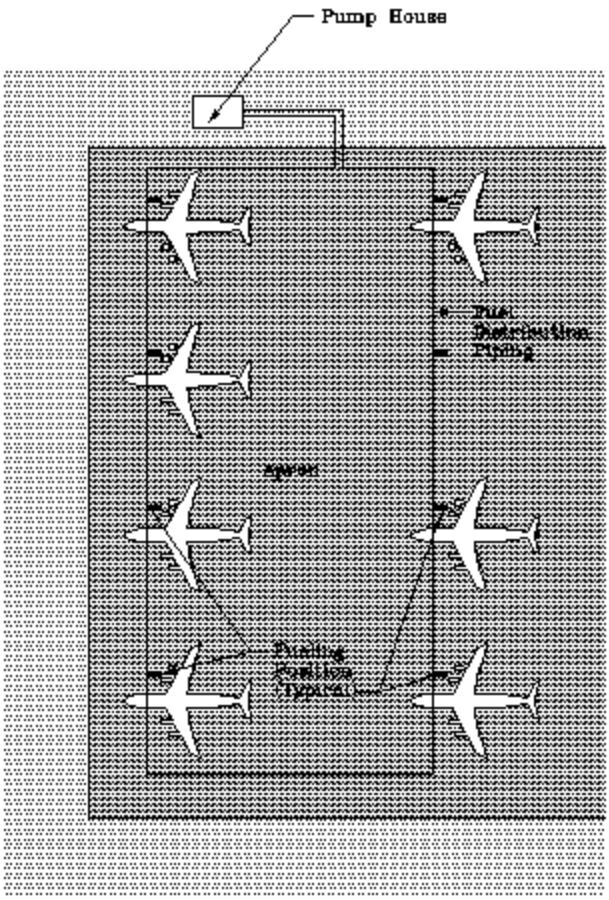

Not to Scale

TITLE Aircraft Direct Fueling Systems Large Frame Aircraft On-Apron Fueling Positions	DATE 08/97	FACILITY PLATE 008

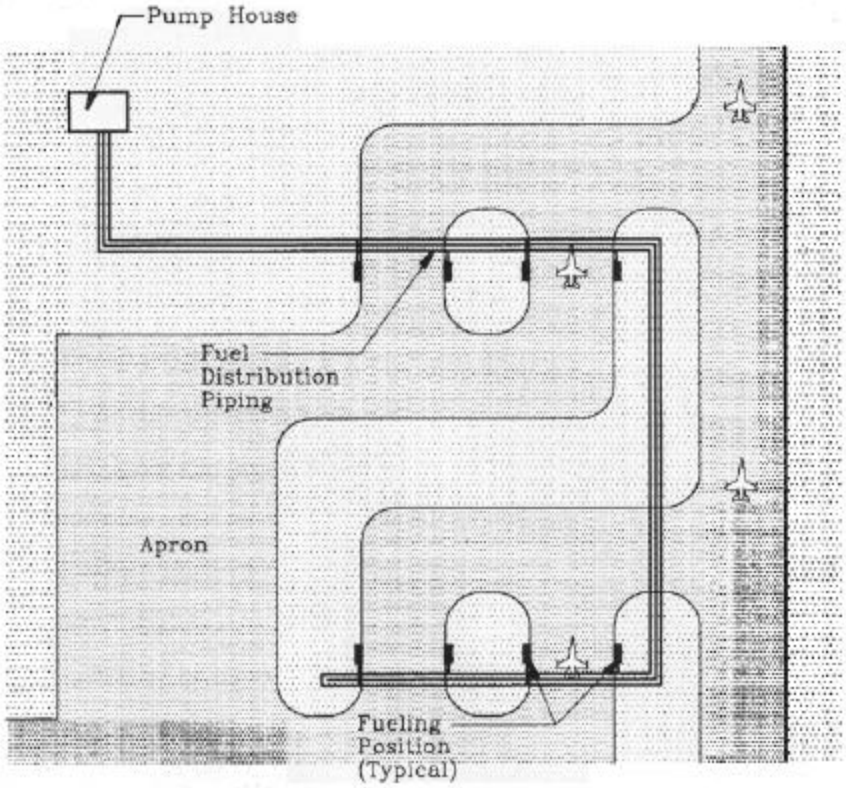

FUELING LANE

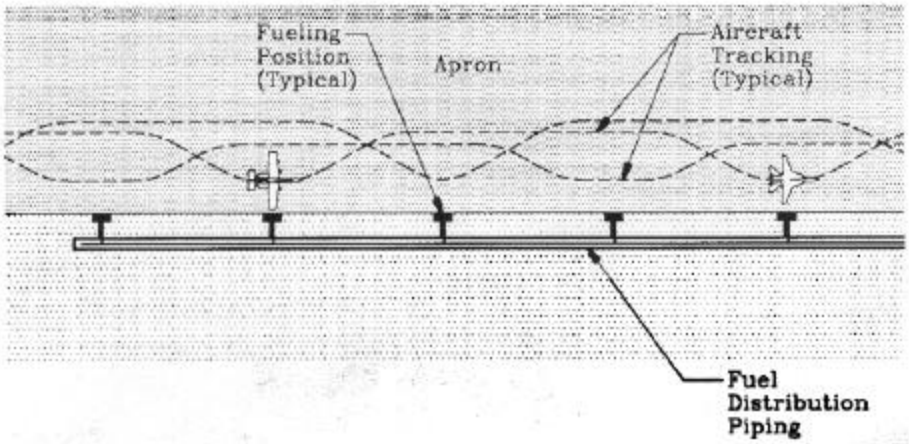

APRON EDGE

Not to Scale

TITLE Aircraft Direct Fueling Systems Small Frame Aircraft Fueling Lane And Apron Edge	DATE 06/97	FACILITY PLATE 009

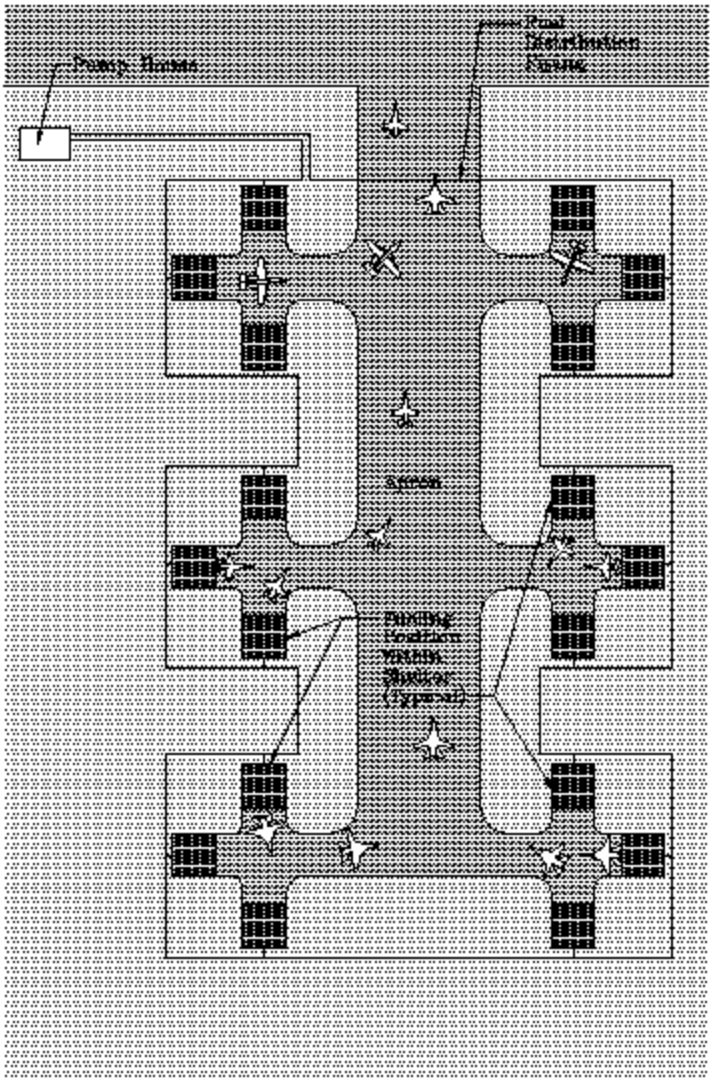

Not to Scale

TITLE Aircraft Direct Fueling Systems Small Frame Aircraft In-Shelter Fueling Positions	DATE 08/97	FACILITY PLATE 010

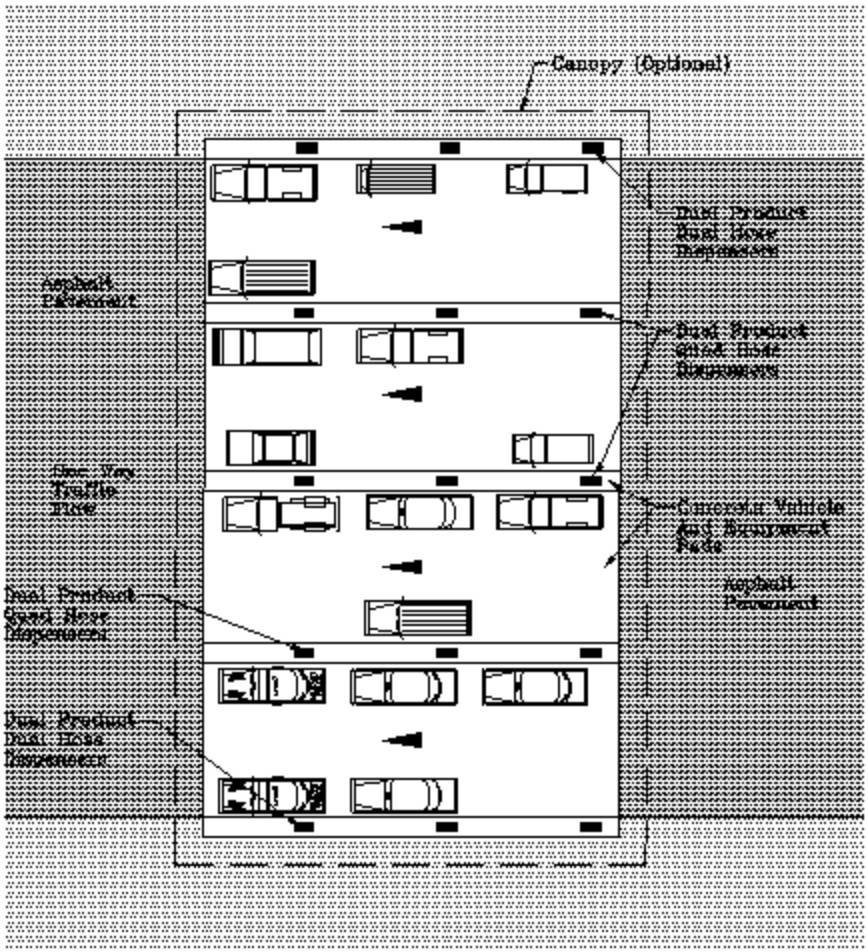

GOV FUELING STATION PLAN

Not to Scale

TITLE	DATE	FACILITY PLATE
Ground Vehicle Fueling Facilities GOV Fueling Station Plan	08/97	011

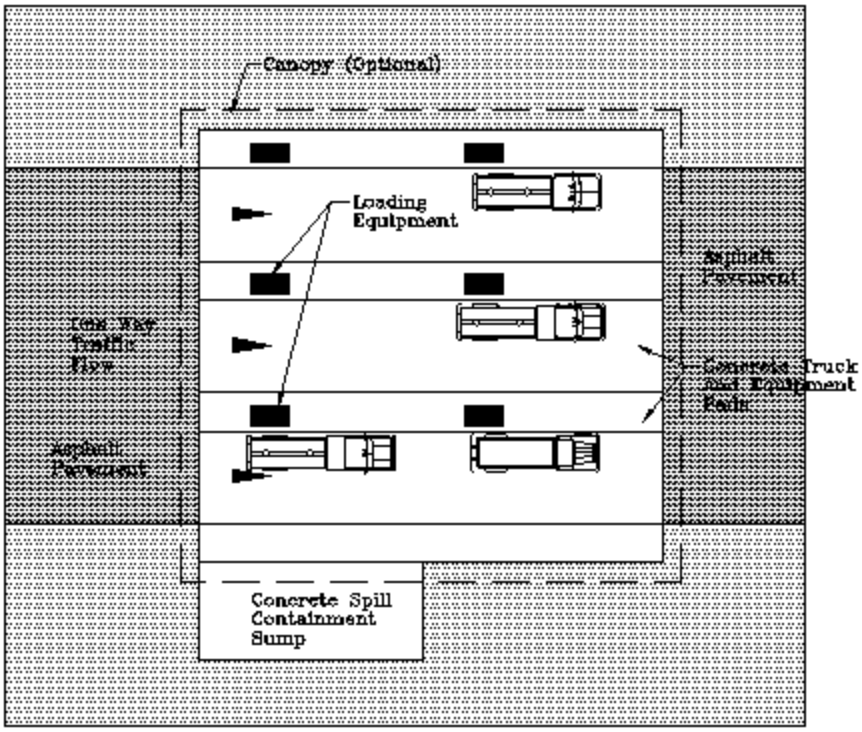

TACTICAL REFUELER FILL STAND PLAN

Not to Scale

TITLE	DATE	FACILITY PLATE
Ground Vehicle Fueling Facilities Tactical Refueler Fill Stand Plan	06/97	012

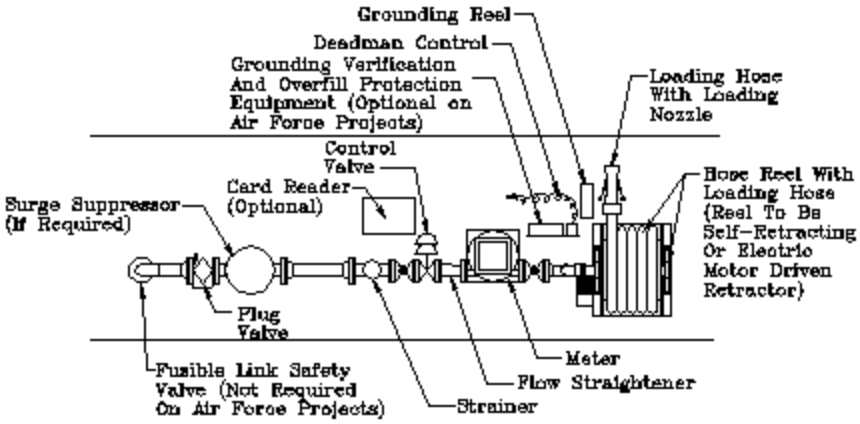

LOADING EQUIPMENT WITH HOSE REEL

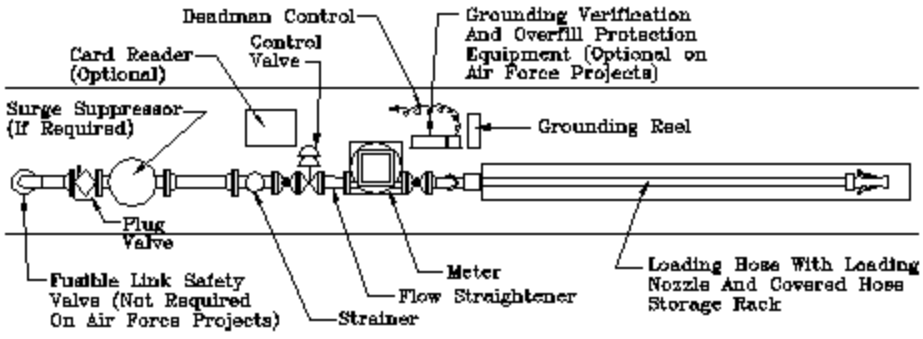

LOADING EQUIPMENT WITH HOSE

Not to Scale

TITLE	DATE	FACILITY PLATE
Ground Vehicle Fueling Facilities Tactical Refueler Equipment Plan	06/97	013

MIL-HDBK-1022A

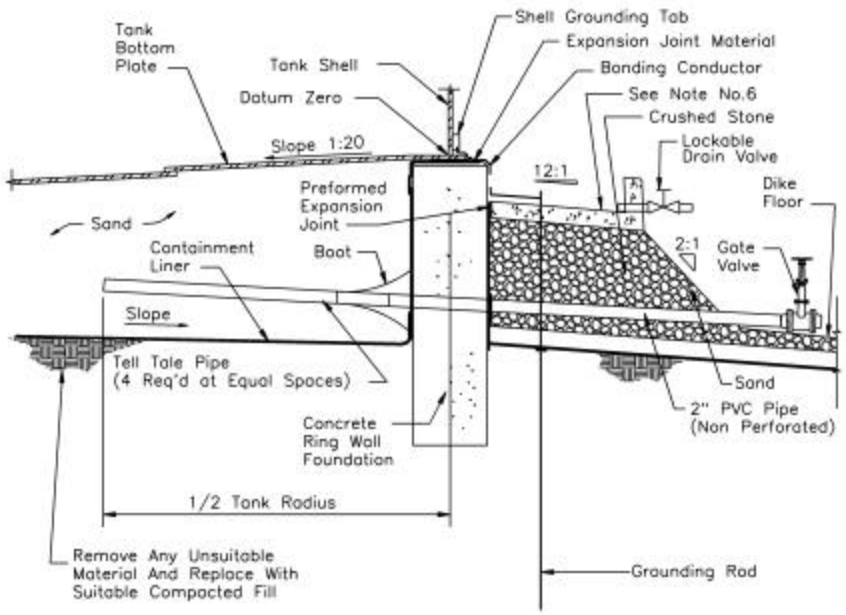

Notes:
1. Containment Liner To Be Fuel Resistant.
2. Dike Floor To Be 8-inch (200 mm) Gravel Over 6-inch (150 mm) Sand Base On Top Of Containment Liner Or 4-inch (100 mm) Reinforced Concrete Slab With An Approved Surface Sealant Containment System.
3. Top Of Ringwall To Be A Minimum Of 12 inches (400 mm) Above Surrounding Grade.
4. Bottom Of Ringwall Foundation To Extend Below The Frost Line At The Site Location.
5. Bottom Of Ringwall Foundation To Extend Below The Bottom Of Any Soft Materials.
6. Optional Curbed Concrete Work Surface Around Maintenance Areas Such As, Manholes/Manways, Stairs, Ladders And Valves.

Not to Scale

TITLE Aboveground Vertical Storage Tanks Tank Foundation Section	DATE 08/99	FACILITY PLATE 014

MIL-HDBK-1022A

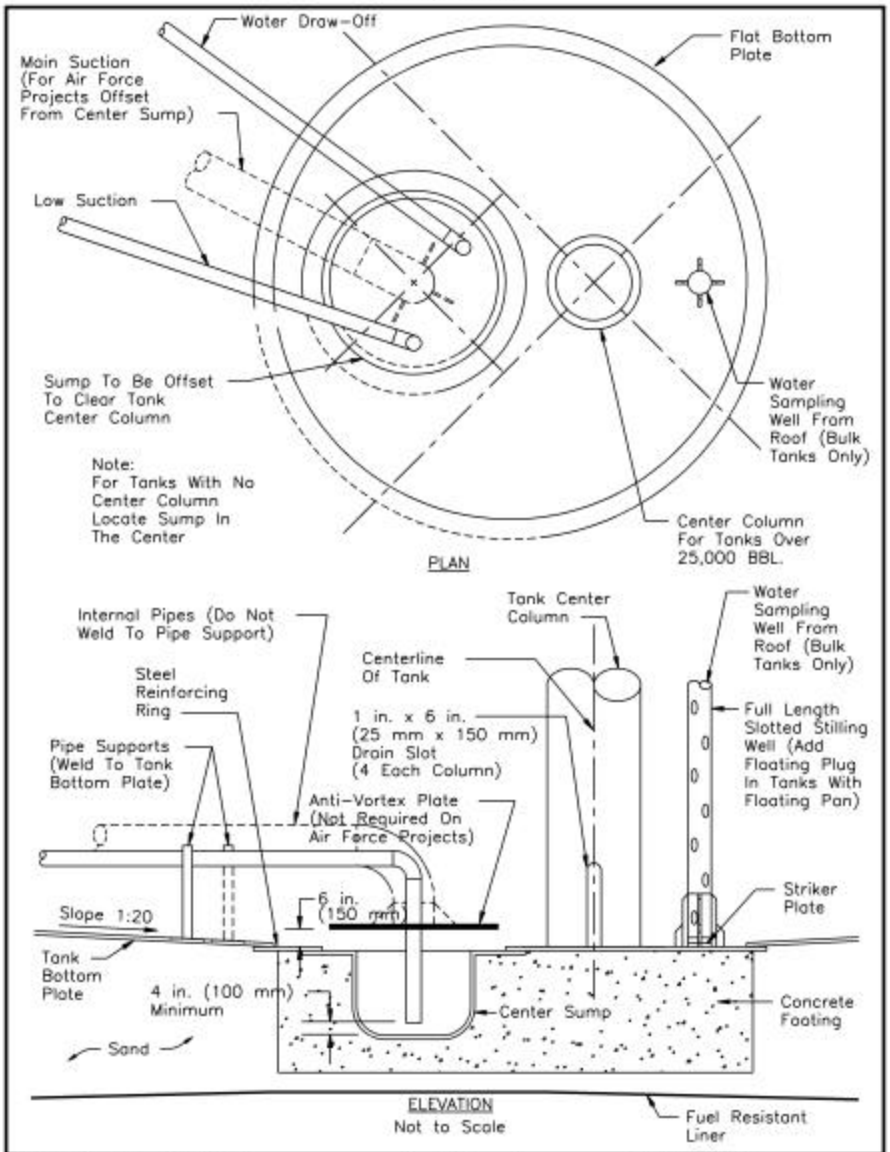

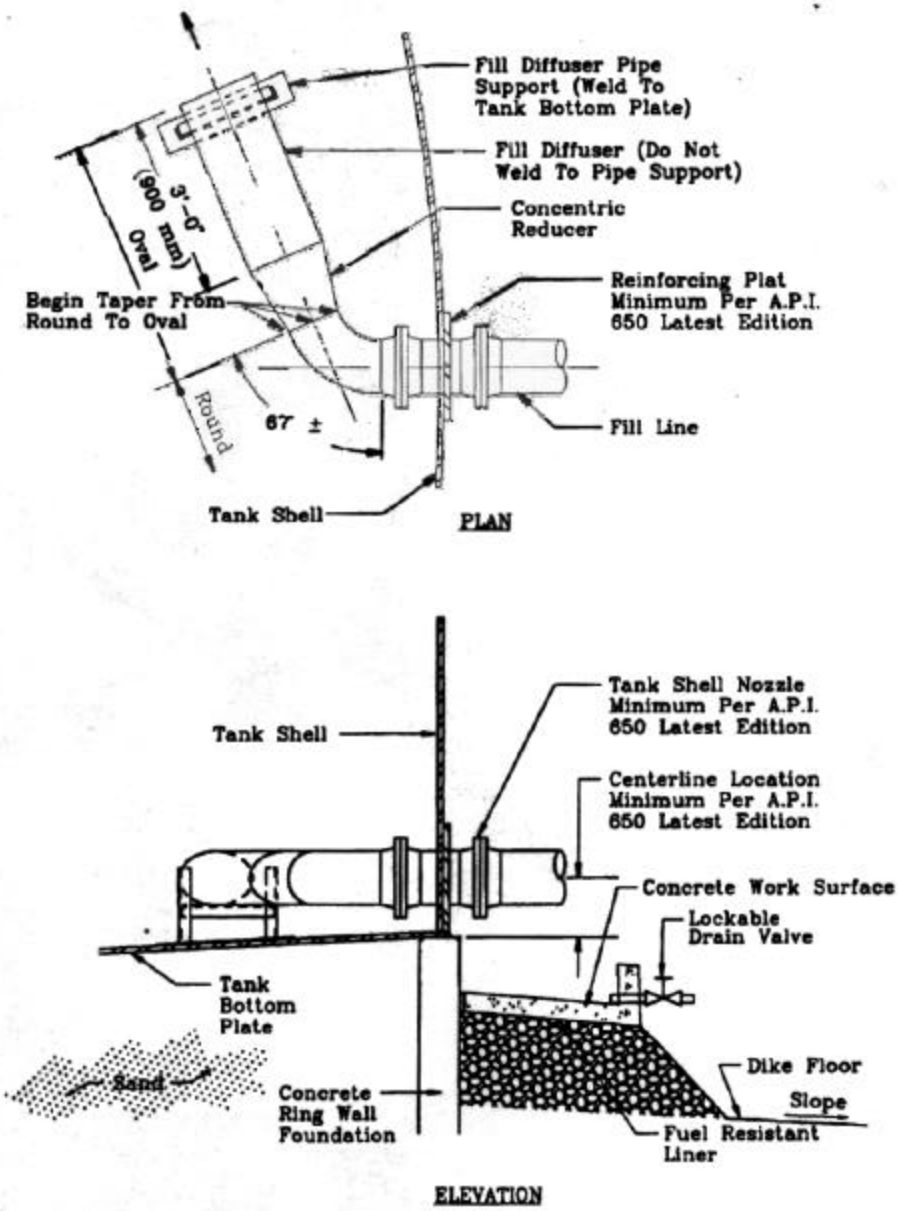

Not to Scale

TITLE Aboveground Vertical Storage Tanks Inlet Fill Connection	DATE 06/97	FACILITY PLATE 016

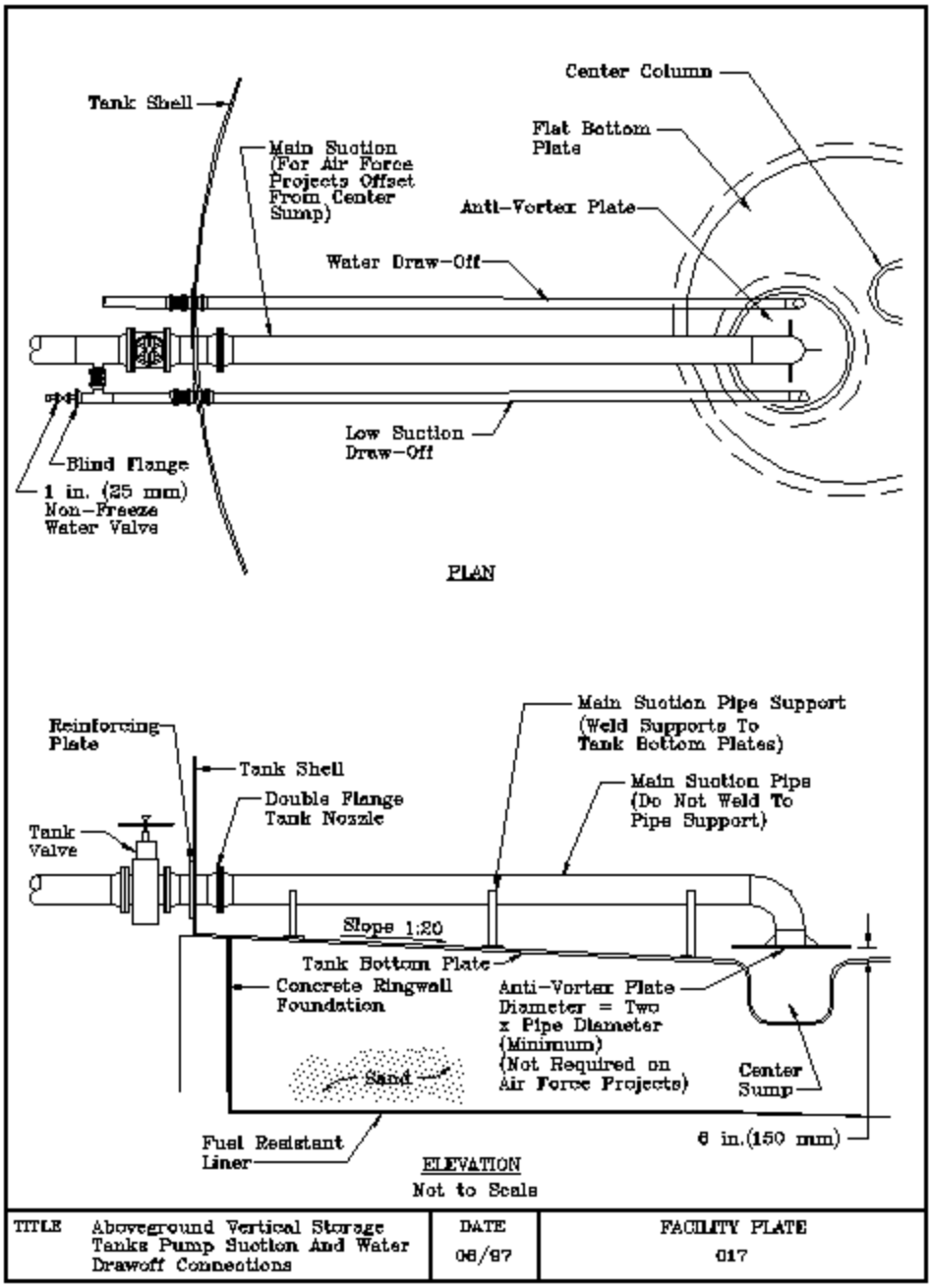
Center Column
Tank Shell
Flat Bottom Plate
Main Suction (For Air Force Projects Offset From Center Sump)
Anti-Vortex Plate
Water Draw-Off
Low Suction Draw-Off
Blind Flange
1 in. (25 mm) Non-Freeze Water Valve
PLAN
Main Suction Pipe Support (Weld Supports To Tank Bottom Plates)
Reinforcing Plate
Tank Shell
Double Flange Tank Nozzle
Main Suction Pipe (Do Not Weld To Pipe Support)
Tank Valve
Slope 1:20
Tank Bottom Plate
Concrete Ringwall Foundation
Anti-Vortex Plate Diameter = Two x Pipe Diameter (Minimum) (Not Required on Air Force Projects)
Sand
Center Sump
Fuel Resistant Liner
6 in.(150 mm)
ELEVATION
Not to Scale
TITLE
Aboveground Vertical Storage Tanks Pump Suction And Water Drawoff Connections
DATE
08/97
FACILITY PLATE
017

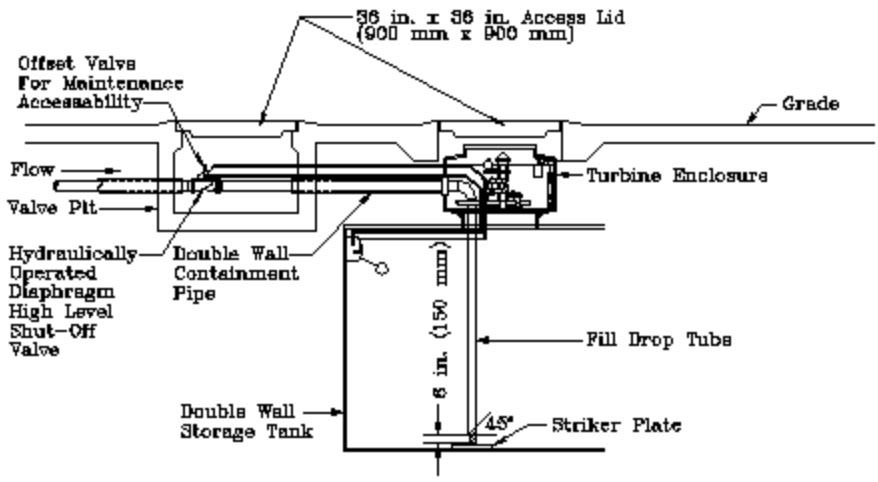

HORIZONTAL UNDERGROUND PUMPED FILL CONNECTION

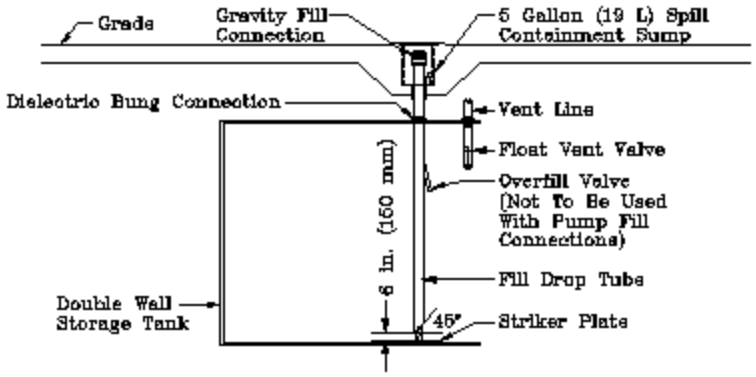

HORIZONTAL UNDERGROUND GRAVITY DROP FILL CONNECTION

Not to Scale

TITLE	Horizontal Underground Storage Tanks Inlet Fill Connection	DATE 06/97	FACILITY PLATE 018

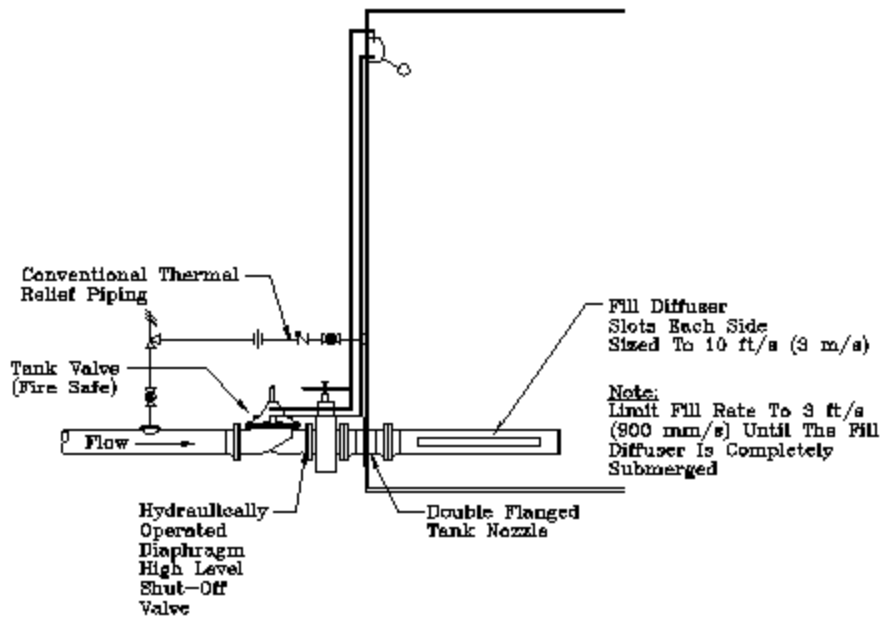

HORIZONTAL ABOVEGROUND PUMPED FILL CONNECTION

Not to Scale

TITLE	Horizontal Aboveground Storage Tanks Inlet Fill Connection	DATE 08/97	FACILITY PLATE 019

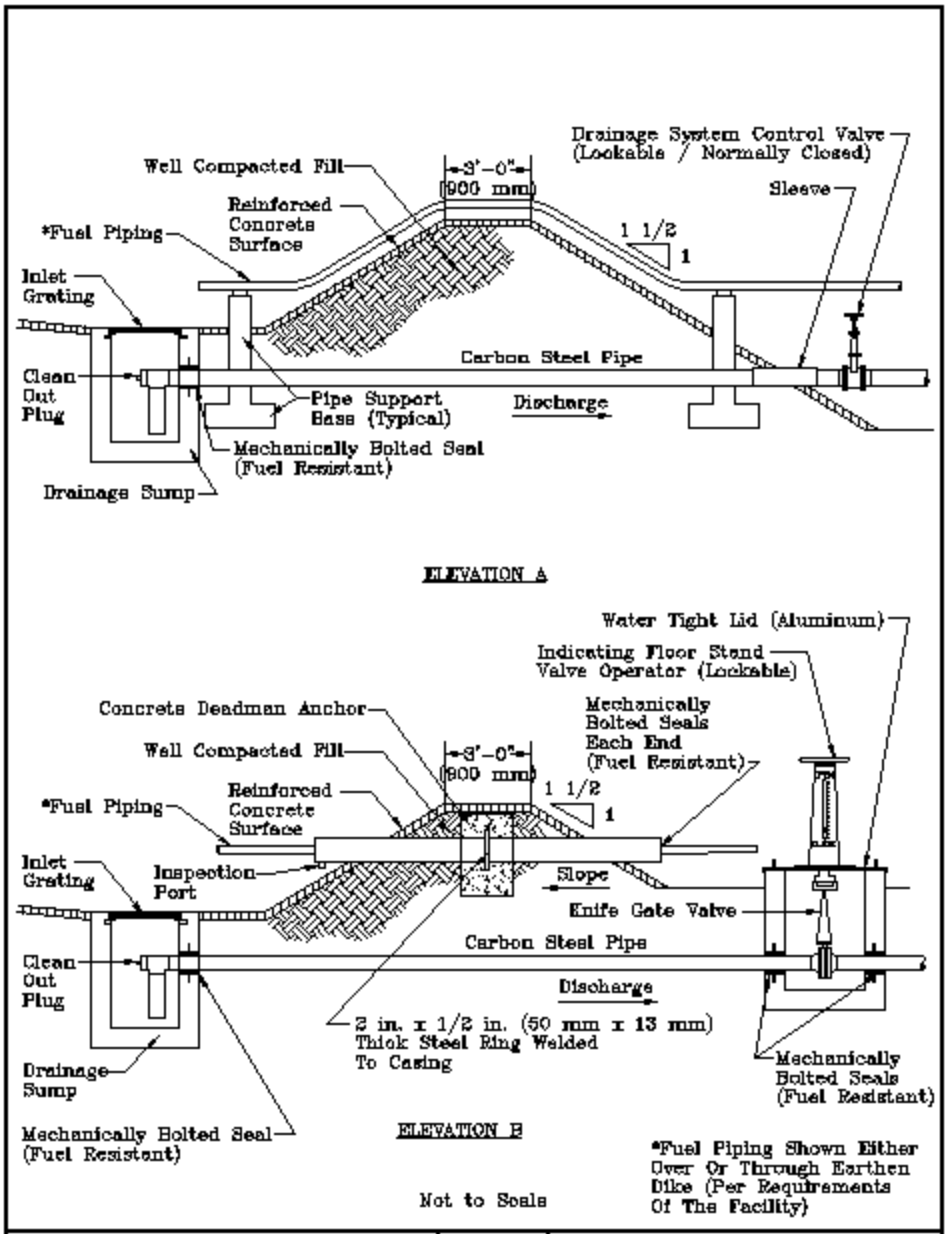

TITLE	DATE	FACILITY PLATE
Earthen Dikes	08/97	020

MIL-HDBK-1022A

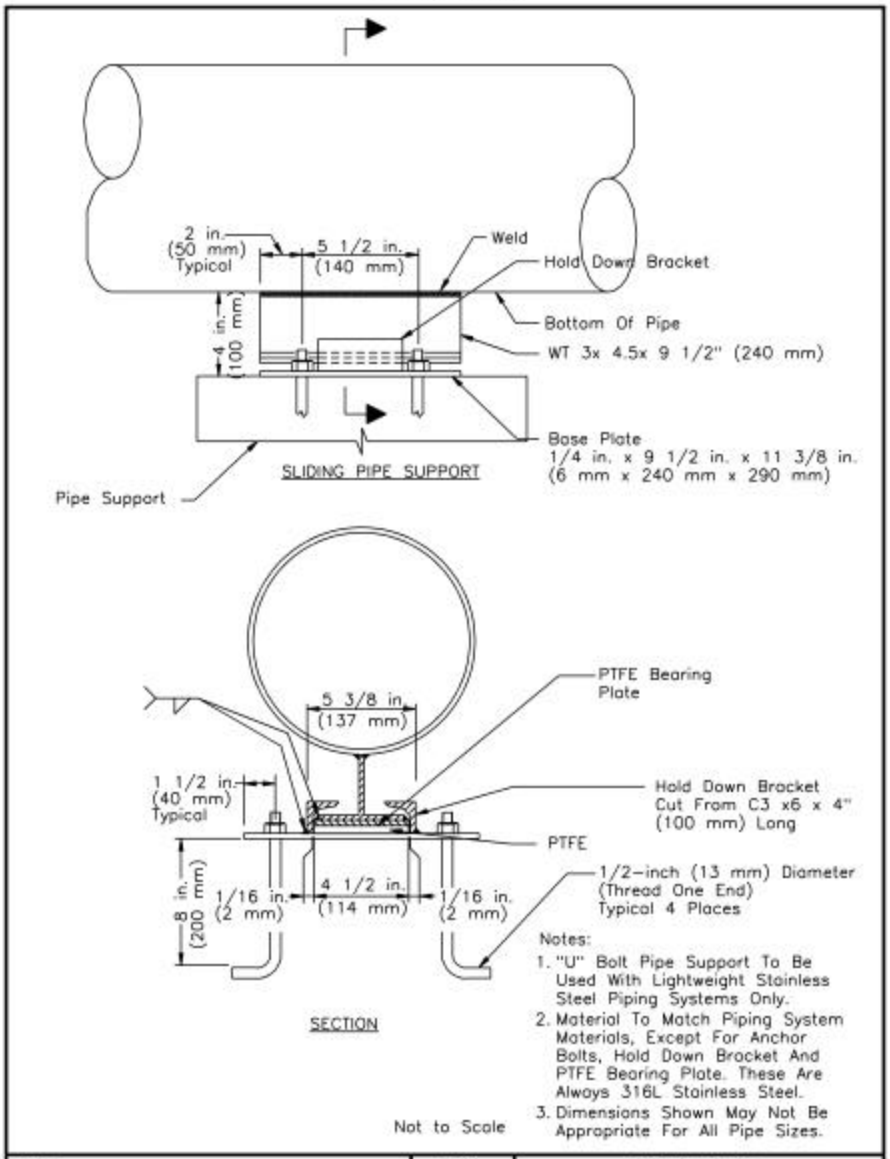

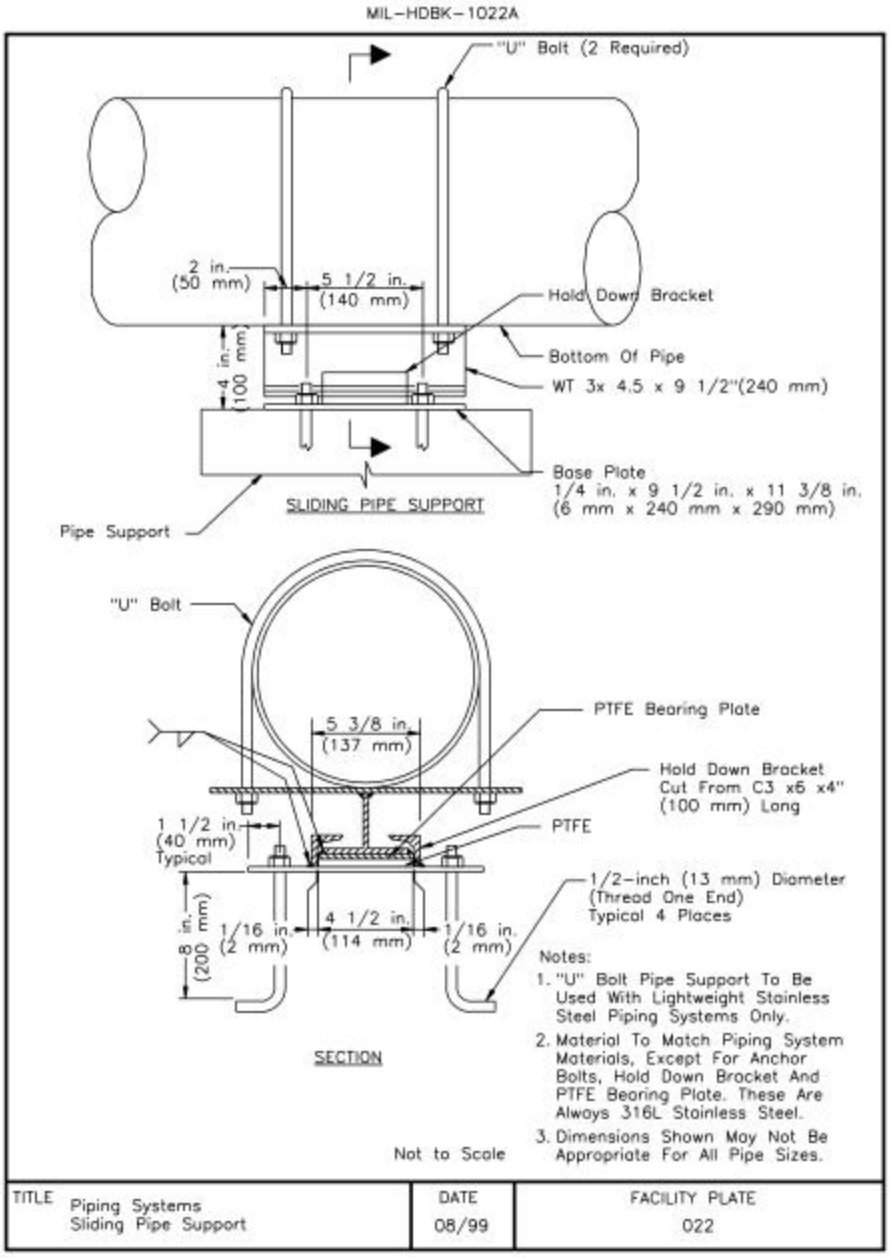
MIL-HDBK-1022A
"U" Bolt (2 Required)
2 in. (50 mm)
5 1/2 in. (140 mm)
Hold Down Bracket
Bottom Of Pipe
4 in. (100 mm)
WT 3x 4.5 x 9 1/2"(240 mm)
Base Plate
1/4 in. x 9 1/2 in. x 11 3/8 in.
(6 mm x 240 mm x 290 mm)
SLIDING PIPE SUPPORT
Pipe Support
"U" Bolt
PTFE Bearing Plate
5 3/8 in. (137 mm)
Hold Down Bracket
Cut From C3 x6 x4"
(100 mm) Long
1 1/2 in. (40 mm) Typical
PTFE
1/2-inch (13 mm) Diameter
(Thread One End)
Typical 4 Places
8 in. (200 mm)
1/16 in. (2 mm)
4 1/2 in. (114 mm)
1/16 in. (2 mm)
Notes:
1. "U" Bolt Pipe Support To Be Used With Lightweight Stainless Steel Piping Systems Only.
2. Material To Match Piping System Materials, Except For Anchor Bolts, Hold Down Bracket And PTFE Bearing Plate. These Are Always 316L Stainless Steel.
3. Dimensions Shown May Not Be Appropriate For All Pipe Sizes.
SECTION
Not to Scale
TITLE Piping Systems Sliding Pipe Support
DATE 08/99
FACILITY PLATE 022

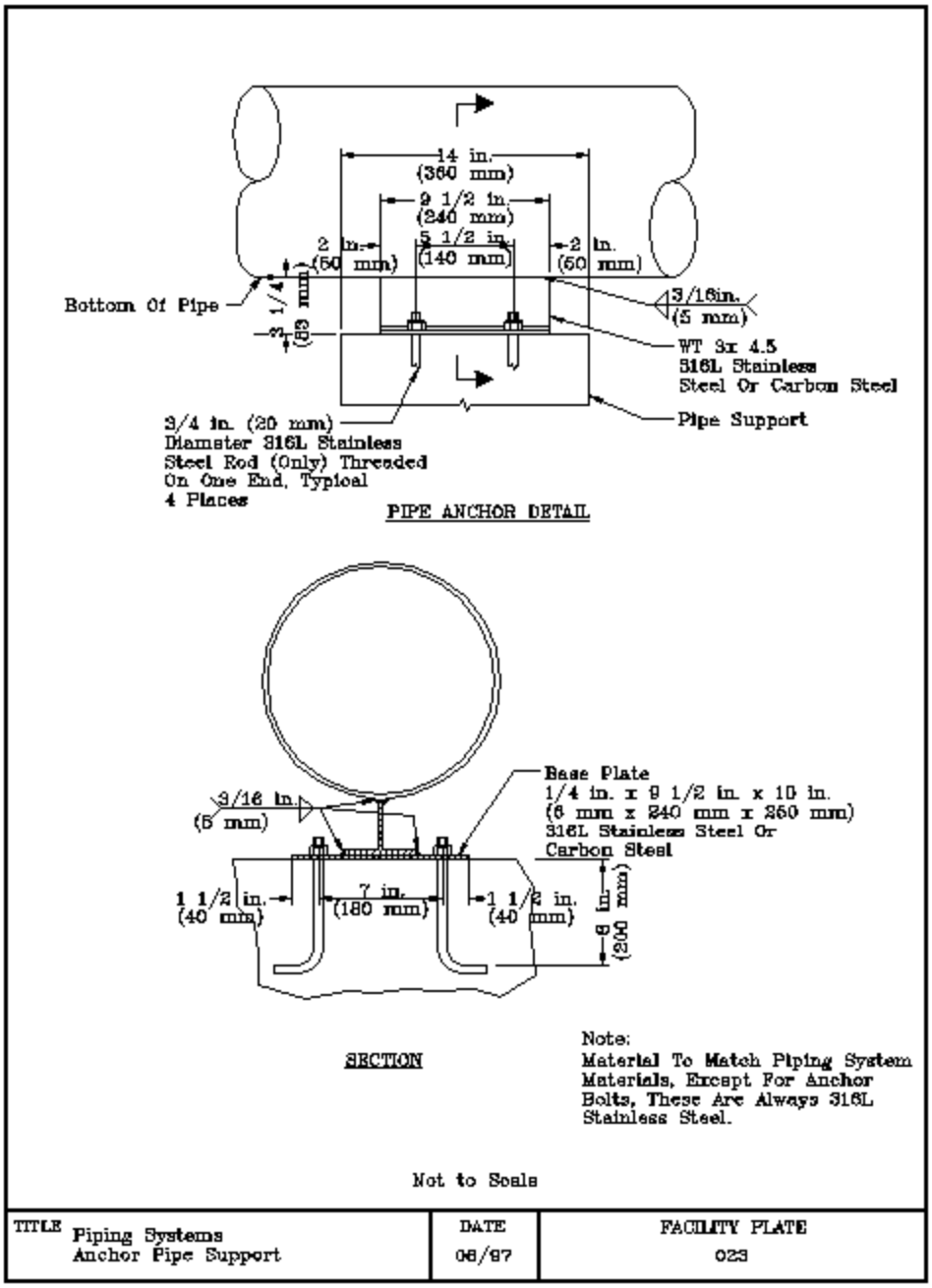
14 in.
(360 mm)
9 1/2 in.
(240 mm)
5 1/2 in.
(140 mm)
2 in.
(50 mm)
2 in.
(50 mm)
Bottom Of Pipe
1/4 in.
(6 mm)
3/16in.
(5 mm)
WT 3x 4.5
316L Stainless
Steel Or Carbon Steel
Pipe Support
3/4 in. (20 mm)
Diameter 316L Stainless
Steel Rod (Only) Threaded
On One End, Typical
4 Places
PIPE ANCHOR DETAIL
3/16 in.
(5 mm)
Base Plate
1/4 in. x 9 1/2 in. x 10 in.
(6 mm x 240 mm x 260 mm)
316L Stainless Steel Or
Carbon Steel
1 1/2 in.
(40 mm)
7 in.
(180 mm)
1 1/2 in.
(40 mm)
10 in.
(260 mm)
SECTION
Note:
Material To Match Piping System
Materials, Except For Anchor
Bolts, These Are Always 316L
Stainless Steel.
Not to Scale
TITLE Piping Systems
Anchor Pipe Support
DATE
08/97
FACILITY PLATE
023

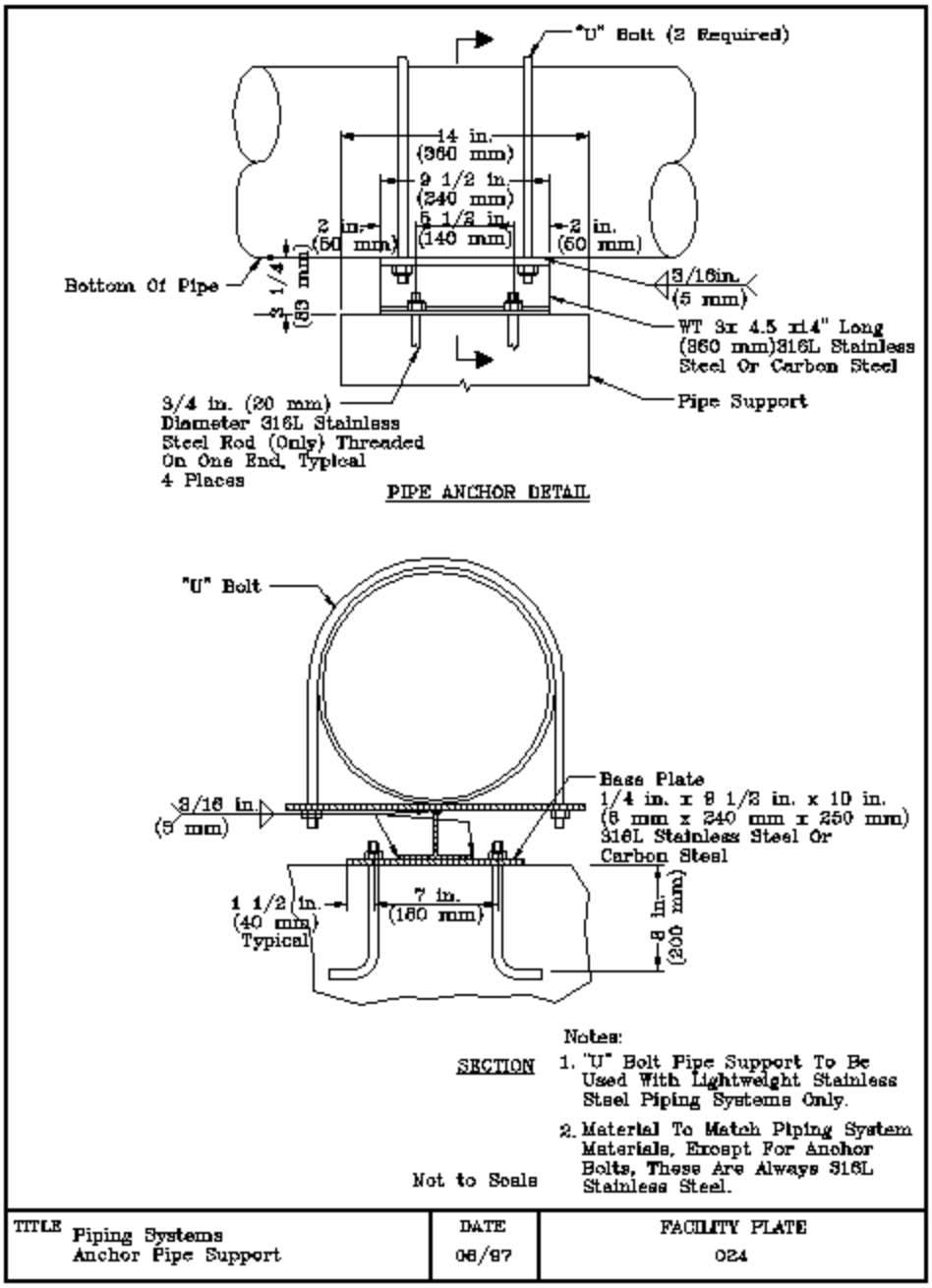
"U" Bolt (2 Required)
14 in.
(360 mm)
9 1/2 in.
(240 mm)
5 1/2 in.
(140 mm)
2 in.
(50 mm)
2 in.
(50 mm)
Bottom Of Pipe
1/4
(63 mm)
3/16in.
(5 mm)
WT 3x 4.5 x14" Long
(360 mm)316L Stainless
Steel Or Carbon Steel
Pipe Support
3/4 in. (20 mm)
Diameter 316L Stainless
Steel Rod (Only) Threaded
On One End, Typical
4 Places
PIPE ANCHOR DETAIL
"U" Bolt
Base Plate
1/4 in. x 9 1/2 in. x 10 in.
(6 mm x 240 mm x 250 mm)
316L Stainless Steel Or
Carbon Steel
3/16 in.
(5 mm)
1 1/2 in.
(40 min)
Typical
7 in.
(180 mm)
8 in.
(200 mm)
SECTION
Notes:
1. "U" Bolt Pipe Support To Be Used With Lightweight Stainless Steel Piping Systems Only.
2. Material To Match Piping System Materials, Exospt For Anchor Bolts, These Are Always 316L Stainless Steel.
Not to Scale
TITLE Piping Systems
Anchor Pipe Support
DATE
06/97
FACILITY PLATE
024

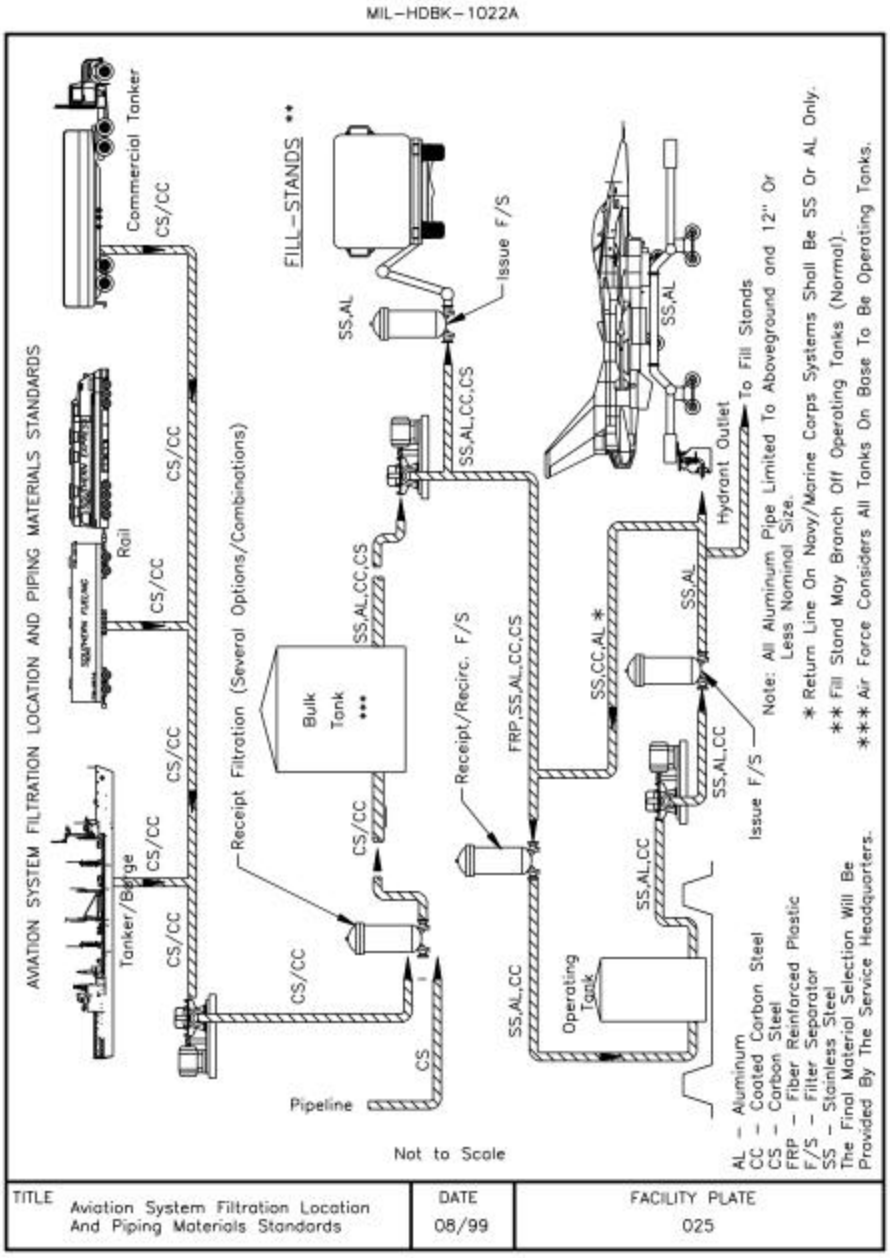
MIL-HDBK-1022A
AVIATION SYSTEM FILTRATION LOCATION AND PIPING MATERIALS STANDARDS
Commercial Tanker
Rail
Tanker/Barge
CS/CC
Receipt Filtration (Several Options/Combinations)
Bulk Tank ***
SS,AL,CC,CS
Receipt/Recirc. F/S
FILL-STANDS **
SS,AL
Issue F/S
SS,AL,CC,CS
FRP,SS,AL,CC,CS
SS,CC,AL *
SS,AL
Hydrant Outlet
To Fill Stands
SS,AL,CC
Issue F/S
Operating Tank
CS
Pipeline
Not to Scale
AL - Aluminum
CC - Coated Carbon Steel
CS - Carbon Steel
FRP - Fiber Reinforced Plastic
F/S - Filter Separator
SS - Stainless Steel
The Final Material Selection Will Be Provided By The Service Headquarters.
Note: All Aluminum Pipe Limited To Aboveground and 12" Or Less Nominal Size.
* Return Line On Navy/Marine Corps Systems Shall Be SS Or AL Only.
** Fill Stand May Branch Off Operating Tanks (Normal).
*** Air Force Considers All Tanks On Base To Be Operating Tanks.
TITLE
Aviation System Filtration Location And Piping Materials Standards
DATE
08/99
FACILITY PLATE
025

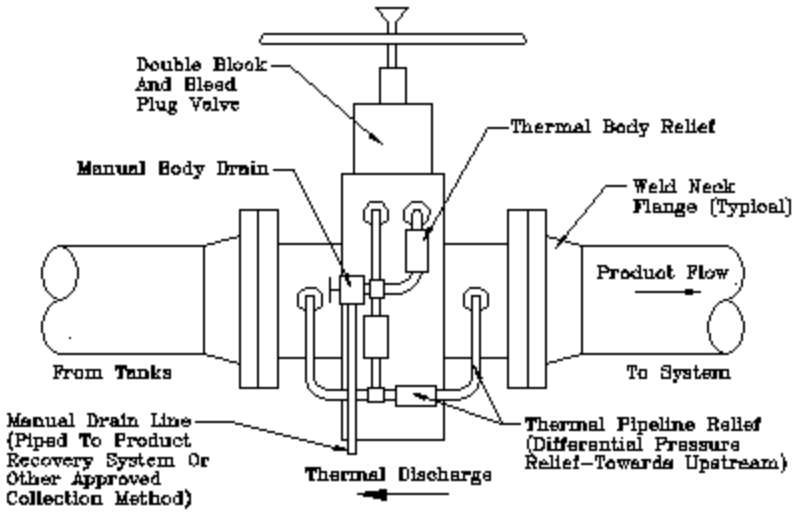

INTEGRAL VALVE THERMAL RELIEF PIPING SYSTEM

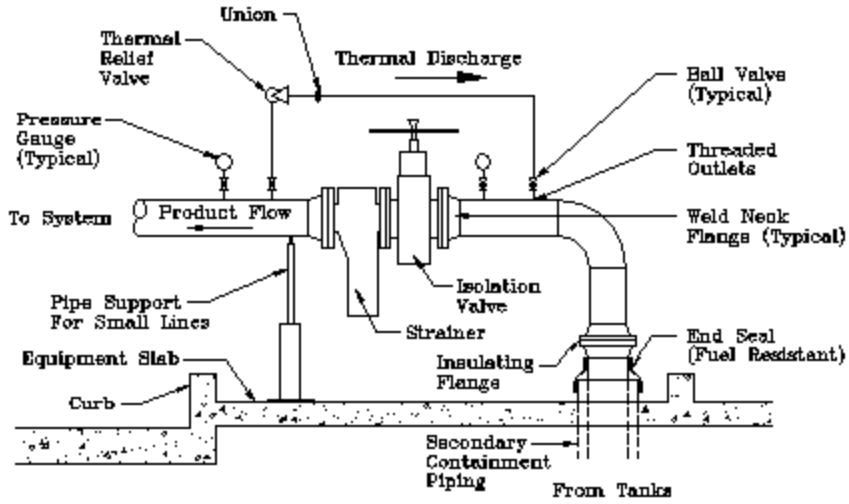

CONVENTIONAL THERMAL RELIEF PIPING SYSTEM

Not to Scale

TITLE	DATE	FACILITY PLATE
Thermal Relief Piping Systems Integral Valve And Conventional	06/97	026

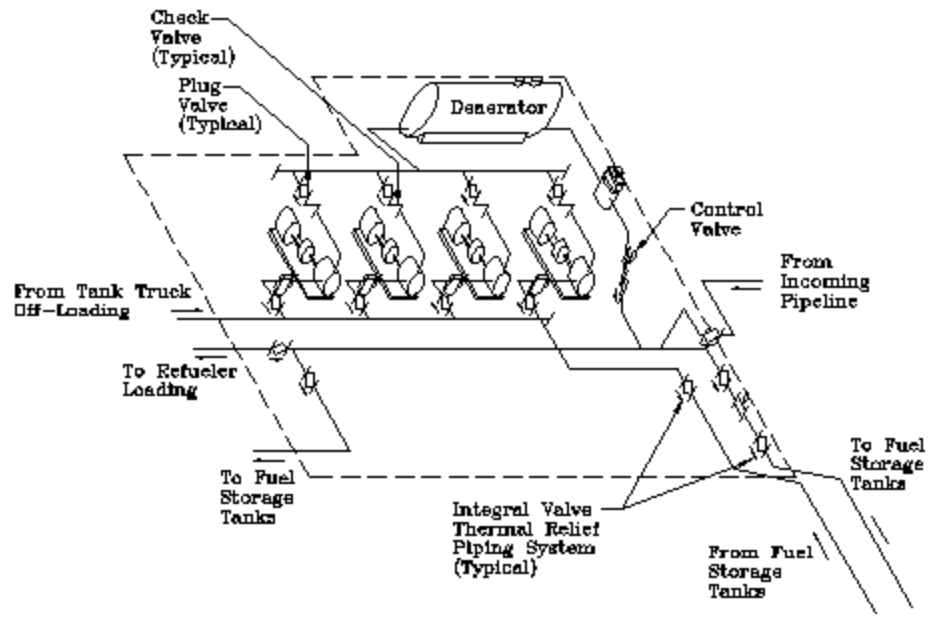

EQUIPMENT PUMPHOUSE OR PADS

Not to Scale

Denotes Thermal Relief Discharge Direction Of Flow

TITLE	DATE	FACILITY PLATE
Thermal Relief Piping Systems Equipment Pumphouse Or Pads	08/97	027

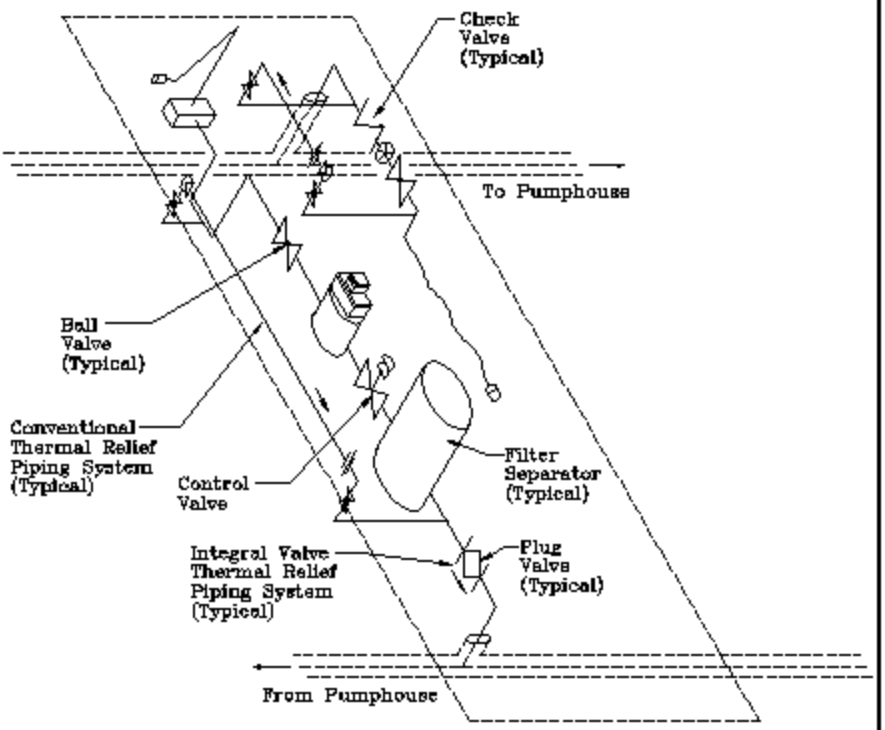

TANK TRUCK AND REFUELER EQUIPMENT RACKS

Denotes Thermal Relief Discharge Direction Of Flow

Not to Scale

TITLE	DATE	FACILITY PLATE
Thermal Relief Piping Systems Tank Truck And Refueler Racks	08/97	028

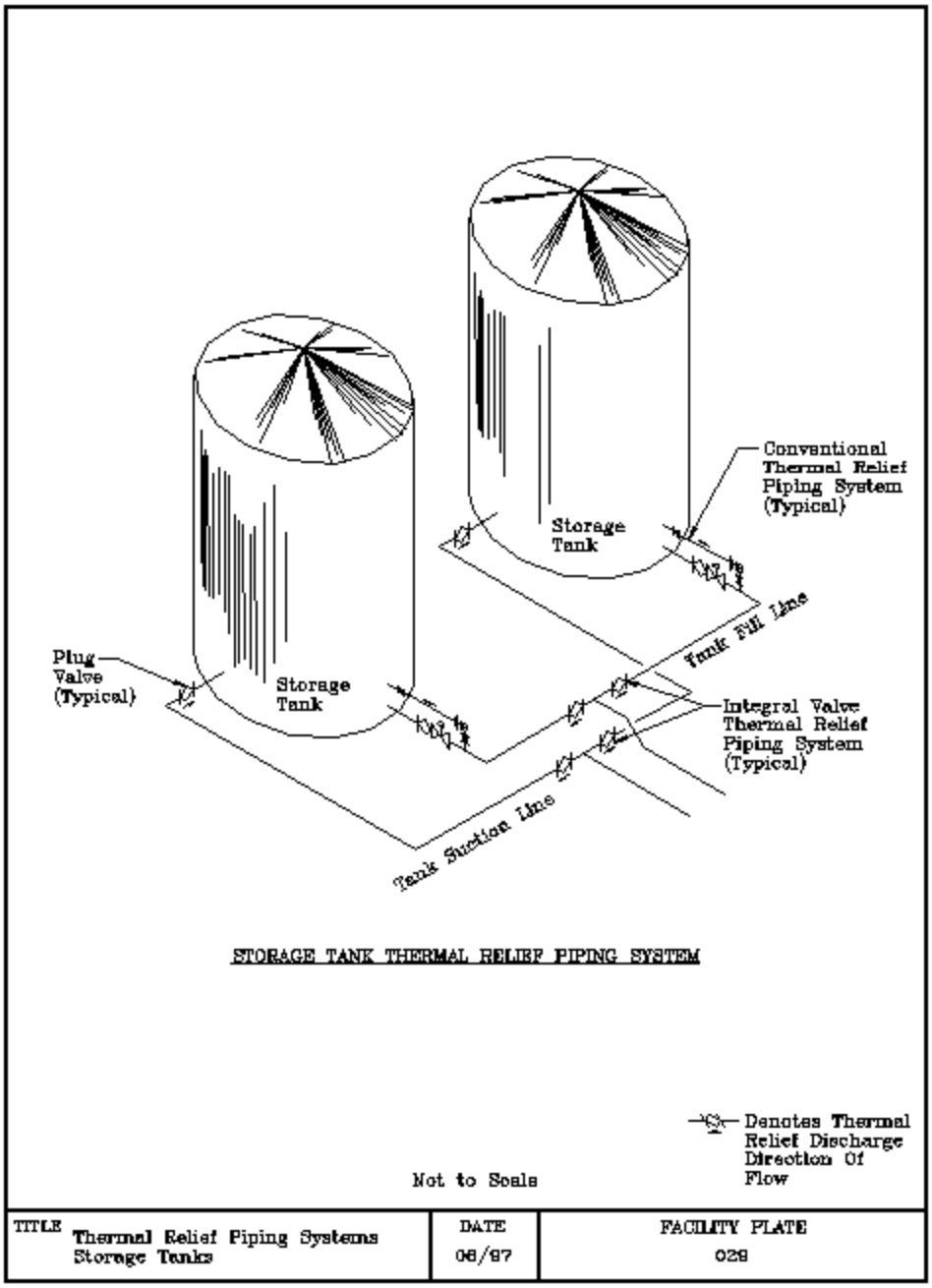
Conventional
Thermal Relief
Piping System
(Typical)
Storage
Tank
Tank Fill Line
Plug
Valve
(Typical)
Storage
Tank
Integral Valve
Thermal Relief
Piping System
(Typical)
Tank Suction Line
STORAGE TANK THERMAL RELIEF PIPING SYSTEM
Denotes Thermal
Relief Discharge
Direction Of
Flow
Not to Scale
TITLE
Thermal Relief Piping Systems
Storage Tanks
DATE
08/97
FACILITY PLATE
028

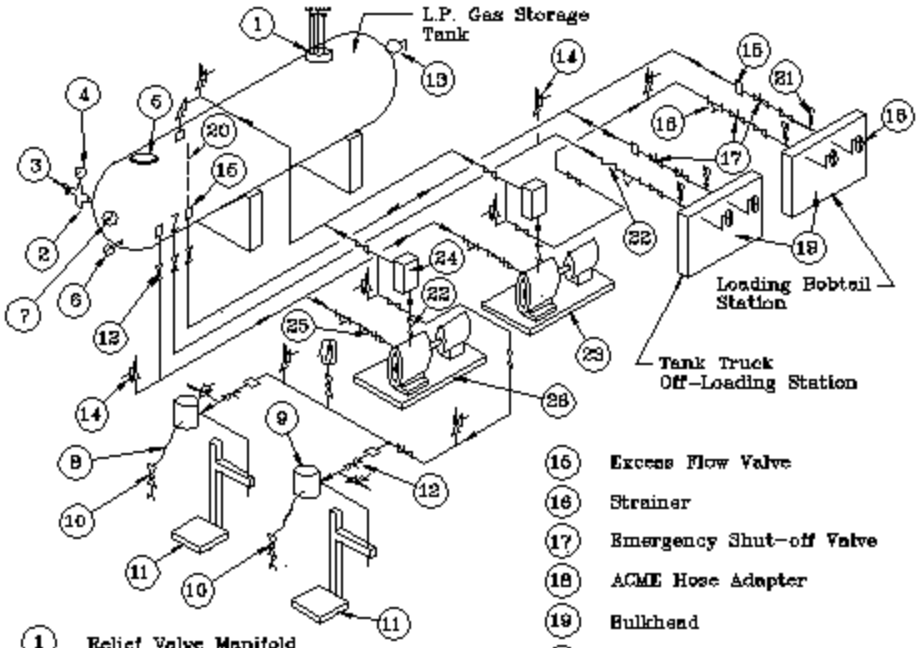

1. Relief Valve Manifold
2. 85% Maximum Fill Level Spit Gauge
3. Combination Valve
4. Pressure Gauge
5. Manhole
6. Thermometer
7. Magnetic Liquid Level Gauge
8. Hose
9. Automatic Cylinder Filling Valve
10. Quick Acting Valve
11. Cylinder Filling Scale
12. Shut-Off Valve
13. Roto Gauge
14. Relief Valve
15. Excess Flow Valve
16. Strainer
17. Emergency Shut-off Valve
18. ACME Hose Adapter
19. Bulkhead
20. Internal Riser Pipe
21. Vent Valve
22. Check Valve
23. Bobtail Fill Pump With Explosion Proof Motor
24. Differential Bypass Valve
25. Flexible Connector
26. Cylinder Filling Pump With Explosion Proof Motor

Notes:

1. Pipes To Be Anchored To Bulkhead.
2. Emergency Shut-off Valves Are To Locally And Remotely Operate And To Be Received With Thermal Actuator.
3. Bulkheads For Transport Off-Loading And Bobtail Fillings Are To Be Isolated From Each Other.

Not to Scale

TITLE	DATE	FACILITY PLATE
Liquefied Petroleum Gas Facilities Small Volume Facility For Trucks And Cylinders	08/97	030

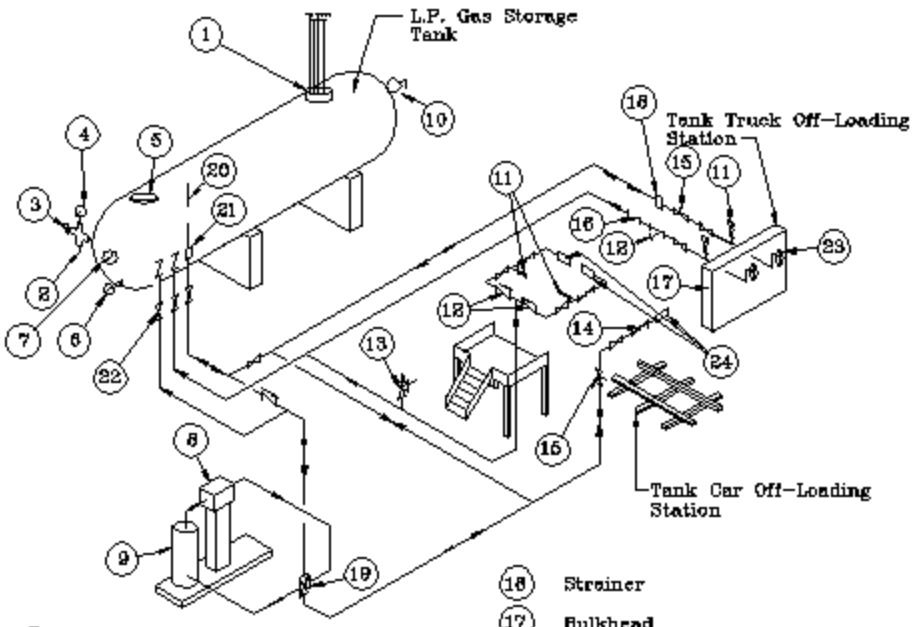

1. Relief Valve Manifold
2. 65% Maximum Fill Level Spit Gauge
3. Combination Valve
4. Pressure Gauge
5. Manhole
6. Thermometer
7. Magnetic Liquid Level Gauge
8. Vapor Compressor
9. Liquid Trap
10. Roto Gauge
11. Vent Valve
12. Check Valve
13. Relief Valve
14. Hose
15. Emergency Shut-Off Valve
16. Strainer
17. Bulkhead
18. Express Flow Valve
19. 4-Way Valve
20. Internal Riser Pipe
21. Excess Flow Valve
22. Shut-Off Valve
23. ACME Hose Adapter
24. Combination Railcar Adapter/Emergency Shut-Off Valve

Notes:

1. Pipes To Be Anchored To Bulkhead.
2. Emergency Shut-Off Valves Are To Locally And Remotely Operate And To Be Received With Thermal Actuator.

Not to Scale

TITLE	DATE	FACILITY PLATE
Liquefied Petroleum Gas Facilities Large Volume Facility For Tank Cars And Water Vessels	08/97	031

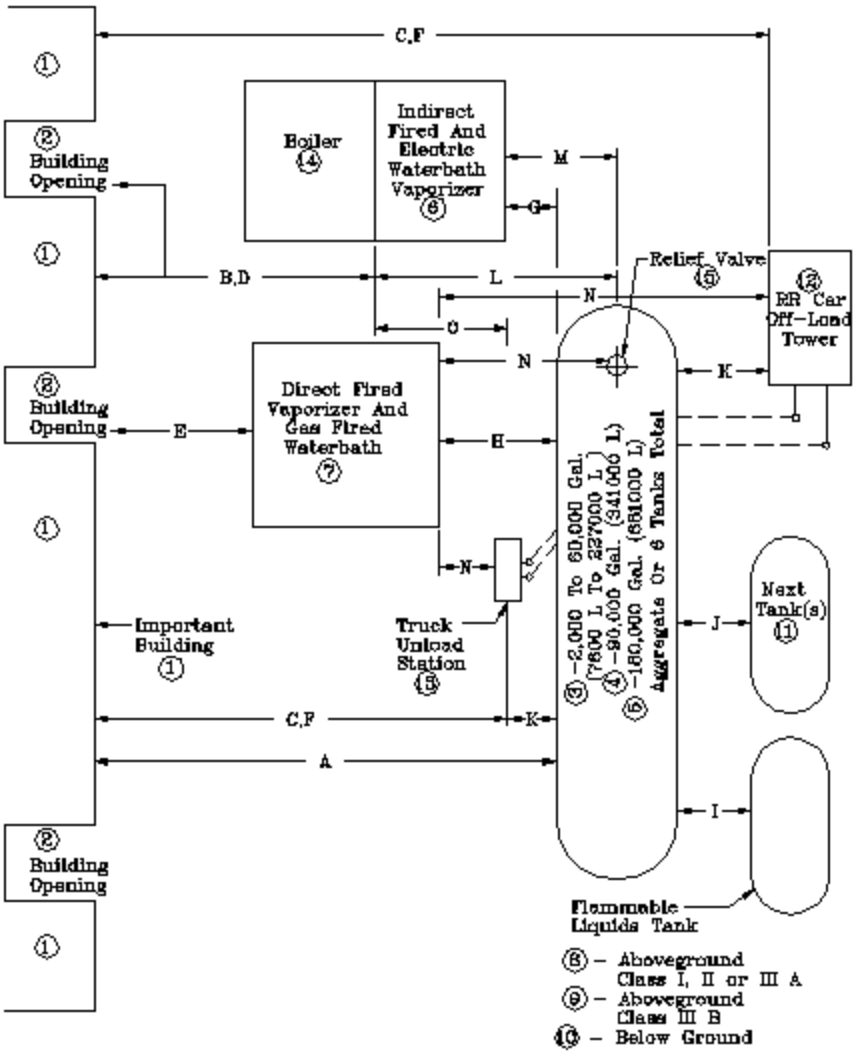

For Recommended Minimum Spacing Between LP-Gas Storage Tanks, Off-Loading Station, Flammable Liquid Storage Tanks, Vaporizer House, And Important Buildings See Facility Plate 033.

Not to Scale

TITLE	DATE	FACILITY PLATE
Liquefied Petroleum Gas Facilities Tank Spacing Requirements	06/97	032

Minimum Recommended Distance			
Dimension	Point To Point	Distance, Ft.	Distance, m
A	1 To 3[a]	75	23
	4[a]	150	46
	5[b]	200	60
	5[c]	350	105
B	6	20	6
C	12	200	60
	13	50	15
D	2 To 6	20	6
E	7	50	15
F	12	200	60
	13	75	23
G	3,4,5 To 6	5	1.5
H	7	15	4.5
I	8	100	30
	9	50	15
	10	20	6
J	11[d]	75	23
K	12	75	23
	13	50	15
L	14	75	23
M	6 To 15	50	15
N	7 To 12,13,15[e]	75	23
O	13 To 14	75	23

Notes:

a. For Single Tanks Only. Treat Multiple Tanks As No. 5.
b. For Buildings With Hydrant Protection.
c. For Buildings Without Hydrant Protection.
d. 5 ft. (1.5m) For Tanks Within A Group.
e. For Tanks Smaller Than 2,000 Gal. (7600 L), 25 Ft. (7.6m).

Not to Scale

TITLE	DATE	FACILITY PLATE
Liquefied Petroleum Gas Facilities Tank Spacing Requirements	06/97	033

REFERENCES

NOTE: THE FOLLOWING REFERENCED DOCUMENTS FORM A PART OF THIS HANDBOOK TO THE EXTENT SPECIFIED HEREIN. USERS OF THIS DOCUMENT SHOULD REFER TO THE LATEST REVISIONS OF CITED DOCUMENTS UNLESS OTHERWISE DIRECTED.

FEDERAL/MILITARY SPECIFICATIONS, STANDARDS, BULLETINS, HANDBOOKS, USAFE/NATO STANDARD DESIGNS, AND NAVFAC GUIDE SPECIFICATIONS:

Unless otherwise indicated, copies are available from the Standardization Document Order Desk, Building 4D, 700 Robbins Avenue, Philadelphia, PA 19111-5094. For account and order information, the phone number is (215) 697-2179/2667 or DSN 442-2179/2667. Military Handbooks are also available on CD-ROM from the National Institute of Building Sciences, 1201 L Street NW, Suite 400, Washington, D.C. 20005-4024, Phone Number: (202) 289-7800.

FEDERAL SPECIFICATIONS

BB-G-110	Butane, Propane, and Butane-Propane Mixtures
RR-C-910	Cylinders, Compressed Gas

MILITARY SPECIFICATIONS

MIL-F-16884	Fuel, Naval Distillate
MIL-DTL-85470	Fuel System Icing Inhibitor, High Flash Point
MIL-PRF-25017	Inhibitor, Corrosion, Fuel Soluble
MIL-PRF-17331	Lubricating Oil, Steam Turbine and Gear, Moderate Service
MIL-PRF-9000	Lubricating Oil, Shipboard Internal Combustion Engine, High Output Diesel
MIL-PRF-26536	Hydrazine

MIL-DTL-5624	Turbine Fuels, Aviation, Grades JP-4, JP-5, and JP-5/JP-8 ST
MIL-DTL-25524	Turbine Fuel, Aviation, Thermally Stable (JPTS)
MIL-DTL-38219	Turbine Fuel, Low Volatility, JP-7
MIL-DTL-83133	Turbine Fuels, Aviation, Kerosene Types, NATO F-34 (JP-8), and NATO F-35.

STANDARD DESIGNS

AW 78-24-27	Standard Fueling Systems; Aboveground Vertical Steel Tanks with Floating Pan and Fixed Roofs
AW 78-24-28	Pressurized Hydrant Fueling System, Type III
AW 78-24-29	Aircraft Direct Fueling System, Type IV and V

HANDBOOKS

MIL-HDBK-1002/1	Structural Engineering General Requirements
MIL-HDBK-1002/2	Loads
MIL-HDBK-1002/3	Steel Structures
MIL-HDBK-1004/1	Electrical Engineering; Preliminary Design Considerations
MIL-HDBK-1004/6	Lightning Protection
MIL-HDBK-1004/10	Electrical Engineering Cathodic Protection
MIL-HDBK-1005/8	Domestic Wastewater Control
MIL-HDBK-1005/9	Industrial and Oily Wastewater Control

MIL-HDBK-1005/17	Nondomestic Wastewater Control and Treatment Design
MIL-HDBK-1008	Fire Protection for Facilities Engineering, Design, and Construction
MIL-HDBK-1013/1	Design Guidelines for Physical Security of Facilities
MIL-HDBK-1013/10	Design Guidelines for Security Fencing, Gates, Barriers, and Guard Facilities
MIL-HDBK-1021/1	Airfield Geometric Design
MIL-HDBK-1021/2	General Concepts for Airfield Pavement Design
MIL-HDBK-1025/1	Piers and Wharves
MIL-HDBK-1025/2	Dockside Utilities for Ship Service
MIL-HDBK-1025/6	General Criteria for Waterfront Construction
MIL-HDBK-1027/1	Firefighting School Facilities
MIL-HDBK-1130	Inactivation, Caretaker Maintenance, Reactivation, and Closure of Shore Facilities

NAVFAC GUIDE SPECIFICATIONS

NFGS-09971	Exterior Coating for Welded Steel Petroleum Storage Tanks

STANDARDS

MIL-STD-161F	Identification Methods for Petroleum Products Systems Including Hydrocarbon Missile Fuels
MIL-STD-461D	Requirements for the Control of Electromagnetic Interference Emissions and Susceptibility

AIR FORCE HANDBOOKS

AFH 32-1084	Standard Facility Requirements Handbook

AIR FORCE MANUALS (AFM)

AFMAN 32-1013	Airfield and Heliport Planning Design Manual
AFMAN 32-1080	Electric Power Supply and Distribution
AFMAN 85-16	Maintenance of Petroleum Systems
AFMAN 88-3, Chapter 13	Seismic Design for Buildings
AFMAN 88-7, Chapter 5	General Provisions and Geometric Design for Roads, Streets, Walks, and Open Storage Areas
AFMAN 88-9	Electrical Design
AFMAN 91-201	Explosives Safety Standards

OCCUPATIONAL SAFETY AND HEALTH

AFOSH 91-38	Hydrocarbon Fuels General

INSTRUCTIONS

AFI 32-1054	Corrosion Control

NATO STANDARD

	Airfield Standard Design - Jet Fuel Storage and Dispensing Systems

U.S. ARMY CORPS OF ENGINEERS

Unless otherwise indicated, copies are available from the U.S. Army Corps of Engineers, Washington, D.C. 20314-1000. Technical manuals are also available on CD-ROM from the

National Institute of Building Sciences, 1201 L Street NW, Suite 400, Washington, D.C. 20005-4024, Phone Number: (202) 289-7800.

TECHNICAL MANUALS

Corps TI 809-04 Seismic Design for Buildings

Corps TM 5-803-7 Airfield and Heliport Planning Design Manual

Corps TM 5-809-2 Structural Design Criteria for Buildings

Corps TM 5-809-3 Masonry Structural Design for Buildings

Corps TM 5-809-6 Structural Design Criteria for Structures Other than Buildings

Corps TM 5-809-10 Seismic Design for Buildings

Corps TM 5-809-10-1 Seismic Design Guidelines for Essential Buildings

Corps TM 5-809-10-2 Seismic Design Guidelines for Upgrading Existing Buildings

Corps TM 5-811-1 Electric Power Supply and Distribution

Corps TM 5-811-3 Electrical Design, Lighting, and Static Electricity Protection

Corps TM 5-811-7 Electrical Design, Cathodic Protection

Corps TM 5-811-9 Voice/Data Telephone Systems

Corps TM 5-814-3 Domestic Wastewater Treatment

Corps TM 5-822-5 General Provisions and Geometric Design for Roads, Streets, Walks, and Open Storage Areas

Corps TM 5-852-1 Arctic and Subarctic Construction-General Provisions

Corps TM 5-852-2	Arctic and Subarctic Construction - Site Selection and Development
Corps TM 5-852-3	Arctic and Subarctic Construction - Runway and Road Design
Corps TM 5-852-4	Arctic and Subarctic Construction - Foundations for Structures
Corps TM 5-852-5	Arctic and Subarctic Construction - Utilities
Corps TM 5-852-6	Arctic and Subarctic Construction - Calculation Methods for Determination of Depths of Freeze and Thaw in Soils
Corps TM 5-852-7	Surface Drainage Design for Air Fields and Heliports in Arctic and Subarctic Regions
Corps TM 5-852-9	Arctic and Subarctic Construction - Buildings
Corps TM 5-853-3	Security Engineering
TO 42B1-1-18 (S-1)	Quality Control of Fuels and Lubricants
TO 00-25-172	Ground Servicing of Aircraft and Static Grounding/Bonding

DESIGN CRITERIA

--	Architectural and Engineering Instructions (AEI)

MANUAL

EM 1110-3-178	Removal of Underground Storage Tanks

TECHNICAL LETTER

ETL 1110-3-466	Selection and Design of Oil/Water Separators at Army Facilities

ENGINEERING INSTRUCTION

EI 015010	Load Assumptions for Buildings

NAVFAC

DEFINITIVE DRAWINGS

Nos. 1403985 and 1403986	Aircraft Direct Fueling System
No. 1403989	Tank Car Loading Facility
Nos. 1403995 thru 1403999	Non-Polluting Fuel Piers

INSTRUCTIONS

OPNAVINST 5090.1	Environmental and Natural Resources Program Manual

LETTERS

NAVFAC Letter 11012 04C/cmm dtd 5/31/94	Cathodic Protection Systems, Interim Technical Guidance

NAVY DESIGN MANUALS, P-PUBLICATIONS, AND MAINTENANCE AND OPERATION MANUALS:

Available from National Technical Information Service (NTIS), 5285 Port Royal Road, Springfield, VA 22161, Attention: Defense Publications.

DESIGN MANUALS

DM-2.04	Concrete Structures
NAVAIR 00-80T-109	Aircraft Refueling NATOPS Manual
NAVSEA 56340-AA-MMA-010	Technical Manual for OTTO Fuel II Safety, Storage, and Handling Instructions

NAVFAC P-PUBLICATIONS

P-80	Facility Planning Criteria for Navy and Marine Corps Shore Installations
P-272	Oil/Water Separator Oil Contaminated Water Treatment

MAINTENANCE AND OPERATION MANUALS

MO-230	Maintenance and Operation of Petroleum Fuel Facilities

GENERAL SERVICES ADMINISTRATION

COMMERCIAL ITEM DESCRIPTION

CID A-A-52557	Fuel Oil, Diesel for Posts, Camps and Stations

(Unless otherwise indicated, copies are available from GSA, 100 Penn Square East, Room 610, Philadelphia, Pennsylvania 19107.)

OTHER GOVERNMENT DOCUMENTS AND PUBLICATIONS:

CODE OF FEDERAL REGULATIONS (CFR)

29 CFR Part 1910	Occupational Safety and Health Standards
33 CFR Part 154	Facilities Transferring Oil or Hazardous Material in Bulk
40 CFR Part 60	Standards of Performance for New Stationary Sources
40 CFR Part 112	Oil Pollution Prevention
40 CFR Part 122	EPA Administered Permit Programs: National Pollutant Discharge Elimination System (NPDES)

40 CFR Part 280	Technical Standards and Corrective Action Requirements for Owners and Operators of Underground Storage Tanks (UST)
40 CFR Part 281	Approval of State Underground Storage Tank Programs
49 CFR Part 195	Transportation of Hazardous Liquids by Pipeline

(Unless otherwise indicated, copies are available from the Superintendent of Documents, U.S. Government Printing Office (GPO), Washington, D.C. 20402.)

UNITED STATES CODE

42 USC 4231	National Environmental Policy Act (NEPA)

NON-GOVERNMENT PUBLICATIONS:

AMERICAN CONFERENCE OF GOVERNMENTAL INDUSTRIAL HYGIENISTS (ACGIH)

--	Design of Industrial Ventilation Systems

(Unless otherwise indicated, copies are available from American Conference of Governmental Industrial Hygienists (ACGIH), 1330 Kemper Meadow Drive, Cincinnati, OH 45240.)

AMERICAN NATIONAL STANDARDS INSTITUTE (ANSI)/AMERICAN SOCIETY OF MECHANICAL ENGINEERS (ASME)/INSTITUTE OF ELECTRICAL AND ELECTRONICS ENGINEERS (IEEE)

ASME	Code for Unfired Pressure Vessels
ANSI/ASME B31.3	Process Piping
ANSI/ASME B31.4	Liquid Transportation Systems for Hydrocarbons, Liquid Petroleum Gas, Anhydrous Ammonia, and Alcohols
ANSI/IEEE 142-91	Grounding of Industrial and Commercial Power Systems

IEEE 1100	Powering and Grounding Sensitive Electronic Equipment
ANSI C2	National Electrical Safety Code
ANSI Z358.1-1990	Emergency Eyewash and Shower Equipment

(Unless otherwise indicated, copies are available from the American National Standards Institute (ANSI), 11 West 42nd Street, New York, NY 10036; American Society of Mechanical Engineers (ASME), 22 Law Drive, Fairfield, NJ 07007-2900; and Electrical and Electronics Engineers (IEEE), Inc., IEEE Standards, 445 Hoes Street, Piscataway, NJ 08855-1331).

AMERICAN PETROLEUM INSTITUTE (API)

API 570	Piping Inspection Code: Inspection, Repair, Alteration, and Rerating of In-Service Piping Systems
Bull 1529	Aviation Fueling Hose
Bull D16	Suggested Procedure for Development of Spill Prevention Control and Countermeasure Plans
MPMS 2	Tank Calibration
MPMS 3	Tank Gauging
MPMS 5	Metering
Publ 1581	Specifications and Qualification Procedures for Aviation Jet Fuel Filter/Separators
Publ 2202	Dismantling and Disposing of Steel from Aboveground Leaded Gasoline Storage Tanks
RP 500	Classification of Locations for Electrical Installations at Petroleum Facilities
RP 540	Electrical Installations in Petroleum Processing Plants

RP 651	Cathodic Protection of Aboveground Petroleum Storage Tanks
RP 1004	Bottom Loading and Vapor Recovery for MC-306 Tank Motor Vehicles
RP 1102	Steel Pipelines Crossing Railroads and Highways
RP 1110	Pressure Testing of Liquid Petroleum Pipelines
RP 1604	Removal and Disposal of Used Underground Storage Tanks
RP 1615	Installation of Underground Petroleum Storage Systems
RP 2003	Protection Against Ignitions Arising Out of Static, Lightning, and Stray Currents
RP 2350	Overfill Protection for Petroleum Storage Tanks
Spec 6D	Pipeline Valves (Gate, Plug, Ball, and Check Valves)
Std 607	Fire Test for Soft-Seated Quarter-Turn Valves
Std 608	Metal Ball Valves - Flanged and Butt-Welding Ends
Std 610	Centrifugal Pumps for Petroleum, Heavy Duty Chemical, and Gas Industry Services
Std 650	Welded Steel Tanks for Oil Storage
Std 653	Tank Inspection, Repair, Alteration, and Reconstruction

Std 2000	Venting Atmospheric and Low-Pressure Storage Tanks: Nonrefrigerated and Refrigerated
Std 2015	Safe Entry and Cleaning of Petroleum Storage Tanks
Std 2510	Design and Construction of Liquefied Petroleum Gas (LPG) Installations
Std 2610	Design, Construction, Operation, Maintenance, and Inspection of Terminal and Tank Facilities

Manual on Disposal of Refinery Wastes:

Chpt 3	Collection and Treatment
Chpt 5	Oil Water Separator and Process Design

(Unless otherwise indicated, copies are available from the American Petroleum Institute (API) Headquarters, 1220 L Street NW, Washington, DC 20005.)

AMERICAN SOCIETY FOR TESTING AND MATERIALS (ASTM)

ASTM D1655	Aviation Turbine Fuels (DOD Adopted)
ASTM D3699	Kerosine
ASTM D4814	Automotive Spark-Ignition Engine Fuel
ASTM F758	Smooth-Wall Poly (Vinyl Chloride) (PVC) Plastic Underdrain Systems for Highway, Airport, and Similar Drainage (DOD Adopted)

(Unless otherwise indicated, copies are available from the American Society for Testing and Materials (ASTM), 100 Barr Harbor Drive, West Conshohocken, PA 19428-2959.)

ASSOCIATION OF AMERICAN RAILROADS

Circular Nos. 17D and 17E	Recommended Practice for the Elimination of Electric Sparks

(Unless otherwise indicated, copies are available from the Association of American Railroads, Publications, Central Operations, 50 F Street NW, Washington, D.C. 20001.)

BUILDING OFFICIALS AND CODE ADMINISTRATORS INTERNATIONAL, INC. (BOCA)

BOCA F2315	National Fire Prevention Code

(Unless otherwise indicated, copies are available from the Building Officials and Code Administrators, 4051 W. Flossmoor Road, Country Club Hills, Illinois 60478.)

COORDINATING RESEARCH COUNCIL, INC. (CRC)

Report No. 530	Handbook of Aviation Fuel Properties
Report No. 346 and No. 355	Electrostatic Discharges in Aircraft Fuel Systems

(Unless otherwise indicated, copies are available from the Coordinating Research Council, Inc., 219 Perimeter Center Parkway, Suite 400, Atlanta, GA 30346.)

FACTORY MUTUAL ENGINEERING CORP. (FM)

Section 7-55,12-28	Loss Prevention Data, Liquid Petroleum Gas

HYDRAULIC INSTITUTE

--	Individual Standards for Centrifugal, Vertical, Rotary, and Reciprocating Pumps, as well as General Guidelines for Pumps

(Unless otherwise indicated, copies are available from the Hydraulic Institute, 9 Sylvan Way, Parsippany, New Jersey 07054-3802.)

INSTITUTE OF GAS TECHNOLOGY

--	Cascade-Natural Gas Vehicle Compressor/Storage Refueling Station Demonstration Program

(Unless otherwise indicated copies are available from the Institute of Gas Technology, 4201 West 36th Street, Chicago, Illinois 60632.)

INTERNATIONAL CONFERENCE OF BUILDING OFFICIALS (ICBO)

UBC 902	Uniform Building Code
UFC	Uniform Fire Code
UFC Article 52	Motor Vehicle Fuel Dispensing Stations
UFC Article 79	Flammable and Combustible Liquids

(Unless otherwise indicated, copies are available from the ICBO, 5360 South Workman Mill Road, Whittier, California 90601.)

NATIONAL ASSOCIATION OF CORROSION ENGINEERS (NACE) INTERNATIONAL

--	Control of Pipeline Corrosion

(Unless otherwise indicated, copies are available from the National Association of Corrosion Engineers (NACE) International, P. O. Box 218340, Houston, TX 77218-8340.)

NATIONAL FIRE PROTECTION ASSOCIATION (NFPA)

NFPA 11	Low-Expansion Foam/Combined Agent Systems
NFPA 20	Installation of Centrifugal Fire Pumps
NFPA 30	Flammable and Combustible Liquids Code
NFPA 30A	Automotive and Marine Service Station Code

NFPA 31	Installation of Oil-Burning Equipment
NFPA 37	Installation and Use of Stationary Combustion Engines and Gas Turbines
NFPA 45	Fire Protection for Laboratories Using Chemicals
NFPA 52	Compressed Natural Gas (CNG) Vehicular Fuel Systems
NFPA 54	National Fuel Gas Code
NFPA 55	Use and Handling of Compressed and Liquefied Gases in Portable Cylinders
NFPA 58	Storage and Handling of Liquefied Petroleum Gases
NFPA 59	Storage and Handling of Liquefied Petroleum Gases at Utility Gas Plants
NFPA 70	National Electrical Code
NFPA 77	Static Electricity
NFPA 110	Emergency and Standby Power Systems
NFPA 307	Construction and Fire Protection of Marine Terminals, Piers, and Wharves
NFPA 407	Aircraft Fuel Servicing
NFPA 415	Aircraft Fueling Ramp Drainage
NFPA 780	Installation of Lightning Protection Systems

(Unless otherwise indicated, copies are available from the National Fire Protection Association (NFPA), 1 Batterymarch Park, Quincy, MA 02269-9101.)

UNDERWRITERS LABORATORIES, INC. (UL)

UL 58	Safety Steel Underground Tanks for Flammable and Combustible Liquids
UL 142	Safety Steel Aboveground Tanks for Flammable and Combustible Liquids
UL 1746	Safety External Corrosion Protection Systems for Steel Underground Tanks
UL 2085	Safety Insulated Aboveground Tanks for Flammable and Combustible Liquids

(Unless otherwise indicated, copies are available from the Underwriters Laboratories, Inc. (UL), 333 Pfingsten Road, Northbrook, IL 60062-2096.)

GLOSSARY

ACGIH. American Conference of Governmental Industrial Hygienists.

Additive. Chemical added in minor proportions to fuels or lubricants to create, enhance or inhibit selected properties; example, fuel system icing inhibitor (FSII).

AEI. Architectural and Engineering Instruction.

AFFF. Aqueous film-forming foam.

AFSS. Automated fuel service station.

AIS. Automated Information System.

Ambient. Encompassing on all sides, as temperature.

Anode. The positively charged electrode of an electrolytic cell.

ANSI. American National Standards Institute.

API. American Petroleum Institute.

API Gravity. Petroleum industry scale for measuring the density of oils.

Aromatic Hydrocarbons. Hydrocarbons characterized by the presence of the hexagonal benzene ring; also having an aroma.

ASCII. American Standard Code for Information Interchange.

ASME. American Society of Mechanical Engineers.

ASTM. American Society for Testing and Materials.

ATG. Automatic tank gauging.

Atmospheric Pressure. The pressure exerted by the earth's atmosphere, when measured at sea level under standard conditions is equal to 14.7 pounds per square inch (101 kPa).

Atmospheric Tank. Storage tank which operates at or near atmospheric pressure (14.7 psi (101 kPa) at sea level).

Auto-ignition Temperature. The temperature at which a substance will ignite without the further addition of energy from an outside source.

Ballast Water. Water carried in ship's fuel tanks or cargo tanks to improve the vessel's stability when empty of petroleum.

Barrel. Measure of volume as used in the petroleum industry, equivalent of 42 U.S. gallons (0.16 m^3).

Blind Flange. Piping flange with no passage through the center.

Block Valve. Valve which provides absolute closure such as a ball valve or plug valve. (Also, refer to Electric Block Valve.)

BOCA. Building Officials and Code Administrators International, Inc.

Boiler Fuel Oil. Fuel oil that is burned in furnaces to create steam or hot water, also called burner fuel oil.

Boiling Point. The temperature at which the vapor pressure of a liquid is equal to the pressure of the vapor above the liquid, usually atmospheric pressure. The temperature increases as the atmospheric pressure increases.

Bollard. A heavy solid post used to protect equipment from an impact. Also used on docks and ships for mooring.

Bond. Electrical connection between two objects which equalizes their potential.

Boom. Flexible floating barrier consisting of linked segments designed to contain free oil on the surface of a body of water.

Booster Pump. Pump installed along the run of a long pipeline for the purpose of increasing pressure.

Bottom Loading. Method of filling tank trucks or tank cars through a tight connection at the bottom.

Breakaway Coupling. Coupling designed to part easily with a moderate pull with a dry-break from both directions.

Breathing. The movement of vapors into or out of a container because of natural cyclical heating and cooling.
BS&W. Common abbreviation for bottom sediment and water as found in the bottom of fuel tanks, also; a type of sampling procedure.

Btu. British thermal unit.

Bulk Storage Tank. Storage tank for fuel normally received by pipeline, tank truck, or tank car.

Bunkers. Common expression referring to heavy residual boiler fuel.

Calibration. Adjustment of the scale of a graduated device to meet an established standard, especially applicable to the adjustment of meter registers to indicate true volume as determined by a standard measure.

Catalyst. A substance that provokes or accelerates chemical reactions without itself being altered.

Cathodic Protection. A method for preventing the corrosion of metals by electrolysis.

Centistokes. A centistoke (cSt) is equal to 1 millimeter squared per second.

Centrifugal Pump. A rotating device which moves liquids and develops liquid pressure by imparting centrifugal force.

Centrifugal Separator. A rotating device which separates liquids of different density by centrifugal force, a form of centrifuge.

CFR. Code of Federal Regulations.

CI. Corrosion inhibitor.

Clarifier. Commonly used name for a micronic filter.

Clean Product. Refined light petroleum products such as gasoline or distillates, as differentiated from residuals or black oils.

Clear and Bright. Description of uncontaminated fuel indicating a complete absence of haze, free water or particulate matter.

Cloud Point. The temperature at which a fuel develops a cloudy or hazy appearance due to the precipitation of wax or moisture. The condition developed is called temperature haze.

CNG. Compressed Natural Gas.
CO_2. Chemical notation for carbon dioxide; fire extinguishing agent.

Coalescer. A filter designed to cause very small drops of water to form larger drops (coalesce) which will separate from fuel by gravity.

Combustible Liquid. Any liquid having a flash point at or above 100 °F (38 °C).

Combustible Vapor Indicator. Device which measures the quantity of combustible vapor in the atmosphere; explosion meter.

Contaminated Fuel. Petroleum fuel containing suspended or emulsified water, cleaning chemicals; or other foreign matter such as iron scale, dust, or other solid particles; or containing an unacceptable percentage of noncompatible fuel or other liquids; or containing more than one, or all of these classes of contaminants.

Contamination. The accidental addition to a petroleum fuel of some foreign material (contaminant) such as dirt, rust, water, or accidental mixing with another grade of petroleum.

CONUS. Continental United States.

Copper-copper Sulphate Electrode. Reference electrode used to measure structure-to-soil potentials for corrosion control; a half cell.

Corrosion. The process of dissolving, especially of metals due to exposure to electrolytes.

COTS. Commercial-off-the-shelf.

Crude Oil. Petroleum in its natural state prior to refining.

Cut and Cover. Refers to underground vertical storage tanks.

Dead-man Control. A control device, such as a switch or valve, designed to interrupt flow if the operator leaves his station.

Defueler. Tank vehicle used to remove fuel from aircraft.

Density. The mass per unit volume of a substance.

DFM. Diesel fuel marine.

DFSC. Defense Fuel Supply Center.
DIEGME. Diethylene glycol monomethyl ether.

Dike. An embankment or wall, usually of earth or concrete, surrounding a storage tank to impound the contents in case of a spill.

Direct Fueling System. Method used to refuel aircraft. Also known as hydrant system.

Dissolved Water. Water which is in solution with fuel as opposed to free water in suspension.

Distillate. Common term for any of a number of fuels obtained directly from distillation of crude petroleum, usually includes kerosene, JP-5, light diesel, and light burner fuels.

DLA. Defense Logistics Agency.

DOD. Department of Defense.

DOT. Department of Transportation.

Downgrade. To use a fuel for a lesser purpose than originally specified, often because of contamination.

Effluent. Stream flowing; discharge.

EFSO. Emergency fuel shut-off.

Electrode. Electric conductor through which an electric current enters or leaves an electrolyte.

Electrolysis. Chemical change, especially decomposition, produced in an electrolyte by an electric current.

Electrolyte. A substance capable of forming solutions with other substances which produce ions and thereby permit the flow of electric currents.

Electrical Block Valve. A diaphragm control valve which is operated by an electric solenoid valve on the trim.

Electrical Conductor. A substance which permits the flow of electric currents without permanent physical or chemical change; copper, aluminum.

EMAT. Electromagnetic acoustic transducer.

Emulsion. A suspension of small globules of one liquid in a second liquid with which the first will not mix.

EPDM. Ethylene-propylene terpolymer.

Epoxy Coating. A coating of thermosetting resins having strong adhesion to the parent structure, toughness, and high corrosion and chemical resistance, also used as an adhesive.

EPU. Emergency power unit.

Explosive Limits - (Upper and Lower). Limits of percentage composition of mixtures of combustible vapors and air which are capable of producing an explosion or combustion when ignited; also flammable limit.

Explosion-proof. Classification of electrical enclosures for use in hazardous areas designed to prevent the passage of internal arcs, sparks or flames.

FAS. Fuel Automated System.

Fender. Part of a pier structure designed to absorb the impact of a moving vessel.

Fiberglass. Composite material consisting of glass fibers in a matrix of resin such as epoxy.

Filter. A porous substance through which a liquid is passed to remove unwanted particles of solid matter.

Filter/separator. A filter or combination of filters designed to remove particulate matter and also coalesce entrained water.

Flammable Liquid. Any liquid having a flash point below 100 degrees F (38 degrees C) and a vapor pressure not exceeding 40 psia (275 kPa) at 100 degrees F (38 degrees C).

Flash Point. The temperature at which a combustible or flammable liquid produces enough vapor to support combustion.

Floating Roof Tank. Petroleum storage tank with a roof that floats on the liquid surface and rises and falls with the liquid level.

Flocculation. A treatment process in which waste waters are clarified by the addition of chemical coagulants to produce finely divided precipitates which will agglomerate into larger particles.

Free Water. Undissolved water content in fuel.

Freeze Point. The temperature at which wax crystals form in distillate fuels and aviation turbine fuels.

FRP. Fiberglass reinforced plastic.

FSII. Fuel system icing inhibitor.

Fuel Oil. See Boiler Fuel Oil.

Fuel Quality Monitor. A special type of filter designed to interrupt the flow of fuel when dirt or water content becomes too great.

Galvanizing. Rust resistant zinc coating applied to iron and steel.

Ground. An electrical connection to earth.

Haypack Filter. A filter which uses hay, straw, or excelsior as a filtering medium.

Hazardous Area. Electrical classification for areas where flammable or combustible liquids or vapors may be present.

HDPE. High-density polyethylene.

Hot Refueling. Refueling of aircraft which have one or more engines running.

HTH. Calcium hypochlorite.

Hydrant System. Distribution and dispensing system for aviation turbine fuels consisting of a series of fixed flush type outlets or hydrants connected by piping.

Hydrocarbon. A compound made up exclusively of hydrogen and carbon in various ratios and molecular arrangements.

Hydrostatic Head. Pressure caused by a column of liquid.

Hydrostatic Test. A test for leaks in a piping system using liquid under pressure as the test medium.

ICBO. International Conference of Building Officials.

Ignition Temperature. The minimum temperature required to initiate or cause self-sustained combustion independent of any heating or heated element.

Impervious. Not easily penetrated. The property of a material that does not allow, or allows only with great difficulty, the movement or passage of a fluid. Also referred to as impermeable.

Impressed Current System. A cathodic protection system using an outside source of electric power.

Inert Material. Any solid, liquid, or gaseous substance not combustible or fire-producing when exposed to the atmosphere under ordinary climatic conditions; it includes common metals, packing materials, ceramic materials, construction materials such as concrete, mineral aggregates, and masonry.

Installation Pipelines. Pipelines which connect POL facilities within an installation such as a barge pier to a bulk facility and a bulk facility to an operating (ready-issue) tank. These pipelines do not cross property lines and, therefore, do not leave the government facility and control.

Interterminal Pipelines. Pipelines which connect two government installations such as a Defense Fuel Supply Center depot to a military installation. These pipelines cross property lines and cross public and/or private properties, streets, highways, railroads, and utility rights-of-way.

JP Fuel. Military designation applied to aviation turbine fuels (e.g., JP-4, JP-5, and JP-8).

Kerosene. A general term covering the class of refined petroleum which boils between 370 degrees F and 515 degrees F (188 degrees C and 268 degrees C). Mostly used in oil lamps and cooking stoves.

Kerosene Type Aviation Turbine Fuel. JP fuel derived from kerosene without the addition of naphtha; characterized by a flash point of 100 degrees F (38 degrees C) or more.

Kinematic Viscosity. The ratio of viscosity of a liquid to its specific gravity at the temperature at which the viscosity is measured.

Lead Hazard. Poisonous contamination of the atmosphere, sludge, or other surroundings, particularly in petroleum storage tanks,-caused by tetraethyl lead or its residues.

Line Blind. A solid flat plate used to obtain absolute shut-off of flow. Also, referred to as spectacle plates or flanges, blinding plate, figure eights and paddle blinds.

Litre (L). Equivalent to 0.001 m^3.

LPG. Abbreviation for liquefied petroleum gas; propane, butane.

Lube Oil. Common contraction for lubrication oil; used to reduce friction and cool machinery.

MAJCOM. Major Command.

MFL. Magnetic flux leakage.

Micron. A unit of length equal to one millionth of a meter, especially used as a measure of the size of very fine particles found as contaminants in fuel.

MIL. A unit of length equal to one thousandth of an inch, especially used to measure the thickness of paints and coatings.

Military Specifications. Guides for determining the quality requirements for materials and equipment used by the military services (MIL).

MILL Scale. A magnetic coating formed on the surface of steel during processing in mills.

Mogas. Common contraction of motor gasoline, referring to fuel for land vehicles.

NACE. National Association of Corrosion Engineers.

Naphthas. Refined petroleum which boils at 800 degrees F (427 degrees C) to 4400 degrees F (2427 degrees C), used as a component of gasoline and solvents.

NATO. North Atlantic Treaty Organization.

NBBI. National Board of Boiler and Pressure Vessel Inspectors.

NBIC. National Board Inspection Code.

NFESC-OCD. Naval Facilities Engineering Service Center, Ocean Construction Division.

NFPA. Abbreviation for the National Fire Protection Association.

Nipple. Short length of pipe, usually used to make side branch connections.

Nondestructive Testing. A method of inspecting materials without cutting, drilling or otherwise destroying the material; usually used to examine steel plates, pipes, and welds.

Nozzle. A spout or connection, usually with a control valve through which fuel is discharged into a receiving container.

NPDES. National Pollutant Discharge Elimination System.

Octane Number. A numerical measure of the antiknock properties of automotive gasoline as measured against standard reference fuels, under controlled laboratory conditions. Iso-octane is a reference fuel whose octane number is given a value of 100.

Off-Spec. Commonly used contraction for off-specification, usually referring to fuel which is contaminated or otherwise deficient in quality.

Oil/water Separator. A device used to separate mixtures of oil and water, usually by the difference in specific gravity and usually to protect the environment from contamination by the oil.

Oily-water Mixture. Mixture in which water comprises more than half the total. Most such untreated mixtures contain less than 15 percent oil, some of which may be in emulsified form.

OMSI. Operation and maintenance support information.

Operating Storage Tank. Storage tank from which fuel is issued directly to the final-use vehicle such as a ship or aircraft, sometimes called day tanks or ready-issue tanks.

Orifice Plate. A plate with a hole in the center held between two flanges in a pipeline, used to create a drop in pressure which is proportional to flow and can be used to measure the flow or to modulate control devices.

OSHA. Occupational Safety and Health Act of 1970.

PACAF. Pacific Air Force.

Pantograph. A series of pipes, joined by flexible joints, used to connect fueling equipment to aircraft.

Parallel Pumps. Two or more pumps having common suction and discharge connections.

Particulate Matter. Solid particles such as dirt, grit, and rust, which contaminate fuel.

PDP. Pressure dew point.

pH. A number assigned to indicate whether a substance is acidic or alkaline (pH 7 is considered neutral, less than 7 is acidic and more than 7 is alkaline).

Pigging. The use of cleaning devices, called pigs or go-devils, to clean out the inside of pipelines.

Pig Trap. An arrangement of valves and closure devices to trap cleaning pigs at the end of their run through a pipeline.

Pile Cluster. A group of pilings driven close together and usually wrapped with wire rope to act as fender or mooring for small vessels.

PLC. Programmable logic controller.

POL. A commonly used abbreviation which broadly refers to all petroleum , oils, and lubricants.

Pour Point. The lowest temperature at which an oil will pour or flow without disturbance.

Pontoon Roof. A type of floating roof for a storage tank having liquid-tight compartments for positive buoyancy.

Pressure Drop. The loss in pressure of a liquid flowing through a piping system caused by friction of pipe and fittings, velocity, and change in elevation.

PSI or PSIG. Abbreviation for pounds per square inch, the unit of pressure measurement; gage pressure above atmospheric.

PSIA. Pounds per square inch absolute; pressure above an absolute vacuum.

PVC. Polyvinyl chloride.

Radiograph. An image produced on radiosensitive film by invisible radiation such as X-ray, specifically the image produced by radiographic inspection of welds and plates.

RDBMS. Relational Database Management System.

Ready-Issue Tank. Storage tank from which fuel is issued directly to the final-use vehicle such as a ship or aircraft, sometimes called day tank or operating storage tank.

Recoverable Fuel. That portion of the fuel oil which may be separated and collected from a given lot of contaminated fuel, by proper processing in the treating facility in question.

Recovered Oil. Used to denote untreated petroleum fuel removed from oil-water separators or picked up after being spilled on land or water. Also used to mean oil which has been separated from and collected from a given lot of contaminated fuel by processing in a treating facility.

Refueler. Tank vehicles used to resupply aircraft with fuel.

Reid Vapor Pressure. Vapor pressure measured under controlled conditions with the liquid temperatures at 100 °F (38 °C).

Residual Fuel Oil. Topped crude petroleum from refinery operations. Commercial grades of Burner Fuel No. 5, No. 6, and bunker fuels are residual fuel oils.

Relaxation Tank. Small tank in a fuel dispensing piping system downstream of filter/separators or fuel quality monitors designed to remove static electricity from the liquid

stream before discharge into a receiving tank.
Rotary Pump. A positive displacement pump which operates in rotary fashion such as a vane, gear, bucket, lobe, or screw pump; not centrifugal, turbine, or propeller pumps.

Rust. Ferric oxide, a reddish-brown scaly or powdery deposit found on the surface of steel and iron as a result of oxidation of the iron.

SAE. Abbreviation for Society of Automotive Engineers, used in conjunction with specification for viscosity of lubricating oils.

Scraper. A type of cleaning pig used in pipelines.

Service Headquarters. Defined as follows: Army - Headquarters Corps of Engineers - CEMP-ET; Air Force - The Air Force Fuels Engineer (HQAFCESA/CESM) through the applicable Major Command (MAJCOM) Fuels Engineer; Navy/Marine Corps - Naval Facilities - Office of the Chief Engineer (NAVFAC-OOCE); and Defense Fuel Supply Center (DFSC) - DFSC Facility Engineer.

Skimmer. A device used to collect thin layers of oil floating on a body of water.

Slop Oil. Oil or fuel which has become contaminated with other oils or substances, often requiring separation or treatment before it is fit for use.

Sludge. Heavy viscous oily mass found in the bottom of storage tanks and treatment vessels, often contains rust, scale, dirt, lead additives, wax, gum, or asphalt.

SPCC. Spill prevention control and countermeasure.

Specific Gravity. The ratio of the weight in air of a given volume of a substance to the weight in air of an equal volume of distilled water (62.4 lb/ft^3) (1000 kg/m^3), both taken at the same temperature, usually 60 °F (16 °C).

SSPC. Steel Structures Painting Council.

Static Electricity. Accumulation of electric charge on an insulated body; also the electrical discharge resulting from such accumulation.

Strapping. The process of determining the volume of a storage tank or cargo hold by measuring its linear dimensions.

Stripper Pump. A pump used to strip or remove the last bit of liquid from a tank or pipe.

Sump. A low area or depression which receives drainage.

Surge. Sudden increase in fluid pressure caused by sudden stopping of a moving stream as by a quick closing valve; hydraulic shock.

Surge Suppressor. Device designed to control or reduce surges; hydraulic shock absorber.

TAU. Twin agent unit.

Tolerance. An allowable variation from a specified standard of measurement, commonly applied to the accuracy of meters.

Top Loading. Method of filling tank cars and trucks through an opening in the top.

True Vapor Pressure. Vapor pressure measured at actual liquid temperature.

UPV. Unfired pressure vessel.

Vapor Lock. Malfunction of an engine fuel system or of a pumping system caused by vaporization of the fuel, usually associated with gasoline.

Vapor Pressure. Internal pressure of vapor in a liquid usually in pounds per square inch; an indication of volatility.

Viscosity. Measure of the internal resistance of a fluid to flow or movement, most commonly measured in centistokes.

VOC. Volatile organic compound.

Volatility. Measure of the tendency of a liquid to vaporize; vapor pressure.

Waste Oil. Oil from which the water and other contaminants cannot be removed by the available treating facilities, and hence is unfit for further use. This term is also loosely used for contaminated oil which may contain recoverable fuel collected at facilities having no treatment facility for fuel reclamation.

Water Bottom. Free water which has settled to the bottom of a storage tank.

Water Drawoff. A valve or similar device used to remove water from the bottom
of a tank.

Water Slug Shutoff. A valve in the discharge piping from a filter/separator which closes automatically when the water in the unit rises above a set level.

Wax. Viscous or solid high molecular weight hydrocarbon substance; paraffin.

Weatherproof. Type of enclosure for electrical apparatus for outdoor service in nonhazardous areas.

Wharf. A landing place where vessels tie up to load or unload; pier.

CUSTODIANS:
NAVY - YD
ARMY - CE
DLA - PS
AIR FORCE - 50

PREPARING ACTIVITY
NAVY - YD

PROJECT NO.
FACR-5021

STANDARDIZATION DOCUMENT IMPROVEMENT PROPOSAL

INSTRUCTIONS

1. The preparing activity must complete blocks 1, 2, 3, and 8. In block 1, both the document number and revision letter should be given.

2. The submitter of this form must complete blocks 4, 5, 6, and 7.

3. The preparing activity must provide a reply within 30 days from receipt of the form.

NOTE: This form may not be used to request copies of documents, nor to request waivers, or clarification of requirements on current contracts. Comments submitted on this form do not constitute or imply authorization to waive any portion of the referenced document(s) or to amend contractual requirements.

I RECOMMEND A CHANGE:	1. DOCUMENT NUMBER MIL-HDBK-1022A	2. DOCUMENT DATE *(YYMMDD)* 000301

3. DOCUMENT TITLE PETROLEUM FUEL FACILITIES

4. NATURE OF CHANGE *(identify paragraph number and include proposed rewrite, if possible. Attach extra sheets as needed.)*

5. REASON FOR RECOMMENDATION

6. SUBMITTER

a. NAME *(Last, First, Middle Initial)*	b. ORGANIZATION	
c. ADDRESS *(Include Zip Code)*	d. TELEPHONE *(Include Area Code)* (1) Commercial (2) DSN *(If applicable)*	7. DATE SUBMITTED: *(YYMMDD)*

8. PREPARING ACTIVITY

a. NAME COMMANDING OFFICER SOUTHERN DIVISION, NAVAL FACILITIES ENGINEERING COMMAND ATTN CODE 076DPD	b. TELEPHONE (*Include Area Code*) (1) Commercial (843) 820-7458 (2) DSN 564-7458
c. ADDRESS *(Include Zip Code)* P.O. BOX 190010 NORTH CHARLESTON, SC 29419-9010	IF YOU DO NOT RECEIVE A REPLY WITHIN 45 DAYS, CONTACT: Defense Standardization Program Office (DLSC-LM) 8725 John J. Kingman Road, Suite 2533 Fort Belvoir, Virginia 22060-6221 Telephone (703) 767-6888 DSN 427-6888