UFC 4-213-10
15 August 2002

UNIFIED FACILITIES CRITERIA (UFC)

DESIGN: GRAVING DRYDOCKS

APPROVED FOR PUBLIC RELEASE; DISTRIBUTION UNLIMITED

UNIFIED FACILITIES CRITERIA (UFC)

UNIFIED FACILITIES GUIDE SPECIFICATIONS (UFGS) FORMAT STANDARD

Any copyrighted material included in this UFC is identified at its point of use.
Use of the copyrighted material apart from this UFC must have the permission of the copyright holder.

U.S. ARMY CORPS OF ENGINEERS

NAVAL FACILITIES ENGINEERING COMMAND (Preparing Activity)

AIR FORCE CIVIL ENGINEER SUPPORT AGENCY

Record of Changes (changes are indicated by **1**\ ... /**1**/)

Change No.	Date	Location

This UFC superseded Military Handbook 1029/1, dated 31 January 1989. Figures do not conform to UFC 1-300-01, in that they do not contain metric measures. This will be corrected in the next revision.

FOREWORD

The Unified Facilities Criteria (UFC) system is prescribed by MIL-STD 3007 and provides planning, design, construction, sustainment, restoration, and modernization criteria, and applies to the Military Departments, the Defense Agencies, and the DoD Field Activities in accordance with USD(AT&L) Memorandum dated 29 May 2002. UFC will be used for all DoD projects and work for other customers where appropriate.

UFC are living documents and will be periodically reviewed, updated, and made available to users as part of the Services' responsibility for providing technical criteria for military construction. Headquarters, U.S. Army Corps of Engineers (HQUSACE), Naval Facilities Engineering Command (NAVFAC), and Air Force Civil Engineer Support Agency (AFCESA) are responsible for administration of the UFC system. Defense agencies should contact the preparing service for document interpretation and improvements. Technical content of UFC is the responsibility of the cognizant DoD working group. Recommended changes with supporting rationale should be sent to the respective service proponent office by the following electronic form: Criteria Change Request (CCR). The form is also accessible from the Internet sites listed below.

UFC are effective upon issuance and are distributed only in electronic media from the following sources:

- Unified Facilities Criteria (UFC) Index http://65.204.17.188//report/doc_ufc.html.
- USACE TECHINFO Internet site http://www.hnd.usace.army.mil/techinfo/index.htm.
- NAVFAC Engineering Innovation and Criteria Office Internet site http://criteria.navfac.navy.mil.
- Construction Criteria Base (CCB) system maintained by the National Institute of Building Sciences at Internet site http://www.nibs.org/ccb.

Hard copies of UFC printed from electronic media should be checked against the current electronic version prior to use to ensure that they are current.

AUTHORIZED BY:

Dwight A Beranek, P.E.
Chief, Engineering and Construction Division
U.S. Army Corps of Engineers

Dr. James W Wright, P.E.
Chief Engineer
Naval Facilities Engineering Command

KATHLEEN I. FERGUSON, P.E.
The Deputy Civil Engineer
DCS/Installations & Logistics
Department of the Air Force

Frank Lane
Director of Analysis & Investment
Deputy Under Secretary of Defense
for Installations and Environment
Department of Defense

CONTENTS

Page

CHAPTER 1 INTRODUCTION

Paragraph 1-1 SCOPE 1-1
1-2 POLICY 1-1

CHAPTER 2 SHIPYARD LAYOUT

Paragraph 2-1 SHOP FACILITIES 2-1
2-2 LAYDOWN SPACE 2-1
2-3 POWER AND UTILITIES 2-1
2-4 CRANE AND CRANE TRACKS 2-1
2-5 SHIP APPROACHES 2-1
2-5.1 Turning Basins 2-1
2-5.2 Drydock Orientation Effect 2-2
2-6 FITTING OUT/REPAIR PIERS 2-2
2-6.1 Existing Piers 2-2
2-6.2 New Piers 2-2
2-7 SILTING AND SCOURING 2-2
2-8 TOPOGRAPHY, HYDROLOGY, AND METEOROLOGY 2-2
2-8.1 Site Conditions 2-2
2-8.2 Yard Grades 2-2
2-8.3 Tide Range 2-2
2-8.4 Storm Potentialities 2-3
2-8.5 Water and Air Temperatures 2-3
2-8.6 Water Chemical Content 2-3
2-9 FOUNDATION CONDITIONS 2-3
2-9.1 Features 2-3
2-9.2 Borings 2-3
2-9.3 Pile Driving Records 2-4
2-9.4 Laboratory Tests and Soil Analyses 2-4
2-9.5 Bearing Capacities of Soils 2-4
2-9.6 Foundation Materials 2-4

CHAPTER 3 DETERMINATION OF GRAVING DOCK DIMENSIONS

Paragraph 3-1 MINIMUM INSIDE DIMENSIONS 3-1
3-2 REPAIR AND SHIPBUILDING DRYDOCKS 3-1
3-2.1 Basic Dimensions 3-1
3-2.2 Relationship to Height of Blocking 3-1
3-2.3 Allowance for Sonar Domes 3-1
3-2.4 Caisson Seats 3-4
3-3 DRYDOCKS FOR SHIPBUILDING ONLY 3-4
3-3.1 Height of Floor 3-4
3-3.2 Width 3-4
3-3.3 Services 3-4
3-4 INSIDE CONFIGURATION 3-4
3-4.1 Head End Shape 3-4
3-4.2 Entrance End 3-5

3-4.3 Cross Section 3-6

CHAPTER 4 STRUCTURAL TYPES OF DRYDOCKS

Paragraph 4-1 DESIGN AND CONSTRUCTION 4-1
4-1.1 Basis of Type Designation 4-1
4-1.2 Methods of Construction 4-1
4-2 TYPES DICTATED BY FOUNDATION CONDITIONS 4-1
4-2.1 Full Hydrostatic 4-1
4-2.2 Fully Relieved 4-2
4-2.3 Partially Relieved 4-3
4-2.4 Miscellaneous Types 4-3

CHAPTER 5 STRUCTURAL DESIGN

Paragraph 5-1 SCOPE 5-1
5-2 DEAD LOADS 5-1
5-2.1 Weight of Concrete Structure 5-1
5-2.2 Weight of Earth 5-1
5-3 HYDROSTATIC PRESSURE 5-2
5-3.1 Weight of Water 5-2
5-3.2 Buoyancy Computations 5-2
5-4 EARTH PRESSURE 5-2
5-4.1 Variations 5-2
5-4.2 Water or Ship in Dock 5-2
5-4.3 Dock Empty 5-2
5-5 LIVE LOADS 5-3
5-5.1 Shiploads 5-4
5-5.2 Wheel Loads 5-4
5-5.3 Loads on Pumpwell Overhead and Floors 5-7
5-5.4 Earthquake Forces 5-7
5-5.5 Bomb and Blast Resistance 5-7
5-6 SPECIAL CONDITIONS OF LOADING 5-7
5-6.1 Full Hydrostatic Drydocks 5-7
5-6.2 Partially and Fully Relieved Drydocks 5-7
5-6.3 Drydocks Built by Underwater Methods 5-8
5-7 MATERIALS AND DESIGN 5-8
5-7.1 Concrete 5-8
5-7.2 Reinforcing Steel 5-10
5-7.3 Foundations 5-10
5-7.4 Design 5-10
5-8 METHODS OF ANALYSIS 5-10
5-8.1 Full Hydrostatic 5-11
5-8.2 Fully or Partially Relieved 5-11
5-8.3 Computer Analysis 5-11
5-9 SAFETY CONSIDERATIONS 5-11
5-9.1 Basic Safety Standards 5-11
5-9.2 Safety Features Peculiar to Drydocks 5-11

CHAPTER 6 FLOODING

Paragraph 6-1 DESIGN FACTORS 6-1
6-1.1 Requirements 6-1
6-1.2 Flooding Periods 6-1
6-2 FLOODING METHODS 6-1
6-2.1 Common Intake Features 6-1
6-2.2 Flooding Culverts 6-3
6-2.3 Flooding Through the Caisson 6-4
6-2.4 Superflooding 6-4
6-3 HYDRAULIC DESIGN 6-5
6-3.1 Overall Factors 6-5
6-3.2 Evacuation of Flooding Time 6-5
6-3.3 Computation of Flooding Time 6-5

CHAPTER 7 DEWATERING

Paragraph 7-1 DEWATERING SYSTEMS 7-1
7-1.1 Requirements 7-1
7-2 DEWATERING SYSTEM COMPONENTS 7-1
7-2.1 Collector Channel 7-2
7-2.2 Sand Pumps 7-2
7-2.3 Dewatering Pump Suction Chamber 7-2
7-2.4 Pumping Plant 7-2
7-2.5 Pump Discharge Tunnel 7-3
7-2.6 Gratings 7-3
7-2.7 Salt Water Intake Screen 7-3
7-2.8 High Water Sensing System 7-3
7-3 BASIC REQUIREMENT FO DESIGN FACTORS 7-4
7-3.1 Pumping Time 7-4
7-3.2 Initial Cost of Installations 7-4
7-3.3 Power Considerations 7-4
7-4 PUMPING SYSTEMS 7-4
7-4.1 Components 7-4
7-4.2 Elevation of Discharge 7-5
7-4.3 Pumping Head 7-5
7-4.4 Pump Suction 7-5
7-4.5 Pump Discharge 7-7
7-4.6 Pump Capacity 7-7
7-4.7 Pump Efficiency 7-7
7-4.8 Pumps 7-7
7-4.9 Pump Drives 7-10
7-4.10 Driving Shaft 7-10
7-4.11 Elevation of Pumps 7-10
7-4.12 Priming 7-11
7-4.13 Heating and Ventilating 7-11
7-5 FIELD TSTING OF DEWATERING SYSTEM 7-11
7-5.1 Determination of Capacity 7-11
7-5.2 Power Input 7-11
7-5.3 Determination of Head 7-11
7-5.4 Tide Effect 7-12

CHAPTER 8 FITTINGS, SHIP BLOCKING, SUPPORTING FACILITIES AND SHIPS SERVICES

Paragraph 8-1 FITTINGS 8-1
8-1.1 Capstans 8-1
8-1.2 Bollards 8-2
8-1.3 Cleats 8-2
8-1.4 Stairways 8-2
8-1.5 Ladders 8-3
8-1.6 Railings 8-3
8-1.7 Marking Plates 8-4
8-1.8 Fenders and Chafing Strips 8-4
8-2 SHIP BLOCKING 8-4
8-2.1 Ship Supports 8-4
8-2.2 Dos and Side Shores 8-5
8-2.3 Keel Blocks 8-5
8-2.4 Bilge or Side Blocks 8-5
8-2.5 Type of Construction 8-5
8-3 SUPPORTING FACILITIES 8-5
8-3.1 Industrial Shop Facilities 8-5
8-3.2 Transportation Facilities 8-6
8-3.3 Weight and Materials Handling Equipment 8-8
8-3.4 Personnel Facilities 8-8
8-3.5 Storage Facilities 8-9
8-4 MECHANICAL SERVICES 8-9
8-4.1 Pipe Galleries and Tunnels 8-9
8-4.2 Fresh Water 8-10
8-4.3 Salt or Nonpotable Water Supply 8-10
8-4.4 Specific Requirements for Salt or Nonpotable Water 8-11
8-4.5 Wastewater Protection 8-11
8-4.6 Steam 8-14
8-4.7 Compressed Air 8-15
8-4.8 Wheeler System 8-15
8-4.9 Oxygen and Acetylene 8-16
8-5 ELECTRICAL SERVICES 8-18
8-5.1 Electrical Conduits 8-18
8-5.2 Substations 8-18
8-5.3 Power Uses 8-18
8-5.4 Methods of Installation 8-19
8-5.5 Power Requirements 8-19
8-5.6 Pumping Plant 8-19
8-5.7 Dock Services 8-21

CHAPTER 9 ENTRANCE CLOSURES

Paragraph 9-1 SELECTION 9-1
9-1.1 Requirements 9-1
9-1.2 Types 9-1
9-2 DESIGN OF FLOATING CAISSONS 9-2
9-2.1 Application 9-3
9-2.2 Requirements 9-3
9-2.3 Types 9-3
9-2.4 Ballast Control 9-3
9-2.5 Operation 9-3

9-2.6 Materials of Construction 9-4
9-2.7 Machinery 9-4
9-3 DESIGN OF BOX TYPE FLOATING CAISSONS 9-4
9-3.1 Shape 9-4
9-3.2 Ballast 9-5
9-3.3 Design Analysis 9-5
9-3.4 Equipment 9-10

CHAPTER 10 CONSTRUCTION

Paragraph 10-1 CRITERIA 10-1
10-1.1 Approach 10-1
10-2 DRYDOCK BODY 10-1
10-2.1 Clearing and Demolition 10-1
10-2.2 Rerouting Utility Lines 10-1
10-2.3 Excavation 10-1
10-2.4 Cofferdams 10-2
10-2.5 Foundation Piles 10-3
10-2.6 Foundation Course 10-4
10-2.7 Foundation Slabs 10-4
10-2.8 Sidewalls and Abutments 10-4
10-2.9 Miscellaneous Items 10-4
10-2.10 Backfill 10-5
10-3 ENTRANCE ENCLOSURES 10-5
10-3.1 Construction and Use 10-5
10-3.2 Dimensions 10-5
10-3.3 Ballast 10-5
10-3.4 Launching 10-5
10-3.5 Steel Caissons 10-5
10-3.6 Concrete Caissons 10-5
10-3.7 Closure Tests 10-5
10-4 SUPPORTING FACILITIES AND ACCESSORIES 10-6
10-4.1 Crane Rails 10-6
10-4.2 Cranes 10-6
10-4.3 Railroad Tracks 10-6
10-4.4 Bollards and bitts 10-6
10-4.5 Ladders 10-6
10-4.6 Manhole Steps 10-7
10-4.7 Dock Water Level Indicators 10-7
10-4.8 Marking Plates 10-7
10-4-9 Fenders and Chafing Strips 10-7
10-5 MECHANICAL AND ELECTRICAL EQUIPMENT 10-7
10-5.1 Installation 10-7
10-5.2 Capstans 10-7
10-5.3 Pumping Machinery 10-7
10-5.4 Piping and Flow Control Equipment 10-8

APPENDIX A BIBLIOGRAPHY A-1

APPENDIX B GLOSSARY B-1

APPENDIX C REFERENCES C-1

FIGURES

Figure Title

3-1 Designation of Drydock Features 3-2
3-2 Sonar Configuations 3-3
3-3 Graving Dock Cross Sections 3-7
4-1 Miscellaneous Types of Drydocks 4-4
5-1 Ship Blocking Loads 5-5
5-2 Ship Blocking Loads 5-6
5-3 Examples of Drydocks with Slabs Constructed Underwater and Walls and Finish Floor Constructed in Dry 5-9
7-1 Characteristic Curves for 54-Inch Mixed Flow Pump 7-8
7-2 Curves From Field Tests 7-13
8-1 Ship Blocks 8-7
8-2 Schematic of Conditions for Portable Sewage Pumping Systems in Graving Docks 8-13
9-1 Cross Section and Typical Framing Arrangement of Welded Caisson 9-6
9-2 Typical Horizontal Girder for Welded Caisson 9-7
9-3 Detail of Gasket for Caisson 9-12

TABLES

Table Title

3-1 Basic Drydock Dimensions 3-4
3-2 Design Considerations for Various Head End Shapes 3-5

CHAPTER 1

INTRODUCTION

1-1 **SCOPE**. This section deals with the selection of an exact location and type of drydock construction. It is assumed that the general vicinity, such as a specific shipyard, has been selected, that the size of ship to be accommodated has been determined, and that the drydock function (that is. shipbuilding or repair) has been decided. Consideration must be given to strategic site selection to meet present or future naval requirements, ease of defense, and general accessibility to and from the sea.

1-2 **POLICY**. Generally, specify as many requirements as possible from those considerations necessary for an ideal site. For drydocks constructed on non-ideal sites, compromises are necessary regarding desirable factors. Drydock concepts encompass a variety of types, conditions, capabilities, performances, and cost effectiveness. Perform an evaluation of interdependent technical and economic factors that permit a selection among alternatives, to arrive at an optimum drydocking facility for stated mission at a given geographic location. Evaluation shall be based on life cycle costs including initial investment, operation, maintenance, and terminal value.

CHAPTER 2

SHIPYARD LAYOUT

2-1 **SHOP FACILITIES**. Locate a drydock near yard supporting industrial shops, or vice versa, from which material requiring fabrication or manufacture may be obtained.

2-2 **LAYDOWN SPACE**. Provide ample space on both sides of a drydock. If there are no restrictions, furnish a strip at least 76.2 m (250 ft) wide on each side of the drydock coping and at the head end.

2-3 **POWER AND UTILITIES**. Proximity to sources of power and utilities is desirable but seldom a determining factor. Electricity, fresh water, saltwater fire protection, compressed air, steam, oxygen, acetylene, and sewers are usually required as described in Chapter 8.

2-4 **CRANE AND CRANE TRACKS**. Captive cranes should not be used if it can be avoided. Trackage should be interconnected for portal crane utilization elsewhere in the same yard.

2-5 **SHIP APPROACHES**. Maneuvering a ship into a drydock necessitates careful attention to the shape of the approach body of water, locations of ship channels, prevailing winds, currents, and relationship to other waterfront structures.

2-5.1 **Turning Basins**. A ship must parallel the long axis of a drydock before it enters; therefore, provide a turning basin of appropriate width, length, and depth of water outboard of a drydock entrance.

2-5.1.1 **Measurements**. The length and depth of a drydock are indicative of the maximum ship to be accommodated. Use these measurements to define the size of a turning basin:

2-5.1.1.1 **Width**. The turning basin should have a width outboard of the drydock at least two times the dock length and properly shaped for turning.

2-5.1.1.2 **Depth**. The depth of water in the turning basin should be no less than that at the entrance sill of the drydock.

2-5.1.2 **Allowance for Turns**. Where piers or other structures extend into a waterway and flank the approach to a drydock entrance, the turning basin should be large enough to allow a ship to be turned before coming abreast of such flanking structures.

2-5.1.3 **Clearance**. A drydock must not be located where flanking structures are too close to the path of a ship entering or leaving the drydock. Leave room for tugs to operate beside a ship until it is clear of the drydock entrance. The distance between such structures and the side of the ship path should not be less than 45.7 m (150 ft).

2-5.2 **Drydock Orientation Effect**. In some cases, through necessity or choice, a drydock may be oriented with the axis at an acute angle to the general shoreline.

2-5.2.1 **Advantage**. This orientation is advantageous where, similar to a river, there is a current parallel to the shoreline, in which case the slanted position precludes the necessity of having a ship abreast of the current flow when entering or leaving the drydock.

2-5.2.2 **Modifications**. Turning basin layouts are modified by such positioning, but the guidance for clearance of structures flanking the entrance must be observed.

2-6 **FITTING OUT/REPAIR PIERS**. Fitting out or repair piers should be provided adjacent to drydocks.

2-6.1 **Existing Piers**. In planning drydocks for existing shipyards, it may be that existing piers can serve this purpose for ships to be built or overhauled in the dock. The locations of such piers might influence positioning new drydocks reasonably near the piers, but the importance of this is not great since it involves only a single transfer of the ship after undocking.

2-6.2 **New Piers**. When fitting out/repair pier capacity does not exist, new piers must be included in the project as essential support for drydocks. Refer to MIL-HDBK-1025/1A, *Piers and Wharves*, for pier design.

2-7 **SILTING AND SCOURING**. Ascertain the stability of the access waterway with regard to silting or scouring. A prospective site should be reconsidered if the possibilities of silting or scouring indicate excessive future dredging maintenance. Study historical characteristics of the waterway and possible effects on current flow due to planned new work or anticipated future structures.

2-8 **TOPOGRAPHY, HYDROLOGY, AND METEOROLOGY**

2-8.1 **Site Conditions**. Prior to the design of a drydock, certain minimum information is required about conditions at the proposed site. Drydock construction methods used are usually closely related to site conditions and to the type and shape of a drydock.

2-8.2 **Yard Grades**. The coping of a new drydock must be compatible with general grades in a yard, or at least the grades in the vicinity of the drydock and supporting facilities serviced by drydock cranes. Also, the elevation of the top of a drydock must provide a certain minimum freeboard dependent on the highest anticipated tides and waves.

2-8.3 **Tide Range**. Ascertain the tidal range. Use this information as a basis to determine the final height of a drydock, and also the height and strength of cofferdams or other temporary structures possibly involved in the drydock construction. For predictions, which may be peculiar to the specific site, refer to records and predictions

of *National Oceanic and Atmospheric Administration (NOAA)*, and to the local historical records.

2-8.4 **Storm Potentialities**. Ascertain potentialities of a site. These data have a bearing on the determination of the freeboard height of a drydock and also on the design of temporary construction work. Consider designing for at least a 100-year-storm.

2-8.4.1 **Wind Effects**. Include a study of prevailing winds and their velocities, fetch of water involved, and the length and height of waves. When these data are combined with tide records, they indicate the expected probable high water conditions.

2-8.4.2 **Wind Records**. The wind effects may influence the design of fenders or moorings contiguous to a drydock. Refer to NOAA wind records for areas of the United States and possessions.

2-8.5 **Water and Air Temperatures**. Approach body of water temperature ranges are important in designing heating and ventilating systems, coolers, cathodic protection systems, and any systems utilizing the water. Air temperature data are required for similar reasons. Obtain water and air temperature in the vicinity from NOAA and the local historical records.

2-8.6 **Water Chemical Content**. The chemical content of water is subject to pollution when a drydock is located on a river. When water is supplied by wells or well points from soil layers permeated by other than seawater, the chemical content is not known. The corrosiveness of the water must be determined for design of pipes, coolers, any equipment utilizing the water, pumping equipment, and drydock pressure relief systems. Refer to MIL-HDBK-1005/7A *Water Supply Systems*.

2-9 FOUNDATION CONDITIONS

2-9.1 **Features**. Drydocks generally have diverse and varied types of foundation designs, which encompass the whole gamut of soil and foundation engineering. Designs are found in the complete range of such engineering, from the simplest spread footing to a complex elastic mat. Consequently, soil investigations must be especially thorough and complete in the determination of a great variety of soil properties.

2-9.2 **Borings**. Examine all available records of borings in the vicinity of a proposed site. The scope of previous borings will help determine the program extent for additional borings. For soil investigation procedures, refer to DM-7.01, *Soil Mechanics*.

2-9.2.1 **Depths of Borings**. Overall or mean soil pressures under drydocks are not great; therefore, for areas under the main body of a dock, borings need not be as deep as for other structures where load concentrations are severe. Where a drydock is likely to be the relieved type, the depths of borings should be sufficient to allow proper analyses of percolation problems. Where piles, either the bearing or holddown types, might be used, boring depths should adequately indicate the soils to be penetrated.

2-9.2.2 **Usage**. Borings determine soil properties and ground water levels for establishing cutoff elevations for piles supporting special structures. Borings can also be used for conducting permeability and pumping tests, if necessary. Refer to DM-7.01 *Soil Mechanics* for criteria for pumping and permeability field tests and laboratory permeability tests.

2-9.3 **Pile Driving Records**. Consult previous pile driving records for applicable information. Supplement these records, if necessary, by new test pile data, especially in areas where appurtenant foundation structures may be used for track supports, capstan foundations, and similar facilities. Pile driving information and equipment are discussed in DM-7.02 *Foundations and Earth Structures*.

2-9.4 **Laboratory Tests and Soil Analyses**. Laboratory tests applicable to soils are generally necessary. For application and interpretation of such tests refer to DM-7.01.

2-9.5 **Bearing Capacities of Soils**. Make tests for bearing capacity appropriate to the types of applied loading in accordance with provisions of DM-7.01 *Soil Mechanics*. For designs of drydock cross-sections, especially those with thin floors, the elastic modulus of material under a floor is important.

2-9.6 **Foundation Materials**. Many types of foundation materials may be encountered in a site, and almost all may be utilized for supporting a drydock.

2-9.6.1 **Effect on Structures**. This material variability, however, results in a number of structural types from which a selection must be made. For selection of structural types affected by foundation conditions, refer to Chapter 4.

2-9.6.2 **Soils**. Types of soil which may be encountered, and upon which drydocks may be founded, include soft and hard rock, hardpans and shales, sand and/or gravel, soft and hard clay, marl, soft and hard mud, and certain types of coral. Extremely cavernous coral, through which water flows in such quantities as to preclude even grouting, cannot be used as a site support.

CHAPTER 3

DETERMINATION OF GRAVING DOCK DIMENSIONS

3-1 **MINIMUM INSIDE DIMENSIONS**. This chapter presents design criteria on graving dock dimensions with particular reference to minimum inside length, width, depth, and inside configuration. The minimum inside dimensions of a graving dock depends on the classes of ships to be accommodated. However, the exact configuration of the inside of the walls and the resulting shape of the inside cross section will represent a compromise between several conflicting factors, the dominating one being the structural type that is finally selected. For designation of drydock features, see Figure 3-1.

3-2 **REPAIR AND SHIPBUILDING DRYDOCKS**. This type of double function drydock is the only type constructed in naval shipyards. Ships needing routine maintenance and repair, or those coming into drydock in a damaged condition, obviously require a deeper dock than ships under construction that are generally removed to a fitting-out pier for completion. A damaged ship may have a severe list and/or trim requiring additional drydock depth.

3-2.1 **Basic Dimensions**. Lay out drydock plans according to the applicable type of ship as shown in Table 3-1. Guidance for dimensional allowances to ease ship positioning and provide industrial space for shipbuilding or repair work are:

- Keel block height (normal) 1.2 - 1.8 m (4-6 ft)
- Clearance over blocks 0.6 m (2 ft)
- Length clearances:

  Head end 1.5 – 3.0 m (5-10 ft)

  Outboard end 4.6 – 12.2 m (15-40 ft)
- Width clearance each side 3.0 – 4.6 m (10-15 ft)

3-2.2 **Relationship to Height of Blocking**. The draft of a ship that can be docked for any given depth from water level to drydock floor is associated with the height of the blocking. For new docks, use 1.22 m (4 ft) minimal height of blocking, giving consideration to higher blocking required for docking vessels with sonar domes.

3-2.3 **Allowance for Sonar Domes**. Sonar domes are ordinarily located on the fore part of the ship keel. For a new dock to accommodate vessels so equipped, use the height of blocking required for removing domes with a sonar dolly. Sonar equipment is of various configurations and no set rules can be given (see Figure 3-2). Specific criteria shall be outlined in project requirements. Sonar dome pits have been installed in some drydocks to reduce the required height of blocks.

Fig. 3-1, Designation of Drydock Features

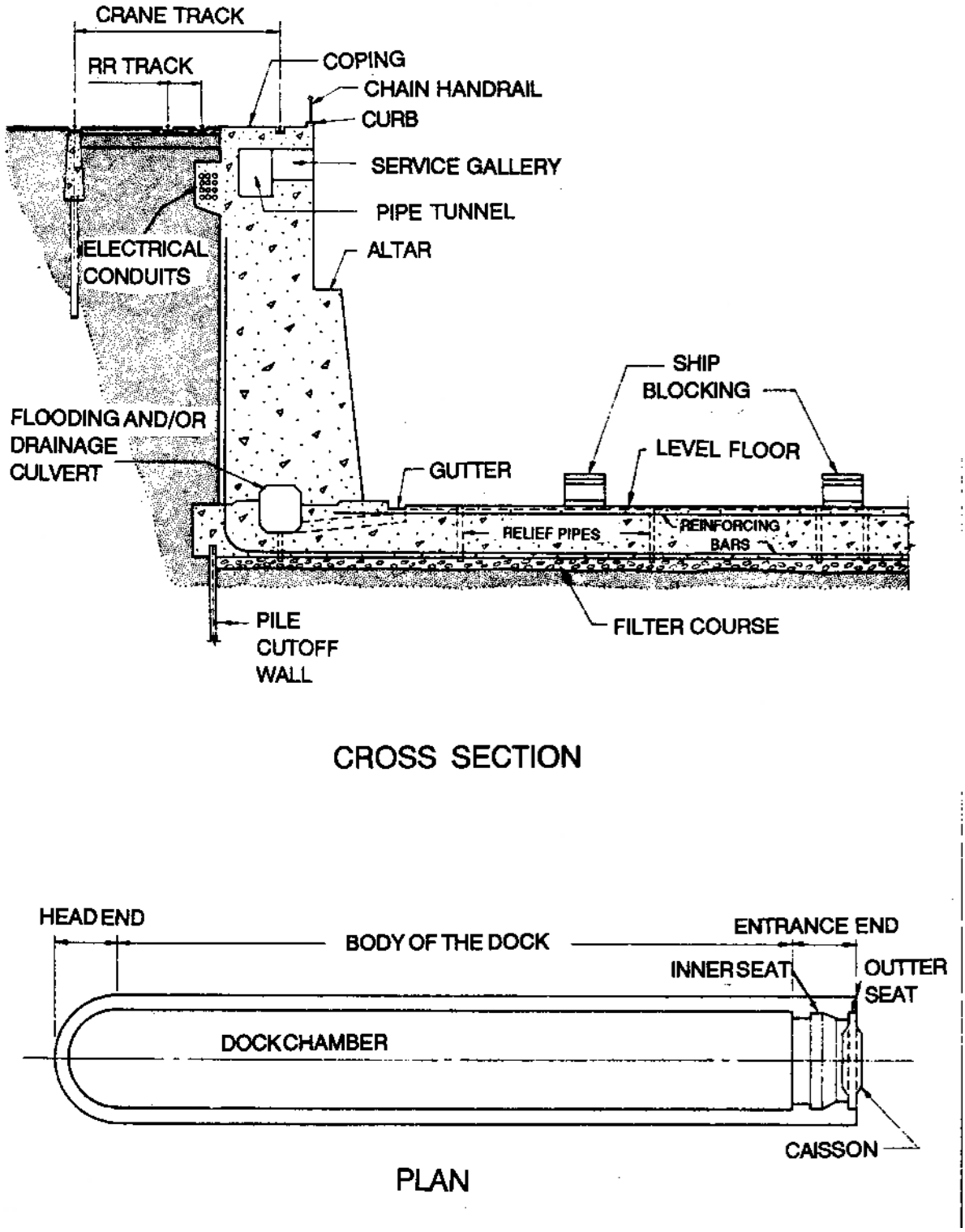

Fig. 3-2 Sonar Configurations

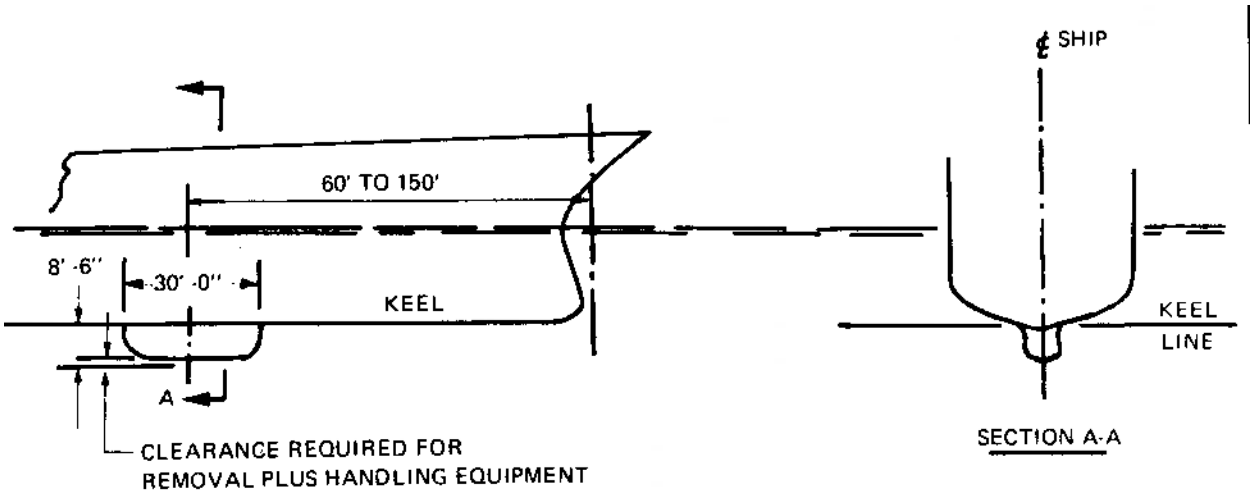

TYPICAL 30-FOOT SONAR

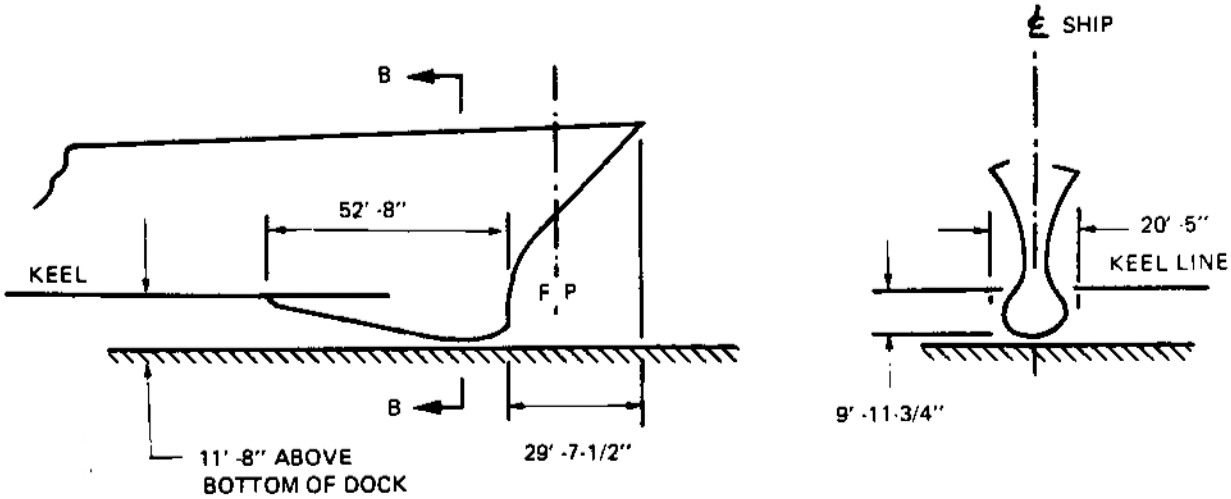

TYPICAL BOW DOME

Table 3-1 Basic Drydock Dimensions

Ship Type [1]	Clear Inside Body Width (m (ft))	Length, Coping at Head to Outer Caisson Seat (m (ft))	Depth, MHW to Floor of Dock (m (ft))
Submarine [4]	27.4 (90)	192 (630)	13.1 (43)
Destroyer or Frigate	27.4 (90)	198 (650)	12.8 (42) [2]
Cruiser	35 (115)	243.8 (800)	11.6 (38)
Auxiliary	39.6 (130)	259.1 (850)	13.7 (45)
Carrier	54.9 (180)	365.8 (1200)	16.8 (55) [3]

[1]. Refer to Waters Toolbox for characteristics of other ships.
[2]. Allowance for sonar domes included.
[3]. Damaged condition
[4]. Except Ohio class.

3-2.4 **Caisson Seats**. Provide an inner and an outer caisson seat at the entrance to graving docks. The outer seat is required to permit repairs to be made on the inner seat. For seat dimensions, refer to Chapter 9. Double-faced seats are required if a superflooding feature is installed.

3-3 **DRYDOCKS FOR SHIPBUILDING ONLY**. These drydocks, although sometimes built under the auspices of the Navy, are generally built in private shipyards and usually for a particular class or classes of ships.

3-3.1 **Height of Floor**. The draft at the time of undocking is predicated on the degree of vessel completion to be attained in the drydock before removal to fitting-out pier, and the height of the floor below mean high water must be established accordingly.

3-3.2 **Width**. This type of drydock is usually semi-permanent for economical reasons, and may be made narrower than repair drydocks for the same class of ships. Provide sufficient clearance to accommodate the required construction equipment between the hull and walls.

3-3.3 **Services**. Provide only electricity, steam, air, water, and other services necessary for ship construction.

3-4 **INSIDE CONFIGURATION**

3-4.1 **Head End Shape**. The head end of the drydock may be trapezoidal, semicircular (see Figure 3-1), square, or ship shape. Although there are advantages and disadvantages for each shape, sometimes one best fits the pattern of adjacent

structures. There are other advantages and disadvantages which are directly associated with the operation of the drydock itself. A tabulation of these for each shape of head end is shown in Table 3-2, and is to be used as follows:

3-4.1.1 **Square**. Use the square end for carrier docks, for multiple docking, or for docks that are likely to have future extensions.

3-4.1.2 **Semicircle**. Use the semicircular end for medium sized docks, that cannot readily be lengthened at the head end.

Table 3-2 Design Considerations for Various Head End Shapes

Design Considerations	Trapezoid	Semicircle	Square
Economy of formwork	Best	Fair	Poor
Economy of concrete	Good	Best	Poor
Simplicity of trackwork	Good	Best	Poor
Simplicity of installation of service facilities	Good	Poor	Best
Fit into yard	Good	Good	Poor
Adaptability for future extensions	Fair	Poor	Best
Providing access to dock floor:			
For Carriers	Poor	Fair	Best
For Other Ships	Good	Good	Good
Suitability for multiple docking	Poor	Fair	Best

3-4.1.3 **Trapezoid**. Use the trapezoidal shape for small docks that are not likely to be lengthened at the head end.

3-4.2 **Entrance End**. At the entrance end of a dock, the walls may be vertical or sloped outward. Refer to Chapter 9 for caisson dimensioning and details of the seats.

3-4.2.1 **Clearances**. Ship clearances are not as large at the entrance as in the body of the dock where working space is necessary. For docks having vertical walls, allow 1.52 m (5 ft) minimum clearance from the ship hull on each side.

3-4.2.2 **Roadway**. Where an entrance caisson is to be used as a roadway for vehicular traffic, the dock coping in the way of the caisson shall be designed and detailed to suit.

3-4.3 **Cross Section**. The most important influence of the inside as well as the outside shape of a drydock cross section is the structural type (and construction methods) adopted. For relation of shape to these factors, see Figure 3-3.

3-4.3.1 **Floor and Wall Coping Elevation**. Design the coping of the drydock wall high enough so that it will not be overtopped by severe waves which could possibly occur at high water, or at the grade of the surrounding yard, whichever is higher. Establish floor elevation as set forth in sections 3-1 through 3-3; normally floors shall be level in both directions.

3-4.3.2 **Service Tunnels and Galleries**

3-4.3.2.1 **Piping**. Provide service tunnels in and near the top of walls for piping, with galleries from these openings into the drydock chamber. Service tunnels and galleries should be designed and constructed such that they are kept dry at all times. Sump pumps and isolation valves should be installed if necessary. Tunnels should be wide enough to accommodate all of the required piping plus clearance for people to walk and to effect repairs. The height should provide 1.98 m (6 ft 6 in) headroom even where pipe crossovers exist. Refer to section 3-4.3.5 for the relation of shape and location of tunnels to crane tracks.

3-4.3.2.2 **Electric Lines**. On small docks, electric lines are placed in ducts encased in concrete on the land side of the walls. For large docks, where the electrical requirements are great, place lines in a separate concrete electrical tunnel on the land side.

3-4.3.3 **Steps or Altars**. The number of setbacks or altar platforms in the inboard faces of the dock walls shall be kept to a minimum.

3-4.3.3.1 **Single Stepback**. For gravity walls, a single stepback may be made, part way up on the inboard face, to reduce concrete thickness in the upper part of the wall and to improve the stability of the wall.

3-4.3.2.2 **Low Step at Base of Wall**. In some instances, a low step may be provided at the base of the wall to facilitate drainage system details. This step is not objectionable if it is not too wide, and will result in economy by reducing the effective height of the wall.

Fig. 3-3 Graving Dock Cross Sections, Showing Shape as Determined by Structural Type and Construction Method

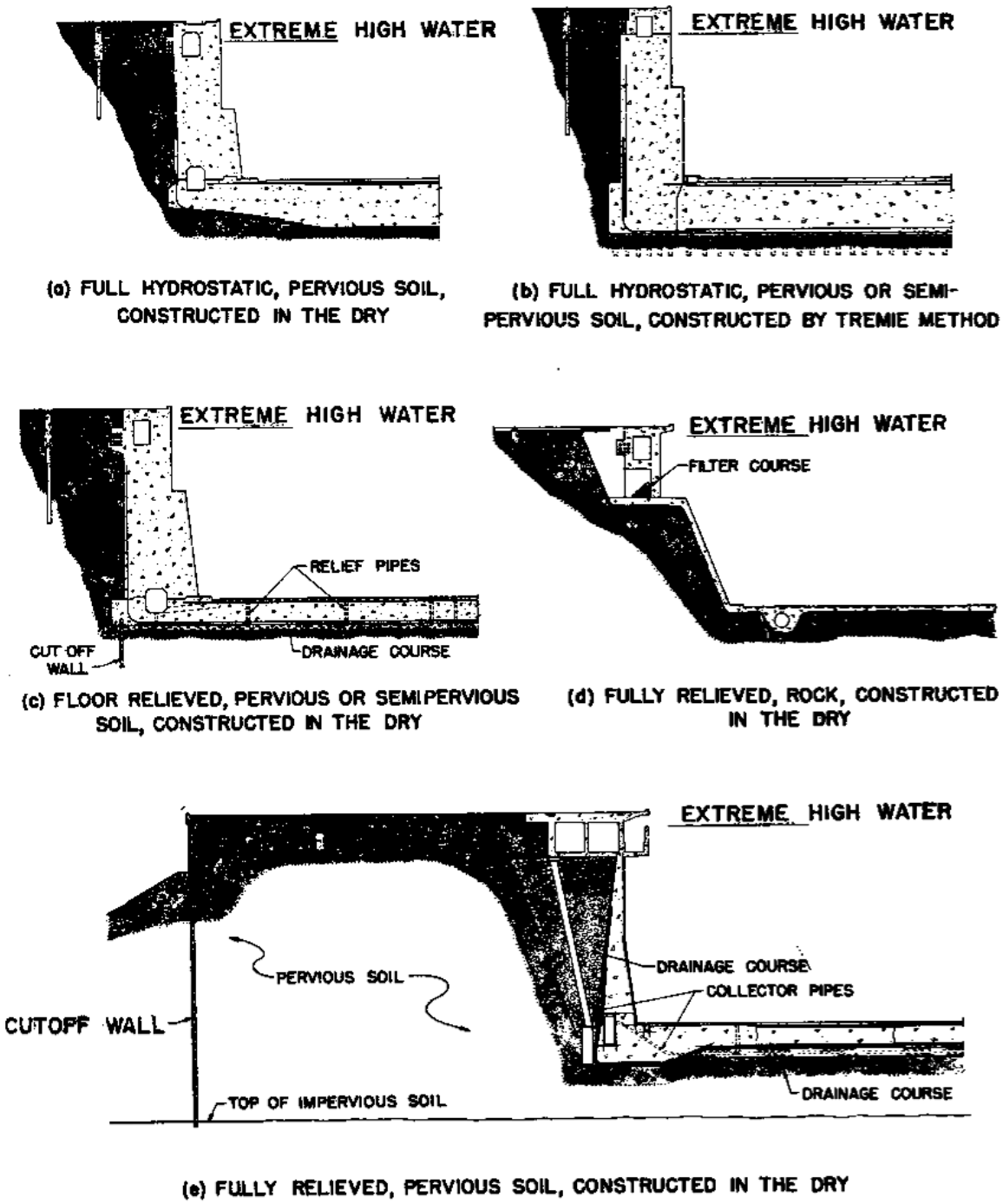

3-4.3.4 **Flooding and Drainage Tunnels**. Flooding and drainage tunnels are usually provided in the walls of drydocks. Sometimes, these tunnels may be eliminated or made of nominal size if flooding is accomplished through a floor culvert near the entrance and the intake to the main dewatering pumps is also through the floor.

3-4.3.4.1 **Large Docks**. For larger docks, even if flooded and dewatered as stated above, a small tunnel and/or system of sumps may be advisable for final stripping of the water from the floor.

3-4.3.4.2 **Tunnel Design**. In all cases, the tunnel should be made as small as is compatible with hydraulic requirements. Large tunnels should never be less than 6 ft high. Except for pure gravity walls, drainage tunnels present structural problems and result in increased cost. Tunnels should be located in the walls in order to create the most favorable stress conditions.

3-4.3.5 **Crane Rails**. Place one crane rail on top of the wall as close to the centerline of the drydock as possible and compatible with other wall and tunnel design considerations. Never place the inboard rail nearer than 1.52 m (5 ft) to the edge of the coping. Rails should be set with the top flush with the concrete surface. The companion rail is generally located off the wall structure and supported independently. For additional criteria regarding location of crane rails, refer to Chapter 8. For details of rail supports and portal crane trackage, refer to MIL-HDBK-1005/6, *Trackage*.

CHAPTER 4

STRUCTURAL TYPES OF DRYDOCKS

4-1 **DESIGN AND CONSTRUCTION**. This section deals with the influence of foundation requirements on shape and the reasoning leading up to specific type selection.

4-1.1 **Basis of Type Designation**. Type designations are determined by the structural requirements necessary to neutralize the pressure of the water that surrounds it.

4-1.1.1 **Hydraulic Pressure**. Hydraulic pressure can be resisted by the employment of sufficient weight and strength to resist the full pressure potential, or can be diminished by absorbing the flow so as to lower the hydraulic gradient under the drydock. The degree to which the water pressure is relieved determines the type terminology: (1) full hydrostatic; (2) fully relieved; and (3) partially relieved.

4-1.1.2 **Piles**. Each of the three types of drydocks may be built with or without piles. For the full hydrostatic type, piles may be used to engage soil beneath the drydock to contribute to the holddown weight. For the fully and partially relieved types, piles may be used to improve the elastic modulus of the foundation or to reinforce the soil at locations of excessive soil pressure; for example, beneath the toes of walls or under ship blocking.

4-1.2 **Methods of Construction**. Since a drydock is constructed on the shore of or extending into water, there is always the problem of excluding water from the construction site. To define completely the structural type of a drydock, it is generally necessary to state its method of construction.

4-1.2.1 **Water Exclusion**. On sites where water exclusion is feasible, a cofferdam, which is in itself of a nature of a drydock, should be used. Since it must be deeper and wider than the finished drydock, a cofferdam often presents technical and engineering problems more difficult than for the structural design of a drydock itself. The structural type and shape of the drydock may be influenced by the method used to solve the cofferdam problem. On sites where water exclusion is not feasible, a drydock must be constructed by underwater methods, in which case the method used also influences the structural type and shape.

4-2 TYPES DICTATED BY FOUNDATION CONDITIONS

4-2.1 **Full Hydrostatic**. A drydock is classed as full hydrostatic unless there is a relief drainage system that lowers the natural hydraulic head on the walls or floor. No material, even rock, can be considered impervious in the sense that it will prevent or decrease the hydraulic pressure on the structure. The full buoyancy of the drydock must be resisted by one or more of the following factors: (1) weight of concrete; (2) weight of soil below the dock engaged by holddown devices; or, (3) weight of earth

resting on a ledge formed by the projection of the floor slab beyond the sidewalls or friction of the earth on the sidewalls.

4-2.1.1 **Selection of Type**. Theoretically, a full hydrostatic drydock can be built under almost any site or foundation condition. However, for large and deep docks, where the pressure on the floor and sidewalls is great, and especially where it is not feasible to secure a satisfactory holddown system to the material beneath the dock, economic considerations may force the choice of another type.

4-2.1.1.1 **Dry**. A full hydrostatic type of dock does not require relief pumping and, therefore, has the least cost of power and maintenance. If possible, and where all other local conditions are suitable, it should be constructed in the dry.

4-2.1.1.2 **Wet**. All drydocks constructed in the wet are of the full hydrostatic type because conditions preclude installing reliable relief systems underwater. Docks of this type can be constructed with or without pile holddowns. See (a) of Figure 3-3 for the cross section of a full hydrostatic dock constructed in the dry and (b) of Figure 3-3 for a dock constructed by tremie methods.

4-2.2 **Fully Relieved**. A fully relieved drydock requires a drainage system to eliminate or reduce the pressure on the floor and walls so that these elements may be of minimum size. Lower original cost will be offset to some degree by higher pumping costs throughout the life of the structure. The pressure relief type may be built for all types of foundation conditions if the flow of water is naturally cut off by not too pervious soil, or by natural or manmade means. The exception is for drydocks constructed in the wet.

4-2.2.1 **Drydock in Rock**. For this type, it is necessary to line the rock excavation with concrete and provide weep holes through the floor and sidewall concrete lining. For an example of this type, see (d) of Figure 3-3.

4-2.2.2 **Drydock in Impervious Soil**. Where the soil is impervious, or nearly so, and the volume of seepage water to be handled is small, provide for this water to be drawn off through drainage courses placed under the floor and against the walls. This drainage course may or may not be supplemented by a pipe system to carry the seepage water into the drydock chamber for disposal by pumping. The volume of seepage water that must be pumped during the life of a drydock will depend on the degree of perviousness of the soil.

4-2.2.3 **Drydock in Pervious Soil**. For a fully relieved drydock to be built in pervious surrounding soil, provide a suitable cutoff outside the drydock to stop the greater part of the general flow.

4-2.2.3.1 **Sheet Pile Cutoff**. A drydock may have an immediate surrounding of granular material underlain by an impervious stratum. A sheet pile cutoff, perhaps originally a part of the construction cofferdam and located at a distance from the drydock, when driven to the impervious layer, can provide the necessary obstruction for

cutting off the large volume of seepage flow which would otherwise reach the drydock. For an example of this type, see (e) of Figure 3-3.

4-2.2.3.2 **Granular Material Filter**. Granular materials generally found at these drydock sites must be excluded from the relief system flow. This requires the use of carefully designed filter courses and a system of drainage pipes adjacent to the walls and under the floor. The amount of pumping for this type will depend on the efficiency of the cutoff and the permeability of the soil.

4-2.3 **Partially Relieved**. A partially relieved drydock has relief provided for the floor only. Its use reduces the amount of floor concrete and minimizes difficulty in construction of the cofferdam. Provide the following:

4-2.3.1 **Cutoff Wall**. Generally, a cutoff wall to surround the floor area only.

4-2.3.2 **Filter Course**. A filter course under the floor. A system of collector pipes in the filter course may be used to carry the seepage water into the drydock collecting tunnel.

4-2.3.3 **Alternate**. As an alternative to a collector system, provide holes through the floor for the seepage water to flow into the drydock chamber then through trenches and scuppers to the collecting tunnel. See (c) of Figure 3-3.

4-2.4 **Miscellaneous Types**. For drydocks of temporary or semi-permanent nature, a great variety of types may be used. These types are so much different in general character from the conventional naval drydock that classification in accordance with the method of solving the water pressure problem is not entirely definitive. These drydocks are generally for shipbuilding or for building other types of floating structures, and take a great variety of shapes and forms (see Figure 4-1). For these drydocks, provide the simplest drainage systems. Either the floor or walls, or both, may not be watertight, and the water may seep through them into the dock chamber and run off the floor into trenches or pump sumps for disposal by pumping.

Figure 4-1 Miscellaneous Types of Drydocks

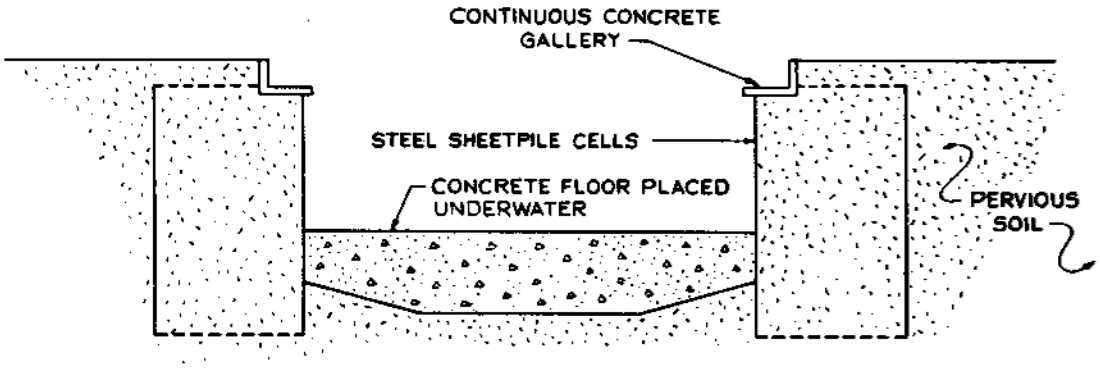

(a) SEMIPERMANENT SHIPBUILDING DRYDOCK

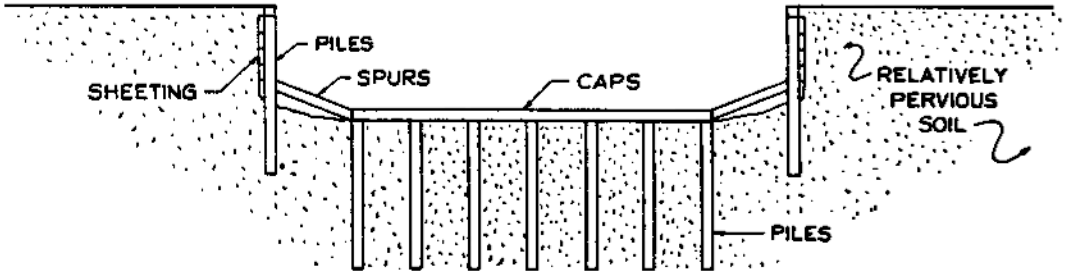

(b) TEMPORARY, ALL TIMBER DRYDOCK, CONSTRUCTED IN OPEN CUT FOR BUILDING FLOATING STRUCTURES

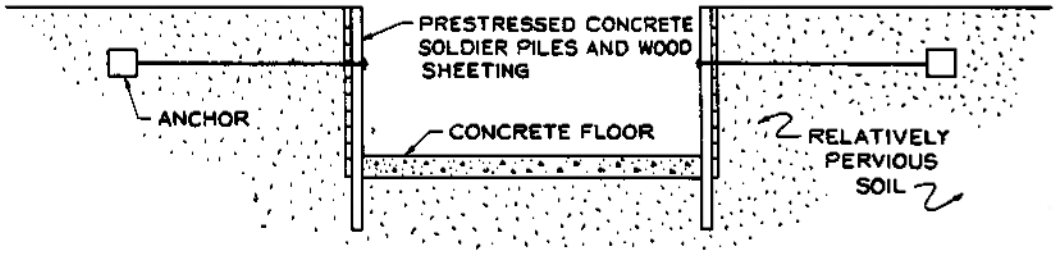

(c) TEMPORARY DRYDOCK, CONSTRUCTED IN OPEN CUT FOR BUILDING TUNNEL SECTIONS

CHAPTER 5

STRUCTURAL DESIGN

5-1 **SCOPE**. This section presents criteria on structural design of drydocks, with particular reference to dead loads, hydrostatic pressure, earth pressure, live loads, special conditions of loading, materials and design stresses, and methods of analysis.

5-2 **DEAD LOADS**. Dead loads are of special significance because the deadweight of the structure, including all mobilizable earth weight plus friction and holddown piles, must be greater than the maximum buoyancy.

5-2.1 **Weight of Concrete Structure**. For design purposes, compute the weight of reinforced concrete structures on the basis of 2403 kg/m^3 (150 lb/ft^3) (weight in air).

5-2.2 **Weight of Earth**. In computing the total resistance to uplift, include the weight of earth engaged by any extension of the slab beyond the outside of the wall. Earth below the drydock floor, when engaged by holddown piles or other devices, is included in the computation of the total weight.

5-2.2.1 Weight of Earth on Floor Slab Projections

5-2.2.1.1 **Specific Weights**. Unless special, lightweight soils are encountered, use 961 kg/m^3 (60 lb/ft^3) for submerged soils and 1602 kg/m^3 (100 lb/ft^3) for soils above water levels.

5-2.2.1.2 **Computation of Volume**. To compute volume with a dock empty and with mean high water, use the soil weight above the slab projection between a vertical plane at the outer edge of the projection and the back of the wall. With a dock empty and extreme high water, add the weight of earth wedge between the vertical plane and an intersecting plane sloping 15 degrees outward from the vertical plane.

5-2.2.2 Weight of Earth Engaged by Floor Slab Holddowns

5-2.2.2.1 **Specific Weights**. This earth is always submerged. For ordinary soils, use 961 kg/m^3 (60 lb/ft^3.) Since this weight is usually very important, determine the correct weight by test if there is any indication that the soil may be of a greater or lesser weight.

5-2.2.2.2 **Computation of Total Weight**. The holddown capacity of individual piles may be computed by methods given in DM-7.02 *Foundations and Earth Structures*. The total holddown capacity is not necessarily the sum of the individual capacities of a pile group and may never be larger than the weight of the block of soil included in the pile group.

5-2.2.2.2.2.1 **Weight**. In computing the weight of this block, assume its plan dimensions to extend beyond the outer rows of piles by a distance of one-half the typical pile spacing.

5-2.2.2.2.2.2 **Depth**. For the depth of block, assume the block bottom is above the pile tips by a distance of one-half the typical pile spacing. Where spacings are different in each direction, use the larger of the spacings.

5-3 HYDROSTATIC PRESSURE

5-3.1 **Weight of Water**. In computing pressures, use 1025 kg/m^3 (64 lb/ft^3) for seawater and 1002 kg/m^3 (62.5 lb/ft^3) for fresh water.

5-3.2 **Buoyancy Computations**. Make all buoyancy computations for three water levels, as follows:

5-3.2.1 **Extreme high water**. To check safety against uplift with the maximum (15 degrees) earth wedge mobilized.

5-3.2.2 **Mean high water**. To check safety against uplift with the minimum earth block and friction mobilized. Refer to section. 5-2 for dead loads and section 5-4 for earth pressure.

5-3.2.3 **Extreme low water**. With a ship in dock to determine maximum downward load on foundation soil or piles.

5-4 EARTH PRESSURE

5-4.1 **Variations**. Acting against a dock structure, the resultant outside earth pressure will vary considerably according to pressure and weight conditions inside the dock. Resultant earth pressures will be different when a dock is full of water, when a dock is dry but contains a vessel, and when a dock is empty. See DM-7.02 *Foundations and Earth Structures* for determination of earth pressures.

5-4.2 **Water or Ship in Dock**. Active pressure is to be used because the rotation of the wall with respect to the floor is negligible. Do not use surcharge for computing pressure on drydock walls except where railroad rails on ballast are near the wall.

5-4.3 **Dock Empty**. Assume partial passive pressure to be operative where there is structural continuity at the juncture between sidewalls and floor because, with the dock empty, sidewalls of full hydrostatic docks have a tendency to rotate outward against the backfill. The amount of passive resistance shall be determined by assuming a uniform increase in resistance to occur throughout the sidewall height, starting from zero value at the top to an ascertained maximum bottom value. The rate of increase is based on the condition that the total internal work of the bending stresses throughout the dock cross section has a minimum value.

5-4.3.1 **Inconsistency in Partial Passive Pressure Assumption**. The earth pressure at floor level should be no greater than active pressure, because the horizontal displacement of sidewalls is zero at about floor level, which is the approximate center of rotation for the sidewalls. Nevertheless, the method of approximating the total passive resistance for the condition of dock empty, as described previously, has proved satisfactory for existing structures so designed.

5-4.3.2 **Upward Pressure**

5-4.3.2.1 **Full Hydrostatic Dock**. The distribution of upward pressure beneath a dock designed to resist full hydrostatic pressure is known when the dock is empty, because the dock weight is nearly equal to total buoyancy.

5-4.3.2.2 **Relieved Floors**. For relieved floors, earth pressures are not uniform because they are dependent on slab deflections induced by concentrated ship loads and moments at the wall bases. For the solution of elastic foundation problems and associated soil pressures, see DM-7.02 *Foundations and Earth Structures*.

5-4.3.2.3 **Friction on Sides**. In addition to the dock deadweight, friction piles, and earth weight over projections, the frictional resistance between backfill and sidewalls also is effective in preventing uplift.

5-4.3.2.3.1 **Mean High Water**. To determine the frictional resistance for an empty dock at mean high water, the lateral force acting against the sidewalls (that is, the force corresponding to the active pressure of submerged earth) is multiplied by the coefficient of friction for the earth material on the sidewall material.

5-4.3.2.3.2 **Extreme High Water**. Stability against uplift at extreme high water is computed using a deadweight of the earth wedges as described in section 5-2, instead of frictional resistance.

5-5 **LIVE LOADS**. For design purposes, conditions comprising live loads are:

- **Shiploads** applied to dock floors through blocking.
- **Wheel loads** from crane wheels, railroad tracks, and trucks applied to local beam and slab supports.
- **Local static and moving loads** on roofs and floors or pumpwells.
- **Railroad track loadings**, as a surcharge of earth pressure, from tracks carried on ties and ballast adjacent to sidewalls of docks and walls of pumpwells.
- **An impact allowance** of 15 percent is made for moving loads for structural members forming the primary support for the moving loads.

5-5.1 **Shiploads**. Determine shiploads on the floor for the specific class ship. Figures 5-1 and 5-2 indicate shiploads that have been used for four basic types of ships. Note the extra heavy loads at the stern overhangs. Nuclear powered ships have extra heavy loads under the reactor.

5-5.1.1 **Thin Floors**. For thin floors, investigate the effect of these extra heavy loads, and reinforce the floor locally as necessary.

5-5.1.2 **Positioning**. Base the blocking arrangement for design of the floor on any likely positioning of ships in the dock. Larger ships may be docked only on the centerline of the graving dock. For docks wide enough to permit multiple docking of ships abreast, or long enough to permit various placement fore and aft, apply the load pattern for such smaller ships multiple docked in odd positions to the floor as well as the load pattern of larger ships docked on the centerline.

5-5.2 **Wheel Loads**. The typical wheel loadings for a 36287 kg (40-ton) locomotive crane, and 22680 kg (25-ton), 31750 kg (35-ton), and 45359 kg (50-ton) portal cranes are given in MIL-HDBK-1025/1 *Piers and Wharves*.

5-5.2.1 **Full Hydrostatic Graving Docks**. Crane wheel loads do not normally influence the design of the main wall of graving docks designed to resist full hydrostatic pressure, because of the extensive longitudinal distribution of the wheel loads by the walls. Wheel loads from cranes operating around full hydrostatic graving docks, therefore, usually are significant only in the design of local beam supports under rails crossing the overhead of service tunnels, pumpwells, and other auxiliary structures.

5-5.2.2 **Relieved and Partially Relieved Graving Docks**. For relieved and partially relieved graving docks, crane wheel load may influence the design of main dock walls as well as the design of local beam supports.

5-5.2.3 **Mobile Crane Loads**. Mobile cranes are to some extent replacing locomotive cranes. Use truck crane wheel loads as given in MIL-HDBK-1025/1 *Piers and Wharves* or the crane manufacturers wheel load specifications (covering many of the larger ~ 220-Ton mobile cranes used by PWCs/Shipyards/Private Contractors) for beams, slabs, and the overhead structure of the pumpwell, where crane track loading does not govern.

Fig. 5-1 Ship Blocking Loads

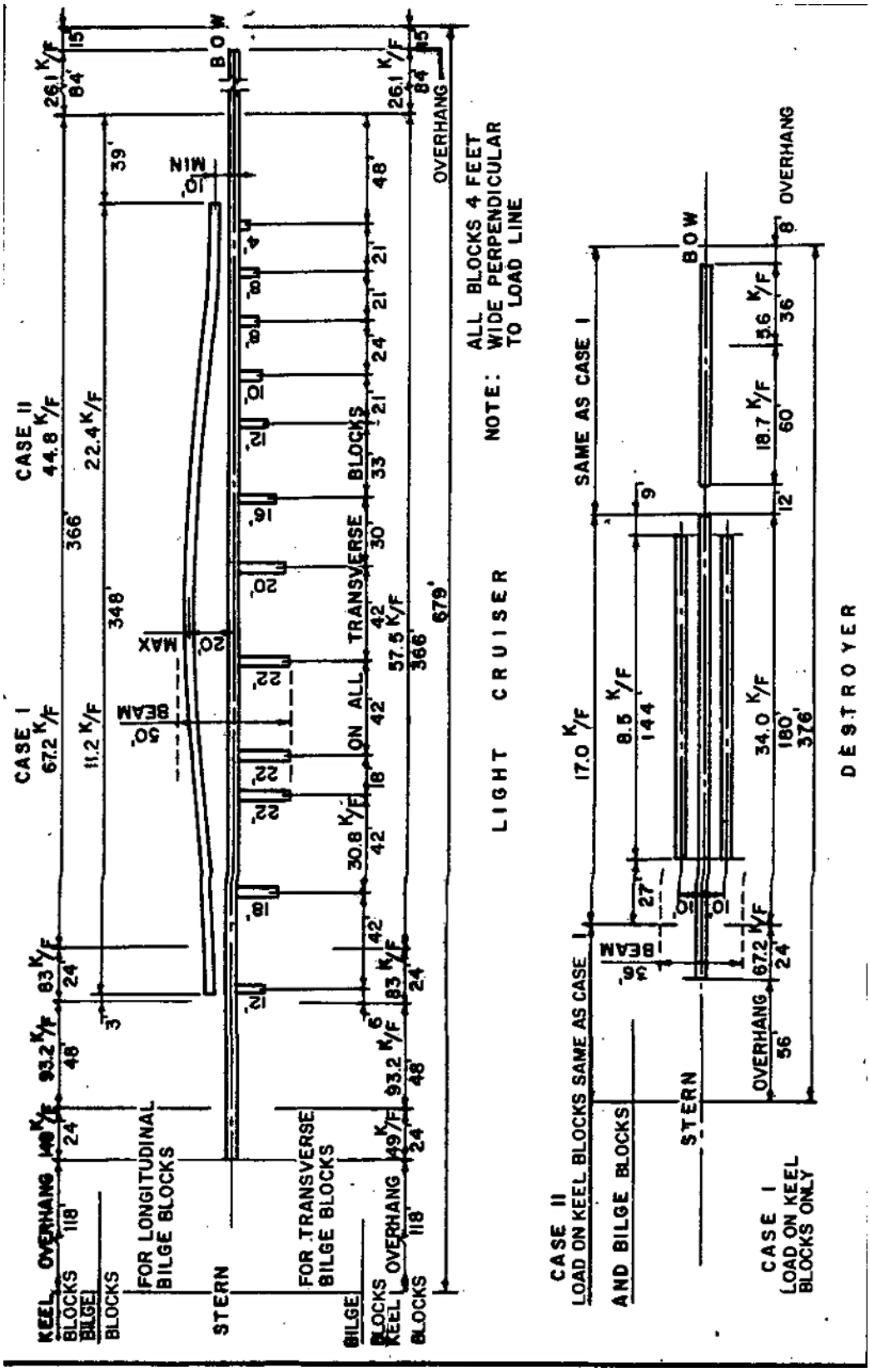

Fig. 5-2 Ship Blocking Loads

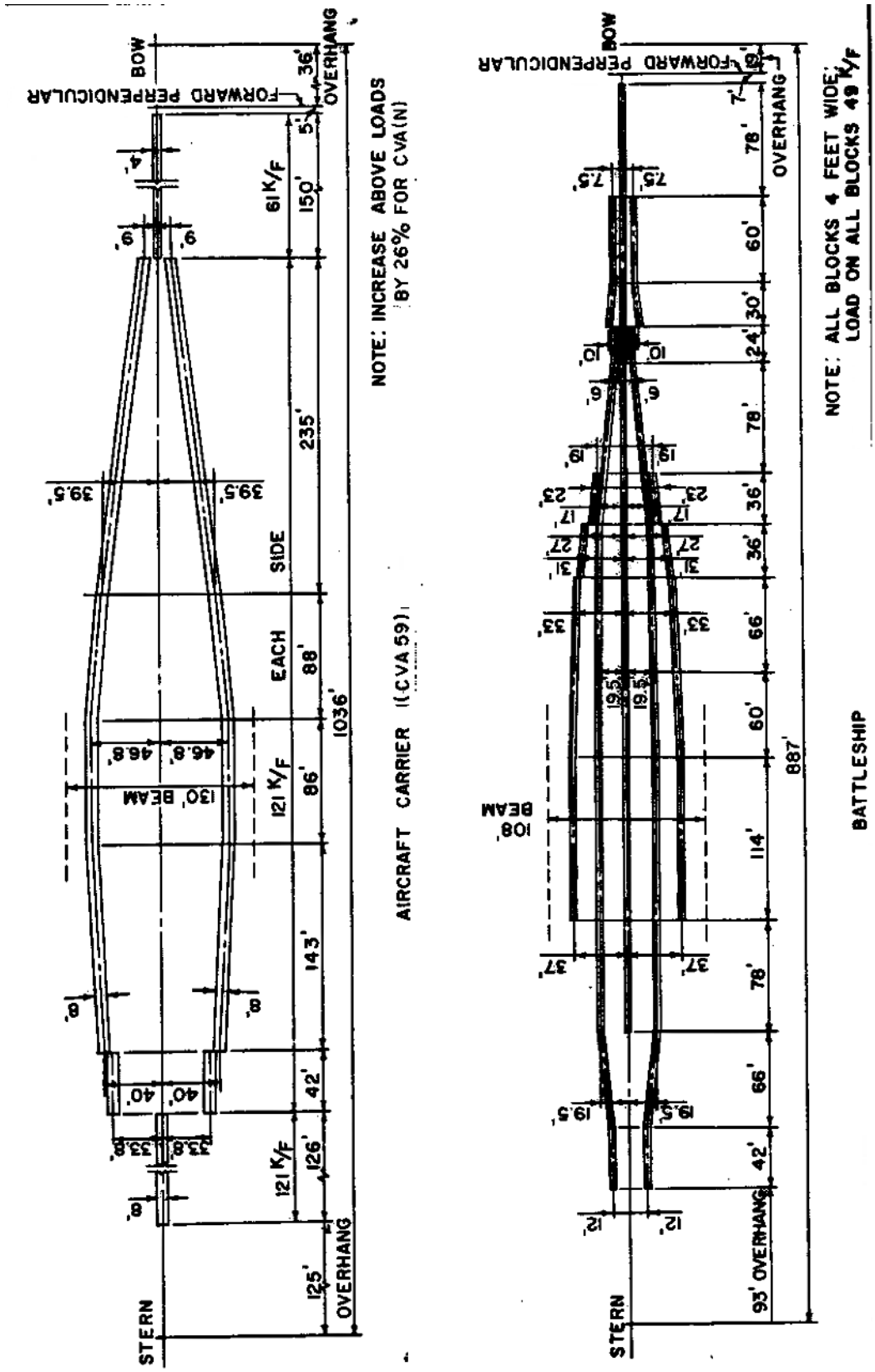

5-5.3 **Loads on Pumpwell Overhead and Floors**. Pumpwell overhead should be designed for a uniform load of 2929 kg/m^2 (600 lb/ft^2) and for truck crane wheel loading when it is at ground level. The critical load for floors supporting main pumps usually corresponds to the maximum upward pressure. Use a uniform load of 1464 kg/m^2 (300 lb/ft^2) for floors not subject to upward hydrostatic pressure; also these floors are to sustain loads from operating machinery placed thereon either in a permanent operating position or in a temporary overhaul position. Include vibrations induced by reciprocating and rotating equipment in the design.

5-5.4 **Earthquake Forces**. In regions of earthquake probability use design criteria contained in MIL-HDBK 1025/1 *Piers and Wharves*. A drydocking facility is a major capital investment and, therefore, the structural system will be subject to a rigorous dynamic analysis of seismic probability effects in accordance with well-established principles of mechanics. Design the drydock to resist the forces of two-thirds of the site adjusted Maximum Considered Earthquake (MCE). The MCE is an earthquake with an acceleration equivalent to an earthquake having a 2 percent probability of exceedance in 50 years. Site adjustments are based on the characteristics of the soil underlying the site. Design lateral acceleration should be at least 0.12g.

5-5.5 **Bomb and Blast Resistance**. Drydocks are not usually designed to resist bombing or blast effects because of the massive size of the structure involved. In some locations, consideration should be given to protective construction for the upper part of the pumpwell and the service tunnels. Additional guidance for Anti-terrorism/Force Protection is contained in MIL-HDBK 1025/1 *Piers and Wharves*.

5-6 SPECIAL CONDITIONS OF LOADING

5-6.1 **Full Hydrostatic Drydocks**. Although there are many special loading conditions to be considered in the design of a graving dock (for example, nonsymmetrical loads, wave action on exposed walls, earthquake, and unusual water differentials), the design of full hydrostatic pressure docks generally is concerned with four especially critical conditions.

- **Case I**. Dock under construction.
- **Case II**. Dock empty. Maximum hydrostatic uplift.
- **Case III**. Maximum ship load. Minimum hydrostatic uplift.
- **Case IV**. Dock full of water.

For application of these loadings, refer to *American Civil Engineering Practice, Volume II*.

5-6.2 **Partially and Fully Relieved Drydocks**. Critical conditions for partially and fully relieved designs are similar to those for full hydrostatic drydocks, except for

appropriate allowance for decreased upward and lateral water pressures in accordance with the degree of lowering of hydraulic gradients.

5-6.3 **Drydocks Built by Underwater Methods**. When completed, these drydocks are always of the full hydrostatic type. In some cases, however, this method of construction involves loadings not encountered with construction in the dry. These cases occur when walls are built entirely in the dry in cofferdams set on slabs previously constructed underwater. Under these conditions, when wall cofferdams are unwatered, the partially completed structure does not have the benefits of wall and finish floor slab weight to overcome the buoyancy of the cofferdams, or the full sidewall thrust to overcome the tension in the slab. For examples of two such conditions, see Figure 5-3.

These drydocks are frequently associated with the use of holddown piles, necessary if the weight of the floor slab is insufficient to overcome the total buoyancy including that of the empty cofferdam or cofferdams. Note in (a) of Figure 5-3 there is a tendency to develop tension in the slab bottom without benefit of axial compression from a sidewall thrust. In (b) of Figure 5-3, there is a tendency to develop tension in the slab top with a side thrust that is much smaller than will be developed against the walls of the completed dock.

5-7 **MATERIALS AND DESIGN**. This section contains special provisions applying to concrete for drydock walls, floors, and general cross section.

5-7.1 **Concrete**

5-7.1.1 **Classes of Concrete**. Recommend using concrete as specified in UFGS 03311 *Marine Concrete*. Use minimum 24,132 kPa (3,500 psi) estimated 28 days compressive strength cast in place concrete for the main body of the dock. Classes of greater strength may be used in accordance with structural requirements. Do not specify mortar intrusion concrete (see Glossary) for permanent drydocks.

5-7.1.2 **Admixtures**. Admixtures may be used to produce air entrainment, higher strength, greater durability and better workability, up to maximum percentages detailed in the project specifications.

Fig. 5-3 Examples of Drydocks with Slabs Constructed Underwater and Walls and Finish Floor Constructed in Dry

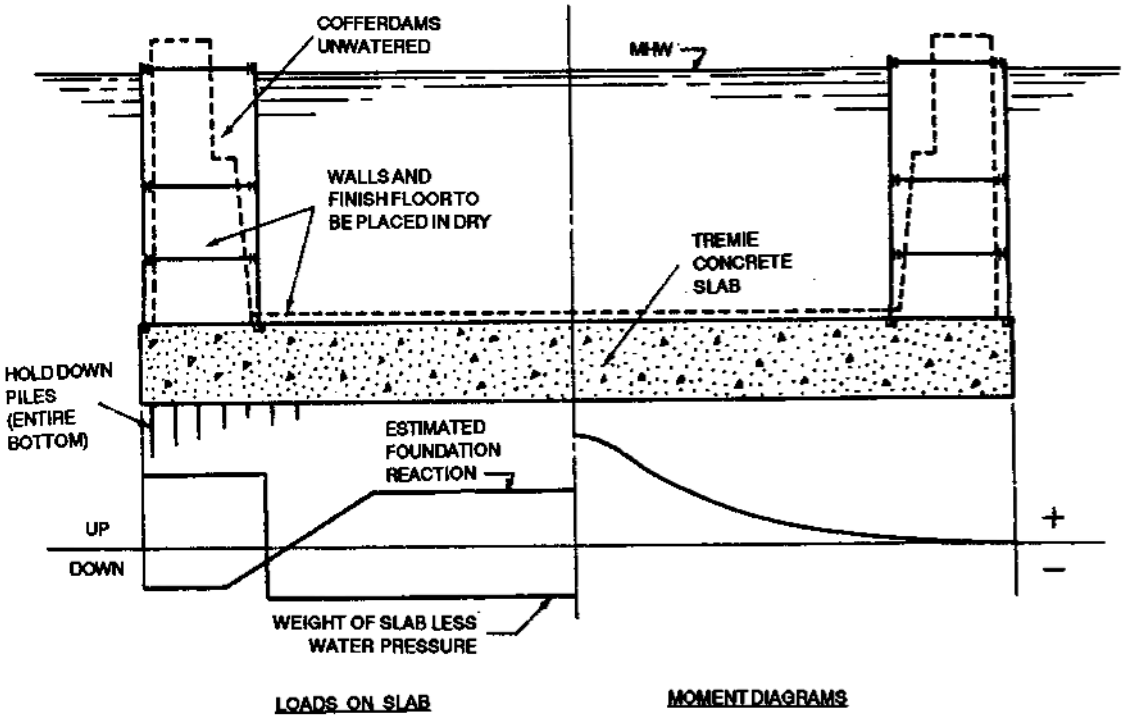

EXAMPLE (a)

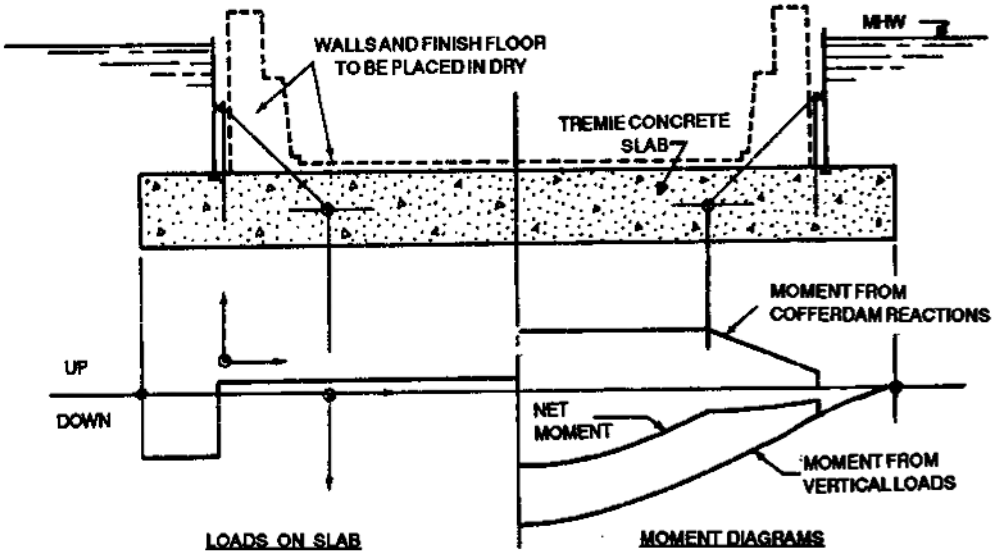

EXAMPLE (b)

5-7.2 **Reinforcing Steel**

5-7.2.1 **Cover**. Minimum concrete protection for reinforcement is as follows:

- 152.4 mm (6 in) where face of concrete will be in contact with soil.
- 76.2 mm (3 in) for formed or finished surfaces not in contact with soil.
- 50.8 mm (2 in) over bearing pile tops.
- At piles intended as holddowns, and having a considerable length of embedment in the concrete, place the reinforcement as in the first bullet above.

5-7.2.2 **Reinforcing Bars**. Reinforcement should have a minimum yield strength of 275,790 kPa (40,000 psi), and conform to ASTM Specification A 615*, Deformed and Plain Billet-Steel Bars for Concrete Reinforcement*, Grade 40. High strength, or special large size reinforcement should conform to Grades 60 and 75. Consider use of epoxy coated, stainless steel, cladded stainless steel, or galvanized reinforcement.

5-7.3 **Foundations**. Evaluate safe soil bearing capacity by methods set forth in DM-7.01 *Soil Mechanics* and DM 7.02 *Foundations and Earth Structures*. Where the safe capacity of the soil is exceeded, provide structural support. Types of structural supports applicable to the foundation of drydock proper and to supplemental structures are: timber piles, concrete piles, steel H-piles, pipe piles with open or closed ends, and caissons. For pile capacities, analytical treatment, information on range of capacities for various types of piles, and capacity of caissons, refer to DM-7.02 *Foundations and Earth Structures*.

5-7.4 **Design**

5-7.4.1 **Load and Strength Reduction Factors**. In design of reinforced concrete structures, proportion members for adequate strength in accordance with provisions of the latest edition of ACI 318, *Building Code Requirements for Reinforced Concrete*, using load factors and strength reduction factors (phi) specified.

5-7.4.2 **Service Load Stresses**. Alternatively, nonprestressed reinforced concrete members may be designed using service loads and permissible service load stresses in accordance with provisions of ACI 318, *Appendix B, Alternative Design Methods*.

5-7.4.3 **Buoyant Condition Increases**. For a buoyant condition of a continuous U cross section, which might be produced in a relieved or partially relieved dock resulting from failure of the pressure relief system, or for construction stages, the ordinary working design criteria may be increased 50 percent.

5-8 **METHODS OF ANALYSIS**

5-8.1 **Full Hydrostatic**. For analysis of four basic conditions of loading, refer to *American Civil Engineering Practice, Volume II*.

5-8.2 **Fully or Partially Relieved**. Where these drydocks have relatively thin floors, concentrated ship blocking loads and wall reaction produce deflections resulting in variations in foundation pressures and requiring methods of elastic foundation analysis. The problem is to be treated as two-dimensional. For typical methods of solution, refer to DM-7.02 *Foundations and Earth Structures*. The elastic foundation method may be used to assist in estimating foundation pressures for the special loading conditions discussed in section 5-6.

5-8.3 **Computer Analysis**. The Naval Facilities Engineering Service Center has a three-dimensional computer program for analyzing or designing drydocks.

5-9 SAFETY CONSIDERATIONS

5-9.1 **Basic Safety Standards**. For general safety standards see OSHA Part 1915, *Occupational Safety and Health Standards for Shipyard Employment.*

5-9.2 **Safety Features Peculiar to Drydocks**. Observe the safety features described in sections 5-9.2.1 through 5-9.2.7.

5-9.2.1 **Coping Railing**. It is necessary for coping railings to be removable to avoid fouling lines when docking and undocking ships. The removal and replacement must be accomplished with as little hazard as possible, because of the seriousness of the accident should a person fall into an empty dock. Chain rail with removable stanchions is often used, but maintaining adequate chain tension is a common problem. Solid metal pipe or fiberglass railing, provided in 1.8-3.0 m (6-10 ft) sections for ease of removal/reinstallation, is preferred.

5-9.2.2 **Stairways**. Use open mesh treads on all framed stairways. Use non-slip treads for concrete stairways. Provide closing chains at top of steep, infrequently used stairways. Preferably, stairways should have pipe handrails. Chain and stanchion handrails may be used as an alternate.

5-9.2.3 **Toe Guards**. Provide toe guards at all handrails wherever possible. At the coping edge, a curb may serve as a toe guard.

5-9.2.4 **Obstructions to Mooring Lines**. Keep the top of coping clear between the edge of the coping and the line of capstans and bollards, except for luffing and fairing line handling fittings.

5-9.2.5 **Stepdowns in Tunnels and Culverts**. Avoid unprotected stepdowns in all unlighted tunnels and culverts. Use guardrails, or an arrangement of rails and gratings, to protect personnel while still retaining the water carrying capabilities of the tunnel or culvert.

5-9.2.6 **Spillways**. Provide ladder rungs or handrails, depending on steepness, up flooding and discharge spillways, to aid in access for inspection of sluice gates and stoplogs.

5-9.2.7 **Dock Floor Irregularities**. Graving dock floors should present an unbroken surface. Cover drainage conduits with gratings that do not protrude above the floor level. Run service pipes near the sidewalls and bridge them at stairways. Floor finish should be on a true plane and sufficiently rough to prevent slipping, but not so rough as to injure blocks.

5-9.2.8 **Painting**. Paint obstructions with a striped pattern composed on contrasting colors as outlined in UFGS 09900N. *Paints and Coatings*.

- Service pipes are customarily painted according to established color codes, but those below headroom or otherwise forming obstructions should be painted with contrasting colors in stripes.

- Channel pedestrian traffic through safety zones by marking the borders of pedestrian passageways with traffic zone paint.

CHAPTER 6

FLOODING

6-1 **DESIGN FACTORS**. This chapter contains criteria and information on flooding of drydocks, particularly methods of flooding and the design of hydraulic structures.

6-1.1 **Requirements**. Flooding of drydocks is done entirely by gravity; superflooding feature installations require a pumping system to raise the inside water levels to higher elevations. Design and arrange all flooding systems to operate with a minimum of disturbance to ship blocking, no intake of silt or floating objects, a minimum of required special gate control, and no vacuum or cavitation effects in the water channels. Gates and gate operating mechanisms must be reliable and durable.

6-1.2 **Flooding Periods**. Subject to some variations resulting from peculiarities of a given flooding system, the times for flooding the docks should be, for the main classifications:

- Submarine and destroyer docks, 45 minutes.
- Cruiser docks, 60 minutes.
- Carrier and Auxiliary docks, 90 minutes.

6-2 **FLOODING METHODS**. There are three general methods used for admitting water into drydock chambers:

- from flooding intakes on one or both sides of the entrance through culverts built into the lower parts of sidewalls and connected to floor openings spaced along a dock length,
- from flooding intakes on one or both sides of the entrance through culverts passing transversely under the floor near the entrance with openings leading upward into the floor, or
- through ducts in an entrance closure caisson or gate.

Either of the first two systems may be built into both sides of docks. They have several features in common at intake portions.

6-2.1 **Common Intake Features**. Except under special conditions, place one intake opening on each side of an entrance. For very large docks requiring large culverts, two openings on each side may be used to reduce sluice gate sizes.

6-2.1.1 **Opening Edges**. Opening edges should be rounded to reduce eddying and contraction of the stream.

6-2.1.2 **Opening Elevations**. No standardization can be established for opening elevations since these depend on tidal ranges, stem rises of gate valves, and proximity and character of entrance approach bottoms. In general, depths below mean low water, where opening soffits are placed, should not be less than opening heights, and in no case so high that the rising stems of sluice gates project above the coping. When an entrance approach bottom is near the invert or openings, protect the bottom area in front of and adjacent to the openings from erosion by heavy rip-rap or other means.

6-2.1.3 **Trash Racks**. Place trash racks over openings to prevent intake of solid matter. Trash racks must be removable for maintenance and replacement. For trash rack design, refer to MIL-HDBK-1005/7 *Water Supply Systems*.

6-2.1.4 **Stop Logs**. Between trash racks and sluice gates, provide vertical slots in culvert sides to accommodate stop logs furnished to shut off the water for sluice gate maintenance.

6-2.1.5 **Sluice Gates**. Control graving dock flooding with sluice gates. Provide two sluice gates per flooding opening to assure “double valve protection” against inadvertent flooding.

6-2.1.5.1 **Minimum Design**. When under heavy hydrostatic pressures occurring during high tide levels with wave action, design must be adequate to prevent operating and maintenance troubles caused by distortion, warping, and excessive friction.

6-2.1.5.2 **Maximum Design**. Design maximum sluice gate sizes to allow flooding a dock within the specified time.

6-2.1.5.3 **Design for Two-Way Pressure**. When sluice gates are subjected to two-way pressure, they must be specifically designed for such service.

6-2.1.5.4 **Specific Requirements**:

- Limit the largest dimension to 2.44 m (96 in.)
- Use motor operated, reversible, rising stem type gates. Operate motors by 3-phase, 60 Hertz current in the 440-volt to 460-volt range.
- Provide local mechanical gate position indicators at gate stands, and remote electrically operated indicators at pumpwell control boards.
- Design structural supports for gate lifting mechanisms to carry a load two times the manufacturer rated lifting force.
- Suitable cast iron thimbles must be embedded in concrete for attachment of sluice gate frames.
- Use cast iron frames and covers. Use stainless steel metals (31OSS - 316SS) for stems and stem couplings. Use bronze for the thrust nuts and

fasteners. For all wedges and seating surfaces where sliding occurs, the use of a metal sliding against a metal of the same alloy composition may create galling problems. Use metals of different alloy composition or the same metals with different hardnesses and anchor these seating surfaces with dovetail grooves. For specific wearing problems, consult a metallurgist.

6-2.1.6 **Draft Gages**. Provide dock water level indicators as follows:

- On each side of drydock walls near the entrance and also on each side of dock walls near the head end. The indicators must be clearly visible from the opposite side at the top of a drydock.
- Mark gages with numerals 152.4 mm (6 in) high, with the bottoms of numerals corresponding to multiples of one foot of draft.
- The gages may be cast as recesses in wall concrete and painted, colored tile cemented into a wall, or noncorrosive metal anchored into the concrete.

6-2.1.7 **Vents**. Vents must be provided behind each gate, leading from water duct soffits to the free atmosphere on the coping where the vent openings shall be covered by grating. A vent must be located at the highest point of a soffit before it curves down into the flooding culverts proper.

6-2.2 **Flooding Culverts**. One of the two following types of culverts may be used to conduct flooding water from entrance works into a drydock chamber.

6-2.2.1 **Sidewall Type**. Sidewall culverts are located in the lower parts of sidewalls, connected to the sea through the entrance works. Floor openings and one or two large sidewall openings are connected to them.

6-2.2.1.1 **Advantages**. This arrangement achieves filling without dangerous currents. A flooding culvert often serves in part as a drainage and/or dewatering culvert. The use of floor openings for filling provides a blanket of water to cushion the force of water from the outlets and also flushes the floor drains.

6-2.2.1.2 **Flooding Design**. In a flooding culvert, maximum velocity occurs during early flooding stages and is gradually reduced by loss of head resulting from the rising water level inside a dock. The flooding time is greatly affected by the flow rate at reduced heads when a dock is nearly full. Therefore, large culverts and openings are desirable.

6-2.2.1.3 **Reduction of Obstructions**. It is important to reduce friction, eddy currents, and turbulence, by making interior surfaces of culverts smooth and all changes of direction by means of gradual curves.

6-2.2.1.4 **Tunnels**. This system is good if hydraulic requirements do not result in tunnels of such size as to produce complex and high stress concentrations in the walls. This is especially true of thin walls with stressed reinforcing steel and less true in gravity walls. Even for the latter case, formwork is expensive. Long stretches of tunnel increase cleaning and maintenance work.

6-2.2.2 **Transverse Floor Type**. Transverse floor culverts comprise a number of openings, spaced across a dock floor above a wide culvert located parallel to, and from 3.05 to 5.5 m (10 to 18 ft) inboard of, the inner caisson seat; the inboard distance depending on the dock size. The culvert ends rise in the sidewalls and terminate in the entrance works.

6-2.2.2.1 **Flooding Factor**. In operation, the method of flooding through openings of transverse culverts necessitates partial opening of the sluice gates for a sufficient time to attain adequate water depth on the floor, so the flow velocity toward the head end will not dislodge or damage the blocking.

6-2.2.2.2 **Cost Factor**. A properly designed system of this type will comply with specified flooding times at lesser cost than the system of flooding through sidewall culverts.

6-2.3 **Flooding Through the Caisson**. Drydocks can be flooded through ducts in an entrance closure caisson or gate. This method for flooding the drydock can be used exclusively, or it can be used in combination with flooding intakes in the dock walls. This is usually the most cost effective method of flooding the drydock for both initial construction costs and O&M costs.

For this method of drydock flooding, multiple round tubes or ducts penetrate the caisson shell plating through the caisson ballast tank. Tube diameter is normally 762 mm (30 in,) and should not be larger than 914.4 mm (36 in.) The number of flooding tubes is dictated by the desired flooding time and hydraulic characteristics. However, utilize at least two flooding tubes for redundancy if the dock is to be flooded exclusively through the caisson. Each flooding tube must have two valves installed in series to provide “double valve protection” against inadvertent flooding. Additional requirements are contained in Chapter 9.

6-2.4 **Superflooding**. Increased ship docking capability may be obtained by installing a superflooding system that lifts ships by flotation from one level to another within a drydock, similar to that of a canal lock. The operation consists of off-center vessel entry into the dock chamber, placing entrance caisson in seat, pumping water into the dock chamber thus raising the ship, breasting the ship over preset keel blocks, and then dewatering the dock chamber.

The installation requires a special pumping capability to raise the water level in the dock chamber above the level attained from normal flooding. It also requires an inboard- and outboard-faced caisson seat, and securing devices for the entrance closure to resist hydrostatic pressures caused by the raised interior water level. A superflooding system has been used in several graving drydocks with inadequate water

depth to enable them to drydock sonar equipped ships and ships of newer deep draft design. Refer to ASCE *Journal of the Waterways and Harbors Division*.

6-3 HYDRAULIC DESIGN

6-3.1 **Overall Factors**. In hydraulic design of flooding systems, consider the factors of waterheads, required flooding times, optimum configuration of culverts, permissible flow velocities, and limiting sizes of sluice gates.

6-3.1.1 **Heads**. Hydrostatic head causing flow varies from a maximum when a dock chamber is empty, to zero when a dock chamber is full. Mean high water (MHW) or mean higher high water (MHHW) is used as the reference elevation for determining maximum head.

6-3.1.2 **Required Flooding Time**. Refer to section 6-1.

6-3.1.3 **Flow Velocities**. The maximum desired flooding flow velocity should be 7.62 m/s (25 ft/s). This velocity may not conform to an available head that could produce higher velocities. In such cases, either provide built-in head losses in the system or reduce the intake area by sluice gate throttling.

6-3.2 **Evaluation of Flooding Time**. The many factors affecting flow in flooding systems make it practically impossible to compute accurately the time required for the flooding. Such factors include:

- Variations in Hydrostatic Head. These conditions exist because of water rise in the dock, and the difference in actual tidal conditions from those assumed in the design.
- Transitions in culvert cross sections in many cases are necessarily abrupt; for example, at dock floor openings.
- Changes in elevation and direction of the main culvert alignment.
- Head losses in trash racks and gratings.
- Roughness condition of culvert walls.
- Entrance and discharge head losses.
- Size of ship in dock.

6-3.3 **Computation of Flooding Time**. Because of the difficulty in combining the various factors influencing flow, the entire system is treated as an entity with a single overall flooding coefficient applied in the basic formula Equation 1.

EQUATION: $Q = Ca\sqrt{(2gh)}^{0.5}$ (1)

where: Q = flooding rate (cfs)

C = overall flooding coefficient (dimensionless)
a = cross section area of main culvert (sq ft)
g = acceleration of gravity (fps/s)
h = difference in elevation between water in drydock and outside water (ft)

To determine the relationship between a varying head, as the water rises in the drydock, and an interval of elapsed time, take the expression in Equation 2:

EQUATION: $Q/A = -dh/dt$, fps (2)

where: A = average plan area of the water pond in a drydock (sq ft)

Then substituting the value of Q from Equation 1:

EQUATION: $dt = -A/Ca \times dh/\sqrt{(2gh)}^{0.5}$ (3)

Or for definite time intervals (integrating Equation 3 between limits h_2 and h_1)

EQUATION: $t_2 - t_1 = 2A((\sqrt{h_1}) - (\sqrt{h_2})) / Ca\sqrt{(2g)}$ seconds (4)

For total time T, where the original difference in water levels was H:

EQUATION: $T = 2A\sqrt{(H)} / Ca\sqrt{(2g)}$ seconds (5)

The value of C may be obtained from tests on drydocks or other structures such as ship locks with comparable flooding systems. For proposed flooding systems of unusual character, or for drydocks of unprecedented size, model tests should be considered.

CHAPTER 7

DEWATERING

7-1 **DEWATERING SYSTEMS**. This section deals with criteria, data, and information on dewatering, with particular attention to basic components, basic requirements, and pumping systems.

7-1.1 **Requirements.** Graving docks have two dewatering systems. In both systems a large portion of the water is drained directly through a collector channel.

7-1.1.1 **Secondary System**. A secondary system collects the last few millimeters (inches) of water blanketing the graving dock floor, as well as rainwater, flushing water, and steam condensate. This system has sloping longitudinal floor drain culverts near the sidewalls that lead to collector channels at pumpwells. The culverts may have rectangular cross sectional areas of several square feet. They are covered by securely anchored strong gratings.

7-1.1.2 **Alternate System**. As an alternative to relatively large floor culverts of the above secondary systems, use a wall culvert to carry off the main discharge. Floor culverts are then made smaller and are connected to wall culverts at intervals through floor openings. Connect wall culverts to the collector channel or directly to the main pump suction chamber.

7-1.1.3 **Environmental Systems**. Environmental requirements in most locations now require that potentially contaminated water be treated prior to discharge. If potentially contaminated and uncontaminated waters are allowed to mix, the mixture must be handled as contaminated water. For this reason, it is usually necessary to segregate potentially contaminated water sources in the drydock from uncontaminated sources that can be pumped directly into the harbor. Potentially contaminated sources can include water that contacts the drydock floor where industrial activities are occurring. Uncontaminated sources include water pumped from the drydock during docking/undocking operations, water that leaks past the caisson seat, ship's cooling water, and water that leaks through dock walls or enters the dock through pressure relief pipes.

Design environmental systems so that system failure does not result in flooding of the drydock floor. Environmental systems should overflow into the normal floor drainage system before the water reaches drydock floor level.

Environmental system requirements vary by location and can be subjective. For this reason it is critical that environmental system planning and design be closely coordinated with the regulatory authority to ensure compliance with environmental requirements.

7-2 **DEWATERING SYSTEM COMPONENTS**

7-2.1 **Collector Channel**. The collector channel, a wide, deep, grating covered open culvert leading to the pump suction chamber, handles the greater portion of water pumped out of the flooded graving dock.

7-2.2 **Sand Sumps**. Abrasive materials harmful to pumps and pump fittings are continuously washed off a graving dock floor in sufficient quantities to justify the installation of a settling basin. Provide settling basins to retain most of these harmful suspended particles. Locate these basins in an accessible part of the collector channel to permit easy removal of collected sediment and sand. Other methods of containing this material may be used as an alternate, such as floor barriers around the ship.

7-2.3 **Dewatering Pump Suction Chamber**. Provide a suction chamber (large enclosed space) for the dewatering pumps next to or in dock sidewalls, preferably near the dock entrance. Specific design requirements are:

- Locate the chamber floor below the graving dock floor; shape it to conform to flow lines of water entering pump suction bells, if necessary.
- Provide depressions in chamber floor to serve as sumps for low capacity drainage pumps.
- Provide access to the main suction chamber through manholes or through the collector channel itself.

7-2.4 **Pumping Plant**. Provide a pumpwell of reinforced concrete for housing the pumps, motors, valves, gates, controls, and other equipment. Pump suction chambers constitute the lower part of a pumpwell.

7-2.4.1 **Pumps and Motors**. Several functional types of pumps with motors may be housed in a pumpwell; main dewatering units predominate. Other pump and motor units are:

- Drainage pumps.
- Sump pumps.
- Sewage pumps.
- Salt water pumps (fire protection and flushing).
- Vacuum pumps (if required for priming).

7-2.4.2 **Valves and Gates**. Include the following valves and sluice gates in a pumping plant:

- Sluice gates between collector channel and main pump intakes.
- Gate valves in discharge line from each main pump.

- Check valves in discharge line from each main pump.
- Miscellaneous valves for operation of secondary functional pumps.

7-2.4.3 **Double Valve Protection**. Drydocks must be protected from sources of potential flooding, such as flooding inlets, from an adjacent dock through dewatering systems or backflow through pumps, by two methods of protection. Combinations of valves, sluice gates and stoplogs may be used.

7-2.4.4 **Motor Controls and Recording Devices**. Mount these devices on a single control panel at or near the motor room.

7-2.4.5 **Toilet**. Provide at least one water closet near the motor room.

7-2.4.6 **Heating and Ventilating**. Refer to MIL-HDBK-1003/3 *Heating, Ventilating, Air Conditioning, and Dehumidifying Systems* for heating and ventilating criteria for pumping stations.

7-2.5 **Pump Discharge Tunnel**. Design the pump discharge tunnel in the form of a variable section header, or header tunnel, connecting the various pump discharge lines to carry water into the discharge tunnel outer portions. Separate the pump discharge tunnel from the flooding system.

7-2.5.1 **Auxiliaries**. Install gate valves and check valves in all pump discharge lines, except in unusual cases where discharge is above high water.

7-2.5.2 **Discharge Stop Log**. Provide a stop log or hinged stoplog in the discharge tunnel to allow inspection and maintenance of discharge valves.

7-2.6 **Gratings**. Gratings must have small openings to prevent small tools and other objects from going through the pumps. During work around a docked vessel, some dock floor drainage grates may be temporarily removed. As an added precaution to prevent damage to the pumps, it may be advisable to place a grating over pump suction boots or bells.

7-2.7 **Salt Water Intake Screen**. Where salt water is to be pumped for fire protection or other purposes, provide a screen at the intake to catch solids of sizes that would interfere with pump operation. If large quantities of salt water are to be handled, moving mechanical screens may be required. Refer to MIL-HDBK-1005/7 *Water Supply Systems* for screen design.

7-2.8 **High Water Sensing Systems**. Provide two independent water level sensing systems. The primary sensing system, which must operate from station power, shall be designed to activate both the pumps and the alarm. A backup or secondary sensing system must have an independent power source and operate the alarm only. Both systems must announce locally and at a central location that is continuously manned.

7-3 **BASIC REQUIREMENTS OF DESIGN FACTORS**. Three basic design factors enter into the design of a pumping system: (1) desired pumping time, (2) initial cost of pumps, motors, pumpwell structure, and appurtenances, and (3) power supply. Also consider the relatively small percent of time that pumps are in operation.

7-3.1 **Pumping Time**. The average time for dewatering Navy drydocks of the main classifications may be used as a design guide:

- Submarine or destroyer docks, l hour 30 minutes.
- Cruiser docks, 2 hours 20 minutes.
- Carrier and Auxiliary docks, 2 hours 45 minutes.

7-3.2 **Initial Cost of Installation**. For comparative studies, obtain the cost of various sizes of pumps, motors, controls, and other mechanical accessories from manufacturers. The cost of pumpwell and discharge structures increases with the sizes of pumps. This is especially true with regard to pumpwell foundations that are usually the deepest part of the entire drydock foundation and lead to special construction problems.

7-3.3 **Power Considerations**. Dewatering pumps of all naval drydocks should be driven by electric motors. These main pumping units require a considerable amount of electrical energy for brief periods of time and at infrequent intervals. If electrical current is purchased for this purpose, it involves a large demand or service charge. If current is furnished by the station, this results in a relatively heavy station demand, necessitating installation of additional power capacity for generating equipment.

7-3.3.1 **Power Demands**. Keep the maximum power requirements as low as practicable, consistent with the required capacity. Keep power demands as constant as possible through the whole pumping head range. Although the initial cost of high-speed standard motors is relatively low, their operating characteristics are not suitable for driving dewatering pump units. Therefore, the design of the motor driven, direct connected pumping unit for drydocks involves an adjustment and compromise of the conditions of: varying hydraulic head, minimum range of required power, lower unit speeds, and relatively good efficiency. These conditions often necessitate a sacrifice in efficiency. High efficiency, however, is not of prime importance in equipment that is operated so small a percentage of the time.

7-4 **PUMPING SYSTEMS**

7-4.1 **Components**. The main dewatering system of a drydock usually includes:

- The suction inlet located within the dock chamber,
- The suction passage and/or culvert,

- Pump suction chamber,
- Pump suction bells,
- Pumps,
- Discharge check and gate valves,
- Discharge culvert including backwash trash rack, and
- Hinged stop gate, sliding stoplog or discharge sluice gate.

Where pumping plants may be designed to remove water from more than one dock, additional suction sluice gates are required to permit independent pumping of the docks.

Make available an emergency drainage pump, which may be a submersible type, in the event of an emergency or when a drydock must be isolated from its normal drainage method.

7-4.2 **Elevation of Discharge**. The most desirable operational pumping arrangement (especially where tidal range is not great) is a system in which the discharge is directly overboard above high tide, and in which no discharge check and gate valves, trash racks, or stop gates are required. Operation is simplified as there is no large power driven valves with electrical controls to be operated and maintained.

7-4.2.1 **Design**. The design outlined above allows elimination of a large portion of the pumproom substructure, with an accompanying reduction in pumping plant initial cost. This design is not well adapted to a site where extreme high water rises to within less than 1.83 m (6 ft) of the coping level. The additional elevation required in delivering water overboard above high tide increases the total static pumping head. This increase, however, may be more offset by reduction in friction owing to elimination of the pump check and discharge valves.

7-4.3 **Pumping Head**. The pumping head of the main dewatering pumps is the sum of the maximum hydrostatic head and hydraulic system losses. See Figure 7-1. Maximum hydraulic system losses exist when maximum flow occurs, which is the time of minimum static head.

7-4.4 **Pump Suction**. With reference to design and satisfactory functioning, the most critical portion of a hydraulic system is the suction portion extending from dock chamber to dewatering pump suction bell. This portion consists of the suction inlet, suction pit below the inlet, and conduits leading from the pit to individual pumps or to a pump suction chamber common to all pumps, and the pump suction bells. If the conduits are separate for each pump suction, sluice gates may be installed in each conduit to permit working on a pump without impairing the use of other pumps.

7-4.4.1 **Periphery of Pit Opening**. In dewatering a drydock, one or more of the main pumps may be shut down as the water level approaches the dock floor, in order to prevent loss of pump suction. As the water level continues to recede it generally becomes necessary to throttle the discharge of the last operating pump. This condition occurs when the pump capacity exceeds the quantity of water flow reaching the pump suction from the dock chamber through the pump suction pit and conduits. The elevation of the pumps with reference to the dock floor does not contribute to this condition. To delay the time of shutdown and throttling, design the dock floor suction inlet to have as large a perimeter as practicable.

7-4.4.2 **Area of Pit Opening**. The suction pit opening (free area) should be of sufficient size to result in a flow velocity in the range of 1.07 to 1.37 m/s (3-1/2 to 4-1/2 ft/s). Base the flow on the pumping rate when the water level is 0.6 m (2 ft) above the dock floor and discharging against mean high tide. The suction condition may be greatly improved by providing openings on the opposite side of the dock chamber connected by conduits under the dock floor.

7-4.4.3 **Use of Sidewall Culverts**. Where a sidewall culvert drainage system is used to facilitate removal of low-level water from the dock floor, it should drain to and terminate in the main dewatering pump suction chamber.

7-4.4.4 **Shape of Pump Suction Works**. Design the configuration of a pump suction pit and the conduit leading to the pump suction chamber, or suction bell, so that the flow will have a constant or uniformly accelerated velocity. The surface of the passages should be smooth and of such shape as not to produce eddies. There should be no sharp turns or abrupt changes in a conduit section. It may be necessary to install stream guide vanes in the suction chamber to effect good distribution and flow to the pump suction bells.

7-4.4.5 **Arrangement of Suction Bells**

7-4.4.5.1 **Design for Velocity**. Where several pump suction bells draw from a common chamber, the flow in the region of the bellmouth should be free from high velocities and changes in direction that tend to cause vortices.

In addition:

- The velocity of approach should be in the range of 0.61 to 0.91 m/s (2 to 3 ft/s).
- The designed bellmouth velocity should be in the range of 1.22 to 1.52 m/s (4 to 5 ft/s).
- The water depth below the bellmouth should be approximately one-half the bellmouth diameter.
- Laterally there should be no obstruction to flow within one diameter of the centerline of the bell.

7-4.4.5.2 **Design for Vortex Action**. The system design should give such hydraulic characteristics as will preclude vortex action at the suction inlet and at the suction bell.

7-4.5 **Pump Discharge**. The design of the pump discharge line is less critical than that of the suction line. The discharge conduit surfaces should be smooth, and sharp angles that tend to produce eddy currents must be avoided. The conduit should be such that the streams from individual pumps converge in as near a parallel direction as practicable. Changes in conduit sectional areas should be gradual and should not produce fluctuating velocities.

7-4.5.1 **Allowable Velocities in Discharge Works**. At discharge of individual pumps, use 6.1 m/s (20 ft/s) maximum. In cross section of combining discharge culvert, use 4.27 m/s (14 ft/s) maximum.

7-4.5.2 **Head Losses**. Head loss computations exclude losses through the pumping unit. These are included in the manufacturer rating. . Total loss should not exceed 3.05 to 3.66 m (10 to 12 ft.) Suction loss should be not more than 2 to 3 percent of total loss.

7-4.5.3 **Valves**. Where the discharge terminations are submerged, both gate and check valves are required. Where the discharge is above water, only a low resistance discharge flap valve is required. Gate valves should be the outside stem and yoke type suitable for throttling operation, and should be motor driven with push-button control. Check valves should be the low resistance, horizontal, nonslam, or dashpot control type.

7-4.6 **Pump Capacity**. Base the capacity of the main dewatering pumps on the desired dewatering time, volume to be removed, type of graving dock construction, and characteristics of the hydraulic system. As the water level in the dock recedes, the pump discharge volume falls off accordingly. The unit pump rating in gallons per minute should be taken as the average discharge volume. This average is based on the pump discharge when the hydrostatic suction head ranges from that of mean high water down to the head existing when the water level in the dock is 0.6 m (2 ft) above the dock floor.

7-4.7 **Pump Efficiency**. Rate dewatering pumps in accordance with average overall efficiency instead of efficiency at a fixed capacity rating. Average overall efficiency is based on the range of head stated above, and is defined as the ratio of the total work done to the total power input to the motor. The total work is determined by multiplying the amount of water pumped in each interval between water level readings, by the average head in the same interval.

7-4.8 **Pumps**. In the design and operation of pumping units, provision must be made for certain relationships between the suction lift and/or head, discharge head, capacity, and speed. This design factor is necessary to obtain rated capacity and efficiency, and to avoid outage and high maintenance from vibration and cavitation.

Fig. 7-1 Characteristic Curves for 54-Inch Mixed Flow Pump

TIME	TOTAL DYNAMIC HEAD (FEET)			CAPACITY (GALLONS)	NET STATIC HEAD (FEET)
	DISCH	SUCTION	NET		
12:10	116.5	92.5	24	109,000	0.8
12:33	113.8	87.3	26	105,000	5.5
1:06	109.6	76.8	32.8	100,000	13.1
1:37	106.8	72.0	34.5	95,000	20.3
2:08	104.6	64.3	40.3	90,000	26.7
2:40	102.7	58.0	44.7	85,000	33.3
3:06	101.4	53.0	48.4	80,000	38.3

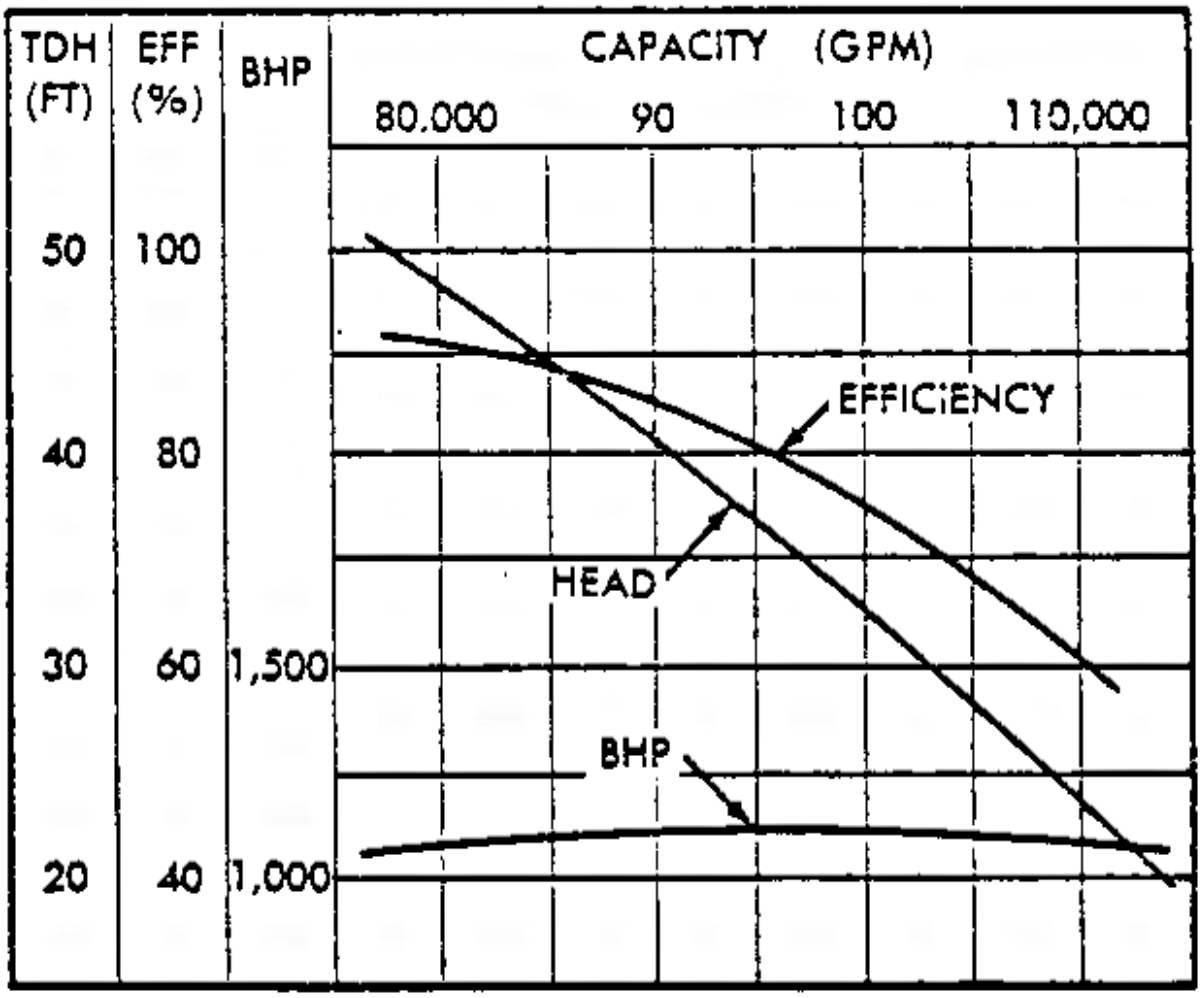

7-4.8.1 **Main Dewatering Pumps**. At least two main dewatering pumps are required to meet the dewatering time requirement and to have redundancy. Limit the size to 1.37 m (54 in.)

7-4.8.1.1 **Classes of Pumps**. The three general classes of pumps suitable for moving large volumes of water at relatively low heads are as follows:

- Axial flow. For static head pumping up to 7.62 m (25 ft), axial flow units (propeller) may be the most desirable.
- Mixed flow. Mixed flow units give good results on heads up to approximately 22.86 m (75 ft.)
- Centrifugal. Centrifugal pumps are more suitable for the higher heads.

7-4.8.1.2 **Design Problems**. Drydock dewatering presents unusual water pumping problems because of the extreme variations in both suction and discharge heads. See Figure 7-1 for typical operating characteristics of a 1.3 m (54-in) mixed flow impeller pump operating under graving dock hydraulic conditions. For the proper positioning in the pumpwell or various types of pumps and for typical arrangements of intake and discharge, refer to *American Civil Engineering Practice, Volume II*.

7-4.8.2 **Drainage Pumps**. Provide drainage pumps to remove seepage, precipitation, caisson and valve leakage, and wash water, and to clear the dewatering pump suction chamber and drainage system. Because of sandblasting operations, the drainage pumps (and sump pumps discussed below) must be capable of handling a certain amount of sand and sandblasting products in suspension without excessive wear on casings of impellers. Also, ready access should be provided to pump suction chambers through manholes or other openings located so as to facilitate easy cleanout of these chambers.

7-4.8.2.1 **Number of Pumps**. The number of pumps should never be less than three on the basis that drainage system redundancy is maintained by two operational pumps when the third is out of commission.

7-4.8.2.2 **Pump Capacity**. Estimate the total capacity required for relieved docks from an evaluation of the foundation permeability. For gravity docks, where only two units are required, the capacity of each unit should be:

- Submarine or destroyer docks, 9462.5 L/min (2,500 gpm.)
- Cruiser docks, 18925 L/min (5,000 gpm.)
- Carrier and Auxiliary docks, 28387.5 L/min (7,500 gpm.)

7-4.8.2.3 **Types**. Drainage pumps should be vertical shaft, direct connected, motor driven; they may be of the wet or dry pit type:

- Wet pit pumps may be similar to main dewatering pumps of the axial discharge type.
- Dry pit pumps may be a mixed flow or centrifugal unit.
- Axial discharge pumps are the least expensive in that no suction piping and only a relatively small amount of discharge piping is required.

7-4.8.2.4 **Head and Motor**. The required pumping head of drainage pumps is higher than that for the main dewatering pumps and is not so variable. Motors are generally located on the dewatering pump motor drive floor.

7-4.8.2.5 **Environmental Requirements**. Local regulatory authorities may have specific requirements for drainage pumping discharges. Refer to local regulations.

7-4.8.3 **Sump Pumps**. Sump pumps, vertical drive wet pit (submerged) centrifugal type, should have a capacity of 283.88 L/min (75 gpm) each, and should be installed in duplicate.

7-4.9 **Pump Drives**. Use vertical motors directly connected by line shafts to pump impellers. Main dewatering pumps generally are of the dry pit type. Install the motors and electrical switchgear on a floor only sufficiently below the top of the dock to allow for equipment and operating headroom. Place drainage pump motors and the drive mechanism for control of the main valves on the motor drive room floor. Drainage pump motors may be at a lower elevation to shorten the shafts, as long as they are above the possibility of being flooded due to a flooding pumpwell, or are submersible.

7-4.9.1 **Speed**. Speeds of dewatering pump motors are dictated by the specific speed of the pump impellers; generally, low speed motors are required.

7-4.10 **Driving Shaft**. The entire weight of revolving parts of the vertical pumping unit should be carried by a thrust bearing in the base of the motor at the top of the shaft. Specific requirements include the following:

7-4.10.1 **Thrust Bearings**. Use self-aligning thrust bearings.

7-4.10.2 **Guide Bearings**. Guide bearings must be of sufficient strength and adequate design to prevent vibration for lateral deflection of the vertical shaft. Use self-aligning and adjustable; the bearing surfaces may be of bronze or babbitt.

7-4.10.3 **Lubrication**. Provide adequate lubrication. Generally, use water for this purpose where the bearings are submerged in the pump discharge stream. Provide clean, cold, fresh water of ample volume and pressure.

7-4.11 **Elevation of Pumps**. Determine pump elevation by the vertical position of the dewatering pump impeller centerline. For vertical type centrifugal or mixed flow dewatering pumps, refer to the centerline of the pump discharge. For vertical mixed

flow main pumps, the pump elevations shall be about 0.9144 m (3 ft) below the drydock floor.

7-4.12 **Priming**. All graving dock pumps not set at an elevation at which the impeller is submerged at all times must be equipped for priming. Priming consists of flooding the pump suction piping and the pump casing surrounding the impeller by removing air by means of a vacuum pump.

7-4.13 **Heating and Ventilating**. Provide heating and ventilation in the pumproom, as required to prevent damage by moisture condensation and freezing, and for the comfort of the operating personnel.

7-5 **FIELD TESTING OF DEWATERING SYSTEM**. In order to check the operating characteristics with design requirements, it is necessary to field test the dewatering pumps, including the hydraulic system as installed. These tests cover pump capacity, power consumption, and evaluation of efficiency. For the results of an actual field test, see Figure 7-2.

7-5.1 **Determination of Capacity**. Prepare a volumetric curve on which the volume of water in the graving dock, in cubic feet, is plotted against elevations referred to the datum plane, or to some other fixed elevation such as the graving dock floor or coping. When appreciable leakage occurs, a leakage curve is prepared by recording the rate at which water in the dock rises at various elevations.

7-5.1.1 **Curve Construction**. During pumping tests, the water elevations in the dock are usually taken at intervals of 10 minutes. To the amounts of water pumped, as determined from these observations, add the appropriate amount of leakage taken from the leakage curves. The average capacity is the total amount of water pumped, divided by the pumping time. Take water level readings in the dock with great accuracy, preferably at two or more points simultaneously, and average. Use specially constructed gages for obtaining accurate readings, unaffected by waves. To eliminate inaccuracies in observations, plot all readings to large scale, draw a smooth curve, and make any necessary corrections.

7-5.2 **Power Input**. Take readings, simultaneously with those for capacity, of the power input to motors, as determined by calibrated wattmeters placed in the circuit as near as practicable to the main switchboard panels. In computing results, make corrections for ratio, scale, and phase-angle error. Determine frequency from speeds taken on a synchronous motor feeding from the same source of supply as the pump motors. Read pump speeds with a speed counter and stop watch directly from the motor shaft.

7-5.3 **Determination of Head**. Efficiency requirements may be based on total dynamic head as determined by calibrated gages in the suction and discharge of each pump, but variable results are obtained by this method. Tests based on static heads between the levels of the water in the dock and the sea are more reliable than gage tests, and give a more practical indication of the performance of the plant as a whole.

The objection to this method is that a pump manufacturer, in order to furnish guarantees of efficiency, must estimate all friction losses in the system.

7-5.4 **Tide Effect**. Generally, tests to determine capacity and efficiency are so timed that the end of the test will occur when the elevation of the tide is at approximately mean high water or mean higher high water. Although it is necessary that the pumps be capable of dewatering docks at any tide stage, the average condition of the tide for graving dock pumping is probably nearer half tide than high water. At locations where tide range is considerable, it may be more reasonable to base capacity and efficiency requirements and tests on half tide conditions.

Fig. 7-2 Curves From Field Tests

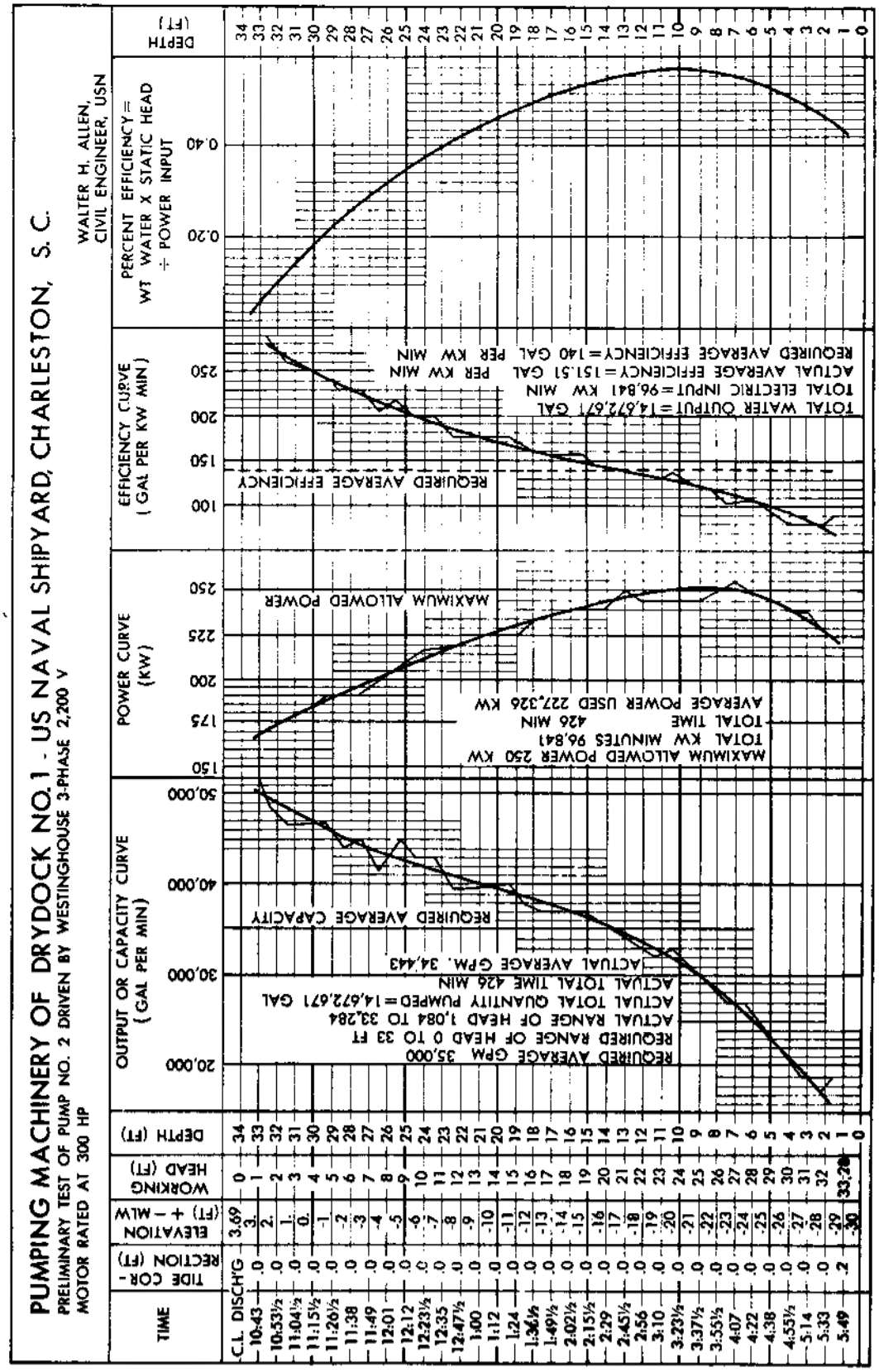

CHAPTER 8

FITTINGS, SHIP BLOCKING, SUPPORTING FACILITIES AND SHIP SERVICES

8-1 **FITTINGS**. Major fittings, and fittings peculiar to graving docks, are covered in this section; other fittings are merely mentioned. All fittings must be made of corrosion resistant materials and installed in a way that will minimize maintenance. Ferrous metal fittings must be zinc coated; small fittings may be cadmium plated.

8-1.1 **Capstans**. Capstans are used at graving docks for pulling vessels into the dock chamber, and entrance caissons into seat or stowed position.

8-1.1.1 **Location**. Locate one capstan on the centerline of the dock at the head end; one at each side of the caisson seats at the entrance end; and others on the sides of the graving dock, spaced not more than 91.44 m (300 ft) apart. Set capstans shoreward of the outermost crane rail of the track nearest to the centerline of the dock.

8-1.1.2 **Requirements**. Use capstans of the reversing gypsy-head type consisting of a barrel mounted on a vertical shaft and driven by a two-speed squirrel-cage induction type electric motor through reduction gearing. For electric control should be by means of 460-volts, three-phase 60 Hertz current, a magnetic reversing controller, including transformer and relay cabinet, push-button station and flexible cord, providing for full voltage starting at both speeds. Arrange the completed equipment to operate with a minimum of noise and vibration.

Arrange all parts subject to wear so that they may be accessible for inspection, lubrication, and cleaning. Secure all fastenings that are likely to become loosened by vibration by locknuts or other suitable devices. Use material commonly used for the service required and marine environment. The entire capstan unit should be designed and furnished by the same fabricator. Templates should be furnished for setting anchor bolts.

8-1.1.3 **Capacity and Speed**. Capstans must be capable of pulling up to 13,500 kg (30,000 lbs) at a line speed of 0.1524 m/s (30 fpm) and up to 6750 kg (15,000 lbs) at 0.3048 m/s (60 fpm) with slack speed of 0.4572 m/s (90 fpm). Design capstans to also be used as bollards with a line pull of 45,000 kg (100,000 lbs) applied at the center of the barrel and directed upward at an angle of 30 degrees with the horizontal. Any required variations in the above indicated line pulls and speeds will be specified in project requirements.

8-1.1.4 **Capstan Pits**. Locate capstan driving mechanisms and foundations below coping elevation in pits generally consisting of shallow concrete chambers founded on heavily reinforced concrete slabs firmly anchored and supported by batter and vertical piles. To avoid interference with lines, expose only the capstan barrel and the watertight cover of the capstan pit.

In addition:

- Secure machinery with anchor bolts embedded in chamber foundations. Provide watertight manholes for limited ready access to machinery, and an overall pit cover made in sections to permit removal of machinery.

- Provide capstan pits with drainage systems large enough to drain off normal precipitation as well as possible heavy leakage.

- Capstan pits, subject to humidity that might interfere with electric motor operation, may require portable blowers to dry out the pit before operation. For drawing of capstan and pit for drydock application, refer to American Civil Engineering Practice, Volume II.

8-1.1.5 **Controls**. Install electric power capstan controls in machinery pits. Provide topside controls, and locate them so that they allow the operator an unobstructed view, clear of lines and working parties. Topside controls should be portable so they may be stowed when not in use. Install controls in watertight enclosures.

8-1.2 **Bollards**. Bollards are cast steel, upright (concrete filled) posts secured to foundations by steel bolts. Refer to MIL-HDBK-1025/1 *Piers and Wharves* for design of bollards.

8-1.2.1 **Location**. Set bollards in line with the capstans at approximately 15.24 m (50 ft) on centers between capstans.

8-1.2.2 **Pull**. Use bollards capable of withstanding a pull of 45,500 kg (100,000 lbs).

8-1.2.3 **Shape**. Bollards must be shaped so that lines will not slip, jam, or ride off the top.

8-1.2.4 **Foundations**. A bollard foundation may be a large block of concrete adequately supported by piles arranged to resist large overturning moments. Construction economy may be effected by tying bollard foundations to outer crane rail foundations.

8-1.3 **Cleats**. Install cleats (heavy cast steel fittings with horns) spaced about 60 ft (18.3 m) on centers on the coping, and use for securing mooring lines. Refer to MIL-HDBK-1025/1piers and Wharves for design of cleats.

8-1.4 **Stairways**. Stairways in the drydock may be cast as part of the wall concrete or may be constructed of structural steel with open mesh steel treads. Since steel stairways can be damaged by falling objects, fouled lines, and swinging crane loads, bolt the supports to the walls in order to facilitate repair. Install stairways at the following locations:

- One from coping to floor on each side of the dock, inshore from inner caisson seat.

- One from coping to floor on each side of the dock at the head end.
- One or more from yard level to pumproom floor in the pumpwell.
- One on each side of the drydock, from coping to floor and/or to utility service galleries at a spacing of about 91.44 m (300 ft.)

8-1.5 **Ladders**. Provide ladders only where the available space is insufficient for stairways, or where traffic is too light to warrant stairway construction. Place ladders in pumpwells as leads to access hatches and large manholes.

8-1.5.1 **Steel Shapes**. Fabricate ladders of steel shapes. Plug weld rungs into rails. Install ladders so that the distance from the rungs to the finished wall surface will not be less than 177.8 mm (7 in.) Secure ladders to the adjacent construction with heavy clip angles, welded to the rails and secured to masonry, concrete, or stud framing with not less than two 15.875 mm (5/8-in) diameter bolts. Intermediate clip angles must be provided not over 1.52 m (5 ft) on centers. Provide brackets as required for securing of ladders welded or bolted to structural steel and built into the masonry or concrete. In no case should ends of ladders rest upon finished roof or floor. Ladders and supports must be galvanized after fabrication unless a corrosion resistant material is used. Bar steel rungs may be installed 305 mm (12 in) apart, vertically below manholes, and at other locations where frequent access is not generally necessary.

8-1.5.2 **Stainless Steel**. Low carbon stainless steel (310SS-316SS) rungs and ladders should be considered for alternating wet-dry, high corrosion areas.

8-1.6 **Railings**. Provide pipe railings around fixed installations (such as machinery), around open shafts, along dock walls at altars or setbacks, and along the top edge of retaining walls. Chain and removable stanchions or removable solid railing sections may be installed where removability is required around permanent openings and installations. Incorporate fall protection requirements where removable railings are installed. Install fall protection tie off points that can be used when railings are removed.

8-1.6.1 **On Coping**. Provide a removable railing. Chain railing is often used, but maintaining adequate chain tension is a common problem. Solid metal pipe or fiberglass railing, provided in 2.4–3.7 m (8-12 ft) sections for ease of removal/reinstallation, is preferred. Solid railing sections should fit securely into sockets fastened to the coping and are open on the bottom to prevent debris accumulation. If chain railing is used, it should consist of two lines of zinc coated, or other corrosion resisting material, chains running through steel stanchions spaced at 2.44 m (8 ft) intervals along the coping. The top chain should be taut to prevent people from losing their balance if they lean against it. If space permits, place the stanchion inserts 304.8 mm (12 in) back from the edge of the coping.

8-1.6.2 **On Stairways**. Provide rigid pipe guard railing of two parallel pipes approximately 50.8 mm (2 in) diameter and running between fixed pipe stanchions on all stairways. These may be a removable type, if necessary.

8-1.7 **Marking Plates**. Provide plates in dock structures marked with their exact stationing in the dock to facilitate setting of keel and side blocking.

8-1.7.1 **Composition and Marking**. Marking plates should be bronze or stainless steel metal plates approximately 203.2 mm (8 in) long by 101.6 mm (4 in) wide set flush with end anchored into the embedding concrete. Each plate shall be marked appropriately with centerlines, and with respective distances to the graving dock centerline and abutment. Figures should be 50.8 mm (2 in) high and permanent.

8-1.7.2 **Location**. Marking plates must be laid out accurately. Set marking plates at the following points:

- One on each coping at the drydock entrance.
- In both copings at approximately 12.2 m (40 ft) intervals from the drydock entrance toward head end.
- One near the coping edge on the graving dock centerline, at the head end.
- One several feet back from the coping edge on the dock centerline, at the head end.
- One in the dock floor, several feet to one side of the dock centerline, sufficient to clear keel blocks, and at approximately 12.2 m (40 ft) intervals from the drydock entrance coordinated with b) above.

8-1.8 **Fenders and Chafing Strips**. To protect masonry structures at a dock entrance, or a caisson berth, provide fenders and/or chafing strips as required. Use fenders as necessary to protect equipment (such as stairways, ladders, floodlights, and service outlets) from being fouled by a vessel entering or leaving a dock. Generally, treated timbers anchored by bolts are used as chafing strips and fenders, but suitable, rotatable, pneumatic and rubber fenders may also be used. Refer to MIL-HDBK-1025/1 *Piers and Wharves* for design of fenders.

8-2 **SHIP BLOCKING**. Responsibilities for design and material specification of ship blocking rests with the Naval Sea Systems Command (NAVSEA). The information herein is basic guidance; Consult NAVSEA for criteria beyond the planning stage.

8-2.1 **Ship Supports**. Provide means to keep a docked vessel far enough above the floor to permit work on its keel, giving allowance for removal or installation of sonar domes, rudders, propellers, and similar parts. Blocking arrangements are laid out in the dock in accordance with the docking plan for each individual vessel.

8-2.2 **Dog and Side Shores**. Long overhangs of vessels are frequently supported by shores. Shores are wedged against the ship bottom and/or its sides, either against dock wall altars or against the dock floor.

8-2.3 **Keel Blocks**. Keel blocks are placed under the longitudinal centerline keel of the vessel. The exact location of the blocks depends on a vessel's docking plan. All keel block are interchangeable; therefore, each is designed for the maximum ship load likely to be imposed upon it at any location. Compression is the primary stress, but provision must be made to resist uplift, overturning, and horizontal movements induced by eccentric loads, earthquakes, or accidental impacts. Reinforced concrete stresses are not critical in design; grade of concrete and amount of reinforcement steel are selected to resist rough handling and temperature variations. Standard composite keel blocks (see Figure 8-1) were historically rated at 228610 kg (25 long tons), based on an allowable stress for wet timber in compression perpendicular to the grain taken at 1724 kPa (250 psi) for soft caps. This allowed a reasonable safety factor. For the standard 1.8 M (6 ft) center-to-center keel block spacing, that rating represented a 34014 kg/m (37.5 tons/ft) ship load. Now, the safe allowable timber compressive stress for distributed loading, taken as the fiber stress at the proportional limit of Douglas Fir, is 2552 kPa (370 psi). This assumes a uniform pressure over the entire 1067 by 1219 mm (42 by 48 inch) top of a docking block, resulting in a total load of about 335,295 kg (330 long tons). Most ships have narrower skegs and the allowable block loading is decreased accordingly. For allowable block loadings for this condition, refer to *Naval Ships Technical Manual, Chapter 997, Docking Instructions and Routine Work in Drydock*.

8-2.4 **Bilge or Side Blocks**. Bilge or side blocks are composite or timber, built up, shaped, and located according to dimensions indicated in the table of offsets of docking plan of the vessel. These are designed for 1724kPa (250 psi) load applied uniformly over the effective bearing area in contact with the hull of the ship. Batten each block adequately for stability, and the resultant load reaction should fall within the middle one-third of the base dimension of the block on the dock floor.

8-2.5 **Type of Construction**. Build composite blocks with wood top and bottom layers, and concrete sandwiched in between. Use sufficient concrete to make the blocks nonbuoyant. Secure the wood layers to the concrete with steel bolts embedded in the concrete. U-bolts embedded in the sides of the concrete may be provided for lifting, or pipe holes may be provided through the blocks to insert pipes for lifting by forklift or crane rigging. All hardware (except dogs) should be zinc coated or cadmium plated. For a typical block, see Figure 8-1. For heavy loads, these blocks may be used double as indicated in Figure 8-1.

8-3 SUPPORTING FACILITIES

8-3.1 **Industrial Shop Facilities**. Shipbuilding graving docks and graving docks used for extensive repair, alteration, and the rebuilding of vessels must be supported by industrial shop facilities capable of manufacturing or otherwise supplying, installing, and testing the large number of items required.

8-3.2 **Transportation Facilities**. A graving dock must be serviced by the following transportation facilities.

8-3.2.1 **Paved Road Network**. This network provides access to the entire dock area and should be capable of carrying trailer trucks, flatbed trucks, mobile track cranes, truck cranes, and other heavy traffic.

8-3.2.2 **Parking Facilities**. Provide parking as space permits clear of the graving dock operating areas.

8-3.2.3 **Standard Gage Railroad Track**. Where material for the graving dock operations is delivered to the yard by rail, a standard gage track may be provided on either side of the dock. At the dock, locate this track between the portal crane rails nearest to the dock. This standard gage track may also be used for the operation of locomotive cranes. At some yards, materials may be handled by heavy truck cranes instead of locomotive cranes, and railroad tracks may not be required.

Use MIL-HDBK-1025/1 *Piers and Wharves* for track support design.

8-3.2.4 **Portal Crane Track**

8-3.2.4.1 **Location**. To minimize the required reach of drydock cranes over a graving dock, locate crane rails as close to the edge of the coping as possible, but not nearer than about 1.5 m (5 ft). Because they must withstand high weight concentrations and shock loads, crane rails, unless supported directly on the dock walls, are usually supported by concrete beams on closely spaced piles, or by continuous spread footings generally tied in at intervals with the graving dock sidewalls. There are some locations where trackage may be supported by ties and ballast. Portal cranes may be designed to operate on either a two-rail track or a four-rail track. Space tracks far enough apart to allow passage of railroad and truck traffic between outer rails of pairs of rails.

Fig. 8-1 Ship Blocks

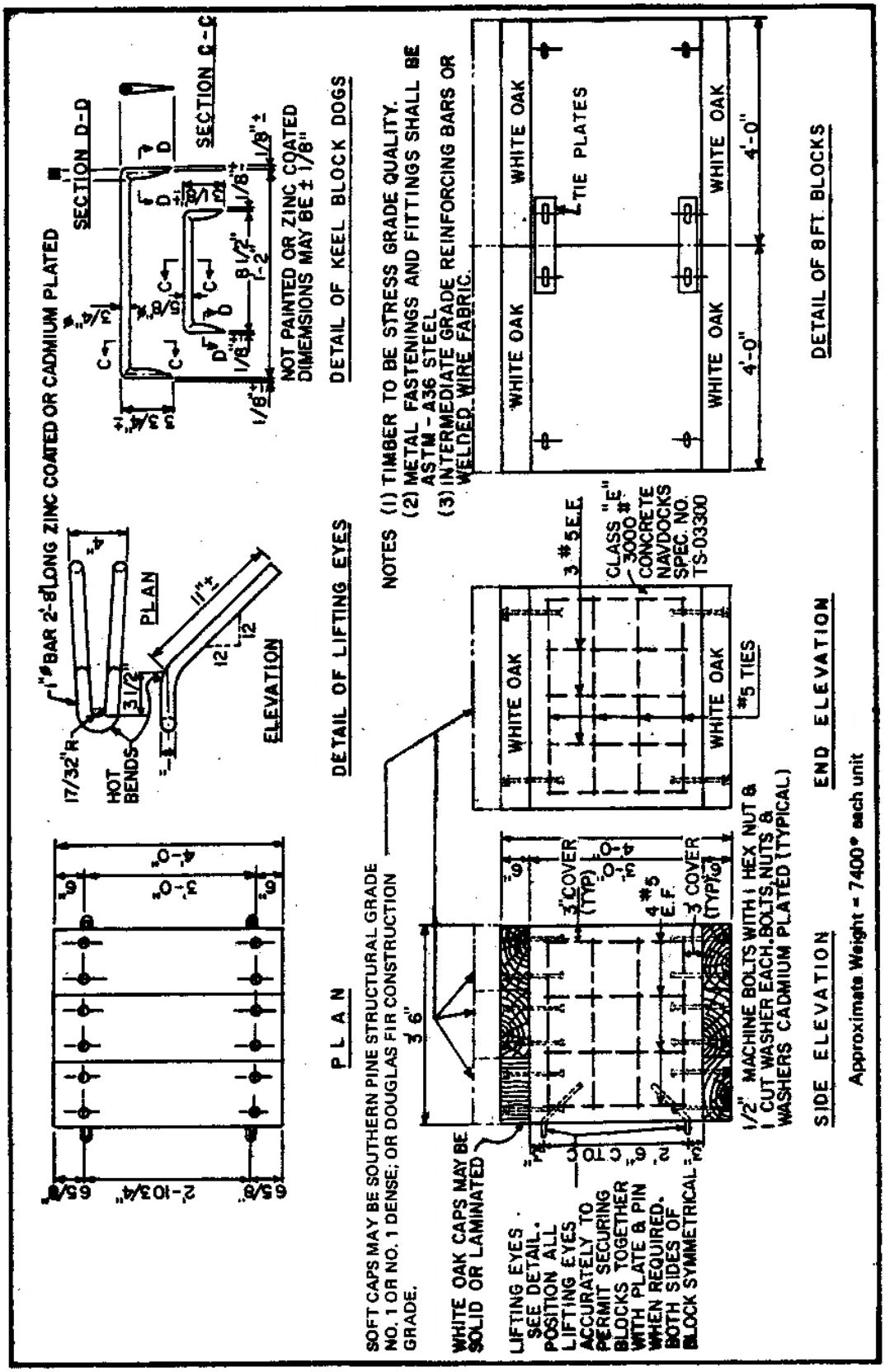

8-3.2.4.2 **Interchangeability**. To obtain maximum operational efficiency and economy, portal cranes should be interchangeable among the various yard facilities they might serve. As far as possible, incorporate the following features into a yard crane track layout:

- All portal crane tracks should have the same gage as other yard crane tracks.
- When track consists of two pairs of rails, lay each pair at standard railroad gage.
- Interconnect the various crane tracks.
- Provide spur track turnouts for repairing cranes.
- Provide a sufficient number of switches and passing tracks to permit individual cranes and other rolling stock to travel without interrupting the operation of other cranes.
- Refer to MIL-HDBK-1005/6 *Trackage* for crane track alignment procedure.

8-3.3. **Weight and Materials Handling Equipment**. Small capacity locomotive or motor truck cranes are assigned to graving dock activities to supplement portal cranes. The locomotive cranes operate on the standard gage railroad track.

8-3.3.1 **Portal Cranes**. These cranes are constructed on portal frame bases that travel on wide gage (6.096 to 9.144 m) (20 to 30 ft) tracks. Refer to MIL-HDBK-1038, *Weight Handling Equipment*. Capacities and reach should be as specified for each individual project.

8-3.3.1.1 **Clearances**. Clearances must be such as to permit complete rotation (360 degrees) without interference with the ship in drydock, buildings, or other structures. Cranes and track layout must be carefully studied to ensure adequate clearances in the way of overhanging deck structures of aircraft carriers. For carrier docks, provide two sets of tracks on each side of the dock, one of conventional arrangement with rail near the edge of the coping, and one outboard at a distance sufficient for the crane to clear the flight deck of the carrier.

8-3.3.1.2 **Power Drive**. Portal cranes should, in general, be powered by self-contained diesel electric drive.

8-3.4 **Personnel Facilities**. Provide facilities such as lavatories, showers, and lunchrooms near the graving dock.

8-3.4.1 **Lavatories**. Provide lavatories fairly close to the graving dock. They should contain toilets, urinals, washbowls, showers, first aid equipment, and perhaps equipment lockers. They should be large enough to accommodate the normal complement of the yard crew working in or around the graving dock, and the crew of

any docked vessels. When the sanitary facilities of a docked vessel are being worked on, they are very often unavailable for use; therefore, separate dockside facilities are often reserved for use by the vessels officers and crewmembers on duty.

8-3.4.2 **Lunchrooms**. Provide an appropriate type lunchroom near the graving dock.

8-3.4.3 **Quarters for Ship's Crew**. When extensive repairs or alterations are performed on a vessel in active service, work is often carried on around the clock. The accompanying noise and construction activities may prohibit habitation on the vessel. Under these conditions, provide quarters ashore for the use of the officers and crew of the ship.

8-3.5 **Storage Facilities**. Provide storage space to house the infrequently used dock gear, such as hawsers, cables, rafts, floats, fenders, portable communication equipment, and portable floodlights.

8-4 **MECHANICAL SERVICES**. Ships in graving docks are unable to fill their own requirements for mechanical services essential for work, habitation, comfort, and protection. These services, and those required for repairs and cleaning associated with the docking operations, must be supplied from dockside facilities. Such services include steam, compressed air, water, Wheeler system, oxygen, acetylene, and sewage disposal. Utility requirements for specific ship classes is provided in MIL-HDBK-1025/2 *Dockside Utilities*. Where there is a conflict between requirements identified in MIL-HDBK-1025/2 *Dockside Utilities* and this document, the more stringent (greater requirement) governs.

8-4.1 **Pipe Galleries and Tunnels**. Carry service pipes, except sewer pipes, in tunnels or in galleries at the top of the dock sides. The open type gallery is desirable, and should be used unless prohibited by some compelling reason.

8-4.1.1 **Design**. Design the gallery to be approximately 2.13 m (7 ft) high, and recessed 1.22 m (4 ft) or more into the dock wall. Provide a wall on the dock side approximately 0.76 m (2-1/2 ft) high, topped by a low railing for safety of personnel in the gallery.

8-4.1.2 **Service Line Location**. Mount service lines on the walls and ceiling of this galleries and pipe tunnels.

8-4.1.3 **Advantages**. Open type galleries have the following desirable features:

- Safer to work in than on an altar.
- Better lighting.
- Ample working space.
- Ample room for addition of services.

- Accessibility to all outlets along the dock.

8-4.1.4 **Outlets**. Locate service outlets in accordance with criteria in MIL-HDBK-1025/2 *Dockside Utilities*.

8-4.1.5 **Looped Pipelines**. Sectionalize and valve all liquid, steam, and gas lines to provide service with a minimum of interruption of work should a break occur along any line.

8-4.2 **Fresh Water**. For industrial use, and with an abundant supply, it may be used to fill fire protection, flushing and cooling requirements. In cold climates, waterlines must be protected from freezing. Provide meters to record water consumption. All fresh water outlets must have a backflow preventive device, and be painted as specified in MIL-HDBK-1025/2 *Dockside Utilities*, for services on piers.

8-4.2.1 **Potable Water**. Provide one 63.5 mm (2-1/2 in) valved outlet at each service gallery, and size the mains to adequately provide the required quantity of distilled or potable water at a residual pressure of 275.79 to 551.58 kPa (40 to 80 psi) at any outlet. The quantity of water required by drydocks is contained in MIL-HDBK-1025/2 *Dockside Utilities*

8-4.2.2 **Flushing and Cooling**. Flushing/cooling systems are be part of the fire protection systems where high pressure fire protection systems are provided, including the following:

- If a graving dock is provided with fire hydrants only outside the dock, as fire protection, install the flushing/cooling systems separately.

- Provide one 63.5 mm (2-1/2 in) valved outlet in each service gallery.

- Supply the quantity of water required for flushing and cooling to the most remote flushing/cooling outlets at not less than 276 kPa (40 psi) residual pressure. Connect systems either to station pumps or to separate graving dock pumps having a minimum discharge pressure of 1034.21 kPa (150 psi). The required quantities for combined flushing, cooling and fire protection are contained in contained in MIL-HDBK-1025/2 *Dockside Utilities.*

8-4.3 **Salt or Nonpotable Water Supply**. When fresh water is not abundant, use salt or nonpotable water system for flushing, cooling and fire protection.

8-4.3.1 **Station System Connection**. Where a graving dock fire protection system is connected to station fire protection and flushing/cooling systems, make connection through a valved check valve and a valved pressure reducing valve in a bypass permitting the station system to supply flushing/cooling water to the dock system. This arrangement also permits the graving dock fire protection pumps to augment the station system in emergencies.

8-4.3.1.1 **Alternative Arrangement**. If this arrangement is not possible, install flushing/cooling pumps with minimum discharge pressures of 1024.21 kPa (150 psi,) at most remote outlet. Arrange graving dock fire pumps in parallel operation for flushing and cooling, and arrange series operation for standby fire protection.

8-4.3.1.2 **Fire Pumps**. Station fire protection system pumps should have at least 50 percent of the maximum fire flow requirements in diesel driven fire pumps. Dual power driven fire pumps are not allowed by code (unless installed before the adoption of the 1974 edition of NFPA 20). Fire pump installations shall conform to the provisions of National Fire Protection Association (NFPA) Standard No. 20, *Standard for the Installation of Stationary Fire Pumps for Fire Protection*.

8-4.3.2 **Type of Piping**. All piping for graving dock fire protection systems shall be cement lined AWWA ductile iron pipe, class to suit required fire pressures, with lugged and rodded joints and fittings (except the pipes in pumpwells and service galleries should be flanged). Any joint of equal strength may be used, subject to the approval of NAVFAC HQ.

8-4.3.3 **Pipe Sizes**. Where station systems are connected to drydock systems, pipe sizes from station pumphouse to docks should be generous enough to provide pressures for drydock flushing and cooling requirements.

8-4.4 **Specific Requirements for Salt or Nonpotable Water**. Provide salt or nonpotable water to meet cooling/flushing and fire protection demands as contained in MIL-HDBK 1025/2 *Dockside Utilities*. According to MIL-STD-1625C(SH) Notice 1, *Safety Certification Program for Drydocking Facilities and Shipbuilding Ways for U.S. Navy Ships*, (or latest edition), the minimum fire protection requirement for all drydocking facilities is 1135.5 L/min (300 gpm) per 30.48 m (100 ft) of docked ship, at 1034.21 kPa (150 psi) at the most remote outlet.

8-4.5 **Wastewater Collection**. Segregation of sanitary sewage, industrial wastewater and hydrostatic leakage water is required. Drydock and ship sewage will be collected and discharged into the station sewerage system. Hydrostatic leakage not mixed with industrial waste is not polluted, therefore can be pumped into receiving waters, except at locations where local environmental regulations forbid it. Refer to local regulations.

8-4.5.1 **Sanitary Sewer System**. All sewage and hotel wastes from ships in drydock shall be collected and transported to a treatment plant. Preferably, locate a sewer main on each side of the dock. Discharge of all sewage to a main on only one side of the graving dock should be considered if local circumstances dictate. Provide receiving manifolds located along the coping of the graving dock and connect to the main sewer through laterals. Transport sewage from the ship to the manifold receiving connection by way of a hose. Design the sewer system to meet peak flow rates from the largest ship class for which the drydock is designed. These are contained in MIL-HDBK 1025/2 *Dockside Utilities*. For additional design criteria refer to UFC 3-240-02, *Design - Wastewater Treatment System Augmenting Handbook*.

8-4.5.1.1 **Receiving Hose Connections**. Space the receiving hose connections approximately 45.8 m (150 ft) on centers. The 45.8 m (150 ft) spacing may be varied to suit docking conditions in a specific drydock. Locate the hose connections between the edge (coping) of the graving dock and the crane track to eliminate any interference with the operation of the cranes. Make each connection 101.6 mm (4 in) diameter and install an in-line check valve to prevent backflow.

8-4.5.1.2 **Laterals**. Laterals between the receiving hose connections and the main sewer must have a diameter of 101.6 mm (4 in.) Where possible, the laterals should be located in the drydock service and pipe galleries to minimize installation costs and to facilitate maintenance. Pitch laterals to drain to the main sewer. Consider local conditions for the optimum location of the laterals.

8-4.5.1.3 **Main Sewers**. Size main sewers to receive ship discharges plus any other flow entering into the collection system. Main sewers should be located in the pipe galleries or beyond the structural concrete of the graving dock. Consider local conditions for the optimum location of the main sewers. Main sewers should be gravity sewers and slope toward the inboard end of the dock and connect to the station sewer system or to a pump lift station. Use a force main where it is impracticable to install a gravity sewer. Locate sewer cleanouts in the main sewers at a maximum spacing of 91.44 m (300 ft.)

8-4.5.1.4 **Ship-to-Dock Transfer System**. Ships outfitted with Collection, Holding, and Transfer (CHT) systems discharge sewage under pressure on the lowest weather deck. Ships not outfitted with CHT systems will discharge through existing outlets in the hull. For ships not outfitted with CHT systems, a temporary system for collecting sewage from multiple outlets must be installed.

8-4.5.1.4.1 **Auxiliary Pumping**. Gravity drydock sewer systems may require auxiliary pumping when the ship's discharge point is below the level of the top of drydock wall. The facilities required for auxiliary pumping include hose, portable wet well, and pump. Use a 101.6-mm (4-in) sewage hose to transfer sewage from the ship or portable pumping unit to the drydock sewer system. Refer to Figure 8-2.

8-4.5.1.4.2 **Collection System and Components**. The temporary collection system for ships not outfitted with CHT system, and the auxiliary pumping system components, are collateral equipment to be furnished by the shipyard.

8-4.5.2 **Industrial Wastewater Collection**. Collect and treat industrial wastewater, including runoff and hydrostatic leakage that come in contact with industrial waste, such as sand blasting grit and organotin paint chips, as necessary, prior to discharge. Refer to MIL-HDBK-1005/9A, *Industrial and Oily Waste Control*. See section 7-1.1.3, for additional requirements.

Fig. 8-2 Schematic of Conditions for Portable Sewage Pumping Systems in Graving Docks

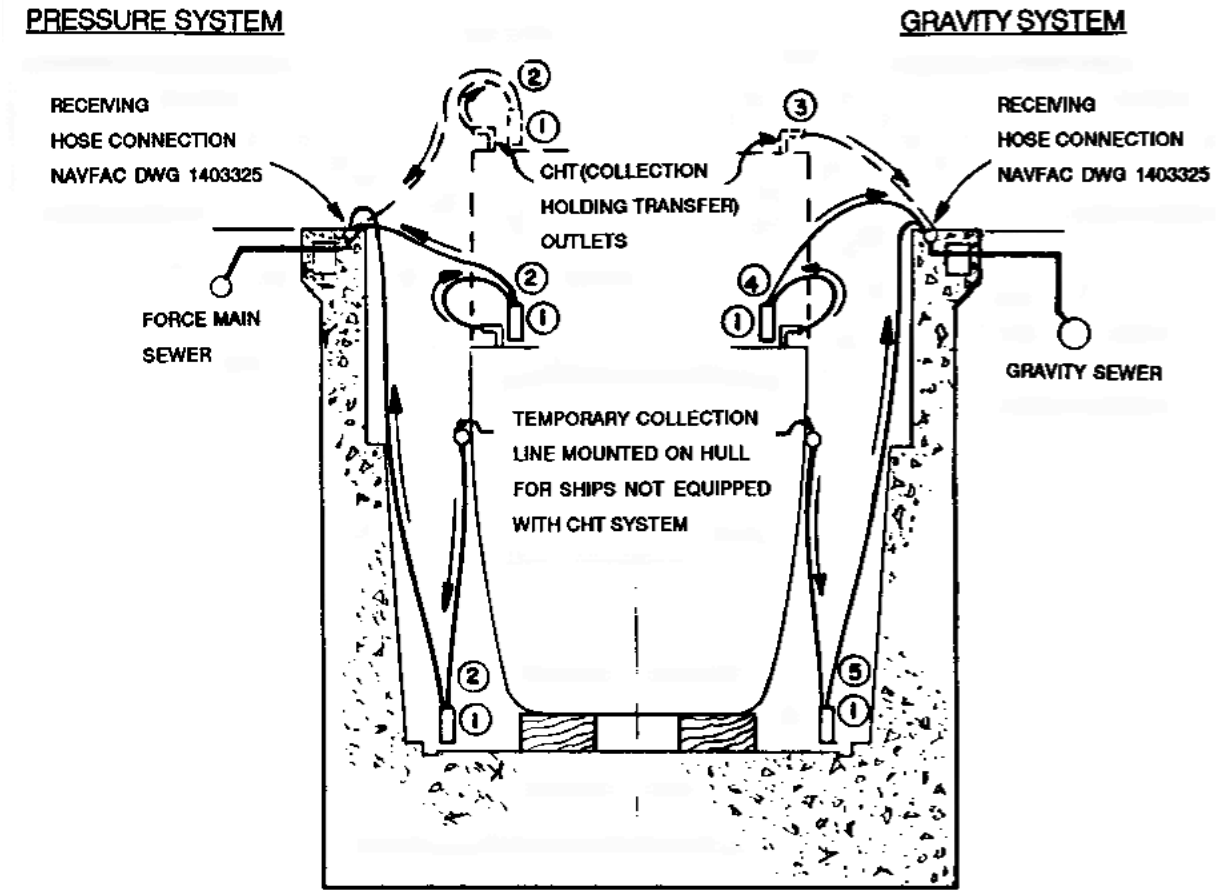

(1) INDICATES PORTABLE WET WITH SUBMERSIBLE PUMP

(2) PUMPING MAY BE REQUIRED FOR ENTRY INTO PRESSURIZED SYSTEM

(3) NO PUMPING REQUIRED WHEN CHT DISCHARGE IS ABOVE RECEIVING CONNECTION

(4) PUMPING MAY BE REQUIRED WHEN CHT DISCHARGE IS BELOW CONNECTION

(5) PUMPING REQUIRED WHEN SHIP HAS NO CHT SYSTEM

NOTE: THE TEMPORARY COLLECTION SYSTEM, HOSE, PUMP AND WET WELL ARE COLLATERAL EQUIPMENT TO BE FURNISHED BY THE SHIPYARD.

8-4.6 **Steam**. Steam is required in a graving dock for heating, cleaning equipment and tanks, and ship use. In northern latitudes, provision must be made for heating those areas in which personnel must remain for lengthy periods, such as pump rooms, motor rooms, caissons, toilets, and shower rooms. Use steam for deicing and for keeping necessarily exposed fresh waterlines from freezing. Freezing may sometimes be prevented by running a parallel steam line.

8-4.6.1 **Quantity**. Exact quantities of steam to be furnished to the ship are difficult to determine. Changes in ship designs, variations in ships of the same class, and differences in repair operations make close estimation of steam demand loads purely academic. On the other hand, providing sufficient steam to take care of the total maximum demand load that could occur under the worst conditions would result in a grossly over-designed and expensive system. MIL-HDBK-1025/2 *Dockside Utilities* gives the design steam demand for various ships.

Use engineering judgment to determine actual working values depending on the concurrency or nonconcurrency of other steam loads for the drydock complex, frequency of docking of maximum ship, and effect of multiple docking. High-pressure steam for test operations is usually provided from portable generators.

8-4.6.2 **Steam Mains**. Provide graving docks with steam mains on both sides of the dock. Size the pipe supplying the mains on each side to provide a carrying capacity equivalent to that of the two dock mains. For example, two 152.4 mm (6 in) mains, one on each side of the dock, require a supply pipe with a carrying capacity of two 152.4 mm (6 in) pipes, or an 203.2 mm (8 in) pipe. Base the determination of equal carrying capacities on a table of equalization of pipes. Refer to MIL-HDBK-1003/8A, *Exterior Distribution of Steam, High Temperature Water, Chilled Water, Natural Gas and Compressed Air*. The number and location of steam branch outlets vary from three to six on each side, depending on the size of drydock. Provide a suitable flanged valve provided with a blind flange for each branch outlet. Size mains and branch outlets for steam service, unless specifically directed otherwise, in accordance with the following:

8-4.6.2.1 **Submarine and Destroyer Docks**. For both single and double width docks, use 101.6 mm (4 in) main and 63.5 mm (2-1/2 in) outlets.

8-4.6.2.2 **Cruiser, Auxiliary and Carrier Docks**. Size mains according to quantity of steam carried and the permissible pressure drop. Outlets should be 63.5 mm (2-1/2 in.) Provide carrier docks with an additional 101.6 mm (4 in) outlet, located at the center group of service outlets on each side of the dock, for feeding ships with 101.6 mm (4 in) steam shore connections.

8-4.6.2.3 **Piping**. Steam piping must be in accordance with the provisions of MIL-HDBK-1003/8 *Exterior Distribution of Steam, High Temperature Water, Chilled Water, Natural Gas and Compressed Air*, concerning steam distribution systems. Condensate return piping usually is not required, but should be provided when recovery of the condensate is economically desirable or when dictated by special project requirements.

8-4.6.3 **Insulation**. Steam lines must be thoroughly insulated from source to outlets.

8-4.7 **Compressed Air**. Compressed air is required in a graving dock for tools and sandblasting.

8-4.7.1 **Quantity**. Determination of required quantities is dependent on the operations to be performed and ranges from 1.65 to 3.78 m^3/s (3,500 to 8,000 ft^3/min) for small and large docks, respectively.

8-4.7.2 **Mains**. All classes of graving docks should have mains on both sides of dock.

8-4.7.3 **Outlets**. Base number and location of outlets on service air requirements for hull maintenance. Provide a suitable flanged valve provided with a blind flange for each branch outlet. Do not use plug valves

8-4.7.4 **Size of Main and Outlets**. Size of mains and outlets shall be as follows:

Dock:	Main	Outlet
Submarine and Destroyer	101.6 mm (4in)	63.5 mm (2-1/2 in)
Cruiser	152.4 mm (6 in)	63.5 mm (2-1/2 in)
Auxiliary	152.4 mm (6 in)	63.5 mm (2-1/2 in)
Carrier	152.4 mm (6 in)	76.2 mm (3 in)

8-4.7.5 **Piping and Fittings**. Piping and fittings shall conform to the requirements of MIL-HDBK-1003/8 *Exterior Distribution of Steam, High Temperature Water, Chilled Water, Natural Gas and Compressed Air*.

8-4.7.6 **Air Pressure**. Air pressure at branch outlets should be 689.47 kPa (100 psi) unless otherwise specified in project criteria. High-pressure air for testing (20684 to 31026 kPa) (3,000 to 4,500 psi) should be described in project requirements and may be portable equipment.

8-4.8 **Wheeler System**. The Wheeler system is used to loosen and remove sludge and residue from ship's oil tanks while the vessel is in drydock. The Wheeler unit consists principally of a railroad flatcar or barge with four tanks and two pumps mounted on it. Connections between the flatcar or barge and ship services are made through a manhole called a Wheeler manhole. This manhole contains a 44.4 mm (1-3/4 in) washdown line, a 101.6 mm (4 in) suction line, a 44.4 mm (1-3/4 in) steam line, and a 50.8 mm (2 in) fresh waterline.

8-4.8.1 **Operation**. During operation, fresh water is taken into a tank on the Wheeler car and heated near boiling with steam. The heated water is then pumped through the washdown line into the ship's oil tanks. The hot water loosens the sludge and converts it into a froth. The dirty water and froth are then removed by the suction line and pumped into a tank on the flatcar.

8-4.8.1.1 **Compressed Air Outlet in Wheeler Manhole**. Provide a compressed air supply outlet in the Wheeler manhole if it is contemplated to remove the sludge from the Wheeler tank into an auxiliary tank on the flatcar.

8-4.8.1.2 **Compressed Air Outlet at Sludge Receptacle**. If the Wheeler unit is to be removed from the dock site and emptied into a sludge receptacle at some other location in the yard, provide the compressed air outlet at that point instead of in the Wheeler manhole.

8-4.8.2 **Manholes**. The size and type of services and the number, spacing, and location of manholes and other operating features are, to some extent, a matter of judgment. In general, Wheeler manholes are installed opposite each service gallery or group of service outlets if the gallery is continuous. The manhole will be best placed adjacent to the outer crane rail. The latest experiences with the newest installations should be investigated.

8-4.9 **Oxygen and Acetylene**. Oxygen and acetylene are required for cutting metals, brazing, heating, and welding operations. Graving docks are, for the most part, not equipped with a central oxygen and acetylene distribution system, and consequently are supplied from individual portable tanks (bottles or cylinders). The provision of a central distribution system should be considered in a new dock construction and in existing docks where large quantities of these gases are required. If distribution systems are planned, use the criteria below.

8-4.9.1 **Location of Piping**. Never run mains for these gases in a pipe tunnel or an enclosed or partly enclosed service gallery, because of the extreme hazard involved. Locate both mains and outlets above extreme high water to prevent contact with oil floating on the water surface during flooding of the dock. Mains are best located in a special open slot formed as an integral part of the coping curb, or placed on the wall of the dock below the coping elevation, and protected from damage by a heavy fender member.

Place service outlets under open protective hoods above the coping level or on the inner faces of the coping line. Temporary connections to the dock floor may be made after each dewatering if distribution to the floor level is required.

8-4.9.2 **Oxygen**. For oxygen piping, use standard weight, black steel, seamless tubing with beveled ends for welding. Pipe should be factory washed.

8-4.9.2.1 **Sizes**. Generally, provide these ranges of sizes:

- main from supply to side of dock, 50.8-76.2 mm (2 or 3 in),

- distribution piping around the dock, 44.5- 63.5 mm (1-3/4 to 2-1/2 in), and
- extensions to outlets 19.05-25.4 mm (¾ to 1 in)

It is standard practice to reduce the pipe size serving the more remote outlets in accordance with the reduction in volume of gas to be delivered.

8-4.9.2.2 **Valves**. Use globe type shutoff valves, 2,758 kPa (400 psi), cold, nonshock gas working pressure. Prefabricate valve assemblies in the shop to minimize the possibility of leakage after fabrication.

8-4.9.2.3 **Joints**. Use tinned threaded joints, made up with litharge and glycerine.

8-4.9.2.4 **Testing**. Before outlets are attached, subject each section of line to an air test at 861.84 kPa (125 psi).

8-4.9.2.5 **Identification**. Paint oxygen piping green and mark outlet valves “FOR OXYGEN.”

8-4.9.3 **Acetylene**. For acetylene piping, use standard weight, black steel with beveled ends for welding.

8-4.9.3.1 **Sizes**. Generally provide these ranges of sizes:

- main from supply to side of deck, 38.1 to 63.5 (1-1/2 to 2-1/2 in)
- distribution piping around the dock, 25.4 to 50.8 mm (1 to 2 in), and
- extensions to outlets, 19.05 to 25.4 mm (¾ to 1 in.)

8-4.9.3.2 **Valves**. Use forged or cast steel of the lubricated plug type cutoff valves.

8-4.9.3.3 **Testing**. After fabrication, but before attaching outlet equipment, test each section of line with compressed air to 689.47 kPa (100 psi).

8-4.9.3.4 **Identification**. Paint acetylene piping yellow and mark the outlet valves “FOR ACETYLENE.”

8-4.9.4 **Supply**. If not supplied in portable tanks, the required supply of oxygen and acetylene may come from an existing yard system or be produced by stationary generators.

8-4.9.4.1 **Alternate System**. If an existing system is not available, the choice between installation of stationary generators or banks of tanks will depend on the volume of gases required, estimated on both daily and weekly consumption rate. Where an appreciable volume of gas is required per week, it may be produced by stationary generators more economically than if supplied by tanks.

8-4.9.4.2 **Building Design**. Buildings housing either tanks or generators should be of light steel construction and located at least 15.24 m (50 ft) from any adjacent structure or operation.

8-5 ELECTRICAL SERVICES

8-5.1 **Electrical Conduits**. Keep electrical circuits separate from service piping. They may be placed in concrete encased ducts behind the dock wall or, for large drydocks, in a separate tunnel shoreward from the pipe tunnel or gallery. Secondary electric power distribution lines are sometimes placed in supplementary utility tunnels, separate from immediate drydock outlet system.

8-5.1.1 **Support**. Wherever electric cables in underground installations are mounted on wall racks, support the cables away from the wall to allow leakage water to pass by.

8-5.2 **Substations**. One or more electrical substations are required to provide for conversion and distribution of electricity at the required voltages and capacities for ship services, and for operation of dock supporting facilities. Use mobile or portable transformer units to supply occasional high demand loads, and for testing nuclear vessels. Provide suitable protected primary feeder terminations at appropriate locations for portable design guidance. Mobile or portable transformer units should have a primary fused switch and a secondary panelboard with circuit breaker protection, and suitable numbers of 3-pole 400-ampere receptacles mounted on the transformer unit.

Two feeders should be run to the pumphouse, in the event that the main feeder goes down. They should be fed from two separate power sources.

Install a back-up emergency diesel generator near each pumphouse to run at least the drainage pumps and alarms in the event all electrical power is lost.

8-5.2.1 **Design**. A single substation may be incorporated into the pumpwell machinery room or, for a large drydock, one may be required on each side of the drydock, and not necessarily in the pumpwell machinery room.

8-5.2.2 **Power Service Outlets**. Power must be conducted from the substation to dockside capstans, lights, and other necessary outlets, through cables in ducts run from manhole to manhole. The outlets should be weathertight and above mean high water. Make provision for draining this secondary underground electric distribution system. Refer to MIL-HDBK-1025/2 *Dockside Utilities* criteria for outlets for ship services and portable equipment, and recommended design of electrical distribution systems.

8-5.3 **Power Uses**. Electric power is required for the following:

- Pumps.
- Sluice gates and valves.

- Capstans and winches.
- Lighting (drydock, laydown area and pumphouse).
- Ship services.
- Telephones.
- Alarm systems.
- Control systems.
- Welding machines.
- Battery charging (for some submarine requirements).
- Heating, ventilating fans and air conditioning.
- Caisson.
- Elevators.

8-5.4 **Methods of Installation**. Install outlets for servicing the vessels in the galleries on the sides of the dock, with other services. Carefully place outlets to facilitate connecting ships to the shore cables. All outlets, if subject to flooding, must be the watertight receptacle type. Provide a grounding system with connections in each service gallery.

8-5.5 **Power Requirements**. Estimation of total power requirement calls for a careful analysis of the occurrence of simultaneous power uses listed in section 8-5.3.

8-5.5.1 **Individual Requirements**. Correlate individual requirements by preparing a schedule of probability of usage. For assistance in formulating a schedule, refer to MIL-HDBK-1025/2 *Dockside Utilities* that shows ship service power and welding requirements for the various classes of vessels. These values are only indicative of range, and may be influenced by special requirements peculiar to any given installation. Meet the direct current welding requirement with portable converters rather than a fixed direct current bus system.

8-5.5.2 **Special Requirements**. The project scope will specify any special requirements, such as battery charging. The total requirements for the electrically supplied supporting facilities must be estimated from the final design capacity of various installations.

8-5.6 **Pumping Plant**. All electrical equipment in pumping plants must be a type suitable for installation in damp, humid atmospheres. Provide electrical heaters in large motors and switchgear to minimize condensation. The power distribution equipment should be a coordinated assembly of switchgear. Assemble the controls for

all pumps, gates and valves, and the valve position indicators in a suitable panel or benchboard unit.

8-5.6.1 **Power Demand Range**. The following tabulation presents probable range of electrical power demand for pumping the several classes of graving docks. These figures may be used for preliminary purposes of study and/or design, but are only indicative of the ranges to be expected.

Class of dock	Range of kW demand
Submarine	750 to 1,250
Destroyer or frigate	950 to 1,300
Cruiser	1,300 to 3,000
Carrier & Auxiliary	3,500 to 5,000

8-5.6.2 **Main Pump Motors**. Main pump motors should generally be of the wound rotor induction type, with starting resistance steps provided in the secondary windings, except where variable pitch impeller type pumps are used. In this latter case, use synchronous motors with reduced voltage starting where required. In general, operate these motors on a minimum of 2,400 volts, and at greater voltage where economically sound. Use drip-proof construction, and provide space heaters to heat the windings to approximately 15 degrees C (5 degrees F) above the ambient room temperature whenever the motor is disconnected from its voltage supply.

8-5.6.3 **Drainage Pump Motors**. Drainage pump motors should be of the squirrel cage induction type, operated at 460 volts and at higher voltage where economically sound. Provide reduced voltage starting when required by design conditions. Provide dripproof construction and space heaters for the windings of the pump motors.

8-5.6.4 **Other Motors**. Provide sump pumps, sluice gates, gate valves, sewage pumps, and ventilation fans with squirrel cage induction motors operating at 460 volts. Motors should be dripproof or totally enclosed.

8-5.6.5 **Switchgear**. Install high voltage protection and distribution equipment in a steel-enclosed, dead front assembly of switchgear. Carefully coordinate interrupting ratings of the gear with the systems to which connection is to be made. Construction should be dripproof, and space heaters should be provided to maintain the compartments of the switchgear approximately 15 degrees C (5 degrees F) above the ambient room temperature when the pumping plant is not in use.

8-5.6.6 **Grounding**. Provide grounding systems for all electrical equipment frames, enclosures, and conduit systems.

8-5.6.7 **Control Voltage**. Control voltage for all electrical equipment should be either 115 or 230 volts.

8-5.6.8 **Control Panel**. Assemble pushbuttons and indicating lights for all pumps, gates, and valves (in addition to the synchronous position indicator for each valve and the drydock water level indicator) on a steel control panel or benchboard type structure. Provide motor control on or adjacent to the starting equipment for each motor.

8-5.6.9 **Lighting**. Provide vaporproof lamp fixtures, equipped with reflectors. Provide receptacle outlets at strategic locations for use during repair and inspection.

8-5.6.10 **Telephone**. Provide telephone outlets at or near the control panels.

8-5.6.11 **Installation**. All electrical installation should be in accordance with the requirements of NFPA Standard No. 70, *National Electrical Code*. Use rigid steel type conduit. Use cables in accordance with the latest revisions of LANTNAVFACENGCOM UFGS-L-16303, *Underground Electrical Work*, and Uniform Facilities Guide Specifications UFGS-16000 series.

8-5.7 **Dock Services**. Services are required as described in sections 8-5.7.1 through 8-5.7.5, as specified.

8-5.7.1 **Ship Services (Hotel)**. Power for ship services is supplied to provide the living requirements of the ship's crew, and includes loads such as lighting, cooking, pumps, fans, and other equipment. Current characteristics of the system must be the same as that of the ship supplied. Power is taken to the ship with portable cables, and connected to its electrical system through a connection box at one of the service outlets approximately midway of the vessel.

8-5.7.2 **Temporary Lighting and Power**. Design temporary lighting and power systems to supply 120-volt, 3-phase power for portable tools, lights, blowers, and other equipment used aboard the ship for repair. Supply 25 percent of the total power required from a permanent 120-volt, 3-phase ungrounded system, and connected to the 460-volt service outlets.

8-5.7.3 **Welding**. Provide welding service by both single and multi-operator welding sets. The multi-operator sets are generally placed on shore, and single operator sets are placed on board ship or, if space permits, on shore. Large size welding sets are motor driven. The small sizes are either motor generator or static types. All types should be 460-volt operated. The base welding power should provide 75 percent of the total demand, and the single operator placed either aboard ship or on shore should supply 25 percent of the total demand.

8-5.7.3.1 **Distribution**. When space is available, use welding manholes for the distribution of welding power. They should be located opposite each service outlet group beyond the crane tracks. The purpose of the manholes is to provide means of connecting the portable welders that are to supply power to adjacent work areas and to

the service galleries for use aboard ship. Provide receptacles for connecting the welding sets. Provide welding outlets at the welding manhole and service galleries.

8-5.7.3.2 **Wiring**. Install permanent wiring between the manhole and the service outlets. Provide receptacles for 120-volt, 3-phase service for temporary lighting and power at all welding manholes.

8-5.7.3.3 **Alternate Distribution**. If space does not permit the use of welding manholes, install welding generators in a centrally located permanent building, and the welding power distributed radially to the service galleries.

8-5.7.4 **Fire Alarm Service**. For fire alarm system design and installation, refer to MIL-HDBK-1008C, *Fire Protection for Facilities Engineering, Design, and Construction*.

8-5.7.5 **Lighting**. All lights in the drydock should be centrally controlled and the lighting intensity on the work surface should be not less than 107.6 lux (10 footcandles.)

8-5.7.5.1 **Night Lighting**. Provide adequate lighting on the walls of the drydock for night work and, for daylight work, in high sidewall drydocks where daylight lighting is often impaired.

8-5.7.5.1.1 **Types**. These lights may be of the submersible or nonsubmersible type. If the latter, they must be kept above the dock flooding level. If of the former type, they may be placed at a lower level, and sometimes at two levels for deeper docks.

8-5.7.5.1.2 **Location**. Place lights on mounts to permit training and elevating, and locate at suitable intervals horizontally. They must be placed in niches or protected by cages.

8-5.7.5.2 **Floodlighting**. Fabrication and material storage areas around the dock generally are lighted by banks of floodlights mounted on portable or fixed towers, or on sides of buildings. The lighting intensity for these areas should be about 107.6 lux (10 footcandles.) Portable towers may be connected to receptacles in the welding manholes for large docks. Provide weatherproof receptacles on concrete or metal pedestals for the smaller docks and for areas beyond the welding manholes.

CHAPTER 9

ENTRANCE CLOSURES

9-1 **SELECTION**. This chapter contains basic data for criteria to design and construct entrance closures, including various types of gates and caissons. Advantages and disadvantages of each type are discussed.

9-1.1 **Requirements**. Basic requirements in the choice of entrance closure are reasonable initial costs, ease and rapidity of control, low maintenance, and feasibility of traffic movements across the top.

9-1.2 **Types**. A review of available types reveals why floating caissons have been adopted as standard for Navy drydocks. Other types may be suitable for smaller, temporary, nonmilitary drydocks.

9-1.2.1 **Miter Gates**. Miter gates were probably the first satisfactory mechanical gates. Each closure consists of a pair of gate leaves, hinged at the dock walls, swinging horizontally so when closed the free ends meet in fitted contact. Gates are moved by means of a hawser to a nearby power capstan. The sides and bottoms bear against seats in the drydock walls and floor. This type of gate is especially suitable for timber construction; however, they are now made of steel. These gates have the following disadvantages:

- Heavy loads on wall supports. Although loads can be relieved by roller and track arrangements, these are not satisfactory for operational and maintenance reasons. The same objections apply to relief of loads by controlled buoyancy in the gates.

- Required operating mechanism is costly, susceptible to breakdown, and requires constant maintenance.

- Major repairs are difficult, due to necessary removal of the gates and inaccessibility of major features.

- Recesses must be built into dock walls to maintain ship clearances with open gates. This construction adds to the length and complexity of a drydock structure.

9-1.2.2 **Flap Gates**. A flap gate is a rigid, one-piece gate hinged at its bottom, and swinging downward and outward. It is a compartmented structure with means for varying its buoyancy for raising and lowering. Although this type of gate does not impose such severe loads on the hinges as the miter gates, it has similar disadvantages except those of recesses. Means must be provided to support a gate when down in open position.

9-1.2.3 **Set-in-Place Gates**. Set-in-place gates are in various forms, and may be built in one piece or multiple sections. They are of beam and plate construction, with

reactions carried to the walls by girders and to the floor by beams. These gates are extensively used for small docks. Since their placement and removal must be done by weight handling equipment, the sizes of cranes required for naval drydock closures makes this type of closure unpractical.

9-1.2.4 **Foster Hinged Gate**. This type of gate is a patented commercial device developed by C. J. Foster, Inc. It is a structure which folds and which does not require transverse girders between the sidewalls of the dock. It can be designed for unlimited widths and depths to suit dock conditions. Reaction due to water pressure on the gate is distributed to the floor slab of the dock. Massive abutments are not required to support the ends of the gate.

9-1.2.5 **Sliding and Rolling Caissons**. These types are built-in box shapes, mounted on hardwood sliding surfaces or metal rollers that move them into or out of place. They may be equipped with air chambers for buoyancy which reduce the work of moving. They have some advantages of a floating caisson, but require expensive recesses in dock walls for stowage. Cleaning and maintenance of the roller or slide paths are difficult.

9-1.2.6 **Floating Caissons**. Floating caissons are watertight structures with flooding and dewatering systems for operation. For design of hull, floating stability, and all operational purposes, they are symmetrical both transversely and longitudinally.

9-1.2.6.1 **Advantages**

- The cost is reasonable since practically all of the hull elements function structurally.
- A caisson may be handled easily and is seaworthy for towing to other sites (to another drydock for repair) or from its construction site to point of use.
- It may be used at more than one seat in the same drydock.
- Its symmetrical form allows reversibility with either side toward the dock chamber, permitting maintenance and repair on exposed side.

9-1.2.6.2 **Disadvantages**

- The time for closing and opening the dock entrance is slower than for other types of closures.
- Because of shore service connections (electric and sometimes air), it is not operative too far from the caisson seat.

9-2 DESIGN OF FLOATING CAISSONS

9-2.1 **Application**. Comparison of the attributes of various types of entrance closures leads to the exclusive choice of floating caissons for Navy drydocks. The

following paragraphs describe types of floating caissons, their operation, and materials of construction.

9-2.2 **Requirements**. Caissons must allow reasonably rapid opening and closing of the dock entrance at any tide stage, be stable transversely and longitudinally at any draft, have strength and other characteristics to resist water pressure, and provide watertight seal when seated.

9-2.3 **Types**. Floating caissons are usually one of the four types described below.

9-2.3.1 **Ship Type Caisson**. This type has a faired shape similar to the lines of a ship. The required curvatures for frames and plates make the construction uneconomical, and it is now outmoded.

9-2.3.2 **Hydrometer Type**. This type has a narrow width over as much of the height as possible between its waterline at extreme light draft when afloat and its waterline at mean high water when seated. This reduces the amount of adjusted water ballast during lowering and raising for seating and unseating operations.

9-2.3.3 **Box Type**. This type is constructed in the shape of a box, with vertical or sloped ends to suit the seat shape. The girder ends project from the box to bear against the seats built in the dock side walls.

9-2.3.4 **Rectangular Type**. This type is similar to the box type. It has simplified internal and external welded construction. All body girders and breasthooks are completely enclosed by the plating. All modern designs have been of this type.

9-2.4 **Ballast Control**. The draft of caissons is adjusted for seating, unseating, and towing by flooding or pumping out water ballast. (Refer to section 9-2.7 for machinery for ballast control.).

9-2.5 **Operation**. Operation is functional as applied to the design objectives. Detailed operational instructions must be supplied for each installation but are, in general, as described in sections 9-2.5.1 and 9-2.5.2.

9-2.5.1 **Opening the Entrance**. To open the entrance, the procedure is as follows:

- In preparation for lifting the caisson from its seat, the water level inside the graving dock must be raised to the water level outboard the caisson, by flooding the dock chamber.

- Caisson dewatering pumps are started; then with the discharge valves open and sufficient water ballast removed, the caisson floats off the seat. Pumping is continued until desired draft is obtained. The caisson in operation is very rarely pumped up to light draft. For air operated

caissons, compressed air is introduced to expel ballast water, in lieu of pumping.

- After the discharge valves are closed and secured, and the machinery is shut down, the caisson is warped out of the graving dock entrance channel limits by capstans and/or tugs. The caisson weather deck is fitted with chocks, bitts, and cleats for line attachment.

9-2.5.2 **Closing the Entrance**. To close the entrance, the opening operation is reversed, except that ballast tanks are filled by opening flooding valves to let in water. For air-operated caissons, compressed air must be released in order to admit the ballast water. During submergence, the caisson must be positioned correctly with respect to seats, and must have negligible list or trim.

9-2.6 **Materials of Construction**. Modern caissons are built of welded steel. Some spare caissons are constructed of reinforced concrete.

9-2.7 **Machinery**. The main machinery of a floating caisson consists of dewatering pumps or compressed air system and flooding, dewatering, and equalizing valves to control the water ballast. Design the ballast control system so that complete control of trim may be maintained during submerging and raising operations. The pumps are driven by electric motors powered through cables attached to shore connections located near the caisson seat at coping. Compressed air, when used, is also obtained from shore connections, through air hose.

9-2.7.1 **Auxiliary Machinery**. Auxiliary machinery may include electric fans, motorized drydock flooding valves, and an air compressor. When a drydock is flooded through the caisson, two valves in each flooding tube are required for double valve protection.

9-3 DESIGN OF BOX TYPE FLOATING CAISSONS

9-3.1 **Shape**. Since construction of caissons is not sufficiently repetitive, definitive drawings have not been prepared. However, detailed design drawings of modern caissons are available in the Naval Facilities Engineering Service Center (NFESC), and may be obtained on request.

9-3.1.1 **Elevation**. In elevation, the shape of a caisson must conform to the shape of the seats in the drydock walls, which have been dimensioned to provide the required ship clearances.

9-3.1.2 **Height**. The elevation of the caisson weather deck should be approximately the same as the drydock coping.

9-3.1.3 **Cross Section**. For a typical caisson crosssection, see Figure 9-1. Determine beam by strength and stability requirements. Slope the bottom and sides from the stems and keel at an angle of approximately 45 degrees, to meet the beam

width. Slope the sides slightly inward at the top, but maintain requirements for roadway and deck layout.

9-3.1.4 **Plan**. Make the structure symmetrical about both axes. See Figure 9-2.

9-3.2 **Ballast**. Ballast is used to control the caisson draft and stability.

9-3.2.1 **Fixed Ballast**. Fixed ballast is required to insure stability under all operating conditions. Fixed ballast at the bottom of a caisson is concrete, with steel punchings as additional aggregate. Quantity of fixed ballast is determined by the minimum draft and stability requirements. The minimum draft of a floating caisson must be such that it can be raised from the sill or seated at mean lower low water.

9-3.2.2 **Water Ballast**. The maximum draft of a caisson occurs while the caisson is being seated at extreme high water. As a general rule, caissons are designed to allow for seating at mean high water, and the safety deck is located, and dip pipes proportioned, to suit this condition.

9-3.2.2.1 **Location**. The locations of safety decks depend on necessary water ballast, adaptability to framing arrangements, and required headroom for machinery. There are advantages to raising the safety deck higher over the end trim tanks than over the center tanks of the caisson because it allows use of shorter pump shafts and valve stems. Locate safety decks at elevations higher than those indicated by computations.

9-3.2.2.2 **Dip Pipes**. Provide dip pipes in each water ballast compartment to limit ballast water to design level. Dip pipes serve as vents until ballast water reaches the pipe ends. These pipes are extra long, and cut off to the elevation determined by submergence tests.

9-3.3 **Design Analysis**. To resist external water pressure when a caisson is seated and the dock is empty, consider the caisson closure as a rectangular slab supported at side and bottom edges with free top edge. Assume outside water level reaches the caisson top.

Fig. 9-1 Cross Section and Typical Framing Arrangement of Welded Caisson

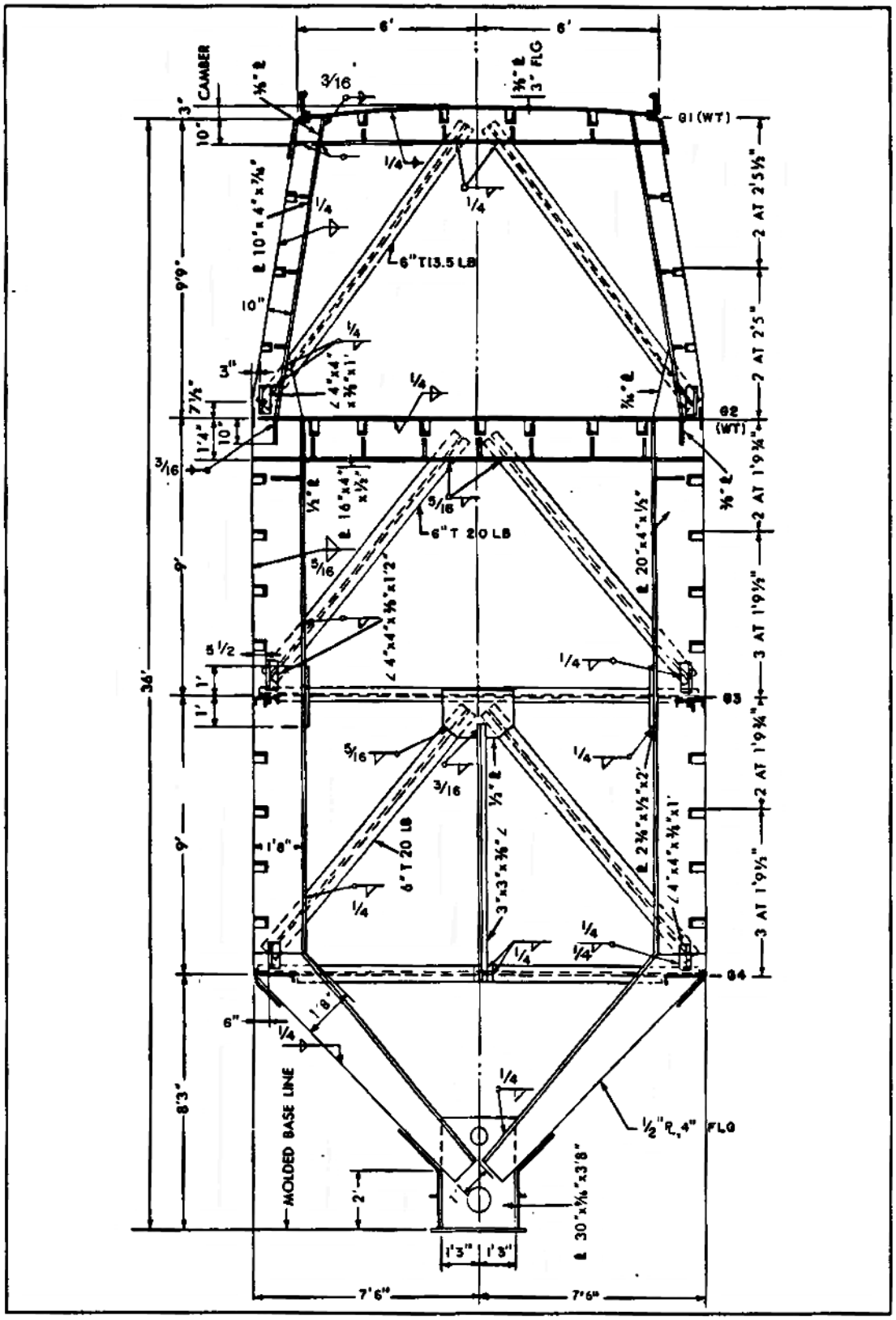

Fig. 9-2 Typical Horizontal Girder for Welded Caisson

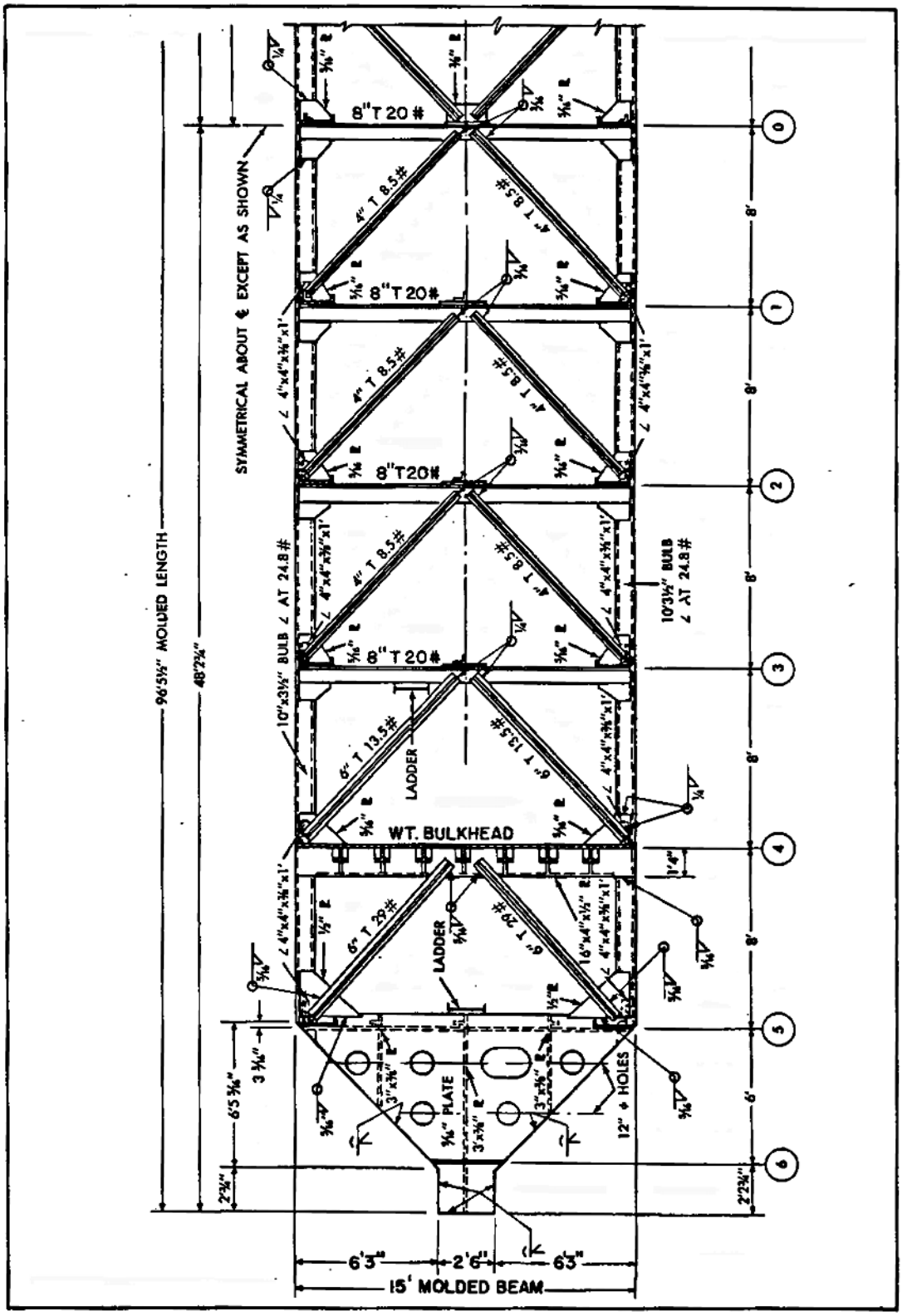

9-3.3.1 **Approximate Analysis**. For approximate determinations of principal moments, shears, and reactions, assume the design length as a mean of the top and keel lengths and apply elastic theory for a rectangular plate supported on three sides. Determine also the distribution of shears and moments in individual frames and girders, stiffeners, and plating.

9-3.3.2 **Framing**. Main framing should consist of a series of vertical trusses or frames attached to horizontal girders or frames at panel points. Make a bulkhead frame near each end watertight for trim tanks. Only the safety and weather deck horizontal girders are made watertight. Space vertical frames about 2.44 m (8 ft) on centers, with spacing of horizontal girders preferably not exceeding 3.05 m (10 ft). Place short intermediate horizontal girders, usually called breasthooks, in the upper half near the caisson ends, for better distribution of shears and end reactions.

9-3.3.2.1 **Vertical Frames**. For construction details, see Figure 9-1.

Design as follows:

- Design vertical frames to resist caisson shears and bending moments in vertical directions and local bending between girders. The part of the total vertical caisson bending moment applicable to a frame is determined from the approximate analysis (refer to section 9-3.3.1). Chord stresses are determined by beam analysis.

- Local bending moments between girders on the outboard side result from water pressure loads brought to the vertical frames by hull plating and stringers.

- Web member stresses are found by assuming the distributed vertical pressure loadings to be concentrated at panel points and computing the consequent shears.

- Design for stresses caused by internal air pressure in air

- Operated caissons.

- Diagonal web members should preferably be tee sections; horizontal strut members angle sections; and chord members wide angle sections formed by bent plates or a web plate with a welded flange.

- Web member connections should be fillet welded.

9-3.3.2.2 **Horizontal Girders**. See Figure 9-2 for details of a typical girder. Design as follows:

- Design horizontal girders similarly to vertical frames. In general, they are the same type of construction.

- Girder flanges should be combination tee and wide-angle sections and, for computing stresses from girder action, include all adjacent hull plating.
- Members of safety and top decks must resist local loads introduced by secondary framing and deck plating at those locations.
- Webs at the girder ends are longitudinally stiffened plating for required shear resistance.
- Weather decks should be cambered to provide drainage and designed for specified uniform live loadings and concentrated vehicular loads normal to the girder plane.
- Design safety decks for water pressures, machinery loads, and air pressure if the caisson is air operated.

9-3.3.2.3 **Secondary Framing**. Make shell plate stringers of serrated channels or angles running horizontally. At keel, provide web plate stiffeners in a vertical direction, spaced about 0.6 m (2 ft) on centers, between vertical frames. Design stringers as continuous beams to resist local water pressure transmitted by plating. Stringers for both weather and safety decks should run in the long direction of the caisson, and should consist of serrated channels. Design them as continuous beams.

9-3.3.2.4 **Plating**. Stresses in shell plating are biaxial, due to bending in two directions. Determine maximum stresses in plating by combining stresses from overall bending and twisting of the caisson and bending stresses from local water pressure loading. Assume twisting moments resisted only by shearing stresses in the plating. Determine principal stresses by combining shear resulting from twisting, stresses produced by bending in both vertical and horizontal directions, and stresses due to local bending. Increase the design plate thicknesses by 1.59 mm (1/16 in) to allow for corrosion loss.

9-3.3.2.5 **Stems and Keels**. Stems and keels distribute hydrostatic pressures on caissons to the masonry of drydock seats. Keels are to be filled solid with concrete ballast, and stiffened with diaphragm plates.

9-3.3.3 **Gaskets and Seats**. The bearing of caisson ends and keel is taken through special molded, steel reinforced, rubber seals set on both faces of caisson keel and stem. Contact Naval Facilities Engineering Service Center for details. See Figure 9-3.

9-3.3.3.1 **Graving Drydock Seats**. For cruiser, auxiliary and carrier docks, build recesses into the drydock entrance floor 0.6 m (2 ft) and into the drydock entrance side walls 0.76 m (2 ft 6 in), to form docking seats. For destroyer and submarine docks, these depths may be decreased respectively 152.4 mm (6 in.)

9-3.3.3.2 **Superflooding Feature**. For drydock designs including the superflooding feature, face the drydock seat recesses inboard and outboard to provide bearing reaction from either direction (refer to Chapter 6).

9-3.3.4 **Alternate Gaskets and Seats**. The bearing of caisson ends and keel is taken through special timber bearing blocks set on both faces of caisson keel and stem. Rubber gaskets are set into the bearing blocks so that, when not under pressure, the gaskets project beyond the block faces. Use white oak or greenheart for timber bearing blocks. When pressure is applied, they compress to form watertight seals. The timber bearing blocks in this seat design are subject to marine borer attack and decay. This type of gasket and seat should not be used in locations where marine borer attack of immersed timber is a problem. See Figure 9-3

9-3.4 **Equipment**. Mechanical and electrical equipment must conform to the same specifications as the corresponding equipment in the drydock pumpwell.

9-3.4.1 **Major Equipment**. Provide the following major items of equipment. Each system (caisson tank flooding, caisson tank dewatering, drydock flooding, etc.) must consist of at least two parallel and independent systems for redundancy:

- Vertical shaft pumping units as required. Control by start-stop pushbutton mounted on or near the floor stand and/or at the control console.
- Gate valves of rising stem type or butterfly valves as required for water control. Use motor operated, except for small valves which may be hand operated. Provide sea connection with screens and gratings.
- Check valves in discharge pipes of main pump units.
- Inclinometers of suitable type to show both list and trim.
- Gages for indicating the water level in each ballast compartment and draft. Float type rather than pressure type are necessary in air-operated caissons due to high air pressure used in blowing out the tanks.
- Heating and ventilating systems to suit climatic conditions.
- Dock flooding via piping through the caisson and 76.2-mm (30-in) valves with controls. Two valves are required in each pipe. Use valves suitable for pressure from both sides to accomodate rotation of the caisson. Locate pipes high enough to avoid sucking mud and debris on the harbor bottom into the pipes. Consideration should be given to angling the ends of pipes down to prevent the movement of ship blocking. Install flanges on the caisson shell on both sides of the caisson to facilitate the installation of blanks over the pipes. Refer to Chapter 6.

9-3.4.2 **Electrical Equipment**. Supply 460 volts, 3-phase, 60 Hertz per second electric current from the drydock system to shore connection receptacles on the

caisson. Operate main motors at 460 volts. Operate heater and fan motors on 120 volts, obtained from a transformer provided in each starter. Operate lights and convenience receptacles on 120 volts, obtained from 460/ 120-volt transformers. Provide controls, circuit breakers, and similar items, as necessary.

9-3.4.3 **Ballast Tank Alarms**. Provide high and low water alarms for the main ballast tanks. Alarms should annunciate either in a space that is continuously manned or on the caisson weather deck.

9-3.4.4 **Miscellaneous Fittings**. The following miscellaneous fittings are required:

- Companionway ladder or ladders with railings.
- Vertical fenders to ballast compartments.
- Timber fenders both sides of hull.
- Cast steel chocks, cleats, and double bitts.
- Non-skid surfacing on weather deck. Do not use a bituminous surface.
- Hinged or portable ramps (where required) for providing pedestrian access or vehicular access to roadway on caisson.
- Curb lights.
- Hand railing (galvanized or other corrosion resistance).
- Access manholes and machinery hatches.
- Capstan installations for line handling and warping out of and into drydock seat or to mooring location.
- Visible and audible water alarm on weather deck.

9-3 Detail of Gasket for Caisson

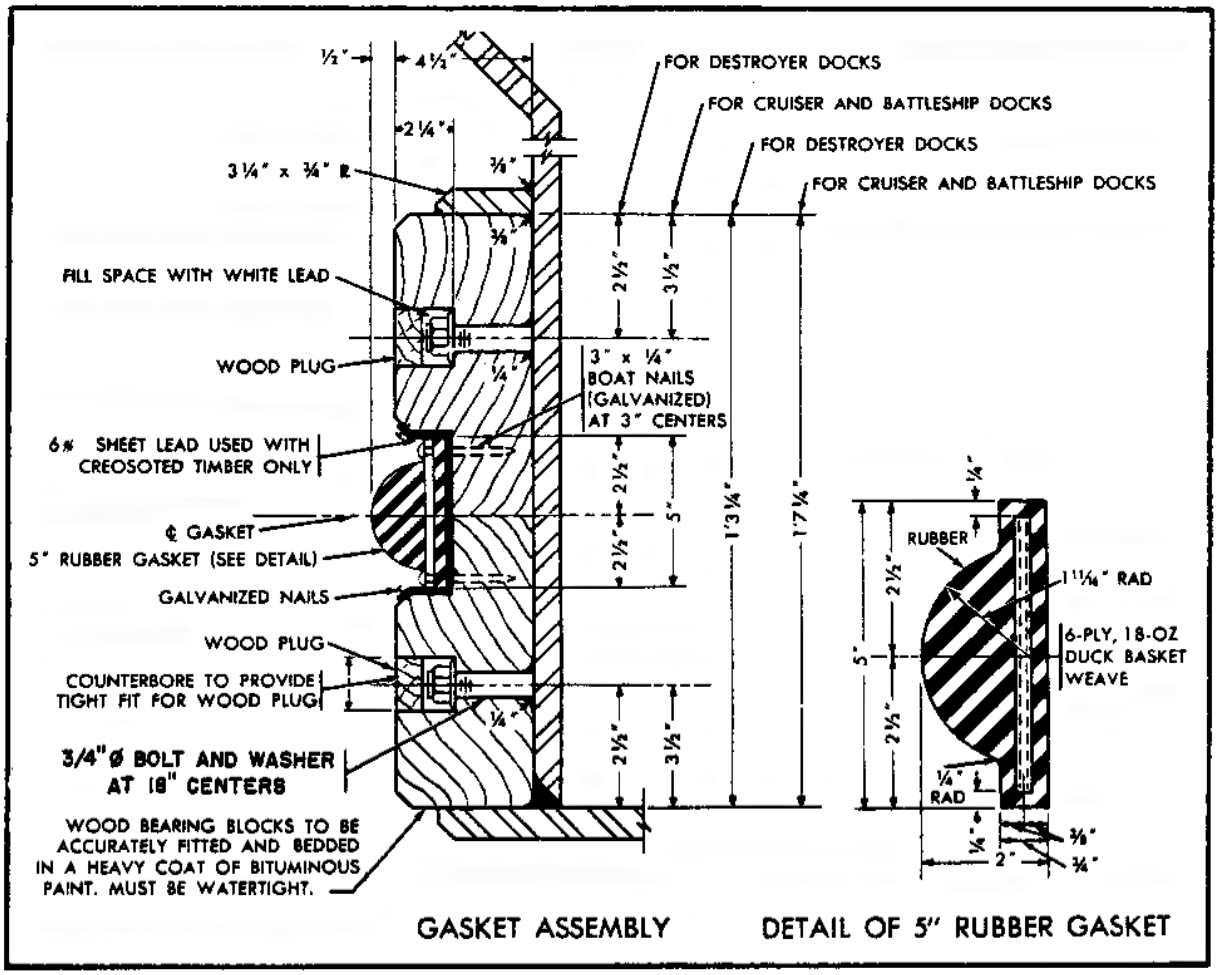

CHAPTER 10

CONSTRUCTION

10-1 **CRITERIA**. This chapter presents data and information as criteria for the construction of a drydock body, the entrance closure, supporting facilities and accessories, and mechanical and electrical equipment.

10-1.1 **Approach**. Criteria for the drydock body are intended to guide the designer by indicating basic construction problems encountered, depending on the type of drydock chosen. They are also intended to assist in the preparation of construction specifications as well as design drawings. References to construction of the drydock body are based on the use of concrete. Phases of construction are presented in chronological order of the work.

10-2 DRYDOCK BODY

10.2.1 **Clearing and Demolition**. A site must be cleared of all interfering structures above and below water. Dispose of removed material according to contract requirements. Remove all objects that will interfere with excavation.

10-2.2 **Rerouting Utility Lines**. Essential mechanical and electrical services that will be interrupted by construction work must be rerouted before demolition. Possible extensions of the services to the new drydock, when completed, must be considered in rerouting.

10-2.3 **Excavation**. Excavation is the first major step in the construction of a drydock. It is necessary to make room for construction of the drydock body, and often the removal of unsuitable foundation materials is required. Excavation may be done by dredging or in the dry, depending on the type of material, method of dewatering, or intention to construct the drydock by underwater methods. Dredging is generally the most economical method.

10-2.3.1 **Dredging**. A Department of the Army, Corps of Engineers permit must be obtained for dredging work in navigable waters and material disposal. Dredging may be done by hydraulic methods, or mechanical methods such as clamshell bucket or dragline. If soil is removed by hydraulic dredging, it may be piped to approved disposal areas, to yard locations for fill, or to stockpiles for future use. If dredging is done by clamshell or dragline, the removed soil must be barged to a disposal point.

Hydraulic dredging is not feasible for certain soils such as stiff clays or those containing boulders or rock. Blasting may be necessary for very hard materials, after which a clamshell or dragline is used for its removal. For additional information on dredging operations, refer to UFC 4-150-06 *Military Harbors and Coastal Facilities*.

10-2.3.2 **Water Removal**. If water can be removed and kept excluded from a site with reasonable effort, construct drydocks in the dry. This method affords the greatest economies in material and the best quality of completed construction. The method of

handling water percolation depends on the type of enclosure and on the nature of surrounding and underlying soils. For drydocks constructed in the dry, continued exclusion of water is most important. (Refer to sectionh 10-2.4.)

10-2.3.3 **Dry Excavation**. For hard materials, dry excavation is preferred. Where dewatering a site must be done by tiers of well points, excavation in the dry is initiated after the water table in the bank has been lowered. Excavation in the dry may be done by power shovels, draglines, clamshells, bulldozers, tractor drawn pans, or combinations of these methods.

10-2.3.4 **Fine Grading**. Fine grading is done by hand tools, bulldozers and scrapers. Replace over-excavation by well-consolidated material or lean concrete.

10-2.4 **Cofferdams**. Cofferdams usually consist of sheet pile or earth structures, or both combined. The function of a cofferdam is to surround a site and to cut off, or minimize, water inflow. Portions of a cofferdam may become permanent parts of the finished drydock. At the drydock entrance end, a cofferdam must be removable to allow access for vessels when the drydock is in operation. There are several types of cofferdams, four of which are described in section 10-2.4.1 through 10-2.4.4.

10-2.4.1 **Excavated Pit Cofferdam**. Where most of a drydock is on land, and the soil in the area is sufficiently impervious and mostly of granular character, a hole may be dug and dewatered by means of well points or deep wells, or a combination of both.

10-2.4.1.1 **Entrance Closure**. The entrance closure may be an earth-dike, with or without a line of sheet pile cutoff, or it may consist of a line of earth filled sheet pile cells.

10-2.4.1.2 **Clay and Rock Foundations**. The open pit method is generally not suitable for clays. Refer to *American Civil Engineering Practice, Volume II*, for examples of this type. Drydocks built in rock fall into this category, except that water influx is usually small and can be collected in sumps to be pumped out by conventional pumps, see (d) of Figure 3-3.

10-2.4.2 **Earth Dike Cofferdam**. If suitable foundation and borrow material is available, a simple earth dike may suffice to exclude water from a site, even where drydocks will be located well out in the water. Usually, however, a sheet pile cutoff is provided as a dike core. Where sheet pile cutoffs can penetrate to impervious material, earth dikes are ideal. Where earth dikes are used, also provide for lowering the water table by well points and/or deep wells. For an example of a drydock constructed with this type of cofferdam, see (e) of Figure 3-3.

10-2.4.3 **Cellular Sheet Pile Cofferdam**. For particularly unfavorable soil conditions (for example, where embankment material in place, or available, is very pervious or otherwise unsuitable), a continuous wall of cellular sheet piles may be used to enclose an entire drydock site. Normally, do not choose this type of construction because the cost is relatively high. This method may prove feasible for shipbuilding docks of semi-permanent character where sheet pile cells become incorporated into the dock structure. See (a) of Figure 4-1.

10-2.4.4 **Internally Braced Sheet Pile Cofferdam**. The use of this type depends on special foundation conditions. The bottom must be relatively impervious and must have the strength to resist a blow. One example of this type of bottom is firm clay into which sheet piles can be driven to a substantial depth for cutoff. The clay must be firm enough so that the depth of material surrounded by the sheet piles has sufficient strength to resist uplift. Design as follows:

- Refer to DM-7.02 *Foundations and Earth Structures* for design data on internally braced cofferdams.
- Sheet piles of the Z-type are usually used because of the high ratio of rigidity to weight.
- Internal bracing must be placed in two directions and in vertical tiers spaced to accommodate the strength of sheet piles. Wales and struts may be of wood or steel or a combination of both. Steel is usually required below the top tier.

10-2.5 **Foundation Piles**. Piles may be required to help support drydock structures constructed on weak soil types. They may also be used to help hold down a drydock floor slab against uplift pressures. Piles may be needed for track and capstan supports.

10-2.5.1 **Types**. Piles may be of wood, steel, or concrete. Wood piles, not completely covered, must be treated. Steel piles are not generally used, unless each remains embedded for its entire length at all times after installation.

10-2.5.2 **Driving**. Piles may be driven either in the dry or underwater. Steel piles placed underwater are usually driven to a predetermined top elevation. Wood piles driven underwater may be cut to a predetermined top elevation by an underwater saw operated by a barge mounted motor and guide frame.

10-2.5.3 **Length**. Because piles will vary in length at any given location, the lengths ordered must be sufficient to allow for possible variations. Piles may or may not penetrate into a structural foundation slab, depending on design anchorage requirements.

10-2.5.4 **Locations**. The accurate positioning of each pile is important to maintain the validity of design assumptions and make possible the installation of prefabricated items.

10-2.5.5 **Precautions in Driving and Handling**. Be sure that piles are undamaged by handling prior to driving, and substitute sound piles for those damaged in driving. Creosoted timber piles and precast concrete piles are particularly susceptible to handling and driving damage.

10-2.6 **Foundation Course**. To stabilize soft bottom material, place a foundation course consisting of a layer of gravel or crushed rock several feet thick. For drydocks

with relieved floors, grade the foundation course material to function as a filter. Where drainage pipes are used in conjunction with the filter course, the material around the pipes must be carefully placed and carefully compacted, to preclude damage to the pipes.

10-2.7 **Foundation Slabs**. Foundation slabs may be poured either by the tremie method or in the dry.

10-2.7.1 **Tremie Method**. For the tremie method, divide the floor slab into reasonable size pours by forms placed underwater, refer *to American Civil Engineering Practice, Volume II*, for illustrations of methods of tremie concrete. Pour as follows:

- Each pour must be placed through multiple pipes to minimize the distance of concrete flow after emerging from the tremie pipe end. Pipes should be no more than 3.66 m (12 ft) apart.

- Water must be excluded from tremie pipes before they are filled with concrete. Water may be kept out by special foot valves, or expelled by various go-devil devices that separate water from the concrete columns in the pipes as the columns build up with introduced concrete.

- Tremie concrete must be brought to within 1.46 or 0.61 m (1-1/2 or 2 ft) (nominally) of the top of the finished slab. Pour the remainder of the finished slab in the dry. This procedure allows cleaning the top of the tremie concrete after dewatering, embedment of various floor fixtures, and a final accurate floor finish and elevation.

10-2.7.2 **In the Dry Method**. When docks are constructed in the dry, the floor is poured to full thickness in one operation, and contains the embedded items.

10-2.7.3 **Field Verification of Weight**. For full hydrostatic docks, verify the actual weight of concrete and reinforcing steel being placed during construction, in order to ascertain the possible necessity for additional weight for conformity with design computations.

10-2.8 **Sidewalls and Abutments**. Construct all abutments and sidewalls in the dry. For drydocks constructed entirely in the dry, this is no special problem. For walls constructed on tremie placed slabs, the walls must be built within unwatered cofferdams placed on top of the tremie slabs. See Figure 5-3 for examples of cofferdams on tremie slabs.

10-2.9 **Miscellaneous Items**. Other structures built in connection with a graving dock (such as capstan, bollard, and crane rail foundations) present no unusual problems and may be constructed in accordance with accepted practice. Care must be taken to ensure accurate positioning of items to be embedded in concrete, and watertightness of such structures as capstan pits, pumpwells, and service galleries. All holes left by removal of items (such as from ties) should be patched, because such unevenness in concrete surfaces accelerates deterioration and may cause leakage.

10-2.10 **Backfill**. Backfill may be placed in the water or in the dry next to sidewalls and abutments. For tremie docks, it may be expeditious to place backfill in the wet. In the dry, backfill should be placed in shallow layers and each layer thoroughly compacted. Backfills comprise foundations for roadways, laydown area, and other structures built directly on them, and must have sufficient strength to support such loads.

10-3 ENTRANCE CLOSURES

10-3.1 **Construction and Use**. Entrance closures (caissons) are usually built of welded steel construction, but may also be built of reinforced concrete. Construction may be by a naval shipyard, but is usually done by a private contractor. Being adaptable for towing, a caisson may be built some distance away, in a yard particularly suited to economical prefabrication, and subsequently towed to the graving dock site.

10-3.2 **Dimensions**. It is important to accurately check drydock seat dimensions against those of the proposed closure, particularly for clearances. This is essential in the case of new caissons for existing docks.

10-3.3 **Ballast**. Permanent ballast necessary for proper operation and stability of a caisson is usually provided prior to an inclining test, and additional ballast, if necessary, is added at testing time.

10-3.4 **Launching**. Caissons may be constructed in a graving or floating drydock or on shipbuilding ways. Some small caissons can be built on piers and placed, by crane, in the water.

10-3.5 **Steel Caissons**. Methods and operations used in prefabrication, assembly, and launching of steel caissons are very similar to those of other welded steel floating vessels.

10-3.6 **Concrete Caissons**. Several prototype concrete caissons were built during World War II, using practices developed for construction of concrete vessels and ships. These practices differ from standard concrete construction methods in the unusual care needed to achieve a watertight, durable, and structurally sound caisson. The service record of concrete caissons should be evaluated prior to proceeding with new designs.

10-3.7 **Closure Tests**. Four types of tests are required as described in sections 10-3.7.1 through 10-3.7.4.

10-3.7.1 **Watertightness Test**. Watertightness must be made prior to launching, either by filling a caisson with water or by use of high-pressure air.

10-3.7.2 **Seating Test**. After launching, caissons must be seated and then raised several times, to check their operation.

10-3.7.3 **Deflection Test**. Deflections at various points of a caisson under full load (high tide with a graving dock empty) must be determined in comparison with no-load positions, and then checked against original design data. For a convenient reference line, use a wire stretched along the caisson centerline and fastened at the caisson ends.

10-3.7.4 **Inclination Test**. Inclination tests are used to determine the stability of a caisson under light conditions. The tests are on a caisson equipped and ready for operation, by moving known weights off center and recording the resulting caisson inclination angles. Angles are indicated by plumb bob pendulums, and obtained at light drafts only. Occasionally, a change in the amount of permanent ballast may be necessary because of such tests.

10-4 SUPPORTING FACILITIES AND ACCESSORIES

10-4.1 **Crane Rails**. Provide complete crane foundations, anchor bolts, and rails for portal cranes. Rails must be factory bent to required curvatures. Thermit weld or weld rail joints in accordance with alternate methods subject to NAVFAC approval. Refer to typical installation details in MIL-HDBK-1025/1 *Piers and Wharves*.

10.4.2 **Cranes**. Drydock cranes are usually obtained by separate contracts with firms specializing in this type of equipment. Because of size, cranes are assembled at sites by manufacturers, from prefabricated sections. Performance tests are required after assembly.

10-4.3 **Railroad Tracks**. Installation of ballasted dockside railroad tracks should follow standard railroad construction practice. Other railroad tracks are supported by a dock wall or special foundations, such as piles.

10-4.4 **Bollards and Bitts**. An important construction problem in the installation of accessory anchorages is that of correct positioning of anchor bolts during concrete placements. Since changing positions of embedded bolts after the concrete has set causes difficulties and expense, and is undesirable structurally, every possible precaution should be taken against disturbing such bolts during pours. Accessories subject to corrosion shall have basic corrosion resistant shop coats of paint after manufacture, with finish coats on installation prior to acceptance.

10-4.4.1 **Bollards and Cleats**. Space bollards and cleats to suit classes of vessels using the docks. Bollard foundations consist of large blocks of solid concrete, which generally rest on piles or are anchored directly to dock structures or crane track foundations. Embed anchor bolts in the concrete. Set bollard castings by crane on layers of mortar placed on the concrete foundations.

10-4.5 **Ladders**. Use ladders of light construction, and securely anchor ladders to masonry walls.

10-4.6 **Manhole Steps**. Manhole steps may be built into either concrete or brick masonry. If the spacing and stagger pattern of steps is constant, it is usually economical to fabricate special stepholding forms as reusable standard wall panels.

10-4.7 **Dock Water Level Indicators**. Do not install ceramic tile water level indicators at the same time a concrete wall is poured, but form the concrete to allow for subsequent tile installation. Set individual tiles flush with the wall in a bed of mortar. The gage zero usually coincides with the elevation of the dock floor level.

10-4.8 **Marking Plates**. Where marking plates already have centerlines, it is practically impossible to set them accurately at the time concrete is placed. Therefore, either form the concrete for subsequent plate installation or set plates in the pour and stamp on the centerlines afterwards.

10-4.9 **Fenders and Chafing Strips**. Fenders, chafing strips, and other fittings used for protective purposes (such as timber or metal guards around stairways, floodlights, and similar items) are customarily furnished and installed by contractors. Individual guard units should be preassembled, as completely as possible, and then fastened by anchor bolts embedded in concrete. Because of exposed positions and repeated submergency, treat all timber and coat all metal with corrosion resistant material.

10-5 MECHANICAL AND ELECTRICAL EQUIPMENT

10-5.1 **Installation**. Mechanical and electrical equipment for graving docks is manufactured, and to a large extent assembled, at manufacturers' plants. Installation of such equipment may be done under the direction of manufacturer superintendents, general contractor, subcontractor, or yard forces. Installation of mechanical and electrical equipment is generally in accordance with standard building practices. Only those installation features peculiar to graving docks are considered below.

10-5.2 **Capstans**. Placement of heavy capstan machinery usually should be done with truck or locomotive cranes. To maintain an even bearing, place a layer of grout between machinery foundations and concrete bases containing the anchor bolts.

10-5.3 **Pumping Machinery**. Pumping machinery is usually installed by the manufacturer. Because of the complexity of running performance tests on main pumps, detailed tests are made at the factory. Usually, only one main pump is tested in sufficient detail to obtain all necessary data for plotting suitable performance curves.

10-5.3.1 **Shaft Alignment**. It is extremely important to install pumps, pump motors, connecting shafts, and shaft support bearings so the shafts are correctly aligned with no unbalanced stresses imposed on the bearings.

10-5.3.2 **Running Test**. After installation, perform a thorough running test on the entire pumping plant. Fire pumps should be tested in accordance with NFPA Standard No. 20, *Standard for the Installation of Stationary Fire Pumps for fire Protection*.

10-5.4 **Piping and Flow Control Equipment**. Piping and flow control equipment may be purchased, installed, and tested by a separate contractor under the general contractor.

10-5.4.1 **Installation Practice**. Large diameter piping is supported above the floor by small concrete piers. Small diameter piping is generally hung from ceilings or walls by a variety of suitable pipe hangers or brackets. An alternate method of installing small diameter piping is to run the pipes along racks that are attached to masonry walls by expansion bolts or structural steel. In areas subject to earthquakes, the brackets and connections must be capable of resisting seismic forces.

10-5.4.2 **Installation Timing**. Because of the character of mechanical or piping installation, and general lack of sufficient working space to improve efficiency, the mechanical work should be done after the structural work has been nearly completed. This phase is particularly applicable when separate contracts are let for structural and mechanical work.

APPENDIX A

BIBLIOGRAPHY

Knight, Austin M., *Modern Seamanship*, Chapter 3, 1947, D. Van Nostrand Company, Inc., New York, N.Y.

Rossell, H. F., and Chapman, L. B., *Principles of Naval Architecture, Volume I*, Society of Naval Architects and Marine Engineers, New York, N.Y. 10006.

Trexel, Captain C. A., CEC USN, and Amirikian, A*., "Welded Caissons for Naval Dry Docks",* Journal of the American Welding Society, Volume XXII, pages 157-164, March 1943, American Welding Society, New York, N.Y. 10017.

Zola, Captain S. P., CEC USN, and Boothe, Captain P. M., CEC USN*, "Design and Construction of Navy's Largest Drydocks",* ASCE Proceedings, Waterways and Harbors Division, March 1960, American Society of Civil Engineers, New York, N.Y. 10017.

APPENDIX B

GLOSSARY

Bilge - The curve of a ship's hull joining the side and the bottom.

Captive Crane - A traveling crane limited to use at one facility because of the absence of track connections to other facilities.

Cavitation - The formation of cavities in a fluid flow due to low pressures attending high velocities in the fluid.

Chafing Strip - Strips of wood or other material placed on sides of waterfront structures, fittings, or vessels to protect against chafing from contact with other structures, ropes, or chains.

Cribbing - A framework, usually of timber, designed to distribute concentrated ship loads and to provide longitudinal stability to the keel blocks.

Elastic Mat - Structural slab on ground (usually of concrete) supporting separated vertical loads. The elastic deflections of the mat are correlated with resulting nonuniform soil reaction in computing stresses in the mat and the earth pressures.

Fair-Lead - A fitting through which a line may be lead so as to preserve or change its direction without inducing excessive friction.

Go-Devil - A tight mooring plug in a pipe, utilized to clear pipe of liquid or debris.

Gypsy Head - A small auxiliary drum at the side or top of a winch.

Keel - The principal bottom structural element of a ship extending along the centerline for the full length of the ship.

Mortar Intrusion Concrete - Concrete made by injecting cement or sand-cement mortar into the interstices of previously placed aggregate (it can be placed in the dry or underwater).

Skeg - Vertical projection extending below the hull of a vessel to reduce yawing.
Sonar Dome - A bulge or appendage on the keel of a ship, usually forward, for housing sonar equipment.

Stoplog - A dam consisting of a piece or pieces in slots in the sides of a waterway to shut off flow (usually for temporary use).

Trashrack - A grille, usually of vertical metal bars, used to screen out debris from the entrance to a waterway.

Tremie Concrete - Concrete placed underwater in such a manner that there is no free drop of the concrete through the water. This can be accomplished by pouring through a pipe or placing with special bottom-dump bucket. See Tremie Pipe.

Tremie Pipe - A vertical pipe through which concrete is placed underwater. In operation, water must be expelled from the pipe (so as not to mix with the concrete) by a go-devil (see above) placed ahead of the concrete, or the pipe must be freed of water before placing concrete and kept dry by means of a special flap valve at the bottom. During concrete placing, the bottom end of the pipe is kept buried in the concrete mass being placed so as to prevent backflow of water into the pipe.

Weep Hole - Opening provided in a wall or bulkhead to facilitate drainage of water. It usually serves to reduce hydrostatic pressure behind the structure.

Wheeler System - A system for introducing hot water into ship oil tanks and means for removing resulting froth and sludge.

Wildcat - A pocketed and slotted wheel on a winch over which a chain passes.

Winch (or Windlass) - An engine fitted with a rotating drum for hauling ropes. Some are fitted with multiple drums, a gypsy head for hauling ropes, or a wildcat for hauling chains.

APPENDIX C

REFERENCES

GOVERNMENT PUBLICATIONS

1. Naval Facilities Engineering Command
   1510 Gilbert Street
   Norfolk, VA 23511-2669

   www.efdlant.navfac.navy.mil

MIL-STD-1625C(SH), Safety Certification Program for Drydocking Facilities and Shipbuilding Ways for U. S. Navy Ships

MIL-HDBK-1003/8, Exterior Distribution of Utility Steam, HTW, CHW, Fuel Gas and Compressed Air

MIL-HDBK-1005/6, Trackage

MIL-HDBK-1005/7, Water Supply Systems

MIL-HDBK-1008C, Fire Protection for Facilities Engineering, Design, and Construction

MIL-HDBK-1005/9A, Industrial and Oily Waste Control

MIL-HDBK-1025/1, Piers and Wharves

MIL-HDBK-1025/2, Dockside Utilities for Ship Service

MIL-HDBK 1038, Weight Handling Equipment

UFC 3-240-02, Design - Wastewater Treatment System Augmenting Handbook

UFC 4-150-06, Military Harbors and Coastal Facilities

UFGS 03311, Marine Concrete

UFGS 09900N, Paints and Coatings

UFGS 16000 Series, Electrical Work

DM-7.01, Soil Mechanics

DM-7.02 Foundations and Earth Structures

NON-GOVERNMENT PUBLICATIONS

1. American Concrete Institute, P. O. Box 19150, Detroit, MI 48219-0150	ACI 318, Building Code Requirements for Reinforced Concrete
http://www.aci-int.org/	ACI 318 Appendix B, Alternative Design Methods
3. American Society of Civil Engineers, 345 East 47th Street, New York, N.Y. 10017	ASCE No. 3523, ASCE Journal of the Waterways and Harbors Division, Proceedings of ASCE, The Drydock Lock, WW2, May 1963
4. American Society for Testing and Materials, 1916 Race St., Philadelphia, PA 19103	ASTM A615, Deformed Billetsteel Bars for Concrete Reinforcement (DoD adopted)
5. National Fire Protection Association, Batterymarch Park, Quincy, MA. 02269	NFPA No. 20, Standard for the Installation of Stationary Fire Pumps for Fire Protection
	NFPA No. 70, National Electrical Code (DoD adopted)