Naval Facilities Engineering Command
1322 Patterson Avenue, SE, Suite 1000
Washington Navy Yard DC 20374-5065

APPROVED FOR PUBLIC RELEASE

NAVY RAILWAY OPERATING HANDBOOK

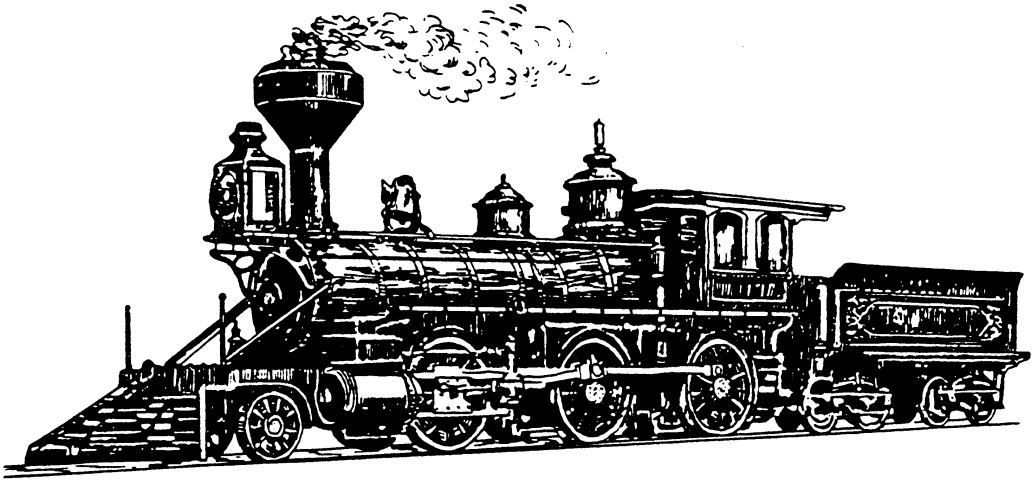

NAVFAC P - 301
February 2001

DISTRIBUTION LIST

CBC Gulfport (Code 440) (2)

CBC Port Hueneme (SLC) (2)

ENGFLDACT Chesapeake (Code 05) (2)

FISC Cheatham Annex (Code 01) (2)

LANTNAVFACENGCOM (Code 165) (4)

LANTORDCOM Det Charleston (Code 096) (4)

LANTORDCOM Det Earle (Code 09) (4)

LANTORDCOM Yorktown (Code 099) (4)

NAS Jacksonville (Code 180) (2)

NAS Oceana (Code 18) (2)

NAVAIRSYSCOM (AIR 08Y1) (2)

NAVFACENGCOM (PWT) (6)

NAVICP Mechanicsburg (Code 0814) (2)

NAVPHIBASE Little Creek (N-4) (2)

NAVSAFECEN Norfolk (2)

NAVSCOLCECOFF Port Hueneme (2)

NAVSEASYSCOM (SEA 0711) (4)

NAVSHIPYD Norfolk (Code 910) (2) (2)

NAVSHIPYD Portsmouth (Code 910) (2)

NAVSHIPYD Puget Sound (2)

NAVSUPSYSCOM (SUP 4251) (2)

NAVSURFWARCEN Port Hueneme Div Det Louisville (2)

NAVSURFWARCENDIV Crane (Code 096) (4)

NAVSURFWARCENDIV Dahlgren (W80) (2)

NAVSURFWARCENDIV Indian Head (Code 093T) (2)

NORTHNAVFACENGCOM (Code 00) (2)

PACNAVFACENGCOM (4)

PWC Norfolk (Code 700) (2)

PWC San Diego (Code 700 (2)

SOUTHNAVFACENGCOM (Code 00) (2)

SUBASE Bangor (2)

SUBASE Kings Bay (Code FT6) (2)

WESTNAVFACENGCOM (2)

WPNSTA Charleston (Code 096) (4)

WPNSTA Earle (Code 09) (4)

WPNSTA Seal Beach (2)

WPNSTA Yorktown (Code 099) (4)

WPNSUPPFAC Seal Beach Det Concord (4)

WPNSUPPFAC Seal Beach Det Fallbrook (4)

WPNSUPPFAC Seal Beach Det Port Hadlock (2)

Note: For your convenience, this revised Navy Railway handbook is located on the following website: http://www.efdlant.navfac.navy.mil/lantops_16/temc/index.htm.

Forward

The purpose of this handbook is to serve as a safety, operations, and maintenance guide for Naval activities operating or handling railroad equipment. The information presented in this publication has been derived from various industry standards utilized by the commercial railroads of the United States. Most of the practices contained in this handbook are mandatory. Others are recommended. The word “shall” is used for mandatory requirements, and the word “should” is used for recommended practices. In many instances, the word “should” in previous editions has been replaced with “shall.” You are encouraged to thoroughly review this handbook since it has been completely revised and updated. Pertinent information has been added and non-essential data has been deleted. A change synopsis is provided, highlighting the major changes that occur throughout the handbook.

The term Installation Commander is used throughout the manual and refers to the individual ultimately responsible for the safe operation of the railroad, for example, the Commanding Officer of the activity. Installation Commanders shall implement the requirements and recommendations contained in this handbook and incorporate them into their local railroad operating directives. In cases where the Installation Commander does not have ownership of some aspect of the railroad (for example, track), it may be necessary for the Installation Commander to have a Memorandum of Understanding with the organization responsible for that aspect of the program. This handbook shall be used in conjunction with other pertinent directives to provide for safe and reliable railroad operations. Requests for waivers shall be submitted through the chain of command to the Naval Facilities Engineering Command via the Transportation Equipment Management Center. Waiver requests shall include rationale, impact on safety if the waiver is granted, and impact on operations if the waiver is not granted.

This handbook is certified as an official publication of the command and, in accordance with SECNAVINST 5600.16, has been reviewed and approved.

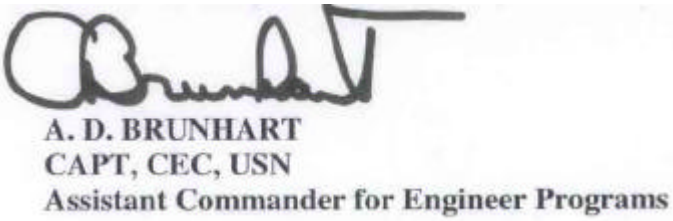

A. D. BRUNHART
CAPT, CEC, USN
Assistant Commander for Engineer Programs

Abstract

This revised handbook provides mandatory and recommended practices for the operation and maintenance of Navy Railway equipment.

Acknowledgments

Figures 3-2 and 3-3 reprinted from *The Basic Training Manual for Brakemen and Switchmen*, by permission of Simmons-Boardman Publishing Corporation. First published 1974.

Figures 2-6, A-2, A-3, and A-4 reprinted from *1970 Car and Locomotive Cyclopedia of American Practice* by permission of Simmons-Boardman Publishing Corporation. First published 1970.

Figure 2-10 reprinted from *1974 Car and Locomotive Cyclopedia of American Practice by* permission of Simmons-Boardman Publishing Corporation. First published 1974.

Figures 2-5 and 2-16 reprinted from *1980 Car and Locomotive Cyclopedia of American Practice* by permission of Simmons-Boardman Publishing Corporation. First published 1980.

Figures 2-4A, 2-4B, A-19, A-20, and A-22 reprinted from *1984 Car and Locomotive Cyclopedia of American Practice* by permission of Simmons-Boardman Publishing Corporation. First published 1984.

We are indebted to the Safety Office and Transportation Department at the Naval Surface Warfare Center, Crane and the Naval Ordnance Center at Indian Head, Maryland for the many hours they devoted to accomplish the revision of this manual.

CONTENTS

Page Number

REVISION LOG SHEET xiii

Change Synopsis…….……..……..xvii

Section 1. BACKGROUND.....1-1

1. Introduction.....1-1

a. Railroad Operations and the Navy Mission 1-1

b. Navy Rail Operations.....1-1

c. Pertinent Directives.....1-2

d. Commercial and Government Railroad Related Organizations.....1-3

e. Safety.....1-3

f. Drug and Alcohol Testing.....1-4

g. Railroad Mishap Reporting 1-4

2. Publication Update Documentation 1-4

3. Definitions Relevant to Navy Rail Operations 1-4

Section 2. EQUIPMENT DESCRIPTIONS. 2-1

1. Car Types. 2-1

a. Boxcars.....2-1

b. Tank Cars 2-1

c. Flatcars 2-2

d. Hopper Cars. 2-2

e. Gondola Cars.....2-2

f. Intermodal Container Cars.....2-2

2. Railcar Components.....2-2

a. Center Sill and Stub Sill.....2-2

b. End Sills and Body Side Sills 2-2

c. Cross Bearers and Cross Ties.....2-2

d. Body Bolsters and Body Side Bearings 2-2

CONTENTS (cont.)

Page Number

e. Coupler 2-2

f. Draft Gear and Draft Gear Pocket 2-4

g. Trucks.. 2-4

h. Center Sill Cover Plates 2-4

i. Floor Stringers 2-4

j. Diagonal Brace 2-4

k. Stack Pocket 2-4

l. Car Brake Systems 2-4

m. Hand Brake Systems 2-7

n. Air Brake Systems 2-7

3. Navy Locomotives. 2-12

a. Locomotive Types 2-12

b. Locomotive Propulsion and Braking Systems 2-13

4. Miscellaneous Equipment 2-18

a. Cranes. 2-18

b. Car Movers 2-18

c. Hy-Rails. 2-18

d. Other Rail Equipment. 2-18

5. Railroad Track 2-20

a. Track Components 2-20

b. Track Geometry 2-22

Section 3. OPERATIONS, PRACTICES, AND PROCEDURES 3-1

1. Basic Skills 3-1

a. General Guidelines 3-1

b. Locomotive Safety 3-2

CONTENTS (cont.)

Page Number

c. Pier Operations 3-2

d. Barricade Operations 3-2

e. Mounting, Dismounting, Riding and Climbing on Railway Cars and Locomotives 3-3

f. Switching Operations 3-7

2. Inspections During Operations 3-12

a. Locomotive Inspection and Setup 3-12

b. Railcar and Consist Inspection 3-16

c. Initial Terminal Air Test 3-17

d. Intermediate Train Air Test 3-18

e. Other Inspections 3-18

f. Track and Structures Inspections 3-18

3. General Operations 3-23

a. Train Operational Methods 3-23

b. Train Crew Notices 3-23

c. Notification of Emergency Vehicle Movement 3-24

d. Track Out-of-Service Procedures 3-24

e. Signals 3-24

f. Flagging Protection 3-30

g. Switching and Spotting Cars 3-30

h. Securing Equipment 3-32

i. Weighing of Cars 3-33

j. Cars 3-33

k. Handling Special Equipment 3-33

l. Handling of Suspect Cars 3-33

CONTENTS (cont.)

Page Number

m. Derailments and Other Incidents..... 3-33

n. Handling Cars with Defects..... 3-34

o. Deadman Controls..... 3-34

p. Guidelines for Handling Trespassers or Demonstrators... 3-34

q. Operation of Car Movers Hy-rails, Trackmobiles and other Track Equipment 3-34

4. Pre-Departure Brake Tests 3-35

a. Locomotive Brake Setup for Multiple Unit (MU) Operation 3-35

b. Locomotive Engine Brake Tests for One Unit or MUs 3-35

c. Train Line Air Brake Test, Initial Terminal 3-38

d. Train line Air Brake Test, Road or Intermediate Test 3-38

5. Train Handling 3-38

a. Starting a Train. 3-39

b. Service (Automatic or Train Line) Braking 3-39

c. Emergency Braking 3-41

d. Independent Braking 3-41

e. Speed Control 3-42

f. Use of Sand 3-42

g. Extreme Emergencies 3-42

6. Radio Procedures 3-43

a. General 3-43

b. Transmission of Train Orders by Radio 3-44

c. HERO Considerations 3-46

d. Emergency Transmissions 3-46

7. Dispatching..... 3-46

CONTENTS (cont.)

Page Number

8. Crew Size.....3-46

9. Hazardous Material (Haz Mat).....3-46

a. Prevention.....3-46

b. Derailment Issues.....3-46

c. Emergency Response.....3-47

d. Use of Placards… 3-47

Section 4. SKILL AREAS.....4-1

1. Job Descriptions.....4-1

a. Locomotive Engineer.....4-1

b. Conductor.....4-1

c. Braker/Switcher.....4-2

d. Dispatcher/Yardmaster.....4-3

e. Railroad Supervisor.....4-3

Section 5. LOCOMOTIVE AND RAILCAR MAINTENANCE.....5-1

1. General.....5-1

2. Daily Locomotive Maintenance- Maintenance Department.....5-1

3. Quarterly Locomotive Maintenance - Maintenance Department.....5-1

a. Air Hoses.....5-1

b. Battery.....5-1

c. Drive Belts 5-1

d. Engines.....5-1

e. Electrical Relays, Contacts and Contactors.....5-1

f. Charging Generator 5-2

g. Pedestal and Journal Box Wear Plates.....5-2

h. Electrical Brushes 5-2

CONTENTS (cont.)

Page Number

i. Air Gauges 5-2

j. Safety Appliances (ladders, handholds, steps, etc.) 5-2

k. Air brake System 5-2

l. Brake Shoes 5-2

m. Brake Linkage 5-2

n. Lights 5-2

o. Horn and Bell 5-2

p. Windshield Wipers 5-2

q. Sanders 5-2

r. Spark Arrestors 5-2

s. Event Recorders 5-2

4. Annual Locomotive Maintenance - Maintenance Department 5-3

a. Wheels 5-3

b. Center Plates and Bearings 5-3

c. Side Bearings 5-3

d. Engine Cooling Tank 5-3

e. Fuel Oil Tank 5-3

f. Air brake Filters 5-3

g. Axle Bearings - Plain Journal 5-3

h. Axle Bearings - Roller 5-3

i. Trucks 5-3

j. Gears 5-3

k. Air brake System Control Valves 5-3

l. Air Compressor 5-3

m. Couplers 5-3

CONTENTS (cont.)

Page Number

n. Traction Motor Nose Suspension.....5-4

o. Traction Motor Support Bearing Lubricators 5-4

p. Traction Motors and Traction Generators.....5-4

5. Bi-ennnial Locomotive Maintenance (every 2 years). 5-4

a. Air brake Systems 5-4

b. Main Reservoir Air Tank 5-4

6. Locomotive Maintenance - General Requirements.....5-4

7. Railcar Inspection and Maintenance - Maintenance Department 5-6

a. Annual Inspections.....5-7

b. Tri-ennial Inspections.....5-7

c. 72 Month Inspections.....5-7

d. Railcar Unscheduled Inspections 5-8

e. Exercise of Journal Bearings.....5-8

f. Decontamination.....5-9

Section 6. GUIDELINES FOR LOCAL DETERMINATIONS 6-1

1. Speed Limit Factors 6-1

a. Speed Considerations 6-1

b. Additional Considerations Affecting Speed 6-1

2. Crossing Factors.....6-1

a. Crossing Considerations.....6-1

b. Additional Considerations 6-2

3. Time on Duty 6-5

4. Railcar Intermix 6-5

CONTENTS (cont.)

Page Number

5. Commercial Access to Station 6-5

a. Background 6-5

b. Recommendations 6-5

Section 7. GUIDELINES FOR LICENSING 7-1

1. Crew Licensing 7-1

2. Qualification and Certification Requirements for Train Crews to Handle Ammunition and Explosives (A&E) 7-1

a. Background 7-1

b. License Requirements for Personnel Handling A&E 7-1

Section 8. RAILWAY SAFETY REQUIREMENTS 8-1

1. Safety Background 8-1

2. Safety Requirements 8-1

a. Safety Inspections 8-1

b. Safety Documentation 8-1

c. Safety Analyses 8-1

d. Safety Consultation 8-2

e. Safety Oversight 8-2

f. Local Railroad Operating Directive 8-2

3. Railroad Operations Governing Document Requirements 8-2

a. Contents of Local Railroad Operating Directive 8-2

b. Specific Situations 8-2

c. Association of American Railroads 8-3

d. Training 8-4

e. Annual Reviews of Local Railroad Operating Directive 8-4

CONTENTS (cont.)

Page Number

4. Hazard Notification System 8-4
   a. General 8-4
   b. Requirements 8-4
5. Refresher Training 8-4
   a. General 8-4
   b. Requirements 8-5
6. Standup Safety Briefings 8-5
   a. General 8-5
   b. Requirements 8-5

.

LIST OF ILLUSTRATIONS

Figure 2-1. Railcar types 2-1
Figure 2-2. Basic railcar components 2-2
Figure 2-3. Truck components 2-3
Figure 2-4A. Coupler components 2-4
Figure 2-4B. Coupler components, continued 2-5
Figure 2-5. Coupler types 2-6
Figure 2-6. Example of a draft gear system 2-7
Figure 2-7. Railcar brake system's air components 2-9
Figure 2-8. Railcar brake system's mechanical components 2-10
Figure 2-9. KC brake valve and reservoir 2-10
Figure 2-10. AB type service brake valves 2-11
Figure 2-11. End-cab locomotive 2-14
Figure 2-12. Center-cab locomotive 2-14

CONTENTS (cont.)

Page Number

Figure 2-13. Location of apparatus, 65-ton diesel electric locomotive.....2-15

Figure 2-14. 26L air brake control equipment..... 2-17

Figure 2-15. AAR-105 control stand..... 2-17

Figure 2-16. 26-L brake system related devices.....2-18

Figure 2-17. Example of a car mover.....2-19

Figure 2-18. Example of a hy-rail vehicle.....2-19

Figure 2-19. Basic track components..... 2-20

Figure 2-20. Basic switch components/switch stand assembly.....2-21

Figure 2-21. Track frog and guidelines..... 2-22

Figure 2-22. Gauge measurements.....2-23

Figure 2-23. Cross-level measurement.....2-23

Figure 3-1. Lifting methods..... 3-3

Figure 3-2. Mounting moving equipment..... 3-5

Figure 3-3. Dismounting moving equipment..... 3-6

Figure 3-4. Unsafe areas between coupler head and draft gear.....3-7

Figure 3-5. Examples of defective air hose.....3-13

Figure 3-6. Examples of defective wheels..... 3-14

Figure 3-7. Examples of defective wheels..... 3-15

Figure 3-8. Hazardous safety appliances.....3-19

Figure 3-9. Examples of defective ties.....3-20

Figure 3-10. Examples of broken or damaged rails..... 3-21

Figure 3-11. Freight car harmonic rock and roll..... 3-22

Figure 3-12. Hand and flag signals..... 3-25

Figure 3-13. Engine whistle signals..... 3-28

CONTENTS (cont.)

Page Number

Figure 3-14A. Whistle board shape and dimensions..... 3-29

Figure 3-14B. Whistle board specifications..... 3-30

Figure 3-15. Track derails..... 3-33

Figure 3-16. Illustration of draft and buff forces.....…3-42

Figure 3-17. Examples of hazardous materials warning placards.....3-50

Figure 6-1. Study positions for diagnostic team..... 6-2

Figure 6-2. Typical crossing signs..... 6-3

Figure 6-3. Typical placement of warning signs and pavement markings.....6-3

Figure 6-4. Typical placement of warning signs at crossings with parallel roads.....6-4

Figure A-1. Examples of brake beam hangers..... .....A-2

Figure A-2. Examples of a center hanger opening.....A-3

Figure A-3. Example of a journal bearing wedge A-6

Figure A-4. Illustration and cross section of a bearing adapter.....A-8

Figure A-5. Gauging defective wheels.....A-10

Figure A-6. Method of gauging flange height.....A-11

Figure A-7. Method of gauging vertical flanges A-11

Figure A-8. Method of gauging worn flange wheel.....A-12

Figure A-9. Method of gauging depth of witness groove in flange A-13

Figure A-10. Method of gauging location of witness groove in flange A-13

Figure A-11. Example of a wheel defect, worn coupler limit, worn journal coupler and journal fillet gauge A-14

Figure A-12. Method of gauging thin flanges.....A-15

Figure A-13. Method of gauging vertical flanges A-15

Figure A-14. Method of gauging flag spots A-16

CONTENTS (cont.)

Page Number

Figure A-15. Method of gauging end collar thickness A-16

Figure A-16. Plain axle journal A-17

Figure A-17. Plain axle A-18

Figure A-18. Roller bearing age A-19

Figure A-19. Example of a snubbing device A-22

Figure A-20. Example of a spring pack type snubbing device A-22

Figure A-21. Illustration of wear limit indicators of friction castings or elements A-23

Figure A-22. Example of a bolster gib and side frame wear plate A-24

Figure A-23. Method of marking and mating cast steel truck side frames A-25

Figure A-24. Illustration of repair welding of truck side frames A-26

Figure A-25. Example of a Type E coupler gauge A-28

Figure A-26. Example of a Type F coupler gauge A-29

Figure A-27. Example of a coupler shank and head A-31

Figure A-28. Example of acceptable yoke cracks A-31

LIST OF TABLES

Table A-1. Plain axle journal wear limits A-17

Table A-2. Plain axle wear limits A-18

Table A-3. Roller bearing axle wear limits A-19

Table A-4. Truck side frame and bolster gib wear limits A-24

Table A-5. Truck spring condemning height limits A-27

Table A-6. Recommended coupler heights A-29

CONTENTS (cont.)

Page Number

LIST OF FORMS

Form 1. Locomotive Inspection Checklist..... B-2

Form 2. Train Crew Notice..... B-3

Form 3. Train Crew Notice Acknowledgment Sheet..... B-4

Form 4. Locomotive Exception Report..... B-5

Form 5. Daily Locomotive Maintenance Report..... B-6

Form 6. Railcar Deficiency Report..... B-8

Form 7. Diagnostic Team Crossing Evaluation Report..... B-9

Form 8. NWS Seal Beach Highway/Railroad Crossing Information (Sample)……..B-14

Form 9. Written Test for Brakeman Railroad Equipment Operator License……..B-15

Form 10. Written Test for Conductor Railroad Equipment Operator License……B-18

Form 11. Written Test for Engineer Railroad Equipment Operator License…… B-22

APPENDICES

APPENDIX

A Locomotive and Railcar Inspection and Maintenance Requirements……..A-1

B Railroad Management Forms……B-1

INDEX..... INDEX-1

REVISION LOG SHEET

CHANGE #	DATE	TITLE	EMPLOYEE SIGNATURE

CHANGE SYNOPSIS

This synopsis is provided for clarification of changes to the previous version of the P-301.

Paragraph 1.1c. Deletes reference to OPNAVINST 8023.2C, US Navy Explosive Safety Policies, Requirements and Procedures. Replaced with OPNAVINST 8020.14/MCO P8020.11, dtd 01 Oct 99.

Paragraph 1.3. Clarifies definition of consist.

Paragraph 2.1c. Changes “elements is necessary” to “elements is not necessary”.

Paragraph 2.2m. Changes “Hand brakes should be applied” to “Hand brakes shall be applied”

Paragraph 3.1a(5) (2nd bullet). Changes “When in the vicinity of any track, personnel should maintain constant vigilance” to “When in the vicinity of any track, maintain constant vigilance”.

Paragraph 3.1a(5) (5th bullet). Deletes “When crossing over tracks, always leave at least 20 feet between yourself and the end of a cut of cars.”

Paragraph 3.1.c. Adds 3.1c(5). Spotting of explosive-laden cars on wharves and piers have unique requirements: stand-by locomotives, wheels unchocked, and hand brakes not set. See NAVSEA OP 5, Vol I para. 12-6.3.4j.

Paragraph 3.3e(3). Adds note at the end of the page: If necessary to mount or dismount a moving flatcar, use extreme caution, as these cars have no safety mechanisms for climbing on or off the cars.

Paragraph 3.1.f.(1). Changes “the railcar or locomotive and the railcar to be coupled should be a minimum of three (3) feet and a maximum of five (5) feet.” to “the railcar or locomotive and the railcar to be coupled shall be a minimum of three (3) feet and a maximum of five (5) feet.”

Paragraph 3.1.f(5) (3rd bullet). Changes “same wheel” to “same truck”.

Paragraph 3.2a. Editorial change. Changes “LOCOMOTIVE EXCEPT REPORT” to “LOCOMOTIVE EXCEPTION REPORT”.

Paragraph 3.2a . Adds requirement to retain the Locomotive Inspection Checklist and the Locomotive Exception Report for at least 30 days.

Paragraph 3.2b. Adds requirement to maintain the RAILCAR DEFICIENCY REPORT for at least 30 days.

Paragraph 3.2.b(7). Changes “the presence of a gasket should be confirmed” to “the presence of a gasket shall be confirmed”.

Paragraph 3.2.e. Makes it mandatory for the engineer to be signaled to stop if a defect is discovered while the train is moving.

Paragraph 3.3.a(1)(2nd bullet). Changes terminology from “by a local SOP” to “by the local railroad operating directive”.

Paragraph 3.3b. Revised for clarification and elimination of duplication noted in Section 8.4.

Paragraph 3.3.e(3). Changes requirement to place whistle boards from “should“ to “shall”.

Figure 3-13. Clarifies key for engine whistle signals.

Figure 3-14B. Comments under “Placement” revised for clarification.

Paragraph 3.3.g(2). Clarifies requirement for use of hand brakes and chocks in addition to an editorial change. “Local SOPs” changed “local railroad operating directive.”

Paragraph 3.3q. Editorial change.

Paragraph 3.4a. Revises procedures for Pre-departure brake test.

Page 3-37. Clarifies test procedures for locomotive type 26 series.

Paragraph 3.6.a and b. Editorial change.

Paragraph 3.8. Clarifies crew size for trains bearing ammunition or explosives.

Paragraph 3.9d. Placard definitions expanded.

Paragraph 5.2. Changes requirement to maintain Form 5 for at least 30 days vice 30 days.

Paragraph 5.6 (6th bullet). Revises sentence for clarification.

Paragraph 5.7.a(1). Revised for clarification.

Paragraph 6.1.b (3). Editorial change.

Paragraph 6.5b. Changes “Facility managers” to “Installation Commander”.

Paragraph 7.2. Revised for clarification.

Paragraph 8.2. Revised for clarification.

Paragraph 8.2b. Editorial change.

Paragraph 8.2c. Makes it mandatory for Installation Commanders to require safety analysis.

Paragraph 8.2d. Editorial change.

Paragraph 8.2e. Revised for clarification.

Paragraph 8.2f. Changes the word should to shall.

Paragraph 8.3.a. Changes the word should to shall.

Paragraph 8.3b. Revised for clarification.

Paragraph 8.4b. Editorial changes and revision for clarification.

Paragraph 8.6b. Editorial change.

INTENTIONALLY LEFT BLANK

Section 1.
BACKGROUND

1. Introduction.

a. Railroad Operations and the Navy Mission. The use of steel rails and wheels as a method of transporting commodities is almost as old as the U.S. Navy itself. Although the designs and materials that make up a railroad system have evolved and been refined over the years, the concept and advantages of rail transportation remain unchanged. It is often the most efficient way to move large volumes of materials and lends itself to transporting bulky or heavy objects.

The Navy's need to maintain internal material movement capability and to sustain increased levels over potentially long periods is often best filled by rail-based operations. In addition, many ongoing operations in production, loading, unloading, building and repair rely heavily on various rail-based systems for transportation needs.

It should be note that much of the Navy's equipment is over 40 years old. Navy rail rolling stock that does not currently meet FRA standards will be programmed and budgeted for upgrade as soon as practical, considering existing Navy funding and scheduling priorities.

b. Navy Rail Operations. The installations with internal railway operations include a wide range of physical plants and operating requirements. Naval activities that utilize rail can be divided into three basic categories.

(1) Ordnance related: Weapons Stations, Weapons Support Centers, and Ordnance Stations.

(2) Operation Support: Shipyards, Submarine Bases, and Air Stations.

(3) Others: Construction Battalion Centers, Supply Centers, and Public Works Centers.

The Naval Weapons Stations are the largest users of rail with over 70% of the Navy's railroad mileage. The movement of ordnance and related functions of a rail network on a Naval Weapons Station is similar to that of a short line commercial operation complete with mainlines and classification yards. However, there are also many unique aspects such as piers, bunkers, and barricades that put special demands on the conduct of a safe operation.

Naval Shipyards also represent a significant portion of Navy rail with approximately 10% of the Navy's railroad mileage. Shipyards are similar to commercial industry rail facilities, with track going in and around buildings, shared right-of-ways with roads, many depressed switches in the roads, and many close clearances and tight curves, both vertical and horizontal. However, there are also many unique features to shipyards, including the transport of a variety of hazardous commodities, ranging from radioactive water to various petroleum products, shared rails with cranes, and the need for coupler extensions on some extremely tight curves. The wide variety of

freight in low volumes and the high-density surroundings put additional demands on a train crew's adherence to safe operating procedures.

Various other activities comprise the remaining 20% of Navy railroad mileage. These rail systems are important in their special service roles. The layout and operating methods on these installations are often unique and sometimes employ equipment such as car movers and hi-rail equipment that require application of additional operating procedures and rules not relevant to other Navy rail systems.

c. Pertinent Directives.

(1) NAVFAC P-300, Management of Civil Engineering Support Equipment.

Covers management of transportation equipment.

(2) NAVFAC P-307, Management of Weight Handling Equipment.

Covers management of Weight Handling Equipment.

(3) Navy MO-103, Maintenance of Trackage.

A manual for the maintenance of railroad trackage at Naval activities.

(4) NAVFACINST11230.l Series, Inspection, Certification, and Audit of Crane and Railroad Trackage.

Presents uniform track inspection procedures and maintenance guidelines.

(5) NAVSEA 0P 5, Vol. 1, Ammunition and Explosives Ashore Safety Regulations for Handling, Storing, Production, Renovation, and Shipping.

Covers issues that may be of concern to some rail operations related to the movement of ammunition and explosives.

(6) NAVSEA SW023-AG-WHM-010, Technical Manual-On-Station Movement of Ammunition and Explosives by Truck and Railcar.

Covers issues that may be of concern to rail operations related to the movement of ammunition and explosives.

(7) OPNAVINST 8020.14/MCO P8020.11 dtd 01 Oct 99, Explosive Safety Policies, Requirements and Procedures.

Covers the principal naval explosives safety policies and procedures approved by the Office of the Chief of Naval Operations (OPNAV) and guidance on contractors' safety requirements.

(8) NAVSEA 8023.11, Standard Operating Procedure for Processing Expendable Ordnance at Naval Activities.

Covers policy, guidance, and direction for developing and using Standard Operating Procedures (SOPs) for the processing of expendable (non-nuclear) ordnance at Navy and Marine Corp activities in accordance with NAVSEA OP 5, Vol I and OPNAVINST 8023.2C.

d. Commercial and Government Railroad Related Organizations.

(1) The Association of American Railroads (AAR) maintains and publishes such industry guidelines as the Field Manual of Interchange Rules, which, by industry agreement establishes standards for interchange inspection and repair of railcars. The AAR also develops and maintains specifications for freight car and component design. Navy installations shall be concerned with AAR standards for cars accepted from interchange and those to be delivered to interchange. Cars captive to a naval installation do not come under AAR recommended practices or interchange rules, but the practices and rules do provide useful guidance.

(a) The Standard Code of Operating Rules (AAR Code Manual) This manual provides useful guidelines for preparation of activity railroad operating manuals. If rules or information contained in this manual are used, quote the rule vice the number/letter designation of the rule.

(b) AAR Standards and Recommended Practices and Interchange Rules. This publication provides railcar standards, some standards for locomotives, and interchange rules.

(2) The Federal Railroad Administration (FRA) is a regulatory agency under the Department of Transportation. It is concerned with developing, modifying and enforcing safety regulations for the commercial railroads of the United States. The regulations formulated by the FRA for rail equipment safety appear in Title 49 of the Code of Federal Regulations. Even though DoD intra-installation rail equipment and facilities are exempt from compliance with FRA railway standards, it is DoD policy to comply with these FRA standards for both rail rolling stock and trackage. The most frequently used sections of Title 49 follow:

Part 215 - Railroad Freight Car Safety Standards

Part 219 – Control of Alcohol and Drug Abuse

Part 229 - Railroad Locomotive Safety Standards

Part 231 - Railroad Safety Appliance Standards

Part 232 - Railroad Power Brakes and Drawbars

e. Safety.

(1) Safety must be a top priority of all personnel. Disregarding safe practices needlessly puts workers, the general public, government and private property at risk and increases the potential for impairing operational readiness. Safety rules and SOPs are for the protection of personnel, as well as for safeguarding Government property. All personnel engaged in rail operation must be conversant with and obey the safety rules and special instructions governing their particular rail operation.

(2) Navy railroad operations involve the movement of hazardous materials and equipment, often in potentially conflicting paths. An accident can lead to the death or serious injury of crew members and other personnel. Constant vigilance is required by all involved in rail operations to avoid errors in judgment caused by either familiarity with or inattention to everyday repetitive tasks.

(3) Rules are developed and instituted to address specific operational issues. The ultimate responsibility for a safe operation rests with the Installation Commander. However, those who supervise, dispatch, and operate the trains are directly responsible for railroad safety. Rules cannot be written for every conceivable rail operation. Rules are a framework around which a safe operation can be built with common sense and the desire to work in a safe manner.

f. Drug and Alcohol Testing. Navy personnel involved in operation of a train are subject to drug and alcohol testing due to public safety consideration. As a minimum, the conductor, engineer, and braker/switcher must be tested. Installation Commanders shall ensure that all railroad personnel, including the three crew members listed above and the dispatcher and railroad supervisor, comply with the drug and alcohol testing program in accordance with the requirements and procedures found in the Department of Navy Office of Personnel Management, OCPM Instruction 12792.3 series.

NOTE:
Inclusion of the dispatcher and railroad supervisor are more stringent requirements than contained in OCPM Instruction 12792.3 series.

g. Railroad Mishap Reporting. Railroad mishaps include incidents such as derailments; collisions with other trains, stopped or moving vehicles, equipment on track, or structures; hot boxes; fires; personal injuries or property damage; shifted loads due to improper blocking and bracing; and hard couplings that require inspection of the load or railcar. Railroad mishaps shall be reported in accordance with the OPNAV Instruction 5102.1 series, OPNAV Instruction 5100.23 series, NAVFAC P-300, NAVFAC Instruction 11230.1 series, and others as appropriate.

2. Publication Update Documentation.

All revisions to this publication shall be recorded on the revision log sheet and incorporated into the handbook.

3. Definitions Relevant to Navy Rail Operations.

'A' END OF CAR. The end of a railcar opposite the "B" or brake end.

ABSOLUTE BLOCK. A section of track which no train is permitted to enter while it is occupied by another train, except as prescribed by the governing directives.

ADAPTER, ROLLER BEAMNGS. A casting that fits between an axle roller bearing and the truck side frame to transfer the load from the side frame to the bearing.

ADHESION. A measure of the ability of locomotive driving wheels to accept rotational force without slipping on rails, usually expressed as a percent of the total weight on the drivers.

AIR BRAKE. The braking system used on all railcars.

AIR BRAKE HOSE. The flexible hose at each end of a railcar which is threaded into the brake pipe angle cock at one end, and has a glad hand fitting at the other end which engages with a similar coupling on an adjoining car.

AMPERE. The fundamental unit of measure for electric current. One Ampere is defined as the current that flows when a potential of one volt is impressed on a resistance of one Ohm.

ANGLE BAR. One of two steel bars used to join rail ends together to form continuous track, (sometimes called "joint bar").

ANGLE COCK. A special type of 1-1/4" valve of either ball or plug design, located at both ends of the brake pipe on locomotives and railcars and used to control admission of air to the brake pipe on individual cars. The free end is angled at 45 degrees and is threaded to receive the threaded end of the air hose.

'B' END OF CAR. The end on which the hand brake is located. Commonly used with "L" or "R" to designate either the left or right side when facing the "B" end, i.e., "BL" or "BR," "AL" or "AR".

BALLAST. Angular crushed stone used for placement on the roadbed for the purpose of holding the track in line to ensure it is properly surfaced. Distributes and transfers railcar loads from the tie to the subgrade and provides for drainage.

BARRICADED SIDING. A siding within concrete or earth walls to contain hazardous material loaded cars.

BEARING, JOURNAL. The general term used to describe the load bearing arrangement at the ends of each axle of a railcar truck. Plain journal bearings are also known as "friction bearings", blocks of metal, usually brass or bronze, shaped to fit the curved surface of the axle journal, and resting directly upon the bearing, with lubrication provided by free oil contained in the journal box. Journal roller bearings are sealed assemblies of rollers, races, cups and cones pressed onto axle journals and generally lubricated with grease. Vertical loads are transferred from the journal bearing to the truck side frame through the journal bearing wedge (plain bearing design) or through the roller bearing adaptor in roller bearing trucks.

BLEED. Remove air from a railcar brake system. ABD railcar brake valves allow the brake cylinder to be bled while saving the air in the reservoirs on the car or, if desired, the entire car air system can be bled. AB railcar brake valves bleed the entire system.

BLOCK. A length of track of defined limits, the use of which is controlled by block occupancy directives.

BLUE FLAG. A blue signal (blue flag by day, a blue light by night), displayed at one or both ends of the locomotive, car, train, or track indicating that workmen are in, on, under, between or around the equipment. Equipment with blue flag protection shall not be moved or coupled into.

BODY BOLSTER. The transverse members of the railcar underframe which is located over the trucks and transmits the load carried by longitudinal sills to the trucks through the center plates.

BRAKE BEAM. The supporting structure for the two brake heads and two brake shoes acting upon any given pair of wheels.

BRAKE CYLINDER. A steel cylinder attached to the body frame or truck frame of a railcar or locomotive. It applies the brakes when supplied with air pressure. When the air pressure is released, the piston is returned to its normal position by a release spring coiled about the piston rod inside the cylinder.

BRAKE PIPE. That section of the air brake piping of a car or locomotive which acts as a supply pipe for the reservoirs and is the means by which the car brakes are controlled by the engineman. When a train is made up and all brake pipes on the cars are joined, the entire pipeline comprises what is commonly called the "train line."

BRAKE ROD. Any of the rods which form the connections between brake levers and through which the braking force is transmitted.

BRAKE SHOE. A block of friction material formed to fit the curved surface of the tread of a wheel, and riveted or otherwise bonded to a steel backing plate having provision for quick and positive securement to the brake head. Brakes on most conventional railroad cars depend on friction created by the brake shoe rubbing on the wheel tread during a brake application. Brake shoes can be made of cast iron or of a high friction composition material, but because of the differing friction characteristics, cast iron and composition shoes are not interchangeable.

BRAKE VALVE. The valve in the locomotive with which the engineer operates the brakes. The term is also used to refer to the control valve on a car.

BRIDGE TIE. A transverse timber member resting on the stringers of a bridge and supporting the rails.

BUFF FORCES. The force on a draw bar that compresses (pushes) on a draw bar. Buff forces tend to push the train together.

BUFFER CAR. A railcar placed between the locomotive or an occupied railcar and a railcar transporting hazardous material.

BULLPEN. A storage area for incoming and outgoing commercial railcars.

CAPACITY. The nominal load in pounds or gallons that a railcar permitted to carry. These figures are stenciled on the car and are identified as "CAPY." Capacity is not to be confused with load limit, which is the maximum weight that can be loaded in a given car.

CENTER PLATE. A cast or forged steel plate riveted or welded to the body bolster and the truck bolster at the railcar centerline, the function of which is to transfer the body bolster load to the trucks through the truck bolster.

CENTER SILL. The main longitudinal structure member of a railcar underframe, often constructed as a large box section or hat section. The center sill receives all of the buff and draft forces created in train handling and switching.

CLEARANCE (Dimensions). Railcar dimensions that cannot be exceeded.

COMPROMISE JOINT. Joint bars designed to connect rails of different height and cross section.

CONSIST. The make up of a freight train by types of locomotives, cars and their contents.

COT&S. An acronym that stands for "Clean, Oil, Test and Stencil" and refers to the periodic servicing of a railcar's brake system components.

COUPLER. The device used to connect any railcar to another railcar or a locomotive. A coupler includes a draw head, links, pins, and a knuckle.

COUPLER EXTENSION. A metal connector that attaches between railcar or locomotive couplers and permits additional swing for operation on close curves.

CRANE RAIL. Rail used to support cranes.

CROSSING, HIGHWAY. The point where a railroad track and a road cross at grade. Highway crossings are normally protected by signs, or signs and flashing lights, or signs, flashing lights, and gates.

CROSSING, RAIL. The point where two railroad tracks intersect at grade. Rail crossings are normally protected by a stop sign or a directive specifying the operating method to be followed.

CROSSOVER. Two turnouts with the track arranged to form a continuous passage between nearby and generally parallel tracks.

CURRENT OF TRAFFIC. The movement of trains on a main track, in one direction specified by the rules.

CUT OF CARS. A string of two or more cars coupled together.

DEFECT CARD. A card issued by a railroad acknowledging responsibility for physical damage done to a non-owned railroad car and granting authority to bill the issuing carrier for the cost of repairs in accordance with the Code of Interchange Rules published by the Association of American Railroads.

DERAIL. A safety device, attached to one rail of a siding or storage track, that will cause a railcar to be derailed in the event it rolls free in a direction that could cause a major accident. Used to protect main lines, sensitive loading areas, etc.

DOUBLE TRACK. Two parallel main tracks.

DRAFT FORCES. The force on a draw bar that tends to pull on a draw bar. Draft forces tend to pull the train apart.

DRAFT SYSTEM. The term used to describe the arrangement on a railcar for transmitting coupler forces to the center sill. On standard railcars, the draft system includes the coupler, yoke, draft gear, follower, draft key, draft lugs, and draft sill. On cushioned cars, either hydraulic end-of-car cushion units and their attachments replace the draft gear and yoke at each end; or a hydraulically controlled sliding center sill is installed as an integral part of the car underframe.

DRAWBAR. The coupler head and shank.

END OF TRAIN DEVICE (EOT). A device that contains a flashing end of train marker.

ENGINE. A mechanism for converting the energy in steam, air, or other gas under pressure into mechanical energy in the form of motion, i.e., steam engine, diesel engine, gasoline engine.

FEED VALVE. A valve, which automatically maintains a predetermined pressure of air, supplied through the brake valve to the automatic brake system.

FIXED SIGNAL. A signal of fixed location indicating a condition affecting the movement of a train or locomotive.

FLANGEWAY. The open way through a track structure which provides a passageway for wheel flanges.

FRICTION BEARING. (See BEARING.)

FROG. A track structure used at the intersection of two running rails to provide support for wheels and passageways for their flanges, thus permitting wheels on either rail to cross the other.

FULL SERVICE APPLICATION. Manipulation made by the engineer on the automatic brake valve handle so that auxiliary reservoir pressure and brake cylinder pressure is equalized. Full service application is the largest reduction of reservoir pressure that can be made without applying the emergency braking. Full service application is 26 lbs. for 90 lbs. of brake pipe pressure.

GLAD HAND. The metal fitting attached to the free end of each air hose. Glad hands are designed to provide for quick and positive connection of air hoses on adjacent cars.

GRADE (horizontal). Horizontal track curvature expressed either in degrees or radii (feet). The amount of central angle subtended by a chord of 100 feet.

GRADE (vertical). The percentage of change in track elevation to the level distance traversed. One percent grade is equal to a change in elevation of one foot for each 100 feet of track.

GRADE CROSSING. (See CROSSING, HIGHWAY).

GUARD RAIL. A rail or other structure laid parallel with the running rails of a track to prevent wheels from being derailed; or to hold wheels in correct alignment to prevent their flanges from striking the points of turnout or crossing frogs or the points of switches.

HAND BRAKE. A device mounted on railcars and locomotives. It provides a means for applying brakes manually, without air pressure. Common types include vertical wheel, horizontal wheel and lever type, so named because of the configuration or orientation of their operating handles.

HERO. An acronym that stands for Hazards of Electromagnetic Radiation to Ordnance.

HAZARD. Any condition that may cause an accident or contribute to the severity of an accident.

HAZARDOUS MATERIAL. Any material which poses a hazard**.** Examples of hazardous materials are explosives, poisons, flammable liquids, corrosive substances, and oxidizing or radioactive materials. When used with respect to lading in transportation vehicles, the term identifies the lading as subject to specific safety requirements.

HOT BOX. Overheated roller or journal bearings.

IDLER CAR. Usually a flatcar used in the transportation of a long article or shipment, which extends beyond the limits of the car carrying the shipment; the "idler" being a car on which the shipment or article does not rest, but overhangs.

INTERCHANGE. The transfer of commercial railcars from one railroad to another at a common junction point.

INTERCHANGE RULES. A set of regulations adopted by the Association of American Railroads governing the care and handling of freight cars operating in interchange service.

JOINT. A fastening designed to unite the abutting ends of contiguous rails.

JOINT BAR. One of two steel bars used to join rail ends together to form continuous track. Sometimes called "angle bar".

JOINT OPERATION. Trackage supporting operation of two or more railroads but controlled by one source.

JOURNAL BOX. The metal housing on a plain bearing truck which encloses the journal of a car axle, the journal bearing and wedge, and which holds the oil and lubricating device.

JOURNAL BRASS. Another term sometimes used when referring to a plain journal bearing.

KNUCKLE. The pivoting hook-like casting that fits into the head of a coupler and rotates about a vertical pin to either the open position (to engage a mating coupler) or to the closed position (when fully engaged).

KNUCKLE PIN. The steel pin holding the knuckle in the head of the coupler.

LAP. A braking position on certain locomotive automatic brake valves which retains the brake pipe pressure selected by the operator.

LEAD TRACK. An extended track connecting either end of a yard with the main track.

LOAD LIMIT. The maximum weight of lading that a railcar is designed to carry. For cars meeting standard AAR design criteria, the load limit is equal to the maximum allowable gross weight on the rails (determined by axle and wheel size), less the light weight of the car. Load limit is stenciled on every freight car in conjunction with the capacity and lightweight and is abbreviated LD.LMT.

LOCOMOTIVE. A self-propelled rail vehicle designed to convert electrical or mechanical energy into tractive effort to move railcars.

MAIN RESERVOIR. A cylindrical tank, carried on a locomotive, to hold a supply of compressed air. The main reservoir is distinct from the auxiliary and emergency reservoirs under each car.

MAIN TRACK. A track extending through yards and between stations, upon which trains are operated by centralized control.

MU. Multi-unit locomotive. More than one power unit connected together, and controlled by any one of the power units.

NEW. Net explosive weight.

NET. Net explosive tonnage.

PC SWITCH. A pneumatic control switch that automatically opens during an emergency brake application and reduces the power output of the locomotive. The PC switch automatically resets itself provided the throttle is returned to idle and control of the brake is recovered. It is often referred to as the power cutoff switch.

PLAIN BEARING. (See BEARING.)

RESERVOIR, AUXILIARY. A compressed air storage tank that is a part of the air brake equipment on each railcar. Compressed air is stored in the auxiliary reservoir and is admitted to the brake cylinder to apply train brakes when brake pipe pressure is reduced. The auxiliary reservoir is isolated from the emergency reservoir by a separator plate bolted between them.

RESERVOIR, EMERGENCY. A compressed air storage tank which is a part of the air brake equipment on each car. Air stored in the emergency reservoir is used to apply the brakes during an emergency application, and to assist in releasing the brakes and recharging the system during brake release operations.

RIGHT OF WAY. The strip of land on which a railroad track is built.

ROLLER BEARING. (See BEARING.)

ROLLING STOCK. Any equipment that rolls on wheels which includes cars, trucks, heavy equipment, material handling equipment, etc. but excludes skid-mounted equipment-- for example, generators.

RUNNING RAIL. The rail or surface on which the tread of the wheel bears.

RUNNING TRACK. A track reserved for movement through a yard.

SAFETY APPLLIANCE. Any one of several specific components which should be on railcars. Safety appliances are for train crewmembers and other persons whose duties require them to be on or around the equipment. Safety appliances on cars include hand brakes, handholds, ladders, uncoupling levers, sill steps, and safety railings.

SHOULDER (TRACK). The portion of the ballast between the end of the tie and the toe of the ballast slope.

SIDE BEARING. A load-bearing component, located either on the truck or bolster, and arranged to absorb vertical loads arising from the rocking motion of the railcar. There are various types of side bearings ranging from simple flat pads to complex devices which maintain constant contact between the truck bolster and car body.

SIDE SILL. The outside longitudinal members of the underframe which form the outer edges of the railcar body.

SIDING. A track auxiliary to the main track.

SINGLE TRACK. One main track on which trains operate in either direction, distinguished from double or multiple track.

SOUPING. A condition in which the engine blows oil out the exhaust. This condition is generally caused by glazed cylinder walls which prevent the piston rings from properly seating.

SPARK SHIELD. A plate located on the bottom of a railcar over the wheels designed to deflect sparks away from combustible car components.

SPEED, NORMAL. The maximum speed authorized.

SPEED, RESTRICTED. A speed reduction defined by directive.

SPRING SWITCH. A track switch with a spring mechanism that automatically returns the switch points to a normal position after they have been displaced by passage of railcars in a trailing point movement.

STUB TRACK. A form of side track connected to a running track at one end only and usually protected at the end by some form of bumping post or other solid obstruction.

SURFACE (TRACK). The condition of the track as to vertical events or smoothness.

SUSPECT CAR. A railcar of unknown contents.

TANGENT (TRACK). Any straight portion of a railway alignment. Tangent track means straight track with no curves.

TIE. In track construction, the cross members to which the rails are attached.

TIE PLATES. Steel plates interposed between the rail and a tie.

TOFC/COFC. Trailer On Flat Car/Container On Flat Car.

TRACK CAR. Any equipment operated on track, such as motor car, hand car, trailer, or other unit not on standard railcar trucks.

TRACK GAUGE. A device by which the gauge or width of a track is established or measured.

TRACK SWITCH. (See TURNOUT.)

TRACTION MOTOR. A specifically designed direct current, series-wound motor mounted on the trucks of locomotives to drive the axles.

TRACTIVE EFFORT. The usable force exerted by the wheels of a locomotive at the rails for pulling a train.

TRAILING MOVEMENT. The movement of a train over the points of a switch which face in the direction in which the train is moving.

TRAIN. Locomotive with or without cars operating as one unit.

TRAIN CREW NOTICES. A hardcopy reference for train crews that contain information critical to maintaining a safe operation. Notices are usually located where crews can easily read and review them before, during and after railroad operations.

TRAIN LINE. A term applied to describe the continuous line of brake pipe extending from the locomotive to the last car in a train, with all cars and air hoses coupled.

TRUCK. The complete assembly of parts including wheels, axles, bearings, side frames, bolster, brake rigging, springs and all associated connecting components, the function of which is to provide support, mobility, and guidance to a railcar.

TRUCK FRAME. A structure made of cast steel in one piece, to which the journal boxes or pedestals, springs and other parts are attached, and which forms the skeleton of a truck. One-piece truck frames are not generally used for freight cars but are often found on locomotives and passenger cars.

TRUCK SIDE BEARINGS. A plate, block, roller, or elastic unit fastened to the top surface of a truck bolster on both sides of the center plate, and functioning in conjunction with the body side bearing to support the load of a moving car when variations in track cross level cause the body to rock transversely on the center plates.

TRUCK SPRINGS. A general term used to describe any of the several types of springs used in the suspension systems of trucks to provide a degree of vertical cushioning of the car and its load.

TURNOUT. An arrangement of a switch and a frog with closure rails by means of which rolling stock may be diverted from one track to another. Another name for "TRACK SWITCH."

WHEEL FLANGE. The tapered projection extending completely around the inner rim of a wheel, the function of which, in conjunction with the flange of a mate wheel, is to keep the wheel set on the track by limiting lateral movement of the assembly against the inside surface of either rail.

WHEEL PLATE. The part of the wheel between the hub and the rim.

WHEEL RIM. The portion around the outer circumference of the wheel that forms the edge of the tread. The thickness of the rim is a measure of the amount of wear remaining in the wheel.

WHEEL TREAD. The slightly tapered exterior running surface of the wheel that comes in contact with the top surface of the rail, and serves as a brake drum on cars with conventional brake arrangements.

WYE TRACK. A triangular arrangement of tracks on which locomotives, cars, and trains may be turned.

YARD. A system of tracks within defined limits used for the makeup of trains, car storage and other purposes.

YARD LIMITS. Trackage where yard operating procedures apply.

INTENTIONALLY LEFT BLANK

Section 2.
Equipment Descriptions

1. Car types.

The following is general information pertaining to the various types of railcars found at naval installations. See Figure 2-1.

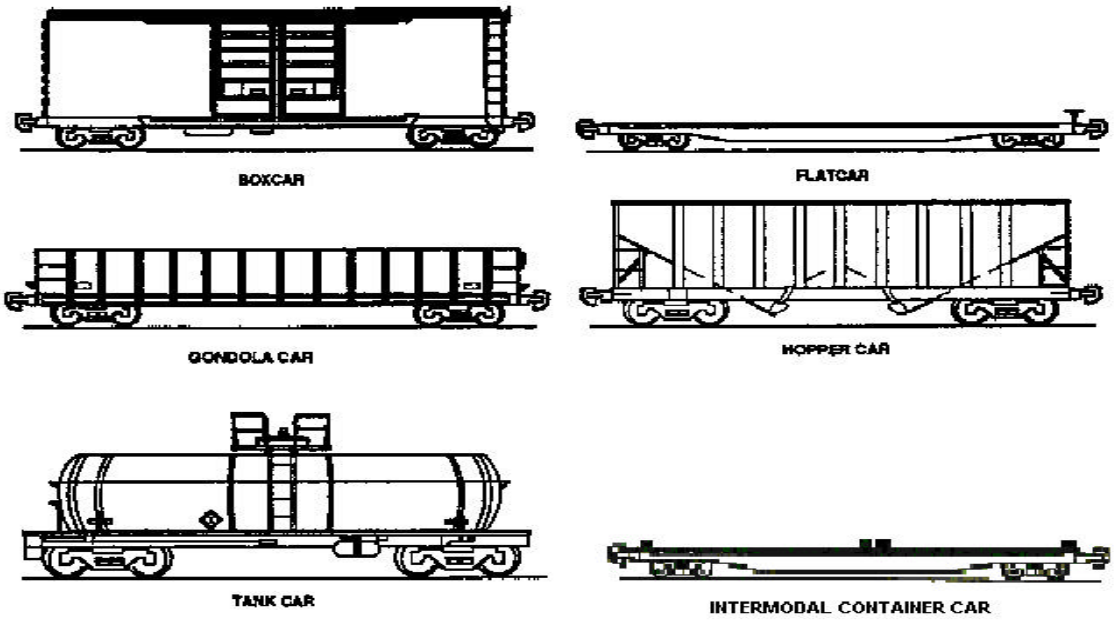

Figure 2-1. Railcar types.

a. Boxcars. Boxcars are utilized for the transportation of various commodities that need protection from the elements and are not in a form compatible with bulk transfer methods. Boxcars provide a good shell for secure blocking and storage. They are available in standard interior lengths of 40', 50', and 60' and up to 86.5' in special service designs, with tonnage capacities ranging from 40 to 100 tons. Cars vary in the length and type of doors, plug, sliding or both, wall and floor construction, load securing systems, and degree and method of underframe cushioning.

b. Tank Cars. Tank cars are utilized for the transportation of a wide variety of liquid commodities. For the Navy the chief commodities are various petroleum fuels and contaminated ship waste. Capacities range from 10,000 gal. to over 34,000 gal. Cars vary in construction (riveted or welded), insulation, material (steel or aluminum), valve type and location, heating method, if any, and undercarriage design (center or stub sill).

c. Flatcars. Flatcars are used for loading items whose dimensions cannot otherwise be accommodated and where protection from the elements is not necessary. The way in which loads are secured is extremely important for loads on flatcars. Flatcars are built in a variety of lengths from 40' up to 89' and capacities of up to 125 tons and more for limited use special service cars when there are more than four axles on the car.

d. Hopper Cars. Hopper cars are built in both covered and uncovered variations. Bulk items such as coal and iron ore are appropriate for open top hoppers. Covered hoppers are used for commodities such as grain or plastic pellets where environmental contamination and protection are necessary. These cars come in a variety of lengths up to 55' and 125-ton capacity.

e. Gondola Cars. Gondola cars are essentially flatcars with sides. They are used for such commodities as pipe, scrap metal, and fabricated steel items. Gondola cars are used for commodities where environmental contamination and protection from the elements are not necessary. The method of loading and unloading is a factor in their use.

f. Intermodal Container Cars. Intermodal container cars are long flatcars designed especially for carrying either piggyback trailers or containers, sometimes called a "TOFC/COFC car." Intermodal cars are equipped with container pedestals and sometimes piggyback trailer hitches.

2. Railcar Components.

Freight railcars are comprised of the basic elements as shown in figures 2-2, 2-3, 2-4A, 2-4B and 2-6.

a. Center Sill and Stub Sill. The center sill is the backbone of the car. It is the main structural element for carrying the loads of the individual car. The center sill also transfers the various longitudinal forces encountered during train operations from car to car. Some tank cars whose design utilizes the tank itself to transfer and carry the various loads usually handled by the center sill have what are called stub sills instead of a center sill.

b. End Sills and Body Side Sill. End sills and side sills run along the end and sides of the underframe and provide structural integrity to the car and reinforce the center sill.

c. Cross Bearers and Cross Ties. The cross bearers and cross ties run perpendicular to the center sill and transfer loads from the deck to the center sill.

d. Body Bolsters and Body Side Bearings. The body bolsters which also run perpendicular to the center sill provide the connection between the railcar's center sill and its trucks. The loads are transferred from the body bolster to the truck at the center plate with side bearings providing stability.

e. Coupler. Couplers transfer forces between the car and the freight cars or locomotive coupled to it. The coupler is comprised of a shank, head, and knuckle. The shank is secured to the draft system, and the knuckle is used to couple to other knuckles on other freight cars. Although there are several types, all couplers used in interchange in the United States and on all Navy railcars will interlock. See Figure 2-4A and 2-4B for illustrations of coupler components. See Figure 2-5 for an illustration of different coupler types.

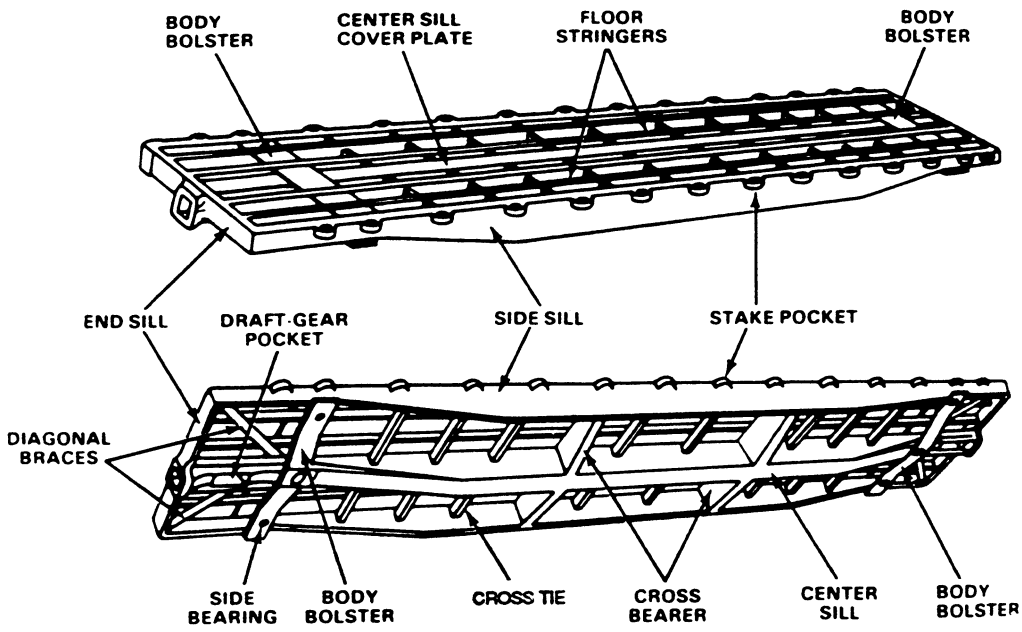

Figure 2-2. Basic railcar components.

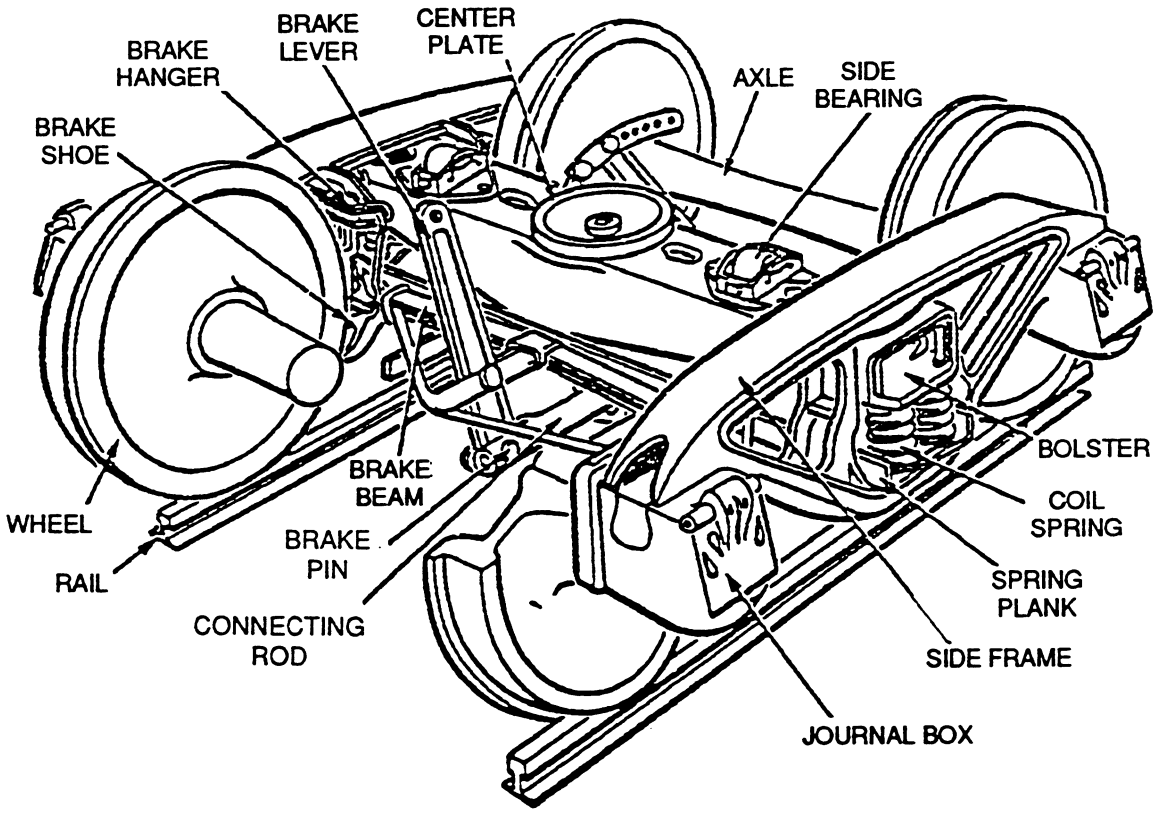

Figure 2-3. Truck components.

f. Draft Gear and Draft Gear Pocket. Each car has some form of draft gear for cushioning the coupler and for absorbing and transferring forces from one car to the next. Draft gears incorporate various types of cushioning devices. See Figure 2-6 for an example of a draft gear system.

g. Trucks. Freight cars have a pair of trucks to transfer the weight of the car to the track and provide a method of guidance. Although trucks may vary from two to four axles, friction or roller bearing, car-mounted or truck-mounted brakes, they all have the same basic components: wheels, axles, journals, side frames, bolster, center plate, side bearings and various brake components including rods, beams, hangers, and shoes. See Figure 2-3 for a description of truck parts.

h. Center Sill Cover Plate. A flat plate riveted or welded across steel center sills, either above or below or both, to give additional strength.

i. Floor Stringers. A term sometimes applied to a floor nailing strip or a steel member that acts as a support for a nailing strip.

j. Diagonal Brace. A horizontal brace extending diagonally from the end sill back to or beyond the bolster.

k. Stake Pocket. A metal receptacle or collar, attached to the side and end sills to receive the end of a stake which supports the side or confines the load.

l. Car Brake Systems. Railroad cars have two braking systems: hand brakes and air brakes. Air brakes are the primary means by which railroad cars are slowed and stopped.

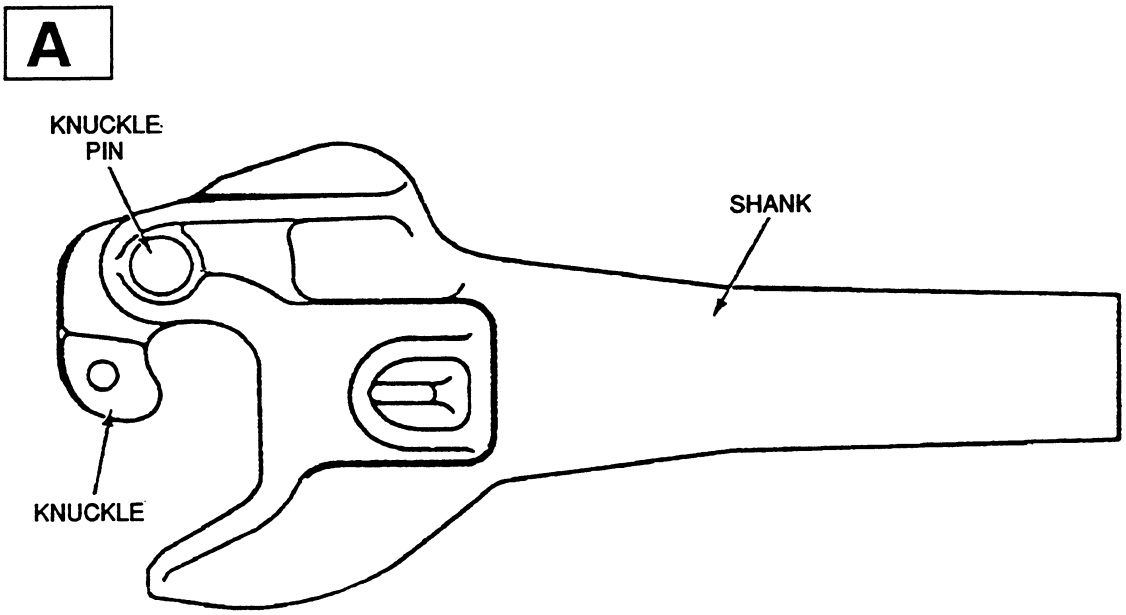

Figure 2-4A. Coupler components.

B

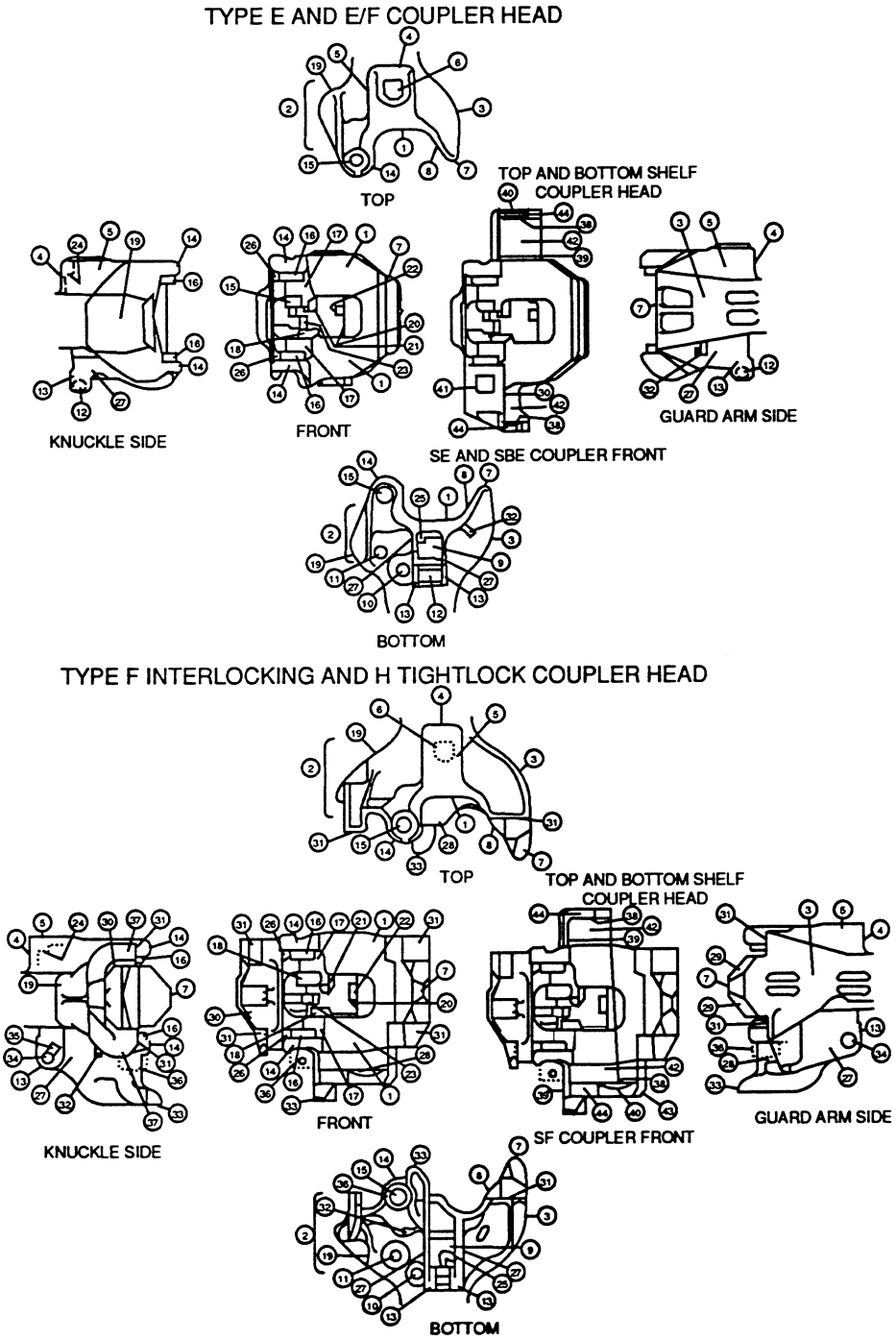

COUPLER HEAD

No	NOMENCLATURE
1	FRONT FACE
2	KNUCKLE SIDE
3	GUARD ARM
4	HORN
5	LOCK CHAMBER
6	TOP LOCKLIFT HOLE (TOP OPERATION ONLY)
7	GUARD ARM NOSE
8	GUARD ARM FACE
9	LOCK HOLE
10	THROWER HOLE
11	DRAIN HOLE
12	ROTARY SHAFT
13	ROTARY SHAFT WALL
14	PIVOT LUG
15	PIVOT PIN HOLE
16	PIN PROTECTOR
17	BUFFING SHOULDER
18	PULLING LUG
19	KNUCKLE TAIL WALL
20	LOCK WALL
21	LOCK GUIDE - KNUCKLE SIDE
22	LOCK GUIDE - GUARD ARM SIDE
23	THROWER RETAINING LUG
24	TOP OPERATION ANTICREEP LEDGE
25	ROTARY OPERATION ANTICREEP LEDGE
26	KNUCKLE STOP
27	LOCK HOLE WALL
28	SUPPORT SHELF
29	VERTICAL GATHERING SURFACE
30	INTERLOCKING WING POCKET
31	LATERAL ALIGNING SURFACE
32	CHAIN LUG
33	AUXILIARY INTERLOCKING LUG
34	ROTOR SHAFT HOLE
35	ROTOR SHAFT KEYWAY
36	INVERTED PIN SUPPORT
37	INTERLOCKING LUG
38	RETENTION SURFACE
39	KNUCKLE SIDE SUPPORT WALL
40	CHAMFER
41	COTTER KEY OPENING
42	BACK SUPPORT WALL
43	GUARD ARM SIDE SUPPORT WALL
44	SHELF FRONT FACE

Figure 2-4B. Coupler components, continued.

E-Styles

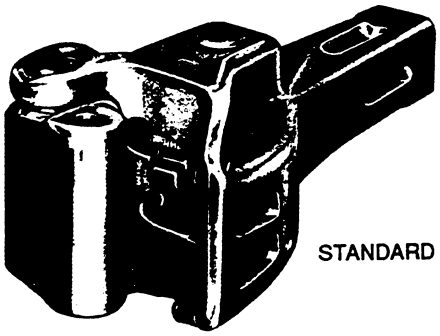

STANDARD 'E'

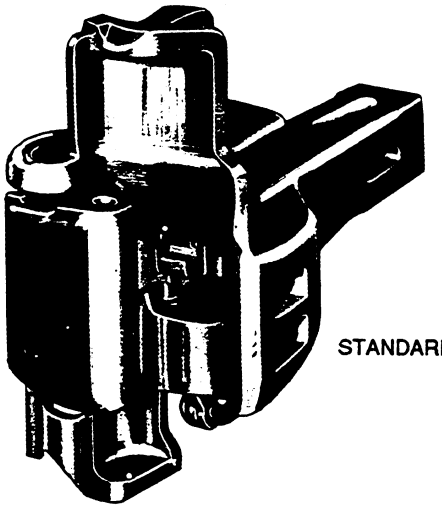

STANDARD 'SE'

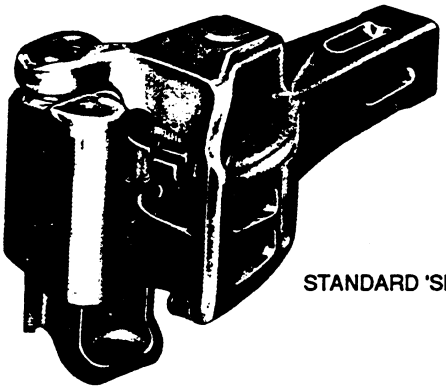

STANDARD 'SBE'

F-Styles

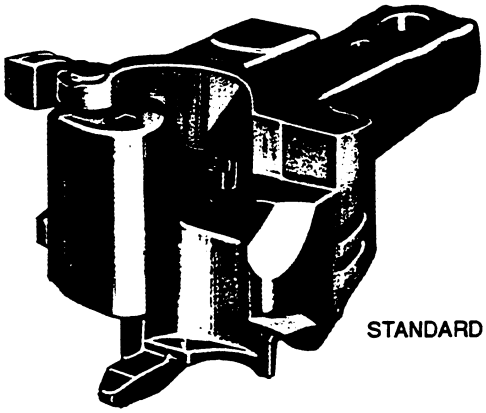

STANDARD 'F'

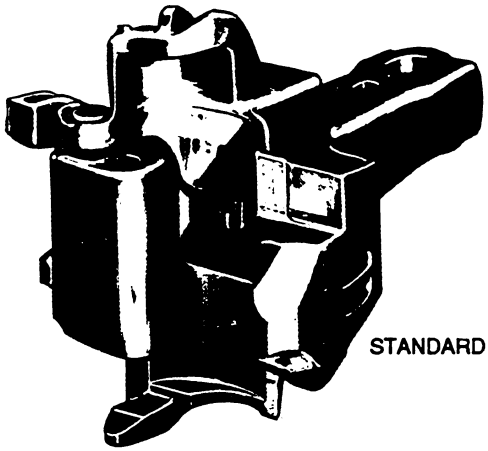

STANDARD 'SF'

Figure 2-5. Coupler types.

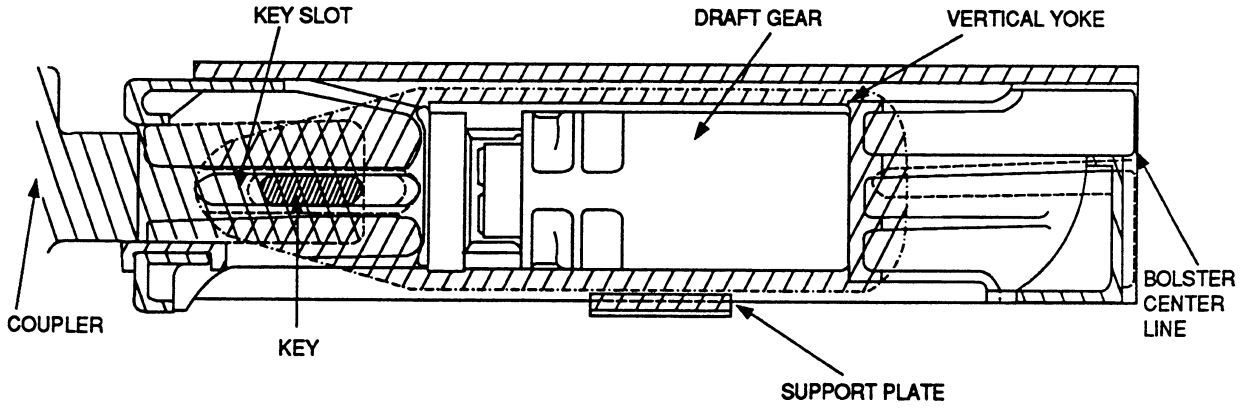

Figure 2-6. Example of a draft gear system.

m. Hand Brake Systems. Hand brakes are mechanical linkages operated by railroad personnel to manually apply the brake shoes to the railcar wheels. As with locomotives, all cars are equipped with hand brakes to be operated in normal service. Hand brakes are used to secure cars after they are spotted and to stop a car in an emergency or for special switching moves. Hand brakes are usually located on only one end of a car and this end is called the "B" end. Cars with hand brakes at each end of the car will have one end stenciled "B End." Hand brakes shall be applied when required, using proper procedures to avoid potential accidents and serious injuries.

n. Air Brake Systems. An assembled freight car with trucks also has an air brake system. This system is composed of air hoses, an air line, brake valve, brake cylinder(s) and assorted linkages, rods and chains, and a handbrake connection. As previously noted, the brake cylinder(s) may be mounted on either the car body or trucks. See figure 2-7 for a typical air brake system layout.

(1) Typical Components of Air Brake Systems. See figures 2-7 and 2-8 for a schematic of a railcar brake system's air and mechanical components.

(a) Brake pipes carry compressed air.

(b) Brake valves control the brake applications.

(c) Brake cylinders apply the braking force.

(d) Brake rigging transfers the braking force to the brake shoes.

(e) Brake shoes apply the force to the railcar wheels.

(f) Other components are sometimes required. Actual valve, cylinder and shoe types vary and some long or special service cars require various additional valves for a properly functioning air brake system. An example is a modulator valve required for some cars using composition shoes.

(2) Functioning of Air Brake Systems. Air brake systems operate through storage reservoirs that are located on each car and are charged with compressed air. These reservoirs are separated from the brake pipe which delivers the compressed air by a brake valve. The brake valve senses pressure drops in the brake pipe and utilizes compressed air from the reservoir to apply the brakes. Since a pressure drop initiates brake applications, the design has a built-in break-in-two safety feature. A significant quick loss of air, such as would occur in a break-in-two, will result in an automatic emergency (full force) application of the brakes using air located in a separate emergency reservoir.

The air brakes are controlled from the control stand in the locomotive. The operator moves the automatic brake valve to release air in the brake pipe. This loss in air pressure is sensed by the individual brake valves on each railcar in the consist. Each railcar brake valve then applies air pressure (in direct proportion to the brake pipe reduction caused by the operator) from the air reservoir located on the railcar to the brake piston thus applying the brakes on the railcar. To release the brakes, the operator restores pressure to the brake pipe by placing the automatic brake valve in the release position. The brake valves on each railcar in the consist sense the increasing pressure and exhaust the brake piston pressure and thus release the brakes. Brake pipe pressure is then used to recharge the air reservoir on the railcar. After a period of time equilibrium will again be reached, the brake pipe will be at its feed cock pressure, all brakes will have released, and all railcar air reservoirs will be fully recharged.

(3) Types of Brake Systems. Railroad cars found on Naval Activities have a variety of air brake systems ranging from the K type brake on older cars to ABDW types of braking systems on the newest cars with AB and ABD systems being the most common.

(a) K Brake Systems. The K series of brake valves, KC for a brake cylinder combined with the air reservoir and KD for the brake cylinder being detached from the air reservoir, came into use in the early 1900s. Only the oldest of the Navy's cars have this type of system and they are being phased out. See Figure 2-9 for a picture of a KC brake valve and air reservoir.

(b) AB Brake Systems. The AB brake provided the following advances over the K type: slight brake pipe pressure reductions do not cause unintended brake applications; quick service propagation is twice as fast; releases and recharges are faster; brake cylinder pressures are more even; and there is less sensitivity to brake pipe leakage. On AB brake systems, the brake valve, brake cylinder, and air reservoir are mounted separately. See Figure 2-10 for an illustration of AB brake valve.

(c) ABD Brake Systems (1961). The main advancement over the AB valve is the use of diaphragms and 0-rings in place of pistons which reduce wear, weight and repair complexity. See Figure 2-10 for an illustration of an ABD brake valve.

(d) ABDW Brake Systems (1976). This is the current brake system installed on all new cars. Its main advancements over the ABD are faster brake applications and continuous, quick action through an accelerated service application valve. See Figure 2-10 for an illustration of an ABDW brake valve.

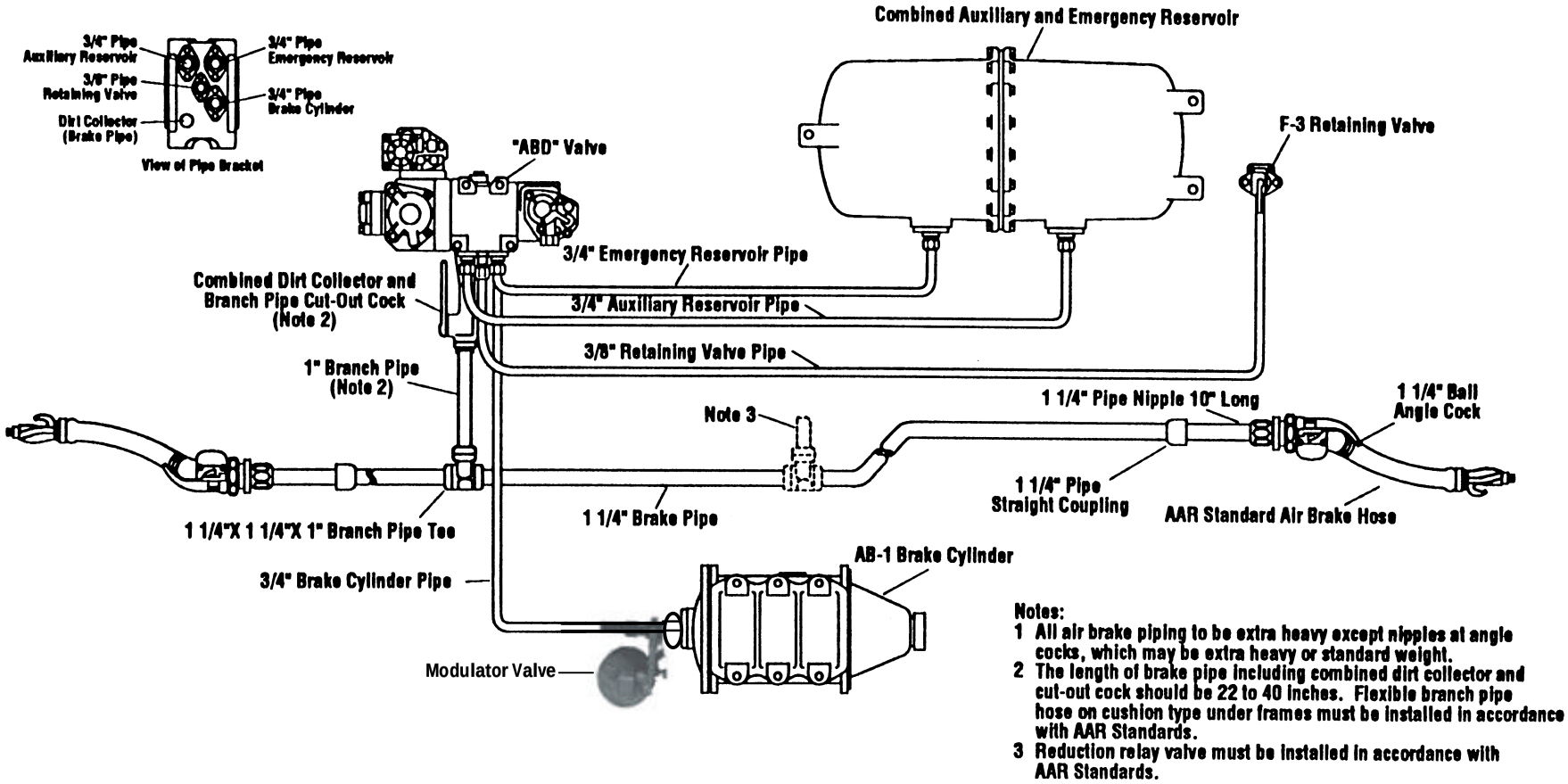

Figure 2-7. Railcar brake system's air components.

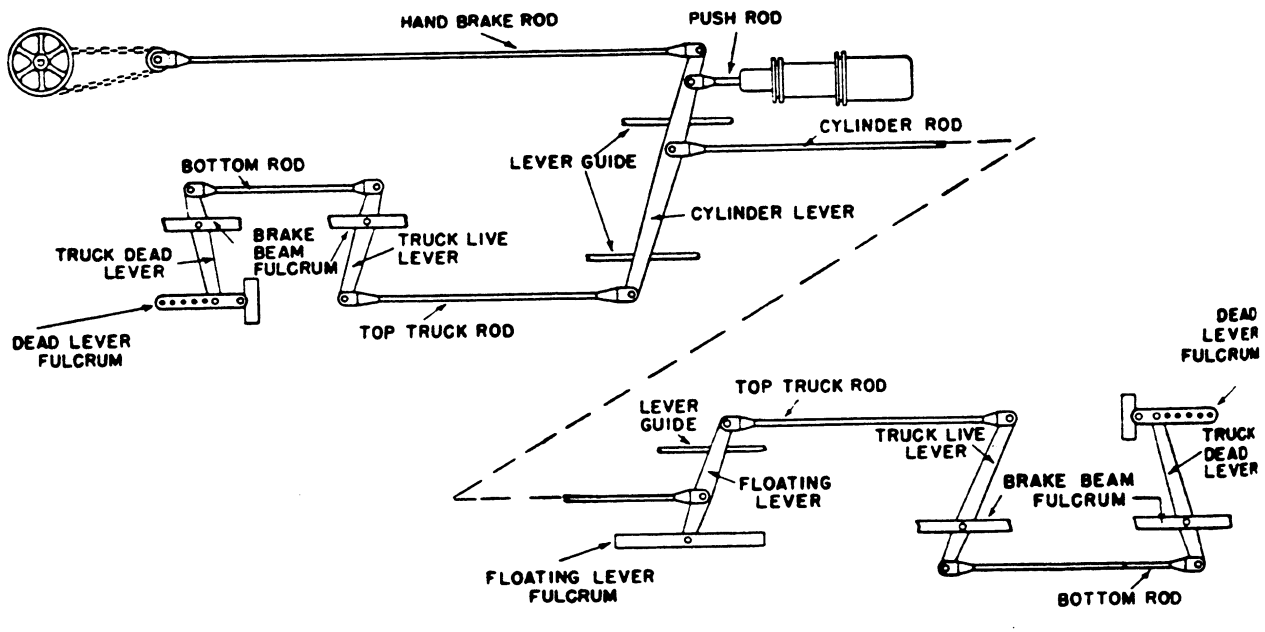

Figure 2-8. Railcar brake system's mechanical components.

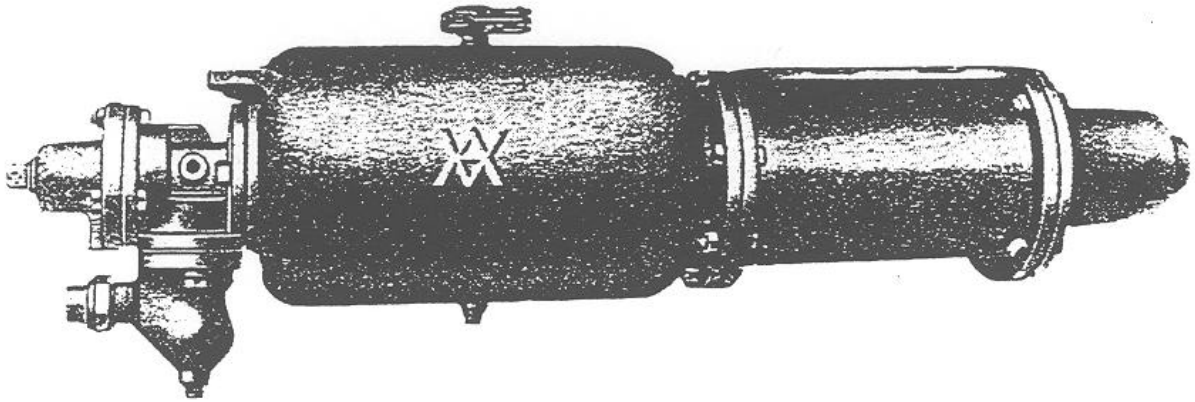

Figure 2-9. KC brake valve and reservoir.

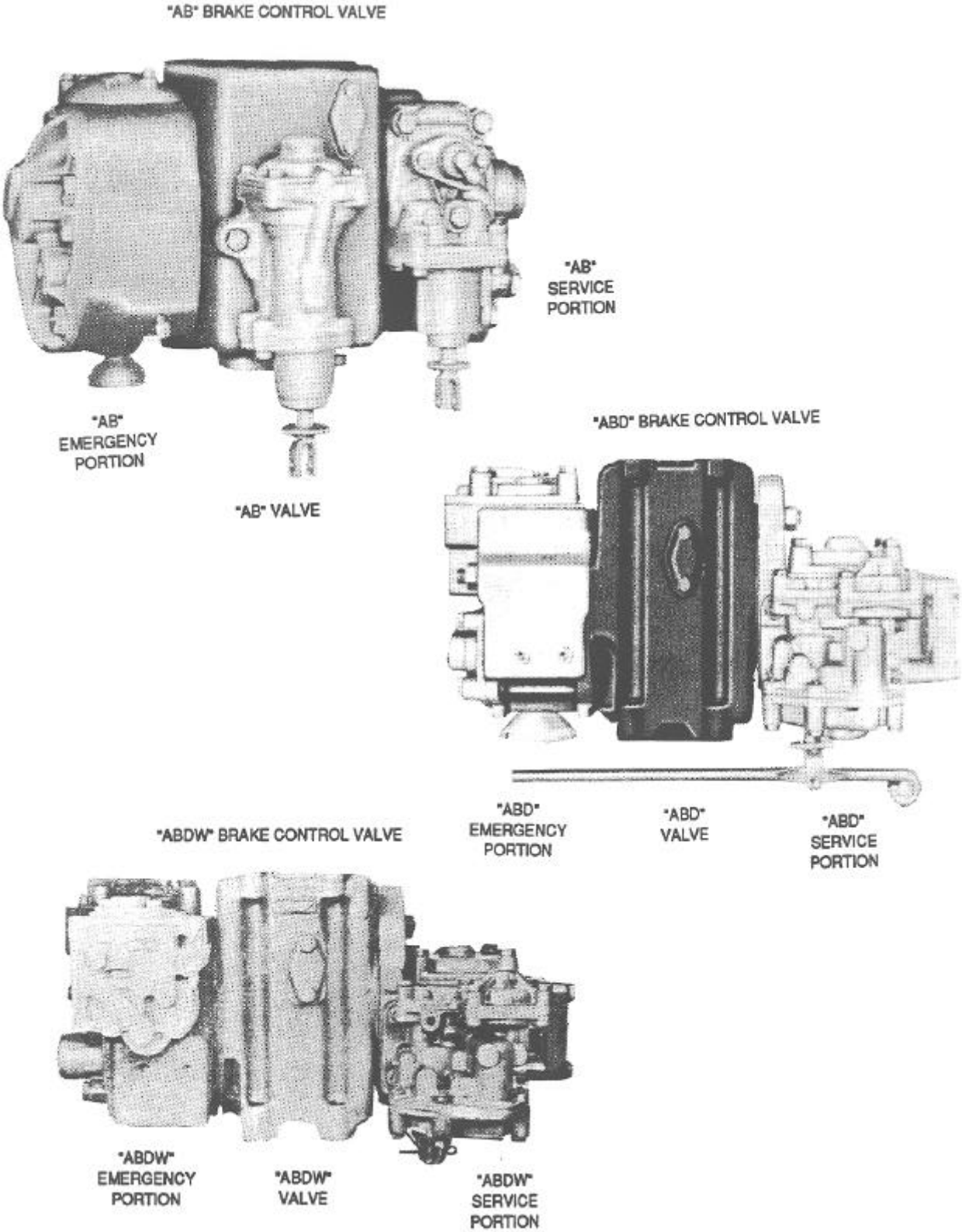

Figure 2-10. AB/ABD/ABDW type service brake valves.

3. Navy Locomotives.

a. Locomotive Types. See Figures 2-11 to 2-13 for diagrams and pertinent facts for the locomotives listed below.

SW-1200	120 ton	Baldwin	120 ton
GE	80 ton	GE	65 ton
GE	44 ton		

(1) EMD SW-1200 120-Ton Locomotive. These locomotives combine the ability to achieve significant levels of tractive effort due to their weight of 120 tons and an engine rated at 1,200 horsepower with the flexibility of a switch engine configuration. The windows have been enlarged for enhanced visibility during switching operations. They are capable of being linked in multiple unit (MU) operation when higher tractive effort is needed. These units have been totally rebuilt before entering the fleet and have upgraded control stands complete with series 26-NL braking systems.

1,200 hp
72,000 lbs. starting tractive effort at 30 % adhesion
37,000 lbs. continuous tractive effort at 10 mph
Max. operating speed - 45 mph
Min. curve radius - 154 ft.
Weight - 240,000 lbs.

(2) Baldwin 120 Ton Locomotive.
1,200 hp
72,000 lbs. starting tractive effort at 30 % adhesion
37,000 lbs. continuous tractive effort at 10 mph
Max. operating speed - 50 mph
Min. curve radius - 154 ft.
Weight - 240,000 lbs.

(3) GE 80 Ton Locomotive.
500 hp
48,000 lbs. starting tractive effort at 30 % adhesion
15,000 lbs. continuous tractive effort at 10 mph
Max. operating speed - 30 mph
Minimum curve radius - 75 ft.
Weight - 160,000 lbs.

(4) GE 65 Ton Locomotive.
400 hp
39,000 lbs. starting tractive effort at 30 % adhesion
12,000 lbs. continuous tractive effort at 10 mph
Max. operating speed - 40 mph (45 if rebuilt)
Minimum curve radius - 75 ft.
Weight - 131,000 lbs.

(5) GE 44 Ton Locomotive.
300 hp
27,000 lbs. starting tractive effort at 30 % adhesion
9,000 lbs. continuous tractive effort at 10 mph
Max. operating speed - 20 mph
Min. curve radius - 50 ft.
Weight - 88,000 lbs.

b. Locomotive Propulsion and Braking Systems.

(1) Power Generation System. The Navy's equipment fleet for the movement of railcars consists of diesel-electric locomotives, along with a few car movers at select locations. Diesel-electric locomotives use diesel engines coupled to a generator or alternator to produce dc current that powers dc traction motors located on the locomotives' axles. Locomotives are both one- and two-diesel engine designs. Some can only be operated independently, and others can be operated together in multiple unit (MU) service. In MU service, the coupled units are all controlled by only one of the units. Some units also have a road/switch capability that changes the operating characteristics of the unit depending on the use. When locomotives are rehabilitated, current policy is to standardize all locomotives to the 26-L series brake system, or better, and the AAR control stand. See Figures 2-14 and 2-15 for pictures of a typical 26-L series brake and AAR control stand.

(2) Locomotive Traction system. Diesel-electric engines are controlled by a governor that maintains a constant engine speed and a load regulator that maintains constant power output for each power setting selected by the operator. The actual tractive effort transferred to the rail may be limited to less than the power setting by reduced adhesion due to such factors as contaminated rail (grease, grass, water, etc.) and lack of sand applied to the rail. Wheel slip will occur in these cases, and on certain locomotives power output is automatically reduced for predefined periods of time until wheel slip is corrected.

(3) Locomotive Brake system. Each locomotive has an independent and automatic air brake valve and a mechanically operated hand brake.

The independent brake controls only the brake cylinders on the locomotive. It is the primary way of reducing the locomotive speed when the locomotive is being operated with no cars.

The automatic brake valve controls both the car(s) and locomotive(s) brakes and is the primary means of reducing train speed. The locomotive brakes are bailed off, (released), by the operator until shortly before the complete stop.

The hand brake is used to secure the locomotive any time it is left unattended or attempts to stop the locomotive in an emergency if the air brakes fail to function.

Navy locomotives are equipped with various brake systems (6RL, 24RL, 26L series, etc.) See Figure 2-16 for a schematic of a typical series 26-L locomotive air brake system.

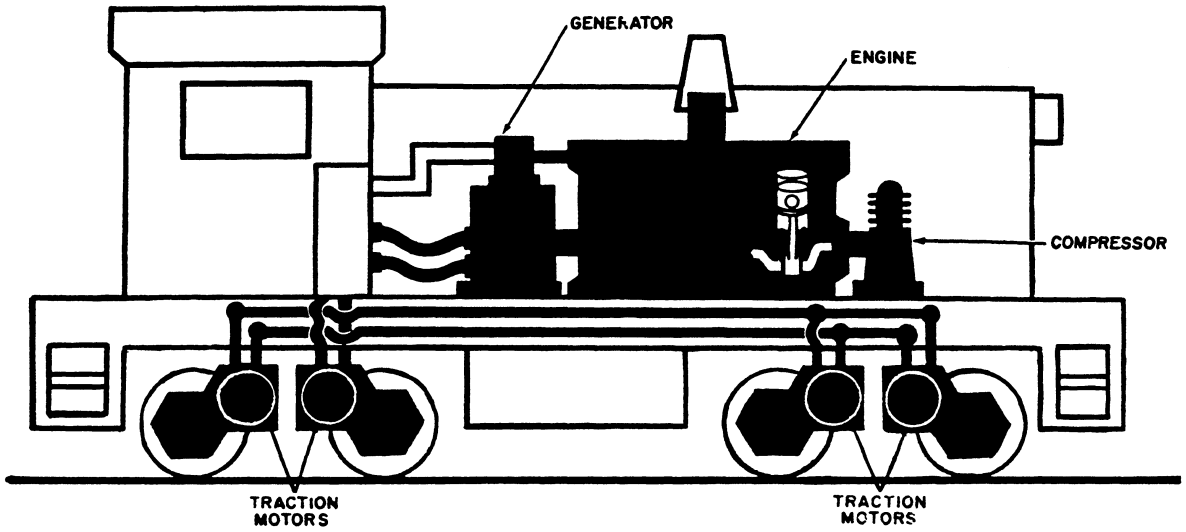

Figure 2-11. End-cab locomotive.

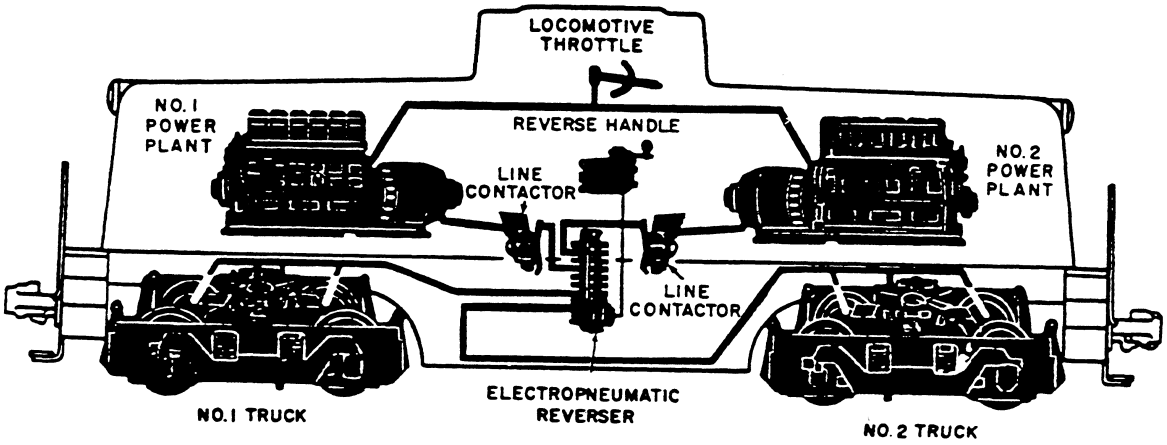

Figure 2-12. Center-cab locomotive.

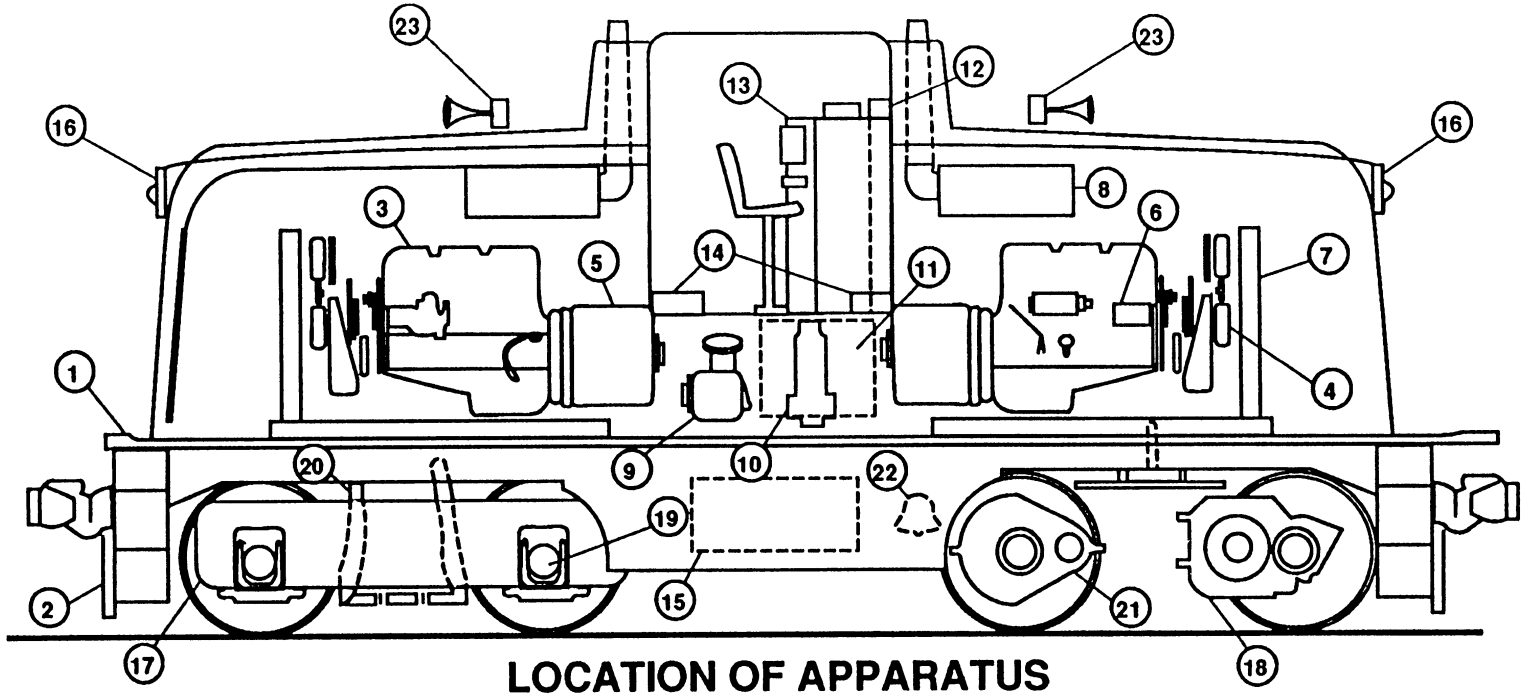

LOCATION OF APPARATUS
65-TON DIESEL-ELECTRIC LOCOMOTIVE

1. PLATFORM
2. ENDPLATE-STEPS
3. DIESEL ENGINE
4. FAN
5. TRACTION GENERATOR
6. ALTERNATOR-BATTERY CHARGE
7. ENGINE COOLING RADIATOR
8. EXHAUST MUFFLER
9. AIR COMPRESSOR
10. AIR BRAKE EQUIPMENT (RS)
11. HI VOLTAGE CONTROL (LS)
12. LOW VOLTAGE CONTROL
13. AAR CONTROL STAND
14. CAB HEATER
15. BATTERY (LS)
16. HEADLIGHT
17. TRUCK
18. TRACTION MOTOR
19. AP JOURNAL BOX
20. BRAKE HANGER
21. GEAR BOX
22. BELL
23. HORN

Figure 2-13. Location of apparatus, 65-ton diesel electric locomotive.

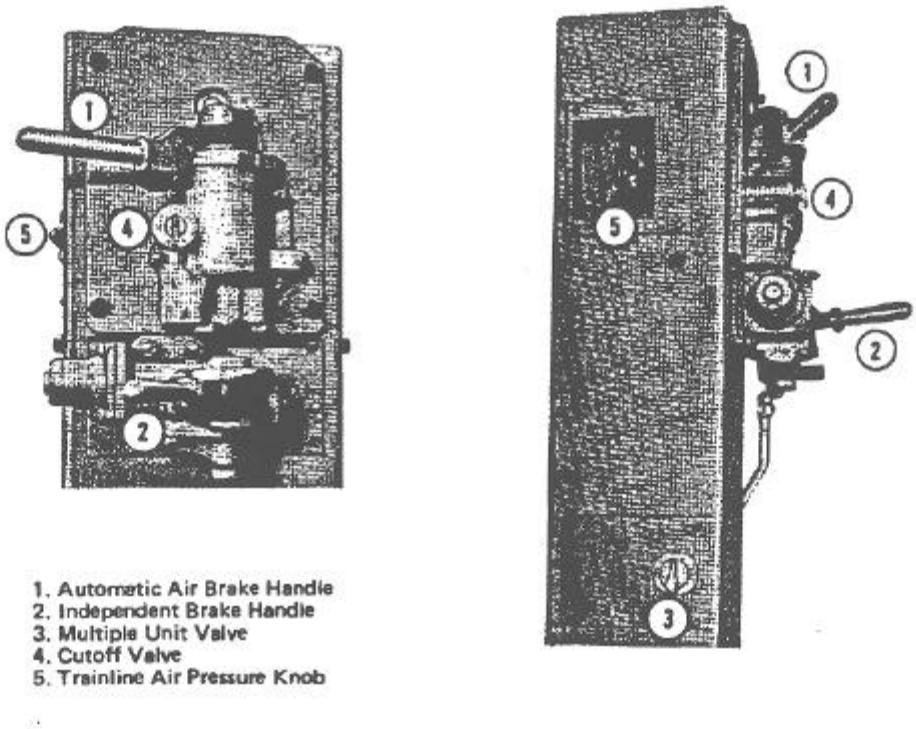

Figure 2-14. 26-L air brake control equipment.

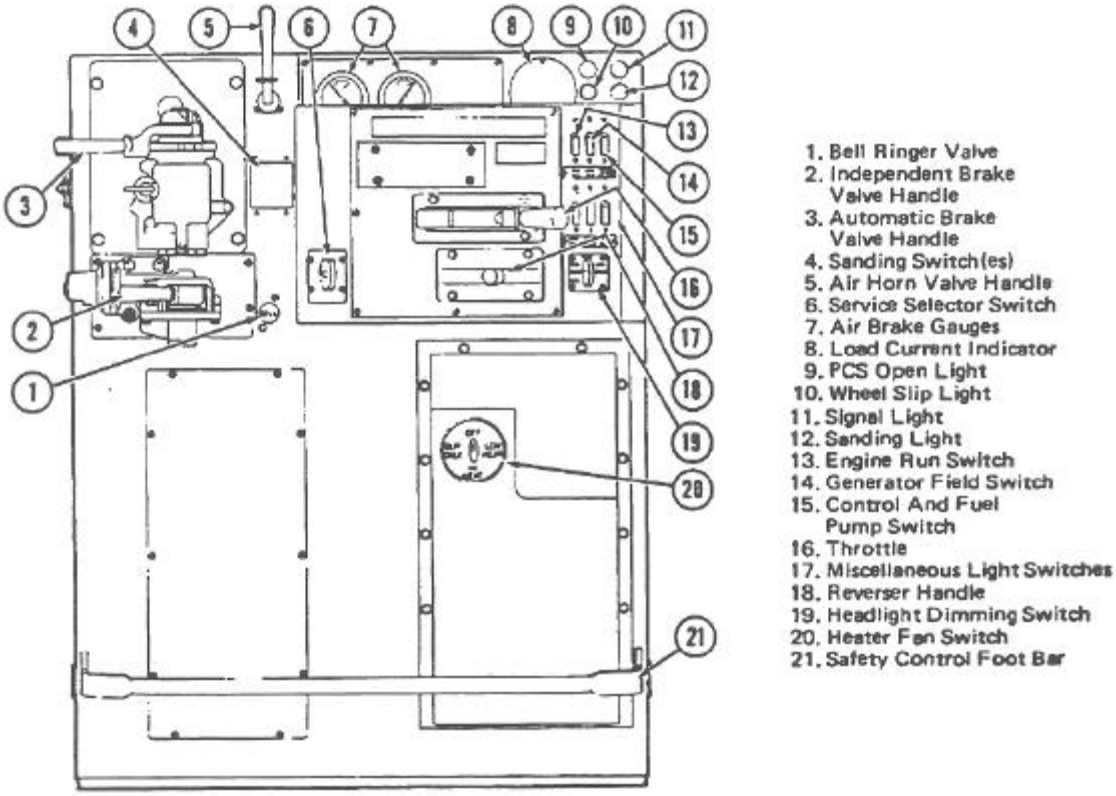

Figure 2-15. AAR-105 control stand.

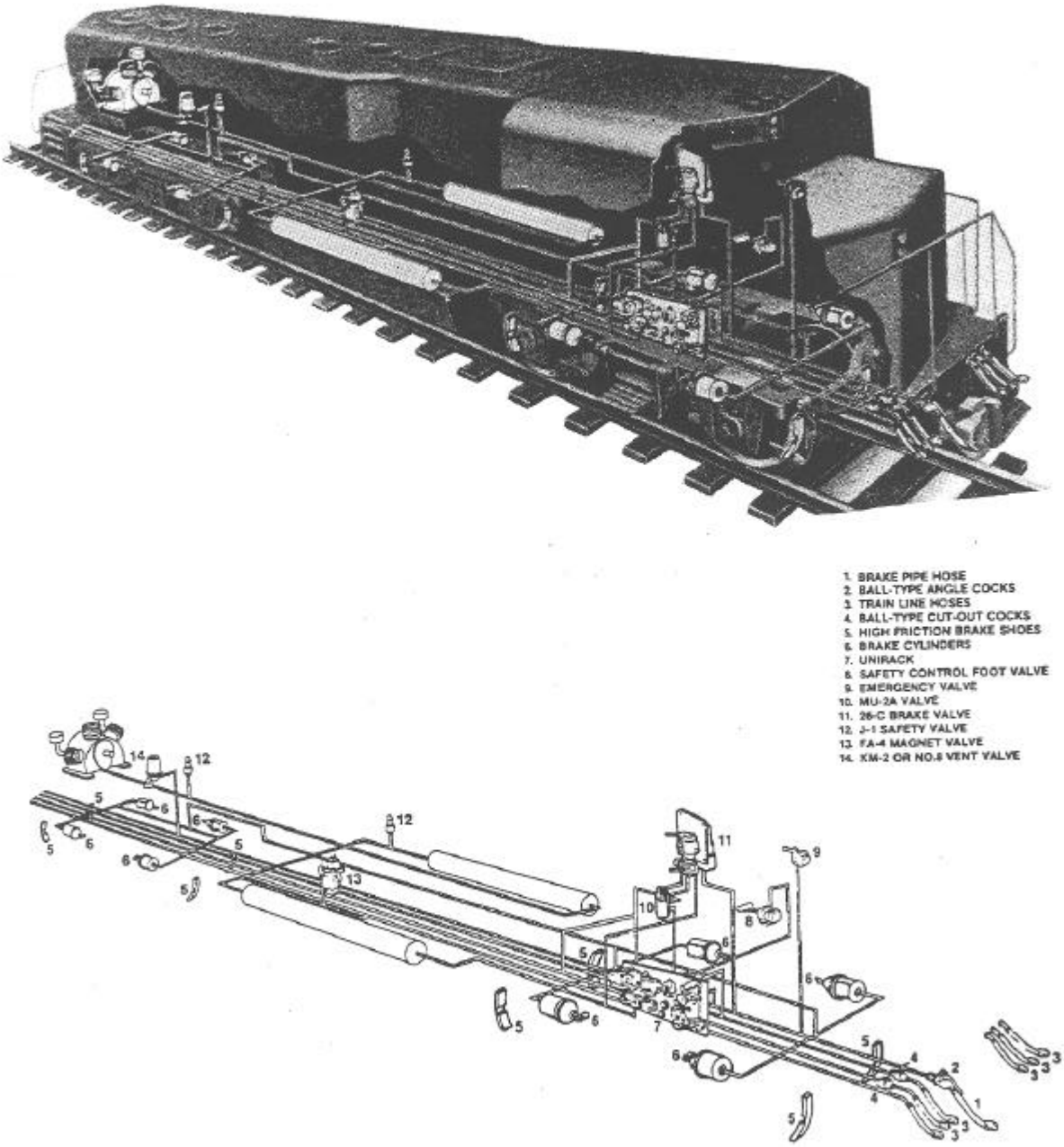

Figure 2-16. 26-L brake system related devices.

4. Miscellaneous Equipment.

a. Cranes. The movement of cranes over railroad trackage shall be conducted with extreme caution. Cranes usually have a shorter distance between trucks and track loading is more concentrated than with most railcars. Thus, care shall be taken on track with a lesser class rating that may be adequate for other loads. The boom of a crane may exceed normal railcar plate/clearance envelope dimensions and a crane shall be handled as a high wide load with all potential clearance problems considered before the movement. When possible, cranes should be moved with the boom trailing so as to minimize accident risk if the boom swings outward. Cranes shall not be moved in excess of their rated speeds. If the crane is not being moved under its own power, drive train issues shall be resolved prior to the movement. All railroad cranes shall be properly weight tested and certified in accordance with NAVFAC P-307 before putting into service.

b. Car Movers. Car movers are vehicles that can operate on the rail or roadway. When on the rail they are supported by both small steel flanged wheels and rubber tires. The rubber tires are used for tractive effort and braking. All car movers have a coupler for coupling to railcars and some are also capable of operating the air brakes on the coupled railcars. See Figure 2-17 for an example of a car mover.

Car movers shall be operated as a locomotive and shall not be placed on any track until permission is granted from the dispatcher. The number of cars moved at one time shall not exceed the rated capacity of the car mover and in no case shall exceed what can be safely stopped. Care shall be taken at any signalized crossings as the car mover may not activate the crossing signals. The dispatcher shall be notified immediately after the car mover is clear of the track.

c. Hy-Rails. Hy-rails are vehicles used for both rail and roadway operation. Anything from a passenger car or a pickup truck to a large crane can be outfitted with hy-rail attachments. When on the rail, guidance is provided by small steel flanged wheels. Propulsion and braking are achieved either through the rubber tires or the steel wheels, depending on the hy-rail design. See Figure 2-18 for an example of a vehicle equipped with hy-rail attachments.

Hy-rails shall not be placed on any track until permission is granted from the dispatcher. Care shall be taken at any signalized crossings as the hy-rail may not activate the crossing signals. The dispatcher shall be notified immediately after the hy-rail is clear of the track.

d. Other Rail Equipment. In addition to the above equipment, there are other pieces of equipment which move over track. Examples include: track maintenance motor car, man-over-wheels (MOW) car, gang car, spotter car, push car, tamper, tie inserter, brush cutter, maintenance speedswing, handpowered track maintenance equipment, etc.

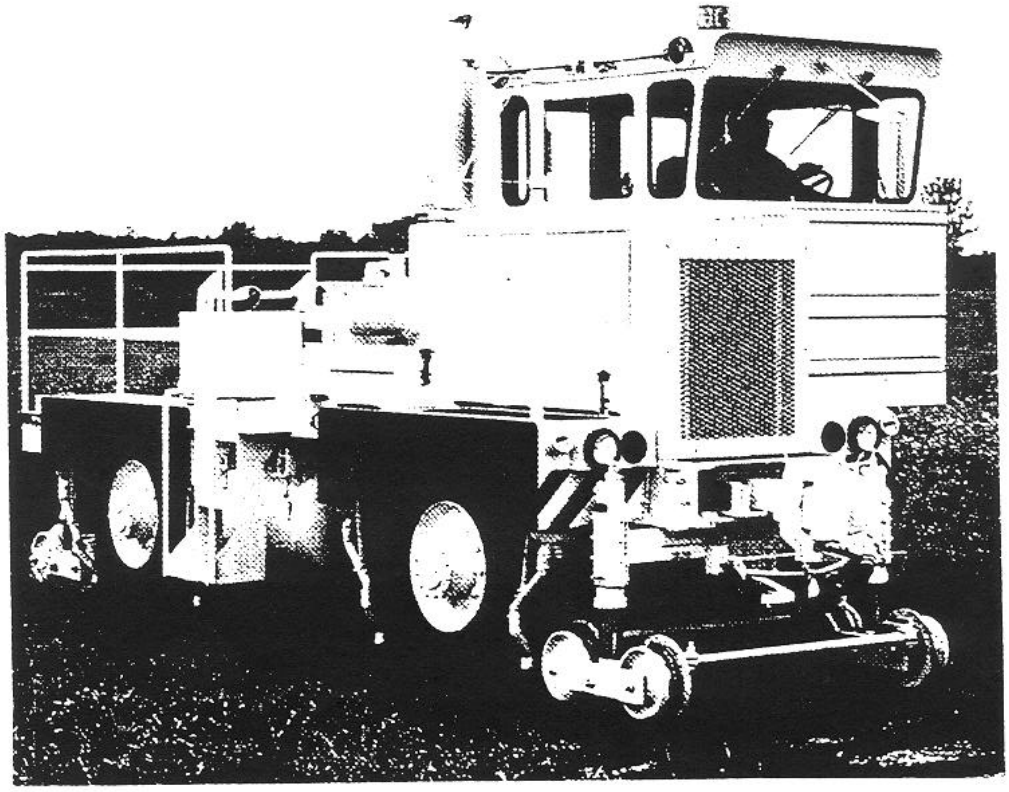

Figure 2-17. Example of a **car mover.**

Figure 2-18. Example of a hy-rail vehicle.

5. Railway Track

The railway track at Naval Activities consists of several basic elements. These elements include the roadbed (ballast, subballast, and subgrade), ties, tie plates, rail, gauge rods, point guards, and switches. There are also spikes to secure the rail and tie plate to the tie, joint bars, and nuts and bolts to secure one rail section to another, and finally switch components such as frogs, switch points, stock rail, switch ties, and switch stands. All trackage shall be certified in accordance with the NAVFACINST 11230.1 series.

a. Track Components. See Figures 2-19 to 2-21 for illustrations of various track structure components. The weight of a rail section is measured by pounds per yard. The gauge of the track is measured 5/8 of an inch below the head of the rail and standard gauge is 56 ½ inches. Rail specifications are stamped on the side of the rail. This includes manufacturer, date of manufacturer, rail section designation (includes rail weight), and the manufacturing process.

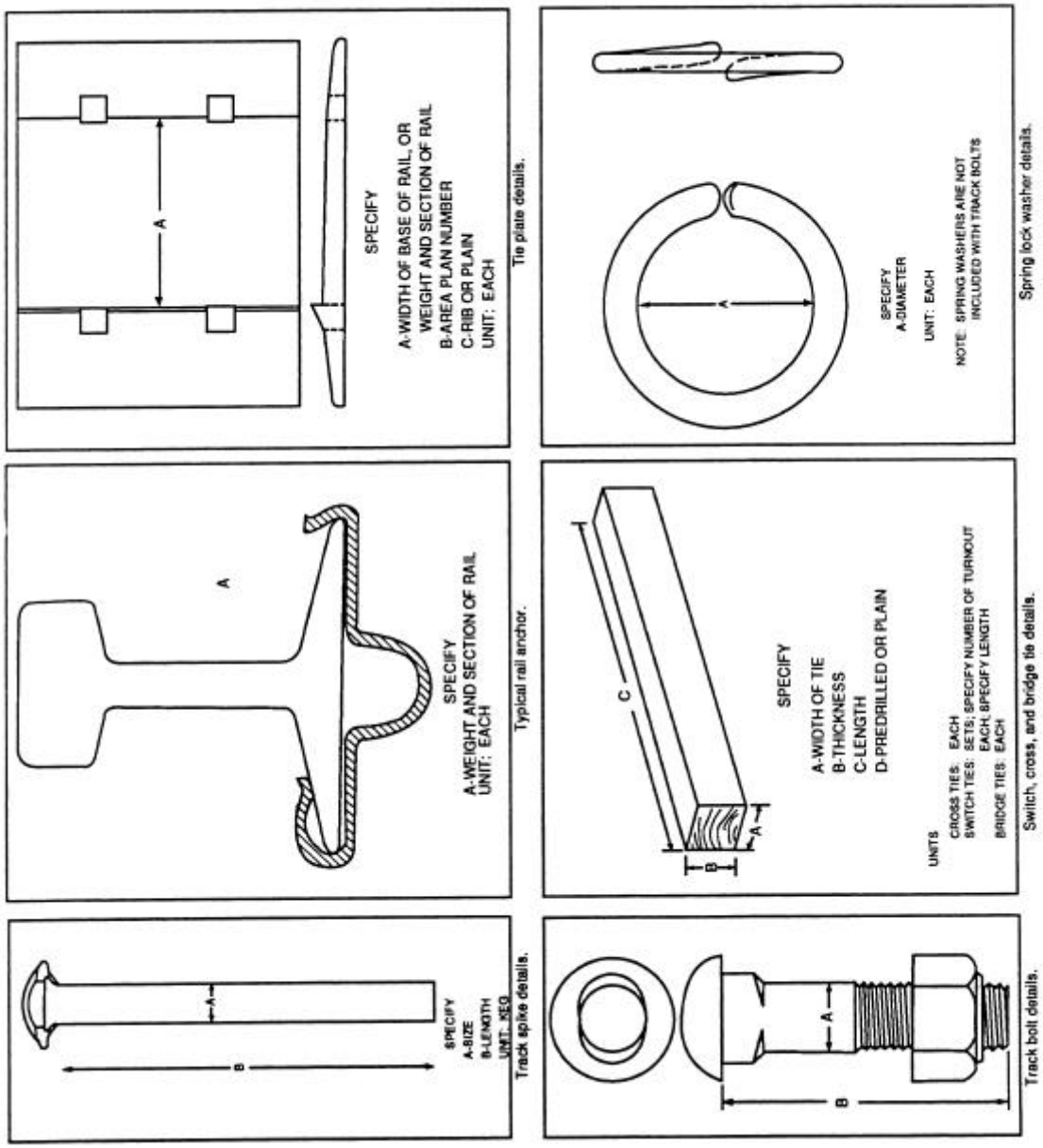

Figure 2-19. Basic track components.

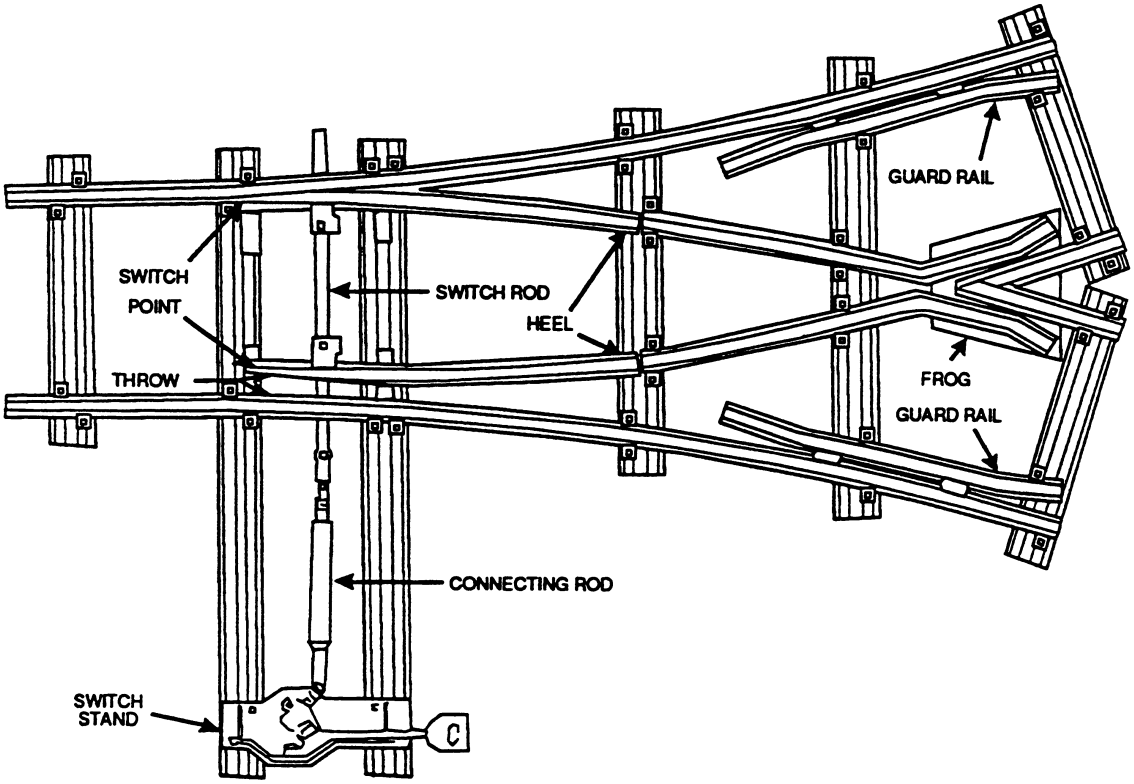

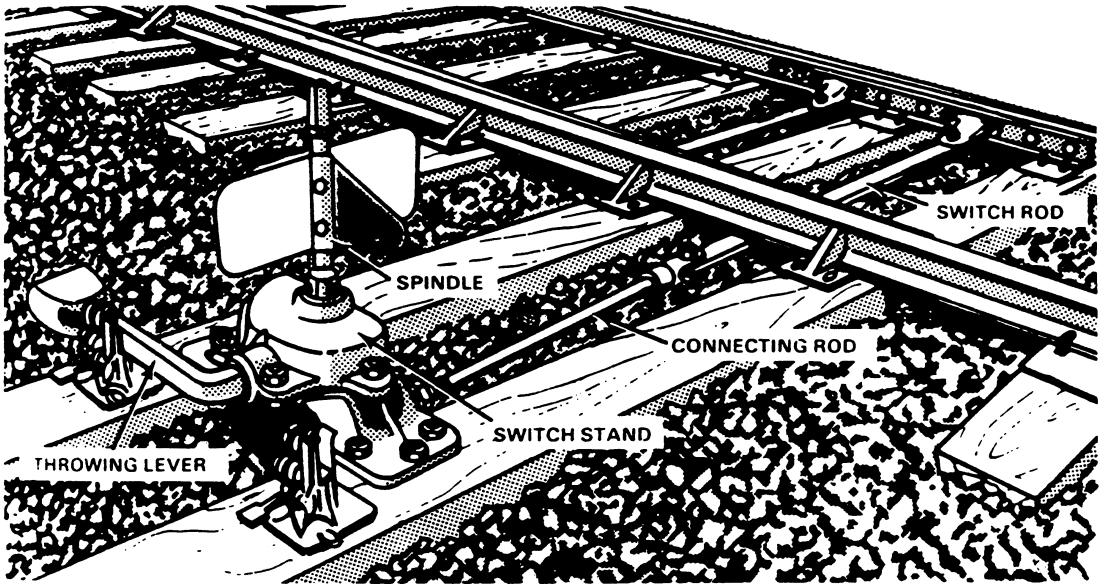

Figure 2-20. Basic switch components/switch stand assembly.

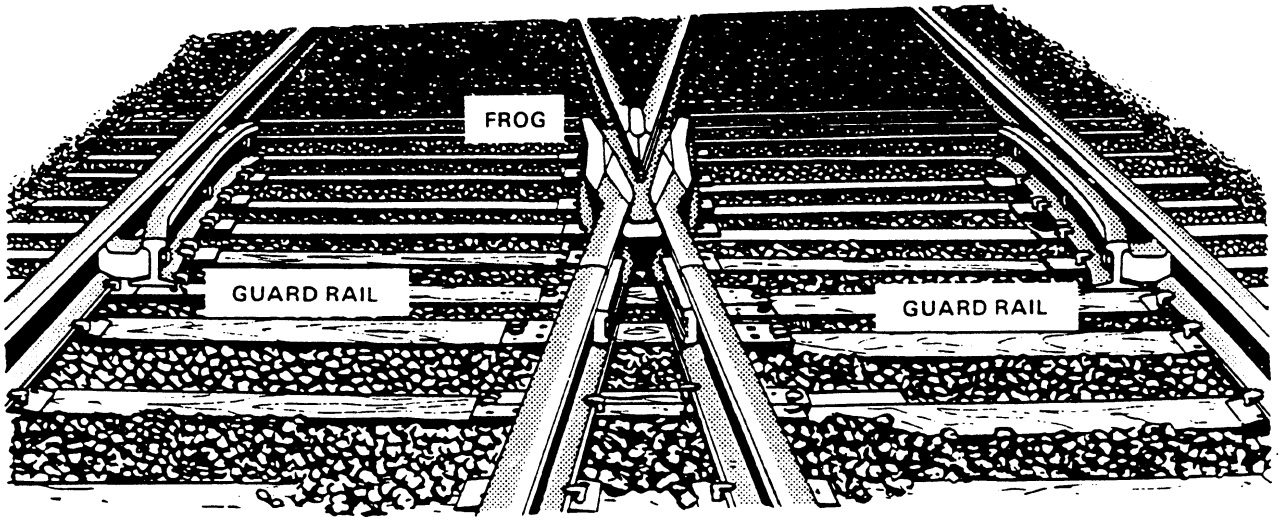

Figure 2-21. Track frog and guardrails.

b. Track Geometry.

Track geometry includes such items as gauge, line, surface, cross-level, superelevation, and profile. Every member of a train crew should be on the lookout for signs that the track geometry is unsafe. The simplest example is wide gauge that could cause a wheel drop derailment. Wide gauge often exists where tie condition is poor, where several spikes in a row are missing, or in curves. It can often be spotted by wear marks in one of the rails that only extend partway across the rail. Several low joints in a row can be a serious track geometry defect if it sets up conditions for harmonic rock and roll, and consequently a wheel lift derailment. Although these and other types of cross-level defects are often hard to spot, if the train is observed closely, its motion can often indicate a situation that should be reported. Figures 2-22 and 2-23 show how the measurements of gauge and cross-level are made.

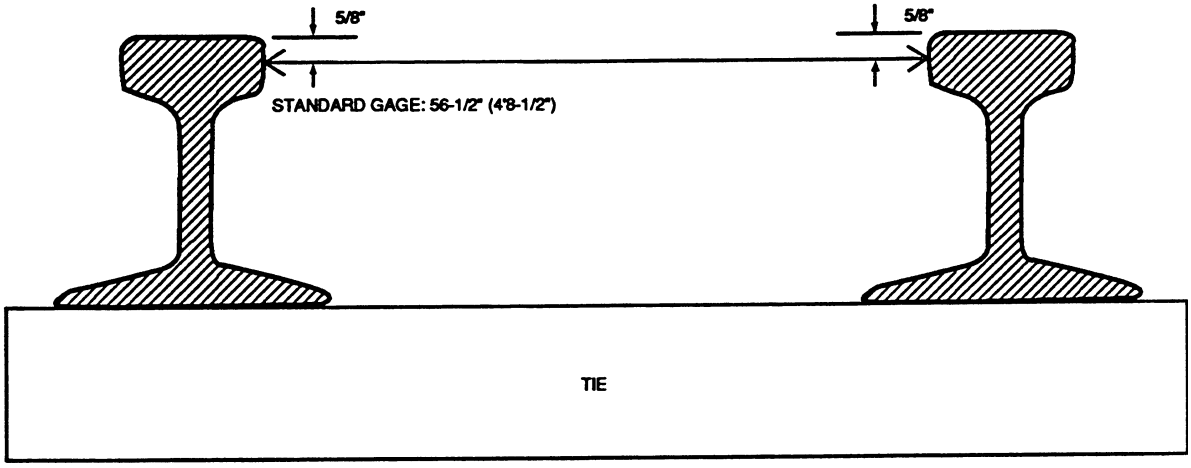

Figure 2-22. Gauge measurement.

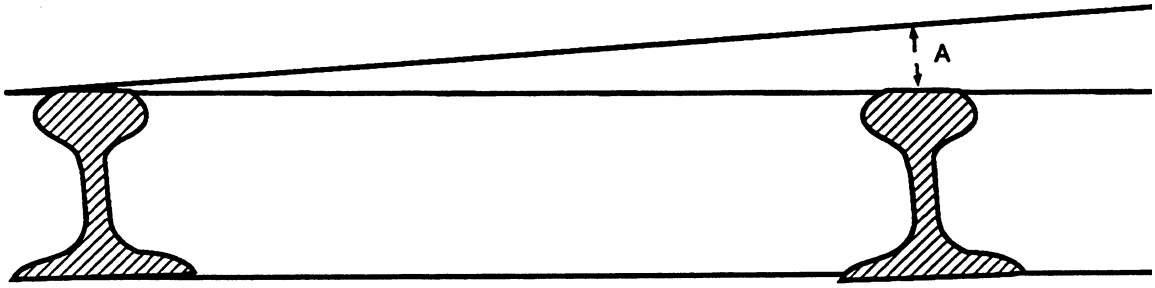

Figure 2-23. Cross-level measurement.

INTENTIONALLY LEFT BLANK

Section 3.
OPERATIONS, PRACTICES AND PROCEDURES

1. Basic Skills

The recommended practices contained herein shall not be considered as all inclusive. Situations not covered require sound judgment in applying correct principles of safety. Exercising good judgment and avoiding carelessness are paramount to any safe operation.

a. General Guidelines.

(1) Proper clothing is necessary to work safely. Personnel shall wear clothing that will not interfere with vision, hearing or free use of hands and feet; shoes shall be suitable for duties in which engaged. The wearing of thin soled shoes or unbuckled overshoes, loose, torn or baggy clothing, or clothing soaked with oil, grease or solvents, is unsafe. Safety shoes are recommended. Safety equipment shall be worn as required by local railroad operating directives (Standard Operating Procedures (SOP), Station Instructions, etc.). For example, local operating directives may require personnel to wear gloves to protect their hands and engineers to wear goggles or safety glasses to protect their eyes from airborne particles in and around the locomotive compartment.

(2) When working with moving equipment, secure hand grips and footing are essential. Always expect a movement in any direction at any time and be prepared for severe jolts.

(3) Railroad work often requires heavy lifting of awkward objects. Protecting your back requires personnel to remain physically fit and to follow accepted safe lifting methods. See Figure 3-1 for the correct method of lifting.

(4) When watching for signals in the direction opposite the train movement, exercise extreme care to avoid being struck by obstacles. Train work frequently involves close clearances.

(5) Walking near tracks and crossing tracks on foot:

- Avoid standing or walking on the track except when necessary.
- When in the vicinity of any track, maintain constant vigilance for any train movements.
- When crossing over tracks, look in both directions for approaching trains, locomotives, or cars before crossing tracks, and step over the rails - not on them.
- When possible, cross over tracks in areas designated for that purpose.
- If crossing between two cuts of cars is necessary, cross midway between the cuts.

b. Locomotive Safety.

(1) Only authorized personnel shall be permitted in the engine room or cab of a locomotive.

(2) The engine room, cab catwalks, steps and grab-irons shall be kept clear of debris and free from oil, grease, and rags.

(3) When transporting equipment on locomotives, it shall be placed where it will not create a hazard.

(4) Personnel shall not perform work on locomotive electrical equipment while wearing rings, metal wristwatches, other jewelry or other metal articles.

(5) Personnel shall not put face or hands near main generator, or any high voltage equipment while it is running.

(6) Do not open high voltage cabinet when generator is under load.

(7) Do not put hands near radiator shutters or any other equipment which engages automatically.

c. Pier Operations.

(1) A pier can be considered one long highway grade crossing. The crew shall be on the constant lookout for parked or moving vehicles, walking or standing personnel and areas on or near the track being used for purposes unrelated to the track operation.

(2) Due to the close clearances in many pier areas, the Installation Commander shall consider all pier operations in determining speed limits.

(3) Due to the type of material stored and moved on piers, special attention shall be paid to the method of securing cars for loading and unloading. Railcars shall not be coupled into without proper authorization.

(4) Train crews shall be prepared at all times for rapid evacuation of the pier during any emergency, for example, a fire.

(5) Spotting of explosen-laden cars on wharves and piers have unique requirements: stand-by locomotives, wheels chocked, and hand brakes set. See OP 5, Vol I, para. 12-6.3.4j.

d. Barricade Operations.

(1) No cars shall be moved in or out of a barricade without proper authorization.

(2) Train crews shall exercise extreme caution when moving railcars in or out of the barricade since clearances and sight distances are often restricted.

(3) Due to close clearances in barricaded areas, the Installation Commander shall consider all barricade operations in determining speed limits.

e. Mounting, Dismounting, Riding, and Climbing on Railway Cars and Locomotives

(1) Car and Locomotive Mounting and Dismounting. In railroad operations, the need to mount and dismount cars is critical to getting the job done. Accident records show that one out of every four accidents with railroad equipment occurs when people are mounting or dismounting railcars or locomotives. Follow these simple steps to avoid injuries.

- To mount moving equipment, face the equipment and place your trailing foot on the step first as you establish a firm grip with both hands. Then bring up the other foot for a solid stance. See Figure 3-2.

- A railcar or locomotive may be boarded at the front end or the trailing end. Mounting the trailing end lessens the possibility of a personal injury if the crew member slips.

- To dismount moving equipment, face the equipment and release your trailing foot first so as to avoid turning into the moving equipment as you are getting off. Do not release your hand until you have a firm footing. See Figure 3-3.

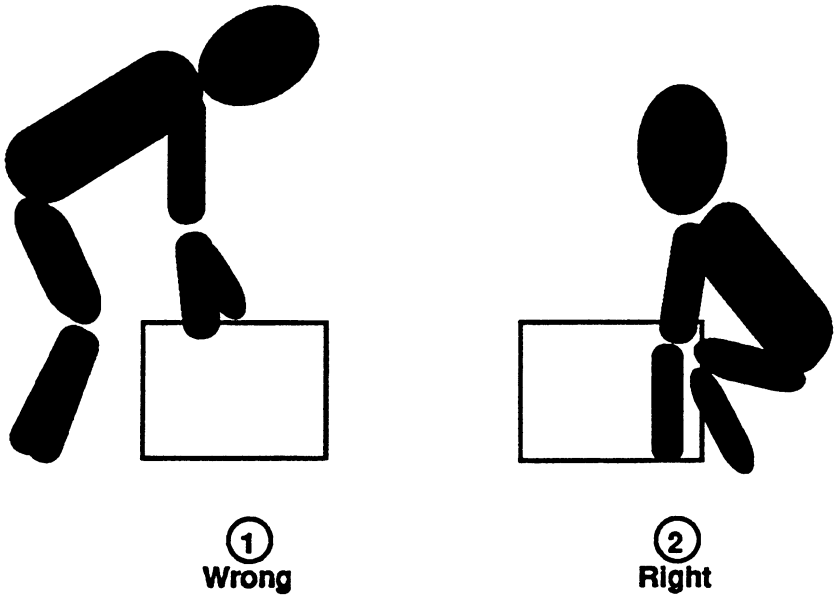

Figure 3-1. Lifting methods.

- When stepping from between engines or cars, watch for equipment in motion on adjacent track.

- Always look in the direction of movement and be alert for any objects or tight clearances that could injure you.

- Whether mounting or dismounting equipment, always ensure the speed is slow enough so that footing and balance will not be lost. This speed is no higher than 6 mph, which is jogging speed.New employees should first practice these

procedures on stationary equipment and then progress to speeds with which they are comfortable. When conditions warrant, signal to have the movement stopped.

(2) Car and Locomotive Riding. Only operating, management, or other personnel as authorized by the Installation Commander or Transportation Manager are permitted to ride railroad equipment. Observe the following when riding railcars or locomotives:

- Maintain a lookout for obstructions ahead that may endanger your safety.
- Always ride on the side ladder (if clearances permit) and face the direction of movement. Normally, crew members ride on the engineer's side to facilitate hand or lamp signals.
- Keep a firm grip and solid footing at all times. Be prepared for jolts in any direction at any time.
- Don't ride on or in open-top cars loaded with material that's likely to shift.
- Never ride or walk on the roof of a moving railcar or locomotive.
- Know your territory and be vigilant for close clearances.

(3) Railcar and Locomotive Climbing. Observe the following when climbing:

- Use the side ladders and not the end ladders when going up and down on a railcar. End ladders are used by crew members to set handbrakes or to avoid tight clearances.
- If necessary to climb between railcars, avoid putting hands or feet where they can get caught if the railcars should move unexpectedly. Never put foot on the coupler or the end sill. The coupler can move and cause serious injury. See Figure 3-4 for an example of an unsafe area between railcars.
- When climbing, never release the handhold until there is a firm grip with the other hand.
- Never jump from one car to another - either on the same or adjacent track.

Note: If necessary to mount or dismount a moving flatcar, use extreme caution, as these cars have no safety mechanisms for climbing on or off the cars.

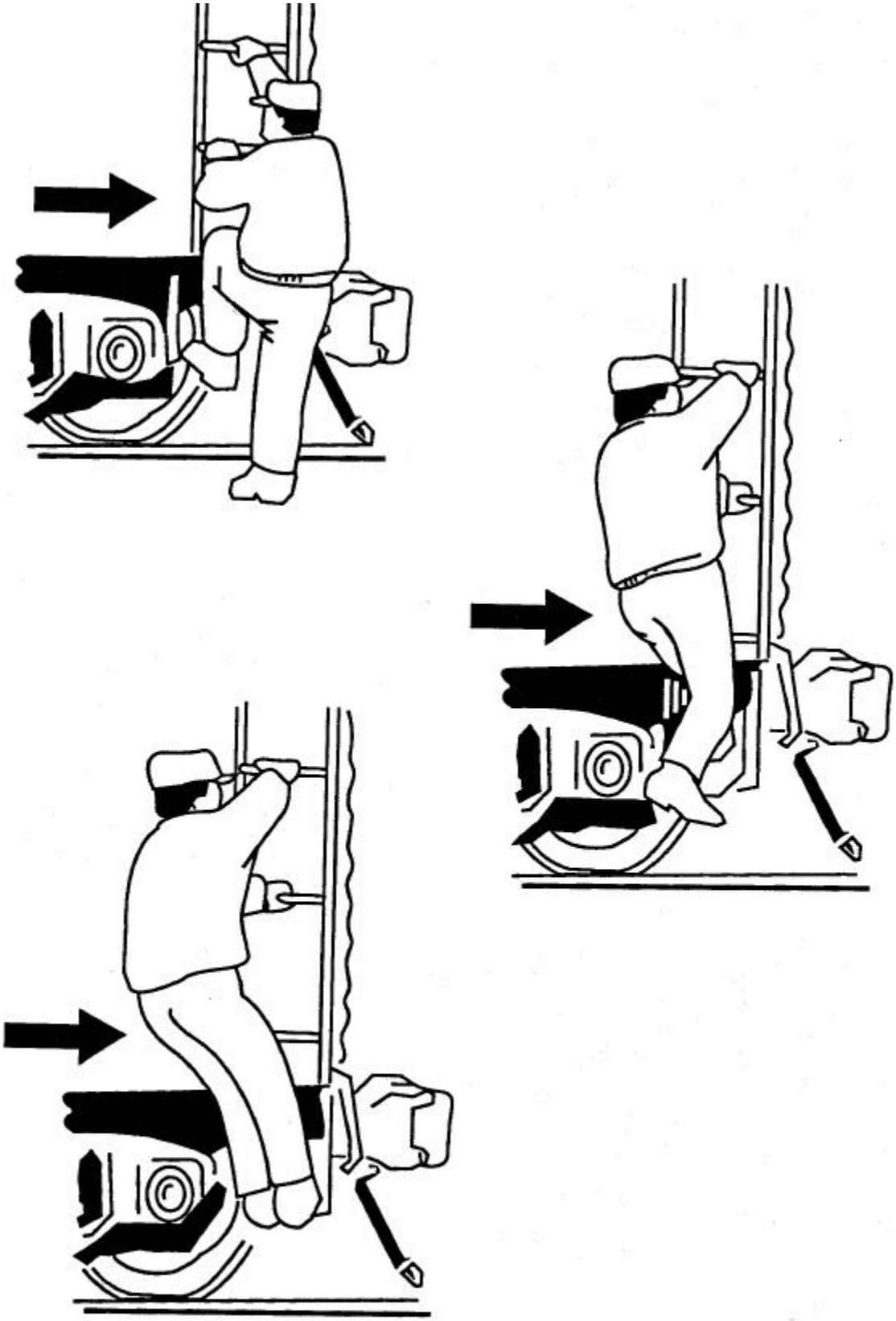

Figure 3-2. Mounting moving equipment.

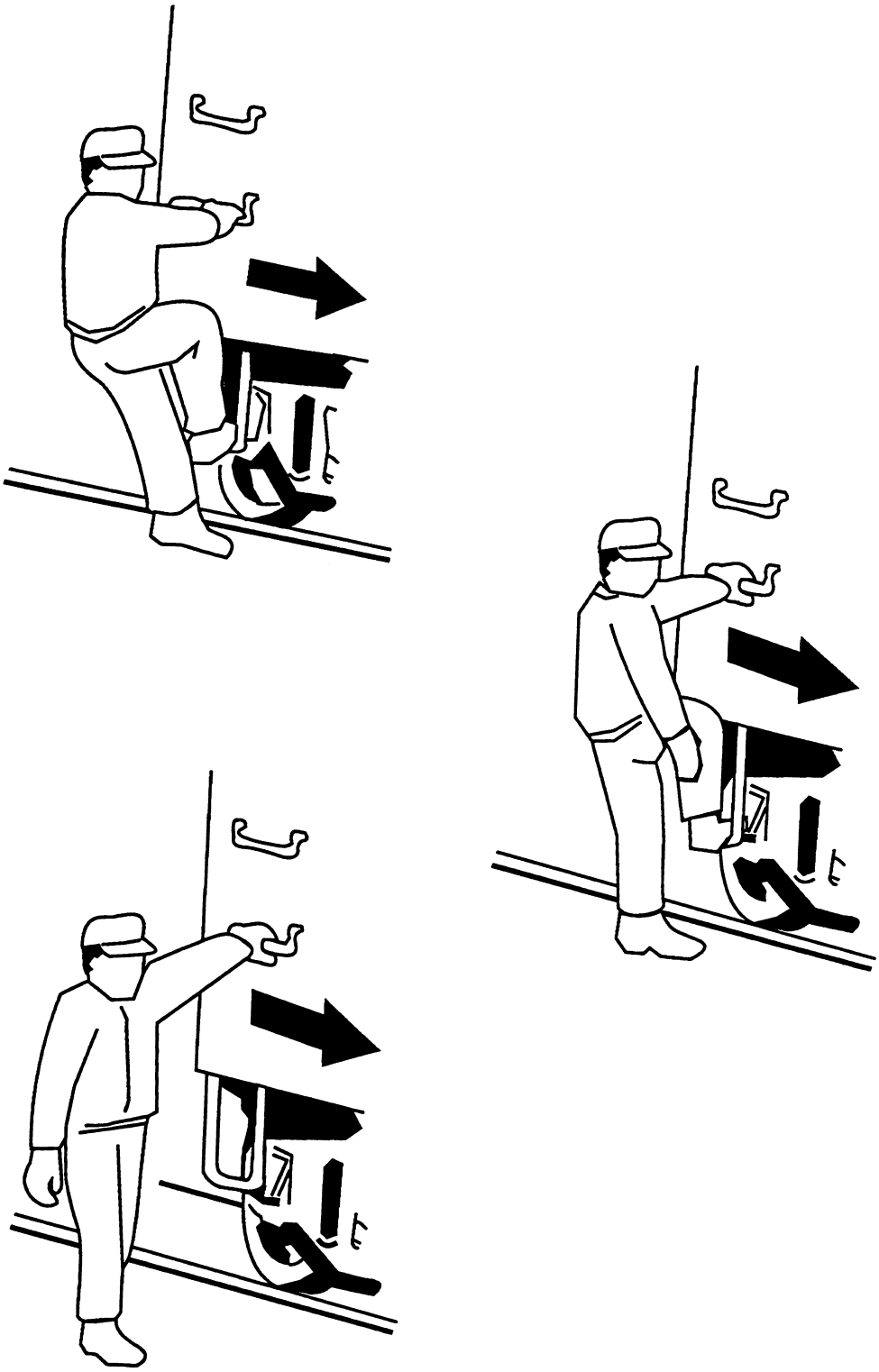

Figure 3-3. Dismounting moving equipment.

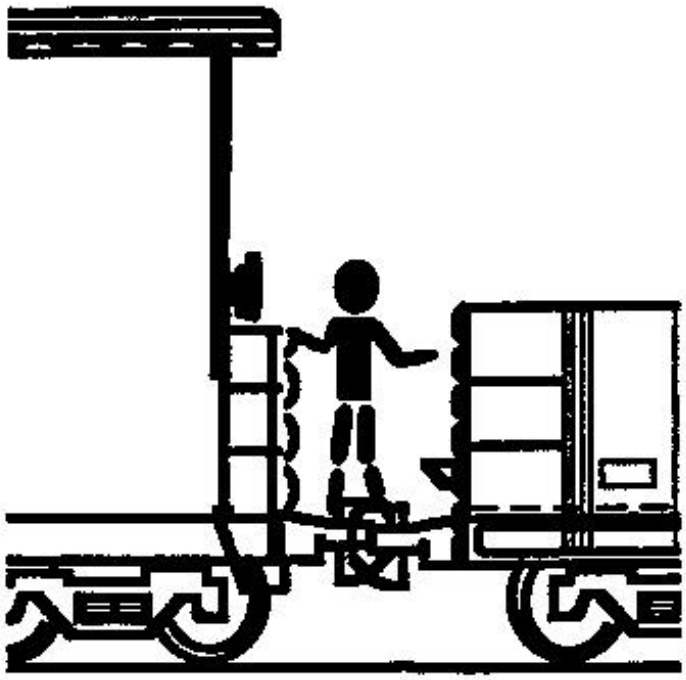

Figure 3-4. Unsafe areas between coupler head and draft gear.

f. Switching Operations. Switching operations include coupling, uncoupling, coupling air hoses, setting the hand brakes, releasing the hand brakes, chocking wheels, turnout procedures, and derailer procedures.

(1) Coupling and uncoupling procedures. Observe the following when coupling or uncoupling railcars:

- No person other than a crew member shall couple or uncouple cars.

- Before going between standing locomotives or railcars to couple or uncouple, ensure slack has adjusted and train has stopped. If railcars are on a grade, ensure they are secured (brakes set and wheels chocked).

- When coupling railcars, the railcar or locomotive approaching shall be brought to a full stop before reaching the railcar to be coupled. This distance between the railcar or locomotive and the railcar to be coupled shall be a minimum of three (3) feet and a maximum of five (5) feet.

- After the train has come to a full stop, open only one of the knuckles with the cut lever. Stand clear of the knuckle since it could fall to the ground if the knuckle pin is broken or missing. If it is necessary to adjust one of the drawbars, follow the above procedures for moving between railcars. A ground crew member shall signal the engineer to proceed at a slow speed to complete the coupling.

- After the coupling has been secured, couple the air hoses and charge the air brake system (see below).

- To uncouple, use cut lever. If cut lever is inoperative, stop the movement, cross over and use cut lever on the other railcar. Do not uncouple railcars on curves unless absolutely necessary since it may be difficult to couple to the railcar at some later time.

- Do not go between moving railcars or locomotives for any reason during coupling or uncoupling procedures.

- Do not give a signal to move a locomotive or railcar while an employee is between the locomotive or railcars.

- Do not cross in front of moving equipment after a signal has been given to move.

(2) Coupling Air Hoses. Observe the following when coupling air hoses:

- Establish a clear understanding of your intentions with the engineer.

- Make sure the train has stopped and slack has adjusted.

- Check angle cocks to ensure they are closed - the handle perpendicular to the brake pipe.

- When stepping between railcars to make the coupling, keep one foot outside the rail to maintain balance.

- Grasp both hoses firmly behind their couplings and join them securely.

- Slowly turn the angle cocks to the fully open position (parallel to the brake pipe). Keep all parts of the body out of range as the angle cocks are opened. Beware of live air hoses.

(3) Setting Hand Brakes. Observe the following when setting hand brakes:

- Do not set the hand brakes until equipment movement has ceased.

- When setting a hand brake, take a position appropriate for the brake type and ensure firm footing and handholds to prevent slips, falls, sprains, or strains If required to climb on railcar, keep one foot on the ladder and the other foot on the brake platform. Grasp the ladder or a handhold (grab iron) with one hand. With the other hand, apply steady pressure; do not jerk on the wheel or lever, especially when going from light to heavy pressure.

- Reach behind the wheel and not through the spokes. Throw the release lever to its on position.

- Rotate the brake wheel clockwise until slack is taken up. Turn the wheel until chain tension is sufficient.

- To prevent movement, ensure railcars are properly chocked.

(4) Releasing Hand Brakes. Observe the following procedures when releasing hand brakes:

- The hand brakes on a car or cut of cars shall not be released until a coupling has been successfully made, the air hoses have been coupled, and the brake systems have been fully charged.

- When in the correct stance and braced for any sudden movement of the hand brake wheel, throw the release lever into the off position. Many brakes are equipped with a quick release feature, which will be enough to release the brake. Other hand brakes require turning the wheel counterclockwise to gradually release them.

- Always keep hands and arms free of the wheel's spokes. Some models spin when released, and could cause injury.

- Most hand brakes require the use of only one hand to release. If a brake has been set too tight to be released with one hand, get some help.

(5) Chocking. Observe the following when chocking railcars and locomotives:

- Hand brakes and chocking go hand in hand: one shall not be substituted for the other.

- When a single railcar is spotted or parked, the hand brake shall be set and chocked on both sides of the same truck.

- When a cut of railcars is spotted or parked on a downgrade, the hand brakes on the lead car on the downgrade end shall be set. This car shall also be chocked on both sides of the same wheel.

- When a cut of cars is spotted or parked on a crest (double downgrade), the hand brakes on each end of the cut shall be set. The cars on each end of the cut shall be chocked.

- In addition to chocking the lead car on a downgrade, a sufficient number of cars shall also be chocked.

- Rail crews shall consider chocking additional cars to prevent movement. Railcars are improperly chocked if movement in either direction is possible.

(6) Procedures for Throwing a Switch (Turnout). The following basic rules for operation apply to all types.

(a) Observe the following:

- When a switch is to be made, a crew member shall ride the point in the direction of travel.
- The crew member on the point shall signal the engineer to stop 3 to 6 feet before reaching the turnout (switch).
- Before throwing any switch, ensure there are no impending movements over the switch and proper switch alignment is defined.
- Check the switch points for rocks, wood, or other foreign objects that may interfere with switch operation.
- Unlock the switch if necessary.
- Take a firm, steady stance with the body clear of all moving parts.
- Release the latch, if so equipped. Caution: a switch handle may be under tension and could fly when the latch is released.
- Bend the knees and grab the handle with both hands. Watch for close clearances and ensure fingers are not crushed under the handle.
- Lift with slow, even pressure, using the leg muscles. Use the same pressure to lower the handle into its keeper, if so equipped. Be careful not to strain or suddenly stop. Balance is important throughout. Double-check to see that the keeper is locked, if so equipped, and the switch points are properly aligned.
- When the switch has been thrown, a crew member shall signal the engineer to proceed through turnout.
- Relock the switch when through using it if required by the local operating directives.
- Crew members shall ensure that the turnout is properly aligned prior to reverse movement.
- For lever switches, pull rather than lift the lever.
- To throw a lever switch, trip its latch with one hand, get a firm grip and sure footing and pull the lever into position, using leg muscles to assist.
- Report a defective switch to the railroad dispatcher immediately.

(b) Observe the following special precautions when handling switches.

- Switches (other than spring and automatic switches) shall not be run through. If a switch is run through, it is unsafe and shall not be used until inspected and repaired by track maintenance personnel. If a locomotive or a car partially runs through a switch, the entire movement shall be continued.

- Switches shall be left aligned in accordance with local operating procedures.

- Switch targets will show green when lined for the normal route and red when lined for the side route. In most cases, the normal route is the route that keeps the train or locomotive on the main track.

- After aligning a main track switch for a train, the crew member attending the switch shall go to the opposite side of the main track, when necessary, and not return to the operating switch stand until the movement has been completed. When not practicable to go to the opposite side of the track, the crew member should stand at least 20 feet from the operating switch stand.

- The person handling the switch is responsible for its correct positioning.

- The engineer shall confirm that switches near the locomotive are properly lined and shall require the same attention from other crew members.

- Never foul another track with cars unless you have approval from the dispatcher.

(7) Derailer Procedures. The Installation Commander shall review the need to protect areas with derail devices and shall include procedures for their use in the local railroad operating directive. Installation Commanders shall also ensure derail devices are conspicuously marked.

- Derail devices shall normally be set in a derailing position.

- Crew members shall remain alert for derail devices to avoid unintentional derailment of railroad equipment.

- Railcars shall not be spotted where they will foul derail devices.

- Crew members shall leave derail devices in the open or closed position in accordance with local railroad operating directive.

2. Inspections During Operations.

a. Locomotive Inspection and Setup. Prior to accepting a locomotive for service, the engineer shall complete a daily operator inspection. This visual inspection shall include a walk around the locomotive, a check of on-board components and fluid levels, and check for leaks or other unusual conditions after locomotive engine startup. **(Specific engine start requirements such as opening test cocks on EMD engines and manually turning the engine to check for liquid in the cylinders may be required.)**

Before starting a work shift, the engineer shall ensure that the locomotive brakes are in safe and suitable condition for service. The devices for regulating all pressures shall be properly performing their functions, the brake valves shall work properly in all positions, and the water shall be drained from the airbrake system.

The components listed below shall be inspected for operational worthiness. Engineers shall use Form 1, **LOCOMOTIVE INSPECTION CHECKLIST**. See Appendix B for an example of a checklist that details the components to be checked. The Installation Commander may augment this form to meet local requirements. If deficiencies are discovered, complete Form 4, **LOCOMOTIVE EXCEPTION REPORT**. See Appendix B. The **LOCOMOTIVE INSPECTION CHECKLIST** and the **LOCOMOTIVE EXCEPTION REPORT** will be turned in to the railroad supervisor. The supervisor shall report these deficiencies/defects to maintenance. The Locomotive Inspection Checklist and the Locomotive Exception Report shall be retained at least 30 days.

Items 1 through 13 should be checked prior to engine start-up.

(1) Safety appliances, ladders, hand holds and fire extinguishers. During the walk-around inspection before the engineer mounts the locomotive, the safety appliances shall be checked to ensure that no unsafe conditions such as severely bent or missing hand holds, steps, etc., exist.

(2) Air brake hoses. Air hoses at each end of the locomotive shall be checked to ensure they are serviceable. Missing or damaged items shall be replaced prior to using the locomotive for service. See Figure 3-5 for examples of air hose defects and wear limits.

(3) Control hoses and (Multi-Unit) MU cables. For locomotives that will be used in MU service, the condition of the main reservoir equalizing hose, actuating hose, and brake cylinder equalizing hose on each end of the locomotive shall be checked. Missing or damaged hoses shall be replaced. For locomotives that will be used in MU service, the condition of the MU connections and cables shall be checked for any obvious defects.

(4) Locomotive engine oil level. After mounting the locomotive, but prior to locomotive engine start-up the engine oil level shall be checked and filled if necessary. If the engine is not equipped with a low oil shutdown system, this check is critical.

(5) Compressor oil level. The lubricating oil for the compressor shall be checked and filled if necessary.

(6) Governor oil level. The governor oil level shall be checked and filled if necessary.

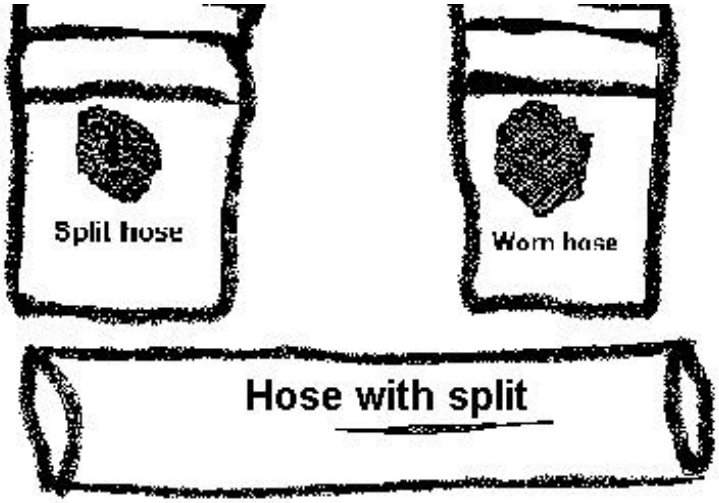

Figure 3-5. Examples of defective air hose.

(7) Engine coolant level. The engine coolant level shall be checked and filled if necessary.

(8) Hand Brake Tests. The engineer shall check the operation of the hand brake.

(9) Engine protective devices. If so equipped, the low water button, oil pressure reset button, and engine overspeed lever shall be checked. All inspection covers shall be checked for proper fit.

(10) Air and fuel oil cleaners and filters. Air and fuel oil cleaners and filters shall be visually checked for contamination.

(11) Couplers and knuckles. The couplers at each end of the locomotive shall be checked for any visible flaws, and the presence of knuckles and knuckle pins shall be confirmed.

(12) Wheels, sanders, brake rigging, and other truck components. The wheels shall be visually checked for any obvious defects such as missing metal, large flat spots, thin or high flanges, or plate discoloration. See Figures 3-6 to 3-7 for examples of wheel defects. The sanders shall be checked to see that they are properly aimed and not damaged. The brake rigging shall be checked for integrity and the shoes checked for adequate wear remaining. The rest of the truck shall be checked for any obvious defects such as missing springs, cracked frame, or loose or dragging components.

(13) Fuel oil tank. Check the fuel oil level and check the fuel oil tank for leaks.

Built-up Tread

Thermal Cracks

Shelled Tread

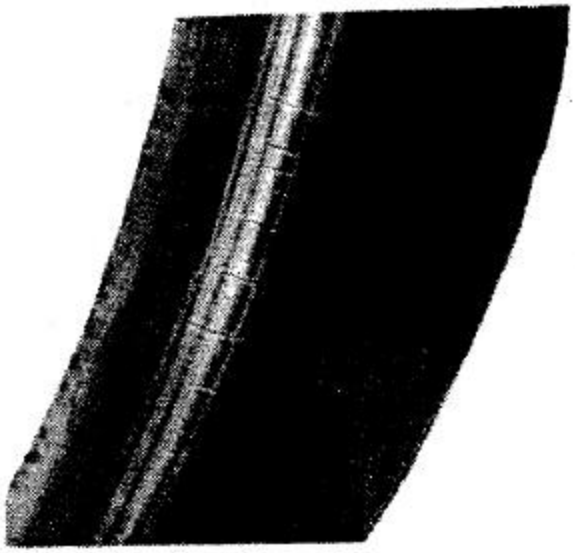

Flange Cracks

Figure 3-6. Examples of defective wheels.

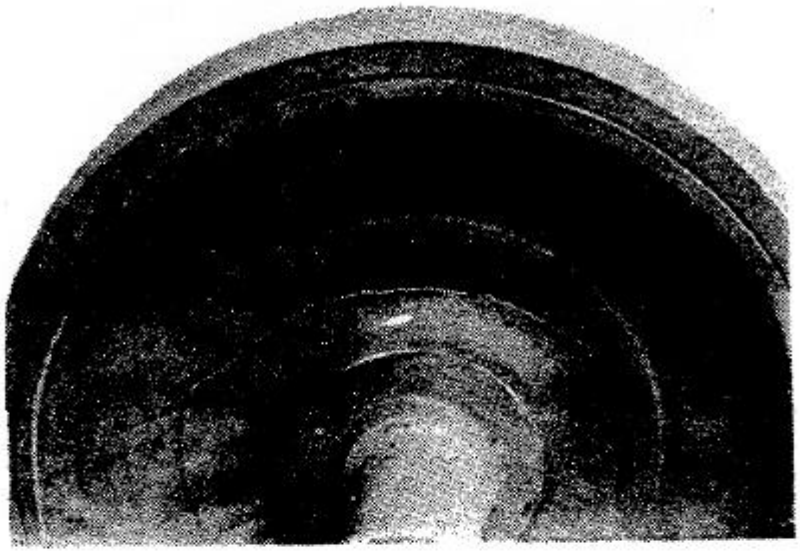

Cracked or Broken Plate

Hole in Plate

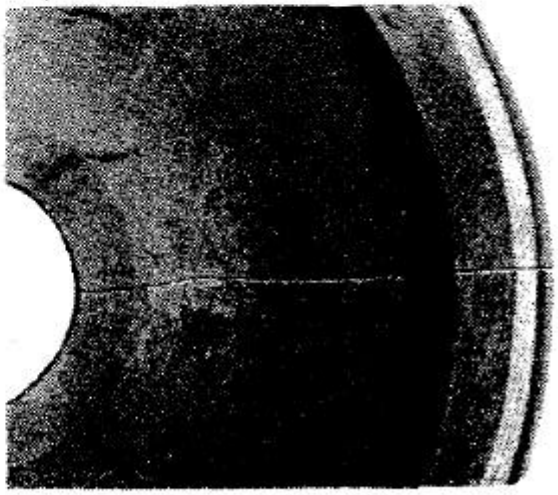

Cracked Plate

Figure 3-7. Examples of defective wheels.

(14) Sand box level. The sandbox sand level shall be checked to ensure an adequate supply is available.

(15) Switch settings. Check the main battery and ground relay switches to ensure they are closed. Check the control, local control, and fuel pump circuit breakers to ensure they are turned on. The generator field switch shall be off until locomotive movement is required. All fuses shall be checked for proper installation.

(16) Headlights. The headlights on both ends of the locomotive shall be checked for operation--dim and bright. If two or more locomotives are MU'd, the proper lead unit setting shall be confirmed.

Note: Items 17 through 20 shall be checked after main reservoir pressure is at operating levels.

(17) Locomotive Brakes. The engineer shall also complete the locomotive brake setup and tests per Sections 3.4.a. and 3.4.b.

(18) Horn. The horn shall be audibly checked for adequate sound production. For reference, the horn should produce a minimum sound level of 96-db (A) at a point 100 feet forward of the locomotive in its direction of travel.

(19) Bell. The bell shall be checked for proper operation.

(20) Window wipers. The window wipers shall be checked for proper operation and good glass contact.

(21) Miscellaneous water, air and oil leaks. During operation the locomotive shall be periodically checked for any unusual water, lubricating or fuel oil, or air leaks.

(22) Cab and engine compartment cleanliness. All trash and unnecessary items shall be removed from the cab and engine compartment. The windows shall be checked for clear visibility.

(23) Radio check. A radio check shall be conducted to ensure its serviceability.

(24) Speed indicator and speed/event recorder. Operation shall be confirmed as soon as possible after movement of the locomotive.

b. Railcar and Consist Inspection. Whenever a railcar is picked up it shall be inspected for properly working safety appliances and mechanical integrity. The crew shall inspect the following items on the car to ensure it is safe to move. Deficiencies in these item are readily discoverable by a train crew in the course of a customary inspection. If deficiencies are discovered, complete Form 6, **RAILRCAR DEFICIENCY REPORT** (Appendix B) and turn form into supervisor. This form shall be maintained for at least 30 days. The Installation Commander shall incorporate these items and procedures for conducting these inspections into the local railroad operating directive:

(1) Car Body. Look for the following: leaning or listing to side, sagging downward, positioned improperly on truck, object dragging below, object extending from side, door insecurely attached, broken or missing safety appliance, lading leaking from a placarded hazardous material car.

(2) Couplers and Knuckles. Couplers and knuckles shall be checked for cracks and it shall be confirmed that a pin is in place to hold the knuckle when it is opened.

(3) Overheated wheel or journal (hot box). Hot friction journal bearings can usually be identified during the day by smoke as they heat up. At night they may not be discovered until they catch on fire. Crews shall observe their train at every opportunity (curves are especially useful for this purpose) and stop the train immediately if a hot journal is suspected. If the journal is on fire, it should be extinguished quickly to avoid the possibility of a car catching fire.

Hot roller bearing journals are more difficult to detect. After extended operation, the heat may be felt as one walks by them and they can be felt to determine if their temperature is abnormally high. Also, as a roller bearing heats up it will start to drip hot oil. Look for discoloration and lubricant leakage.

(4) Broken or extensively cracked wheel. See Figures 3-6 and 3-7 for examples.

(5) Brakes that fail to release.

(6) Any other apparent safety hazard likely to cause an accident or incident before the train arrives at its destination.

(7) Air brake hoses. Air brake hoses shall be checked for damage prior to use and the presence of a gasket shall be confirmed. Look for date of hose manufacture and report if shelf life has been exceeded. Refer to Figure 3-5.

(8) Brake beams, shoes, and linkages. The mechanical components of the brake system shall be checked to see that all linkages are connected securely and that rods are not rubbing or binding on any car parts. The brake shoes shall be checked for an adequate wear surface for safe operation.

(9) Hand brakes. Hand brakes shall be checked for proper operation.

(10) Safety Appliances(ladder, hand holds, and fire extinquishers). All the safety appliances on the car shall be checked to see that they are safe and do not present a hazard to anyone using them during switching operations. See Figure 3-8 for examples of railcar safety appliance defects.

(12) Axles, and other truck components. Axles shall be checked to see that no rods or chains are rubbing against them. The rest of the truck shall be scanned for any obvious defects such as missing springs, cracked frame, or loose or dragging components.

(13) Load Condition. The method and condition of securing loads shall be checked for flatcars. For other type of railcars, inspect for leaning bodies. Where possible, inspect for security of the loads.

c. Initial Terminal Air Test. Anytime a locomotive is coupled into a railcar or cut of cars, an initial terminal air test shall be conducted. The procedure is outlined in Section 3.4.c.

Any car whose brakes do not apply or release shall be placed on the end of the cut of cars opposite the locomotive. Complete Form 6 in Attachment B and turn form into maintenance.

d. Intermediate Train Air Test. Anytime a railcar or new cut of cars is added to or removed from a railcar or an existing cut of cars, an intermediate test (set and release) shall be conducted. This test is conducted to ensure that the integrity of the brake line and that the train's brakes have not been compromised by the added car(s). See Section 3.4.d. for details.

e. Other Inspections. At every opportunity, crew members should scan their trains for possible defects of the running gear, brake rigging, and draft rigging, giving special attention to hot journals, sticking brakes, and sliding wheels. If a defect is discovered while the train is moving, the engineer shall be signaled to stop. If the defect cannot be remedied by the crew member, the railroad dispatcher shall be notified.

Employees shall observe passing trains for defects; if conditions indicate a danger to the train, they should take all practical measures for its protection.

f. Track and Structures Inspection. Track maintenance personnel are charged with inspecting and maintaining safe track. However, every member of a train crew shall be able to identify basic track defects since any defect could represent a potential derailment site. Figure 3-9 gives several examples of defective ties that shall be reported by train crews if observed. Figure 3-10 gives several examples of the various types of broken or damaged rails that may be encountered and shall be reported. These deficiencies shall be reported in accordance with the local railroad operating directive If any crew member finds any track defects or conditions that may cause an accident, they shall report the condition immediately to the railroad dispatcher. If the defect presents a risk to safe train operation, the crew shall wait for the defect to be inspected by qualified personnel before proceeding. Defects that would be in this category include broken rail, broken joint bars, and switch points out of adjustment.

Some of the items that crews shall maintain a lookout for are listed below. Crews shall immediately report failures resulting from the below items to the dispatcher:

Broken rails, tie plates, joint bars, frogs, and switch points. Most of these items are more easily observed by crew members on the ground although engineers may also be able to "feel" such things as a broken frog.

- Broken and/or rotted ties, plate cut, etc. Two or more broken or rotted ties in a row is a concern, and operation over the affected track is questionable.

- Wide gauge symptoms. If only a small portion of the rail on one or both sides of the track is shiny, there is a strong possibility of wide gauge. This condition, if left uncorrected, will eventually lead to a wheel drop derailment.

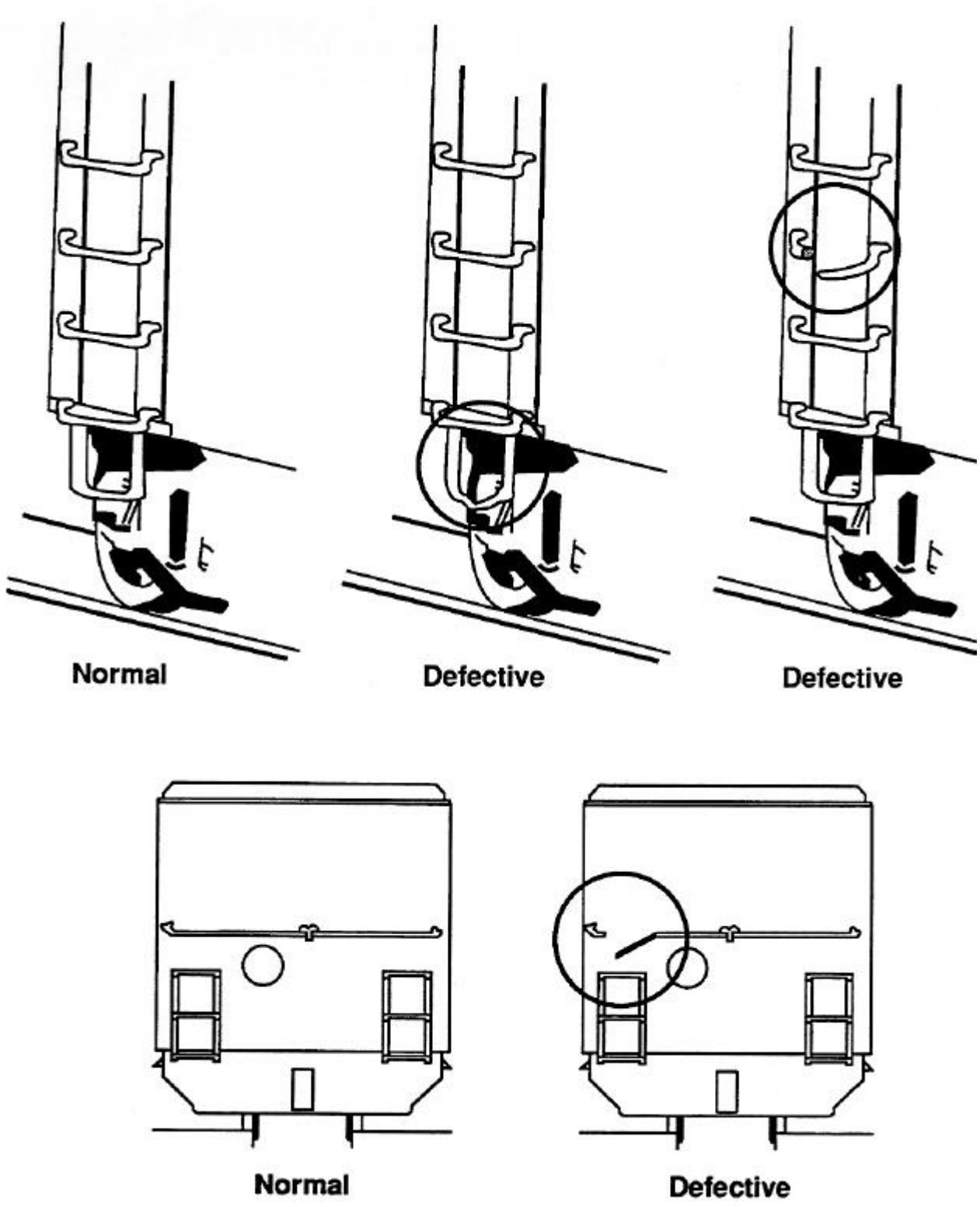

Figure 3-8. Hazardous safety appliances.

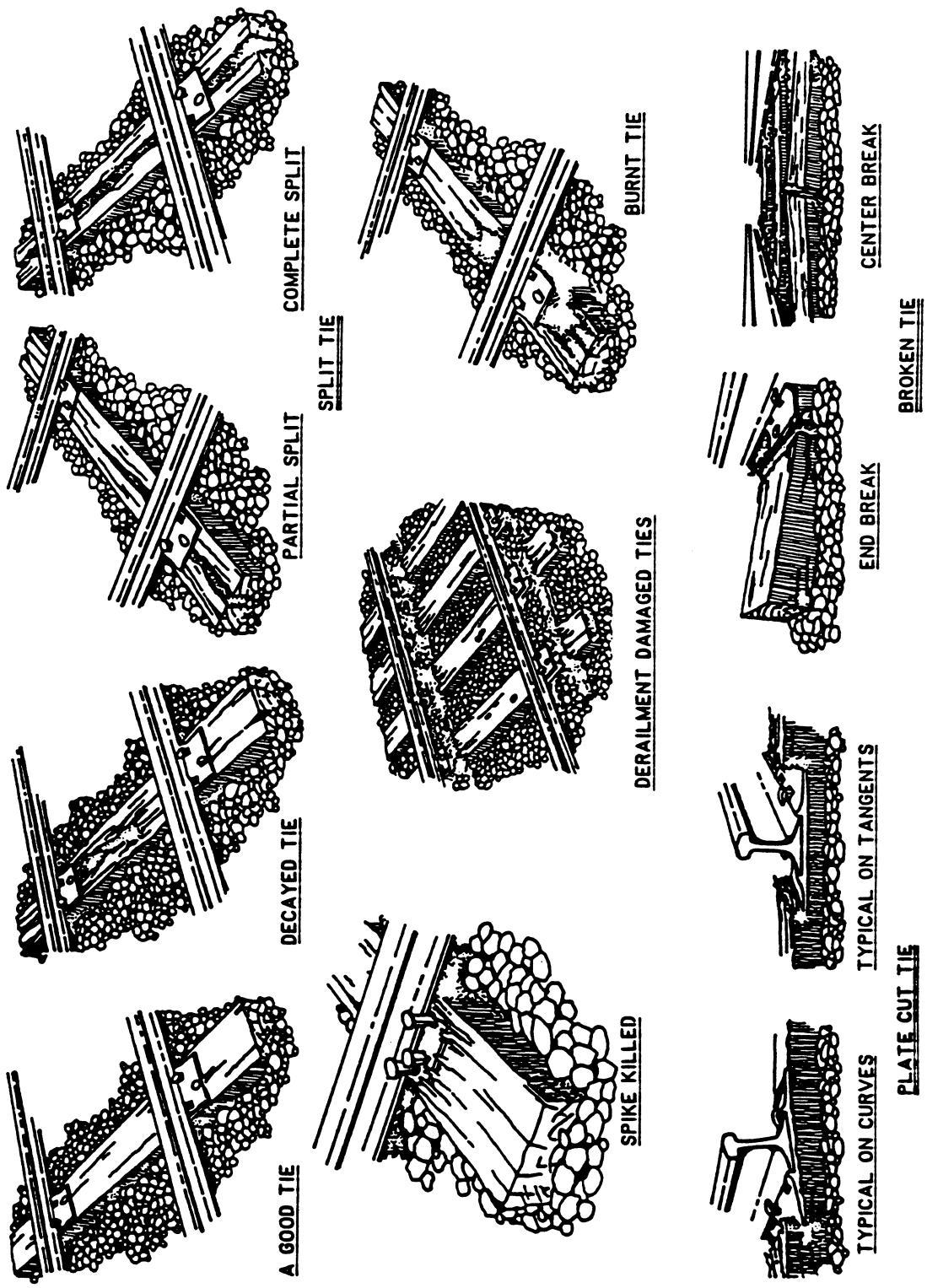

Figure 3-9. Examples of defective ties.

A Transverse Fissure | B Compound Fissure | C Horizontal Split Head | D Vertical Split Head

Transverse Fissure— A crosswise break starting from a center or nucleus inside the head of the rail from which it spreads outward. The broken rail will show either a bright or dark round or oval smooth area around the nucleus. See A.

Compound Fissure— A horizontal split head which, in spreading, turns up or down in the head of the rail. See B.

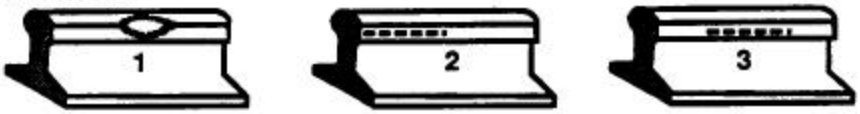

Horizontal Split Head— A horizontal break beginning inside the head of the rail and spreading outward, usually indicated on the side of the head by a lengthwise seam or crack, or by the flow of metal. See C and diagrams 1, 2 and 3.

Vertical Split Head— A vertical split through or near the middle of the head, and extending into or through it. A crack or rust streak may show under the head close to the web or pieces may be split off the side of the head. See D and diagrams 4, 5, 6 and 7.

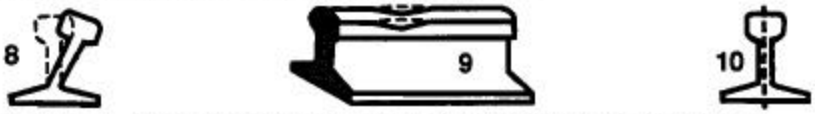

Crushed Head—A flattening or crushing down of the head. See diagrams 8 and 9.

Piped rail—One with vertical split, usually in web, due to failure of the shrinkage cavity in the ingot to unite in rolling. See diagram 10.

Split Web—A lengthwise crack along the side of the web and extending into or through it. See diagrams 11 and 12.

Broken Base—Any break in the base of a rail. See diagrams 13 and 14.

Square or Angular Break—
and in which none of the defects listed above can be seen. See diagrams 15 and 16.

Damaged Rail— Any rail broken or injured by wrecks, broken, flat, or unbalanced wheels, slipping or similar causes.

Fiqure 3-10. Examples of broken or damaged rails.

- Train crews shall report any track locations that appear to create excessive forces (bang or bounce the locomotive and railcars around). Sections of track that set up harmonic rock and roll conditions shall be reported. Excessive rock and roll can lead to wheel lift and possible derailment. Figure 3-11 shows the rocking motion that can lead to a wheel lift derailment.

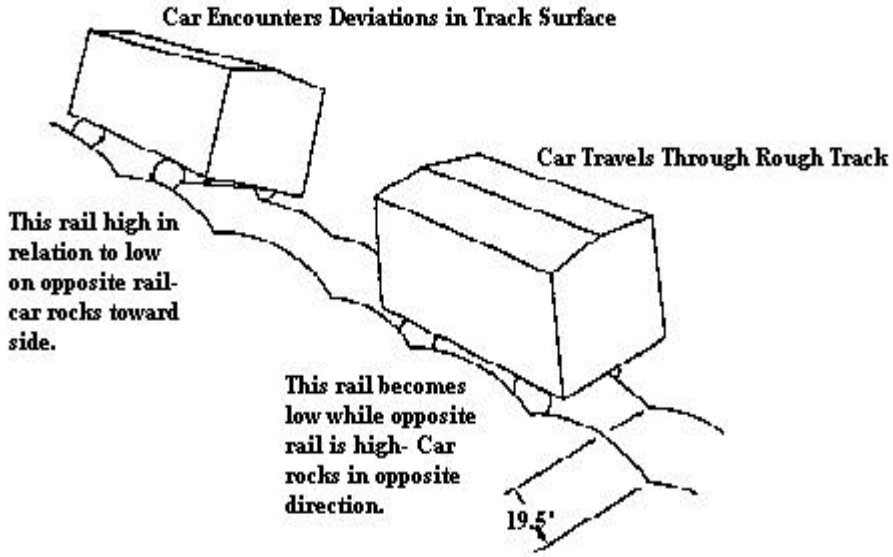

Figure 3-11. Railcar harmonic rock and roll.

- Washouts and flooding. Anytime there is water over the track or heavy rains have occurred since the last train operation, there is a potential for a washout. Track underwater (water contacting the base of the rail) shall not be traversed before being inspected by track maintenance personnel.

- Loose or missing bolts at rail joints, uplifting or missing spikes, suspended or swinging joints (joints which are not supported by at least one tie), and low joints.

- Proper fit of switch points to the stock rail and correct tension.

- Worn switch point protectors.

3. General Operations.

a. Train Operational Methods.

(1) Yard Limit Rules. The Installation Commander may designate yards in their local railroad operating directive. Examples are classification yards, commercial-government interchange yards (bullpen), and holding yards. The following yard rules shall apply to all trains operating within a rail yard.

- Yard shall be marked, for example, upon entering the yard, a sign stating "yard rules apply" and upon exiting, a sign stating "main line rules apply."

- While operating within yard limits, trains or locomotives shall not exceed a speed which will enable the train or locomotive to stop short of another train or locomotive, obstruction, or switch not properly lined. Trains or locomotives operating within yards shall not exceed 10 MPH or a lesser speed as designated by the local railroad operating directive.

(2) Main Track Rules. Main track shall only exist where access is controlled by means of a railroad dispatcher.

Operations shall follow the guidelines of only one train in each absolute block. The railroad dispatcher shall not allow any train or locomotive to occupy a block previously occupied by another train or locomotive until the dispatcher has positive confirmation from the conductor or engineer that the original train or locomotive is no longer in the block.

Trains shall only be allowed to enter the same block if controlled by train order rules or positive signal protection or both. Flagging protection is necessary.

b. Train Crew Notices. Train crew notices are necessary to provide a means of alerting crews to local situations that arise which are not covered by other directives. They describe situations that may be present for any period of time. Examples of these situations include: out of service track, slow orders, wash outs, track under repair, and inactive track These situations often present hazards that crews need to be aware of to operate safely. Notices shall be kept up-to-date and reviewed daily. They shall be issued on an as-needed basis. See Section 8.4 for further discussion.

c. Notification of Emergency Vehicle Movement. Emergency vehicles include fire trucks, ambulances, and security vehicles. Installation Commanders shall ensure that their local railroad operating directive includes a requirement for the notification of the railroad when an emergency vehicle is in transit to an emergency site. The reason for this requjrement is to facilitate the safe and rapid movement of emergency equipment without having to deal with trains blocking roadways.

d. Track Out-of-Service Procedures. Track needs to be taken out of service for a variety of reasons, ranging from planned maintenance to unsafe conditions to abandonment. Clear records shall be kept on such actions so that track that is out of service is not used. These records shall be part of the train crew notices book. See Section 3.3.b.

e. Signals. Any object waved by any person on or near the track is a signal to stop. When not involved in giving hand signals, personnel shall avoid making motions which may be construed as a hand signal. See Figure 3-12 for the approved hand signals and their meanings.

Crews shall be equipped with the proper equipment to safely pass signals. These items include brightly colored gloves, mitts, or boards for daytime use and lanterns or flashlights for nighttime use.

Radio and other means of voice communication may be used instead of hand signals to convey information when the use of hand signals is not possible. Crew members shall understand exactly which moves will be made while radio is being used to control the movement of a train.

(1) Locomotive bell. Except where the momentary stop and start is a continuous switching movement, the locomotive bell shall be rung when the locomotive is about to be moved, while passing through tunnels, and while approaching crossings at grade. Ringing shall begin sufficiently in advance of entering crossing to provide warning. If distance permits, warning shall be given not less than one-fourth mile before reaching crossing and continue until the crossing is occupied. Ring bell in all congested areas where vehicular or pedestrian movement is present. Ring bell elsewhere when necessary as a warning signal.

(2) Locomotive horn (whistle). The horn shall be used in conjunction with the bell when approaching grade crossings as outlined in Section 3.3.e.(6). The horn shall be used whenever the train or locomotive is approaching a track maintenance gang, track or car inspector, or other personnel on the right-of-way. The horn shall also be used to alert any trespasser(s) to the danger of the approaching train or locomotive. See Figure 3-13.

(3) Whistle Boards. The Installation Commander shall direct a person knowledgeable in railroad operations to conduct an annual review (in January) of the installation's railroad track system to determine where whistle boards shall be placed. The purpose of this review is to determine the high risk areas where it is prudent to remind engineers to sound the horn to warn others of an approaching train.

Typical high risk areas are heavily traveled shopping, office, and industrial areas; schools; day care centers; blind spots; etc. The review shall also address the cost of installation and maintenance of whistle boards; however, safety shall not be sacrificed for cost savings. A current letter, signed and dated, stating that the annual review was conducted shall be on file.

The reviewer's recommendations for whistle board location shall also be filed with this letter. Whistle boards shall be installed within six months from the date of the review. Figures 3.14a and 3.14b provide details for whistle board fabrication and placement. Existing whistle boards may be used until they need to be replaced.

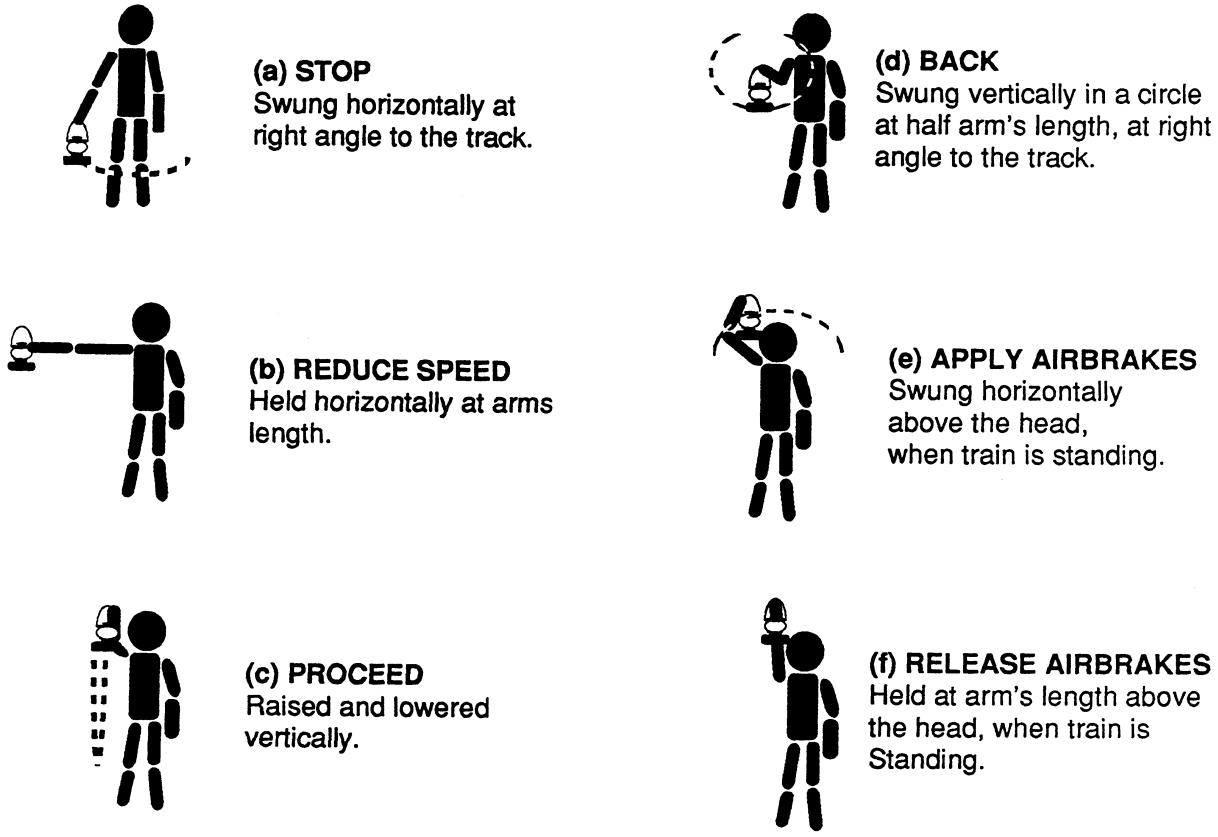

Figure 3-12. Hand and flag signals.

(4) Headlight. The headlight shall be displayed bright by day and night on the front of every train. It shall be extinguished when a train has stopped clear of the main track to meet a train, is standing to meet a train at the end of multiple main tracks, or is at a junction. When switching, locomotives shall display the headlight both front and rear; however, the light does not have to be on if light is reflected back to the engineer. When switching, locomotives shall dim headlights when working on tracks adjacent to the main line while a train is approaching

from either direction on the main line. Engineers shall also dim lights when approaching motor vehicles operating along parallel roadways.

(5) End of Train Markers. The lead car in the direction of travel shall be properly protected by the train crew. For all train movements made between sunset and sunrise or during low-visibility conditions such as rain, snow or fog, a battery-powered flashing light should be placed on the lead or trailing coupler of the last car. Short yard switching type movements do not require the use of the end of train light.

(6) Highway Crossings (Grade crossing). For crossings with approach activated lights and gates, the crew shall confirm that the lights are flashing and the gates are down before proceeding across the crossing. For crossings with approach activated lights only, the crew shall confirm that the lights are flashing (and have done so for at least 20 seconds) before proceeding across the crossing. Horn and bell procedures shall be followed. Sound the horn 20 seconds before the train will occupy the crossing, which translates to the following distances for the following speeds:

5 MPH…….150 feet	20 MPH……..600 feet
10 MPH…….300 feet	25 MPH……..750 feet
15 MPH…….450 feet	30 MPH……..900 feet

Any lights that are observed as not flashing shall be reported immediately to the railroad dispatcher.

When a train in a switching movement has been delayed or has stopped within 200 feet of a public crossing protected by automatic crossing signals, the crossing shall not be occupied by either a forward or reverse movement unless crossing signals have been operating for 20 seconds to provide warning.

For crossings without signals, flagging is the best means of alerting motorists and pedestrians. The Installation Commander will designate crossings which must be flagged and shall be included in the local railroad operating directive. When flagging is not used, horn and bell procedures shall be followed.

When cars are shoved in a switching movement over a highway crossing, a member of the crew shall flag the crossing per Section 3.3.f.

When visibility is restricted at a highway crossing by cars on an adjacent track, the crossing shall be flagged per Section 3.3.f.

(7) Blue Signals (Flags and Lights). Blue signals are important in maintaining a safe railroad operation. Blue signals indicate that someone is working in, on, under, between or around the equipment and no movement of that equipment shall be made. Violation of the blue signal rule can put one or more workers at risk of death or serious injury.

ENGINE WHISTLE SIGNALS

●	**Apply brakes. Stop.**
▬ ▬	**Release brakes. Proceed.**
● ●	**Answer to any signal not otherwise provided for.**
● ● ●	**Backing from a starting position.**
● ● ● ●	**Call for signals.**
● ● ● ▬	**Protect front of train.**
▬ ● ● ●	**Protect rear of train.**
▬ ▬ ● ▬	**Approaching public crossing at grade. To be prolonged or repeated until crossing is reached.**
▬ ▬ ▬ ▬	**Call in trainmen from South or West.**
▬ ▬ ▬ ▬ ▬	**Call in trainmen from the North and East.**
● ● ● ● ● ● ●	**Alarm for persons or livestock on the track (short series of sounds).**

KEY: ● --SHORT ▬ --LONG

FIGURE 3-13. ENGINE WHISTLE SIGNALS.

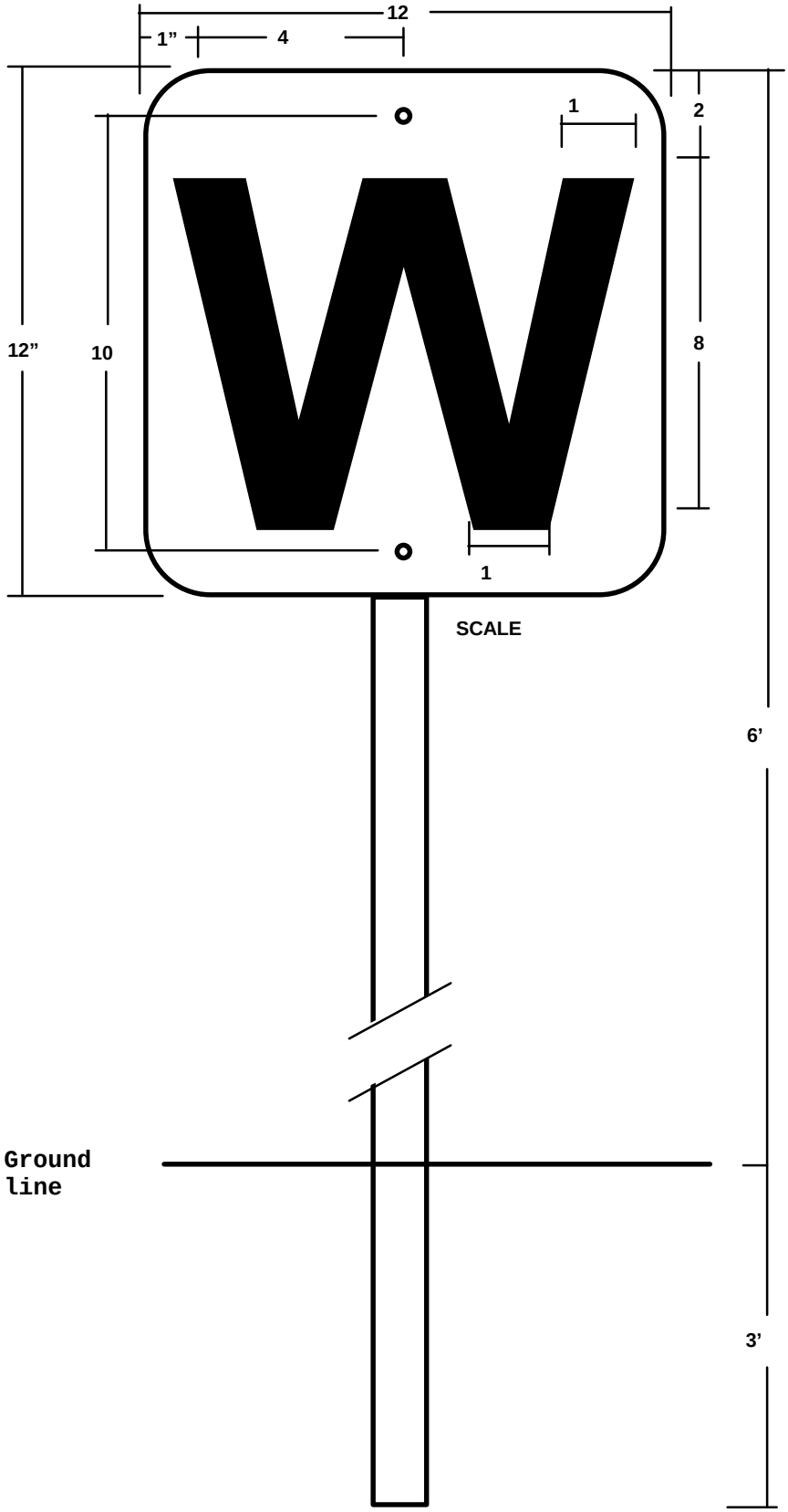

Figure 3-14A. Whistle board shape and dimension

Whistle Board Specifications

WHISTLE BOARDS: .080 aluminum.

BOLT HOLES: 3/8 inches in diameter.

FACING: White engineer grade reflective sheeting.

LETTERS: Black in a Helvetica letterstyle.

POST: Standard galvanized steel U-channel sign post or concrete.

PLACEMENT: Engineers' side of the track which is generally the right side facing the direction of travel.

Right angles to the direction of the track and at the eye level of the engineer, sitting in the locomotive cab.

At least 10 feet from the center line of the track, outside of the ballast, and seen easily by the engineer. However, the whistle board shall not present an obstruction to crew members or cargo on the train. Placement should be varied in situations where variation will aid train engineers.

Figure 3-14B. Whistle board specifications.

The following shall be observed:

- Blue signals shall be placed at both ends of the rolling stock, if both ends of the track are open, or at the open end of rolling stock if only one end of the track is open.

- The supervisor or the supervisor's designated representative in charge of the personnel who are working in, on, under, between or around the cars shall be responsible for placing and removing the blue signals. No person other than the supervisor who placed the blue signal or the supervisor's designated representative shall remove the blue signal.

- The equipment shall not be coupled into or moved while the blue signals are displayed.

- When a blue signal is displayed at the entrance to a track, rolling stock shall not enter that track. Cars shall not be spotted any closer than 50 feet from any obstruction (truck, trailer, other equipment) that is fouling the tracks.

- Except for servicing tracks or repairing tracks, or when a derail is used to divide a track into separate working areas, other rolling stock shall not be placed on the same track where it will obstruct the view of the blue signals.

- When personnel are in, on, under, between, or around a locomotive or rolling equipment coupled to a locomotive on either a main track or other than a main track, a blue signal shall be attached to the controlling unit at a location where it is readily visible to the engineer or operator at the controls of that engine.

- When emergency repair work is to be done in, on, under, between, or around a locomotive or rolling equipment coupled to a locomotive, and a blue signal is not available, the engineer or operator at the controls of the locomotive shall be notified and a clear understanding reached between the engineer or operator and personnel doing the repairs.

(8) Red Flags. Out of service track and track under repair shall be locked out or marked with a red flag on each open end of the track.

f. Flagging Protection. The Installation Commander shall designate highway grade crossings that require flagging protection. At these crossings, the train crew shall stop the train before the locomotive or lead railcar enters the crossing. A ground crew member shall stop traffic. This crew member shall wear a safety vest and use a red flag during the day and a lantern during the night. When stopping traffic crew members shall not get in front of moving traffic and shall wave the train ahead only after all traffic has been fully stopped.

g. Switching and Spotting Cars.

(1) Coupling and uncoupling. Refer to Section 3.1.f.1& 2. Any movement of a loaded car other than switching within a yard shall be done with the air brake system charged and functional. When switching in a yard, empty cars may be moved without connecting the air hoses

if there is sufficient locomotive braking power to safely stop the train. In yard switching, if significant grades are present or for any reason there is the risk of a runaway car, air brakes shall be charged on all cars. If it becomes necessary to move a car with brakes that do not function, follow the local railroad operating directive. In no case will "hot work" be performed on placarded railcars. Before a car is moved after having previously been spotted, all wheels should be checked for the presence of wheel chocks and the hand brakes released at the appropriate time.

(2) Wheel chocks. Wheel chocks are used to restrain cars from movement when they are spotted for loading, unloading, or other storage purposes. They are designed to prevent wheel movement after the air brakes bleed off or after the hand brake is released. Wheel chocks shall be painted a bright color and repainted if visibility diminishes. Some wheel chocks are attached to targets that help to ensure visibility. Wheel chocks and hand brakes work together; one shall not be substituted for the other. The Installation Commander shall address the use of chocks in their local railroad operating directive.

(3) Derail devices. Derail devices are used to protect certain tracks from intrusion by other rail equipment. They are often placed on track that contains grades leading from main line type track. If in place they will derail a car or cars before the car(s) can foul the track being protected. Derails shall be painted a bright color and repainted if visibility diminishes Figure 3-15 shows several types of derails and derail signs. The Installation Commander shall address the use of derail devices in their local railroad operating directive.

(4) Use of roll bys. A roll by is a car allowed to roll free of a locomotive controlled by someone riding the car and operating the hand brake. Rolls by shall not be used except where a written waiver has been granted by the Installation Commander and shall only be employed when no other way of executing the switching maneuver is possible. A waiver shall only be granted for specific locations. The waiver request shall include the specific location and the reason why a roll by is required. The Installation Commander shall not grant the waiver until a thorough review has been conducted.

(5) Flying switching. A flying switch is a movement in which the locomotive is uncoupled from a car, speeds up, and moves through a switch in time for the switch to be thrown in the opposite direction for the moving car. Flying switches are extremely dangerous and shall not be used.

(6) Setting of hand brakes. Hand brakes shall be set according to Section 3.l.f.3. An adequate number shall be set to hold the cut of cars being spotted (at least one hand brake in five cars).

(7) Air brakes. If air is being used, a service reduction to reduce brake pipe pressure to 30 psi shall be made (after the hand brake(s) is set), on the car or cut of cars to be spotted. The angle cock on the last car remaining with the locomotive shall be closed in preparation of the pull away signal only after exhaust from the brake valve on the locomotive ceases, otherwise the brakes on the car(s) being spotted may not be adequately set.

(8) Spotting locations. Cars shall not be spotted in such a manner as to foul switches, crossovers, or turnouts. Railcars shall not be spotted within 40 feet of a grade crossing.

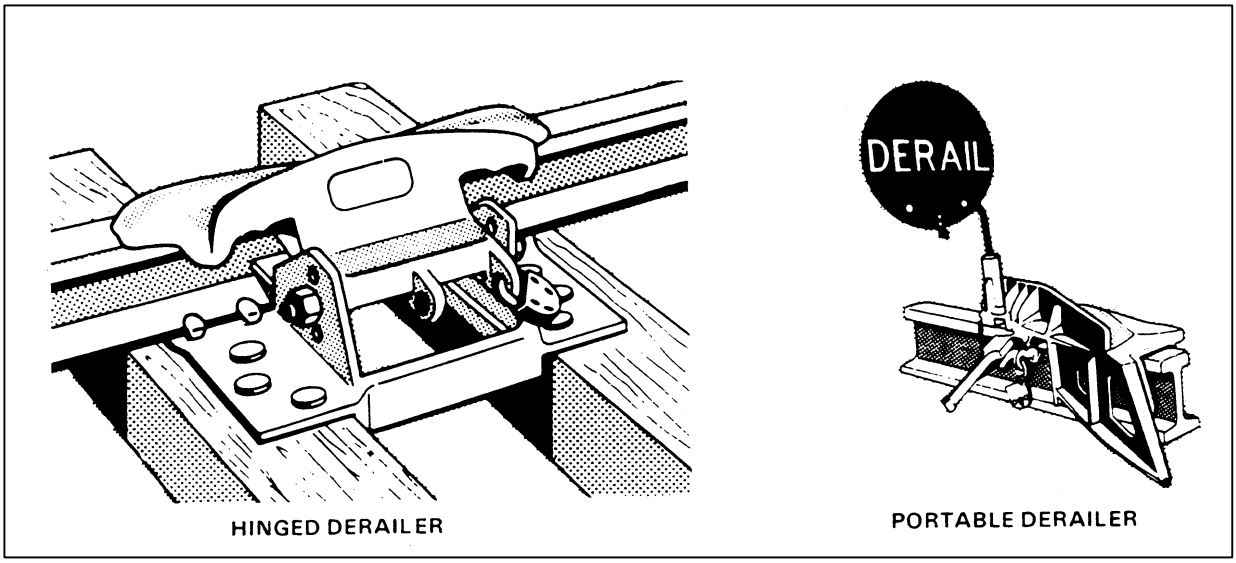

Figure 3-15. Track derails.

<u>h. Securing Equipment</u>.

(1) Locomotives. If locomotives are to be spotted for overnight layover, observe the following:

- Apply the locomotive hand brake.
- Place the reverser handle in neutral position, remove the reverser handle, place the reverser handle under supervised control, and shut down engine using manufacturers' procedures.
- Place all switches on the controller panel in the off position.
- Place all circuit breakers and switches on the circuit breaker panel and the engine control panel in the off position and open all knife switches.
- Cover exhaust stacks if not equipped with external spark arrestors or flappers.
- Drain engine, ensure antifreeze protection, and follow manufacturers' recommendation if freezing weather is probable.

Stored engines shall be turned over at least once a month and (if possible) started and run long enough to reach engine operating temperature for at least 30 minutes.

(2) Railcars. Railcars that are stored require that the various inspection and maintenance dates be honored. Railcars with friction bearings shall be moved a minimum of five car lengths at least every 45 days to prevent journal pitting. If the cars are stored in an area subject to vandalism, the brass journals shall be checked prior to any movement.

i. Weighing of Cars. Cars can be weighed by a variety of means: weigh-in-motion scales; static scales that weigh the whole car at once; or static scales that weigh one truck at a time. To ensure accurate weighing, the procedures recommended for the scale in use shall be followed.

j. Cars Laden with Explosive Material (conventional ammunition, ammunition components, explosives, and other hazardous materials). Refer to NAVSEA OP 5, Vol.1 for information governing the transportation and storage of railway ordnance cars.

k. Handling Special Equipment.

(1) Cranes. Movement plans for equipment such as cranes shall be reviewed for compliance with the unique operational restrictions required by the characteristics of the equipment. Refer to NAVFAC P-307 for specific guidance.

Where possible, crane booms should be in the trailing position to reduce the likelihood of the boom swinging. If the crane boom cannot be placed in a trailing position, an idler (buffer) car shall be used.

The speed of rail crane movement on track shall be restricted due to the short wheelbase, suspension system, and long booms of railroad cranes.

(2) Maintenance of way equipment. The various maintenance of way equipment items will normally be operated by public works or contractor maintenance forces. Movement of this equipment over the rails shall be coordinated through the railroad dispatcher.

(3) Special service cars. Some special service cars in the Navy fleet are either unusually long, have unusual truck configuration (three or four axles per truck) or both. These cars shall be carefully watched when operated around tight curves since the trucks may be unable to accommodate curves beyond a fixed radius and the overhang of long cars may have inadequate clearance. Consult the appropriate Navy Directives for railcars transporting special weapons and ordnance.

l. Handling of Suspect Cars. Suspect cars (cars of unknown contents or have been tampered with) shall be placed in an area designated for storage of suspect cars until they are identified.

m. Derailments and other incidents. The conductor or engineer shall immediately report derailments and other incidents to the dispatcher. Notification shall include location, injuries, the nature of the derailment, and the car numbers and contents of any cars that are involved in the derailment. The dispatcher shall follow the local railroad operating directive.

Note: The crew shall secure the area and keep unauthorized people away from the scene until assistance arrives. Equipment shall not be moved until the investigation is complete except to aid injured personnel or to avoid possible explosion or fire damage.

n. Handling Cars with Defects. The following procedures do not apply to an explosively laden railcar or a cut of cars with at least one explosively laden railcar. See NAVSEA OP 5, Vol I.

(1) Inoperable Brakes - cars with inoperable or malfunctioning brakes may be moved if their brake system can be cut out and the car can be located between two cars that have operating brakes.

(2) Overheated journal - a car with an overheated journal may be moved at walking speed to the nearest set out point.

(3) Broken or cracked wheels - a car with serious wheel defects shall not be moved until maintenance personnel inspect the wheels, and change the wheel set or approve the railcar for movement.

(4) The crew shall report other suspected safety deficiencies to the dispatcher.

(5) When a deficient railcar is picked up or repaired on site, the conductor or engineer shall promptly report to the railroad dispatcher. The report shall include the car number, nature of the defect, whether the car is Navy owned or commercial, and any other information to expedite repairs.

(6) When necessary to set out bad order cars, the conductor or engineer shall promptly report to the railroad dispatcher the car number, nature of the defect, and other information to expedite repairs.

o. Deadman Controls. Locomotive deadman pedals shall not be overridden for any reason. These controls protect lives and property. If overridden, their purpose will be defeated. If a deadman pedal is inoperable, the engineer shall notify the dispatcher immediately.

p. Guidelines for Handling Trespassers or Demonstrators. Refer to specific directives related to this matter. Crew members shall assume that trespassers and demonstrators do not understand the dangers and extended stopping distances of trains. Crews shall respond accordingly. Report all trespassers or demonstrators to security, the dispatcher or both in accordance with the local railroad operating directive.

q. Operation of Car Movers, Hy-rails, Trackmobiles, and Other Track Equipment. Only personnel qualified to operate this equipment shall be permitted to operate them. Operators of this equipment shall follow the manufacturers' operator instructions and the local operating directive.

Operators of this equipment shall contact the dispatcher for clearance to use the rail system, stating the desired locations for the equipment to enter the rail system, the route to be taken, and the destination. All additional movements shall be coordinated in the same manner. When the equipment is removed from the rails, the operator shall notify the railroad dispatcher that the equipment is clear of the rails. The equipment shall not be put back on the rails without a new clearance from the railroad dispatcher.

4. Pre-Departure Brake Tests

a. Locomotive Brake Setup for Multiple Unit (MU) Operation. These setup checklists shall be conducted or confirmed when the engineer first accepts the locomotive from the engine house or the previous shift.

Trailing Locomotive Setup:

- Check to see if the locomotive is already set up for the trailing position. If not, proceed with this checklist.
- Fully apply independent brake.
- With automatic brake valve, make a full "service" brake pipe reduction.
- Depress handle of off pilot valve and move to "out" position.
- Place automatic brake valve handle in "handle-off" position and remove handle.
- Depress handle of MU-2A valve and move to "Trail 26" position.
- Move independent brake valve handle to "release" position and remove handle.

Lead Locomotive Setup:

- Insert brake valve handle in independent brake valve and move to full "applied" position, if not already in this position.
- Depress handle of MU-2A valve and move to "lead" position, if not already in this position.
- Apply automatic brake valve handle to brake valve and move to "release" (running) position, if not already applied or in this position.
- Depress handle of pilot valve and move to 'in'.
- Check feed valve and verify that it is set for 80 psi, reset if necessary.

All locomotives in consist:

- Angle cocks are in proper position between locomotive units.
- MU hoses and cables are properly coupled between units.
- Brake valve out cocks are in the "out" position on all units except the controlling unit.

b. Locomotive Engine Brake Tests for One Unit or MUs. These tests shall be conducted before an engineer moves the locomotives. Equipment shall be fully charged to a main reservoir pressure of 130 to 140 psi.

- Ensure hand brakes are applied and wheels chocked.
- Ensure generator field switch is in the off position.
- Position reversal handle in neutral.
- Ensure brake pipe and MU hoses are properly coupled if applicable.
- Ensure angle and cut out cocks are properly positioned.
- Apply the independent brake and confirm brakes on all units have been applied.
- Depending on the model, do one of the following:

TEST PROCEDURES FOR LOCOMOTIVE TYPES 6RL AND 24RL
1. Release the independent brake and confirm brakes on all units have been released. 2. Make a 10 psi brake pipe reduction with the automatic brake valve, and confirm brakes have been applied. 3. Move automatic brake valve to LAP and wait one minute. ❑ Brake pipe (BP) leakage shall not exceed 5 psi/min. 4. Equalizing reservoir build not to exceed 1 psi/min. 5. Depress independent brake valve handle (4 sec./unit). ❑ Confirm brakes have been released. 6. Make additional brake pipe reduction. ❑ Confirm brakes have been reapplied. 7. Move throttle to #3 position; engine RPM increases. 8. Move brake valve handle to EMERGENCY. ❑ Brake pipe pressure drops to zero. ❑ Brake cylinder pressure increases. ❑ Power control light comes on. ❑ Engine RPM reduces to idle. 9. Depress independent brake valve handle (4 sec./unit). ❑ Confirm brakes have been released. 10. Release independent brake valve handle. 11. Move throttle to idle position. 12. Move automatic brake valve to LAP. 13. Wait one minute. 14. Move auto brake valve to RELEASE. ❑ Brake pipe pressure restored. ❑ Power control light goes out. ❑ Confirm brakes have been released. ❑ Confirm brake system is recharged. 15. Move auxiliary emergency brake valve to EMERGENCY. ❑ Confirm brakes have been applied. 16. Restore automatic brake valve to the release and running position. ❑ Confirm brakes have been released. 17. Move independent brake valve to FULL APPLICATION.

TEST PROCEDURES FOR LOCOMOTIVE TYPE 26 SERIES

1. Release the independent brake and confirm brakes on all units have been released.
2. Make a 10 psi brake pipe reduction with the automatic brake valve, and confirm brakes have been applied.
3. Move brake valve cut-out valve to OUT position and wait one minute.
   - ❑ BP leakage shall not exceed 5 psi/min.
   - ❑ Equalizing reservoir shall not show any leakage.
4. Move automatic brake valve to minimum reduction.
   - ❑ Equalizing reservoir build up not to exceed 1 psi/min.
5. Depress independent brake valve handle (4 sec./unit).
   - ❑ Confirm brakes have been released.
6. Move the brake cut out valve to the IN or FRT position.
7. Make additional brake pipe reduction.
   - ❑ Confirm brakes have been applied.
8. Move throttle to #3 position.
   - ❑ Engine RPM increases.
9. Move automatic brake valve handle to EMERGENCY.
   - ❑ Brake pipe pressure drops to zero.
   - ❑ Brake cylinder pressure increases.
   - ❑ Power control light comes on.
   - ❑ Engine RPM reduces to idle.
10. Depress independent brake valve (4 sec./unit).
    - ❑ Confirm brakes have been released.
11. Release independent brake valve handle.
    - ❑ Confirm brakes have been reapplied.
12. Move throttle to idle position.
13. Wait one minute.
14. Move automatic brake valve to RELEASE.
    - ❑ Brake pipe pressure restored.
    - ❑ Power control light goes out.
15. Confirm brakes have been released.
    - ❑ Recharge brake system.
16. Move auxiliary emergency brake valve to EMERGENCY.
    - ❑ Confirm brakes have been applied.
17. Restore auxiliary emergency brake valve to the release and running position.
    - ❑ Confirm brakes have been released.
18. Move independent brake valve to FULL APPLICATION.

c. Train Line Air Brake Test, Initial Terminal. After the locomotive has been coupled to the cars to be moved and the brake line connected, the train line must be charged. Charging will take approximately 5 minutes for every 10 cars. When charging a train, the main reservoir pressure shall be maintained at 100 pounds or more. To obtain this condition, it may be necessary to place the generator field switch to the off position, place the reverser in neutral, and advance the throttle beyond idle position. This test can be started when the brake pipe air pressure in the locomotive has exceeded 65 psi for 5 minutes.

- Make a 15 pound service reduction with the automatic brake valve and wait for the exhaust to cease.
- Move the brake valve out valve to the "out" position.
- Wait one minute.
- Check to see that brake pipe leakage does not exceed 5 psi per minute by observing the brake pipe pressure indicator gauge for one minute.
- Inspection of the train shall be made to determine that angle cocks are properly positioned, that the brakes are applied on each car, brake rigging does not bind or foul and all parts of the brake equipment are properly secured.
- After all the brakes have been inspected for application, they shall be released and the entire train checked again to confirm that all the brakes have released.

d. Train Line Air Brake Test, Road or Intermediate Test.

- Whenever cars are added to a cut of cars, a set and release brake test shall be made before proceeding.
- Make a 15 pound service reduction. Confirm that the brakes are set on the last car.
- Check for brake pipe leakage per Section 3.4.c.
- Release the brakes and confirm that the brakes have released on the last car.

5. Train Handling.

Proper freight train handling allows for a safe operation and the prevention of damage to track structure, equipment, and lading. Although the presence of slack is required in order to start a train one car at a time, severe slack action is the cause of much serious and avoidable damage. Even though slack action cannot be eliminated, it can be controlled so as to avoid damage and prevent personal injury to train crew members.

Locomotives have maximum continuous amperage limits beyond which damage to the traction motors and the main generator(s) or alternator(s) may result. The manufacturer’s manuals contain these amperage limits. In some cases, they are on the face of the amp meters. When

operating beyond continuous amperage limits **do not** exceed the time limits specified for the locomotive being operated.

a. Starting a Train. The method used in starting trains shall take into consideration makeup of the train and the grade conditions. Judicious planning by the conductor is essential. Grades and train loads may force the use of mutiple units, reduction of train size, multiple moves, or selected service brake air reduction.

Release the automatic and independent brakes. After all brakes have been fully released, open the throttle to position (notch) 1 and note from the ammeter that the amperage is increasing. After 2 to 3 seconds, the throttle may be advanced to position 2 if additional power is needed to start the train.

With some locomotives it may be necessary to regulate starting speed by use of the independent brake and sanders to keep the locomotive moving at a slow, uniform speed of about 1 mph until the entire train is moving.

It may be necessary to stretch or bunch the train in a direction opposite to the intended movement to permit starting one car at a time.

If a train does not start when following these procedures, check for sticking brakes.

Do not advance the throttle while amperage is increasing as indicated by the ammeter. Wait until the train has absorbed the power from the present throttle position.

Reduce the throttle if there is an indication of wheel slip. Apply sand as required to prevent wheel slip.

Care shall be taken whenever a train is started in a curve. When power must be used to start a train, use only sufficient throttle to start the train. Any advance of the throttle shall be made one notch at a time since abrupt increases of draft or buff forces in a curve may generate excessive inward lateral forces and result in “string-lining” of the curve. This effect can be severe enough to shift the track, turn a rail over, or result in a derailment. See Figure 3-16 which illustrates how draft and buff forces affect train movement.

When the locomotive has moved a distance equal to the length of the train and the entire train is moving at a speed of 1 mph, it can be considered started.

b. Service (Automatic or Train Line) Braking.

(1) Level Terrain. Make an initial brake pipe reduction of 5 to 8 psi while maintaining power. Keep the locomotive brakes released.

After the automatic brake becomes effective throughout the train, gradually reduce the throttle but maintain sufficient throttle to keep the train stretched. Properly reducing the throttle also ensures that draft and buff forces are kept to a minimum. Observe ammeter carefully during speed reduction or stopping. If there is excessive amperage draw, reduce throttle one position at a time to prevent excessive traction motor amperage.

Additional light brake pipe reductions may be made to continue to slow the train. Keep the locomotive brakes released. A total brake pipe reduction of not less than 10 psi should be made to ensure that train brakes will fully release later.

If stopping, make a final brake pipe reduction just prior to stopping and allow the locomotive brakes to apply with this final application.

Place the throttle in idle and fully apply the independent brake after the train comes to a stop.

When the necessary speed reduction has been achieved, train brakes may be released if the train speed is high enough to allow the brakes to fully release before the train speed falls to about 10 mph. After placing the automatic brake valve in release position, gradually reduce power so that draft and buff forces remain at a safe level throughout the train as the train brake is releasing.

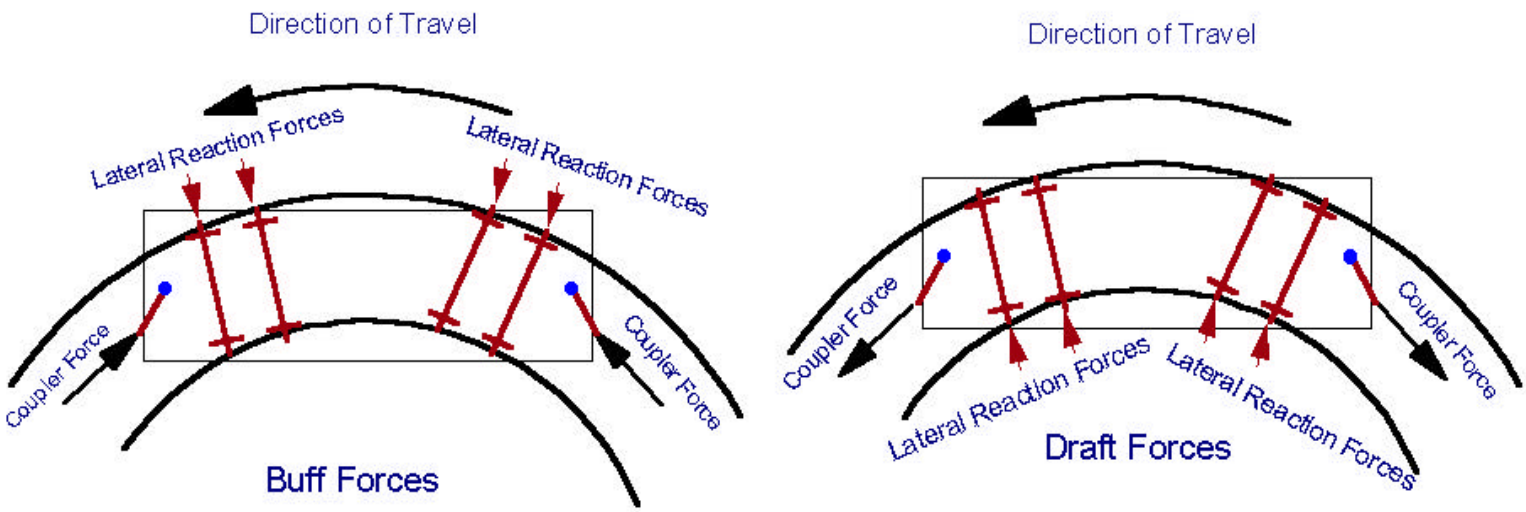

Figure 3-16. Illustration of draft and buff forces.

Since the train will continue to slow as the train brakes release, the brake valve should be placed in the release position before the train speed falls to the desired level. Properly executed, the train brake will be releasing on the rear end just as the train slows to the desired speed.

(2) Ascending Grades. On light ascending grades, braking action is approximately the same as for level terrain.

To stop on heavy ascending grades, reduce throttle one notch at a time until train speed is approximately 5 mph. Close throttle at about 3 mph while making a train brake pipe reduction that will keep the train stretched (generally a 15 psi reduction). Hold the independent (locomotive) brake released until the train stops. Apply the full independent brake after stopping. The goal is to minimize train buff and draft forces (slack changes).

To slow down on heavy ascending grades, reduce throttle one position at a time until desired speed is obtained. Use of service brakes may not be necessary.

(3) Descending Grades. For slowing or stopping on descending grades, it may be necessary to let the train bunch by reducing power before following the braking steps described above for level terrain. After the service brake is released, it will be necessary to apply sufficient independent brake to prevent adverse buff and draft forces (slack changes) as the service brakes release.

c. Emergency Braking. Emergency braking occurs when the brake pipe is opened to the atmosphere, resulting in the rapid reduction of brake pipe pressure to zero. This action is called dumping or busting the air. A crew member shall only apply emergency braking when a stop must be made as quickly as possible. Extremely high buff or draft forces will occur during emergency braking.

Emergency braking occurs in three situations: when the engineer places the automatic brake into the emergency position, when a crew member activates the auxiliary emergency brake valve, or when a brake pipe or air hose separates.

When the emergency brakes have been applied due to a brake pipe or air hose separation, the engineer shall immediately bail off (push down) the independent brake lever, place the automatic brake valve in emergency position, and leave it in that position until the train stops. Most locomotives will automatically dispense sand during emergency braking. If the locomotive does not automatically dispense sand, use sand until the train stops. Place the throttle in idle.

After an emergency application has occurred for any reason, the crew shall not reset the brakes or move the train until the train has been completely inspected by maintenance personnel and the fault which caused the emergency application identified and corrected. After the train has been inspected and any fault corrected, the automatic brake valve can be returned to the running position to release the brakes.

Track inspectors shall inspect the track structure to determine if the emergency application created track damage (shifting of track, kinking of rail or debris on the track).

d. Independent Braking. Stops with Independent (Locomotive) Brakes Only. Independent braking should be avoided if possible. Independent braking should only be used at extremely slow speeds with light loads or emergencies. Stops and slowdowns should be made with the automatic brake when practicable. When only independent brakes are used to slow or stop a train, very little pressure should be used until the train slack has closed in against the locomotive or moved out if backup movement is being made. Independent brakes should be controlled to prevent wheels from sliding and to prevent brake shoe damage. Independent brakes alone should not be used to make stops and slowdowns when speed of the train is more than 15 mph.

Under normal conditions, the independent brake should only be applied when the throttle is in the idle position.

The independent brake valve of the controlling unit of a multi-unit should be in at all times and the handle should not be depressed and blocked in the release position.

The independent brake shall be fully applied and left in that position to prevent the locomotive from moving while refueling or anytime the locomotive is left standing. The independent brake shall be applied except during maintenance of the brakes. In cases where independent brakes cannot be applied, the locomotive shall be chained to the track.

e. Speed Control. The train should be operated within the speed limits set for the track being traversed. However, additional speed issues should be closely monitored.

On cars with truck spacing about equal to the rail length (approximately 39 feet), there is a critical speed at which the car will encounter low joints in harmony with its natural frequency. When the train is traveling at this critical speed, harmonic rock and roll motion can build up to the point where wheel lift occurs and a derailment can result. The critical speed is in the 13 to 20 mph range. This critical speed should be avoided when possible to reduce the risk of harmonic rock and roll derailments. Refer to Figure 3-11. When necessary to pass through this critical speed, the engineer shall plan ahead and avoid this speed by going slower or faster. This critical speed can be determined by observing the train. Crew members shall be on the lookout for excessive rocking which can indicate that harmonic rock and roll is imminent. The engineer shall take appropriate action if there is a problem.

f. Use of Sand. One of the principal factors affecting the tractive effort of a locomotive is adhesion. Adhesion allows for starting, acceleration, maintaining speed, slowing, or stopping. The condition of the rail can have a large effect on adhesion. To overcome the adverse effect of contamination of rail by oil, dirt, water, snow, ice, insects and other substances, most locomotives are equipped with sanders to deliver sand to the rail. The sand will help to increase the adhesion of the locomotive when the above conditions are present. The following cautions apply when using sand:

- Sand use should be restricted to the minimum amount necessary. Excessive use of sand defeats the intended purpose.
- Use of sand in curves should be avoided due to derailment risk resulting from increased curve resistance and the resulting high lateral forces.
- Sanding should be used to prevent wheel slip rather than correct it.

g. Extreme Emergencies. An extreme emergency is when emergency braking needs to be applied because the brake system has failed. When this occurs, use the following emergency procedures:

- Place throttle in idle.
- Place reverser in opposite direction.
- Place throttle in No. 1 notch only.

NOTE A LOCOMOTIVE SHALL NOT BE REVERSED WHILE MOVING EXCEPT TO STOP THE LOCOMOTIVE UNDER EXTREME EMERGENCY SITUATIONS.

THIS PROCEDURE WILL RESULT IN DAMAGE TO THE TRACTION MOTORS AND WHEELS AND SHOULD ONLY BE USED AS A LAST RESORT TO AVOID AN ACCIDENT.

6. Radio Procedures.

<u>a. General</u>. The following applies:

- Railroad operations shall have its own dedicated frequency, and no other organization at the installation shall use the railroad's assigned frequency.

- Radios and radio frequencies assigned to rail crews shall only be used for the conduct of railroad operations.

- As required by NAVSEA OP 5, all radios used in railroad operations around ordnance shall be HERO-certified (Hazards of Electromagnetic Radiation to Ordnance). A sticker indicating HERO certification shall be attached to the radio. No person shall use a radio without the HERO certification sticker.

- Employees shall keep radios in the "on" position with the selector switch set for proper channel, and the volume adjusted to receive communication.

- Each radio shall be tested before being used to support railroad operations. The test shall consist of an exchange of voice transmissions with another station. The other station will advise the station conducting the test of the quality and readability of its transmission.

- Before transmitting, an employee shall listen to ascertain that the channel is not in use. Any radio found to be functioning improperly shall be reported to the railroad dispatcher or designated authority.

- Employees shall not knowingly transmit any false emergency communication, any unnecessary, irrelevant, or unidentified communication, nor utter any obscene, indecent, or profane language via radio.

- All transmissions on the radio shall be clearly made in a concise manner to avoid confusion and excessive transmission time.

- To indicate that a transmission is ended and that a response is expected, the transmitting employee should say "over." To indicate that a transmission is ended and that no response is expected, the transmitting employee should restate his identifications and say "out."

- All transmissions should start with a clear identification of who is making the transmission (name and position), the location and train identity (if applicable) from which the transmission is being made, and to whom (name and position, and location and train identity, if applicable) the transmission is directed.

- After positive identification is established, employees may use abbreviated identifications.

- When radios are being used to control the movement of a locomotive, transmissions to the locomotive shall include the locomotive number.

- When radios are being used to perform switching, the employee directing the movement shall keep in constant radio contact with the employee receiving the instructions. If there is doubt of either the meaning of the instructions or the employee for whom such instructions are intended, the movement shall be stopped and shall not be resumed until the instructions are understood. Switching, backing or pushing movement distances shall be specified in 50-foot car lengths. The engineer shall stop the movement in one-half the specified distance, unless additional directions are received.

b. Transmission of Train Orders by Radio.

(1) Train orders shall be transmitted by radio only when authorized by the local railroad operations directive and must be transmitted in accordance with that directive.

(2) The procedures for transmission of train orders by railroad dispatcher or designated representative are as follows:

- Before a train order is transmitted, the conductor copying the train order shall state that he is prepared to receive the train order. The conductor shall state his name, identification or call sign, and location.

- Train orders should not be transmitted to the crew of a moving train when, in the judgment of either the conductor, the engineer, or the train dispatcher, the train order cannot be received and copied without impairing the safe operation of their train. Conductors shall copy train orders in the format prescribed in the local railroad operations directive.

- After the train order has been copied, it shall be immediately repeated in its entirety. After verifying the accuracy of the repeated train order, the dispatcher or designated representative shall state "complete," the time, and the initials of the conductor. Conductors copying train orders shall then acknowledge by repeating "complete" and the time.

- Before a train order is acted upon, the conductor shall have a written copy of the train order and shall ensure the train order is read and understood by other members of the crew.

- A train order which has not been completed or which does not comply with the requirements of the operating rules, shall not be acted upon. Information contained in a train order shall not be acted upon by persons other than those to whom the train order is addressed.

RECOMMENDED PHONETIC ALPHABET

A-ALFA	O-OSCAR
B-BRAVO	P-PAPA
C-CHARLIE	Q-QUEBEC
D-DELTA	R-ROMEO
E-ECHO	S-SIERRA
F-FOXTROT	T-TANGO
G-GOLF	U-UNIFORM
H-HOTEL	V-VICTOR
I-INDIA	W-WHISKEY
J-JULIET	X-XRAY
K-KILO	Y-YANKEE
L-LIMA	Z-ZULU
M-MIKE	
N-NOVEMBER	

The letter 'ZULU' should be written as "Z" to distinguish it from the numeral "2."

RECOMMENDED PRONUNCIATION OF NUMERALS

To distinguish numbers from similar sounding words, the word "figures" should be used preceding such numbers. Numbers should be pronounced as follows:

Number	Spoken
0	ZERO
1	WUN
2	TOO
3	THUH-REE
4	FO-WER
5	FI-YIV
6	SIX
7	SEVEN
8	ATE
9	NINER

(The figure ZERO should be written as "0" to distinguish it from the letter "O." The figure ONE should be underlined to distinguish it from the letter "I." When rules require that numbers be spelled, these do not apply.)

The following examples illustrate the recommended pronunciation of numerals:

Number	Spoken	Number	Spoken
44	FO-WER FO-WER	500	FI-YIV HUNDRED
1000	VvrUN THOUSAND	1600	WUN SIX HUNDRED
14899	WUN FO-WER ATE NINER NINER		
20.3	TOO ZERO DECIMAL THUH-REE		

c. HERO Considerations. Refer to the local railroad operating directive concerning radio transmissions in the vicinity of explosives.

d. Emergency Transmissions. An emergency call shall be preceded by the word "EMERGENCY" transmitted three times. Such calls shall relay essential information and be used only to cover initial reports of serious injuries, derailments, collisions, fires or any other accident which pose risk to personnel or property.

7. Dispatching.

Train dispatchers or designated representative shall have sole authority to dispatch all train and railroad equipment, issue and receive train orders, grant clearances, and control all movement on the rail system.

Dispatching of trains and locomotives shall be recorded either manually or electronically as the movement occurs in accordance the local railroad operations directive. The purpose of recording the movement is twofold: to help oncoming shifts know the location of all railroad equipment and to have a history of rail equipment movement for mishap investigation.

If absolute blocks are used, the dispatcher shall ensure that permission is only granted when it is safe to do so.

8. Crew Size.

All train crews shall consist of at least three personnel: an engineer, a conductor and a braker/switcher. Crew size shall not be reduced except where a written waiver has been granted by the Installation Commander. The waiver request shall include the specific operations and the reason why a reduction in crew size is necessary. The waiver request shall also include number of cars to be handled, railcar contents, switching procedures, time sensitivity of work, and environmental conditions. The Installation Commander shall not grant the waiver until a thorough review has been conducted. NAVSEA OP 5, Vol I, requires crew size of at least three personnel for trains bearing ammunition or explosives.

9. Hazardous Material (Haz Mat).

a. Prevention. Many Naval activities move significant quantities of hazardous material by rail. Placarded cars such as Explosives Class 1 are a common occurrence. Employees shall constantly strive to avoid becoming complacent and taking shortcuts that create dangerous situations when dealing with these types of shipments.

b. Derailment Issues. Installation Commanders shall ensure that a current list of cars in the train, their respective location, and their contents is maintained. Thus if an accident occurs, the type and location of all hazardous materials will be known. Any derailment or other accident involving hazardous material(s) shall be reported immediately to the railroad dispatcher and immediate steps taken to evacuate personnel from the area.

c. Emergency Response. Upon notification of a hazardous material accident, the railroad dispatcher shall notify all appropriate installation personnel and give instructions to the crew as to how they are to respond.

d. Use of Placards. Placards shall be used to identify the nature of the commodity in the railcar. Crew members shall be conversant with the meaning of the various placard designations. See Figure 3-17 for graphics of the various placards described below.

In a moving or standing train, a car placarded "Radioactive" shall not be placed next to any other loaded placarded car (other than one placarded "Combustible"), a locomotive, occupied caboose, or carload of undeveloped film. Cars placarded "Radioactive" may be placed next to each other.

In a moving or standing train a loaded placarded tank car, other than one placarded "Combustible," shall not be placed next to:

(1) Any car placarded "Explosives Class 1," Radioactive," or Poison Gas."
(2) A locomotive or occupied caboose.

Explosives Class/Division 1.1 - Items with this placard are capable of mass explosion when subjected to fire, strong impact, or shock. If the material itself is on fire, attempting to extinguish the fire is not recommended; if fire is not present, every effort must be made to prevent fire and to keep the explosives from coming in contact with other chemicals. Recommended evacuation distance for Class/Division 1.1 nvolved in a fire is 1 mile.

Explosives Class/Division 1.23 – Items with this placard are capable of producing hazardous projections (fragments) when subjected to fire, strong impact or shock. If the material itself is on fire, attempting to extinguish the fire is not recommended; if fire is not present, every effort must be made to prevent fire and to keep the explosives from coming in contact with other chemicals. When involved in a fire, recommended evacuation distance for Class/Division 1.2 explosives is one mile.

Explosives Class/Division 1.3 - Items with this placard are capable of burning rapidly and causing sudden, violent rupture of cars or containers when involved in fires. It is virtually impossible to extinguish the material when a fire has started. In the event of fire, recommended evacuation distance is 1 mile. When not on fire, Class/Divsion 1.3 explosives shall be protected from being struck, crushed, exposed to fire or contacting corrosive materials.

Explosives Class/Division 1.4 – Items with this placard are capable of producing minor explosion hazards and minor projections when subjected to fire, strong impact or shock. When involved in a fire, recommended evacuation distance for Class/Division 1.4 is 1/3 mile.

Explosives Class/Division 1.5 – Items with this placard are very insensitive but are capable of mass explosion when subjected to fire, strong impact or shock. If the material is on fire, attempting to extinguish the fire is not recommended; if fire is not present, every effort must be made to prevent fire and to keep the explosives from coming in contact with other chemicals. When involved in a fire, recommended evacuation distance from Class/Division 1.5 explosives is one mile.

Explosives Class/Division 1.6 – Items with this placard are extremely insensitive and are capable of producing hazardous projections when subjected to strong impact or shock. If the material is on fire, attempting to extinguish the fire is not recommended. If fire is not present, every effort must be made to prevent fire and keep the explosives from coming in contact with other chemicals. When involved in a fire, recommended evacuation distance for Class/Division 1.6 explosives is one mile.

Dangerous - Items with this placard contain irritating materials or mixed loads of certain hazardous materials. Irritating materials are moderately dangerous materials that give off intensely irritating fumes on exposure to air or contact with fire. Although noxious and irritating, the effects are usually temporary.

Blasting Agents - Items with this placard are subject to explosion when involved in fire, although impact or friction may not cause an explosion. If the material itself is on fire, attempting to put out the fire is not recommended. Every effort shall be made to prevent the material from becoming involved in fire. Recommended evacuation distance when the material is on fire is 1/2 mile.

Poison Gas (Zone A) - Items with this placard are gases or liquids which can give off highly toxic vapors if released from their containers. Vapors from Poison "A" materials can be fatal if inhaled or absorbed through the skin. As vapors are often colorless and odorless, any suspected leak shall be investigated only by protected specialists. In the event of fire or leak, evacuation for a 1/2 mile radius is recommended with consideration given to weather conditions, location, and amount of material spilled.

Chlorine - Items with this placard are nonflammable gases with many of the properties of poison gas materials. The greenish-yellow vapors are highly toxic and tend to hug the ground. If the material is leaking or on fire, consider an evacuation distance of 1/2 mile.

Poison - Items with this placard are liquids, solids or semisolids. Although less dangerous than poison gases, they are still toxic to humans when inhaled, absorbed through the skin, or ingested (eaten). Suspected spills shall be investigated only by protected specialists and all others evacuated from the immediate area. If material is on fire, contact with the smoke must be avoided.

Radioactive Materials - Items with this placard are materials which emit ionizing radiation that is hazardous. The radiation is invisible, cannot be felt, and can only be detected with specialized equipment. In the event of a suspected leak or rupture of container, personnel shall be evacuated for several hundred yards until the area is surveyed by specialists.

Flammable Gases - Items with this placard are materials which are often ignited immediately after a breach of the container. If ignition does not immediately occur, the vapors will often flow until an ignition source is reached. A flashback can then occur, igniting the entire gas cloud. A leak that has ignited should not be extinguished unless it can be stopped. Tanks containing flammable gases that are exposed to flame impingement or intense heat may rupture violently, producing a large fireball, and hurling fragments of the container up to 1/2 mile, or more. This reaction should be taken into consideration in determining evacuation distances. These materials

may also be toxic or irritating and may cause suffocation by the displacement of oxygen and frostbite injuries through contact with the liquid.

Flammable Liquids- Items with this placard are flammable liquids which give off vapors at less than 100 degrees F and will ignite on contact with an ignition source. These vapors are usually heavier than air and will flow into low lying areas such as ditches and ravines.

Action shall be taken to keep ignition sources away from areas of vapor concentration. Contact with corrosive materials can cause ignition and shall be prevented.

Flammable Solids - Items with this placard are materials that can cause fires by self-ignition or spontaneous combustion under conditions such as being exposed to air, being crushed, coming in contact with corrosive or oxidizing materials, or outside ignition sources. When appropriate, fires should be fought with wet dirt or sand, keeping the flammable solid isolated from other hazardous materials.

Spontaneously Combustible - Items with this placard are liquids less dangerous than flammable liquids due to their higher flashpoints; however, leaks, spills and fires should be handled in the same manner as flammable liquids.

Corrosive - Items with this placard are acids or caustics in either liquid or solid form which cause visible or irreversible damage to human tissue or severe corrosion on steel. In addition, contact with other materials such as flammables, oxidizers, or explosives may cause violent reactions or fires. If possible, spills should be contained by protected personnel. Neutralization of spilled material may be accomplished by trained specialists using appropriate materials. Spills of corrosive materials may produce large quantities of fumes which may be toxic and cause eye, skin, or respiratory damage. Persons coming in contact with corrosive materials should wash immediately with water for at least 15 minutes and then contact a physician.
Oxidizers - Items with this placard readily yield oxygen and will greatly accelerate burning. In the event of spill, these materials must not be allowed to come in contact with combustible or flammable materials, corrosive materials, or organic matter. Water can be used to fight fires involving liquid oxidizers. Wet dirt or sand should be used to fight fires involving solid oxidizers.

Organic Peroxides - Items with this placard are strong oxidizing agents. In addition, when heated or subjected to strong shocks, organic peroxides can decompose rapidly with explosive force. Care must be taken to avoid contamination of organic peroxides by other chemicals as violent chemical reactions can occur.

Oxygen - Items with this placard, refrigerated liquid oxygen, if allowed to come in contact with combustible or oxidizing materials may result in rapid combustion or explosion. Sources of ignition, sparks, impacts, friction, or sudden shocks should be prevented in the spill area. Contact with the liquid can result in severe frostbite.

Nonflammable Gas - Items with this placard are gases that can cause suffocation by displacing oxygen. They may be toxic or irritating; and contact with the liquid may cause frostbite injuries. Containers that are exposed to flame impingement or intense heat may rupture violently, hurling fragments great distances. An evacuation distance of 1/2 mile is recommended.

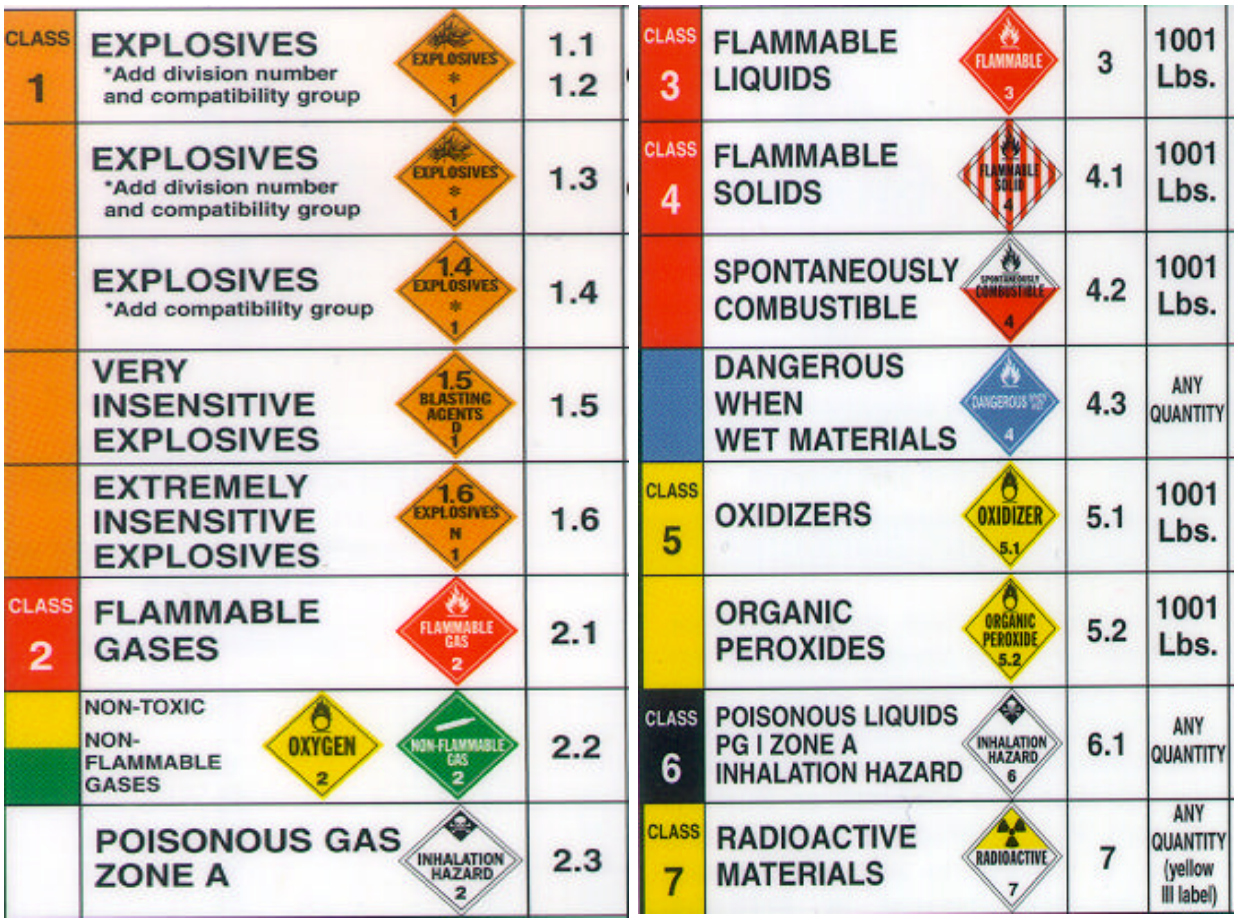

Figure 3-17. Examples of hazardous materials warning placards.

Section 4.
SKILL AREAS

1. Job Descriptions

a. Locomotive Engineer. The duties of a locomotive engineer will include:

(1) Observe all rules and practices in this manual, especially Section 3- Operation, Practices, and Procedures and local directives applicable to the job function of a railroad train engineer.

(2) Operate the train in a safe manner and follow required train handling practices at all times. Remain on the locomotive and give close attention to signals during switching and coupling operations.

(3) Assumes charge of the train when the conductor is absent because of an emergency. The railroad supervisor shall provide guidance/instructions to the engineer.

(4) Control and care for the assigned locomotive and ensure economical use of fuel and supplies.

(5) Observe the condition of the train while underway, looking back frequently, especially while rounding curves. Ensure other crewmembers in the cab inspect the train as conditions permit.

(6) Observe the condition of the right of way being on a constant look out for track defects, switches not properly lined, derails, and other obstructions or equipment that may be fouling the track.

(7) Conduct all required inspections of the locomotive, record deficiencies/defects on the prescribed form and promptly report to the railroad supervisor.

b. Conductor. The duties of a conductor will include:

(1) Observe all rules and practices in this manual, especially Section 3, and local directives applicable to the job function of a railroad conductor.

(2) Supervise all other members of the crew and coordinate the train's operation. Assign duties as necessary to complete the work assigned to the crew.

(3) Receives train movement orders and car spotting instructions from the dispatcher or designated representative.

(4) Direct the safe movement and care of the locomotives, railcars, and other equipment assigned to the train.

(5) Monitor the train's operation at all times.

(6) Control and care for all equipment under his supervision such as railcars, radios, and supplies.

(7) When conditions permit observe the condition of the train while underway, looking back (if on the locomotive) or forward (if on the rear of the train) frequently, especially while rounding curves. The conductor will ensure that all other crewmembers also inspect the train as conditions permit.

(8) Observe the condition of the right of way being on a constant lookout for track defects, switches not properly lined, derails, and other obstructions or equipment that may be fouling the track.

(9) Conduct all required inspections of the train, record deficiencies/defects on the prescribed form and promptly report to the supervisor.

(10) Report to the railroad dispatcher the nature and extent of any incident or condition which prevents assignments and train movement orders from being carried out and request clarification of orders before proceeding.

c. Braker/Switcher. The duties of a braker/switcher will include:

(1) Observe all rules and practices in this manual, especially Section 3, and local directives applicable to the job function of a braker/switcher.

(2) Complete duties as assigned by the conductor or the engineer in the absence of the conductor.

(3) Position switches as required and return them to proper position after use.

(4) Give hand, flag, or lamp signals as required, using required safety equipment.

(5) Couple and uncouple railcars as required.

(6) Set and release hand brakes and chock wheels as required.

(7) When conditions permit, observe the condition of the train while underway, looking back (if on the locomotive) or forward (if on the rear of the train) frequently, especially while rounding curves.

(8) Observe the condition of the right of way being on a constant lookout for track defects, switches not properly lined, derails, and other obstructions or equipment that may be fouling the track.

(9) Assist the conductor in performing all required inspections of railcars and promptly report any defects/deficiencies to the conductor.

d. Dispatcher/Yardmaster. The duties of a dispatcher/yardmaster will include:

(1) Observe all rules and practices in this manual, especially Section 3, and local directives applicable to the job function of a dispatcher/yardmaster.

(2) Coordinate all moves on the railroad trackage under his jurisdiction. Such moves would include any train, track mobile, hy-rail, motor car, or any other special rail equipment which involve some piece of equipment fouling the track in any way.

(3) Issues train movement orders. The dispatcher/yardmaster is the sole authority for movement of all rail equipment on the track system.

(4) Record all rail related movements.

(5) Record all rail restrictions such as special speed restrictions, out of service conditions, and any other events or conditions that affect the track's status.

(6) Maintain current lists of the location of all railcars and special rail equipment on the activity's rail network.

(7) Prepare switch lists or movement lists for train crews.

(8) When directed by local SOP, coordinate with the serving commercial carrier relative to interchange movements.

(9) Coordinate all radio transmissions related to the operation of the rail network and conduct radio checks for various personnel.

(10) Maintain a current list of procedures, contact names, and numbers for the various potential emergency situations. Such situations may include any combination of the following examples: derailment, crossing accident, personnel injury, trespasser injury, railcar fire, right-of-way fire, potential radioactive release, and ordnance involvement.

e. Railroad Supervisor. The duties of the railroad supervisor follow:

(1) Supervises the railroad operation.

(2) Plans and schedules the work to be accomplished.

(3) Plans for the effective, efficient, and safe use of personnel in accordance with available resources and priorities.

(4) Plans for the effective, efficient, and safe use of equipment in accordance with available resources and priorities.

(5) Inspects work progress to ensure that the work is being done effectively, efficiently, and safely and takes corrective action as necessary.

(6) Maintains liaison with railroad users to ensure that their needs are being met and takes corrective actions when they are not being met.

(7) Maintains liaison with the other organizations that support the railroad operation to ensure that the railroad's needs are being met and recommends corrective actions when the railroad's needs are not being met.

(8) Manages all incoming and outgoing commercial cars to ensure that they are dealt with effectively, efficiently, and safely.

(9) Maintains records (such as car moves, car locations, switch requests, spotting requests, etc) to aid in the effective, efficient, and safe use of the railroad.

(10) Plays a principle role in the preparation of all railroad operations governing documents and ensures that the portions of the document(s) that are under his/her purview are implemented.

(11) Maintains knowledge of current railroad practices.

(12) Maintains an effective training program and acts as a trainer when required.

(13) Enforces safety, fire, and security regulations and maintains good housekeeping in all work areas.

(14) Performs as a dispatcher, conductor, engineer, or braker/switcher if qualified and if required to do so.

Section 5.
LOCOMOTIVE AND RAILCAR MAINTENANCE

1. General.

Timely maintenance of locomotives and railcars is essential to their effective and safe operation. When a regular schedule of inspecting, servicing, and preventive maintenance is followed, problems that can degrade effective and safe operation can be discovered and corrected before they cause serious maintenance costs or accidents. Locomotive and railcar equipment maintenance is a team effort involving the railroad supervisor, the rail crews, and maintenance personnel. Individual activities may make these maintenance requirements more stringent but not reduce them. Installation Commanders shall have procedures for maintaining a system (tickler system) which will automatically remind maintenance personnel when a maintenance action (inspection or service) must be performed. This system shall provide Installation Commanders with warnings far enough in advance to achieve an effective allocation of maintenance resources. A computerized tickler system with software that displays 60 day, 30 day, and 10-day warnings upon computer start-up is preferred.

2. Daily Locomotive Maintenance – Maintenance Department.

Maintenance personnel shall ensure that all locomotives are checked and serviced prior to daily operation. Form 5, Appendix B, contains a list of the items which maintenance personnel must check during this daily inspection. Form 5 shall be maintained for at least 30 days.

3. Quarterly Locomotive Maintenance - Maintenance Department.

During quarterly inspections, maintenance personnel shall inspect all items required for the daily inspection, the manufacturer's recommendations for quarterly inspections and the following:

a. Air Hoses. Inspect for age/signs of damage; renew brake pipe air hoses every eight years.

b. Battery. Check batteries for dirt and corrosion, and clean; clean battery terminals and check batteries for proper bracing in battery compartment. Use proper safety equipment when servicing batteries.

c. Drive Belts. Check all drive belts for cracks, fraying, or abrasions and adjust or replace as necessary.

d. Engines. Check for loose parts or components; leaks from fuel, lubrication, and cooling system; low oil pressure, high temperature, overspeed devices, and shutdown systems.

e. Electrical Relays, Contacts and Contactors. Wipe silver-faced contacts using clean, lint-free cloth; renew worn contact points as necessary; renew weak or broken springs; tighten loose screws, nuts, and connections; with systems de-energized, operate devices manually to detect friction or binding. Always use lock-out, tag-out procedures.

f. Charging Generator. Check for proper output.

g. Pedestal and Journal Box Wear Plates. Check for damaged or excessively worn wear plates.

h. Electrical Brushes. Check brushes in traction generators, traction motors, and charging generator for excessive wear or damage. Replace as required.

i. Air Gauges. All gauges used by the engineer for braking the train or locomotive shall be tested by comparison with a dead weight tester or test gauge designed for this purpose. Maximum error – 3 psi.

j. Safety Appliances (ladders, handholds, steps, etc.). Check for defects and proper mounting.

k. Air brake System. Check for air leaks and proper operation.

l. Brake Shoes. Check for thickness remaining and replace if necessary.

m. Brake Linkage. Check pins, cotters, linkage alignment and adjust as necessary.

n. Lights. Check headlights, beacon light, ground lights, cab lights, step lights, coupler lights, and marker lights for proper operation and repair as necessary.

o. Horn and Bell. Check for proper operation and repair as necessary.

p. Windshield Wipers. Check for operation and repair as required.

q. Sanders. Check for proper operation and adjust as necessary.

r. Spark Arrestors. Check and clean as required by manufacturer's procedures.

s. Event Recorders. Verify operation and security.

NOTE: ALL QUARTERLY INSPECTION ITEMS SHALL BE DOCUMENTED ON THE SHOP REPAIR ORDER AND MAINTAINED IN THE HISTORICAL RECORDS FOR THE LIFE OF THE EQUIPMENT.

4. Annual Locomotive Maintenance - Maintenance Department.

During annual inspections of locomotives, maintenance personnel shall inspect all items required for the quarterly inspection, manufacturer's recommendations for quarterly inspections and the following:

a. Wheels. Inspect for chips, gouges, cracks, flat spots, narrow flange, high flange and rim thickness and resurface or replace as necessary.

b. Center Plates and Bearings. Check wear rings and wear plates for excessive wear, cracks, or damage; repair as required and lubricate bearings.

c. Side Bearings. Check clearances and adjust as required; renew worn plates and rollers. See CFR 49, Part 229.69 for guidelines on tolerances.

d. Engine Cooling Tank. Flush and refill in accordance with environmental regulations.

e. Fuel Oil Tank. Check tank sump for moisture or contamination; drain and clean as required in accordance with environmental and local fire/safety regulations.

f. Air brake Filters. Clean, repair or replace all filtering devices or dirt collectors in the air compressor, air lines, and air reservoir systems.

g. Axle Bearings – Plain Journal. Inspect bearing surfaces for pitting, grooving, scoring or excessive wear; replace bearings as required; inspect journal box seals; and replace as required. Use CFR 49, Part 229.64 as a guideline.

h. Axle Bearings – Roller. Inspect bearings for signs of lubricant loss or overheating; and ensure axle end screws are tight.

i. Trucks. Visually inspect truck frames, truck springs, and equalizers for signs of distortion or damage. Repair using CFR 49, Part 229.67 as a guideline.

j. Gears. Remove lower gear case covers and inspect axle drive gears and pinions for signs of excessive wear or damage; clean sludge from inside of gear cases and re-lubricate gears.

k. Air brake System Control Valves. Clean, repair, and test the brake cylinder relay, feed, and reducing valves. Use test stand if available; otherwise, use the manufacturer's troubleshooting guide.

l. Air Compressor. Check for proper output and cycling. Clean, adjust, and lubricate compressor governor. Use CFR 49 and manufacturer's specifications as guidelines.

m. Couplers. Check for proper operation, swing, height, and excessively worn components. Use CFR 49, Part 229 as guidelines.

n. Traction Motor Nose Suspension. Inspect for worn or frayed pads and ensure retainers such as nuts and cotter pins are secure.

o. Traction Motor Support Bearing Lubricators. Inspect for proper operation and lubricate as required.

p. Traction Motors and Traction Generators. Blow out with clean dry air; inspect commutator, brush holders, insulators, bands, and connections and resurface commutator when required.

NOTE: AN ACTIVITY THAT DOES NOT HAVE THE CAPABILITY TO REPAIR DEFECTS DISCOVERED DURING AN ANNUAL INSPECTION SHALL DO THE MOST ECONOMICAL OF THE FOLLOWING: REPLACE THE NEXT HIGHER COMPONENT WHICH WILL ELIMINATE THE DEFECT OR REFER TO A DEPOT LEVEL REPAIR FACILITY. IN NO CASE SHALL A LOCOMOTIVE BE ALLOWED TO OPERATE WITH A DEFECT THAT DEGRADES SAFETY.

5. Biennial Locomotive Maintenance (every 2 years).

During biennial inspections of locomotives, maintenance personnel shall inspect all items required for the annual inspection, manufacturer's recommendations for annual inspections and the following:

a. Air Brake Systems. All valve portions in the air brake system shall be removed, cleaned and serviced. Use CFR 49, Part 229.29 as a guideline.

b. Main Reservoir Air Tank. For main reservoir air tanks that do not have telltale holes drilled on the surface, a hydrostatic pressure test of 175 psi and a hammer test over the entire tank surface shall be conducted every two years, not including aluminum tanks. Use CFR 49, Part 229.31 as a guideline.

6. Locomotive Maintenance – General Requirements.

- All components used in the repair or replacement of any part of a locomotive shall be compatible with the part being replaced.

- Fan openings, exposed gears and pinions, exposed moving parts of mechanisms, pipes carrying hot gases and high voltage equipment, switches, circuit breakers, contractors, relays, grid resistors, and fuses shall be in non-hazardous locations or equipped with guards to prevent personal injury.

- Exhaust stacks shall be of sufficient height or other means provided to prevent entry of products of combustion into the cab or other compartments under usual operating conditions.

- Battery compartments shall be vented to prevent the accumulation of explosive gas.

- The letter “F” shall be legibly shown on each side of every locomotive near the end. For identification purposes, this will be known as the front end.

- The words "emergency brake valve" shall be legibly stenciled or marked near each brake pipe valve or an adjacent badge plate.

- The main reservoir of each locomotive shall be equipped with at least one safety valve that shall prevent an accumulation of pressure of more than 15 psi above the maximum working air pressure.

- Each compressor governor used in connection with the automatic air brake system shall be adjusted so that the compressor will start when the main reservoir pressure is not less than 15 psi above the maximum brake pipe pressure. It will not stop the compressor until the reservoir pressure has increased at least 10 pounds.

- Locomotive brake piston travel shall provide sufficient brake shoe clearance when released.

- Locomotive brake piston travel shall not exceed 1 1/2 inches less than the total travel when applied and shall not exceed eight inches, total.

- Locomotive brake cylinder minimum pressure shall be 30 psi (or latest requirement).

- A lever, rod, brake beam, hanger, or pin should not be worn through more than 30 % of its cross-sectional area, cracked, broken, or missing. All pins shall be secured in place with cotters, split keys, or nuts. Brake shoes shall be fastened with a brake shoe key and aligned in relation to the wheel to prevent localized thermal stress at the edge of the rim or the flange.

- Leakage from control air reservoir, related piping, and pneumatically operated controls shall not exceed an average of 3 psi per minute for three minutes.

- Oil shall be visible in all plain bearing boxes. No plain bearing boxes shall be cracked to the extent that they leaks oil.

- No part or appliance of a locomotive except the wheels, flexible nonmetallic sand pipe extension tips, and trip cock arms shall be less than 2 1/2 inches above the top of the rail.

- On standard gauge locomotives, the distance between the inside gauge of the flanges on narrow flange wheels shall not be less than 53 inches or more than 53 1/2 inches. The distance between the inside gauge of the flanges on wide flange wheels shall not be less than 53 inches or more than 53 1/4 inches. The distance between flanges mounted on the same axle and measured back-to-back at three points equally spaced shall not vary more than 1/4 inch.

- All doors and cover plates guarding high-voltage equipment shall be marked "Danger-High Voltage" or with the word "Danger" and the normal voltage carried by the parts so protected.

- Cab seats shall be securely mounted and braced. Cab doors shall be equipped with a secure and operable latching device.

- Floors of cabs, passageways, and compartments shall be kept free from oil, water, waste or any obstruction that creates a slipping, tripping, or fire hazard. Floors should be properly treated to provide secure footing.

- Broken front/rear facing locomotive cab windows shall be replaced per CFR 49 Part 223.

- Broken side facing windows shall be replaced in accordance CFR 49 Part 223.

7. Railcar Inspection and Maintenance - Maintenance Department.

a. Annual Inspections. An annual, visual inspection of the railcar to determine its readiness for operation and the need for essential repairs shall be performed and shall include the following items:

(1) Clean, oil, test and stencil (COT&S) shall be conducted for all brake systems other than AB, AB-1-B, ABC-1, ABD, ABD-L, ABD-l-B, ABDW.W, and ABDW-1-B. COT&S shall also be conducted whenever the brake system fails the single-car air brake test. If new models require less COT&S, use manufacturer's recommendations.

(2) Safety Appliance (ladders, handholds, steps, etc.).

(3) Air lines and air hoses including all fastening.

(4) Brake shoes.

(5) Couplers.

(6) Draft gear keys and locks.

(7) Wheels.

(8) Journal bearings and joule box.

(9) Hand brake.

(10) Truck frames and springs.

(11) Doors.

(12) Flooring.

(13) Any abnormal loose, broken, or hanging equipment.

b. Triennial Inspections. Consult Appendix A for specific requirements for items listed below. A triennial (36 months) inspection of the railcar to determine its readiness for operation and the need for essential repairs shall be performed and include the annual items plus the following additional items:

(1) Brake beams and brake beam hangers.

(2) Draft yokes.

(3) Brake rods, levers, and linkages.

(4) Truck bolster.

(5) Draft gear and followers.

(6) Cross bearers and cross ties.

(7) Axles.

(8) Underfloor stringers.

(9) Side bearings.

(10) Center bearings- Lift car, inspect, and lubricate.

(11) Axle bearings. Plain journal--Remove bearings and inspect for pitting, grooving, scoring or excessive wear. Inspect bearing wedge. Replace journal box rear seal and lid seal. Renew journal box oil and bearing lubricator pad.

(12) Axle bearings, Roller--Inspect for signs of lubricant loss or overheating. Tighten end cap crews. Inspect bearing adapters for excessive wear.

c. 72-Month Inspections. Consult Appendix A for specific requirements for items listed below. A 72-month inspection of the railcar to determine its readiness for operation and the need for essential repairs shall be performed and include the annual and 36 month items plus the following COT&S additional items:

(1) COT&S shall be conducted if any of the following brake systems are applicable: AB, AB-1-B, ABC-1, ABD, ABD-L, ABD-l-B, ABDW.W, and ABDW-1-B. Newer models or modifications may require less COT&S. See manufacturer's recommendations for these models or modifications.

(2) Clean assemblies and renew all rubber parts of the brake control valve including the Service Portion, the Emergency Portion, and the Pipe Bracket. In lieu of in-house repairs, replace the valve with a commercially rebuilt valve of the same type.

(3) Clean retaining valve and test.

(4) Clean dirt collector.

(5) Clean air brake cylinder and renew packing.

(6) Tighten all gland nuts on compression type fittings.

(7) Clean modulating valve and replace all rubber parts.

(8) Clean air cylinder release valve and replace all rubber parts. Test operation.

(9) Clean vent valves.

(10) Replace pipe bracket strainer.

(11) Install new air hose gaskets.

(12) Perform Single-Car Air Test.

d. Railcar Unscheduled Inspections. Consult Appendix A for specific requirements for items listed below. The below inspections shall be performed under the following conditions:

(1) COT&S shall be conducted if any of the following apply:

- when the brake valve has been submerged in any fluid or powdery substance.
- when broken or damaged service, emergency or pipe bracket portion is renewed.
- when there are broken cap screw(s), stud(s), and securement bolt(s) in pipe bracket portion when necessary to remove pipe bracket from car
- when a single car air brake test fails.

(2) If a derailment occurs, maintenance inspections shall be performed in accordance with local procedures. The Installation Commander shall establish these procedures and should use CFR 49. The maintenance items shall be wheels, axles, and trucks.

(3) When personnel report a specific malfunction, the railcar shall be inspected to determine the cause of the malfunction.

e. Exercise Of Journal Bearings. The weight of a rail car is supported by eight bearings. These bearings fit between the axle ends and the truck frames and is lubricated by wick and wiping action from the journal box oil sump. If a rail car is idle for an extended period of time, the weight of the car forces out the lubricant between the bearing and axle surfaces. Dry bearings are detrimental in two ways. First, the lack of lubrication when the car is initially moved after a period of idleness causes friction damage. Second, dry bearings cause galvanic corrosion and erosion of the bearing. Activities shall have a program that ensures railcars with journal bearings are moved a minimum of five car lengths every 45 days. This program shall

also address the maintenance of car movement records to easily determine which cars have not been moved in the last 45 days, so their movement can be scheduled.

f. Decontamination. Activities that handle energetic materials have discovered contamination on the floorboards of rail cars prior to and during rail car maintenance. In addition, activities have also had serious fires in maintenance facilities because maintenance procedures ignited energetic material that was not known by the activity to be contaminating railcars. Spills of bulk or loose energetic material have caused this contamination during times when the long-term dangers posed by hazardous material contamination were not fully understood and when less emphasis was placed on prompt decontamination. As personnel retired and activities transferred railcars among themselves, the corporate memory of past spills disappeared, but the possibility of harmful contamination remaining has not disappeared. Contaminated railcars present threats to personnel and the environment. The Environmental Protection Agency (EPA) is concerned about the environmental risks associated with re-activity, ignitability, corrosivity, and toxicity; and the Naval ordnance safety community is concerned about the explosive safety risks. Checks, which can indicate the presence of energetic material, must be performed. Activities are directed to have procedures that prevent injury, damage, or environmental harm resulting from maintenance being performed on contaminated railcars.

(1) The procedures shall ensure that railcars be checked for contamination prior to maintenance. However, railcars do not have to be checked prior to routine servicing operations in which the operation is unlikely to involve contamination if it is present.

(2) These procedures must adhere to requirements of 40 Code of Federal Regulations Parts 261, 262-265, 268, and 270; EPA Publication SW-846; and all applicable state and local laws.

(3) These procedures must ensure that if testing shows that the car is contaminated with corrosive, toxic, reactive, and/or ignitable material, then:

- The railcar will be marked conspicuously to indicate that the car is contaminated with corrosive, toxic, reactive, and/or ignitable material as appropriate; and

- The Installation Commander will ensure that the car is decontaminated in accordance with applicable DoD and EPA requirements.

INTENTIONALLY LEFT BLANK

Section 6.
GUIDELINES FOR LOCAL DETERMINATIONS

1. Speed Limit Factors.

a. Speed Considerations. The Installation Commander shall consider the following when setting maximum safe operating speeds: track condition and FRA class; horizontal curvature and superelevation; sight distances to potential obstacles; sight distances to highway grade crossings; maximum train stopping distances; and railcar characteristics.

b. Additional Considerations Affecting Speed.

(1) For track maintained to FRA Class 2 standards, the maximum operating speed shall be limited to 25 mph.

(2) For any operational speed, the above factors shall be reviewed to ensure a potential accident scenario is not established. For example, if the speed is raised from 5 to 10 mph and there are whistle posts or track circuits for a highway crossing, the higher speed may not allow adequate warning to motorists approaching the crossing.

(3) As noted in Section 3.5.e, any speed limit that encourages speeds in the 13 to 20 mph ranges shall be avoided.

(4) When special service equipment that may have an unusual suspension or an unusually short wheelbase, such as a crane, is being moved, speeds shall be limited to 10 mph.

(5) High or wide loads shall be moved at walking speed, 3 to 5 mph, when approaching tight or unverified clearances.

(6) Speeds shall be reduced to maintain safe margins if visibility is reduced because of weather, light failure, or other causes.

2. Crossing Factors.

a. Crossing Considerations. To assess the status of highway rail crossings, the Installation Commander shall make an inventory of the crossings and perform a study of how to assess these crossings. Figure 6-1 shows the study positions to collect the type of information required by Forms 7 and 8 (See Appendix B).

After these initial screenings, crossings that are deficient should be reviewed for signage or other additions or changes that may enhance the safety of the crossing. See Figures 6-2 to 6-4 for examples of the type of signage changes that should be considered.

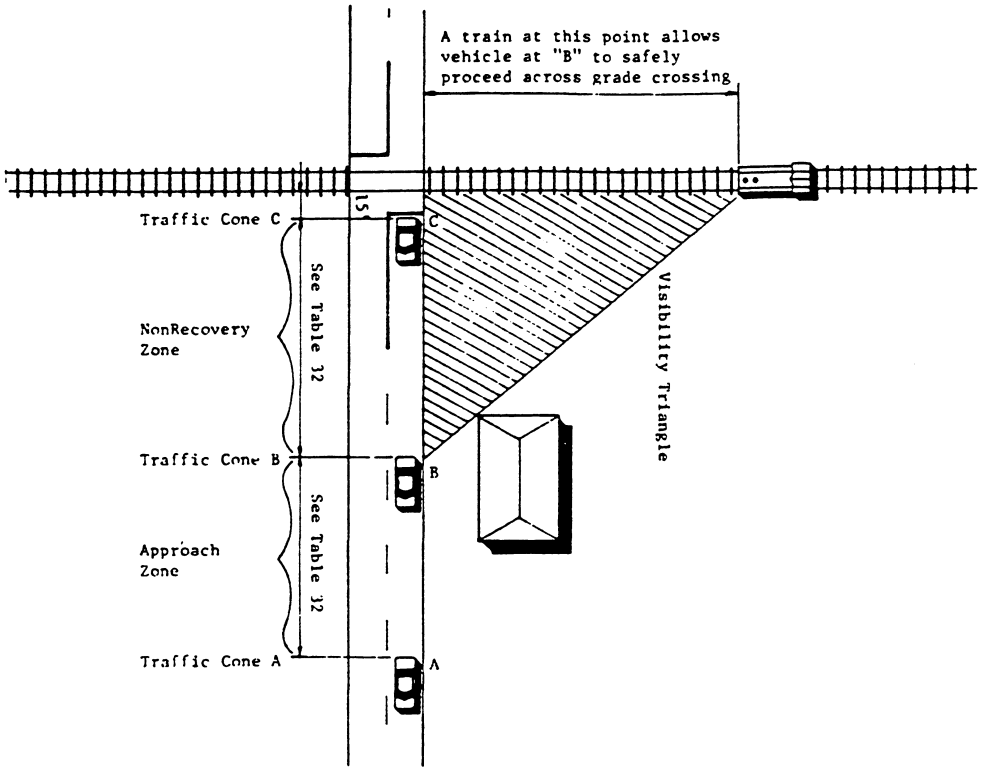

Figure 6-1. Study positions for diagnostic team.

<u>b. Additional Considerations</u>. For additional information, the following publications should be consulted:

- Railroad - Highway Grade Crossing Handbook, latest edition, FHWA-TS-86-215, available through the government printing office or call 202-366-4656.

- Manual on Uniform Traffic Control Devices, Washington, D.C.: Federal Highway Administration. See http://www.ohs.fhwa.gov/current edition. or call 202-366-4656 for information on traffic control manuals and handbooks.

- Traffic Control Devices Handbook, Washington, D.C.: Federal Highway Administration.

- Crossing information. Call the U.S. Department of Transportation Federal Railroad Administration, 202-493-6290.

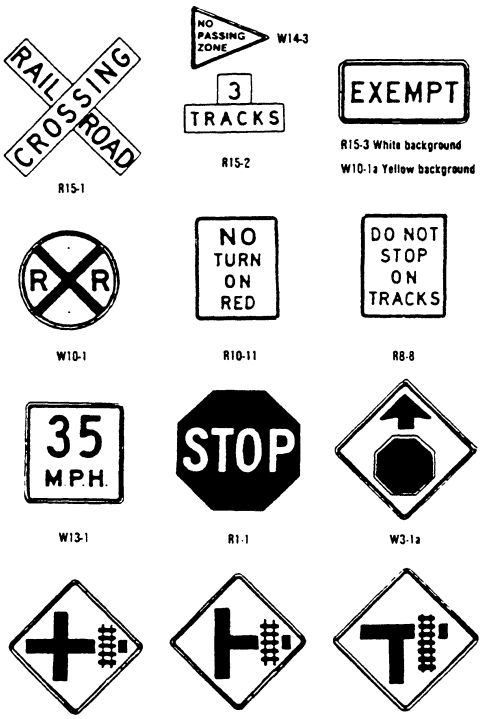

Figure 6-2. Typical crossing signs.

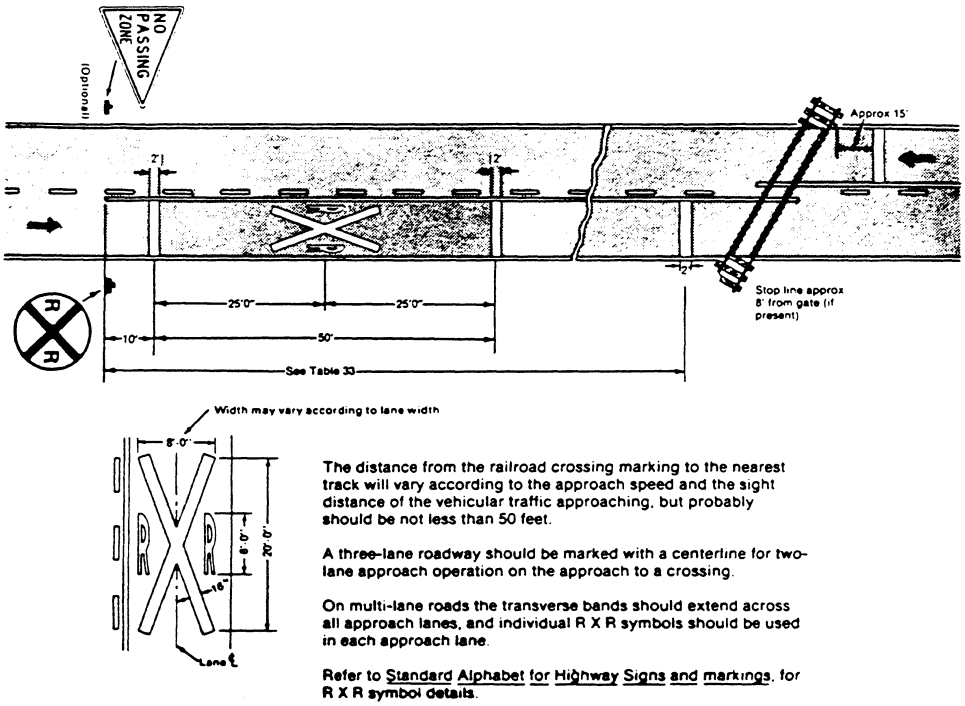

Figure 6-3. Typical placement of warning signs and pavement markings.

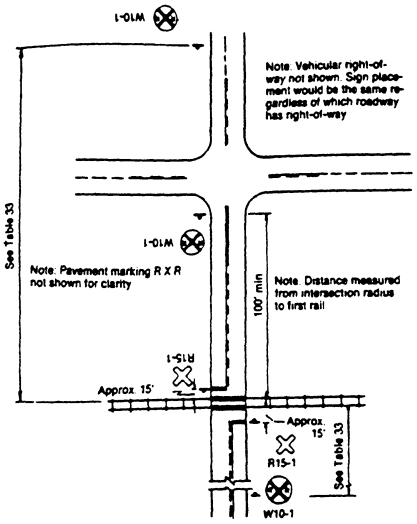

TYPICAL SIGN PLACEMENT WHERE PARALLEL ROAD IS OVER 100 FEET FROM CROSSING

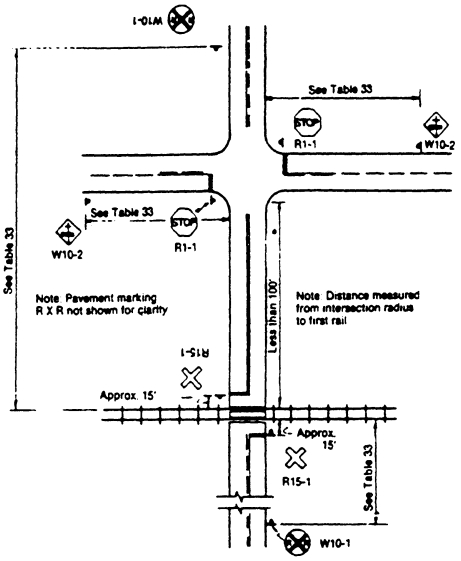

TYPICAL SIGN PLACEMENT WHERE PARALLEL ROAD IS WITHIN 100 FEET OF CROSSING AND INTERSECTING ROAD TRAFFIC MUST STOP

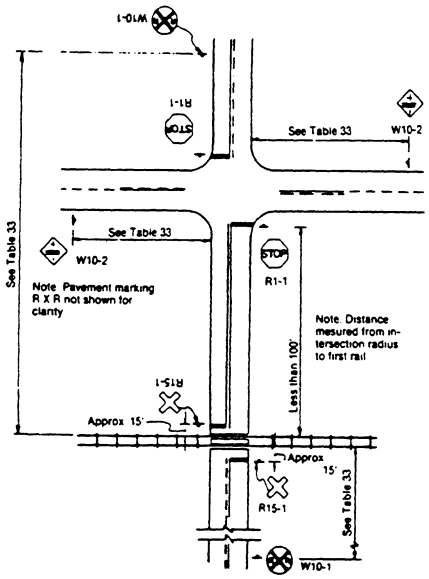

TYPICAL SIGN PLACEMENT WHERE PARALLEL ROAD WITHIN 100 FET OF CROSSING AND INTERSECTING ROAD TRAFFIC MUST STOP

Figure 6-4. Typical placement of warning signs at crossings with parallel roads.

3. Time on Duty

An employee's time on duty begins when he reports for work and ends when he is finally released from duty. Employees should have at least eight consecutive hours off duty during the preceding 24 hours. Employees who work 12 hours or more should be given at least 10 consecutive hours off duty before they are allowed to work again. Employees shall not be worked over 12 hours without approval of the transportation supervisor. Periods of less than four hours off cannot be counted towards the required off-duty time but should be counted towards time on duty.

4. Railcar Intermix.

Railcars with "Explosives hazard class 1.1 and 1.2," "Flammable," and "Poisonous Gas" placards should have at least one car between them and any occupied locomotive. Cars placarded "Explosives (hazard class 1.1 through 1.6)", "Radioactive," "Flammable," or "Poisonous Gas" should be placed in the consist so that each group is buffered from the other group by at least one car. See Department of Transportation, Bureau of Explosives 6000 for information on hazardous material load and segregation charts.

5. Commercial Access to Station.

a. Background. Commercial railroad access to Navy ordnance activities is required to drop off or pick up cars. Activities normally control access with a gate in the activity's perimeter fence that is locked when not in use. When a commercial train has to enter, activity personnel (usually security) must unlock the gate. Therefore, the activity and hence the captive railroad know that a commercial train is on the activity. The best security arrangement for commercial rail access is to have a commercial railcar holding area, called "a bullpen." The bullpen is normally a chain-link security fenced area inside the ordnance activity, which is large enough to hold a number of cars and which has a locked gate at each end. The commercial rail line has the key to the outer gate to move cars in and out. The Navy has the key to the inner gate. Bullpen holding area procedures provide excellent security and accountability for all rail cars entering and leaving the activity. This arrangement can not be implemented at all activities due to track layout and terrain. In these cases, other positive security and accountability methods must be implemented.

b. Recommendations. Installation Commanders should ensure that procedures for commercial rail access provide as much security and railcar accountability as the bullpen concept. For facilities with bullpens, Installation Commanders should ensure that the procedures for use of the bullpen are complete and address all possible situations.

INTENTIONALLY LEFT BLANK

Section 7.
GUIDELINES FOR LICENSING

1. Crew Licensing.

Engineers, conductors and braker/switchers shall be licensed to perform their functions in accordance with this manual; the NAVFAC P-300, Management of Civil Engineering Support Equipment; and local requirements. Applicable tests to be administered to the Braker/switcher, Conductors and Engineer are shown in Appendix B, Forms 9, 10 and 11. The license, NAVFAC Form 11260/2, Construction Equipment Operator License, shall specify the job(s) for which the license has been issued, e.g. engineer, conductor, braker/switcher.

2. Qualification and Certification Requirements for Train Crews to Handle Ammunition and Explosives (A&E)

a. Background. Requirements for the operation of trains hauling A&E are more stringent than the requirements for the operation of non-explosively laden trains. Mishaps involving A&E have a high potential of causing loss of life, capability and operational readiness, personnel injury, and property damage. Past investigations of explosive mishaps show that many are caused by personnel errors such as failure to follow well established safety procedures, improper handling and inadequate supervision. To reduce the probability of an explosive mishap involving explosively laden trains, the potential for personnel errors shall be controlled through written procedures and training (qualification), coupled with a management process designed to prevent inadequately trained personnel from performing A&E jobs or tasks (certification).

b. License Requirements for Personnel Handling A&E. Management will develop and follow a Standard Operating Procedure in accordance with NAVSEA 8023.11, Standard Operating Procedure for Processing of Expendable Ordnance at Naval Activities, which governs the handling of A&E by rail. For crews that operate explosively laden trains, management shall incorporate the following requirements into their local A&E handlers qualification and certification instructions in accordance with OPNAVINST 8023.2C, US Navy Explosive Safety Policies, Requirements and Procedures:

(1) Engineers, conductors and braker-switchers shall pass the medical examination as specified in Article 15-71B of the NAVMED P-117 series.

(2) Engineers, conductors, braker-switchers, and dispatchers shall be certified to handle explosives in accordance with the provisions of the OPNAVINST 8023.2C series.

(3) Engineers, conductors, braker-switchers, dispatchers, and train inspectors shall have the courses specified in the applicable Appendix D of the NAVSEA OP 5 series or its successors.

INTENTIONALLY LEFT BLANK

Section 8
RAILWAY SAFETY REQUIREMENTS

1. Safety Background.

The mission of the safety department at a naval activity is to assist the Installation Commander in ensuring all railroad operations of the activity are conducted in a safe manner to help prevent loss of life; to reduce the number and severity of injuries, property damage; and to maintain effective operations. This mission extends to the captive railroad fleet and commercial cars while on station. All Installation Commanders shall ensure that personnel in charge of any phases dealing with the railroad shall consult with the safety department before making decisions that may affect the safety of rail operations. Each safety department shall have a person appointed on orders as a railroad safety manager. This manager will be the railroad safety technical authority for station railroad safety issues. Installation Commanders may assign additional personnel to railroad safety when the risk of operating a railroad warrants additional augmentation. This risk assessment should address factors such as the number of accidents, incidents, near misses; the type of material being hauled; the condition of the rails; distances covered; mechanical condition of the equipment; and frequency of use. The safety department shall have a working knowledge of day-to-day railroad operations and provide safety guidance when needed. The safety department shall be immediately notified when an incident, near miss or emergency occurs. The Installation Commander shall ensure the involvement of the safety department with all aspects of the railroad to help prevent emergencies and to detect and eliminate unsafe trends and hazards.

2. Safety Requirements.

Installation Commanders shall develop plans to ensure safety department involvement in captive railroad operations. These plans should be included in the local railroad operating directive which governs the operation of the railroad. Installation Commanders shall ensure their plans address the following areas as a minimum:

a. Safety Inspections. Random inspections of all railroad operations should be conducted at least monthly. They may be conducted by safety department personnel and/or the rail supervisor to ensure adherence to safety precepts. The safety department shall conduct inspections at least quarterly.

b. Safety Documentation. All types of railroad safety inspections shall be documented and reviewed by the safety department. All inspections must be kept on file for a minimum of five years in accordance with OPNAVINST 5100.23 series and maintained in a central location for review by future inspectors.

c. Safety Analyses. Installation Commanders shall require analyses of these reports to determine when trends and patterns develop with safety implications that need to be addressed by the adoption of new safety policy.

d. Safety Consultation. Installation Commanders shall require that railroad personnel consult with the safety department before issuing new policy or changing existing policy in railroad matters. This requirement will provide the safety department with some knowledge of railroad activities and the opportunity to recommend changes if safety is adversely affected.

e. Safety Oversight. Installation Commanders shall appoint a railroad safety manager on orders, or designate them by letter or job description to have oversight of the railroad safety program.

f. Local Railroad Operating Directive. Installations shall have a local railroad operating directive document (standard operating procedure, railroad manual, activity instruction, etc.) which establishes procedures for every aspect of the railroad operation. Installation Commanders shall require the safety department to review this governing document before publication and before changes are made. This requirement will ensure that the Safety Department can determine if safety will be adversely affected by changes in railroad operations.

3. Local Railroad Operating Directive.

A local railroad operating directive such as standard operating procedure, railroad manual, activity instruction, etc., is vital to the safe, effective, and efficient operation of a railroad.

a. Contents of Local Railroad Operating Directive. Installation Commanders shall:

(1) Ensure that the local railroad operating directive implements all the requirements of this publication; other pertinent directives and instructions, and the following, if applicable: Navy MO-103, NAVFACINST 11230.1 Series, NAVSEA OP 5, Vol. 1, NAVSEA SW023-AG-WHM-010.

(2) Ensure that the local railroad operating directive addresses the special situations unique to the installation.

(3) Ensure that the local railroad operating directive establishes a hazard notification system (See paragraph 4 of this section).

(4) Ensure that the local railroad operating directive establishes a program for refresher training.

(5) Ensure that the local railroad operating directive establishes procedures for conducting standup safety briefings.

b. Special Situations. Some of the possible special situations are discussed below:

(1) Downsizing. Downsizing may directly affect railroad operations. Personnel with no railroad experience may be assigned to work on the railroad as part of an ongoing training program. Downsizing may also affect the railroad indirectly such as loss of personnel in the safety department, facilities, fire station, etc. The Installation Commander is still responsible for ensuring a safe railroad during and after downsizing.

(2) Reserve Augmentation. Some activities use reservists to augment the railroad. This program of reserve augmentation benefits both the activity (it gets additional personnel) and the reservists (they get valuable hands-on training). However, Installation Commanders shall actively manage the program to ensure that reservists can provide support without creating safety concerns. Examples include: developing and documenting an on-the-job training program for each of the specialties in which the reservists work; not allowing reservists to perform a particular task without proper supervision until they have demonstrated competency; ensuring that reservists have the proper certification and licensing; maintaining informal records of their tours and performance so that additional training, if needed, can be provided during their next tour of duty; etc.

(3) New or Changing Missions. Installation Commanders shall conduct an analysis of how any mission or mission changes will affect the railroad prior to assumption of the new mission. Changes in railroad operations, equipment, and facilities shall be made when the analysis shows that safety has been negatively affected.

(4) Reorganizations. Reorganizations have occurred at some activities. Railroad operations may have been retained by the activity, but track maintenance and locomotive/railcar maintenance have been moved to other organizations resulting in the creation of new lines of management authority and responsibility. New lines of authority and responsibility make the railroad difficult to manage as a system, and loss of control is possible. Installation Commanders shall remain constantly alert to keep communications from becoming confused or non-existent. Installation Commanders shall ensure that organizations, responsible for different aspects of the railroad, have well defined processes for communicating with each other. Installation Commanders shall also ensure each organization thoroughly understands each process. Examples of these processes include but are not limited to: requests for locomotive, railcar, and track maintenance; notification of out of service track; notification of times and locations for track maintenance; requests for railcar spotting; mishap reporting, etc.

(5) Contracting. In some cases, the railroad operation or one or more of its aspects (track repair, locomotive or car repair, etc.) are contracted to a commercial concern. Installation Commanders or those responsible for contracting out railroad operations shall ensure that safety is a part of the contract and that communications among and between the railroad operators, the users of the railroad, and other installation personnel who interface with the railroad remain open.

c. Association of American Railroads. Installations, in recognizing the importance of their local railroad operating directives, have sometimes based them on the "The Standard Code of Operating Rules" published by the Association of American Railroads. This manual is an excellent source of information because it contains the collective wisdom and experience of the commercial rail industry operating in the private sector. Many activities in writing their railroad operations manual have quoted the rule designation (letter or number) instead of the actual rule. Frequently, the original rules have been forgotten; and no one remembers the rules for which the designations stood. Installation Commanders are encouraged to use the "The Standard Code of Operating Rules" in writing their local railroad operating directive and shall quote the rule instead of the number/letter designation.

d. Training. Installation Commanders shall ensure that all railroad operating personnel are thoroughly trained and familiar with the contents of the local railroad operating directive. This training shall be documented to show the subject, material covered, type of training (classroom, correspondence, manual review, video, etc.), the instructor, date of training, results of tests and trainee's signature.

e. Annual Reviews of Local Railroad Operating Directive. Installation Commanders shall ensure that the local railroad operating directive is reviewed annually. Installation Commanders shall prepare a letter stating who reviewed the directive, when the review was conducted, and whether changes were made. This letter shall be maintained until the next review. The focus of the review is to ensure that the document properly addresses changes in railroad operating policy that must be made to safely accommodate changes in the installation's way of doing business. All new Installation Commanders shall review this document within 90 days of assuming command.

4. Hazard Notification System.

a. General. Track conditions can change over a period of time. Examples include but are not limited to out-of-service track, defective track, hazards, completion of track repairs, and changes in speed limits. These conditions require train crews to modify their actions and the way they handle their trains. Relying solely on passing this kind of information informally by word of mouth does not ensure that all train crews will be notified and can lead to controversy and confusion over what was actually said.

b. Requirements. Installation Commanders shall establish a system to ensure the daily dissemination of key information. The system also needs to require written acknowledgment by all rail personnel that they have read the key information. The system needs to cover personnel who have been on leave for a period of time. Records resulting from this hazard notification system shall be maintained for at least 12 months. Appendix B contains Form 2, **TRAIN CREW NOTICE**, and Form 3, **TRAIN CREW ACKNOWLEDGEMENT SHEET,** which provides a means to implement the hazard notification system. An effective and efficient system to record rail crew acknowledgment of items on the hazard notification list is to use an electronic print board to list hazards such as changing track conditions, out of service track, slow orders, and other safety related information. Personnel are required to sign the board, thereby acknowledging they understand the hazards. Printing the board after the crews have signed provides a convenient way to maintain a permanent record of the key information and the personnel who read it. The printed record also provides a record to be read and acknowledged by those returning from an absence.

5. REFRESHER TRAINING.

a. General. Refresher training is important for continued success in any discipline or skill. In railroad operations, training is vital to ensure that safety is achieved. Small points can easily be forgotten, and small points are frequently the difference between safe railroading and disaster. Maintaining a catalogue of refresher training courses is a convenient way to ensure that refresher training is accomplished.

b. Requirements. Installation Commanders shall:

(1) Review all aspects of railroad operations to determine which skills are critical/hazardous. Examples are skills such as signaling, coupling, switching, radio procedures, mounting/dismounting, etc.

(2) Develop a list of the requirements necessary to safely perform each critical skill.

(3) Develop lesson plans for each course to maintain proficiency in the necessary skills.

(4) Develop a training schedule covering all refresher training.

(5) After training has been completed, document the training to show the subject, material covered, type of training (classroom, correspondence, manual review, video, etc.), the instructor, date of training, results of tests and trainee's signature.) Stand-up safety briefings are one place where the training can be accomplished.

6. STANDUP SAFETY BRIEFINGS.

a. General. Standup safety briefings are valuable for three reasons:

(1) They provide an excellent means to pass safety related information to railroad personnel. They also provide an excellent means to inform operating personnel about new hazards (track washouts, malfunctioning switches, restricted track, etc.). Frequently, face-to-face meetings provide the most effective means to explain hazardous situations that exist.

(2) Standup safety briefings in which all participate produce synergism resulting in everyone learning from everyone else.

(3) Standup safety briefings provide an excellent means to keep railroad personnel sensitized to safety concerns because railroad operating personnel see firsthand that safety is important to middle and upper management.

b. Requirement. Installation Commanders shall establish requirements for standup safety briefings (maximum of two weeks between briefings). Installation Commanders shall require all railroads operating personnel to attend and to acknowledge that they understand the hazards discussed in standup safety briefings. This acknowledgment can take the form of an initial or signature on the briefing agenda. Personnel who return to work after a leave period should be required to initial the briefing agenda(s), regarding the hazards discussed at briefings during the leave period. The discussion of hazards during a stand-up safety briefing does not eliminate the requirement to establish a hazard notification system discussed below. Standup safety briefings provide an excellent forum for the conduct of refresher training as discussed above.

INTENTIONALLY LEFT BLANK

APPENDIX A

LOCOMOTIVE AND RAILCAR INSPECTION AND MAINTENANCE REQUIRMENTS

1. Brake Systems and Components.

- All railcars cars in the shop for which there is a reason to believe the brakes may be defective, i.e., built-up tread, flat spots, signs of overheating, failure of set and release test, etc., should have a single car air brake test.

- Before a railcar is released from a shop or repair track, it shall be determined that the brake pipe is securely clamped, angle cocks in proper position with suitable clearance, valves, reservoirs and cylinders tight on supports, and supports securely attached to car.

- Old stencil dates for COT&S shall not be changed until the work is completed.

- All rubber parts shall be replaced during COT&S on all types of brake valves.

- Air hose gaskets shall be renewed during COT&S.

- Periodic inspection of the brake system shall include air brake hoses. Any hose over eight years old or date obliterated shall be renewed. Age is determined by the date molded on the hose.

- Air brake hoses with holes or cuts through the fabric in the outer covering, longitudinal or spiral cracks that expose the fabric, or heat damaged hoses or permanently twisted, kinked, crushed or flattened or damaged wire reinforced hoses shall be replaced.

- Brake beam hangers worn to 3/4 inches or less, measured vertically or through the comers of the radius shall be repaired or replaced. See Figure A-1 for examples of brake beam hangers.

- Brake beam hanger brackets broken, bent, or worn oblong to a depth of 1/2 its original diameter, or worn oblong so that remaining material is less than 60% of the original section shall be repaired or replaced.

- Brake connection pins, hanger pins, or bolts shall be replaced if an original 1 inch diameter is less than 7/8 inch. If the original diameter of pins or bolts was greater than 1 inch and has worn to less than 1 inch, the pins or bolts shall be replaced.

- Brake levers, guides and brake connection rods that are bent, cracked, or with holes worn 20% or more of the original section shall be replaced.

- Brake shoes that are missing, broken, or worn to less than 1/2 inch for cast iron shoes, or 3/8 inch for composition shoes, shall be replaced.

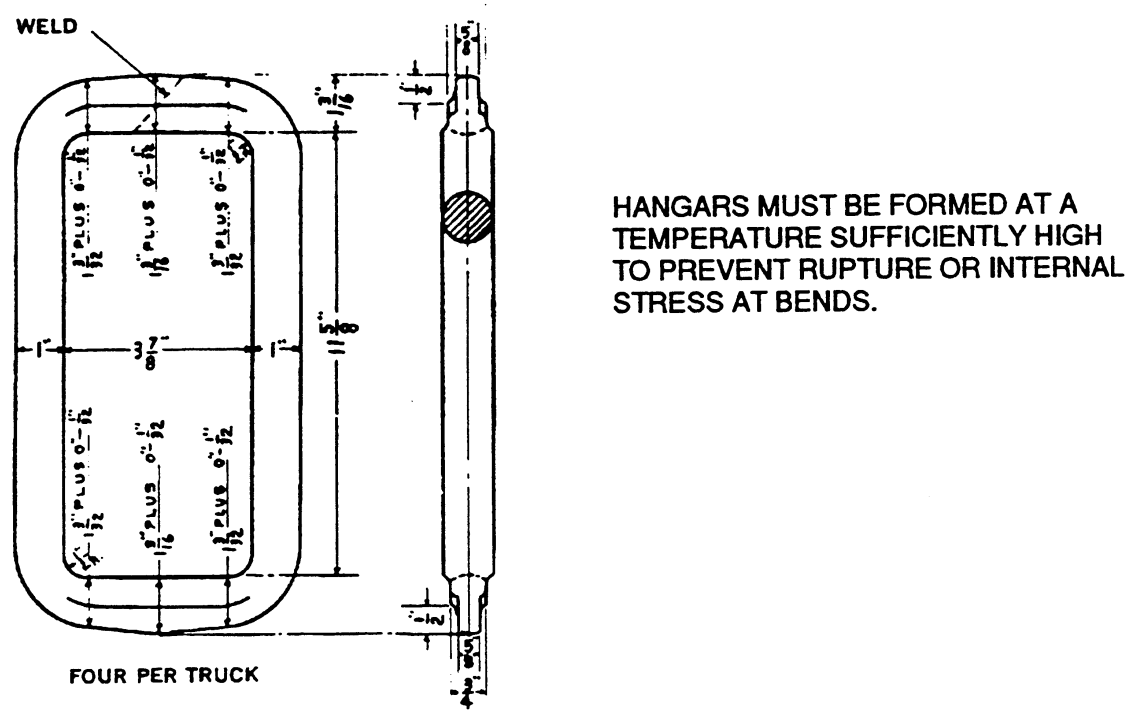

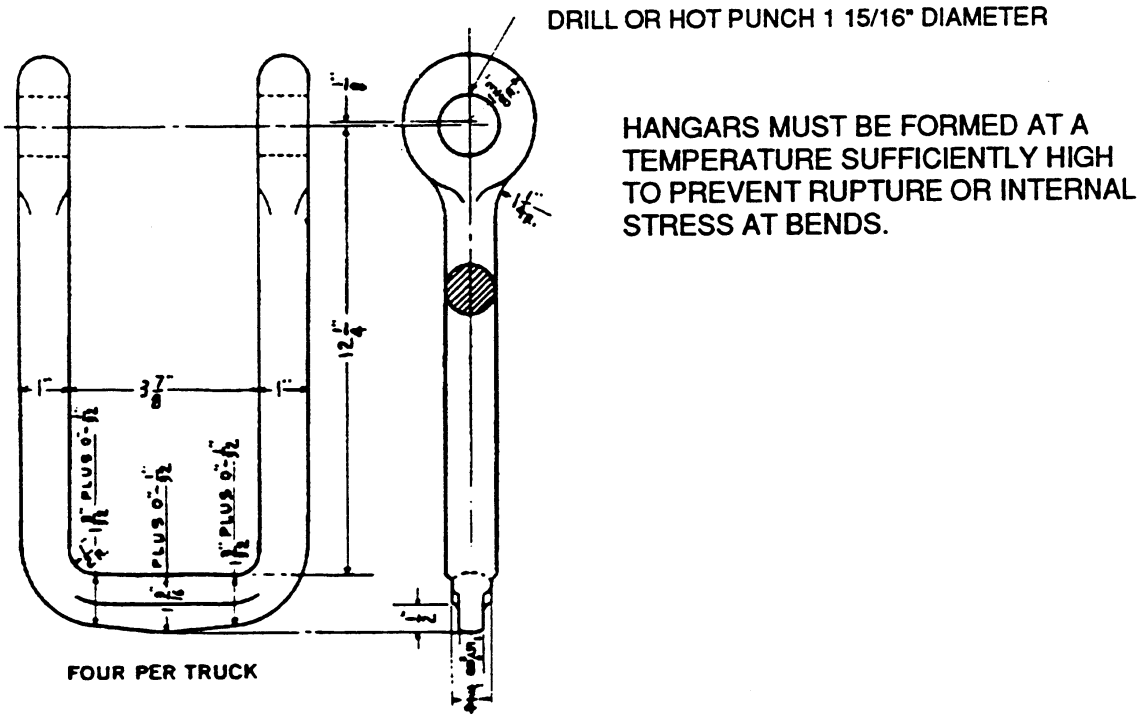

Figure A-1. Examples of brake beam hangers.

- All cars shall be stenciled for the type of brake shoe that the car requires.

- Brake shoes that do not fit a brake head shall not be forced. Brake heads are usually designed to reject inappropriate shoes. Do not intermix composition and cast iron brake shoes on the same car.

- Inoperative hand brakes shall be repaired or replaced.

- Cars utilized for the movement of Class 1 explosives should be equipped with composition brake shoes.

- Air and hand brake system components not listed above that are bent, broken, or missing shall be repaired or replaced to restore the brake system to its intended performance characteristics.

- No welding or brazing should be done on mechanical parts of geared hand brakes, or any brake shafts or wheels.

- Brake beam tension rods cut or worn 5/16 inch or more below the original diameter shall be replaced.

- Center or upper hanger opening worn so that opening measured vertically at hanger bearing is 1 1/2 inches or more shall be replaced. See Figure A-2 for an illustration of a center hanger opening.

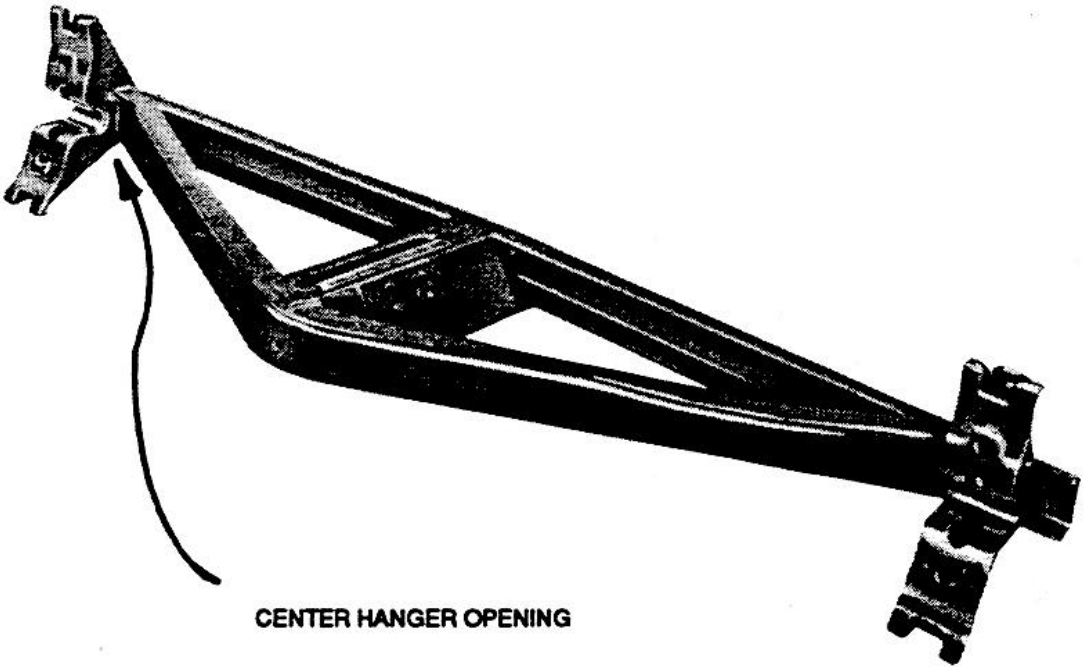

Figure A-2. Example of a center hanger opening.

- When brake head dimensions have varied to the extent that the brake head no longer provides full contact of the brake shoe with the wheel, the brake head shall be repaired or replaced.

- Welding of cracks or fractures or building up shall not be permitted on brake beam tension members.

- Railcar brake piston travel shall not be less than 5 inches or more than 9 inches. Before adjusting piston travel or working on brake rigging, the cutout cock in the brake pipe branch shall be closed and air reservoirs shall be drained. When cutout cocks are provided in brake cylinder pipes, only the cutout cocks shall be closed and air reservoirs need not be drained. Lockout procedures shall be be used in accordance with the manufacturer's recommendations.

2. Friction (Plain) Bearings.

a. Defective Journal lubrication system. A railcar shall not be placed in, or continue in service, if the car has a plain bearing box with a lubricating pad that:

(1) Has a tear extending half the length or width of the pad, or more.

(2) Shows evidence of having been scorched, burned, or glazed.

(3) Contains decaying or deteriorated fabric that impairs proper lubrication of the pad.

(4) Has an exposed center core (except by design).

(5) Has metal parts contacting the journal.

(6) Is missing.

(7) Is not in contact with the journal.

(8) Is contaminated because the journal has been contaminated.

(9) Has been submerged in any fluid or powdery substance.

NOTE: Friction-bearing lubricators shall be renewed if any of the above conditions exist or at least every 36 months.

b. Defective plain bearing. Journal bearings are defective and shall be replaced if they:

(1) Are missing, cracked, or broken.

(2) Have loose liners or a broken-out piece.

(3) Show signs of having been overheated, as evidenced by: melted babbitt, smoking from hot oil, or journal surface damage.

(4) Have a broken back or lug.

(5) Are worn 1/4 inch or more lengthwise at either end.

(6) Have a combined wear lengthwise of 3/8 inch or more.

(7) Have a lug worn to depth of 1/8 inch or more in area which is over 50% of contact face.

(8) Have combined wear, on both sides of lug extension is 1/4 inch or more at any location.

(9) Have a lug worn through to brass at any location 3/8 inch or more above the lower edge of brass side walls.

c. Defective plain bearing wedge. See Figure A- 3 for an illustration of a plain bearing wedge. Plain bearing wedges are defective and shall be replaced if they:

(1) Are missing, cracked, broken, or bent.

(2) Are not located in their design positions.

(3) Overall length measured at contact surfaces is reduced more than 3/16 inch.

(4) Have bottom surfaces which are uneven to the extent of 1/64 inch as determined by a straight edge.

(5) Are flat on top per the following table:

Nominal Journal Size	Wear Limit Flat Lengthwise
4 1/4 x 8 inches	3 1/4 inches
5 x9 inches	4 inches
5 1/2x 10 inches	4 1/2 inches
6 x11 inches	5 inches
6 1/2 x 12 inches	5 1/2 inches

d. Defective plain bearing box. Plain bearing boxes are defective and shall be repaired or replaced as needed if they :

(1) Do not maintain free oil.

(2) Have a box lid that is missing, broken, or open except to receive servicing.

(3) Contain foreign matter, such as dirt, sand, or coal dust, that can reasonably be expected to:

- Show signs of damaging the bearing.
- Have a detrimental effect on the lubrication of the journal and the bearings.

(4) Have worn, loose, broken or bent lid stops.

(5) Have lid seals that are torn or worn.

(6) Have been removed from the truck.

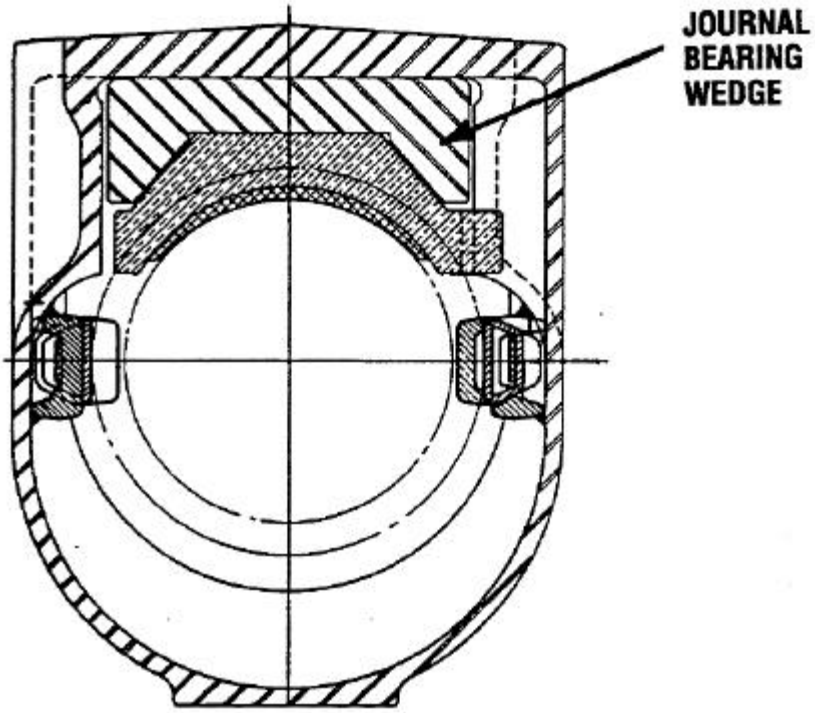

Figure A-3. Example of a journal bearing wedge.

3. Roller Bearings.

- Roller bearings equipped with a lubricant fitting with end caps that rotate shall be grease lubricated every 144 months (12 years).

- Roller bearings equipped with a lubricant fitting with housing covers that do not rotate shall be grease lubricated every 18 months.

- Roller bearings with no grease fittings shall not be lubricated. Plastic or metal plugs on the end cap should not be removed.

- Any roller bearings involved in a derailment shall be replaced if an inspection finds defects. This inspection shall include checking the following: the outer cup and end caps for cracks or breaks, seals, end cap screws or back rings that are loose, damaged, or missing and for internal roughness or catches in the rotation of the bearing. Lateral movement of the bearing shall be limited to 1/8 inch for cylindrical bearings and 1/16 inch for tapered bearings. Any visible movement vertically shall be considered a defect.

- Cars utilized for the movement of Class 1 explosives should be equipped with roller bearings.

- Any roller bearings that have been submerged in any fluid or powdery substance shall be replaced.

- Any roller bearing found with any external parts visibly cracked broken or bent or any of the defects noted in derailment inspection replacement criteria shall be replaced.

- Bearings shall be replaced in pairs.

- Cracked, broken, or missing roller bearing adapters shall be replaced. Roller bearing adapters shall be replaced if roller bearings have wear on either end of the bearing outer ring.

- When wheel sets are removed, the adaptor shall be checked with an adapter wear gauge. See Figure A-4 for an illustration and cross section of a bearing adapter.

- If the crown on top of the adapter has worn to such a condition that frames would bear on relief portions, adapters should be renewed.

4. Wheels.

See Figures 3-6 through 3-7 and Figure A-5 for illustrations of some defects discussed below. See Figures A-6 through A-15 for methods of utilizing AAR wheel gauges. Wheel sets shall be checked for equal back-to-back measurements at three locations approximately 120 degrees apart. Wheel sets shall be replaced if the distance between the inside gauge of the flanges on narrow flange wheels is less than 53 inches or more than 53 1/2 inches. The distance between the inside gauge of the flanges on wide flange wheels shall not be less than 53 inches or more than 53 1/4 inches. Wheels shall be replaced if any of the following situations exist:

- Thin flange, 15/16 inch thick or less, at a point 3/8 inch above the tread of the wheel.

- Flange height extending 1 1/2 inches or more above the approximate centerline of, tread or vertical flange surface extending 1 inch or more from the tread.

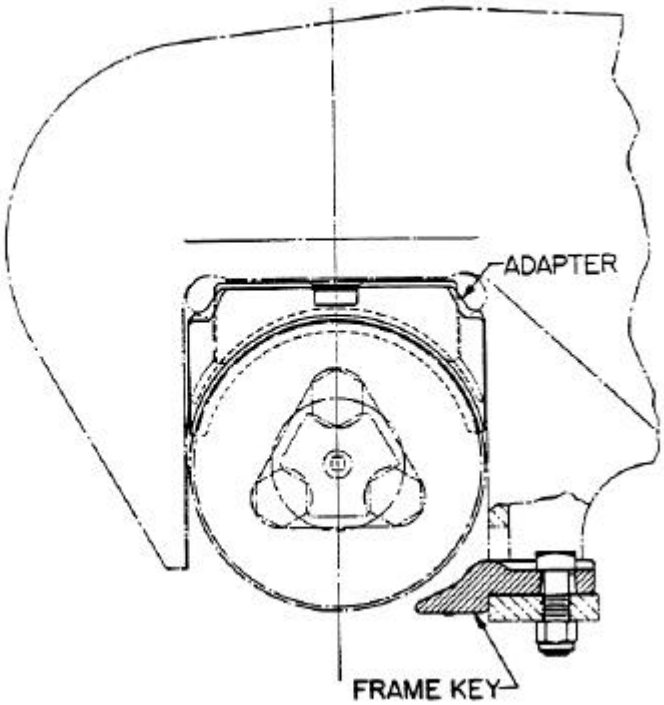

Figure A-4. Illustration and cross section of a bearing adapter.

- Flanges are defective if they have chips that are 1.5 inches long or longer or .5 inch wide or wider.

- If the chips are broken from uniform curling over the outer edge of the rim around the entire wheel, the flange is not considered a defect.

- Thin rims of 3/4 inch or less.

- Shelling or spalling 3/4 inch in length and in width or larger. Built-up metal on the wheel 1/8 inch or higher than the wheel tread.

- Grooved tread 1/8 inch or deeper.

- Thermal cracks: transverse cracks in tread, flange or plate of any length. Brake shoe heating frequently produces a fine network of superficial lines or checks running in all directions on the surface of the wheel tread. This is sometimes associated with small skid burns and should not be confused with true thermal cracking and is not a cause for wheel removal.

- Cracked or broken plate.

- Holes in plate: drilled, burned with torch or electric arc.

- Scrape, dent, or gouge anywhere in the wheel surface more than 1/8 inch deep.

- Slid flat spots 2 inches or more in length, or 2 or more 1 1/2 inches or more in length.

- Mate to any wheel changed because of flat spot, i.e., replace wheels in pairs.

- A wheel on the car showing evidence of being loose, such as oil seepage on the back hub or back plate.

- A wheel on the car shows signs of having been overheated and is evidenced by a reddish brown discoloration, to a substantially equal extent of both the front and the back face of the rim, that extends on either face more than 4 inches into the plate area measured from the inner edge of the front or back face of the rim.

- A wheel on the car has been welded unless the car is being moved for repair and has been approved for such movement.

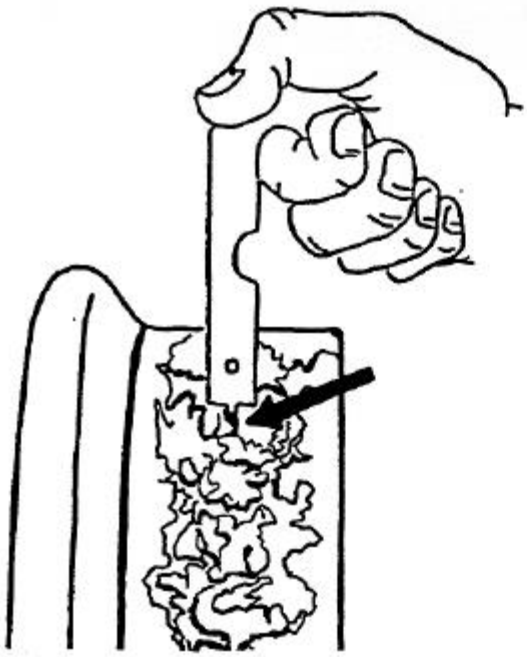

Built-up Tread. A wheel is condemnable whenever the tread has built up metal one-eighth inch or higher than the wheel tread.

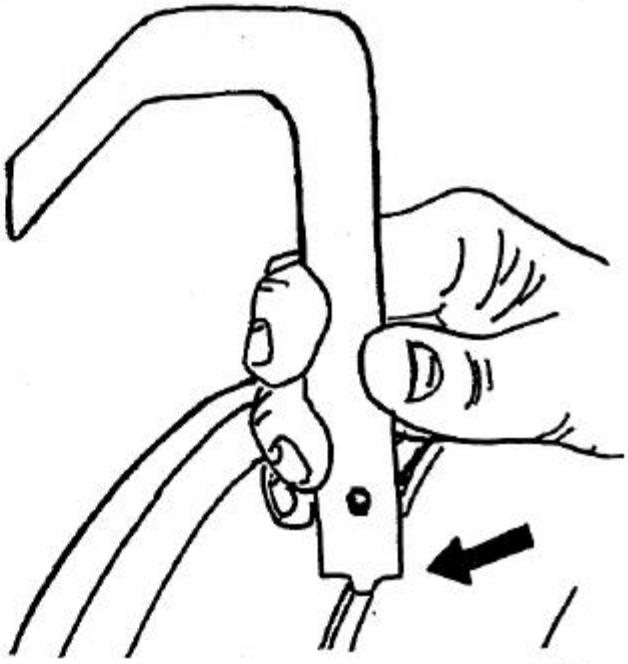

Grooved Tread. A wheel is condemnable whenever it has one or more grooves worn to a depth of one-eighth inch or more.

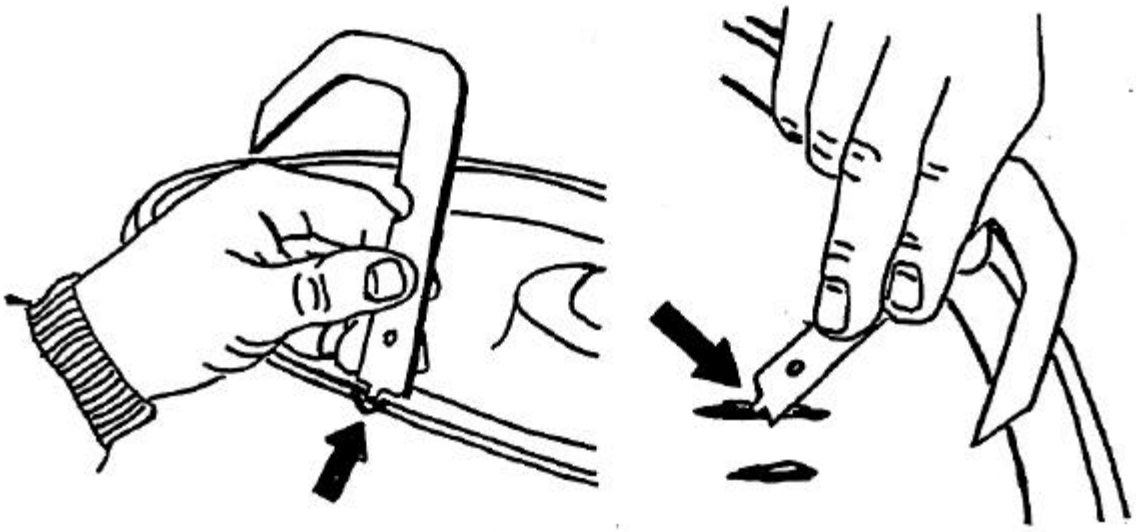

Figure A-5. Gauging defective wheels.

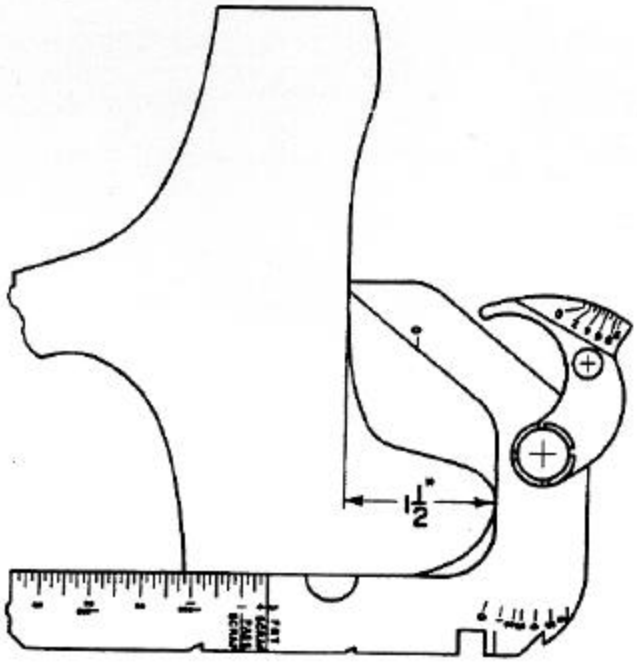

Figure A-6. Method of gauging flange height.

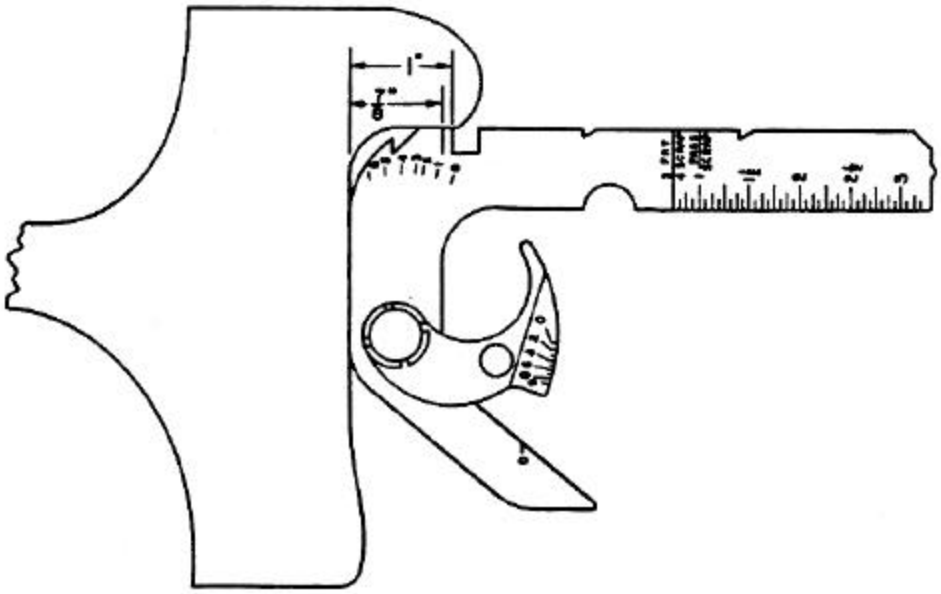

Figure A-7. Method of gauging vertical flanges.

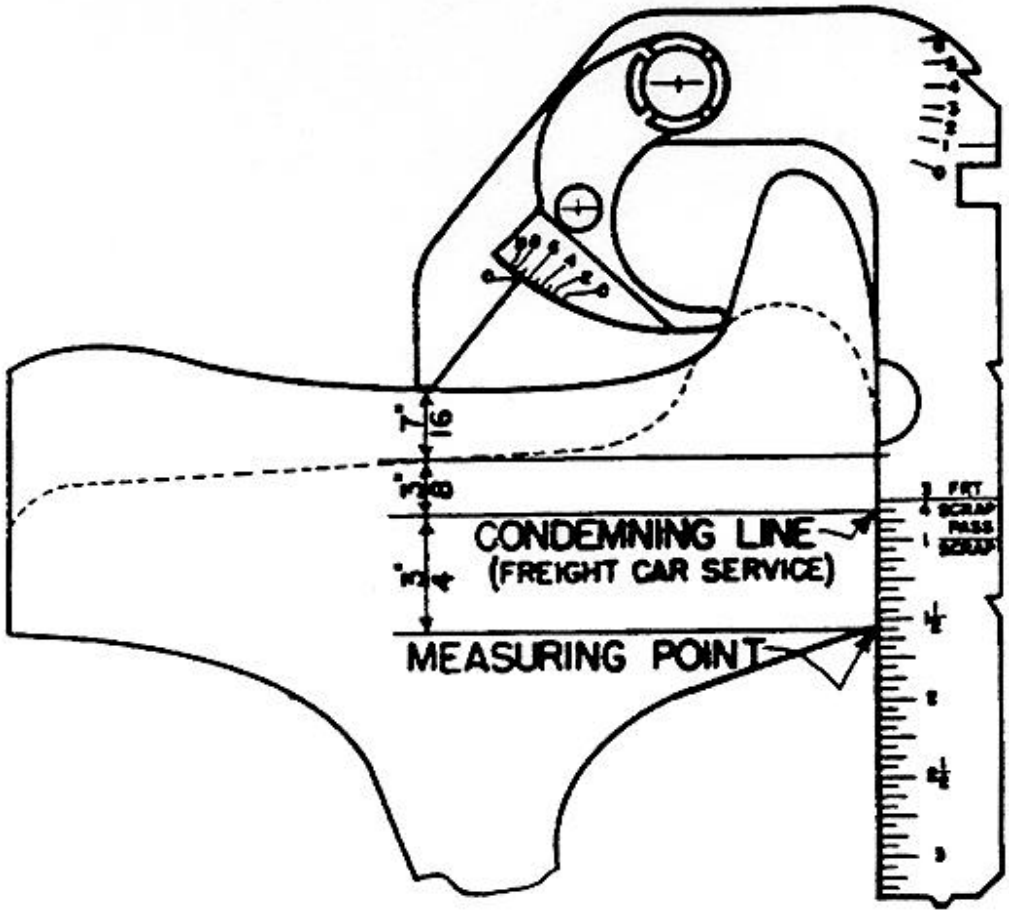

Figure A-8. Method of gauging worn flange wheel.

The pointer indicates amount of metal in sixteenths of an inch to be turned off tread to restore full flange contour with a witness groove. The side scale shows amount of metal on tread above measuring line before turning. In this illustration, 7/16 must be turned off tread to restore full flange contour. The amount of service metal available after turning is 6/16 inch.

The gauge may be equipped with one or both of two movable fingers having different calibrations. A finger marked “NF” or a finger having no identifying marking is used for gauging flanges of steel wheels used on freight cars, passenger cars and locomotives. The “WF” finger may be used when restoring wide flange contour to wheels.

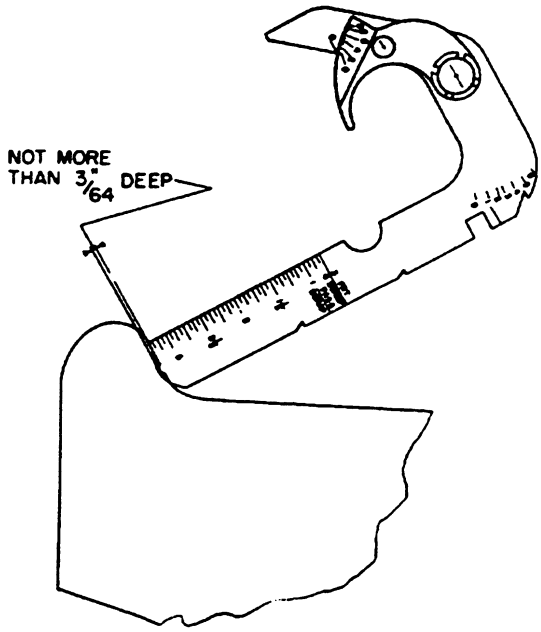

Figure A-9. Method of gauging depth of witness groove in flange.

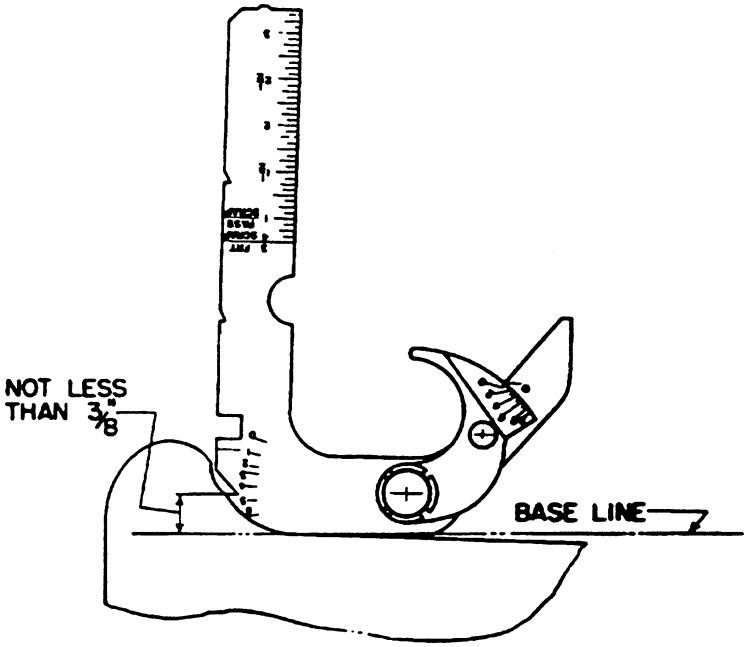

Figure A-10. Method of gauging location of witness groove in flange.

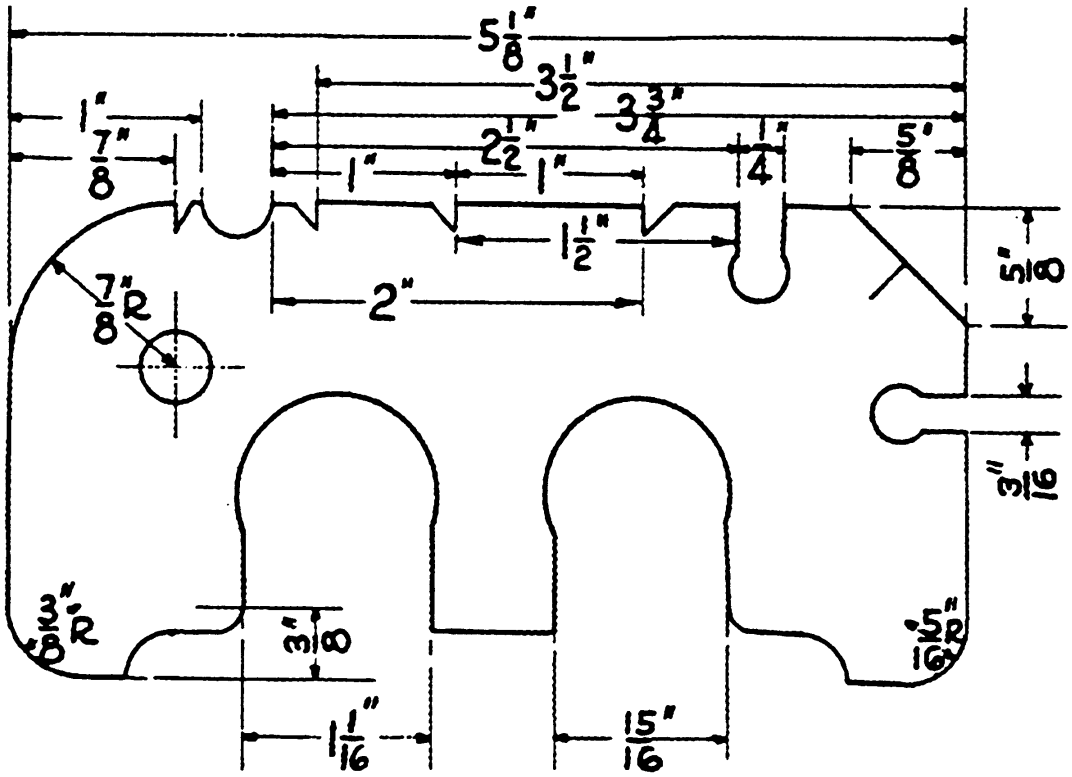

Figure A-11. Example of a wheel defect, worn coupler limit, Worn journal coupler, and journal fillet gauge.

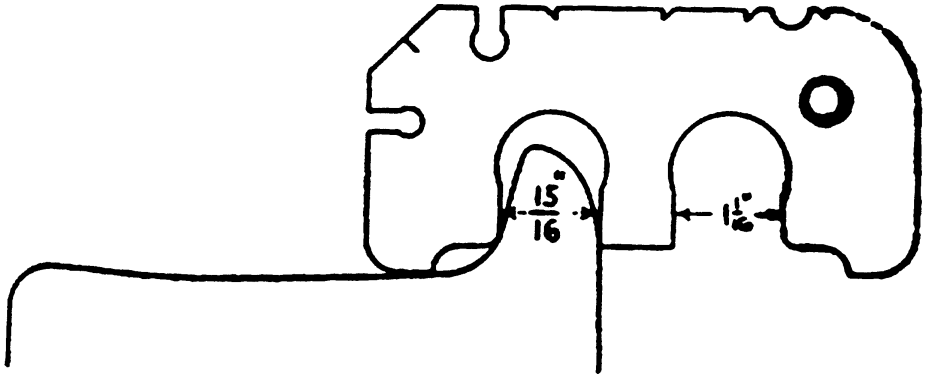

Figure A-12. Method of gauging thin flanges.

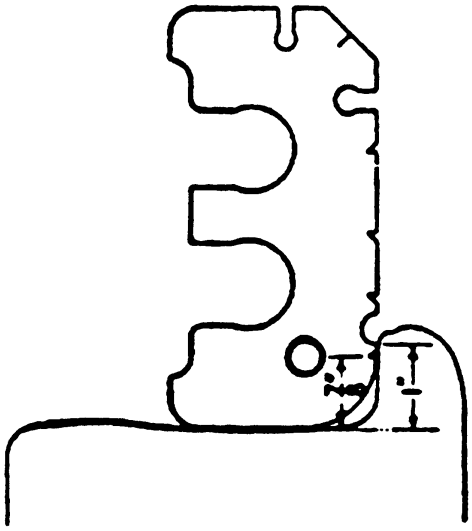

Figure A-13. Method of gauging vertical flanges.

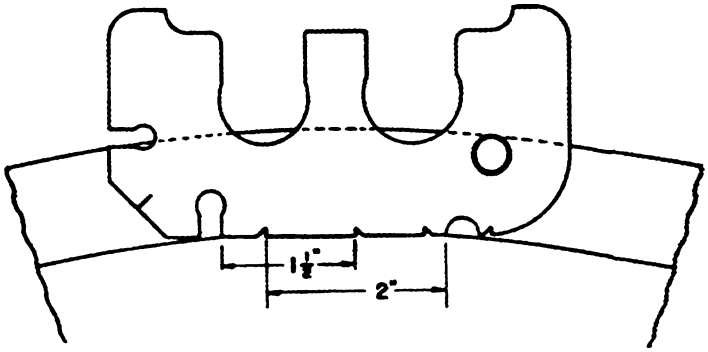

Figure A-14. Method of gauging flat spots.

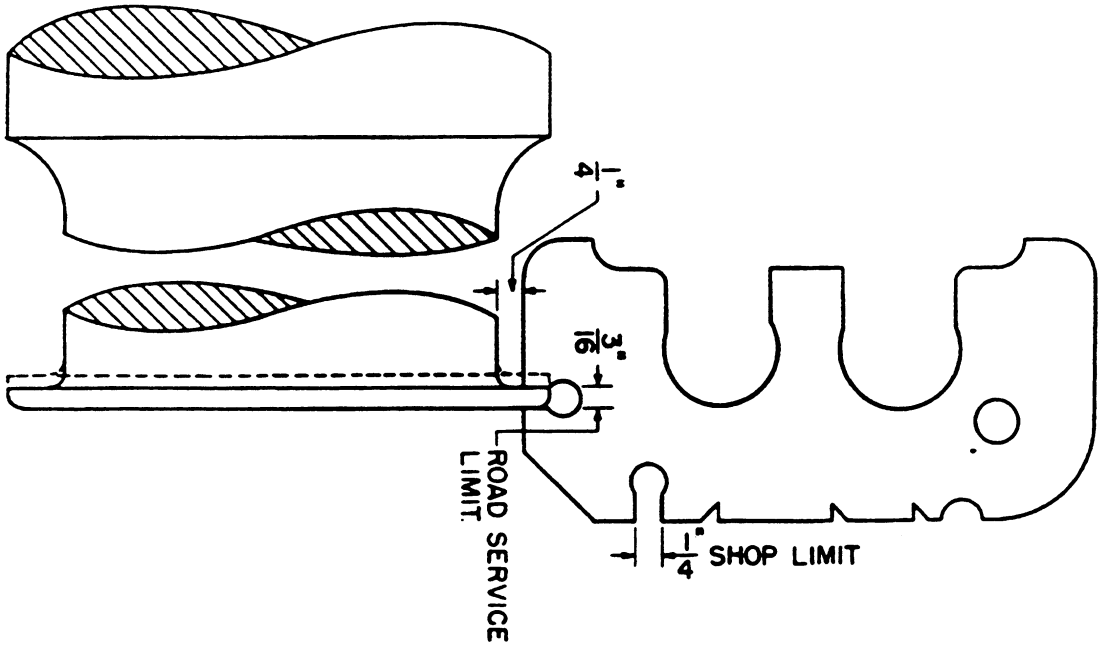

Figure A-15. Method of gauging end collar thickness.

5. **Axles**. A railcar shall not be placed in or continue in service if:

- An axle has a crack or is broken.
- An axle has a gouge in the surface that is between the wheel seats or more than 1/8 inch in depth.
- A journal shows evidence of a fused bearing or overheating, as evidenced by a pronounced blue-black discoloration.
- The surface of the plain bearing journal on the axle, or the fillet on the axle, has a ridge, a depression, a circumferential score, a corrugation, a scratch, a continuous streak, broken collar, seaminess (ridge around the axle), rough inside end collar, or cuts pitting, rust, evidence of welding, or etching.
- Wear limits have been exceeded. See Tables A-1 through A-3 for wear limits.

Plain axle journal wear limits.

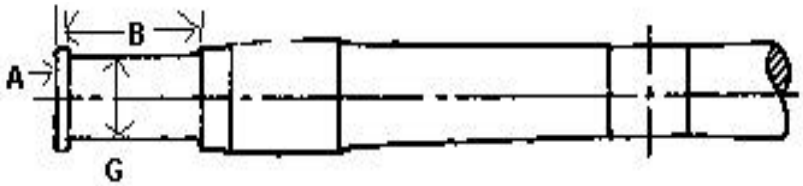

Figure A-16. Plain axle journal.

Table 5-1. Plain axle journal wear limits.

Journal Size Standard	REJECT WHEN REACHED		
	Journal Collar	Journal Length	Journal Diameter
	A	B	G
4 ¼ x 8”	3/16”	8 11/16”	3 ¾”
5 x 9	3/16”	8 11/16”	4 ½”
5 ½ x 10”	3/16”	8 11/16”	5”
6 x 11”	3/16”	8 11/16”	5 ½”
6 ½ x 12”	3/16”	8 11/16”	6 ½”
7 x 12”	3/16”	8 11/16”	6 ½”

Plain axle wear limits.

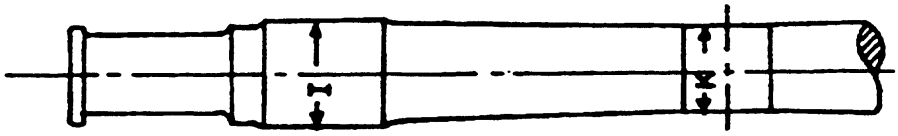

Figure A-17. Plain axle.

Table A-2. Plain axle wear limits.

Journal Size Standard	REJECT WHEN LESS THAN		
	Journal Collar	Journal Length	Journal Diameter
	A	B	G
4 ¼ x 8”	5 ½”	6 1/16”	4 11/16”
5 x 9”	6 1/4”	6 ¾”	4 ½”
5 ½ x 10”	6 ¾”	7 3/16”	5 ¾”
6 x 11”	7 3/8”	7 7/8”	6 5/16”
6 ½ x 12”	7 7/8”	8 3/8”	6 ¾”
7 x 12”	7 7/8”	9 ¼”	7 7/8”

Roller bearing axle wear limits.

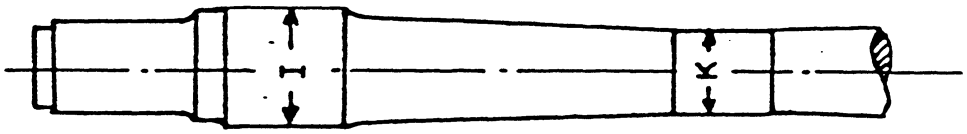

Figure A-18. Roller bearing age.

Table A-3. Roller bearing axle wear limits.

Journal Size Standard	REJECT WHEN LESS THAN		
	Wheel Seat Black Collar	Wheel Seat Raised	Axle Center
	A	B	G
4 ¼ x 8”	5 ½”	6 1/16”	4 11/16”
5 x 9”	6 1/4”	6 ¾”	5 ½”
5 ½ x 10”	6 ¾”	7 3/16”	5 ¾”
6 x 11”	7 3/8”	7 7/8”	6 5/16”
6 ½ x 12”	7 7/8”	8 3/8”	6 ¾”
7 x 12”	……..	9 ¼”	7 7/8”

6. Defective rail car truck.

a. A rail car truck shall be repaired before placing or continuing in service if a side frame has any of the following defects:

(1) A side frame or bolster that is broken or has a crack of ¼ inch or more in the transverse direction on a tension member, is bent, is patched, or is the wrong size.

(2) A side frame is worn or corroded more than 25% in any section of the side frame, except brake hanger bracket, journal box or column guide on which any section should not be reduced below 40% of the original section. See Table A-4 for wear limits.

(3) Truck equipped with a snubbing device that is ineffective, as evidenced by a snubbing friction element that is worn beyond a wear indicator; a snubber wear plate that is loose, missing (except by design), or worn through; a broken or missing snubber activating spring; or a snubber unit that is broken. See Figures A-19 and A-20 for examples of typical snubbing devices. See Figure A-21 for an illustration of wear limit indicators of friction castings or elements.

(4) A truck with a broken or leaking snubbing units in the case of hydraulic snubbing units as evidenced by clearly formed droplets of oil or other fluid.

(5) The truck springs do not maintain travel or load.

(6) The truck springs are compressed solid or the wrong type.

(7) More than one outer truck spring which is broken or missing in any spring cluster.

(8) The truck spring dimensions are out of limits. (See Table A-5).

(9) Badly worn brake beam shelf support that it does not support the brake beam.

(10) The brake hanger bracket bent or worn oblong to a depth of 1/2 of its original diameter or worn oblong so that remaining material is not less than 60% of the original section.

(11) The vertical wear liner has a piece loose or missing.

NOTES:
Figure A-22 shows an example of a bolster gib and side frame wear plate.

When side frames are replaced, they should be matched for wheelbase (distance between pedestal center lines). See Figure A-23, method of marking and mating cast steel track side frames. A uniform practice for marking truck side frames to permit pairing of frames on same truck, with respect to dimensions between centers of journal boxes (wheelbase), has been adopted. Present standards permit a tolerance of plus or minus 3/16 inch in this dimension which, unless controlled, results in a possible total variation of 3/8 inch in the wheelbase dimension on opposite sides of the same truck. Under the adopted system, the number of buttons remaining on the side frame indicates the variation over the nominal dimension, as shown by tabulation, and frames having the same number of buttons or when one of the same number is selected for use on the same truck. By following this method, the variation in wheelbase dimension would not exceed .150 inch. Similar procedure may be followed in the case of reclaimed side frames not provided with buttons by gauging the dimension between center of journal boxes and stenciling the proper designation number on outside wall of left hand journal box, in same location as prescribed for the mating buttons.

Friction elements should be replaced when friction face is worn to the extent that limit of wear indicator is obliterated.

Building up of worn surfaces or welding of cracks on side frames permitted only in cross-hatched area of diagram and provided the material remaining in the part to be built up is equal to 60% of the original section or the crack does not extend more than 40% through the cross-sectional area of the casting. See Figure A-24, illustration of repair welding of truck side frames.

(12) The vertical wear liner has two or more complete vertical cracks. Cracks at the weld joint between liner and rim exceeding 50% of total length must be repaired by an approved procedure.

(13) The horizontal (roof) liner is broken into two or more pieces or has a piece missing; the horizontal shims are incorrect or are not appropriate for car (to be used when shims are applied incorrectly to 100 ton or larger cars).

b. A rail car truck shall be repaired before placing or continuing in service if the bolsters have any of the following defects:

(1) A side bearing has any of the following conditions: the bearings at one end of the car, on both sides, are in contact with the body bolster (except by design) or the bearings at one end of the car have a total clearance from the body bolster of more than 3/4 inch. Side bearings shall have 3/16 inch minimum and 5/16 inch maximum clearance (except for constant contact side bearings). Constant contact side bearings shall be shimmed in accordance with manufacturers' instructions.

(2) There is interference between the truck bolster and the center plate that prevents proper truck rotations.

(3) The truck bolsters are broken, cracked, or bent; or are worn or corroded where any section is reduced 25% except friction pockets which can be reduced by a maximum of 40%.

(4) Any bolster gibs are worn beyond limits contained in Table A-4.

(5) The difference in diameters of body centerplate and truck bolster bowl exceeds 12 7/8 inches (for a 12 inch diameter bowl), or 14 7/8 inches (for a 14 inch diameter bowl), or 16 7/8 inches (for a 16 inch diameter bowl).

(6) Bowl depth, including horizontal wear plate, has increased to 1 15/32 inches (for a 1 1/8inch bowl depth) or 2 3/32 inches (for 1 3/4 inch bowl depth). At least 1/16 inch clearance between truck bolster bowl rim and body centerplate base must be maintained.

(7) Body side bearings that are cracked, bent, broken, worn in excess of 1/8 inch or missing should be replaced.

NOTES:
Any portion of the truck or their appurtenances (except wheels) has less than a 2 1/2 inch clearance from the top of rail.

Worn center plates may have wear surfaces built up by welding and then machined or ground smooth to proper contour, without removal from car.

When a car body is raised off trucks for any reason, the center plate should be cleaned of all loose rust, scale and debris, and lubricated properly.

Top surface of bolster bowl rim should not be in contact with centerplate horizontal surface, proper shimming can be used to correct such a situation.

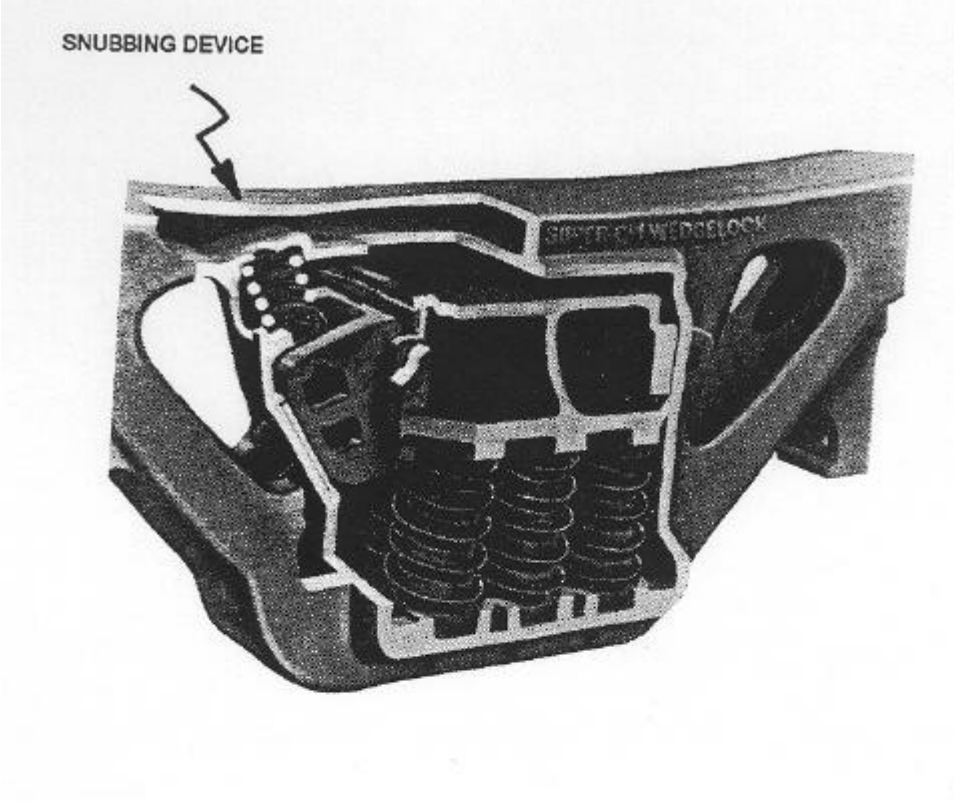

Figure A-19. Example of a snubbing device.

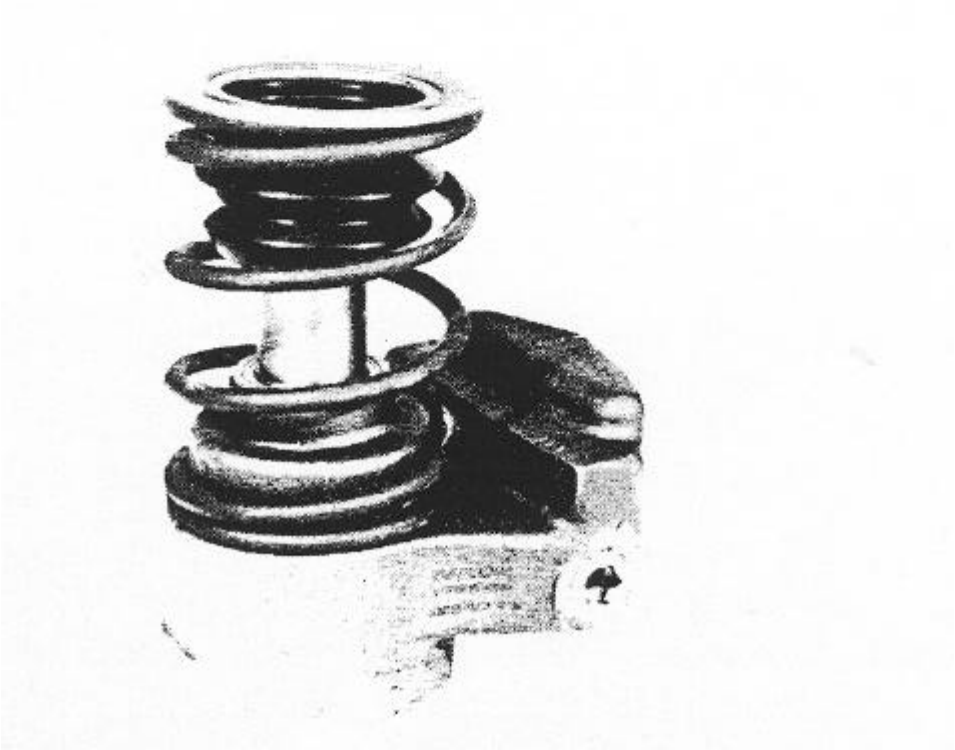

Figure A-20. Example of spring pack type snubbing device.

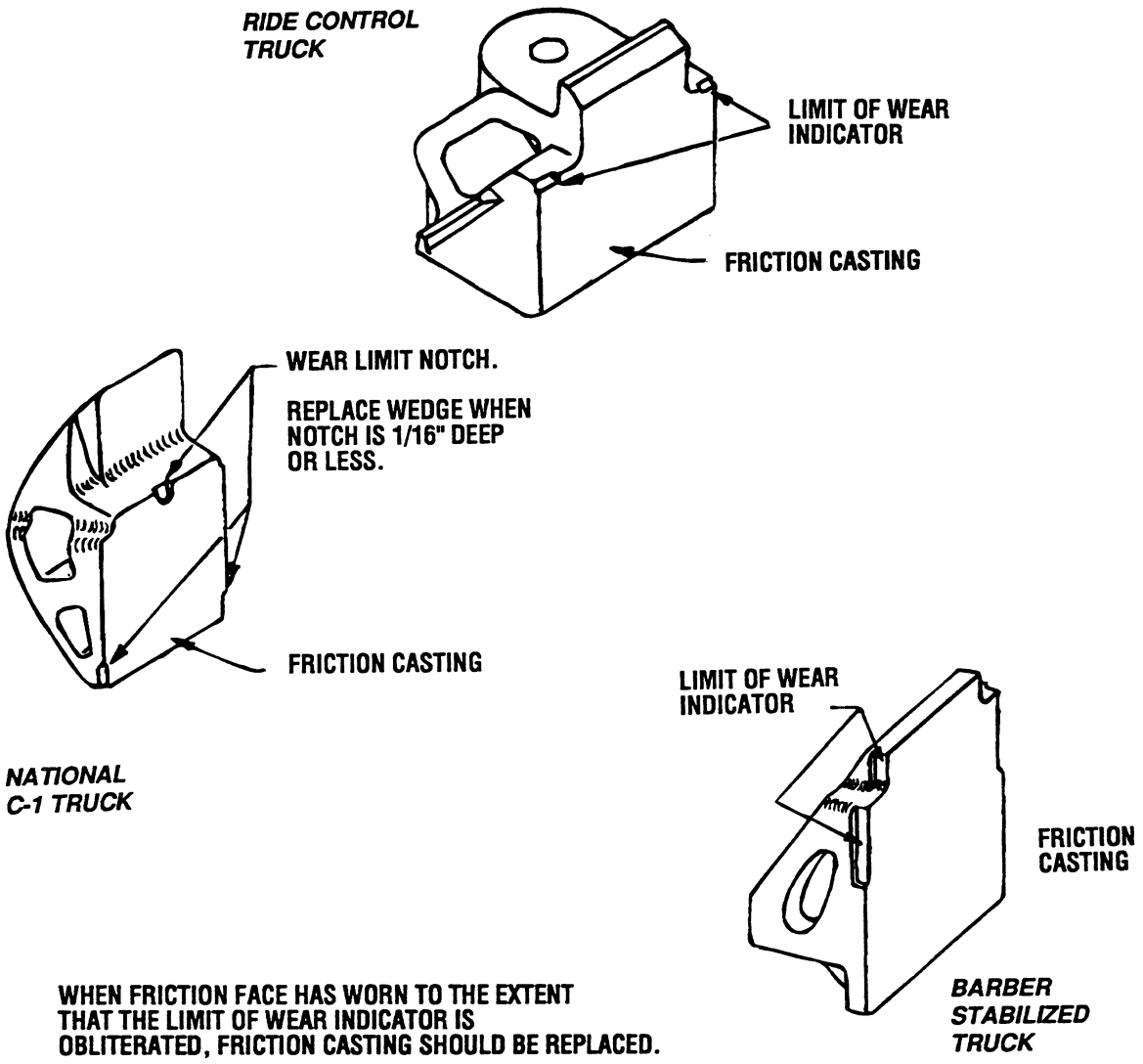

Figure A-21. Illustration of wear limit indicators of friction castings or elements.

See Figure A-22, Bolster gibs and side frame wear plates.

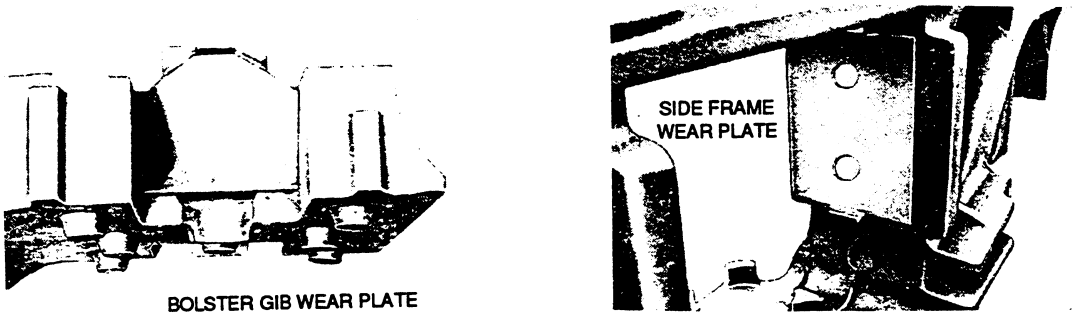

Figure A-22. Example of a bolster gib and side frame wear plate.

Table A- 4. Truck side frame and bolster gib wear limits.

When wheels are changed or trucks dismantled, wear on truck side frame columns and bolster gibs must be measured before disassembly and when wear exceeds limits shown below, same must be repaired.					
Type of Truck	**Repair when total clearance between bolster and truck side frame columns reaches:**		**Repair to these nominal clearance dimensions between bolster and truck side frame:**		
	Lateral	**Longitudinal**	**Lateral**		**Total Longitudinal**
			Inside	**Outside**	
Plain bearing trucks WITHOUT built-in features…….	1 1/8”	¾”	1/8”	1/8”	3/16”
Trucks WITH built-in snubbing features having plain bearings (all bearing sizes) or having roller bearingss which provide bearing lateral (all bearing sizes) or having 5”x 9” or 5 ½ “ x 10” roller bearings which provide no bearing lateral…….	1 1/8”	*		¼”	*
Trucks WITH built-in snubbing features having 6” x 11”, 6 ½” x 12” or 7” x 12” roller bearings which provide no bearing lateral	1 ½”	*	½”	½”	*
* Longitudinal clearances are primarily a matter of wear of frame or bolster column wear plates, friction shoes and bolster column surfaces. See maintenance instructions from truck designer or manufacturer.					

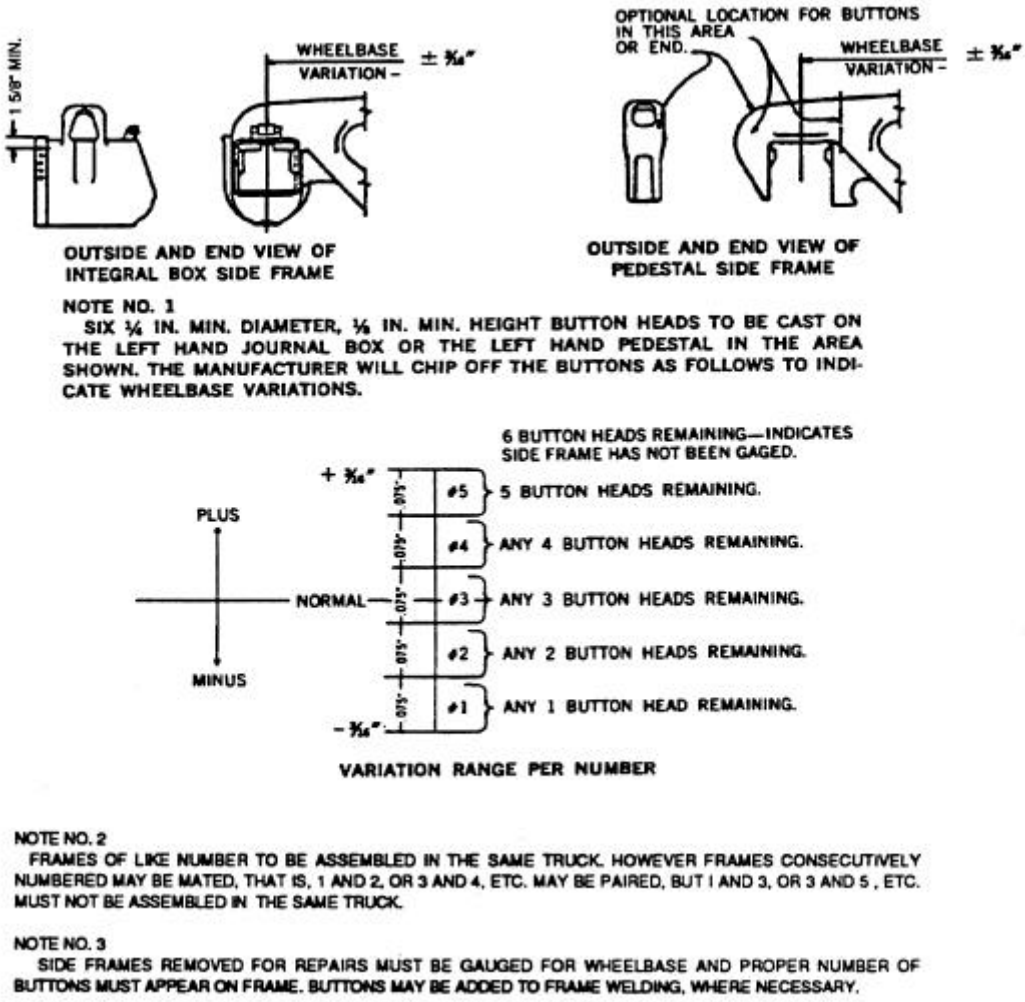

Figure A-23. Method of marking and mating cast steel truck side frames.

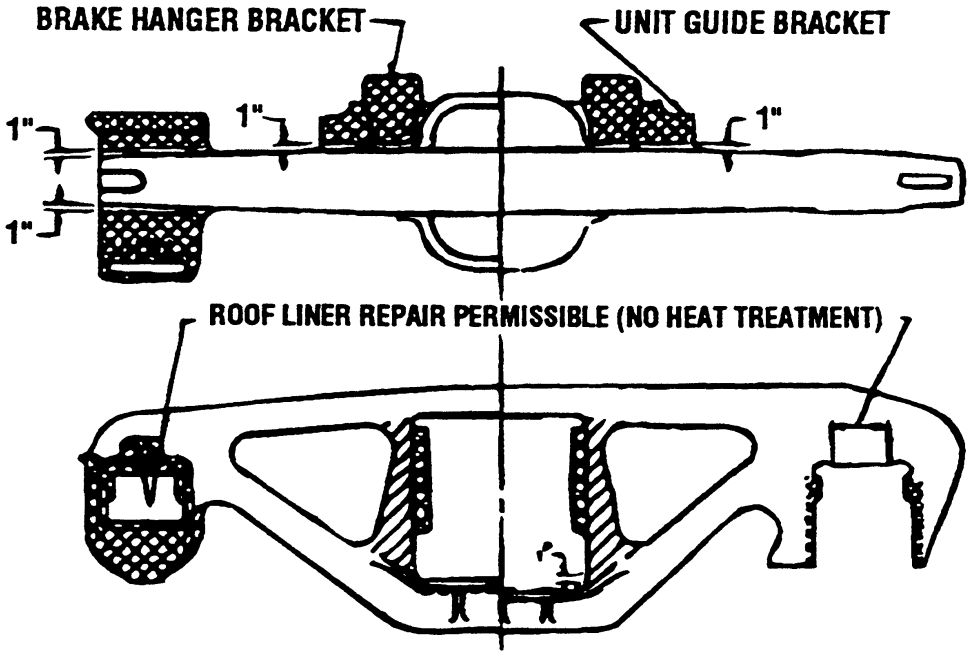

Figure A-24. Illustration of repair welding of truck side frames.

Table A-5. Truck spring condemning height limits

Load carrying springs must be renewed when gaged and found less than the following limits. Gaging is required when trucks are dismantled for any reason, but is permissible at any time.

AAR Designation	Load carrying spring condemning free height
D2	7 7/8 inch
D3	8 5/8 inch
D4	9 1/16 inch
D5	9 5/8 inch
D6	9 5/16 inch
D6A	8 3/8 inch
D7	10 inch

CONDEMNING HEIGHTS FOR EXCESSIVE CORROSION OR PITTING FREIGHT TRUCK SPRINGS BASED UPON 50% LOSS OF RESERVE TRAVEL AT MAXIMUM WORKING LOAD

Spring Class	Nominal New Height	Test Load	Recommended Condemning Height At Test Load
D2-Outer	8 1/4"	5500	7 9/32 plus or minus 1/32
D2-Inner	8 1/4"	2200	7 5/32 plus or minus 1/32
D3-Outer	9 1/16"	5500	7 5/16 plus or minus 1/32
D3-Inner	9 1/16"	2200	7 5/16 plus or minus 1/32
D4-Outer	9 5/8"	5500	7 3/16 plus or minus 1/32
D4-Inner	9 5/8"	2200	7 1/16 plus or minus 1/32
D5-Outer	10 1/4"	5500	7 1/16 plus or minus 1/32
D5-Inner	10 5/16"	2200	7 21/32 plus or minus 1/32
D6-Inner	9 15/16"	2200	7 21/32 plus or minus 1/32
D6A-Inner	9"	1100	6 1/8 plus or minus 1/32
D7-Outer	10 13/16"	5500	7 5/16 plus or minus 1/32
D7-Inner	10 3/4"	2200	7 11/16 plus or minus 1/32

c. A railcar shall be repaired before placing or continuing in service if the couplers have any of the following defects:

(1) The distance between the guard arm and the knuckle in the pull position exceeds 5 5/16 inches for type E and E/F couplers. See Figure A-25 for an illustration of an E type coupler gauge and how to use it.

(2) The distance between the front face and the knuckle in the pull position exceeds 3 13/16 inches for type F couplers. See Figure A-26 for an illustration of an F type coupler gauge and how to use it.

(3) A coupler part(s) of any type found which is broken, cracked, bent, or missing.

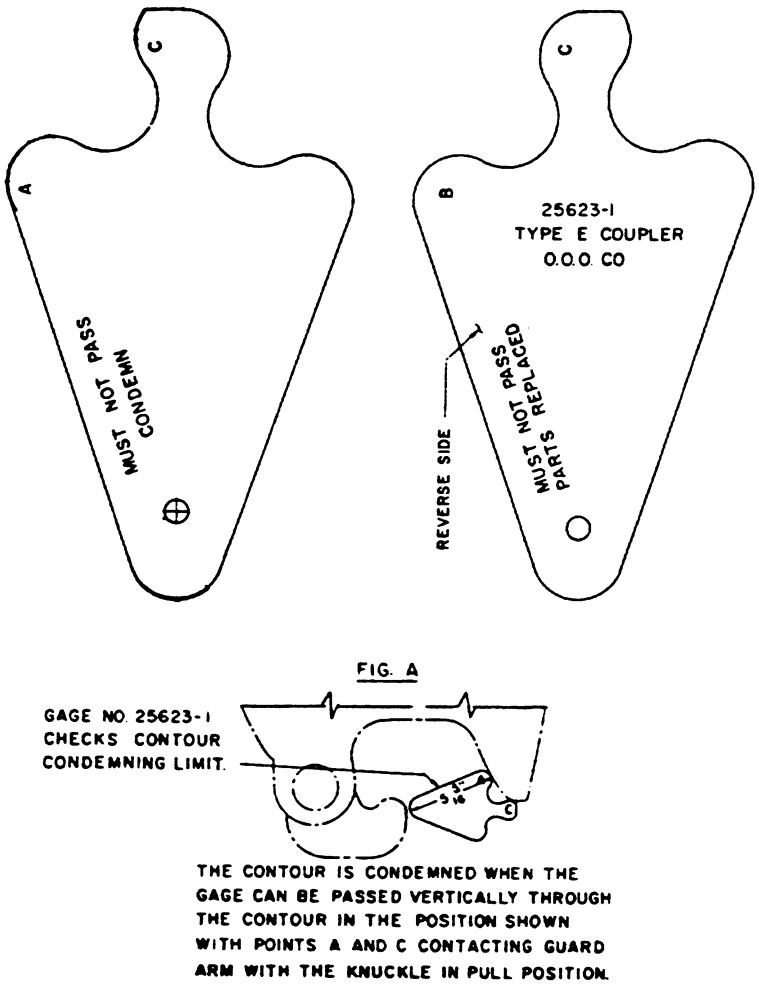

Figure A-25. Example of a type E coupler gauge.

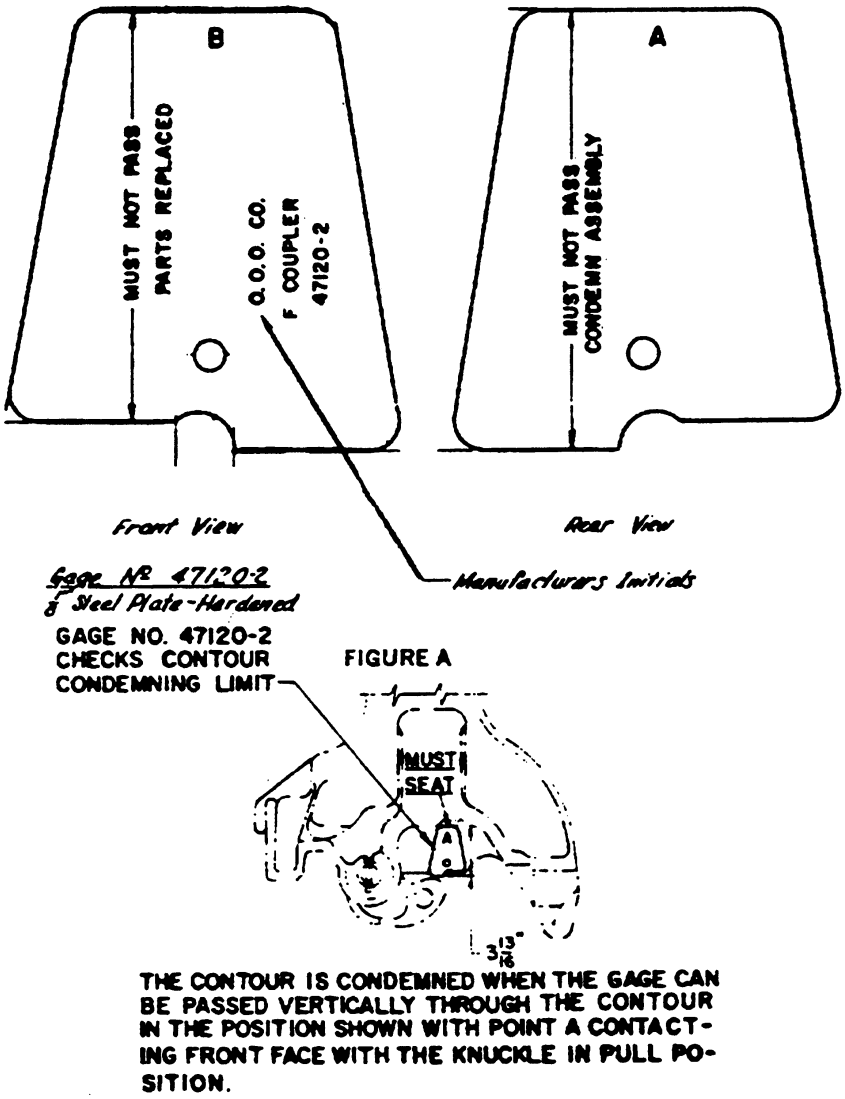

Figure A-26. Example of a type F coupler gauge.

(4) Coupler heights that are not within limits. The recommended coupler heights are shown in Table A-6 below.

Table A-6

Recommended coupler heights		
	minimum	Maximum
Empty	32.5 inches	34.5 inches
Loaded	31.5 inches	33.5 inches
Height is measured from top of rail to the center of face of the coupler.		

(5) The car is equipped with a coupler shank that is bent out of alignment to the extent that the coupler will not couple automatically with the adjacent car.

(6) The car has a coupler that has a crack in the highly stressed junction area of the shank and head as shown in Figure A-27 for an illustration of a coupler shank and head.

(7) The car has a coupler knuckle that is broken or cracked on the inside pulling face of the knuckle.

(8) The car has a knuckle pin or knuckle thrower that is missing or inoperative.

(9) The coupler retainer pin lock is missing or broken.

(10) The coupler assembly does not have anti-creep protection to prevent unintentional unlocking of the coupler lock.

(11) The coupler locklift is inoperative.

(12) The coupler lock is missing, inoperative, bent, cracked, or broken.

(13) The railcar has an uncoupling device without sufficient lateral and vertical clearance to prevent fouling on curves or unintentional uncoupling.

d. A railcar shall be repaired before placing or continuing in service if the draft arrangement has any of the following defects:

(1) Yokes that are inoperative, bent, broken, cracked in the web portion from rear of key slot. See Figure A-28 for acceptable yoke cracks.

(2) Yoke straps that are worn more than 25% of its cross-sectional area.

(3) Draft gear housings are broken, split, cracked, or rear wall of housing is bulged more than 3/16 inch.

(4) Parts that bear on the follower are broken or cracked.

(5) Stuck draft gear.

(6) The draft has fire damage.

(7) The draft gear has inappropriate free length.

(8) A vertical coupler pin retainer plate is missing (except by design) or has a missing fastener.

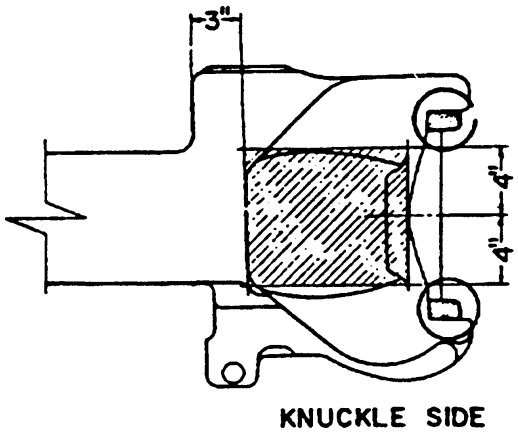

Figure A-27. Example of a coupler shank and head.

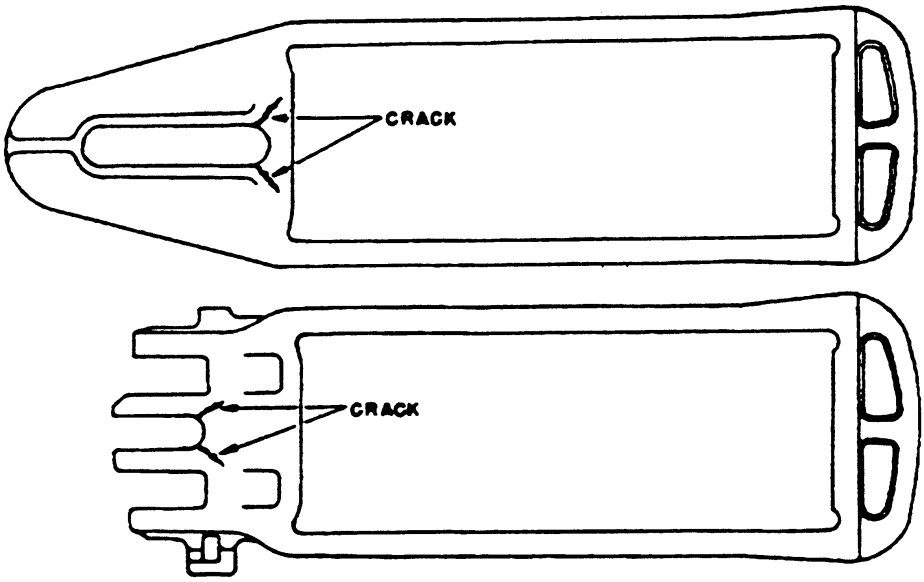

Figure A-28. Example of acceptable yoke cracks.

(9) The car has a draft key, or draft key retainer, that is inoperative or missing.

(10) The draft gear arrangement has a broken, bent, worn, or missing follower plate. Followers broken, bent 1/2 inch or more, or worn more than 1/8 inch in any location shall be renewed.

(11) Hydraulic end of car cushion units that are leaking clearly formed droplets or are inoperative.

e. A railcar shall be repaired before placing or continuing in service if the car body has any of the following defects:

(1) Coupler carriers that are cracked, broken, or worn more than 1/2 of the original thickness, or with a wear plate missing or worn through.

(2) The coupler has a type F head and is non-resilient.

(3) Body center plates are cracked, broken, missing or not secured; or has two or more cracks through its cross section (thickness) at the edge of the plate that extend to the portion of the plate that is obstructed from view while the truck is in place.

(4) The total clearance between truck and body center plate exceeds 1 3/8 inches.

(5) Body center plate bowl diameter is reduced to 11 inches (for a 12 inch diameter center plate), 13 inches (for a 14 inch diameter center plate), or 15 inches (for a 16 inch diameter center plate) at any point.

(6) Body center plate bowl height has been reduced by more than 3/8 inch.

(7) The car has a broken sidesill, crossbearer, or body bolster.

(8) Body side bearings that are cracked, bent, broken, missing or worn in excess of 1/8 inch.

(9) The car center sill is broken, cracked more than six inches, or permanently bent or buckled more than 2 1/2 inches in any 6-foot length.

(10) Any portion of the car body or their appurtenances (except wheels) has less than a 2 1/2 inch clearance from the top of rail.

NOTE:
<u>Cars utilized for the movement of Class 1 explosives should be equipped with spark shields above the wheels.</u>

f. Platforms, safety appliances, and general requirements for railcar maintenance.

(1) Uncoupling levers and support brackets that are bent, broken, cracked, worn to less than 1/2 of their original thickness, or inoperative shall be repaired or replaced.

(2) Crossover platforms that are bent, broken, missing, or suffering from metal deterioration shall be repaired or replaced.

(3) Brake steps and crossover platform renewed shall be of the perforated plate type.

(4) Wood that is broken, decayed, or missing shall be replaced.

(5) Each railcar should have two end platforms with a width of not less than eight inches and a length not less than 60 inches centered on each end of the car not more than eight inches above the center sill. Each end platform shall be securely supported by not less than three metal braces having a minimum cross-sectional area 3/8 inch by 1 1/2 inches or equivalent which should be securely fastened to the body of car with not less than 1/2 inch bolts or rivets.

(6) Material used for end-platforms and brake steps shall have a tread surface of an anti-skid design and constructed with sufficient open space to permit the elimination of snow and ice from the tread surface.

(7) Each boxcar shall have two horizontal end-platform handholds with a minimum diameter of 5/8 inch steel, a minimum clearance of two inches, and a minimum clear length of 60 inches with supports if necessary. One shall be located on each end of car above end platform. Outer legs shall not be more than six inches from inner legs of top end handholds. Height above tread of end platform shall be not less than 48 inches or more than 60 inches. Handholds, sill steps, and all other safety appliances shall be securely fastened with not less than 1/2 inch bolts with nuts outside (when possible) and riveted over, or with not less than 1/2 inch rivets.

g. The following are general requirements for tank cars:

(1) Tank cars shall have the following parts properly secured in place and equipped with chain or other type securing devices: dome covers (chained or hinged); outlet valve reducers, caps, and cap pipe plugs; heater coil inlet and outlet pipe caps or end plugs.

(2) Tank cars used on Navy installations for the purpose of transporting petroleum products shall have their tank and pressure relief valve pressure tested every ten years. Test pressure shall be 60 psi for the tank and a vapor-tight pressure of 28 psi and start—to—discharge pressure of 35 psi for the safety relief valve. Some tank cars built before 1959 may have lower pressure relief valves. If this is the case, the vapor tight level is 20 psi and the start—to—discharge level is 25 psi.

(3) Tanks which show signs of deterioration such as dents, corroded areas, leakage, or other conditions that indicate weakness which could render the tank unsafe for the transportation of hazardous materials shall be re-tested.

(4) Tanks damaged in an accident to the extent that may adversely affect its product retention capability shall be re-tested.

(5) Whenever the leaking condition of a tank car requires the transfer of lading or makes the tank unfit for reloading, the car shall be stenciled on both sides in letters three inches in size, adjacent to the car number, "LEAKY TANK- DO NOT LOAD UNTIL REPAIRED."

INTENTIONALLY LEFT BLANK

APPENDIX B

RAILROAD MANAGEMENT FORMS

The forms listed in this appendix are pertinent for the management of a viable railroad program and shall be used as tools to fully enhance the program.

LIST OF FORMS

FORM		PAGE
Form 1.	Locomotive Inspection Checklist	B-2
Form 2.	Train Crew Notice	B-3
Form 3.	Train Crew Notice Acknowledgment Sheet	B-4
Form 4.	Locomotive Exception Report	B-5
Form 5.	Daily Locomotive Maintenance Report	B-6
Form 6.	Railcar Deficiency Report	B-8
Form 7.	Diagnostic Team Crossing Evaluation Report	B-9
Form 8.	NWS Seal Beach Highway/Railroad Crossing Information (Sample)	B-14
Form 9.	Written Test for Brakeman Railroad Equipment Operator License	B-15
Form 10.	Written Test for Conductor Railroad Equipment Operator License	B-18
Form 11.	Written Test for Engineer Railroad Equipment Operator License	B-22

Form 1
LOCOMOTIVE INSPECTION CHECKLIST

Date _____ Locomotive Number_____Operator_____

Item	Status	Action Taken
Safety Appliances (ladders, hand holds, and fire extinguishers)		
Air brake hoses		
Control Hoses, MU Cables		
Locomotive engine oil level		
Compressor oil level		
Governor oil level		
Engine coolant level		
Hand brake tests		
Engine protective devices		
Air and fuel oil cleaners and filters		
Couplers and knuckles		
Wheels, sanders, brake rigging, and other		
Other truck components		
Fuel oil tanks		
Sand box level		
Switch settings		
Headlights		
Locomotive brakes		
Horn and bell		
Window wipers		
Miscellaneous water, air and oil leaks		
Cab and engine compartment cleanliness		
Radio check		
Speed/event indicator and recorder (where applicable)		

Remarks: _____

_____

Form 2
TRAIN CREW NOTICE

Number: _____

Effective Dates: _____ to _____

Location(s) Affected: _____

_____

_____

_____

_____

_____

Notice _____

_____

_____

_____

_____

_____

_____

_____

_____

_____

_____

_____

_____

_____

Form 3
TRAIN CREW NOTICE ACKNOWLEDGEMENT SHEET

Sheet Number: _____

Date: _____

Employee Signature	Time	Date	Highest Train Crew Notice Number

Form 4
LOCOMOTIVE EXCEPTION REPORT

Date _____ Shift _____Locomotive # _____ Operator _____

ITEM #	EXCEPTION	CORRECTED

Maintenance Department Review Completed_____

Form 5
DAILY LOCOMOTIVE MAINTENANCE REPORT

Date _____Shift _____Logo # _____Mechanic_____
Instructions: All outstanding locomotive exception reports should be checked in addition to completing this form as part of the daily maintenance on each locomotive.

Item	Action
Check and replenish, if necessary:	
Coolant	
Lube oil	
Compressor oil	
Governor oil	
Fuel oil	
Sand	
Battery water	
Check and clean all filters as required	
Daily lubrication	
Horn, bell, lights, and windshield wipers	
Check hand brake	
Brake equipment	
Sanders	
Cooling fan(s)	
Couplers	
Brake rigging	
Brake shoes	
Brake piston travel	
Cab heater	
Doors, grab irons, and safety devices	
Loose electrical wiring	
Loose bolts, nuts, and pins	
All hoses and belts	

Form 5 (cont.)
DAILY LOCOMOTIVE MAINTENANCE REPORT

Item	Action
Leaks in:	
Fuel system	
Lube system	
Air system	
Intake system	
Exhaust system	
Wheels and journals	
Drain moisture from air reservoirs	
Check for unusual engine or other noises	
Check alarm and protective circuits	
Check journal and traction motor bearings	
Brake pipe pressure	
Main reservoir pressure	
High	
Low	
Maintenance department review completed _____	

Form 6
RAILCAR DEFICIENCY REPORT

Date_____ Shift _____ Trainmen _____

ITEM#	EXCEPTION	CORRECTED

Maintenance Department Review Completed_____

FORM 7

DIAGNOSTIC TEAM
CROSSING EVALUATION REPORT

AAR/DOT NO.	
Date of diagnostic Review:	

LOCATION DATA

RAILROAD:	STATE:	COUNTY:	CITY (In or near)
R.R. DIVISION:		STREET/ROAD NAME:	
NEAREST R.R. TIMETABLE STATION	R.R. MILEPOST	BRANCH/LINE NAME:	

DIAGNOSTIC REVIEW

INITIATED BY	RAILROAD ☐	STATE ☐	LOCAL ☐	OTHER ☐	DATE INITIATED	

DIAGNOSITIC TEAM	NAME	AFFILIATION
1		
2		
3		
4		
5		
6		
7		

RAILROAD DATA

Daily Train Movement		Check If Less Than One Movement Per Day		TYPE AND NUMBER OF TRACKS	
Total Trains		Amtrak Movement Per Day		MAIN …….. OTHER ……	If Other Specific:
Day Thru		SPEED OF TRAIN		Can two trains occupy crossing at the same time? Yes ☐ No ☐	
Night Thru		Max …….mph		**Can one train block the motorist's view of another train at the crossing? If yes, explain. Yes ☐ No ☐**	**If yes, explain**
Day Switch		Typical …… to ……. mph			
Night Switch					

CROSSING SERVICE	TRACK	TYPE	WIDTH	CONDITION
	CROSSING ANGLE			

ROADWAY DATA

AGENCY HAVING JURISDICTION	**ADT**	**PERCENT TRUCK %**	**ROADWAY SURFACE**

SPEED OF VEHICLE	**SCHOOL BUS OPERATION**	**HAZARDOUS MTRLS.**	**PEDESTRIANS**	
MAX…….MPH	☐ **YES** ☐ **NO**	☐ **YES** ☐ **NO**	☐ **YES** ☐ **NO**	**ROADWAY WIDTH**
Typical ….. 10……..mph	**No Day**	**No Day**	**CURB & GUTTER** ☐ **Yes** ☐ **No**	ROADWAY CONDITION

SHOULDER	☐ **Yes** ☐ **No**	**If Yes, Width:**	**Is the shoulder surfaced**	☐ **Yes** ☐ **No**	**If yes, width:**	**Is sidewalk present?** ☐ **Yes** ☐ **No**

SPECIAL CONDITIONS REQUIRED AS A RESULT OF NEARBY HIGHWAY INTERSECTIONS:

FORM 7 (cont.)

AAR/DOT NO.

EXISTING WARNING DEVICE

YES	NO	QTY	TYPE OF WARNING DEVICE		YES	NO	QTY	LENSES 8"	LENSES 12"	TYPE OF WARNING DEVICE	
			ADVANCE WARNING SIGNS	LOCATION						MAST MOUNTED FLASHING LIGHTS	
			STOP SIGNS	LOCATION						CANTILEVER FLASHING LIGHTS	LENGTH
			STOP AHEAD SIGNS	LOCATION						SIDE LIGHTS	
			PVMT MARKINGS	LOCATION						AUTOMATIC GATES	LENGTH
			CROSSBUCKS					WIGWAMS			
			NUMBER OF TRACK SIGNS					BELLS			
			INVENTORY TAGS					SIDEWALK GATE ARMS			LENGTH
			INTERCONNECTED HIGHWAY TRAFFIC SIGNALS					"NO TURN" SIGNS			
								ILLUMINATION			

FIVE YEAR ACCIDENT DATA

TOTAL ACCIDENTS		PROPERTY DAMAGE ONLY				OTHER	SPECIFY
		PERSONAL INJURY ACCIDENTS			IS CROSSING FLAGGE BY TRAIN CREW ?		
		FATAL ACCIDENTS					
NO. OF PERSONAL INJURIES		NUMBER OF FATALITIES					

TYPE OF DEVELOPMENT

☐ OPEN SPACE ☐ RESIDENTIAL ☐ COMMERCIAL

☐ INDUSTRIAL ☐ INSTITUTIONAL

LOCATION OF NEARBY SCHOOLS

NEW DEVELOPMENTS THAT COULD AFFECT ADT? ☐ YES ☐ NO

IF YES, DESCRIBE:

ADJACENT CROSSINGS

DOT NO.	STREET/ROAD NAME	WARNING DEVICE	ADT

IS THERE ADEQUATE ACCESS FROM THIS CROSSING TO ADJACENT CROSSINGS?

☐ YES ☐ NO

IF YES, WHICH CROSSING(S)?

CAN ROADWAY REALIGNMNENT BE ACCOMPLISHED TO ALLOW CONSOLIDATION OF CROSSINGS? If YES, PROVIDE SKETCH.

☐ YES ☐ NO

IMPACT OF CLOSURE

SKETCH:

DR Form 153, Apr 83 (Page2)

FORM 7 (cont.)

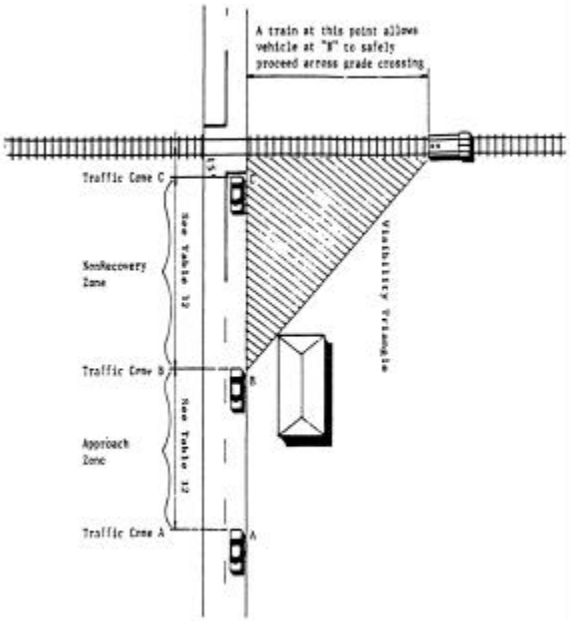

REQUIRED DESIGN SIGHT DISTANCE FOR COMBINATIONS OF HIGHWAY AND TRAIN VEHICLE SPEEDS

TRAIN SPEED	HIGHWAY SPEED IN MPH							
	0	**10**	**20**	**30**	**40**	**50**	**60**	**70**
10	**162**	**126**	**94**	**94**	**99**	**107**	**118**	**129**
20	**323**	**252**	**188**	**188**	**197**	**214**	**235**	**258**
30	**484**	**378**	**281**	**281**	**295**	**321**	**352**	**387**
40	**645**	**504**	**376**	**376**	**394**	**428**	**470**	**516**
50	**807**	**630**	**470**	**470**	**492**	**534**	**586**	**644**
60	**967**	**756**	**562**	**562**	**590**	**642**	**704**	**774**
70	**1129**	**882**	**656**	**656**	**684**	**750**	**822**	**904**
80	**1290**	**1008**	**752**	**752**	**788**	**856**	**940**	**1032**
90	**1450**	**1134**	**844**	**844**	**884**	**964**	**1056**	**1160**
	DISTANCE ALONG HIGHWAY FROM CROSSING ("B")							
	20	**65**	**125**	**215**	**330**	**470**	**640**	**840**

NOTE: 1 MPH = 161 KPH
1 FOOT = 304 METERS

SIGHT DISTANCE LOCATION SKETCH:

SIGHT DISTANCE						**STOPPED VEHICE SIGHT DISTANCE**
TYPICAL TRAIN SPEED		MPH	TYPICAL HIGHWAY SPEED		MPH	STOPPED SCHOOL BUS = (13.5) (TRAIN SPEED) =
REQUIRED DISTANCE "A"			REQUIRED DISTANCE "B"			STOPPED SEMITRAILER = (17.5) (TRAIN SPEED) =

NORTHWEST QUADRANT	**NORTH EAST QUADRANT**
SIGHT OBSTRUCTION	SIGHT OBSTRUCTION
ACTUAL DISTANCE "A" ……..FT.	ACTUAL DISTANCE "A"……FT.
SOUTHWEST QUADRANT	**SOUTHEAST QUADRANT**
SIGHT OBSTRUCTION	SIGHT OBSTRUCTION
ACTUAL DISTANCE	ACTUAL DISTANCE "A"…….FT.

DR Form 153, Apr 83 (retyped 4-15-99){Page 3}

FORM 7 (cont.)

AAR/DOT NO:

RECOMMENDATIONS		
ARE IMPROVEMENTS TO THE CROSSING RECOMMENDED?	☐ YES ☐ NO	IF NO, EXPLAIN:

IF YES, WHAT IMPROVEMENTS	DESCRIBE

DR Form 153, Apr 83 (Page 4)

FORM 7 (cont.)

AAR/DOT NO.

PROPOSED COST APPORTIONMENT								
YES	NO	TYPE OF IMPROVEMENT	PROPOSED FUNDING					WORK TO BE PERFORMED BY
			FED.	STATE	LOCAL	R.R.	OTHER	
		SIGHT IMPROVEMENT						
		CROSSING SURFACE						
		HIGHWAY TRAFFIC SIGNS						
		CROSSING SIGNALS						
		CROSSING CLOSURE						
		ILLUMINATION						
		OTHER						

SIGNATURES OF ACCEPTANCE		
STATE REPRESENTATIVE:	TITLE:	DATE:
R.R. REPRESENTATIVE:	TITLE:	DATE:
LOCAL REPRESENTATIVE:	TITLE:	DATE:
FMWA REPRESENTATIVE:	TITLE:	DATE:
	TITLE:	DATE:

DR FORM 153, Apr 83 **(page 5)**

FORM 8

(EXAMPLE) NWS SEAL BEACH HIGHWAY/RAILROAD CROSSING INFORMATION

TSC CROSSING	TRACK NO.	STREET	ADVANCE WARNING SIGNS	PAVEMENT MARKINGS	STOP SIGN	CROSS-BUCK	CROSS SURFACE
# 1	R-1 SEC2	ANAHEIN BAY RD	ONE	ONE	ONE	------	PAVED
# 2	RW-5	KITTS HGWY.	ONE	TWO	----	------	PAVED
# 3	R17-1	KITTS HGWY.	TWO	TWO	----	------	PAVED
# 4	R1-2	KITTS HGWY	ONE	TWO	TWO	TWO	PAVED
# 5	R1 SEC 5	BOLSA AVE.	TWO	ONE	ONE	-------	PAVED
# 6	R1 7-1	NET ROAD.	ONE	TWO	-----	-------	PAVED
# 7	R1 7-1	ANCHOR ROAD	TWO	-------	------	-------	PAVED
# 8	R-1 SEC 6	FORRESTAL AVE.	ONE	-------	ONE	-------	PAVED
# 9	RW-4	NEXT SEAL WAY	--------	-------	------	-------	PAVED
# 10	RW-4	NEXT SEAL WAY	-------	ONE	------	-------	PAVED
# 11	PRIVATE	SEAL BEACH BV.	-------	------	------	-------	PAVED
# 12	PRIVATE	WESTMINSTER ST.	-------	------	------	-------	PAVED
# 13	NOT USED	KITTS HGWY.	-------	------	------	-------	PAVED
# 14	R-3 SEC 1	WESTMINSTER ST.	TWO	TWO	GATES	TWO	PAVED
# 14A	R-3 SEC 1	PERIMETER ROAD	-------	------	------	-------	PAVED
# 15	R-1 SEC 7	WESTMINSTER ST.	-------	FADED	ONE	-------	PAVED
# 16	RIS-1	WESTMINSTER ST.	TWO + 7 TRK	--------	-------	-------	PAVED
# 17	RIS-2	WESTMINSTER ST.	TWO	FADED	------	-------	PAVED
# 18	RIS-3	WESTMINSTER ST.	TWO	FADED	------	-------	PAVED

FORM 9

WRITTEN TEST FOR <u>BRAKEMAN</u>
RAILROAD EQUIPMENT OPERATOR LICENSE

NAME _____ Date of Test _____

For use of examiner only		
results signature of examiner	special remarks (if any)	

1. What is the proper location for a brakeman on a train? _____
_____

2. Who is responsible for the movement, safety, and proper care of the train? _____
_____
_____
_____

3. What action will brakeman take in the event the conductor cannot be seen during switching operations? _____
_____
_____

4. What safety precautions will be taken before train crosses dangerous intersections? _____
_____
_____
_____

5. What action will be taken by brakeman when unsafe conditions are noticed? _____
_____
_____
_____

6. In case of doubt or uncertainty, what must be done? _____
_____
_____
_____

7. In the event of an accident or injury to personnel, what action will be taken? _____
_____

FORM 9 (cont.)

8. What should be done when cars are left on a grade or cut loose from locomotive? _____

9. What is the procedure before going between cars? _____

10. What position is taken when cars are being pushed? _____

11. In which direction will brakeman face when giving signals? _____

12. What is procedure for uncoupling air hoses by hand? _____

13 What is proper position for applying hand brakes? _____

14. Which end of car is boarded when train is in motion? _____

15. What do the following signals mean when given by hand, flag, or lamp?

(1) Swung at right angles to track. _____

(2) Raised and lowered vertically. _____

(3) Swung vertically in a circle at arms length. _____

(4) Swung horizontally above the head when standing. _____

(5) Held at arms length above head, when standing. _____

(6) Any object waved violently by anyone on or near the track. _____

FORM 9 (cont.)

(7) Slight horizontal movement at arms length at right angles to the track. _____

_____

_____

16 Using an "O" for short sounds and (-) for longer sounds, use engine whistles signals for the following indications:

INDICATION

Apply brakes, stop _____
Proceed _____
Flagman protect rear of train _____

_____

Forward trainman protect ahead _____
Train has parted _____
Acknowledge signal given _____
When standing back_____
Call for signals _____
Approaching public crossing _____
Clearance to go through while work crew is working tracks _____

Obey Color Signals: Indicate the meaning of the following signals:

Red _____

_____

Yellow _____

_____

White _____

_____

Blue _____

_____

17. When does the train have the right of way on station? _____

_____

18. What is a train? _____

_____

19. What should be done after lining a switch and before giving a signal to move over it with cars or locomotive? _____

_____

20. What should be done when coupling cars and you notice a coupler out of line? _____

_____

_____

FORM 10

WRITTEN TEST FOR <u>CONDUCTOR</u>
RAILROAD EQUIPMENT OPERATOR LICENSE

NAME _____ Date of Test _____

	for use of examiner only	
results	special remark (if any)	signature of examiner

1. What is the most important responsibility of the conductor?

_____

2. Why does the conductor have the brakeman ride between the point car and the locomotive, when the locomotive is pushing one or more cars forward?

_____

3. From whom does the conductor normally receive his train orders?

_____

4. What should be done when you receive orders to move a specific car from a designated building and the car number does not correspond to the one given for movement? _____

_____

5. When the conductor relays a slow signal for catching a car and the engineman proceeds at the same speed, what should the conductor do?_____

_____

6. In the process of making up a train in the yards and a man was observed crawling through the cars, but after checking the man could not be located, what signal would be relayed by the engineman? _____

_____

FORM 10 (cont.)

7. When shall the conductor allow a train to proceed over any track where conditions or defects constitute a question of danger? _____

_____

8. If your locomotive was accidentally turned over and the Diesel engine was still running, what should be your first action? (Assuming you are not incapacitated) _____

_____

_____

9. When may a train obstruct passage of fire apparatus displaying red light to fire plug, road crossing or walks? _____

_____

10. What are conductor's responsibilities when cars are being coupled to train? _____

_____

_____

11. What is the conductor's responsibility when cars are left uncoupled from the locomotive or train? _____

_____

12. How shall the conductor reduce train speed, if necessary in approaching crossings, congested industrial areas, or hazardous locations? _____

_____

_____

_____

13. When shall conductor give train information to crew? _____

_____

_____

_____

14. Who is responsible to ensure unauthorized personnel do not ride on the train or locomotive?

_____

_____

15. What do the following switch stand target colors indicate:

Green with Green reflector? _____

_____

Red with Red reflector? _____

_____

_____

16. To whom are imperfectly displayed fixed signals reported? _____

_____

FORM 10 (cont.)

17. What is the indication of hand, flag and lamp, signals when used in the following manner?

(1) Swung at right angles to track? _____

_____

(2) Raised and lowered vertically? _____

_____

(3) Swung vertically in a circle at arms length? _____

_____

(4) Swung horizontally above the head when standing? _____

_____

(5) Held at arms length above head, when standing? _____

_____

(6) Any object waved violently by anyone on or near the track?

_____

_____

_____

(7) Slight horizontal movement at arm's length at right angles to the track? _____

_____

_____

18. Using an "O" for short sounds and (-) for longer sounds, use engine whistle signals for the following indications:

INDICATION

Apply brakes, stop _____

_____

_____

Proceed _____

_____

Flagman protect rear of train _____

_____

Forward trainman protect ahead _____

_____

Train has parted _____

_____

Acknowledge signal given _____

_____

When standing back _____

_____

Call for signals _____

_____

Approaching public crossing _____

_____

Clearance to go through while work crew is working tracks _____

_____

FORM 10 (cont.)

Obey Color Signals

INDICATION
Stop _____
_____
_____
Proceed at reduced speed, and for other uses prescribed by the rules _____
_____

A _____ signal will be used to stop a train at the flag stations indicated on its schedule or in special instructions.
Working under or about an engine, car or train, when thus protected it must not be coupled to or moved. Each class of workmen will display the _____signals.

19. When the headlight fails, what must be used in place of it? _____
_____

20. May the conductor remove a blue flag? _____

21. What does a train air brake test consist of? _____

22. When shall an air brake test be made? _____
_____

23. What is the purpose of the emergency brake valve in the caboose? _____
_____

24. What is correct method of using the emergency brake valve? _____
_____

25. In an emergency how can air brakes be applied to a train other than from brake valves in the locomotive or caboose? _____
_____

26. In the event of an accident or injury to personnel, what action will be taken? _____
_____

27. What is proper procedure when rolling cars by? _____
_____

FORM 11

WRITTEN TEST FOR <u>ENGINEMAN</u>
RAILROAD EQUIPMENT OPERATOR LICENSE
(LOCOMOTIVE)

NAME _____ Date of Test _____

FOR USE OF EXAMINER ONLY		
Results	Special Remarks (if any)	Signature of Examiner

1. In the operation of a train who is in charge? _____
_____

2. Who is responsible for safe movement of their trains? _____
_____
_____
_____

3. Who is responsible for the cleanliness of the locomotive? _____
_____
_____
_____

4. What precaution should be taken when refueling locomotive? _____
_____
_____
_____

5. When shall locomotive bell be sounded? _____
_____
_____
_____

6. What are the four positions of the automatic brake valve? _____
_____
_____
_____

7. When is holding/lap position used? _____
_____

8. When should emergency position be used? _____
_____

FORM 11 (cont.)

9. What is the function of the independent air valve? _____

_____

_____

10. What is the normal air pressure readings on air gauges at engineers control station? _____

_____

_____

11. What happens to a train operating under normal conditions if brake pipe or equalizing pressures drop below 70 lbs.? _____

_____

12. What causes the brake pipe or equalizing pressures to drop, as referenced in above question?

_____

_____

13. How can air brakes be applied to a train other than from the brake control valve in the locomotive? _____

_____

14. When is automatic air used in the operation of the locomotive? _____

_____

_____

15. When and why is the main air reservoir drained? _____

_____

_____

16. Why is excessive use of the locomotive air brake to control train speed prohibited?

_____

_____

17. There are (8) valves and/or levers that are normally used by the engineer when working his locomotive, what are they? _____

_____

18. Of the following, what is the most prevalent reason for brakes sticking?

(1) Partially or fully applied hand brake.
(2) Excessive brake pipe leakage.
(3) Overcharged brake system.
(4) Brake rigging that binds or fouls.
(5) A defective control valve.

FORM 11 (cont.)

19. What can the engineman do to correct the problem caused by improper handling of the automatic brake valve? _____

_____

20. What is done before moving a spotted car that has been placed in air brake emergency? ____

_____

_____

21. What are the four essential operational systems of the diesel electric locomotive? _____

_____

_____

22. Under what conditions should the sander be used? _____

_____

23. What will happen if sand is applied to the rails while the wheels are slipping? _____

_____

_____

24. What are the two most important duties of the train crew while the locomotive is in operation? _____

_____

25. What may result from improper handling of throttle or reversing lever? _____

_____

_____

26. What instrument tells how much current the traction motors are utilizing? _____

_____

_____

27. What are the main causes of electrical equipment failures in locomotives? _____

_____

_____

28. What should be done when load or ampere meter fluctuates erratically? _____

_____

_____

29. If your locomotive was accidentally turned over and the Diesel engine was still running, what should be your first action? (Assuming you are not incapacitated) _____

_____

30. What is the procedure for reversing the locomotive? _____

_____

FORM 11 (cont.)

31. When shall a locomotive be stopped by reversing the traction motors?_____

_____

_____

32. What is the indication of hand, flag and lamp, signals when used in the following manner?

(a) Swung at right angles to track. _____

_____

(b) Raised and lowered vertically. _____

_____

(c) Swing vertically in a circle at half-arms length. _____

_____

(d) Swung horizontally above the head when standing. _____

_____

(e) Held at arm length above head, when standing. _____

_____

(f) Any object waved violently by anyone on or near the track. _____

_____

_____

_____

_____

(g) Slight horizontal movement at arm's length at right angles to the track._____

_____

_____

INTENTIONALLY LEFT BLANK

P-301 INDEX

SECTION/ PARAGRAPH	TOPIC	PAGE
Para. 7.c.	72 Month Inspections	5-7
Para. 6.2.b.	Additional Considerations (Traffic control/highway grade crossing)	6-2
Para. 6.1.b.	Additional Considerations Affecting Speed	6-1
Para. 5.4.f.	Air Brake Filters, Annual Locomotive Maintenance	5-3
Para. 5.3.k.	Air Brake System, Quarterly Locomotive Maintenance	5-2
Para. 5.4.k.	Air Brake System Control Valves, Annual Locomotive Maintenance	5-3
Para. 2.2.n.	Air Brake Systems, Railroad Components	2-7
Para. 5.5.a.	Air Brake Systems, Bi-ennial Locomotive Maintenance	5-4
Para. 2.2n(1)	Air Brake Systems, Typical Components	2-7
Para. 2.2n(2)	Air Brake Systems, Functioning of	2-8
Para. 5.4.l.	Air Compressor	5-3
Para. 5.3.i.	Air Gauges	5-2
Para. 5.3.a.	Air Hoses	5-1
Para. 7.a.	Annual Inspections	5-7
Para. 5.4.	Annual Locomotive Maintenance - Maintenance Department	5-3
Para. 5.4.g.	Axle Bearings - Plain Journal	5-3
Para. 5.4.h.	Axle Bearings - Roller	5-3
Para. 6.5.a.	Background (Commercial railroad access)	6-5
Para. 7.2.a.	Background (Trains hauling ammunition and explosives)	7-1
Para. 3.1.d.	Barricade Operations	3-2
Para. 3.1.	Basic Skills	3-1
Para. 5.3.b.	Battery	5-1
Para. 5.5.	Bi-ennnial Locomotive Maintenance (every 2 years)	5-4
Para. 2.2.d.	Body Bolsters and Body Side Bearings	2-2
Para. 2.1.a.	Boxcars	2-1
Para. 5.3.m.	Brake Linkage	5-2
Para. 5.3.l.	Brake Shoes	5-2
Para. 4.1.c.	Braker/Switcher	4-2
Para. 2.2.l.	Car Brake Systems	2-4
Para. 4.b.	Car Movers	2-18
Para. 2.1	Car Types	2-1
Para. 3.3.j.	Cars Laden with Explosive Material	3-33
Para. 5.4.b.	Center Plates and Bearings	5-3
Para. 2.2.a.	Center Sill and Stub Sill	2-2
Para. 2.2.h.	Center Sill Cover Plates	2-4
Para. 5.3.f.	Charging Generator	5-2
Para. 3.1.f(5)	Chocking (Also see page 3-31)	3-9
Para. 6.5.	Commercial Access to Station	6-5
Para. 1.1.d.	Commercial and Government Railroad Related Organizations	1-3
Para. 4.1.b.	Conductor Duties	4-1
Para. 2.2.e.	Coupler	2-2
Para. 5.4.m.	Couplers	5-3

P-301 INDEX

SECTION/ PARAGRAPH	TOPIC	PAGE
Para. 3.1.f(1)	Coupling and uncoupling procedures	3-7
Para. 4.a.	Cranes (Railroad)	2-18
Para. 7.1.	Crew Licensing	7-1
Para. 8.	Crew Size	3-46
Para. 2.2.c.	Cross Bearers and Cross Ties	2-2
Para. 6.2.a.	Crossing Considerations	6-1
Para. 6.2.	Crossing Factors	6-1
Para. 5.2.	Daily Locomotive Maintenance- Maintenance Department	5-1
Para. 3.3.o.	Deadman Controls	3-34
Para. 7.f.	Decontamination	5-9
Para. 3.	Definitions Relevant to Navy Rail Operations	1-4
Para. 3.1.f(7)	Derailer procedures	3-11
Para. 3.3.m.	Derailments and Other Incidents	3-33
Para. 2.2.j.	Diagonal Brace	2-4
Para. 4.1.d.	Dispatcher/Yardmaster Duties	4-3
Para. 7.	Dispatching	3-46
Para. 2.2.f.	Draft Gear and Draft Gear Pocket	2-4
Para. 5.3.c.	Drive Belts	5-1
Para. 1.1e	Drug and Alcohol Testing	1-4
Para. 5.3.h.	Electrical Brushes	5-2
Para. 5.3.e.	Electrical Relays, Contacts and Contactors	5-1
Para. 5.c.	Emergency Braking	3-41
Para. 6.d.	Emergency Transmissions	3-46
Para. 2.2.b.	End Sills and Body Side Sills	2-2
Para. 5.4.d.	Engine Cooling Tank	5-3
Para. 5.3.d.	Engines	5-1
Sect. 2.	Equipment Descriptions	2-1
Para. 5.3.s.	Event Recorders	5-2
Para. 7.e.	Exercise of Journal Bearings	5-8
Para. 5.g.	Extreme Emergencies	3-42
Para. 3.3.f.	Flagging Protection	3-30
Para. 2.1.c.	Flatcars	2-2
Para. 2.2.i.	Floor Stringers	2-4
Para. 5.4.e.	Fuel Oil Tank	5-3
Para. 5.4.j.	Gears	5-3
Para. 5.1.	General Maintenance Requirements	5-1
Para. 6.a.	General Radio Procedures	3-43
Para. 3.1.a.	General Operational Practices and Procedures	3-1
Para. 2.1.e.	Gondola Cars	2-2
Para. 3.3.p.	Guidelines for Handling Trespassers or Demonstrators	3-34
Sec. 7.	Guidelines for Licensing	7-1
Sec. 6.	Guidelines for Local Determinations	6-1

P-301 INDEX

SECTION/ PARAGRAPH	TOPIC	PAGE
Para. 2.2.m.	Hand Brake Systems	2-7
Para. 3.3.n.	Handling Cars with Defects	3-34
Para. 3.3.l.	Handling of Suspect Cars	3-33
Para. 3.3.k.	Handling Special Equipment	3-33
Para. 8.4.	Hazard Notification System	8-4
Para. 9.	Hazardous Material	3-46
Para. 9.b.	Hazardous Material Derailment Issues.	3-46
Para. 9.c.	Hazardous Material Emergency Response	3-47
Para. 9.a.	Hazardous Material Prevention	3-46
Para. 6.c.	HERO Considerations	3-46
Para. 2.1.d.	Hopper Cars	2-2
Para. 5.3.o.	Horn and Bell	5-2
Para. 4.c.	Hy-Rails	2-18
Para. 5.d.	Independent Braking	3-41
Para. 3.2.c.	Initial Terminal Air Test	3-18
Para. 3.2.	Inspections During Operations	3-12
Para. 3.2.d.	Intermediate Train Air Test.	3-18
Para. 2.1.f.	Intermodal Container Cars	2-2
Para. 4.1.	Job Descriptions	4-1
Para. 7.2.b.	License Requirements for Personnel Handling A&E	7-1
Para. 5.3.n.	Lights	5-2
Para 8.3.	Local Railroad Operating Directive	8-2
Sect. 5.	Locomotive and Railcar Maintenance	5-1
Para. 4.a.	Locomotive Brake Setup for Multiple Unit (MU) Operation	3-35
Para. 4.b.	Locomotive Engine Brake Tests for One Unit or MUs	3-35
Para. 4.1.a.	Locomotive Engineer Duties	4-1
Para. 3.2.a.	Locomotive Inspection and Setup	3-12
Para. 6.	Locomotive Maintenance - General Requirements	5-4
Para. 3.b.	Locomotive Propulsion and Braking Systems	2-13
Para. 3.1.b.	Locomotive Safety	3-2
Para. 3.a.	Locomotive Types	2-12
Para. 5.5.b.	Main Reservoir Air Tank	5-4
Para. 4.	Miscellaneous Equipment	2-18
Para. 3.1.e.	Mounting,Dismounting,Riding and Climbing on Railway Cars and Locomotives	3-3
Para. 3.	Navy Locomotives	2-12
Para. 1.1.b.	Navy Rail Operations	1-1
Para. 3.3.c.	Notification of Emergency Vehicle Movement	3-24
Para. 3.3.q.	Operation of Car Movers Hy-rails, Trackmobiles and Other Track Equipment	3-34
Sect. 3.	Operations, Practices, and Procedures	3-1
Para. 3.2.e.	Other Inspections	3-18

P-301 INDEX

SECTION/ PARAGRAPH	TOPIC	PAGE
Para. 4.d.	Other Rail Equipment	2-18
Para. 5.3.g.	Pedestal and Journal Box Wear Plates	5-2
Para. 1.1.c.	Pertinent Directives	1-2
Para. 3.1.c.	Pier Operations	3-2
Para. 4.	Pre-Departure Brake Tests	3-35
Para. 2.	Publication Update Documentation	1-4
	to Handle Ammunition and Explosives (A&E)	7-1
Para. 7.2.	Qualifications and Certification Requirements for Train Crews	
Para. 5.3.	Quarterly Locomotive Maintenance - Maintenance Department	5-1
Para. 6.	Radio Procedures	3-43
Para. 3.2.b.	Railcar and Consist Inspection	3-16
Para. 2.2.	Railcar Components	2-2
Para. 7.	Railcar Inspection and Maintenance - Maintenance Department	5-6
Para. 6.4.	Railcar Intermix	6-5
Para. 7.d.	Railcar Unscheduled Inspections	5-8
Para. 1.1.a	Railroad Operations and the Navy Mission	1-1
Para 1.1g.	Railroad Mishap Reporting	1-4
Sect. 8.	Railway Safety Requirements	8-1
Para. 4.1.e.	Railroad Supervisor	4-3
Para. 5.	Railroad Track	2-20
Para. 8.5.	Refresher Training	8-5
Para. 3.3g((4)	Roll-bys, use of	3-31
Para. 1.1.e.	Safety	1-3
Para. 5.3.j.	Safety Appliances (ladders, handholds, steps, etc.)	5-2
Para. 8.1	Safety Background	8-1
Para. 8-2	Safety Requirements	8-1
Para. 5.3.q.	Sanders	5-2
Para. 3.3.h.	Securing Equipment	3-32
Para. 5.b.	Service (Automatic or Train Line) Braking	3-39
Para. 5.4.c.	Side Bearings	5-3
Para. 3.3.e.	Signals (Locomotive bell, horn, whistle boards,etc.)	3-24
Sect. 4.	Skill Areas	4-1
Para. 5.3.r.	Spark Arrestors	5-2
Para. 6.1.a.	Speed Considerations	6-1
Para. 5.e.	Speed Control	3-42
Para. 6.1.	Speed Limit Factors	6-1
Para. 2.2.k.	Stack Pocket	2-4
Para. 8.6.	Standup Safety Briefings	8-5
Para. 5.a.	Starting a Train	3-39
Para. 3.3.g.	Switching and Spotting Cars	3-30
Para. 3.1.f.	Switching Operations	3-7
Para. 2.1.b.	Tank Cars	2-1

P-301 INDEX

SECTION/ PARAGRAPH	TOPIC	PAGE
Para. 6.3.	Time on Duty	6-5
Para. 3.2.f.	Track and Structures Inspections	3-18
Para. 5.a.	Track Components	2-20
Para. 5.b.	Track Geometry	2-22
Para. 3.3.d.	Track Out-of-Service Procedures	3-24
Para. 5.4.n.	Traction Motor Nose Suspension	5-4
Para. 5.4.o.	Traction Motor Support Bearing Lubricators	5-4
Para. 5.4.p.	Traction Motors and Traction Generators	5-4
Para. 3.3.b.	Train Crew Notices	3-23
Para. 5.	Train Handling	3-38
Para. 4.c.	Train Line Air Brake Test, Initial Terminal	3-38
Para. 4.d.	Train line Air Brake Test, Road or Intermediate Test	3-38
Para. 3.3.a.	Train Operational Methods	3-23
Para. 6.b.	Transmission of Train Orders by Radio	3-44
Para. 7.b.	Tri-ennial Inspections	5-7
Para. 2.2.g.	Trucks (description of)	2-4
Para. 5.4.i.	Trucks (inspection of)	5-3
Para. 2.2n(1)	Typical components of air brake systems	2-7
Para. 9.d.	Use of Placards	3-47
Para. 5.f.	Use of Sand	3-42
Para. 3.3.i.	Weighing of Cars	3-33
Para. 5.4.a.	Wheels	5-3
Para. 5.3.p.	Windshield Wipers	5-2

FIGURE NO.	TOPIC	PAGE
Figure 2-14	26L air brake control equipment	2-17
Figure 2-16	26-L brake system related devices	2-18
Figure 2-15	AAR-105 control stand	2-17
Figure 2-10	AB type service brake valves	2-11
Figure 2-2	Basic railcar components	2-2
Figure 2-20	Basic switch components/switch stand assembly	2-21
Figure 2-19	Basic track components	2-20
Figure 2-12	Center-cab locomotive	2-14
Figure 2-4A	Coupler components	2-4
Figure 2-4B	Coupler components, continued	2-5
Figure 2-5	Coupler types	2-6
Figure 2-23	Cross-level measurement	2-23
Figure 3-3	Dismounting moving equipment	3-6
Figure 2-11	End-cab locomotive	2-14
Figure 3-13	Engine whistle signals	3-28

P-301 INDEX

SECTION/ PARAGRAPH	TOPIC	PAGE
Figure 2-6	Example of a draft gear system	2-7
Figure A-22	Example of a bolster gib and side frame wear plate	A-24
Figure 2-17	Example of a car mover	2-19
Figure A-27	Example of a coupler shank and head	A-31
Figure 2-18	Example of a hy-rail vehicle	2-19
Figure A-3	Example of a journal bearing wedge	A-6
Figure A-19	Example of a snubbing device	A-22
Figure A-20	Example of a spring pack type snubbing device	A-22
Figure A-25	Example of a Type E coupler gauge	A-28
Figure A-26	Example of a Type F coupler gauge	A-29
Figure A-11	Example of a wheel defect, worn coupler limit, worn journal coupler and journal fillet gauge	A-14
Figure A-28	Example of acceptable yoke cracks	A-31
Figure A-2	Examples of a center hanger opening	A-3
Figure A-1	Examples of brake beam hangers	A-2
Figure 3-10	Examples of broken or damaged rails	3-21
Figure 3-5	Examples of defective air hose	3-13
Figure 3-9	Examples of defective ties	3-20
Figure 3-6	Examples of defective wheels	3-14
Figure 3-7	Examples of defective wheels	3-15
Figure 3-17	Examples of hazardous materials warning placards	3-50
Figure 3-11	Freight car harmonic rock and roll	3-22
Figure 2-22	Gauge measurements	2-23
Figure A-5	Gauging defective wheels	A-10
Figure 3-12	Hand and flag signals	3-25
Figure 3-8	Hazardous safety appliances	3-19
Figure A-4	Illustration and cross section of a bearing adapter	A-8
Figure 3-16	Illustration of draft and buff forces	3-42
Figure A-24	Illustration of repair welding of truck side frames	A-26
Figure A-21	Illustration of wear limit indicators of friction castings or elements	A-23
Figure 2-9	KC brake valve and reservoir.	2-10
Figure 3-1	Lifting methods	3-3
Figure 2-13	Location of apparatus, 65-ton diesel electric locomotive	2-15
Figure A-9	Method of gauging depth of witness groove in flange	A-13
Figure A-15	Method of gauging end collar thickness	A-16
Figure A-14	Method of gauging flag spots	A-16
Figure A-6	Method of gauging flange height	A-11
Figure A-10	Method of gauging location of witness groove in flange	A-13
Figure A-12	Method of gauging thin flanges	A-15
Figure A-13	Method of gauging vertical flanges	A-15
Figure A-7	Method of gauging vertical flanges	A-11
Figure A-8	Method of gauging worn flange wheel	A-12

P-301 INDEX

SECTION/ PARAGRAPH	TOPIC	PAGE
Figure A-23	Method of marking and mating cast steel truck side frames	A-25
Figure 3-2	Mounting moving equipment.	3-5
Figure A-17	Plain axle	A-18
Figure A-16	Plain axle journal	A-17
Figure 2-1	Railcar types	2-1
Figure A-18	Roller bearing age	A-19
Figure 6-1	Study positions for diagnostic team	6-2
Figure 3-15	Track derails	3-33
Figure 2-21	Track frog and guidelines	2-22
Figure 2-3	Truck components	2-3
Figure 6-2	Typical crossing signs	6-3
Figure 6-3	Typical placement of warning signs and pavement markings	6-3
Figure 6-4	Typical placement of warning signs at crossings with parallel roads	6-4
Figure 3-4	Unsafe areas between coupler head and draft gear	3-7
Figure 3-14A	Whistle board shape and dimensions.	3-29
Figure 3-14B	Whistle board specifications	3-30*

TABLE NO.	TITLE	PAGE
Table A-1	Plain axle journal wear limits	A-17
Table A-2	Plain axle wear limits	A-18
Table A-6	Recommended coupler heights	A-29
Table A-3	Roller bearing axle wear limits	A-19
Table A-4	Truck side frame and bolster gib wear limits.	A-24
Table A-5	Truck spring condemning height limits	A-27

FORM NO.	TITLE	PAGE
Form 5	Daily Locomotive Maintenance Report	B-6
Form 7	Diagnostic Team Crossing Evaluation Report	B-9
Form 4	Locomotive Except Report	B-5
Form 1	Locomotive Inspection Checklist	B-2
Form 8	NWS Seal Beach Highway/Railroad Crossing Information (Sample)	B-14
Form 2	Train Crew Notice	B-3
Form 3	Train Crew Notice Acknowledgment Sheet	B-4
Form 6	Railcar Deficiency Report	B-8
Form 9	Written Test for Brakeman Railroad Equipment Operator License	B-15
Form 10	Written Test for Conductor Railroad Equipment Operator License	B-18
Form 11	Written Test for Engineer Railroad Equipment Operator License	B-22

INTENTIONALLY LEFT BLANK